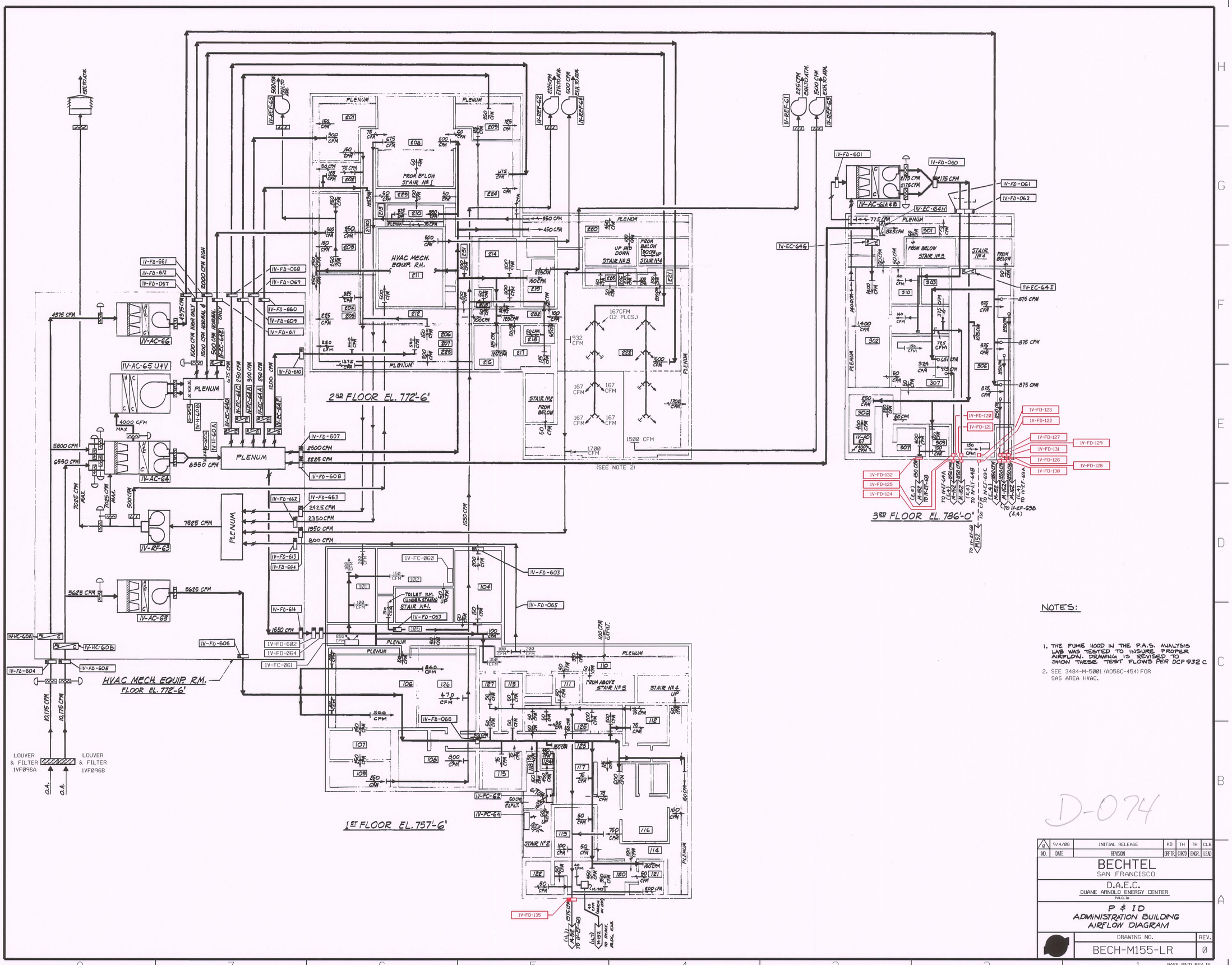

NOTES:

1. THE FUME HOOD IN THE P.A.S. ANALYSIS LAB WAS TESTED TO INSURE PROPER AIRFLOW. DRAWING IS REVISED TO SHOW THESE TEST FLOWS PER DCP 932 C
2. SEE 3484-M-5001 (A058C-454) FOR SAS AREA HVAC.

D-074

NO.	DATE	REVISION	DRFTR.	CHK'D	ENGR.	LEAD
Ø	9/4/88	INITIAL RELEASE	KB	TH	TH	CLB

BECHTEL
SAN FRANCISCO

D.A.E.C.
DUANE ARNOLD ENERGY CENTER
PALO, IA

P & ID
ADMINISTRATION BUILDING
AIRFLOW DIAGRAM

DRAWING NO. BECH-M155-LR
REV. Ø

BASE P&ID REV 15

LR NOTE:
1. THIS AIR FLOW DIAGRAM IS ONLY USED TO DEPICT FIRE DAMPERS SUBJECT TO AMR AND EVALUATED IN 13.01 FIRE PROTECTION. THE REMAINING ADMIN BUILDING VENTILATION COMPONENTS ARE NOT IN THE SCOPE OF LICENSE RENEWAL.

LR LEGEND:
- COMPONENTS IN SCOPE PER 10CFR54.4(a)(1) AND/OR (a)(3) AND SUBJECT TO AMR PER 54.21
- COMPONENTS NOT SUBJECT TO AMR
- COMPONENTS IN SCOPE PER 10CFR54.4(a)(2) AND SUBJECT TO AMR PER 54.21
- SYSTEM BOUNDARY INTERFACE
- 13.01 FIRE PROTECTION