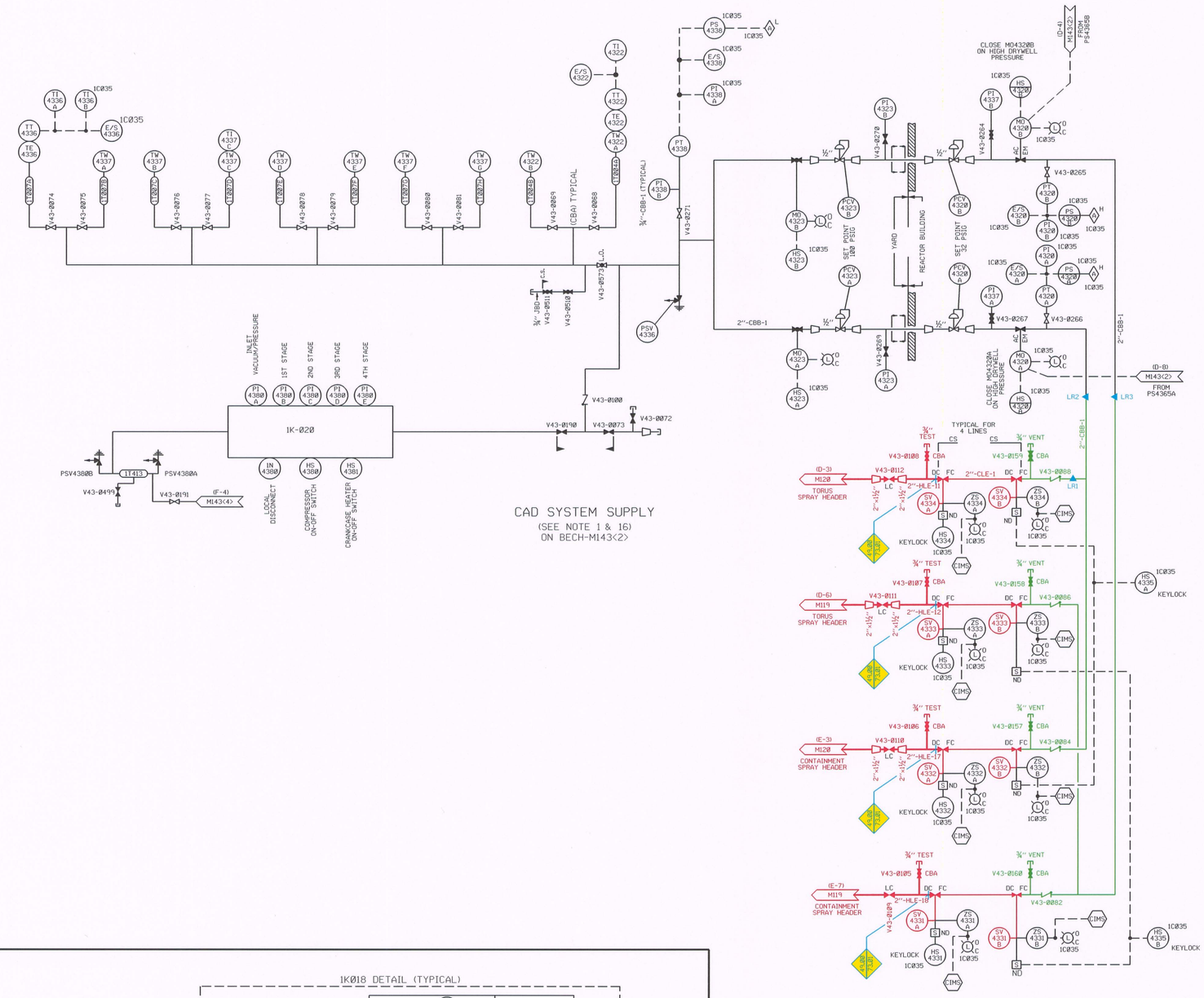

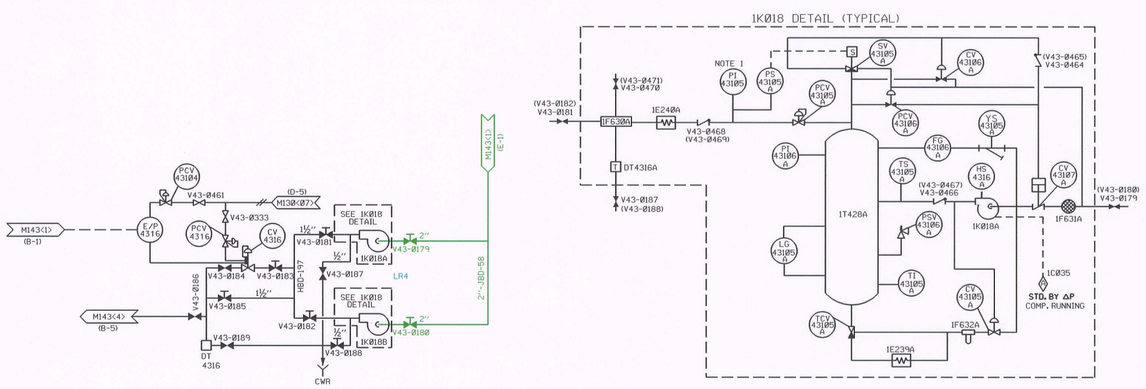

NOTE 1: P143105 IS ON THE A COMPRESSOR ONLY.

FOR 1K018B ALL A'S BECOME B'S AND VALVE NUMBERS ARE SHOWN IN PARENTHESIS.

D-062

NO.	DATE	REVISION	DRFTR.	CHK'D.	ENGR.	LEAD
Ø	9/16/08	INITIAL RELEASE	KB	JVS	TH	CLB

D.A.E.C.
DUANE ARNOLD ENERGY CENTER
PALO, IA

P. & I.D.
CONTAINMENT ATMOSPHERE CONTROL SYSTEM

DWG. NO. BECH-M143<3>-LR REV. Ø

BASE P&ID REV 23

LR NSAS ANCHOR NOTES:

- LR1 (D,2) SEISMIC ANCHOR CBB-1-SA-1 SEE CORRESPONDING FSK-04744B
- LR2 (E,2) SEISMIC ANCHOR CBB-1-PS-4 SEE CORRESPONDING FSK-04741B
- LR3 (E,2) SEISMIC ANCHOR CBB-1-PS-4 SEE CORRESPONDING FSK-04747B
- LR4 (A,7) 1K018A & B CONNECTIONS PROVIDE A SEISMIC ANCHOR FOR LINE JBD-58

LR LEGEND:

- COMPONENTS IN SCOPE PER 10CFR54.4(a)(1) AND/OR (a)(3) AND SUBJECT TO AMR PER 54.21
- COMPONENTS NOT SUBJECT TO AMR
- COMPONENTS IN SCOPE PER 10CFR54.4(a)(2) AND SUBJECT TO AMR PER 54.21
- SYSTEM BOUNDARY INTERFACE

49.Ø0 RESIDUAL HEAT REMOVAL
73.Ø1 ATMOSPHERE CONTROL