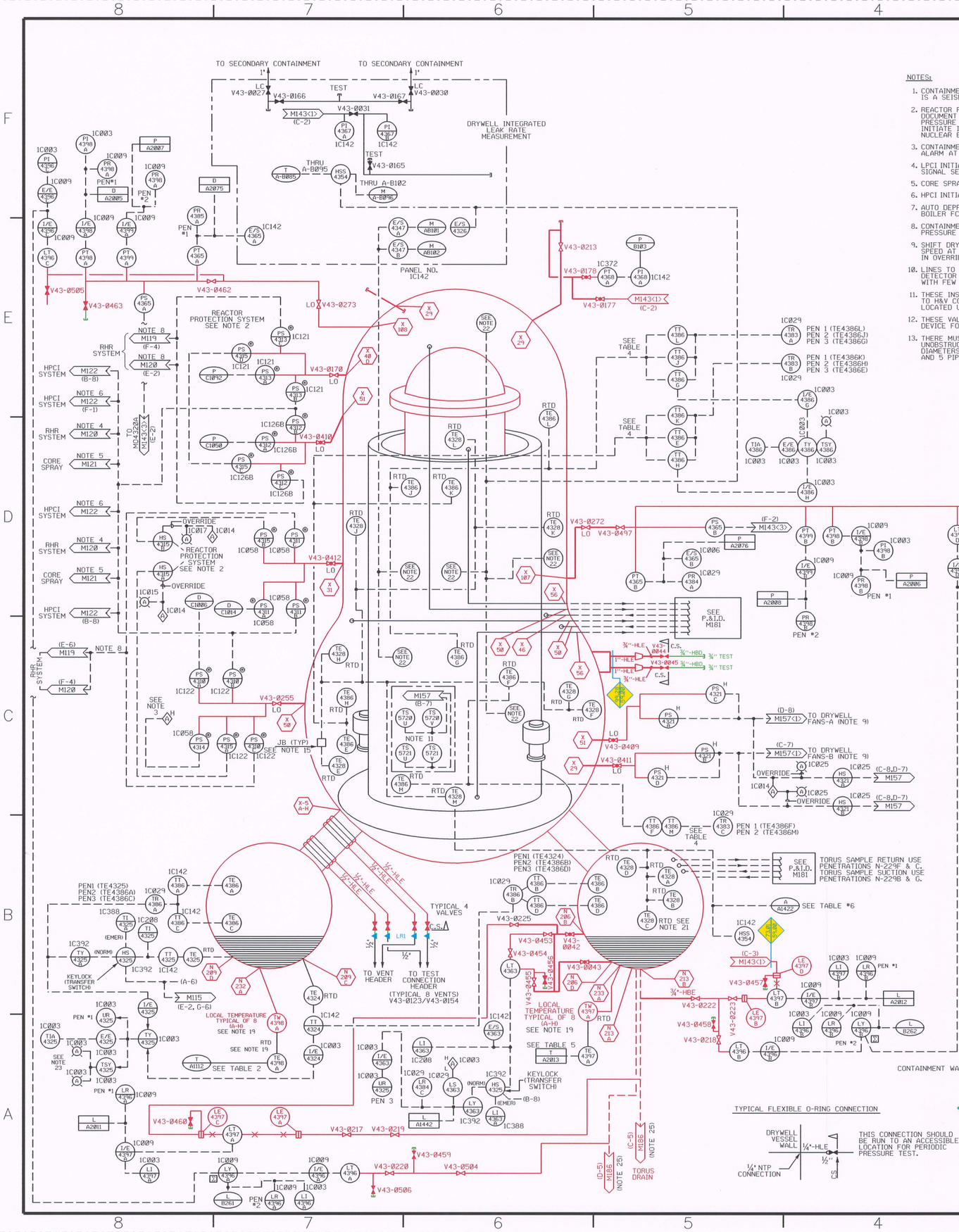

NOTES:

1. CONTAINMENT ATMOSPHERIC DILUTION SYSTEM IS A SEISMIC I DESIGN.
2. REACTOR PROTECTION SYSTEM IED-GE DOCUMENT NO.791E611 CONTAINMENT HIGH PRESSURE TRIP-THESE SWITCHES ALSO INITIATE ISOLATION FUNCTIONS ON THE NUCLEAR BOILED FCD-GE DOCUMENT 761E557.
3. CONTAINMENT HIGH PRESSURE APPROACH ALARM AT 1.5 PSIG.
4. LPCI INITIATION SIGNAL & RHR SELECTION SIGNAL SEE M120 NOTES 1&3.
5. CORE SPRAY INITIATION SEE M120 NOTE 1.
6. HPCI INITIATION SEE M122 NOTE 1.
7. AUTO DEPRESSURIZATION SYSTEM ON NUCLEAR BOILER FCD-GE DOCUMENT NO.761E557.
8. CONTAINMENT SPRAY PERMISSIVE DRYWELL PRESSURE NOT LOW.
9. SHIFT DRYWELL VENTILATION FANS TO LOW SPEED AT 2PSIG. UNLESS HS-4321A/B IS/ARE IN OVERRIDE
10. LINES TO DRYWELL ATMOSPHERE RADIOACTIVITY DETECTOR MUST BE AS SHORT AS POSSIBLE, WITH FEW BENDS AND STAINLESS STEEL.
11. THESE INSTRUMENTS CONTROL COOLING WATER TO H&V COOLERS. THE INSTRUMENTS ARE LOCATED UNDER THE REACTOR VESSEL.
12. THESE VALVES ARE EQUIPPED WITH A MANUAL DEVICE FOR OPENING.
13. THERE MUST BE, AS A MINIMUM, A STRAIGHT UNOBSTRUCTED RUN OF AT LEAST 15 PIPE DIAMETERS UPSTREAM OF THE FLOW ELEMENT AND 5 PIPE DIAMETERS DOWN STREAM.
14. THIS SECTION OF LINE MUST INCLUDE A STRAIGHT RUN OF PIPE SUFFICIENT FOR THE ACCURATE OPERATION OF A FLOW-METER ie, AT LEAST 25 DIAMETERS LONG.
15. A JUNCTION BOX WITH 15 FT OF COILED CABLING IS PROVIDED FOR EACH TEMPERATURE AND MOISTURE ELEMENT LOCATED IN THE CONTAINMENT.
16. ALL INSTRUMENT LINES ARE STAINLESS STEEL.
17. VALVES CV4300, CV4301, CV4302, CV4303, CV4306, CV4307 AND CV4308 PRESENTLY LIMITED TO 30° TRAVEL FROM THE CLOSED POSITION.
18. CHECK VALVE V43-0172 INTERNALS HAVE BEEN REMOVED.
19. THERE ARE 8 THERMOWELLS AND 8 ASSOCIATED RTD'S PER DIVISION FOR LOCATIONS SEE DRAWING M43 AND C3271.
20. DEBRIS SCREEN REQUIRED ON DRYWELL SIDE OF PENETRATION X-25 AND X-26.
21. RTD'S IN TORUS NOT UNDERWATER.
22. ILRT DEW CELL CLASSIFIED AS TEST EQUIPMENT.
23. LIGHT INDICATES NOT ALL INPUTS BEING AVERAGED.
24. HS-4356A/B OVERRIDE ALL GROUP 3 ISOLATION SIGNALS. THEY ARE LOCATED ON 1C015/17 AND ALARM ON 1C014 USE AS DIRECTED BY EOPS. SEE APED-A71-003.
25. TORUS DRAIN AND SUCTION LINES SHOWN ON BECH-M186.

TABLE 1

COMPUTER POINT FOR PRIMARY CONTAINMENT PRESSURE SWITCHES

SWITCH	POINT
4310A	C-B506
4310B	C-B507
4310C	C-B512
4311A	C-B514
4311B	C-B521
4311C	C-B546
4312A	C-B550
4312B	C-B576
4312C	C-B591
4313A	C-B592
4313B	C-B593
4313C	C-B594
4315A	C-D512
4315B	C-D513
4315C	C-D514
4315D	C-D515

TABLE 2

TORUS WATER TEMPERATURE

TE4398B A1113
TE4398C A1435
TE4398D A1436
TE4398E A1443
TE4398F A1444
TE4398G A1445
TE4398H A1446

TABLE 3

ELECTRICAL PENETRATION TEST CONNECTIONS

PENETRATION	PI	V43-	COMMON HEADER
104A	43104A	0482	A
104B	43104B	0483	A
100F	43100F	0484	A
100E	43100E	0485	A
103	43103	0486	A
100G	43100G	0487	A
100C	43100C	0489	B
100B	43100B	0490	B
104D	43104D	0491	B
104C	43104C	0492	B
101A	43101A	0474	C
105B	43108B	0475	C
106A	43108A	0476	C
101C	43101C	0478	D
105D	43105D	0460	D
106C	43106C	0479	D
N230B	43109	0493	NONE

TABLE 4

SPDS I.D. POINTS FOR DRYWELL TEMPERATURE RTD'S

RTD	POINT
TT4386E	A2057
TT4386F	A2058
TT4386G	A2059
TT4386H	A2060
TT4386J	A2061
TT4386K	A2062
TT4386L	A2063
TT4386M	A2064

TABLE 5

SPDS I.D. POINTS FOR TORUS WATER TEMPERATURE

RTD	POINT
TE4397A	A2013
TE4397B	A2014
TE4397C	A2015
TE4397D	A2016
TE4397E	A2017
TE4397F	A2018
TE4397G	A2019
TE4397H	A2020

TABLE 6

TORUS/DRYWELL AIR TEMPERATURE

TE4328B	A1423	DECK 2
TE4328C	A1424	DECK 3
TE4328D	A1425	DECK 4
TE4328E	A1426	DECK 5
TE4328F	A1427	DECK 6
TE4328G	A1428	DECK 7
TE4328H	A1429	DECK 8
TE4328J	A1430	DECK 9
TE4328K	A1431	DECK 10
TE4328L	A1432	DECK 11
TE4328M	A1433	DECK 12

TABLE 7

COMMON HEADER ISOLATION VALVES

HEADER	V43-
A	0488
B	0473
C	0472
D	0481

LR NSAS ANCHOR NOTES:

- LR1 SEISMIC ANCHOR FOR VENT BELLOWS X5B & X5D TEST CONNECTION AND VENT HEADER LINES SEE CORRESPONDING FSK-B4765B
- LR2 SEISMIC ANCHOR FOR VENT BELLOWS X5A & X5C TEST CONNECTION AND VENT HEADER LINES SEE CORRESPONDING FSK-B4760B
- LR3 SEISMIC ANCHOR FOR VENT BELLOWS X5E & X5G TEST CONNECTION AND VENT HEADER LINES SEE CORRESPONDING FSK-B4770B
- LR4 SEISMIC ANCHOR FOR VENT BELLOWS X5F & X5H TEST CONNECTION AND VENT HEADER LINES SEE CORRESPONDING FSK-B4775B

LR NOTES:

1. ALL EXPOSED DRAIN PIPING AND FUNNELS ARE IN SCOPE FOR LICENSE RENEWAL.
2. X/B AND X/BV ARE CONTAINMENT PENETRATIONS THAT ARE EVALUATED IN 99.28PC.
3. ELECTRICAL PENETRATION NITROGEN SUPPLY LINE IS ¼" FLEXIBLE TUBING NOT REQUIRING SEISMIC RESTRAINT.

LR LEGEND:

- COMPONENTS IN SCOPE PER 10CFR54.4(a)(1) AND/OR (a)(3) AND SUBJECT TO AMR PER 54.21
- COMPONENTS NOT SUBJECT TO AMR
- COMPONENTS IN SCOPE PER 10CFR54.4(a)(2) AND SUBJECT TO AMR PER 54.21

SYSTEM BOUNDARY INTERFACE

59.00 PRIMARY CONTAINMENT
73.01 CONTAINMENT AND ATMOSPHERE CONTROL

D-061

NO.	DATE	REVISION	DRFTR	CHK'D	ENGR	LEAD
0	9/16/08	INITIAL RELEASE	KB	JVS	TH	CLB

D.A.E.C.
DUANE ARNOLD ENERGY CENTER
P&ID, IA

P.&I.D.
CONTAINMENT ATMOSPHERE CONTROL SYSTEM

DWG. NO. BECH-M143<2>-LR REV. 0

BASE P&ID REV 23