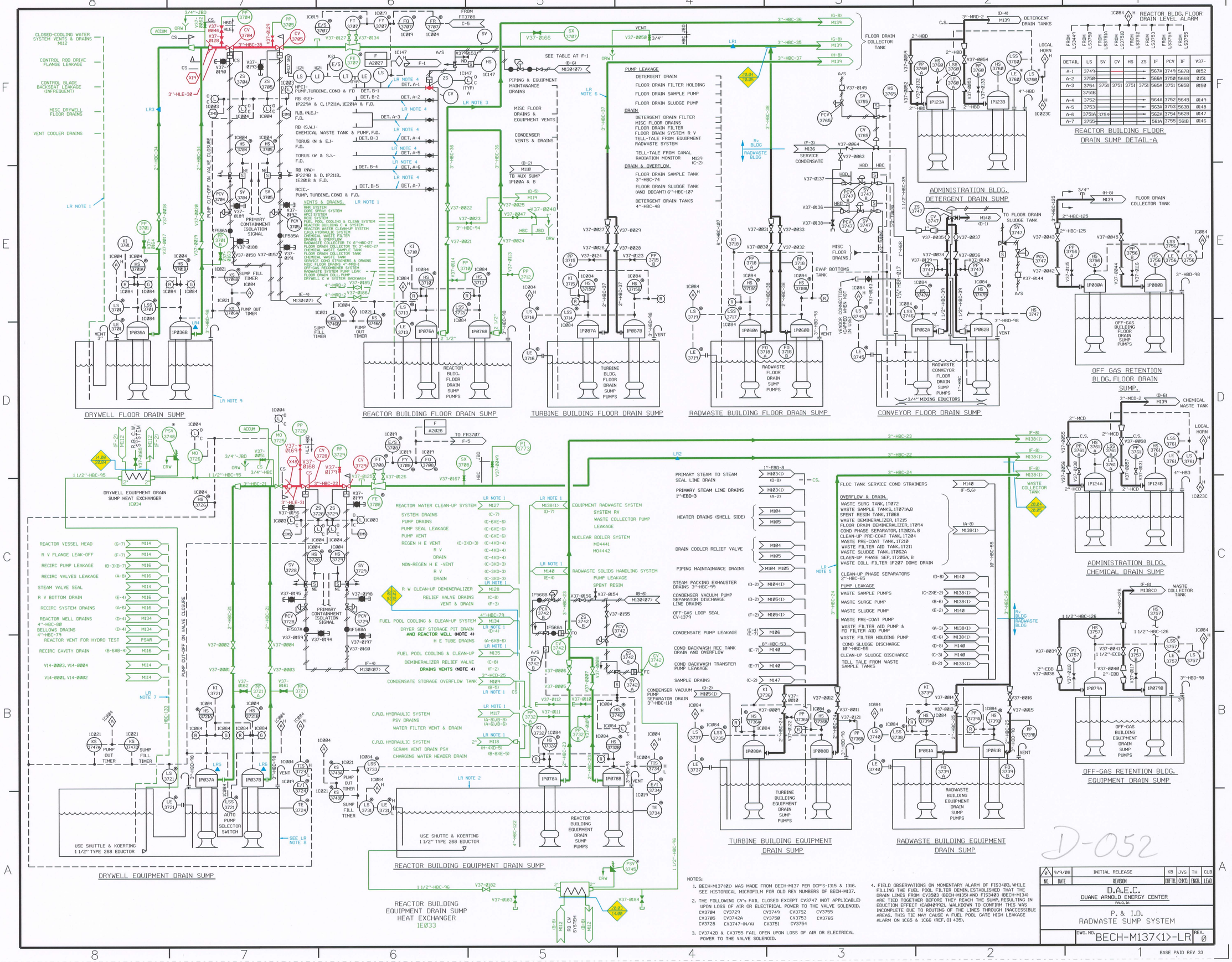

LR NSAS ANCHOR NOTES:

- ▲LR1 SEISMIC SUPPORT IS PROVIDED BY SEISMIC ANCHOR HBC-035-SA-78 PER ISO-HBC-035-04.
- ▲LR2 SEISMIC SUPPORT IS PROVIDED BY SEISMIC ANCHOR HBC-022-SA-36 PER ISO-HBC-022-03.
- ▲LR3 SEISMIC SUPPORT IS PROVIDED BY SEISMIC ANCHOR PS-2 AND DET.B PER FSK-35298.
- ▲LR4 SEISMIC SUPPORT IS PROVIDED BY PUMP 1P036B PER FSK-35298.
- ▲LR5 SEISMIC SUPPORT IS PROVIDED BY PUMP 1P037A PER FSK-035308.
- ▲LR6 SEISMIC SUPPORT IS PROVIDED BY PUMP 1P037B PER FSK-035308.

LR NOTES:

1. THE DRAIN AND VENT LINES SHOWN GOING INTO THE REACTOR BUILDING FLOOR DRAIN SUMP AND THE REACTOR BUILDING EQUIPMENT SUMP ARE SHOWN IN-SCOPE ON THIS BOUNDARY DRAWING BUT THE PIPE IS EVALUATED ON THE BOUNDARY DRAWING WHERE THE EQUIPMENT IS SHOWN TO VENT OR DRAIN INTO DRW OR CRW.
2. ONLY THE EXPOSED PORTION OF PIPING ABOVE THE SUMP COVER IS IN-SCOPE. THE 3"-HBD-98 IS NOT WATER FILLED SO THEREFORE PIPING IS NOT IN-SCOPE FOR CRITERION (a)(2).
3. CV 3749 IS IN-SCOPE FOR LICENSE RENEWAL PER CRITERIA (a)(3).
4. PIPING IS DRAIN PIPING THAT IS EMBEDDED AND VALVES ARE IN A TROFT BELOW FLOOR ELEVATION THEREFORE THESE COMPONENTS DO NOT HAVE A SPATIAL INTERACTION WITH SAFETY RELATED COMPONENTS.
5. THE 3"-HBC-24 PIPING OUTSIDE OF THE TURBINE BLDG DRAIN SUMP ROOM IS IN-SCOPE.
6. THE 3"-HBC-37 PIPING OUTSIDE OF THE TURBINE BLDG DRAIN SUMP ROOM IS IN-SCOPE.
7. THE DRAIN AND VENT LINES SHOWN GOING INTO THE DRYWELL FLOOR DRAIN SUMP AND DRYWELL EQUIPMENT DRAIN SUMP ARE SHOWN IN-SCOPE ON THIS BOUNDARY DRAWING, BUT THE PIPE IS EVALUATED ON THE BOUNDARY DRAWING WHERE THE EQUIPMENT IS SHOWN TO VENT OR DRAIN INTO THE DRW OR CRW.
8. ONLY THE EXPOSED PORTION OF PUMPS AND PIPING ABOVE THE SUMP COVER IS IN-SCOPE. THE 3" VENT PIPE AND 3"-HBD-98 PIPING IS NOT WATER FILLED AND NOT IN-SCOPE FOR CRITERIA (a)(2).
9. EXPOSED DRAIN PIPING IS IN-SCOPE FOR LICENSE RENEWAL BECAUSE IT AFFECTS SAFETY RELATED EQUIPMENT.

LR LEGEND:

- COMPONENTS IN SCOPE PER 10CFR54.4(a)(1) AND/OR (a)(3) AND SUBJECT TO AMR PER 54.21
- COMPONENTS NOT SUBJECT TO AMR
- COMPONENTS IN SCOPE PER 10CFR54.4(a)(2) AND SUBJECT TO AMR PER 54.21

SYSTEM BOUNDARY INTERFACE

14.00	Rx BLDG CCW
20.03	Rx BLDG SUMPS
20.04	DRYWELL SUMPS
20.05	RADWASTE BLDG SUMPS
35.00	FUEL POOL COOLING AND CLEAN-UP

NOTES:

1. BECH-M137<01> WAS MADE FROM BECH-M137 PER DCP'S-1315 & 1316. SEE HISTORICAL MICROFILM FOR OLD REV NUMBERS OF BECH-M137.
2. THE FOLLOWING CV's FAIL CLOSED EXCEPT CV3747 (NOT APPLICABLE) UPON LOSS OF AIR OR ELECTRICAL POWER TO THE VALVE SOLENOID.

CV3704	CV3729	CV3749	CV3752	CV3755
CV3705	CV3742A	CV3750	CV3753	CV3765
CV3728	CV3747-(N/A)	CV3751	CV3754	

3. CV3742B & CV3755 FAIL OPEN UPON LOSS OF AIR OR ELECTRICAL POWER TO THE VALVE SOLENOID.
4. FIELD OBSERVATIONS ON MOMENTARY ALARM OF FIS3403, WHILE FILLING THE FUEL POOL FILTER (BEMIN.ESTABLISHED THAT THE DRAIN LINES FROM CV3503 (BECH-M135) AND FIS3403 (BECH-M134) ARE TIED TOGETHER BEFORE THEY REACH THE SUMP, RESULTING IN EDUCTION EFFECT (CA04895Z). WALKDOWN TO CONFIRM THIS WAS INCOMPLETE DUE TO ROUTING OF THE LINES THROUGH INACCESSIBLE AREAS. THIS TIE MAY CAUSE A FUEL POOL GATE HIGH LEAKAGE ALARM ON 1C65 & 1C66 (REF. D1 435).

NO.	DATE	REVISION	DRFTR.	CHKD.	ENGR.	LEAD
A	9/9/08	INITIAL RELEASE	KB	JVS	TH	CLB

D.A.E.C.
DUANE ARNOLD ENERGY CENTER
PALO, IA

P. & I.D.
RADWASTE SUMP SYSTEM

DWG. NO. BECH-M137<1>-LR REV. 0

BASE P&ID REV 33