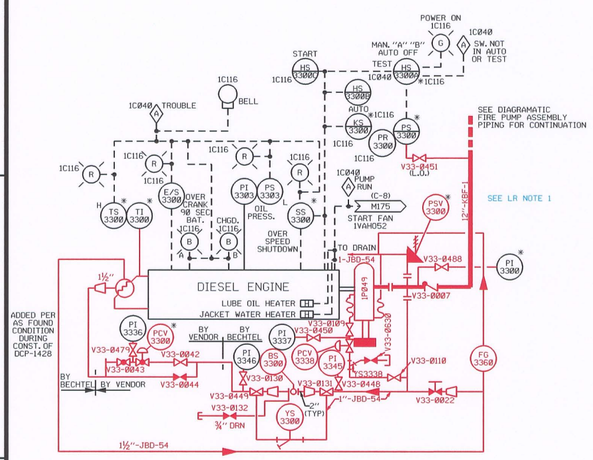

DIESEL FIRE PUMP DETAIL

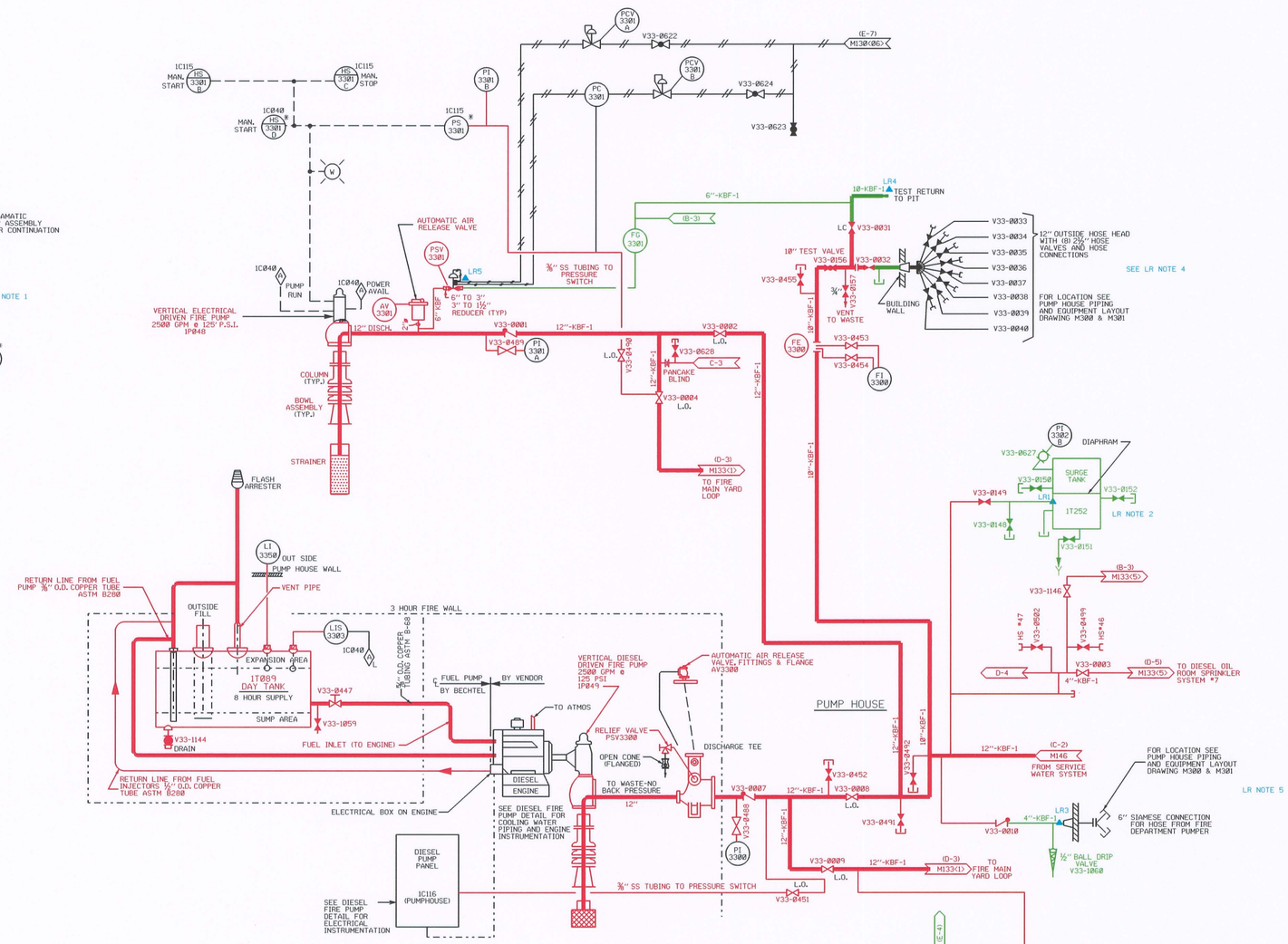

DIAGRAMMATIC FIRE PUMP ASSEMBLY PIPING

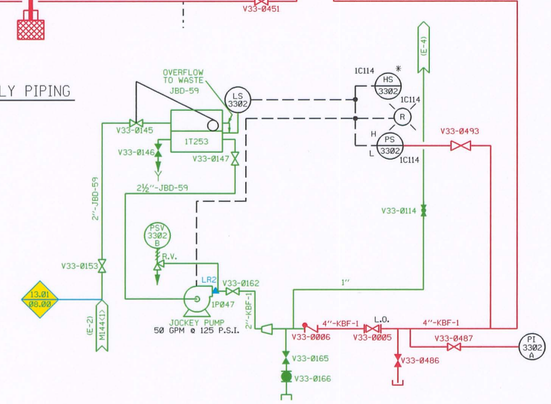

D-045

LR NSAS ANCHOR NOTES:

- LR1 SEISMIC SUPPORT IS PROVIDED BY 1T252 PER FSK-10178
- LR2 SEISMIC SUPPORT IS PROVIDED BY IP047 PER FSK-10178
- LR3 NO SEISMIC SUPPORT EXISTS PER ISO-KBF-001-19H
- LR4 NO SEISMIC SUPPORT EXISTS PER ISO-KBF-001-20
- LR5 NO SEISMIC SUPPORT EXISTS PER FSK-01441B

LR NOTES:

1. IP049 IS LOCATED IN AN AREA WITH NO SAFETY RELATED EQUIPMENT
2. 1T252 IS PERMANANTLY ISOLATED FROM SYSTEM BUT IS AVAILABLE IF NEEDED TO ASSIST IP047 (SEE NOTE). AREA ABOVE DIAPHRAM IS AIR FILLED AND BELOW DIAPHRAM IS LIQUID FILLED.
3. ALL EXPOSED DRAIN PIPING AND FUNNELS ARE IN SCOPE FOR LICENSE RENEWAL.
4. HOSE CONNECTIONS AND ISOLATIONS V33-0033 THROUGH V33-0040 ARE USED FOR TESTING AND DO NOT SUPPORT 10CFR50.48. THEY ARE LOCATED OUTSIDE THE PUMPHOUSE AND DO NOT AFFECT SAFETY RELATED EQUIPMENT.
5. THE 6" SIAMESE FIRE DEPARTMENT PUMPER CONNECTION DOES NOT SUPPORT 10CFR50.48 AND IS LOCATED OUTSIDE OF THE PUMPHOUSE NOT AFFECTING SAFETY RELATED EQUIPMENT.

LR LEGEND:

- COMPONENTS IN SCOPE PER 10CFR54.4(a)(1) AND/OR (a)(3) AND SUBJECT TO AMR PER 54.21
- COMPONENTS NOT SUBJECT TO AMR
- COMPONENTS IN SCOPE PER 10CFR54.4(a)(2) AND SUBJECT TO AMR PER 54.21
- SYSTEM BOUNDARY INTERFACE
  - 00.00 FIRE PROTECTION
  - 13.01 WELL WATER

NO.	DATE	REVISION	DRFTR.	CHKD.	ENGR.	LEAD
0	9/9/08	INITIAL RELEASE	KB	MF	TH	CLB

D.A.E.C.
DUANE ARNOLD ENERGY CENTER
PALO, IA

P & ID
FIRE PROTECTION

SCALE: NONE | DWG. NO. BECH-M133<2>-LR | REV. 0

BASE P&ID REV 25