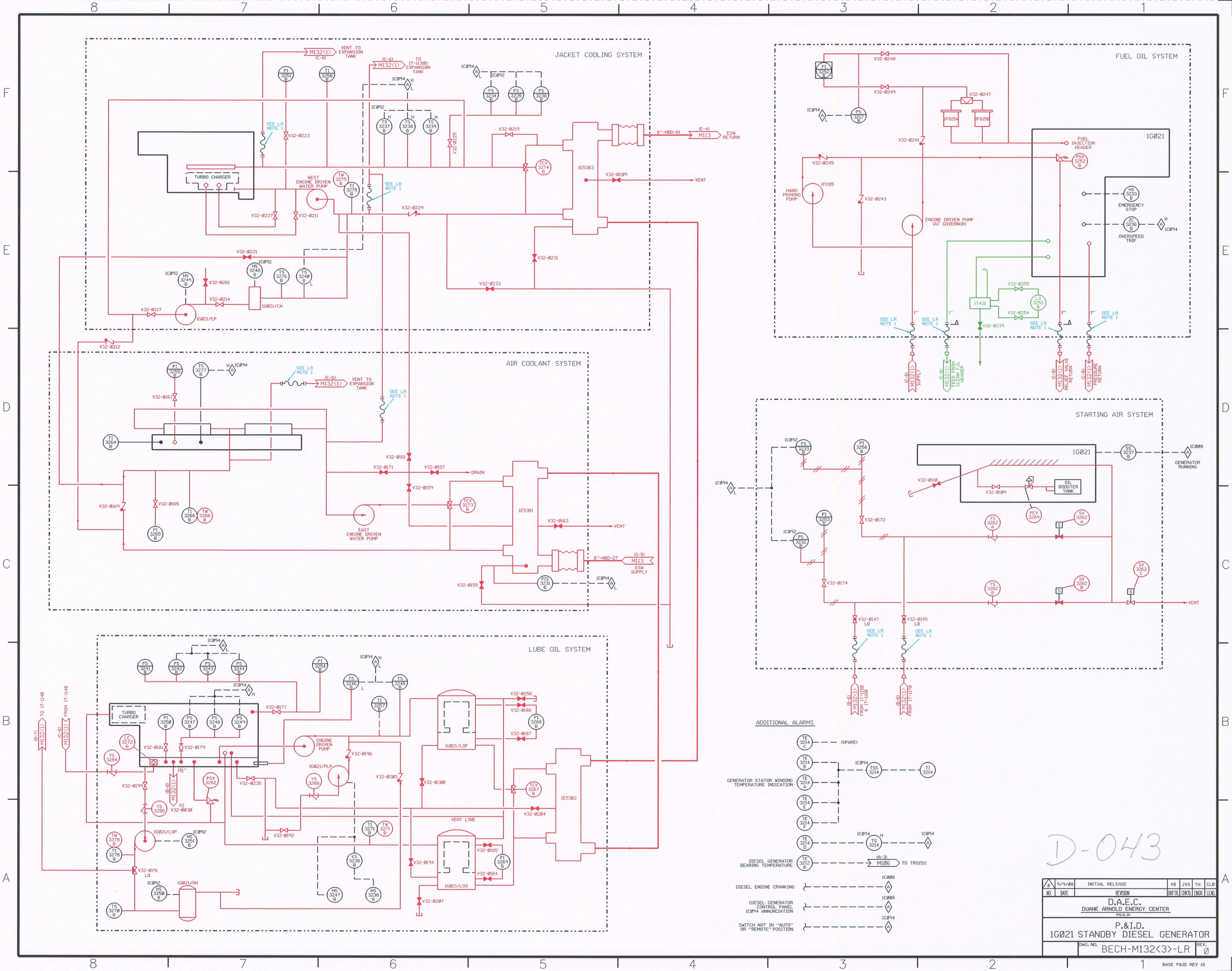

D-043

NO.	DATE	REVISION	DR'FTR.	CK'D.	ENGR.	LEAD.
0	9/9/08	INITIAL RELEASE	KB	JVS	TH	CLB

D.A.E.C.
DUANE ARNOLD ENERGY CENTER
PALO, IA

P.&I.D.
1G021 STANDBY DIESEL GENERATOR

DWG. NO. BECH-M132<3>-LR REV. 0

BASE P&ID REV 16

LR NOTES:
1. FLEX HOSES ARE SHORT LIVED.

LR LEGEND:
- COMPONENTS IN SCOPE PER 10CFR54.4(a)(1) AND/OR (a)(3) AND SUBJECT TO AMR PER 54.21
- COMPONENTS NOT SUBJECT TO AMR
- COMPONENTS IN SCOPE PER 10CFR54.4(a)(2) AND SUBJECT TO AMR PER 54.21
- SYSTEM BOUNDARY INTERFACE 24.01 STANDBY DIESEL GENERATOR