NOTE:

1. FOR OPERATION AND MAINTENANCE OF THE PLEASANT CREEK PUMPING STATION, SEE VENDOR DRAWINGS C032-001 THROUGH C032-049. ALSO SEE VENDOR MANUALS A590WSP FOR PUMPS AND W120RSL FOR THE TRANSFORMER. FOR MORE INFORMATION PERTAINING TO THE PLEASANT CREEK COMPLEX SEE DDC-2889.
2. FOR INTERNAL COMPONENTS OF 1C414A/B SEE DETAIL 1

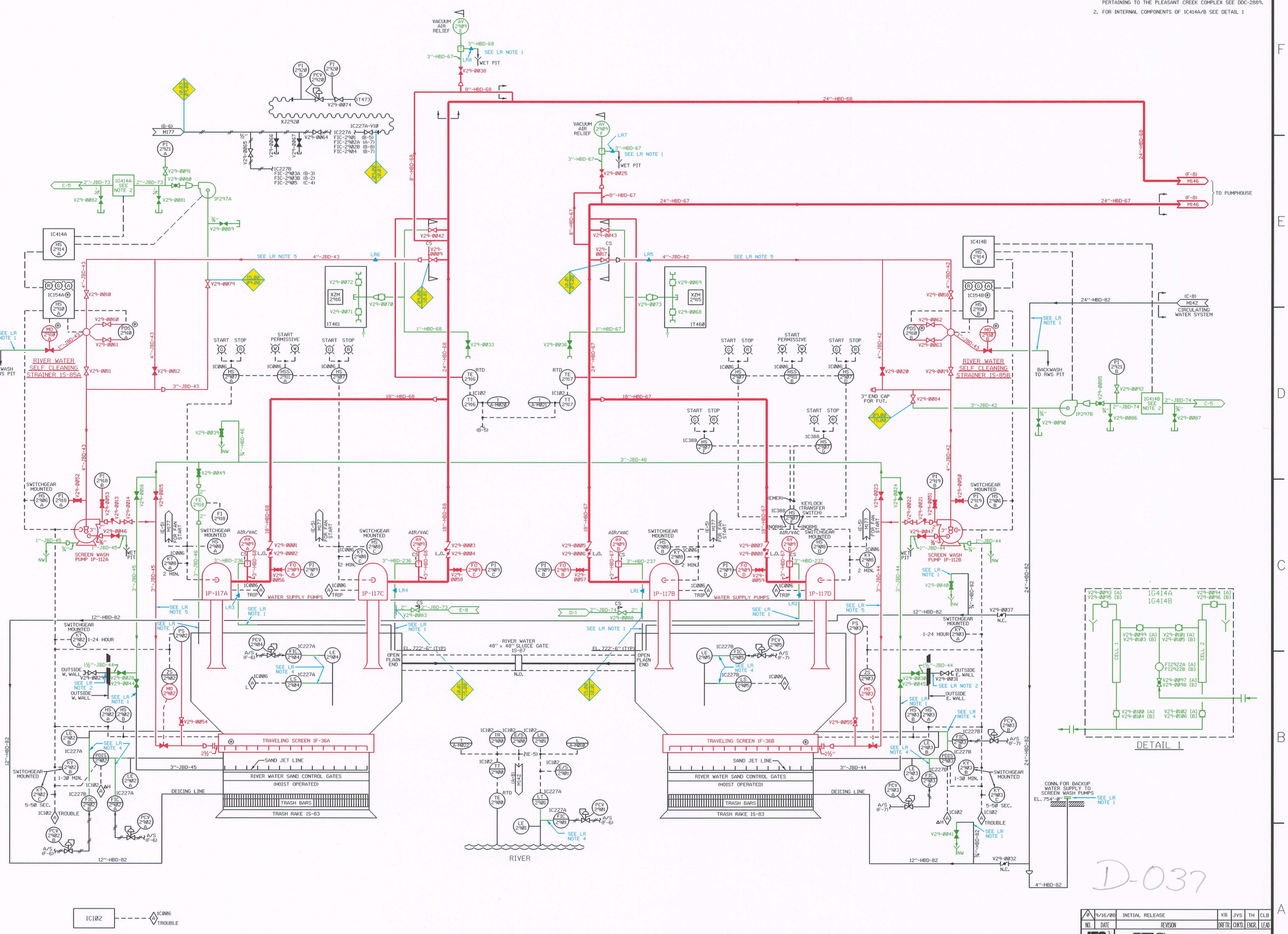

LR NSAS ANCHOR NOTES:

- ▲ LR1 SEISMIC ANCHOR HBD-237-SA-01 IS SHOWN ON DRAWING ISO-HBD-237-01.
- ▲ LR2 SEISMIC ANCHOR HBD-237-SA-02 IS SHOWN ON DRAWING ISO-HBD-237-01.
- ▲ LR3 SEISMIC ANCHOR HBD-236-SA-01 IS SHOWN ON DRAWING ISO-HBD-236-01.
- ▲ LR4 SEISMIC ANCHOR HBD-236-SA-02 IS SHOWN ON DRAWING ISO-HBD-236-01.
- ▲ LR5 SEISMIC ANCHOR JBD-042-SA-30 IS SHOWN ON DRAWING ISO-JBD-042-01.
- ▲ LR6 SEISMIC ANCHOR JBD-043-SA-34 IS SHOWN ON DRAWING ISO-JBD-043-01.
- ▲ LR7 SEISMIC ANCHOR HBD-067-SA-27 IS SHOWN ON DRAWING ISO-HBD-067-07H.
- ▲ LR8 SEISMIC ANCHOR HBD-068-SA-31 IS SHOWN ON DRAWING ISO-HBD-068-05H.

LR NOTES:

1. PIPING BELOW EL. 754'-0" IS NOT IN SCOPE.
2. PIPING LOCATED OUTSIDE BUILDING IS NOT IN SCOPE.
3. ALL EXPOSED DRAIN PIPING AND FUNNELS ARE IN SCOPE FOR LICENSE RENEWAL.
4. TUBING COMPONENTS IN PANELS 1C-227A AND 1C-227B ARE IN SCOPE FOR CRITERION (a)(2).
5. PIPE SPOOLS 4"-JBD-042, 4"-JBD-043, 3"-JBD-044, 3"-JBD-045 AND ASSOCIATED COMPONENTS ARE IN SCOPE FOR FIRE PROTECTION PER CRITERION (a)(3) ONLY.

LR LEGEND:

- COMPONENTS IN SCOPE PER 10CFR54.4(a)(1) AND/OR (a)(3) AND SUBJECT TO AMR PER 54.21
- COMPONENTS NOT SUBJECT TO AMR
- COMPONENTS IN SCOPE PER 10CFR54.4(a)(2) AND SUBJECT TO AMR PER 54.21

SYSTEM BOUNDARY INTERFACE

- 09.00 INTAKE AND TRAVELING SCREENS
- 10.01 RIVER WATER SUPPLY
- 10.03 PLANT VENTILATION SYSTEM
- 15.00 CHLORINATION & ACID FEED

D-037

NO.	DATE	REVISION	DRFTR.	CHK'D.	ENGR.	LEAD
0	9/16/08	INITIAL RELEASE	KB	JVS	TH	CLB

IES UTILITIES INC.

P.&I.D.
RIVER WATER SUPPLY SYSTEM
INTAKE STRUCTURE

DWG. NO. BECH-M129-LR REV. 0

BASE PAID REV 36