NOTES:

1. ELEVATION OF DEMINERALIZED WATER & INSTRUMENT AIR LINE SHALL BE ABOVE THE TOP OF THE STANDBY LIQUID CONTROL STORAGE TANK.
2. LOCATE DEMINERALIZED WATER SUPPLY LINE AS CLOSE AS POSSIBLE TO THE DOWNSTREAM SIDE OF TANK OUTLET VALVE.
3. DRAIN LINES SHALL BE AS CLOSE AS POSSIBLE TO UPSTREAM SIDE OF PUMP SUCTION VALVES.
4. LOCATE PUMP SUCTION VALVE AS CLOSE AS POSSIBLE TO PUMP
5. THE DISCHARGE OF THE RELIEF VALVE SHALL BE MAINTAINED IN A FLOODED CONDITION TO PREVENT EVAPORATION AND PRECIPITATION IN THIS LINE. THIS SHOULD BE ACCOMPLISHED BY INSTALLING THIS LINE AT AN ELEVATION BELOW THAT AT THE PUMP SUCTION LINE.

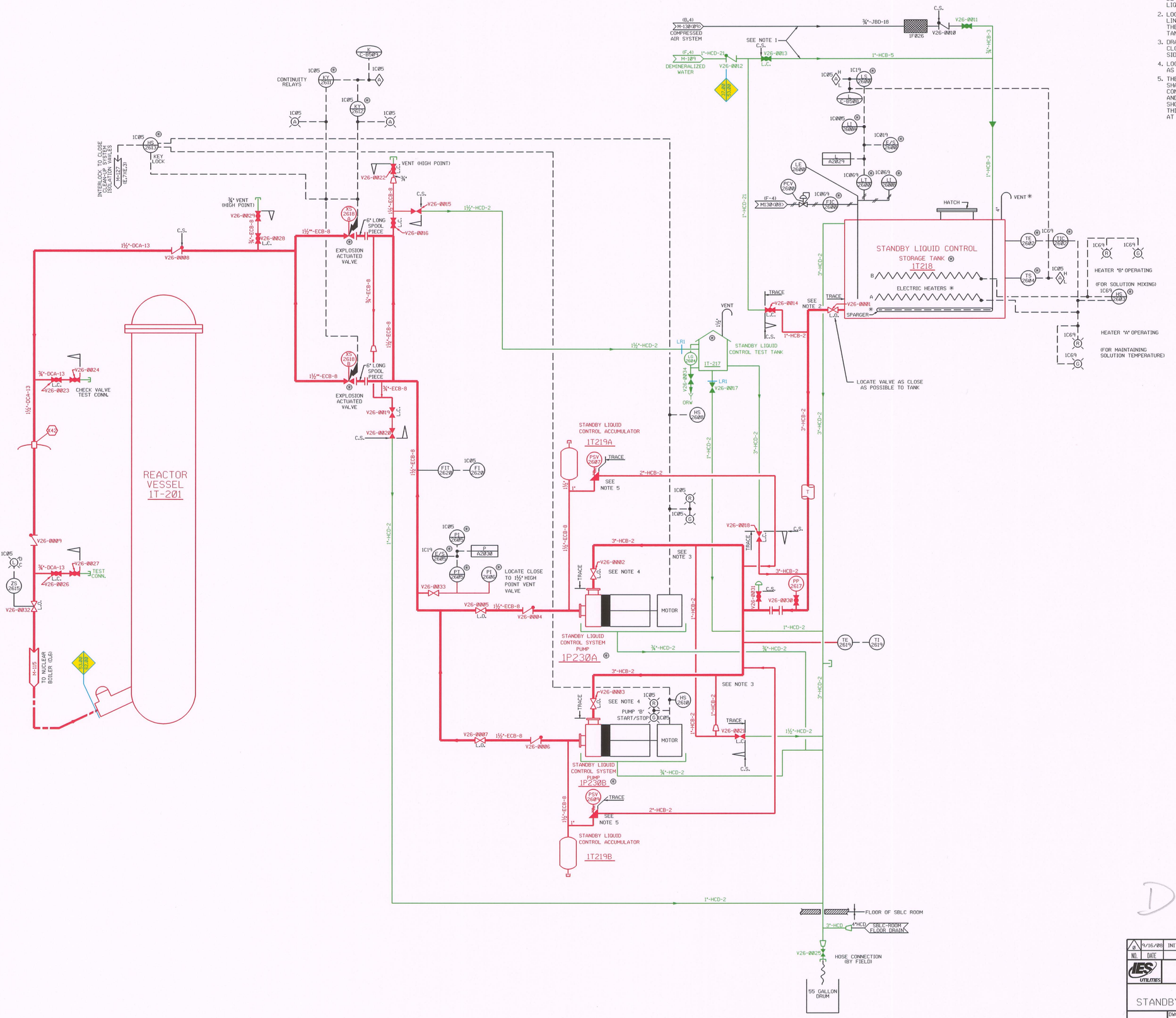

D-034

NO.	DATE	REVISION	DRFTR.	CHK'D.	ENGR.	LEAD
0	9/16/08	INITIAL RELEASE	KB	JVS	TH	CLB

IES UTILITIES INC.

P & I.D.
STANDBY LIQUID CONTROL SYSTEM

DWG. NO. BECH-M126-LR REV. 0

BASE P&ID BASE REV 25

LR NSAS ANCHOR NOTES:

LR1 STANDBY LIQUID CONTROL TEST TANK ACTS AS SEISMIC ANCHOR

LR LEGEND:

- COMPONENTS IN SCOPE PER 10CFR54.4(a)(1) AND/OR (a)(3) AND SUBJECT TO AMR PER 54.21
- COMPONENTS NOT SUBJECT TO AMR
- COMPONENTS IN SCOPE PER 10CFR54.4(a)(2) AND SUBJECT TO AMR PER 54.21
- SYSTEM BOUNDARY INTERFACE
  - 37.00 CONDENSATE AND DEMINERALIZED WATER SYSTEM
  - 53.00 STANDBY LIQUID CONTROL SYSTEM
  - 62.00 NUCLEAR BOILER