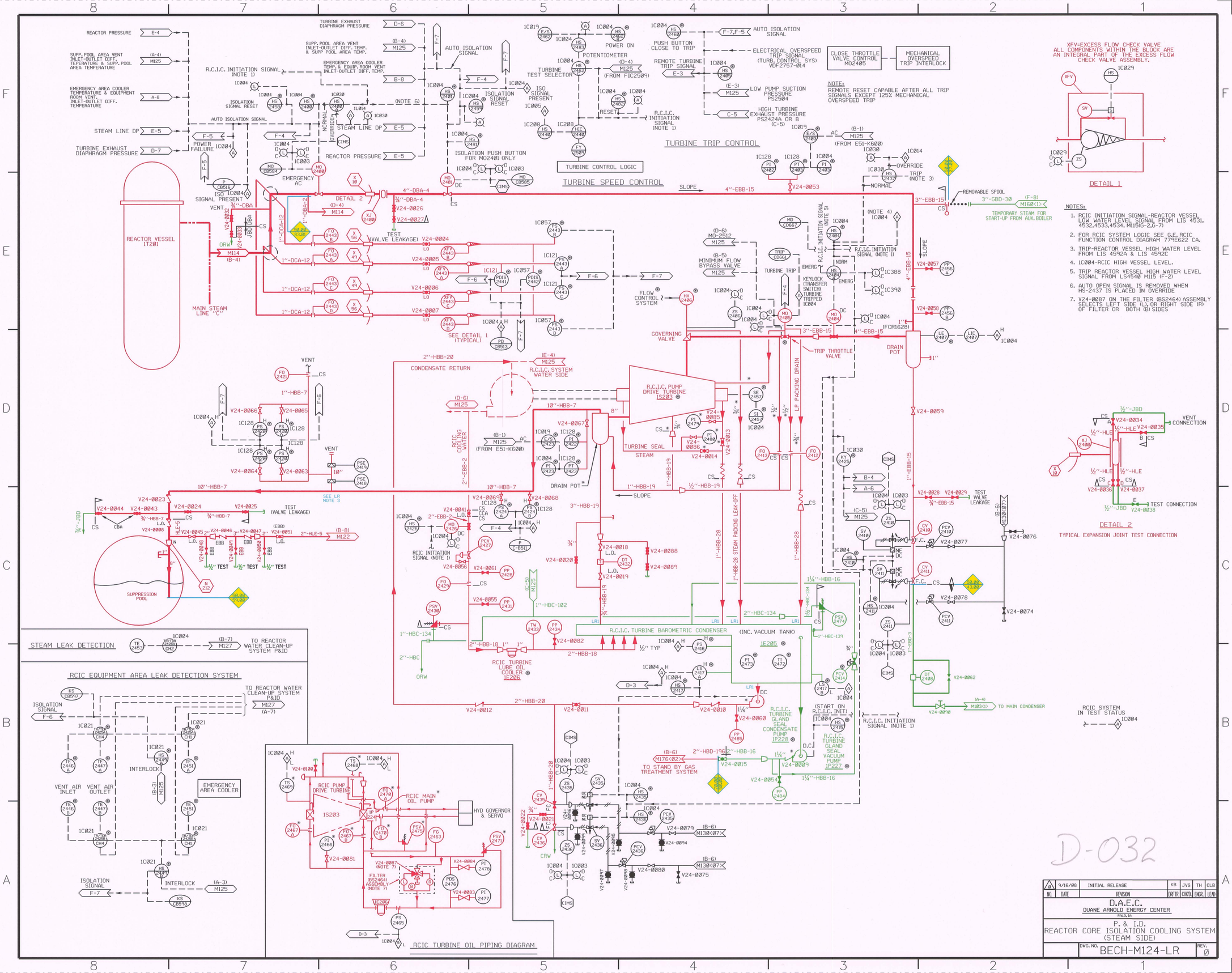

NOTES:

1. RCIC INITIATION SIGNAL-REACTOR VESSEL LOW WATER LEVEL SIGNAL FROM LIS 4531, 4532,4533,4534, M115(G-2,G-7)
2. FOR RCIC SYSTEM LOGIC SEE G.E. RCIC FUNCTION CONTROL DIAGRAM 779E622 CA.
3. TRIP-REACTOR VESSEL HIGH WATER LEVEL FROM LIS 4592A & LIS 4592C
4. 1C004-RCIC HIGH VESSEL LEVEL.
5. TRIP REACTOR VESSEL HIGH WATER LEVEL SIGNAL FROM LS4540 M115 (F-2)
6. AUTO OPEN SIGNAL IS REMOVED WHEN HS-2437 IS PLACED IN OVERRIDE
7. V24-0087 ON THE FILTER (BS2464) ASSEMBLY SELECTS LEFT SIDE (L), OR RIGHT SIDE (R) OF FILTER OR BOTH (B) SIDES

LR NSAS ANCHOR NOTES:

LR1 RCIC TURBINE BAROMETRIC CONDENSER ACTS AS A SEISMIC ANCHOR

LR NOTES:

1. ALL EXPOSED DRAIN PIPING AND FUNNELS ARE IN SCOPE FOR LICENSE RENEWAL.
2. 80 AND 80 ARE CONTAINMENT PENETRATIONS THAT ARE EVALUATED IN 99.28PC.
3. PSE 2418 & PSE 2419 ARE PERIODICALLY REPLACED

LR LEGEND:

- COMPONENTS IN SCOPE PER 10CFR54.4(aX1) AND/OR (aX3) AND SUBJECT TO AMR PER 54.21
- COMPONENTS NOT SUBJECT TO AMR
- COMPONENTS IN SCOPE PER 10CFR54.4(aX2) AND SUBJECT TO AMR PER 54.21

SYSTEM BOUNDARY INTERFACE

27.00	AUX HEAT STM BOILER
43.00	CONDENSER
50.00	RCIC
52.00	HPCI
59.00	PRIMARY CONTAINMENT
78.00	STAND-BY GAS TREATMENT
83.01	MAIN STEAM ISOLATION

NO.	DATE	REVISION	DRFTR.	CHKD.	ENGR.	LEAD
0	9/16/88	INITIAL RELEASE	KB	JVS	TH	CLB

D.A.E.C.
DUANE ARNOLD ENERGY CENTER
PALO, IA

P. & I.D.
REACTOR CORE ISOLATION COOLING SYSTEM (STEAM SIDE)

DWG. NO. BECH-M124-LR REV. 0