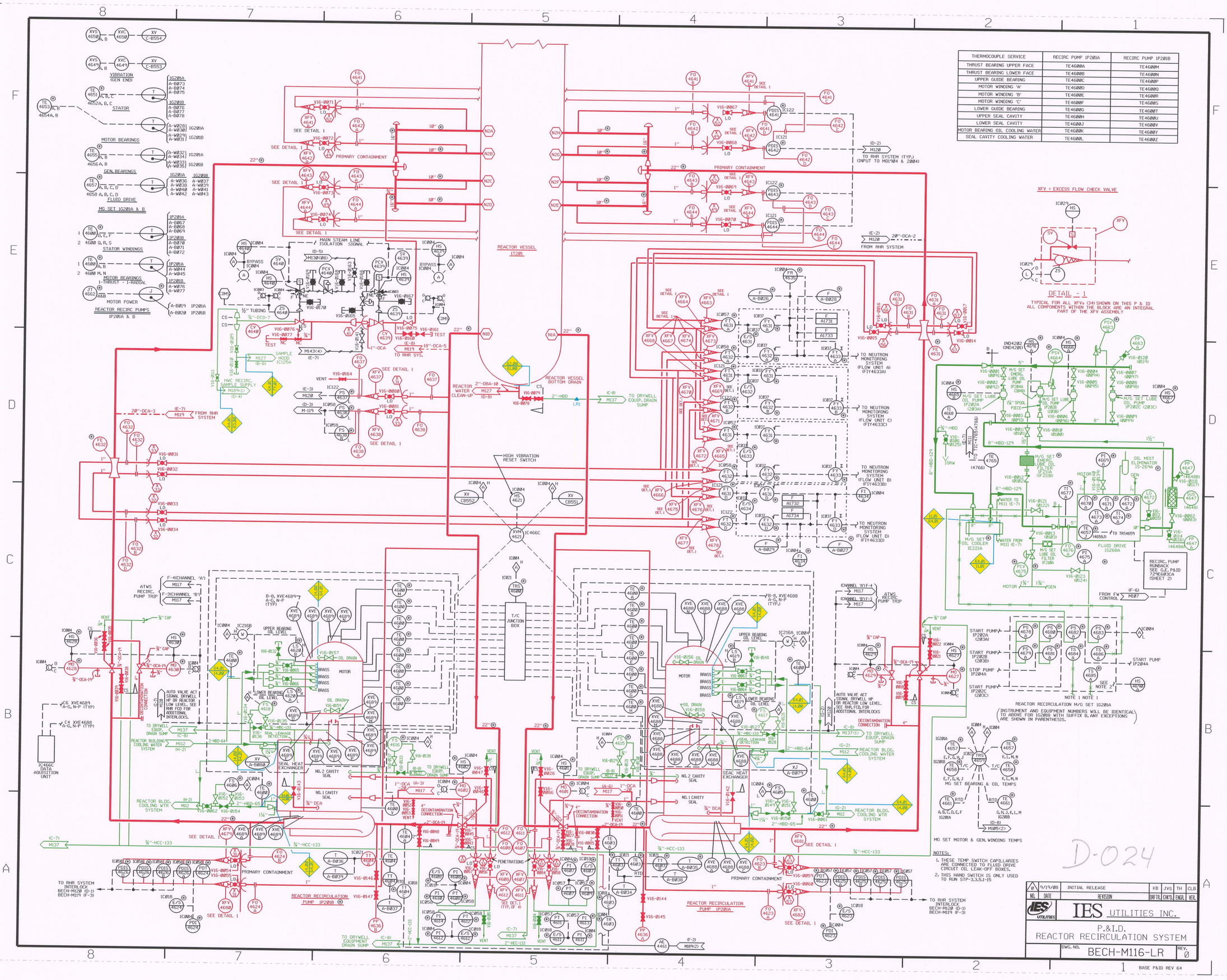

THERMOCOUPLE SERVICE	RECIRC PUMP 1P201A	RECIRC PUMP 1P201B
THRUST BEARING UPPER FACE	TE4600A	TE4600M
THRUST BEARING LOWER FACE	TE4600B	TE4600N
UPPER GUIDE BEARING	TE4600C	TE4600P
MOTOR WINDING 'A'	TE4600D	TE4600Q
MOTOR WINDING 'B'	TE4600E	TE4600R
MOTOR WINDING 'C'	TE4600F	TE4600S
LOWER GUIDE BEARING	TE4600G	TE4600T
UPPER SEAL CAVITY	TE4600H	TE4600U
LOWER SEAL CAVITY	TE4600J	TE4600V
MOTOR BEARING OIL COOLING WATER	TE4600K	TE4600Y
SEAL CAVITY COOLING WATER	TE4600L	TE4600Z

LR NSAS ANCHOR NOTES

▲LR1 SEISMIC ANCHOR PS-1 AND DETAIL B FSK-03352B

LR NOTES

1. ALL EXPOSED DRAIN PIPING AND FUNNELS ARE IN SCOPE FOR LICENSE RENEWAL.
2. (2) ARE PENETRATIONS THAT ARE EVALUATED IN 62.00 NUCLEAR BOILER.
3. (3) ARE PENETRATIONS THAT ARE EVALUATED IN 59.28PC PRIMARY CONTAINMENT STRUCTURE.

LR LEGEND:

- COMPONENTS IN SCOPE PER 10CFR54.4(a)(1) AND/OR (a)(3) AND SUBJECT TO AMR PER 54.21
- COMPONENTS NOT SUBJECT TO AMR
- COMPONENTS IN SCOPE PER 10CFR54.4(a)(2) AND SUBJECT TO AMR PER 54.21

SYSTEM BOUNDARY INTERFACE

- 11.01 GENERAL SERVICE WATER
- 14.00 REACTOR BUILDING CLOSED COOLING WATER
- 61.00 REACTOR WATER CLEAN-UP
- 62.00 NUCLEAR BOILER
- 63.00 HYDROGEN WATER CHEMISTRY
- 64.01 REACTOR VESSEL RECIRCULATION
- 77.01 REACTOR BLDG AND RADWASTE BLDG SAMPLING