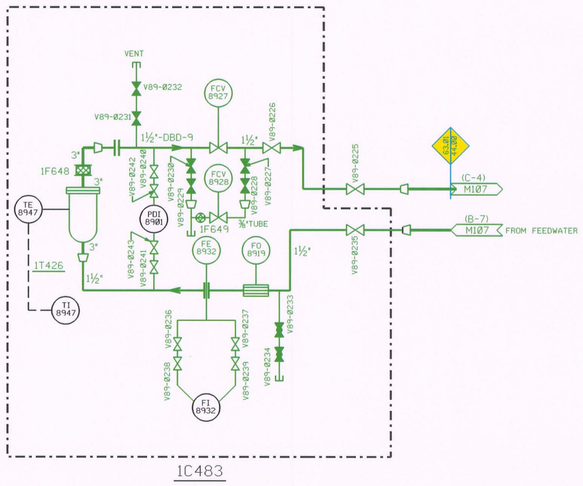

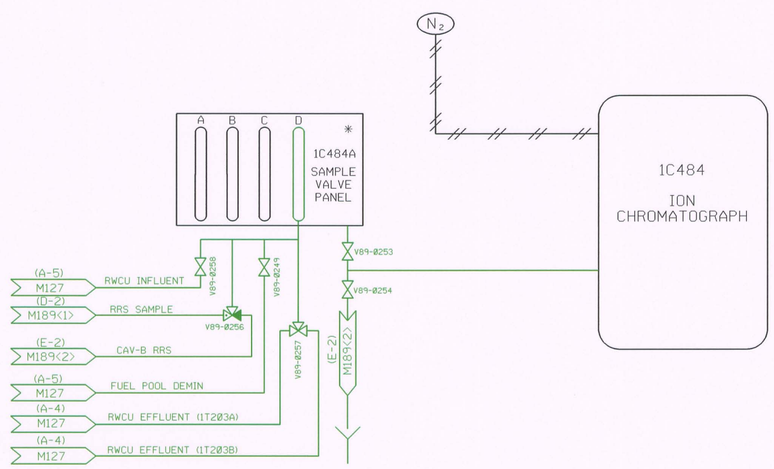

NOTES:
* - FURNISHED BY GE

D-108X

NO.	DATE	REVISION	DRFTR.	CHK'D.	ENGR.	LEAD
0	9/16/08	INITIAL RELEASE	KB	JVS	TH	CLB

D.A.E.C.
DUANE ARNOLD ENERGY CENTER
PALO, IA

ZINC INJECTION SYSTEM
P. & I.D.

SCALE: —
DWG. NO. BECH-M189<3>-LR
REV. 0

BASE P&ID REV 4

LR NOTE
1. ALL EXPOSED DRAIN PIPING AND FUNNELS ARE IN SCOPE FOR LICENSE RENEWAL

LR LEGEND:
- COMPONENTS IN SCOPE PER 10CFR54.4(a)(1) AND/OR (a)(3) AND SUBJECT TO AMR PER 54.21
- COMPONENTS NOT SUBJECT TO AMR
- COMPONENTS IN SCOPE PER 10CFR54.4(a)(2) AND SUBJECT TO AMR PER 54.21
- SYSTEM BOUNDARY INTERFACE
  - 44.00 CONDENSATE
  - 63.01 ZINC INJECTION SYSTEM