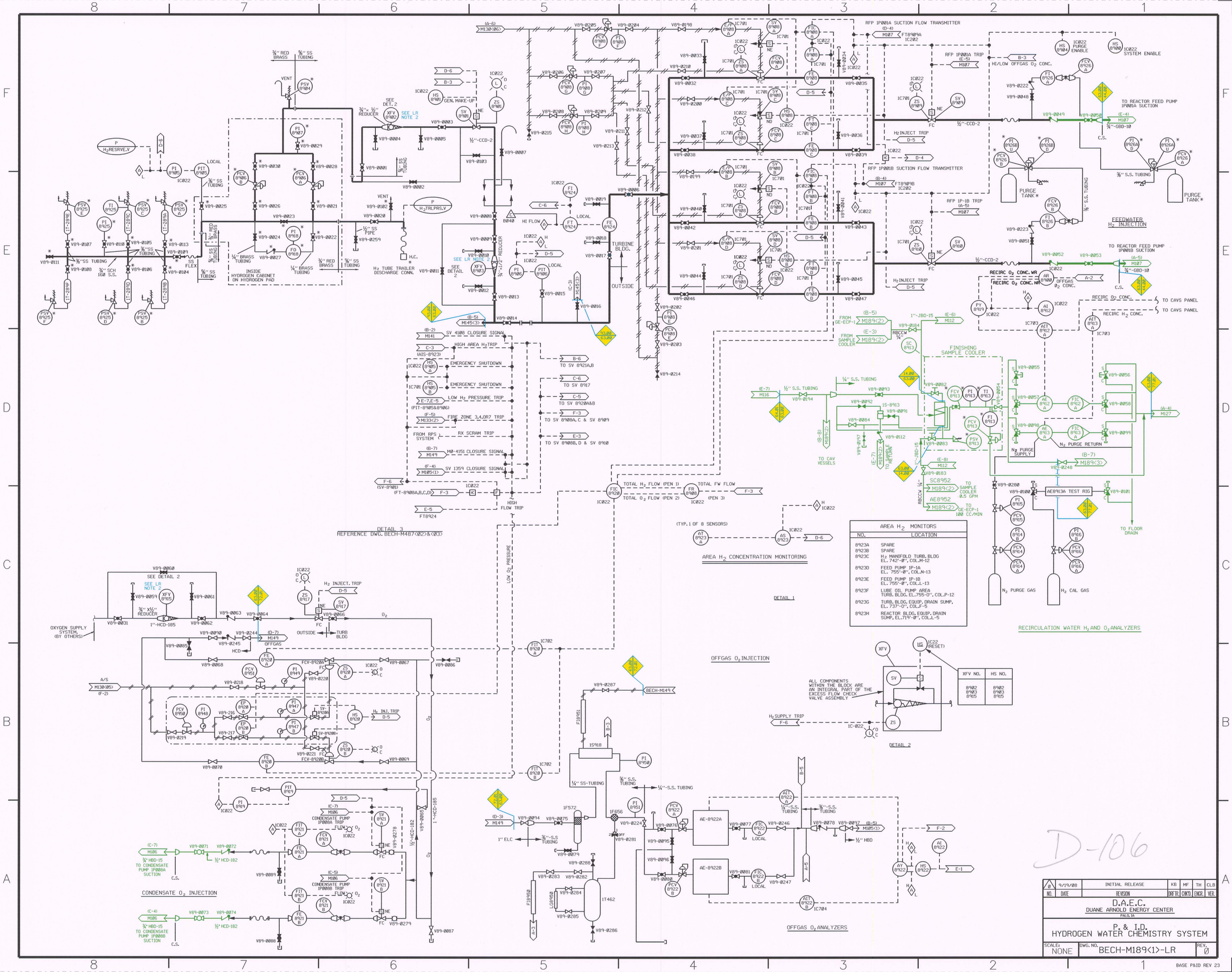

NO.	LOCATION
8923A	SPARE
8923B	SPARE
8923C	H2 MANIFOLD TURB. BLDG EL. 742'-0", COL.M-12
8923D	FEED PUMP 1P-1A EL. 755'-0", COL.N-13
8923E	FEED PUMP 1P-1B EL. 755'-0", COL.L-13
8923F	LUBE OIL PUMP AREA TURB. BLDG. EL.755-0", COL.P-12
8923G	TURB. BLDG. EQUIP. DRAIN SUMP, EL.737'-0", COL.F-5
8923H	REACTOR BLDG. EQUIP. DRAIN SUMP, EL.719'-8", COL.L-5

AREA H2 MONITORS

XFV NO.	HS NO.
8902	8902
8903	8903
8915	8915

LR NOTES:

1. ALL EXPOSED DRAIN PIPING AND FUNNELS ARE IN SCOPE FOR LICENSE RENEWAL.
2. XFV8902, XFV8903 & XFV8915 ARE IN-SCOPE FOR FIRE PROTECTION (a)(3). ONLY ACTIVE PORTIONS OF XFV'S ARE IN-SCOPE FOR FIRE PROTECTION.

LR LEGEND:

- COMPONENTS IN SCOPE PER 10CFR54.4(a)(1) AND/OR (a)(3) AND SUBJECT TO AMR PER 54.21
- COMPONENTS NOT SUBJECT TO AMR
- COMPONENTS IN SCOPE PER 10CFR54.4(a)(2) AND SUBJECT TO AMR PER 54.21

SYSTEM BOUNDARY INTERFACE

- 14.00 REACTOR BUILDING CLOSED COOLING WATER
- 44.00 CONDENSATE AND FEEDWATER/EXTRACT STEAM
- 63.00 HYDROGEN WATER CHEMISTRY
- 64.01 REACTOR RECIRCULATION
- 72.01 OFF-GAS EXHAUST
- 77.01 REACTOR BUILDING AND RADWASTE BUILDING SAMPLING
- 93.00 TURBINE

D-106

NO.	DATE	REVISION	DRFTR.	CHK'D.	ENGR.	VER.
0	9/19/08	INITIAL RELEASE	KB	MF	TH	CLB

D.A.E.C.
DUANE ARNOLD ENERGY CENTER
PALO, IA

P. & I.D.
HYDROGEN WATER CHEMISTRY SYSTEM

SCALE: NONE | DWG. NO. BECH-M189<1>-LR | REV. 0