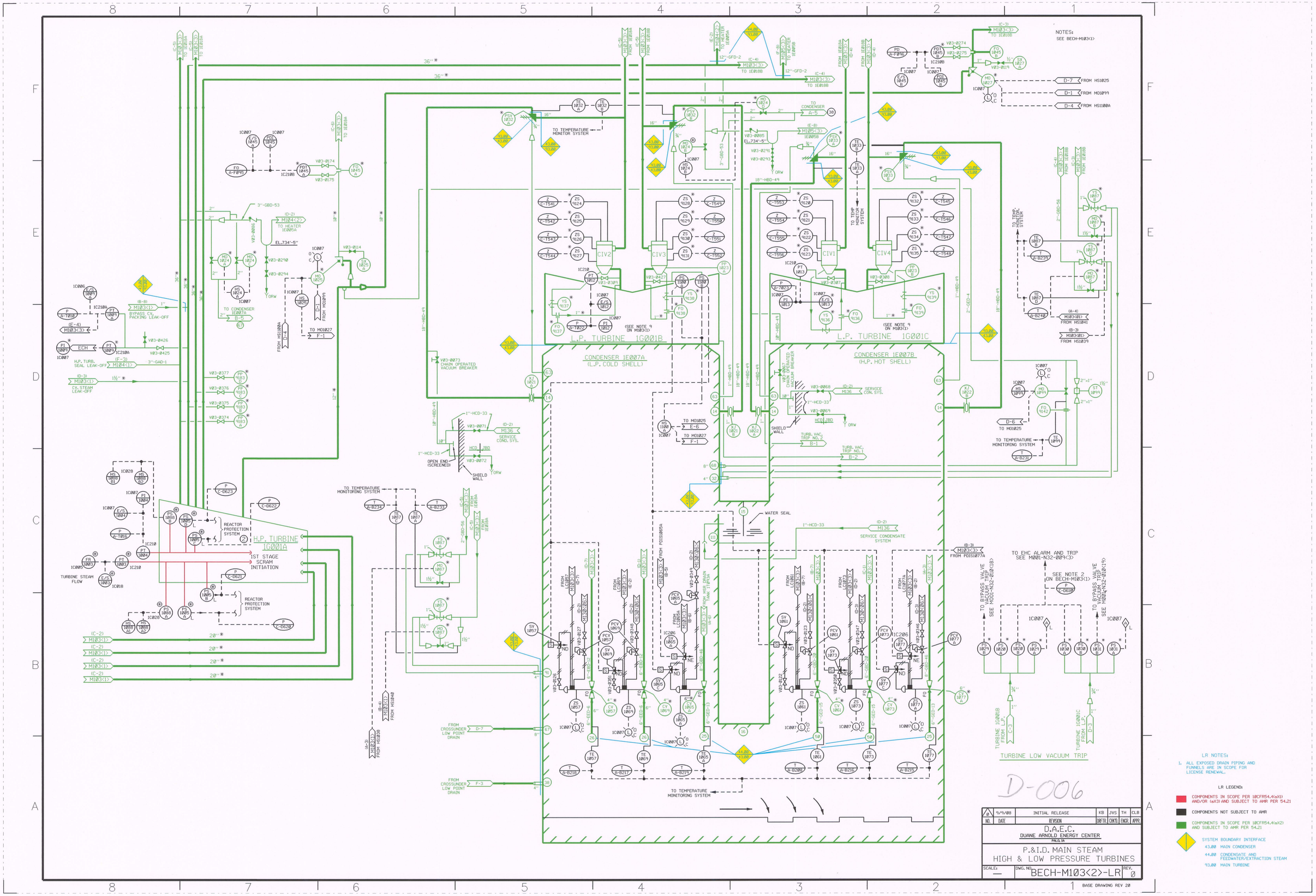


LR NOTES:

1. ALL EXPOSED DRAIN PIPING AND FUNNELS ARE IN SCOPE FOR LICENSE RENEWAL.

LR LEGEND:

- COMPONENTS IN SCOPE PER 10CFR54.4(a)(1) AND/OR (a)(3) AND SUBJECT TO AMR PER 54.21
- COMPONENTS NOT SUBJECT TO AMR
- COMPONENTS IN SCOPE PER 10CFR54.4(a)(2) AND SUBJECT TO AMR PER 54.21

SYSTEM BOUNDARY INTERFACE

- 43.00 MAIN CONDENSER
- 44.00 CONDENSATE AND FEEDWATER/EXTRACTION STEAM
- 93.00 MAIN TURBINE