NAC INTERNATIONAL

Atlanta Corporate Headquarters
3930 East Jones Bridge Road, Suite 200
Norcross, GA 30092
Phone 770-447-1144
Fax 770-447-1797
www.nacintl.com

November 20, 2006

U.S. Nuclear Regulatory Commission
11555 Rockville Pike
Rockville, MD 20852-2738

Attn: Document Control Desk

Subject: Submittal of Replacement Pages to Update the NAC-UMS® FSAR from Revision 5 to Revision 6 (Docket No. 72-1015)

Reference: 1. Submittal of NAC-UMS® FSAR, Revision 5 (Docket No. 72-1015), NAC International, October 11, 2005

In accordance with the requirements of 10 CFR 72.248, NAC International (NAC) herewith provides five copies of the changed pages necessary to complete the update of the NAC-UMS® Universal Storage System Final Safety Analysis Report (FSAR) to Revision 6.

Revision 6 of the NAC-UMS® FSAR is based on Reference 1 and on the changes that have been reviewed and incorporated by NAC under the 10 CFR 72.48 regulation. A certification of the accuracy of the Revision 6 changes by a duly authorized officer of NAC is provided as Attachment 3.

A 10 CFR 72.48 Determination Summary Report for the NAC-UMS® Universal Storage System for the period of November 2005 – November 2006 is provided as Attachment 1 for your information. Please note that none of the changes described required a 10 CFR 72.48 Evaluation.

A detailed description of all of the changes incorporated in Revision 6 of the NAC-UMS® FSAR is provided in the List of Changes for the NAC-UMS® FSAR, Revision 6 as Attachment 2.

Consistent with NAC administrative practice, NAC-UMS® FSAR, Revision 6, changed pages are uniquely identified by the revision number located in the header of each page. Revision bars mark the FSAR text changes. The NAC-UMS® FSAR, Revision 6, reflects all of the requirements contained in the NAC-UMS® CoC, Revision 0, Amendment 1, Amendment 2, Amendment 3 and Amendment 4.

NMSS01

If you have any comments or questions, please contact me at my direct number, (678) 328-1274.

Sincerely,

Anthony L. Patko
Director, Licensing
Engineering

Attachment 1: 10 CFR 72.48 Determination Summary Report for the NAC-UMS® Universal Storage System (Period Covered: November 2005 – November 2006)

Attachment 2: List of Changes for the NAC-UMS® Universal Storage System FSAR, Revision 6

Attachment 3: Certification of the Accuracy of the Revision 6 Changes

Enclosures: Replacement pages to update the NAC-UMS® Universal Storage System Final Safety Analysis Report from Revision 5 to Revision 6 (5 copies)

cc: Glenn Michael - APS (w/o encl.)
John Niles - MY (w/o encl.)
Keith Waldrop - Duke (w/o encl.)

November 2006

Revision 6

NAC-UMS®

SAFETY ANALYSIS REPORT

for the

UMS Universal Transport Cask

Docket No. 71-9270

NAC INTERNATIONAL

Attachment 1

10 CFR 72.48 Determination Summary Report

for the

NAC-UMS® Universal Storage System
(Docket No. 72-1015)

Period Covered: November 2005 – November 2006

(Note: 72.48 Changes for the Period of November 2004 – October 2005 were submitted on October 11, 2005)

NAC International

November 2006

72.48 Determination ID #NAC-05-UMS-032

Change Description

Revises Table 8.1.1-3 to correct a typographical error. In the first column, the third row under the header should be "$14.0 < L \leq 17.6$"; it now reads "$14.0 < L \leq 7.6$". The error was made when compiling Revision 4 and was carried over into Revision 5.

Chapter 8, Table 8.1.1-3, page 8.1.1-11.

Source of Change: 72.48 Determination ID #NAC-05-UMS-032

Originating Document: DCR(L) 790-FSAR-5A

This DCR(L) was prepared to correct an error made when compiling Revision 4, which was carried over into Revision 5. Table 8.1.1-3 is revised as follows: In the first column, the third row under the header IS) "$14.0 < L \leq 17.6$"; WAS) "$14.0 < L \leq 7.6$".

72.48 Determination ID #NAC-06-UMS-001

Change Description

Revises UMS® Tech Spec BASES C 3.1.2 to reflect the vacuum drying information contained in the "precaution" in Step 31 of FSAR Section 8.1.1 (i.e., covering situation when the spent fuel pool water temperature or the ambient temperature for the cask preparation area is below 65°F).

Chapter 12, pages 12C3-14.

Source of Change: 72.48 Determination ID #NAC-06-UMS-001

Originating Document: DCR(L) 790-FSAR-5B

The current Revision 5 contains additional limits on the canister vacuum drying pressure in Chapter 8, Section 8.1.1, Loading and Closing the Transportable Storage Canister, Step 31, that are not contained in the BASES C. 3.1.2. This DCR(L) corrects this oversight and amends the BASES C 3.1.2 to be in agreement with the Chapter 8 Operating Procedures, thereby eliminating any possible confusion on the part of the cask user.

72.48 Determination ID #NAC-06-UMS-002

Change Description

Revises UMS® Tech Spec BASES C 3.1.6 to include SR 3.1.6.2 in order to coincide with Tech Spec SR 3.1.6.2 and the Safety Evaluation Report.

Chapter 12, pages 12C3-30.

Source of Change: 72.48 Determination ID #NAC-06-UMS-002

Originating Document: DCR(L) 790-FSAR-5C

BASES 3.1.6, CONCRETE CASK Heat Removal System, includes a basis for Tech Spec SR 3.1.6.1, but not for Tech Spec SR 3.1.6.2. This DCR(L) corrects this oversight.

72.48 Determination ID #NAC-06-UMS-003

Change Description

Revises Chapters 1, 2, 8, 9, 10 & 11 to agree with Amendment 4 of the UMS® Technical Specifications regarding vertical concrete cask temperature-monitoring procedures. Also revises Section 1.2.2 to bring canister vacuum drying procedures into compliance with UMS® Amendment 4.

Chapter 1, pages 1.2-11 thru 1.2-29 & pages 1.5-8, 1.5-21 & 1.5-44; Chapter 2, pages 2.3-5 & 2.3-6; Chapter 8, pages 8.1.3-2 & 8.2-1; Chapter 9, pages 9.1-10 & 9.2-1 thru 9.2-3; Chapter 10, pages 10.1-2, 10.3-2 & 10.3-3; Chapter 11, pages 11.1.1-1, 11.1.2-1, 11.1.4-1 & 11.1.4-2, 11.2.7-1, 11.2.8-11, 11.2.9-5, 11.2.13-1 & 11.2.13-2.

Source of Change: 72.48 Determination ID #NAC-06-UMS-003

Originating Document: DCR(L) 790-FSAR-5D

A review of the UMS® FSAR, Revision 5A, revealed that several changes needed to be made to Chapters 1, 2, 8, 9, 10 & 11 regarding vertical concrete cask temperature-monitoring procedures and canister vacuum drying procedures to bring it into compliance with Amendment 4 of the UMS® Technical Specifications. These changes clarify inconsistencies in the document so that it is in agreement with UMS® Amendment 4.

72.48 Determination ID #NAC-06-UMS-005

Change Description

Revises "Corrective Actions" in Chapter 11 to be consistent with Section A 5.4 of the UMS® Technical Specifications.

Chapter 11, pages 11.2.4-12, 11.2.6-3, 11.2.8-11, 11.2.8-12, 11.2.9-5, 11.2.10-4, 11.2.11-13, 11.2.12-71 & 11.2.13-2.

Source of Change: 72.48 Determination ID #NAC-06-UMS-005

Originating Document: DCR(L) 790-FSAR-5E

A review of the UMS® FSAR revealed that some changes needed to be made to the "Corrective Actions" in Chapter 11. As written, some of them appeared to contradict Section A 5.4 of the Technical Specifications, "Surveillance After an Off-Normal, Accident, or Natural Phenomena Event." These changes clarify inconsistencies in the document.

72.48 Determination ID #NAC-06-UMS-006

Change Description

Revises Section 3.4.3.1.3, Top Lift by Lifting Lugs, subsection Nelson Studs, to reflect the structural analysis information in Calculation No. EA790-2313, Rev. 1.

Chapter 3, pages 3.4.3-23 thru 3.4.3-26.

Source of Change: 72.48 Determination ID #NAC-06-UMS-006

Originating Document: DCR(L) 790-FSAR-5F

A review of the UMS® FSAR revealed that Section 3.4.3.1.3, Top Lift by Lifting Lugs, subsection Nelson Studs, had not been updated to reflect the information in Calculation No. EA790-2313, Rev. 1, "UMS VCC Lift Component Structural Analysis." These changes correct this oversight, so the information in the UMS® FSAR will be in agreement with this calculation.

72.48 Determination ID #NAC-06-UMS-007

Change Description

Revises Section 1.8, License Drawings, to incorporate Rev. 13 of Drawing 790-561, Weldment, Structure, Vertical Concrete Cask (VCC), NAC-UMS®.

Chapter 1, page 1.8-1.

Source of Change: 72.48 Determination ID #NAC-05-UMS-007

Originating Document: DCR(L) 790-FSAR-5G

This DCR(L) was prepared to incorporate Revision 13 of Drawing 790-561 into the UMS® FSAR, Revision 6. An optional weld symbol for the weld between the inlet sides to the bottom of the base weldment has been added. Also, the weld symbol for the seal weld of the inlet side to the bottom of the base weldment has been corrected to remove the broken line that designated the bottom as the part to be chamfered/beveled.

Attachment 2

List of Changes

for

NAC-UMS® FSAR, Revision 6
(Docket No 72-1015)

NAC International

November 2006

List of Changes for the NAC-UMS® FSAR, Revision 6

Based on NAC-UMS® FSAR, Revision 5; and incorporating 10 CFR 72.48 changes for the period November 2005 through November 2006

Chapter/Page/ Figure/Table	Source of Change: 72.48/DCR(L) Editorial	Description of Change
Note: The List of Effective Pages and any affected Chapter Table of Contents, List of Figures and List of Tables have been revised accordingly to reflect the list of changes detailed below.		
Chapter 1		
Page 1.2-11	72.48/DCR(L) 790-FSAR-5D	Section 1.2.1.5.11 – revised throughout
Page 1.2-12	72.48/DCR(L) 790-FSAR-5D	Section 1.2.2 – deleted 1st paragraph
Page 1.2-13	72.48/DCR(L) 790-FSAR-5D	3rd bullet – added last sentence; 4th bullet – revised 1st & 3rd sentences; 5th bullet – revised throughout; added new last bullet & following new paragraph
Page 1.5-8, Table 1.5-1	72.48/DCR(L) 790-FSAR-5D	Description of Compliance column, 1st sentence – changed "testability" to "verification"; made previous 2nd sentence into 2 revised sentences
Page 1.5-21, Table 1.5-1	72.48/DCR(L) 790-FSAR-5D	Description of Compliance column, 3rd row, 4th paragraph – revised throughout
Page 1.5-44, Table 1.5-1	72.48/DCR(L) 790-FSAR-5D	Description of Compliance column, 1st row, 1st sentence – revised throughout
Pages 1.8-1	72.48/DCR(L) 790-FSAR-5G	Included Revision 13 of Drawing 790-561 (& put revised drawing in FSAR)
Chapter 2		
Page 2.3-5	72.48/DCR(L) 790-FSAR-5D	Section 2.3.3.2 – section title and paragraph revised throughout
Chapter 3		
Page 3.4.3-23	72.48/DCR(L) 790-FSAR-5F	Section titled "Nelson Studs," last sentence – changed "13,467 pounds" to "14,272 pounds"
Page 3.4.3-24	72.48/DCR(L) 790-FSAR-5F	Revised picture of "Pedestal Finite Element Model"
Page 3.4.3-25	72.48/DCR(L) 790-FSAR-5F	Nelson stud information revised throughout
Page 3.4.3-26	72.48/DCR(L) 790-FSAR-5F	Revised margin of safety for the Nelson stud

Chapter/Page/ Figure/Table	Source of Change: Amendment 72.48/DCR(L) Editorial	Description of Change
Chapter 8		
Page 8-1.1-11, Table 8.1.1-3	72.48/DCR(L) 790-FSAR-5A	3rd row under 1st column – changed "≤ 7.6" to "≤ 17.6"
Page 8.1.3-2	72.48/DCR(L) 790-FSAR-5D	Deleted previous item #11; old item #12 became new item #11; added new item #12 & new item #13
Page 8.2-1	72.48/DCR(L) 790-FSAR-5D	Section 8.2, 4th paragraph, step #1 – revised throughout
Chapter 9		
Page 9.1-10	72.48/DCR(L) 790-FSAR-5D	Section 9.1.7, 2nd & 3rd sentences – revised throughout
Page 9.2-1	72.48/DCR(L) 790-FSAR-5D	Section 9.2.1, 3rd, 4th, 5th & 6th paragraphs – revised throughout
Chapter 10		
Page 10.1-2	72.48/DCR(L) 790-FSAR-5D	2nd bullet at top of page – added "Optional"
Page 10.3-2	72.48/DCR(L) 790-FSAR-5D	Section 10.3.2, 2nd paragraph, 1st bullet, 1st & 2nd sentences – revised throughout; added new 2nd bullet
Chapter 11		
Page 11.1.1-1	72.48/DCR(L) 790-FSAR-5D	Section 11.1.1.2 – revised sentence throughout
Page 11.1.2-1	72.48/DCR(L) 790-FSAR-5D	Section 11.1.2.2, 1st sentence – revised throughout
Page 11.1.4-1	72.48/DCR(L) 790-FSAR-5D	Section 11.1.4 – revised throughout Section 11.1.4.1 – revised throughout Section 11.1.4.2 – revised throughout Section 11.1.4.3, 1st paragraph – revised throughout; deleted 2nd paragraph
Page 11.1.4-2	72.48/DCR(L) 790-FSAR-5D	Section 11.1.4.4 – revised throughout
Page 11.2.4-12	72.48/DCR(L) 790-FSAR-5E	Section 11.2.4.4 – revised throughout
Page 11.2.6-3	72.48/DCR(L) 790-FSAR-5E	Section 11.2.6.4 – added new 2nd paragraph
Page 11.2.7-1	72.48/DCR(L) 790-FSAR-5D	Section 11.2.7.2 – revised throughout
Page 11.2.8-11	72.48/DCR(L) 790-FSAR-5D & DCR(L) 790-FSAR-5E	Added new 2nd paragraph following table Section 11.2.8.3 – revised throughout
Page 11.2.8-12	72.48/DCR(L) 790-FSAR-5D	Section 11.2.8.3 (continued) – revised throughout
Page 11.2.9-5	72.48/DCR(L) 790-FSAR-5D & DCR(L) 790-FSAR-5E	Section 11.2.9.3 – revised throughout
Page 11.2.10-4	72.48/DCR(L) 790-FSAR-5E	Section 11.2.10.4 – revised throughout

Chapter/Page/ Figure/Table	Source of Change: Amendment 72.48/DCR(L) Editorial	Description of Change
Page 11.2.11-13	72.48/DCR(L) 790-FSAR-5E	Section 11.2.11.4 – revised throughout
Page 11.2.12-71	72.48/DCR(L) 790-FSAR-5E	Section 11.2.12.5 – added new 1st paragraph; 3rd paragraph, last sentence – added "in accordance with FSAR Section 8.1.2, Item 17, Note1"; last paragraph – added "if damaged"
Page 11.2.13-1	72.48/DCR(L) 790-FSAR-5D	Section 11.2.13, 2nd paragraph – revised throughout Section 11.2.13.1, 2nd sentence – deleted "condition" Section 11.2.13.2 – added new 2nd sentence
Page 11.2.13-2	72.48/DCR(L) 790-FSAR-5D & superseded by DCR(L) 790-FSAR-5E	Section 11.2.13.4, – revised throughout
Chapter 12		
Page 12C3-14	72.48/DCR(L) 790-FSAR-5B	Section C 3.1.2, Applicable Safety Analysis (continued) – revised throughout
Page 12C3-30	72.48/DCR(L) 790-FSAR-5C	Section C 3.1.6, Surveillance Requirements – added SR 3.1.6.2

Attachment 3

CERTIFICATION OF ACCURACY

OF THE

NAC-UMS® UNIVERSAL STORAGE SYSTEM FINAL SAFETY ANALYSIS REPORT,

REVISION 6

NAC International

November 2006

NAC INTERNATIONAL

CERTIFICATION OF ACCURACY
PURSUANT TO 10 CFR 72. 248(c)(4)(i)

Thomas A. Danner (Affiant), Vice President, Engineering, of NAC International, hereinafter referred to as NAC, at 3930 East Jones Bridge Road, Norcross, Georgia 30092, being duly sworn, deposes and certifies that:

1. Affiant has reviewed the information described in Item 2, is personally familiar with the preparation, checking and verification of that information and is authorized to certify its accuracy.

2. The information being certified as accurate includes all of the changes incorporated into the NAC-UMS® Universal Storage System Final Safety Analysis Report, Revision 6.

STATE OF GEORGIA, COUNTY OF GWINNETT

Mr. Thomas A. Danner, being duly sworn, deposes and says:

That he has read the foregoing affidavit and the matters stated therein are true and correct to the best of his knowledge, information and belief.

Executed at Norcross, Georgia, this 20th day of November 2006.

Thomas A. Danner
Vice President, Engineering
NAC International

Subscribed and sworn before me this 20th day of November, 2006.

Jeannie Kiretob
Notary Public

November 2006

Revision 6

NAC-UMS

Universal MPC System

FINAL SAFETY ANALYSIS REPORT

for the UMS Universal Storage System

Docket No. 72-1015

NAC INTERNATIONAL

Atlanta Corporate Headquarters: 3930 East Jones Bridge Road, Norcross, Georgia 30092 USA
Phone 770-447-1144, Fax 770-447-1797, www.nacintl.com

List of Effective Pages

List of Effective Pages

Chapter 1

1-i ..... Revision 3
1-ii ..... Revision 6
1-1 ..... Revision 0
1-2 ..... Revision 5
1-3 ..... Revision 5
1-4 ..... Revision 3
1-5 ..... Amendment 2
1-6 ..... Revision 3
1-7 ..... Revision 3
1-8 ..... Revision 3
1.1-1 ..... Revision 3
1.1-2 ..... Revision 4
1.1-3 ..... Revision 3
1.1-4 ..... Revision 0
1.2-1 ..... Revision 3
1.2-2 ..... Revision 3
1.2-3 ..... Revision 3
1.2-4 ..... Revision 3
1.2-5 ..... Revision 3
1.2-6 ..... Revision 3
1.2-7 ..... Revision 4
1.2-8 ..... Revision 3
1.2-9 ..... Revision 3
1.2-10 ..... Revision 4
1.2-11 ..... Revision 6
1.2-12 ..... Revision 6
1.2-13 ..... Revision 6
1.2-14 ..... Revision 6
1.2-15 ..... Revision 6
1.2-16 ..... Revision 6
1.2-17 ..... Revision 6
1.2-18 ..... Revision 6
1.2-19 ..... Revision 6
1.2-20 ..... Revision 6
1.2-21 ..... Revision 6
1.2-22 ..... Revision 6
1.2-23 ..... Revision 6
1.2-24 ..... Revision 6
1.2-25 ..... Revision 6
1.2-26 ..... Revision 6
1.2-27 ..... Revision 6
1.2-28 ..... Revision 6
1.2-29 ..... Revision 6
1.3-1 ..... Revision 4
1.3-2 ..... Revision 5
1.3-3 ..... Revision 4
1.4-1 ..... Revision 0
1.4-2 ..... Revision 0
1.5-1 ..... Revision 0
1.5-2 ..... Revision 0
1.5-3 ..... Revision 0
1.5-4 ..... Revision 0
1.5-5 ..... Revision 3
1.5-6 ..... Revision 0
1.5-7 ..... Revision 0
1.5-8 ..... Revision 6
1.5-9 ..... Revision 3
1.5-10 ..... Revision 0
1.5-11 ..... Revision 3
1.5-12 ..... Revision 0
1.5-13 ..... Revision 0
1.5-14 ..... Revision 0
1.5-15 ..... Revision 0
1.5-16 ..... Revision 0
1.5-17 ..... Revision 3
1.5-18 ..... Revision 0
1.5-19 ..... Revision 0
1.5-20 ..... Revision 0
1.5-21 ..... Revision 6
1.5-22 ..... Revision 4
1.5-23 ..... Revision 0

List of Effective Pages (continued)

1.5-24 ..... Revision 0
1.5-25 ..... Revision 0
1.5-26 ..... Revision 0
1.5-27 ..... Revision 3
1.5-28 ..... Revision 0
1.5-29 ..... Revision 0
1.5-30 ..... Revision 0
1.5-31 ..... Revision 0
1.5-32 ..... Revision 0
1.5-33 ..... Revision 3
1.5-34 ..... Revision 5
1.5-35 ..... Revision 0
1.5-36 ..... Revision 3
1.5-37 ..... Amendment 2
1.5-38 ..... Revision 3
1.5-39 ..... Revision 0
1.5-40 ..... Revision 0
1.5-41 ..... Revision 0
1.5-42 ..... Revision 0
1.5-43 ..... Revision 0
1.5-44 ..... Revision 6
1.5-45 ..... Revision 0
1.5-46 ..... Revision 0
1.5-47 ..... Revision 3
1.5-48 ..... Revision 3
1.5-49 ..... Revision 0
1.5-50 ..... Revision 0
1.5-51 ..... Revision 0
1.5-52 ..... Revision 0
1.5-53 ..... Revision 0
1.5-54 ..... Revision 0
1.6-1 ..... Revision 3
1.6-2 ..... Revision 3
1.7-1 ..... Revision 3
1.7-2 ..... Revision 4
1.7-3 ..... Revision 4
1.8-1 ..... Revision 6
1.8-2 ..... Revision 5

31 drawings (see Section 1.8)

Chapter 2

2-i ..... Revision 3
2-ii ..... Revision 6
2-iii ..... Revision 3
2-iv ..... Revision 3
2-1 ..... Revision 0
2-2 ..... Revision 5
2-3 ..... Revision 3
2.1-1 ..... Revision 5
2.1.1-1 ..... Revision 3
2.1.1-2 ..... Revision 5
2.1.1-3 ..... Revision 3
2.1.2-1 ..... Revision 3
2.1.2-2 ..... Revision 4
2.1.2-3 ..... Revision 3
2.1.3-1 ..... Revision 3
2.1.3-2 ..... Revision 3
2.1.3-3 ..... Revision 4
2.1.3-4 ..... Revision 3
2.1.3-5 ..... Revision 3
2.1.3-6 ..... Revision 3
2.1.3-7 ..... Revision 3
2.1.3-8 ..... Revision 3
2.1.3-9 ..... Revision 5
2.1.3-10 ..... Revision 3
2.1.3-11 ..... Revision 3
2.1.3-12 ..... Revision 3
2.1.3-13 ..... Revision 3
2.1.3-14 ..... Revision 3
2.2-1 ..... Amendment 1
2.2-2 ..... Revision 0
2.2-3 ..... Revision 0
2.2-4 ..... Revision 5

List of Effective Pages (continued)

2.2-5 ..... Revision 3
2.2-6 ..... Revision 0
2.2-7 ..... Revision 0
2.2-8 ..... Revision 0
2.2-9 ..... Revision 0
2.2-10 ..... Revision 0
2.2-11 ..... Revision 3
2.3-1 ..... Amendment 2
2.3-2 ..... Amendment 2
2.3-3 ..... Revision 3
2.3-4 ..... Revision 3
2.3-5 ..... Revision 6
2.3-6 ..... Revision 6
2.3-7 ..... Revision 0
2.3-8 ..... Revision 3
2.3-9 ..... Revision 3
2.3-10 ..... Revision 0
2.3-11 ..... Revision 5
2.3-12 ..... Revision 3
2.3-13 ..... Revision 3
2.3-14 ..... Revision 3
2.3-15 ..... Revision 3
2.3-16 ..... Revision 3
2.3-17 ..... Revision 3
2.3-18 ..... Revision 3
2.3-19 ..... Revision 3
2.3-20 ..... Revision 3
2.4-1 ..... Revision 3
2.4-2 ..... Revision 0
2.4-3 ..... Revision 0
2.4-4 ..... Revision 0
2.5-1 ..... Revision 3
2.5-2 ..... Revision 3

Chapter 3

3-i ..... Revision 3
3-ii ..... Revision 3
3-iii ..... Revision 3
3-iv ..... Revision 3
3-v ..... Revision 3
3-vi ..... Revision 3
3-vii ..... Revision 3
3-viii ..... Revision 3
3.1-1 ..... Revision 3
3.1-2 ..... Revision 3
3.1-3 ..... Revision 3
3.1-4 ..... Revision 3
3.1-5 ..... Revision 3
3.1-6 ..... Revision 3
3.1-7 ..... Revision 3
3.2-1 ..... Revision 0
3.2-2 ..... Revision 3
3.2-3 ..... Revision 3
3.2-4 ..... Revision 3
3.3-1 ..... Revision 3
3.3-2 ..... Revision 3
3.3-3 ..... Revision 3
3.3-4 ..... Revision 3
3.3-5 ..... Revision 3
3.3-6 ..... Revision 3
3.3-7 ..... Revision 3
3.3-8 ..... Revision 3
3.3-9 ..... Revision 3
3.3-10 ..... Revision 3
3.3-11 ..... Revision 3
3.3-12 ..... Revision 3
3.3-13 ..... Revision 3
3.3-14 ..... Revision 3
3.3-15 ..... Revision 3
3.3-16 ..... Revision 3
3.4.1-1 ..... Amendment 2
3.4.1-2 ..... Revision 4
3.4.1-3 ..... Amendment 2
3.4.1-4 ..... Amendment 2

List of Effective Pages (continued)

3.4.1-5 ..... Revision 3
3.4.1-6 ..... Revision 4
3.4.1-7 ..... Revision 4
3.4.1-8 ..... Revision 4
3.4.1-9 ..... Revision 3
3.4.1-10 ..... Revision 3
3.4.1-11 ..... Revision 3
3.4.1-12 ..... Revision 3
3.4.2-1 ..... Revision 0
3.4.2-2 ..... Revision 4
3.4.3-1 ..... Revision 4
3.4.3-2 ..... Revision 3
3.4.3-3 ..... Revision 3
3.4.3-4 ..... Revision 0
3.4.3-5 ..... Revision 3
3.4.3-6 ..... Revision 3
3.4.3-7 ..... Revision 3
3.4.3-8 ..... Revision 3
3.4.3-9 ..... Revision 3
3.4.3-10 ..... Revision 3
3.4.3-11 ..... Revision 3
3.4.3-12 ..... Revision 3
3.4.3-13 ..... Revision 3
3.4.3-14 ..... Revision 3
3.4.3-15 ..... Revision 3
3.4.3-16 ..... Revision 3
3.4.3-17 ..... Revision 3
3.4.3-18 ..... Revision 3
3.4.3-19 ..... Revision 3
3.4.3-20 ..... Revision 3
3.4.3-21 ..... Revision 3
3.4.3-22 ..... Revision 3
3.4.3-23 ..... Revision 6
3.4.3-24 ..... Revision 6
3.4.3-25 ..... Revision 6
3.4.3-26 ..... Revision 6
3.4.3-27 ..... Revision 3
3.4.3-28 ..... Revision 4
3.4.3-29 ..... Revision 3
3.4.3-30 ..... Revision 3
3.4.3-31 ..... Revision 3
3.4.3-32 ..... Revision 3
3.4.3-33 ..... Revision 3
3.4.3-34 ..... Revision 3
3.4.3-35 ..... Revision 3
3.4.3-36 ..... Revision 3
3.4.3-37 ..... Revision 3
3.4.3-38 ..... Revision 3
3.4.3-39 ..... Revision 3
3.4.3-40 ..... Revision 3
3.4.3-41 ..... Revision 3
3.4.3-42 ..... Revision 3
3.4.3-43 ..... Revision 3
3.4.3-44 ..... Revision 3
3.4.3-45 ..... Revision 3
3.4.3-46 ..... Revision 3
3.4.3-47 ..... Revision 3
3.4.3-48 ..... Revision 3
3.4.3-49 ..... Revision 3
3.4.3-50 ..... Revision 3
3.4.3-51 ..... Revision 3
3.4.3-52 ..... Revision 3
3.4.3-53 ..... Revision 3
3.4.3-54 ..... Revision 3
3.4.3-55 ..... Revision 3
3.4.3-56 ..... Revision 3
3.4.3-57 ..... Revision 3
3.4.3-58 ..... Revision 3
3.4.3-59 ..... Revision 3
3.4.3-60 ..... Revision 3
3.4.3-61 ..... Revision 3
3.4.3-62 ..... Revision 3
3.4.3-63 ..... Revision 3
3.4.3-64 ..... Revision 3

List of Effective Pages (continued)

3.4.3-65 ..... Revision 3
3.4.3-66 ..... Revision 3
3.4.3-67 ..... Revision 3
3.4.3-68 ..... Revision 3
3.4.3-69 ..... Revision 3
3.4.3-70 ..... Revision 3
3.4.3-71 ..... Revision 3
3.4.3-72 ..... Revision 3
3.4.3-73 ..... Revision 3
3.4.3-74 ..... Revision 3
3.4.3-75 ..... Revision 3
3.4.3-76 ..... Revision 3
3.4.3-77 ..... Revision 3
3.4.3-78 ..... Revision 3
3.4.3-79 ..... Revision 3
3.4.3-80 ..... Revision 3
3.4.3-81 ..... Revision 3
3.4.3-82 ..... Revision 3
3.4.3-83 ..... Revision 3
3.4.3-84 ..... Revision 3
3.4.3-85 ..... Revision 3
3.4.3-86 ..... Revision 3
3.4.3-87 ..... Revision 3
3.4.3-88 ..... Revision 3
3.4.3-89 ..... Revision 3
3.4.3-90 ..... Revision 3
3.4.3-91 ..... Revision 3
3.4.3-92 ..... Revision 3
3.4.3-93 ..... Revision 3
3.4.3-94 ..... Revision 3
3.4.3-95 ..... Revision 3
3.4.3-96 ..... Revision 3
3.4.3-97 ..... Revision 3
3.4.3-98 ..... Revision 3
3.4.4-1 ..... Revision 0
3.4.4-2 ..... Revision 3
3.4.4-3 ..... Revision 3
3.4.4-4 ..... Revision 3
3.4.4-5 ..... Revision 3
3.4.4-6 ..... Revision 3
3.4.4-7 ..... Revision 3
3.4.4-8 ..... Revision 0
3.4.4-9 ..... Revision 3
3.4.4-10 ..... Revision 0
3.4.4-11 ..... Revision 3
3.4.4-12 ..... Revision 3
3.4.4-13 ..... Revision 3
3.4.4-14 ..... Revision 3
3.4.4-15 ..... Revision 3
3.4.4-16 ..... Revision 3
3.4.4-17 ..... Revision 3
3.4.4-18 ..... Revision 3
3.4.4-19 ..... Revision 3
3.4.4-20 ..... Revision 3
3.4.4-21 ..... Revision 0
3.4.4-22 ..... Revision 0
3.4.4-23 ..... Revision 0
3.4.4-24 ..... Revision 0
3.4.4-25 ..... Revision 0
3.4.4-26 ..... Revision 0
3.4.4-27 ..... Revision 0
3.4.4-28 ..... Revision 0
3.4.4-29 ..... Revision 0
3.4.4-30 ..... Revision 0
3.4.4-31 ..... Revision 0
3.4.4-32 ..... Revision 0
3.4.4-33 ..... Revision 0
3.4.4-34 ..... Revision 0
3.4.4-35 ..... Revision 0
3.4.4-36 ..... Revision 0
3.4.4-37 ..... Revision 0
3.4.4-38 ..... Revision 0
3.4.4-39 ..... Revision 3
3.4.4-40 ..... Revision 3

List of Effective Pages (continued)

3.4.4-41 ..... Revision 3
3.4.4-42 ..... Revision 3
3.4.4-43 ..... Revision 3
3.4.4-44 ..... Revision 3
3.4.4-45 ..... Revision 3
3.4.4-46 ..... Revision 3
3.4.4-47 ..... Revision 3
3.4.4-48 ..... Revision 3
3.4.4-49 ..... Revision 0
3.4.4-50 ..... Revision 0
3.4.4-51 ..... Revision 0
3.4.4-52 ..... Revision 3
3.4.4-53 ..... Revision 3
3.4.4-54 ..... Revision 3
3.4.4-55 ..... Revision 3
3.4.4-56 ..... Revision 3
3.4.4-57 ..... Revision 3
3.4.4-58 ..... Revision 3
3.4.4-59 ..... Revision 3
3.4.4-60 ..... Revision 3
3.4.4-61 ..... Revision 3
3.4.4-62 ..... Revision 3
3.4.4-63 ..... Revision 3
3.4.4-64 ..... Revision 3
3.4.4-65 ..... Revision 0
3.4.4-66 ..... Revision 3
3.4.4-67 ..... Revision 3
3.4.4-68 ..... Revision 3
3.4.4-69 ..... Revision 3
3.4.4-70 ..... Revision 0
3.4.4-71 ..... Revision 0
3.4.4-72 ..... Revision 0
3.4.4-73 ..... Revision 0
3.4.4-74 ..... Revision 0
3.4.4-75 ..... Revision 3
3.4.4-76 ..... Revision 3
3.4.4-77 ..... Revision 3
3.4.5-1 ..... Revision 3
3.5-1 ..... Revision 4
3.6-1 ..... Revision 3
3.6-2 ..... Revision 4
3.6-3 ..... Revision 3
3.6-4 ..... Revision 3
3.6-5 ..... Revision 3
3.6-6 ..... Amendment 1
3.6-7 ..... Revision 3
3.6-8 ..... Revision 3
3.7-1 ..... Revision 3
3.7-2 ..... Revision 3
3.7-3 ..... Revision 3
3.8-1 ..... Revision 3
3.8-2 ..... Revision 0
3.8-3 ..... Revision 0
3.8-4 ..... Revision 0
3.8-5 ..... Revision 0
3.8-6 ..... Revision 0
3.8-7 ..... Revision 0
3.8-8 ..... Revision 0
3.8-9 ..... Revision 0
3.8-10 ..... Revision 0
3.8-11 ..... Revision 0
3.8-12 ..... Revision 3
3.8-13 ..... Revision 3
3.8-14 ..... Revision 3
3.8-15 ..... Revision 3

Chapter 4

4-i ..... Revision 3
4-ii ..... Revision 3
4-iii ..... Revision 3
4-iv ..... Revision 3
4-v ..... Revision 4
4-vi ..... Revision 3
4.1-1 ..... Revision 3

List of Effective Pages (continued)

4.1-2 ..... Revision 3
4.1-3 ..... Revision 3
4.1-4 ..... Revision 0
4.1-5 ..... Revision 4
4.1-6 ..... Revision 5
4.1-7 ..... Revision 5
4.1-8 ..... Revision 5
4.2-1 ..... Revision 3
4.2-2 ..... Revision 3
4.2-3 ..... Revision 3
4.2-4 ..... Revision 0
4.2-5 ..... Revision 4
4.2-6 ..... Revision 0
4.2-7 ..... Revision 3
4.3-1 ..... Revision 3
4.3-2 ..... Revision 3
4.3-3 ..... Revision 3
4.4-1 ..... Revision 3
4.4.1-1 ..... Revision 3
4.4.1-2 ..... Revision 4
4.4.1-3 ..... Revision 3
4.4.1-4 ..... Revision 0
4.4.1-5 ..... Revision 0
4.4.1-6 ..... Revision 0
4.4.1-7 ..... Revision 0
4.4.1-8 ..... Amendment 2
4.4.1-9 ..... Revision 5
4.4.1-10 ..... Revision 3
4.4.1-11 ..... Revision 3
4.4.1-12 ..... Revision 3
4.4.1-13 ..... Revision 3
4.4.1-14 ..... Revision 3
4.4.1-15 ..... Revision 3
4.4.1-16 ..... Revision 3
4.4.1-17 ..... Revision 3
4.4.1-18 ..... Revision 3
4.4.1-19 ..... Revision 3
4.4.1-20 ..... Revision 3
4.4.1-21 ..... Revision 3
4.4.1-22 ..... Revision 3
4.4.1-23 ..... Revision 3
4.4.1-24 ..... Revision 3
4.4.1-25 ..... Revision 3
4.4.1-26 ..... Revision 3
4.4.1-27 ..... Revision 4
4.4.1-28 ..... Revision 5
4.4.1-29 ..... Revision 3
4.4.1-30 ..... Revision 4
4.4.1-31 ..... Revision 3
4.4.1-32 ..... Revision 3
4.4.1-33 ..... Revision 3
4.4.1-34 ..... Revision 3
4.4.1-35 ..... Revision 4
4.4.1-36 ..... Revision 3
4.4.1-37 ..... Revision 3
4.4.1-38 ..... Revision 4
4.4.1-39 ..... Revision 3
4.4.1-40 ..... Revision 3
4.4.1-41 ..... Revision 4
4.4.1-42 ..... Revision 4
4.4.1-43 ..... Revision 4
4.4.1-44 ..... Revision 3
4.4.1-45 ..... Revision 3
4.4.1-46 ..... Revision 3
4.4.1-47 ..... Revision 3
4.4.1-48 ..... Revision 3
4.4.1-49 ..... Revision 3
4.4.2-1 ..... Revision 0
4.4.3-1 ..... Revision 4
4.4.3-2 ..... Revision 4
4.4.3-3 ..... Revision 4
4.4.3-4 ..... Revision 4
4.4.3-5 ..... Revision 3
4.4.3-6 ..... Revision 3

List of Effective Pages (continued)

4.4.3-7 ..... Revision 3
4.4.3-8 ..... Revision 3
4.4.3-9 ..... Revision 3
4.4.3-10 ..... Revision 3
4.4.3-11 ..... Revision 3
4.4.3-12 ..... Revision 3
4.4.3-13 ..... Revision 3
4.4.3-14 ..... Revision 5
4.4.3-15 ..... Revision 5
4.4.3-16 ..... Revision 3
4.4.3-17 ..... Revision 4
4.4.3-18 ..... Revision 3
4.4.3-19 ..... Revision 3
4.4.3-20 ..... Revision 3
4.4.3-21 ..... Revision 3
4.4.3-22 ..... Revision 3
4.4.4-1 ..... Revision 0
4.4.5-1 ..... Revision 3
4.4.5-2 ..... Revision 5
4.4.5-3 ..... Revision 5
4.4.5-4 ..... Revision 3
4.4.5-5 ..... Revision 3
4.4.6-1 ..... Revision 0
4.4.7-1 ..... Revision 3
4.5-1 ..... Revision 5
4.5-2 ..... Revision 4
4.5-3 ..... Revision 4
4.5-4 ..... Amendment 2
4.5-5 ..... Revision 3
4.5-6 ..... Revision 4
4.5-7 ..... Revision 3
4.5-8 ..... Revision 3
4.5-9 ..... Revision 3
4.5-10 ..... Revision 3
4.5-11 ..... Amendment 2
4.5-12 ..... Amendment 2
4.5-13 ..... Amendment 2
4.5-14 ..... Amendment 2
4.5-15 ..... Amendment 2
4.5-16 ..... Amendment 2
4.5-17 ..... Revision 3
4.5-18 ..... Revision 3
4.5-19 ..... Revision 3
4.6-1 ..... Revision 3
4.6-2 ..... Revision 3
4.6-3 ..... Revision 0
4.6-4 ..... Revision 3

Chapter 5

5-i ..... Revision 3
5-ii ..... Revision 3
5-iii ..... Revision 3
5-iv ..... Revision 3
5-v ..... Revision 3
5-vi ..... Revision 3
5-vii ..... Revision 3
5-viii ..... Revision 3
5-ix ..... Revision 3
5.1-1 ..... Revision 3
5.1-2 ..... Revision 3
5.1-3 ..... Revision 3
5.1-4 ..... Revision 3
5.1-5 ..... Revision 3
5.1-6 ..... Revision 3
5.1-7 ..... Revision 3
5.1-8 ..... Revision 3
5.1-9 ..... Revision 3
5.1-10 ..... Revision 3
5.1-11 ..... Revision 3
5.2-1 ..... Revision 3
5.2-2 ..... Revision 3
5.2-3 ..... Revision 3
5.2-4 ..... Revision 3
5.2-5 ..... Revision 3

List of Effective Pages (continued)

5.2-6 ..... Revision 3
5.2-7 ..... Revision 3
5.2-8 ..... Revision 3
5.2-9 ..... Revision 0
5.2-10 ..... Revision 0
5.2-11 ..... Revision 3
5.2-12 ..... Revision 0
5.2-13 ..... Revision 3
5.2-14 ..... Revision 3
5.2-15 ..... Revision 3
5.2-16 ..... Revision 3
5.2-17 ..... Revision 3
5.2-18 ..... Revision 3
5.2-19 ..... Revision 3
5.2-20 ..... Revision 3
5.2-21 ..... Revision 3
5.2-22 ..... Revision 3
5.2-23 ..... Revision 0
5.2-24 ..... Revision 0
5.2-25 ..... Revision 0
5.2-26 ..... Revision 0
5.2-27 ..... Revision 0
5.2-28 ..... Revision 3
5.2-29 ..... Revision 3
5.2-30 ..... Revision 0
5.2-31 ..... Revision 0
5.2-32 ..... Revision 3
5.2-33 ..... Revision 3
5.2-34 ..... Revision 3
5.2-35 ..... Revision 3
5.3-1 ..... Revision 3
5.3-2 ..... Revision 3
5.3-3 ..... Revision 3
5.3-4 ..... Revision 3
5.3-5 ..... Revision 3
5.3-6 ..... Revision 3
5.3-7 ..... Revision 3
5.3-8 ..... Revision 3
5.3-9 ..... Revision 3
5.3-10 ..... Revision 3
5.3-11 ..... Revision 4
5.3-12 ..... Revision 4
5.3-13 ..... Revision 3
5.3-14 ..... Revision 3
5.3-15 ..... Revision 3
5.3-16 ..... Revision 3
5.3-17 ..... Revision 3
5.3-18 ..... Revision 3
5.3-19 ..... Revision 3
5.3-20 ..... Revision 3
5.3-21 ..... Revision 3
5.3-22 ..... Revision 4
5.3-23 ..... Revision 4
5.3-24 ..... Revision 3
5.3-25 ..... Revision 4
5.3-26 ..... Revision 4
5.3-27 ..... Revision 3
5.3-28 ..... Revision 3
5.3-29 ..... Revision 3
5.3-30 ..... Revision 3
5.3-31 ..... Revision 3
5.3-32 ..... Revision 3
5.4-1 ..... Revision 3
5.4-2 ..... Revision 3
5.4-3 ..... Revision 3
5.4-4 ..... Revision 3
5.4-5 ..... Revision 3
5.4-6 ..... Revision 3
5.4-7 ..... Revision 3
5.4-8 ..... Revision 3
5.4-9 ..... Revision 3
5.4-10 ..... Revision 3
5.4-11 ..... Revision 3
5.4-12 ..... Revision 3

List of Effective Pages (continued)

5.4-13 ..... Revision 3
5.4-14 ..... Revision 3
5.4-15 ..... Revision 3
5.4-16 ..... Revision 3
5.4-17 ..... Revision 3
5.4-18 ..... Revision 3
5.4-19 ..... Revision 3
5.4-20 ..... Revision 3
5.4-21 ..... Revision 3
5.4-22 ..... Revision 3
5.4-23 ..... Revision 3
5.4-24 ..... Revision 3
5.4-25 ..... Revision 3
5.4-26 ..... Revision 3
5.4-27 ..... Revision 3
5.5-1 ..... Revision 3
5.5-2 ..... Revision 3
5.5-3 ..... Revision 3
5.5-4 ..... Revision 3
5.5-5 ..... Revision 3
5.5-6 ..... Revision 3
5.5-7 ..... Revision 3
5.5-8 ..... Revision 3
5.5-9 ..... Revision 3
5.6-1 ..... Amendment 1
5.6.1-1 ..... Revision 4
5.6.1-2 ..... Amendment 1
5.6.1-3 ..... Revision 4
5.6.1-4 ..... Amendment 1
5.6.1-5 ..... Revision 4
5.6.1-6 ..... Revision 3
5.6.1-7 ..... Revision 3
5.6.1-8 ..... Revision 3
5.6.1-9 ..... Amendment 1
5.6.1-10 ..... Amendment 1
5.6.1-11 ..... Revision 3
5.6.1-12 ..... Revision 3
5.6.1-13 ..... Amendment 2
5.6.1-14 ..... Amendment 2
5.6.1-15 ..... Amendment 2
5.6.1-16 ..... Amendment 2
5.6.1-17 ..... Amendment 2
5.6.1-18 ..... Amendment 2
5.6.1-19 ..... Amendment 2
5.6.1-20 ..... Amendment 2
5.6.1-21 ..... Amendment 2
5.6.1-22 ..... Amendment 2
5.6.1-23 ..... Revision 3
5.6.1-24 ..... Revision 3
5.6.1-25 ..... Amendment 2
5.6.1-26 ..... Revision 3
5.6.1-27 ..... Revision 3
5.6.1-28 ..... Amendment 2
5.6.1-29 ..... Amendment 2
5.6.1-30 ..... Amendment 2
5.6.1-31 ..... Amendment 2
5.6.1-32 ..... Amendment 2
5.6.1-33 ..... Amendment 2
5.6.1-34 ..... Amendment 2
5.7-1 ..... Revision 0
5.7-2 ..... Revision 0
5.7-3 ..... Revision 3

Chapter 6

6-i ..... Revision 3
6-ii ..... Revision 3
6-iii ..... Revision 3
6-iv ..... Revision 3
6-v ..... Revision 3
6-vi ..... Revision 3
6-vii ..... Revision 3
6.1-1 ..... Revision 5
6.1-2 ..... Revision 3
6.1-3 ..... Revision 3

List of Effective Pages (continued)

6.1-4 ..... Revision 3
6.1-5 ..... Revision 3
6.1-6 ..... Revision 3
6.2-1 ..... Revision 5
6.2-2 ..... Revision 3
6.2-3 ..... Revision 3
6.3-1 ..... Revision 3
6.3-2 ..... Revision 3
6.3-3 ..... Revision 5
6.3-4 ..... Revision 3
6.3-5 ..... Revision 3
6.3-6 ..... Revision 3
6.3-7 ..... Revision 4
6.3-8 ..... Revision 4
6.3-9 ..... Revision 3
6.3-10 ..... Revision 3
6.3-11 ..... Revision 3
6.3-12 ..... Revision 3
6.3-13 ..... Revision 3
6.3-14 ..... Revision 3
6.3-15 ..... Revision 3
6.3-16 ..... Revision 3
6.3-17 ..... Revision 3
6.3-18 ..... Revision 3
6.4-1 ..... Revision 4
6.4-2 ..... Revision 3
6.4-3 ..... Revision 3
6.4-4 ..... Revision 3
6.4-5 ..... Revision 3
6.4-6 ..... Revision 3
6.4-7 ..... Revision 3
6.4-8 ..... Revision 3
6.4-9 ..... Revision 3
6.4-10 ..... Revision 3
6.4-11 ..... Revision 3
6.4-12 ..... Revision 3
6.4-13 ..... Revision 3
6.4-14 ..... Revision 3
6.4-15 ..... Revision 3
6.4-16 ..... Revision 3
6.4-17 ..... Revision 0
6.4-18 ..... Revision 3
6.4-19 ..... Revision 3
6.4-20 ..... Revision 3
6.4-21 ..... Revision 3
6.4-22 ..... Revision 3
6.4-23 ..... Revision 3
6.4-24 ..... Revision 3
6.4-25 ..... Revision 3
6.4-26 ..... Revision 3
6.4-27 ..... Revision 3
6.4-28 ..... Revision 3
6.4-29 ..... Revision 3
6.4-30 ..... Revision 3
6.4-31 ..... Revision 3
6.4-32 ..... Revision 3
6.4-33 ..... Revision 3
6.4-34 ..... Revision 3
6.4-35 ..... Revision 3
6.4-36 ..... Revision 3
6.4-37 ..... Revision 3
6.4-38 ..... Revision 3
6.4-39 ..... Revision 3
6.4-40 ..... Revision 3
6.5-1 ..... Revision 3
6.5-2 ..... Revision 3
6.5-3 ..... Revision 3
6.5-4 ..... Revision 3
6.5-5 ..... Revision 3
6.5-6 ..... Revision 3
6.5-7 ..... Revision 3
6.5-8 ..... Revision 3
6.5-9 ..... Revision 3
6.5-10 ..... Revision 3

List of Effective Pages (continued)

6.5-11 ..... Revision 3
6.5-12 ..... Revision 3
6.5-13 ..... Revision 3
6.5-14 ..... Revision 3
6.5-15 ..... Revision 3
6.5-16 ..... Revision 3
6.5-17 ..... Revision 3
6.5-18 ..... Revision 3
6.5-19 ..... Revision 3
6.5-20 ..... Revision 3
6.5-21 ..... Revision 3
6.5-22 ..... Revision 3
6.5-23 ..... Revision 3
6.5-24 ..... Revision 3
6.5-25 ..... Revision 3
6.5-26 ..... Revision 3
6.5-27 ..... Revision 3
6.5-28 ..... Revision 3
6.5-29 ..... Revision 3
6.5-30 ..... Revision 3
6.5-31 ..... Revision 3
6.5-32 ..... Revision 3
6.5-33 ..... Revision 3
6.5-34 ..... Revision 3
6.5-35 ..... Revision 3
6.5-36 ..... Revision 3
6.5-37 ..... Revision 3
6.5-38 ..... Revision 3
6.5-39 ..... Revision 3
6.5-40 ..... Revision 3
6.5-41 ..... Revision 3
6.5-42 ..... Revision 3
6.5-43 ..... Revision 3
6.5-44 ..... Revision 3
6.5-45 ..... Revision 3
6.5-46 ..... Revision 3
6.5-47 ..... Revision 3
6.5-48 ..... Revision 3
6.5-49 ..... Revision 3
6.6-1 ..... Amendment 2
6.6.1-1 ..... Amendment 2
6.6.1-2 ..... Amendment 2
6.6.1-3 ..... Amendment 2
6.6.1-4 ..... Revision 4
6.6.1-5 ..... Revision 4
6.6.1-6 ..... Revision 4
6.6.1-7 ..... Revision 4
6.6.1-8 ..... Revision 3
6.6.1-9 ..... Amendment 2
6.6.1-10 ..... Amendment 2
6.6.1-11 ..... Revision 3
6.6.1-12 ..... Amendment 2
6.6.1-13 ..... Amendment 2
6.6.1-14 ..... Amendment 2
6.6.1-15 ..... Revision 4
6.6.1-16 ..... Amendment 2
6.6.1-17 ..... Amendment 2
6.6.1-18 ..... Amendment 2
6.6.1-19 ..... Amendment 2
6.6.1-20 ..... Amendment 2
6.6.1-21 ..... Amendment 2
6.6.1-22 ..... Revision 3
6.6.1-23 ..... Amendment 2
6.6.1-24 ..... Amendment 2
6.7-1 ..... Revision 0
6.7-2 ..... Revision 5
6.8-1 ..... Revision 3
6.8-2 ..... Revision 0
6.8-3 ..... Revision 0
6.8-4 ..... Revision 0
6.8-5 ..... Revision 0
6.8-6 ..... Revision 0
6.8-7 ..... Revision 0
6.8-8 ..... Revision 0

List of Effective Pages (continued)

6.8-9 ..... Revision 0
6.8-10 ..... Revision 0
6.8-11 ..... Revision 0
6.8-12 ..... Revision 0
6.8-13 ..... Revision 0
6.8-14 ..... Revision 0
6.8-15 ..... Revision 0
6.8-16 ..... Revision 0
6.8-17 ..... Revision 0
6.8-18 ..... Revision 0
6.8-19 ..... Revision 0
6.8-20 ..... Revision 0
6.8-21 ..... Revision 0
6.8-22 ..... Revision 0
6.8-23 ..... Revision 0
6.8-24 ..... Revision 0
6.8-25 ..... Revision 0
6.8-26 ..... Revision 0
6.8-27 ..... Revision 0
6.8-28 ..... Revision 0
6.8-29 ..... Revision 0
6.8-30 ..... Revision 0
6.8-31 ..... Revision 0
6.8-32 ..... Revision 0
6.8-33 ..... Revision 0
6.8-34 ..... Revision 0
6.8-35 ..... Revision 0
6.8-36 ..... Revision 0
6.8-37 ..... Revision 0
6.8-38 ..... Revision 0
6.8-39 ..... Revision 0
6.8-40 ..... Revision 0
6.8-41 ..... Revision 0
6.8-42 ..... Revision 0
6.8-43 ..... Revision 0
6.8-44 ..... Revision 0
6.8-45 ..... Revision 0
6.8-46 ..... Revision 0
6.8-47 ..... Revision 0
6.8-48 ..... Revision 0
6.8-49 ..... Revision 0
6.8-50 ..... Revision 0
6.8-51 ..... Revision 0
6.8-52 ..... Revision 3
6.8-53 ..... Revision 3
6.8-54 ..... Revision 3
6.8-55 ..... Revision 3
6.8-56 ..... Revision 3
6.8-57 ..... Revision 3
6.8-58 ..... Revision 3
6.8-59 ..... Revision 3
6.8-60 ..... Revision 3
6.8-61 ..... Revision 3
6.8-62 ..... Revision 3
6.8-63 ..... Revision 3
6.8-64 ..... Revision 3
6.8-65 ..... Revision 3
6.8-66 ..... Revision 3

Chapter 7

7-i ..... Revision 4
7-ii ..... Revision 4
7.1-1 ..... Revision 3
7.1-2 ..... Revision 4
7.1-3 ..... Revision 4
7.1-4 ..... Revision 4
7.1-5 ..... Revision 4
7.1-6 ..... Revision 4
7.1-7 ..... Revision 4
7.1-8 ..... Revision 4
7.1-9 ..... Revision 4
7.2-1 ..... Revision 3
7.2-2 ..... Revision 0
7.3-1 ..... Revision 0

List of Effective Pages (continued)

7.4-1 ..... Revision 3
7.5-1 ..... Revision 4

Chapter 8

8-i ..... Amendment 1
8-ii ..... Revision 5
8-1 ..... Revision 5
8-2 ..... Revision 5
8.1-1 ..... Revision 5
8.1.1-1 ..... Revision 5
8.1.1-2 ..... Revision 5
8.1.1-3 ..... Revision 4
8.1.1-4 ..... Revision 5
8.1.1-5 ..... Revision 5
8.1.1-6 ..... Revision 5
8.1.1-7 ..... Revision 5
8.1.1-8 ..... Revision 5
8.1.1-9 ..... Revision 5
8.1.1-10 ..... Revision 5
8.1.1-11 ..... Revision 6
8.1.2-1 ..... Revision 5
8.1.2-2 ..... Revision 5
8.1.3-1 ..... Revision 5
8.1.3-2 ..... Revision 6
8.2-1 ..... Revision 6
8.2-2 ..... Revision 5
8.3-1 ..... Revision 4
8.3-2 ..... Revision 3
8.3-3 ..... Revision 3
8.3-4 ..... Revision 3
8.4-1 ..... Revision 0

Chapter 9

9-i ..... Revision 4
9.1-1 ..... Revision 4
9.1-2 ..... Revision 4
9.1-3 ..... Revision 4
9.1-4 ..... Revision 5
9.1-5 ..... Revision 4
9.1-6 ..... Revision 4
9.1-7 ..... Revision 4
9.1-8 ..... Revision 4
9.1-9 ..... Revision 4
9.1-10 ..... Revision 6
9.2-1 ..... Revision 6
9.2-2 ..... Revision 6
9.2-3 ..... Revision 6
9.3-1 ..... Revision 4
9.3-2 ..... Revision 5

Chapter 10

10-i ..... Amendment 1
10-ii ..... Revision 3
10.1-1 ..... Revision 3
10.1-2 ..... Revision 6
10.2-1 ..... Revision 3
10.2-2 ..... Revision 3
10.3-1 ..... Revision 3
10.3-2 ..... Revision 6
10.3-3 ..... Revision 6
10.3-4 ..... Revision 0
10.3-5 ..... Revision 3
10.3-6 ..... Revision 3
10.3-7 ..... Revision 0
10.3-8 ..... Revision 3
10.3-9 ..... Revision 3
10.4-1 ..... Revision 3
10.4-2 ..... Revision 3
10.4-3 ..... Revision 3
10.4-4 ..... Revision 3
10.4-5 ..... Revision 3
10.5-1 ..... Amendment 1
10.6-1 ..... Revision 0

List of Effective Pages (continued)

Chapter 11

11-i ..... Amendment 1
11-ii ..... Revision 3
11-iii ..... Revision 5
11-iv ..... Revision 3
11-v ..... Revision 3
11-vi ..... Revision 3
11-vii ..... Revision 3
11-viii ..... Revision 3
11-ix ..... Revision 3
11-x ..... Revision 3
11-1 ..... Revision 0
11.1.1-1 ..... Revision 6
11.1.1-2 ..... Revision 3
11.1.1-3 ..... Revision 0
11.1.1-4 ..... Revision 0
11.1.1-5 ..... Revision 0
11.1.1-6 ..... Revision 0
11.1.2-1 ..... Revision 6
11.1.2-2 ..... Revision 0
11.1.2-3 ..... Revision 3
11.1.3-1 ..... Revision 3
11.1.3-2 ..... Revision 3
11.1.3-3 ..... Revision 3
11.1.3-4 ..... Revision 3
11.1.3-5 ..... Revision 3
11.1.3-6 ..... Revision 3
11.1.3-7 ..... Revision 3
11.1.3-8 ..... Revision 3
11.1.3-9 ..... Revision 3
11.1.3-10 ..... Revision 3
11.1.3-11 ..... Revision 3
11.1.3-12 ..... Revision 3
11.1.3-13 ..... Revision 3
11.1.3-14 ..... Revision 3
11.1.3-15 ..... Revision 3
11.1.3-16 ..... Revision 3
11.1.4-1 ..... Revision 6
11.1.4-2 ..... Revision 6
11.1.5-1 ..... Revision 0
11.1.5-2 ..... Revision 0
11.1.6-1 ..... Amendment 1
11.2-1 ..... Amendment 1
11.2.1-1 ..... Revision 3
11.2.1-2 ..... Revision 3
11.2.1-3 ..... Revision 3
11.2.1-4 ..... Revision 3
11.2.1-5 ..... Revision 3
11.2.1-6 ..... Revision 3
11.2.1-7 ..... Revision 3
11.2.2-1 ..... Revision 0
11.2.3-1 ..... Revision 3
11.2.3-2 ..... Revision 0
11.2.4-1 ..... Revision 3
11.2.4-2 ..... Revision 3
11.2.4-3 ..... Revision 3
11.2.4-4 ..... Revision 3
11.2.4-5 ..... Revision 3
11.2.4-6 ..... Revision 3
11.2.4-7 ..... Revision 3
11.2.4-8 ..... Revision 3
11.2.4-9 ..... Revision 3
11.2.4-10 ..... Revision 3
11.2.4-11 ..... Revision 3
11.2.4-12 ..... Revision 6
11.2.4-13 ..... Revision 0
11.2.4-14 ..... Revision 0
11.2.4-15 ..... Revision 0
11.2.4-16 ..... Revision 0
11.2.4-17 ..... Revision 0
11.2.4-18 ..... Revision 0
11.2.4-19 ..... Revision 0
11.2.4-20 ..... Revision 0
11.2.4-21 ..... Revision 0

List of Effective Pages (continued)

11.2.4-22 ..... Revision 3
11.2.4-23 ..... Revision 3
11.2.4-24 ..... Revision 3
11.2.4-25 ..... Revision 3
11.2.4-26 ..... Revision 3
11.2.4-27 ..... Revision 3
11.2.5-1 ..... Revision 0
11.2.6-1 ..... Revision 3
11.2.6-2 ..... Revision 3
11.2.6-3 ..... Revision 6
11.2.6-4 ..... Revision 0
11.2.6-5 ..... Revision 3
11.2.7-1 ..... Revision 6
11.2.7-2 ..... Revision 3
11.2.8-1 ..... Revision 5
11.2.8-2 ..... Revision 0
11.2.8-3 ..... Revision 3
11.2.8-4 ..... Revision 3
11.2.8-5 ..... Revision 3
11.2.8-6 ..... Revision 5
11.2.8-7 ..... Revision 3
11.2.8-8 ..... Revision 5
11.2.8-9 ..... Revision 5
11.2.8.-10 ..... Revision 5
11.2.8-11 ..... Revision 6
11.2.8-12 ..... Revision 6
11.2.9-1 ..... Revision 0
11.2.9-2 ..... Revision 3
11.2.9-3 ..... Revision 3
11.2.9-4 ..... Revision 3
11.2.9-5 ..... Revision 6
11.2.9-6 ..... Revision 3
11.2.9-7 ..... Revision 3
11.2.10-1 ..... Revision 0
11.2.10-2 ..... Revision 0
11.2.10-3 ..... Revision 0
11.2.10-4 ..... Revision 6
11.2.11-1 ..... Revision 0
11.2.11-2 ..... Revision 3
11.2.11-3 ..... Revision 3
11.2.11-4 ..... Revision 3
11.2.11-5 ..... Revision 0
11.2.11-6 ..... Revision 0
11.2.11-7 ..... Revision 0
11.2.11-8 ..... Revision 3
11.2.11-9 ..... Revision 3
11.2.11-10 ..... Revision 3
11.2.11-11 ..... Revision 3
11.2.11-12 ..... Revision 0
11.2.11-13 ..... Revision 6
11.2.11-14 ..... Revision 3
11.2.12-1 ..... Revision 0
11.2.12-2 ..... Revision 3
11.2.12-3 ..... Revision 3
11.2.12-4 ..... Revision 3
11.2.12-5 ..... Revision 3
11.2.12-6 ..... Revision 3
11.2.12-7 ..... Revision 3
11.2.12-8 ..... Revision 3
11.2.12-9 ..... Revision 3
11.2.12-10 ..... Revision 3
11.2.12-11 ..... Revision 0
11.2.12-12 ..... Revision 0
11.2.12-13 ..... Revision 3
11.2.12-14 ..... Revision 3
11.2.12-15 ..... Revision 3
11.2.12-16 ..... Revision 0
11.2.12-17 ..... Revision 0
11.2.12-18 ..... Revision 0
11.2.12-19 ..... Revision 3
11.2.12-20 ..... Revision 3
11.2.12-21 ..... Revision 0
11.2.12-22 ..... Revision 3
11.2.12-23 ..... Revision 0

List of Effective Pages (continued)

11.2.12-24 ..... Revision 3
11.2.12-25 ..... Revision 3
11.2.12-26 ..... Revision 3
11.2.12-27 ..... Revision 3
11.2.12-28 ..... Revision 3
11.2.12-29 ..... Revision 3
11.2.12-30 ..... Revision 3
11.2.12-31 ..... Revision 3
11.2.12-32 ..... Revision 3
11.2.12-33 ..... Revision 3
11.2.12-34 ..... Revision 3
11.2.12-35 ..... Revision 3
11.2.12-36 ..... Revision 3
11.2.12-37 ..... Revision 3
11.2.12-38 ..... Revision 3
11.2.12-39 ..... Revision 3
11.2.12-40 ..... Revision 3
11.2.12-41 ..... Revision 3
11.2.12-42 ..... Revision 3
11.2.12-43 ..... Revision 3
11.2.12-44 ..... Revision 3
11.2.12-45 ..... Revision 3
11.2.12-46 ..... Revision 3
11.2.12-47 ..... Revision 3
11.2.12-48 ..... Revision 3
11.2.12-49 ..... Revision 3
11.2.12-50 ..... Revision 3
11.2.12-51 ..... Revision 3
11.2.12-52 ..... Revision 3
11.2.12-53 ..... Revision 3
11.2.12-54 ..... Revision 3
11.2.12-55 ..... Revision 3
11.2.12-56 ..... Revision 3
11.2.12-57 ..... Revision 3
11.2.12-58 ..... Revision 3
11.2.12-59 ..... Revision 3
11.2.12-60 ..... Revision 3
11.2.12-61 ..... Revision 3
11.2.12-62 ..... Revision 3
11.2.12-63 ..... Revision 3
11.2.12-64 ..... Revision 3
11.2.12-65 ..... Revision 3
11.2.12-66 ..... Revision 3
11.2.12-67 ..... Revision 3
11.2.12-68 ..... Revision 3
11.2.12-69 ..... Revision 3
11.2.12-70 ..... Revision 3
11.2.12-71 ..... Revision 6
11.2.13-1 ..... Revision 6
11.2.13-2 ..... Revision 6
11.2.13-3 ..... Revision 0
11.2.14-1 ..... Revision 3
11.2.14-2 ..... Revision 3
11.2.15-1 ..... Revision 3
11.2.15-2 ..... Revision 3
11.2.15-3 ..... Amendment 1
11.2.15-4 ..... Amendment 2
11.2.15-5 ..... Amendment 2
11.2.15-6 ..... Amendment 1
11.2.15-7 ..... Amendment 1
11.2.15-8 ..... Amendment 1
11.2.15-9 ..... Amendment 1
11.2.15-10 ..... Amendment 1
11.2.15-11 ..... Amendment 1
11.2.15-12 ..... Amendment 1
11.2.15-13 ..... Amendment 1
11.2.15-14 ..... Revision 3
11.2.15-15 ..... Revision 3
11.2.15-16 ..... Revision 3
11.2.15-17 ..... Revision 3
11.2.15-18 ..... Amendment 1
11.2.15-19 ..... Amendment 1
11.2.15-20 ..... Amendment 1
11.2.15-21 ..... Amendment 1

List of Effective Pages (continued)

11.2.15-22 ..... Amendment 1
11.2.15-23 ..... Amendment 2
11.2.15-24 ..... Amendment 2
11.2.15-25 ..... Revision 4
11.2.15-26 ..... Amendment 2
11.2.15-27 ..... Amendment 1
11.2.15-28 ..... Amendment 2
11.2.15-29 ..... Revision 4
11.2.15-30 ..... Revision 3
11.2.15-31 ..... Revision 3
11.2.15-32 ..... Revision 4
11.2.15-33 ..... Amendment 2
11.2.15-34 ..... Amendment 2
11.2.15-35 ..... Amendment 2
11.3-1 ..... Revision 3
11.3-2 ..... Revision 0
11.3-3 ..... Revision 0
11.3-4 ..... Revision 3
11.3-5 ..... Revision 3

Chapter 12

12-i ..... Amendment 1
12-ii ..... Amendment 1
12-1 ..... Revision 5
12-2 ..... Revision 3
12-3 ..... Revision 5
12-4 ..... Revision 3
12A-1 ..... Revision 3
12A-2 ..... Revision 3
12B-1 ..... Revision 3
12B-2 ..... Revision 3
12C-1 ..... Revision 0
12C-2 ..... Revision 5
12C1-1 ..... Revision 3
12C2-1 ..... Revision 3
12C2-2 ..... Revision 3
12C3-1 ..... Revision 0
12C3-2 ..... Revision 0
12C3-3 ..... Revision 0
12C3-4 ..... Revision 0
12C3-5 ..... Revision 0
12C3-6 ..... Revision 0
12C3-7 ..... Revision 0
12C3-8 ..... Revision 0
12C3-9 ..... Revision 5
12C3-10 ..... Revision 5
12C3-11 ..... Revision 5
12C3-12 ..... Revision 5
12C3-13 ..... Revision 4
12C3-14 ..... Revision 6
12C3-15 ..... Revision 5
12C3-16 ..... Revision 5
12C3-17 ..... Revision 5
12C3-18 ..... Revision 3
12C3-19 ..... Revision 5
12C3-20 ..... Revision 4
12C3-21 ..... Revision 5
12C3-22 ..... Revision 5
12C3-23 ..... Revision 5
12C3-24 ..... Revision 4
12C3-25 ..... Revision 3
12C3-26 ..... Revision 3
12C3-27 ..... Revision 5
12C3-28 ..... Revision 5
12C3-29 ..... Revision 5
12C3-30 ..... Revision 6
12C3-31 ..... Revision 5
12C3-32 ..... Revision 5
12C3-33 ..... Revision 5
12C3-34 ..... Revision 5
12C3-35 ..... Revision 5
12C3-36 ..... Revision 5
12C3-37 ..... Revision 5
12C3-38 ..... Revision 5

List of Effective Pages (continued)

12C3-39 ..... Revision 5

Chapter 13

13-i ..... Revision 0
13-ii ..... Revision 0
13.1-1 ..... Revision 0
13.1-2 ..... Revision 0
13.2-1 ..... Revision 0
13.2-2 ..... Revision 0
13.2-3 ..... Revision 0
13.2-4 ..... Revision 0
13.2-5 ..... Revision 0
13.2-6 ..... Revision 0
13.2-7 ..... Revision 0
13.2-8 ..... Revision 3
13.3-1 ..... Revision 3

THIS PAGE INTENTIONALLY LEFT BLANK

Chapter 1

Table of Contents

1.0 GENERAL DESCRIPTION 1-1

1.1 Introduction 1.1-1

1.2 General Description of the Universal Storage System 1.2-1
- 1.2.1 Universal Storage System Components 1.2-1
  - 1.2.1.1 Transportable Storage Canister 1.2-2
  - 1.2.1.2 Fuel Baskets 1.2-3
  - 1.2.1.3 Vertical Concrete Cask 1.2-6
  - 1.2.1.4 Transfer Cask 1.2-7
  - 1.2.1.5 Auxiliary Equipment 1.2-9
  - 1.2.1.6 Universal Transport Cask 1.2-11
- 1.2.2 Operational Features 1.2-12

1.3 Universal Storage System Contents 1.3-1
- 1.3.1 Design Basis Spent Fuel 1.3-1
- 1.3.2 Site Specific Spent Fuel 1.3-2
  - 1.3.2.1 Maine Yankee Site Specific Spent Fuel 1.3-3

1.4 Generic Vertical Concrete Cask Arrays 1.4-1

1.5 UMS® Universal Storage System Compliance with NUREG-1536 ..... 1.5-1

1.6 Identification of Agents and Contractors 1.6-1

1.7 References 1.7-1

1.8 License Drawings 1.8-1
- 1.8.1 License Drawings for the UMS® Universal Storage System 1.8-1
- 1.8.2 Site Specific Spent Fuel License Drawings 1.8-2

List of Figures

Figure 1.1-1 Major Components of the Universal Storage System (in Vertical Concrete Cask Loading Configuration) 1.1-3
Figure 1.1-2 Transportable Storage Canister Containing PWR Spent Fuel Basket 1.1-4
Figure 1.1-3 Transportable Storage Canister Containing BWR Spent Fuel Basket 1.1-4
Figure 1.2-1 Vertical Concrete Cask 1.2-15
Figure 1.2-2 Transfer Cask 1.2-16
Figure 1.2-3 Transport Configuration of the Universal Transport Cask 1.2-17
Figure 1.2-4 Transfer Cask and Canister Arrangement 1.2-18
Figure 1.2-5 Vertical Concrete Cask and Transfer Cask Arrangement 1.2-19
Figure 1.2-6 Major Component Configuration for Loading the Vertical Concrete Cask ... 1.2-20
Figure 1.4-1 Typical ISFSI Storage Pad Layout 1.4-2

List of Tables

Table 1-1 Terminology 1-3
Table 1.2-1 Design Characteristics of the UMS® Universal Storage System 1.2-21
Table 1.2-2 Major Physical Design Parameters of the Transportable Storage Canister 1.2-24
Table 1.2-3 Transportable Storage Canister Fabrication Specification Summary 1.2-25
Table 1.2-4 Major Physical Design Parameters of the Fuel Basket 1.2-26
Table 1.2-5 Major Physical Design Parameters of the Vertical Concrete Cask 1.2-27
Table 1.2-6 Vertical Concrete Cask Fabrication Specification Summary 1.2-28
Table 1.2-7 Major Physical Design Parameters of the Transfer Casks 1.2-29
Table 1.5-1 NUREG-1536 Compliance Matrix 1.5-2

1.2.1.5.9 Rigging and Slings

Load rated rigging attachments and slings are provided for major components. The rigging attachments are swivel hoist rings that allow attachment of the slings to the hook. All slings are commercially purchased to have adequate safety margin to meet the requirements of ANSI N14.6 and NUREG-0612. The slings include a concrete cask lid sling, concrete cask shield plug sling, canister shield lid sling, loaded canister transfer sling (also used to handle the structural lid), and a canister retaining ring sling. The appropriate rings or eye bolts are provided to accommodate each sling and component. Note: A cask user may utilize other slings, as needed, to perform the numerous required lifts of the UMS® components, provided that the slings meet all applicable safety requirements.

The transfer cask lifting yoke is specially designed and fabricated for lifting the transfer cask. It is designed to meet the requirements of ANSI N14.6 and NUREG-0612. It is designed as a special lifting device for critical loads. The transfer cask lifting yoke is initially load tested to 300 percent of the maximum service load.

1.2.1.5.10 Transfer Cask Extension

A transfer cask extension may be used to extend the operational height of a transfer cask by approximately 10 inches. This height extension allows a transfer cask designed for a specific canister class to be used with the next longer canister. The extension is stainless steel.

1.2.1.5.11 Temperature Instrumentation

The concrete casks may be equipped with temperature-monitoring equipment to measure the outlet air temperature. The Technical Specification requires either daily temperature measurements or daily visual inspection for inlet and outlet blockage to ensure the cask remains operable.

1.2.1.6 Universal Transport Cask

The Universal Transport Cask is designed to transport the Transportable Storage Canister. The canister, which may contain PWR or BWR spent fuel, is positioned in the Universal Transport Cask cavity by axial spacer(s) at the bottom of the cavity. A Class 1, 2 or 5 canister is located by one spacer. A Class 4 canister is located by four spacers. A Class 3 canister has no spacers. The

spacer(s) are required because the Universal Transport Cask cavity length is 192.5 inches, while the lengths of the canisters for different classes of fuel vary from 175.3 inches to 192.0 inches.

The transport configuration of the Universal Transport Cask is shown in Figure 1.2-3. The Universal Transport Cask is assigned 10 CFR 71 [13] Docket No. 71-9270 [3].

1.2.2 Operational Features

The principal activities associated with the use of the Universal Storage System are closing the canister and loading the canister in the concrete cask. The transfer cask is designed to meet the requirements of these operations. The transfer cask holds the canister during loading with fuel; provides biological shielding during closing of the canister; and provides the means by which the loaded canister is moved to, and installed in, the concrete cask.

The canister consists of five principal components: the canister shell (side wall and bottom); the shield lid; the vent port; the drain port (together with the vent and drain port covers); and the structural lid. A drain tube extends from the shield lid drain port to the bottom of the canister. The location of the drain and vent ports is shown in Figure 8.1.1-1. The vent and drain ports allow the draining, vacuum drying, and backfilling with helium necessary to provide a dry, inert atmosphere for the contents. The vent and drain port covers, the shield lid, the canister shell, and the joining welds form the primary confinement boundary. A secondary confinement boundary is formed over the shield lid by the structural lid and the weld that joins it to the canister shell. The primary and secondary boundaries are shown in Figures 7.1-1 and 7.1-2.

The structural lid contains the drilled and tapped holes for attachment of the swivel hoist rings used to lift the loaded canister. The drilled and tapped holes are filled with bolts or plugs to avoid collecting debris, and to preclude the possibility of radiation streaming from the holes, when the hoist rings are not installed.

The step-by-step procedures for the operation of the Universal Storage System are presented in Chapter 8.0. The following is a list of the principal activities. This list assumes that the empty canister is installed in the transfer cask for spent fuel pool loading (see Figure 1.2-4).

- Lift the transfer cask over the pool and start the flow of clean or filtered pool water to the transfer cask annulus and canister. After the annulus and canister fill, lower the cask to the bottom of the pool.

- Load the selected spent fuel assemblies into the canister and set the shield lid.
- Raise the transfer cask from the pool. Decontaminate the transfer cask exterior as it clears the pool surface. Drain the annulus. Place the transfer cask in the decontamination area.

  Note: As an alternative, some sites may choose to perform welding operations for closure of the canister in a cask loading pit with water around the canister (below the trunnions) and in the annulus. This alternative provides additional shielding during the closure operation.
- Weld the shield lid to the canister shell. Inspect and pressure test the weld. Drain the pool water from the canister. Attach the vacuum system to the drain line, and operate the system to achieve a vacuum. Verify the cavity dryness.
- Reduce the vacuum pressure and backfill with helium to 1 atmosphere. Restart the vacuum system and remove the helium. After achieving vacuum, backfill and pressurize the canister with helium to 1 atmosphere.
- Install the vent and drain port covers and weld them to the shield lid. Inspect the port cover welds. Helium leak check the shield lid to canister shell weld and port cover welds.
- Install the structural lid and weld it to the canister shell. Inspect the structural lid weld. Install the hoist rings and attach the canister lifting slings. (Note: Alternative canister lifting system designs may be utilized based on a site-specific analysis and evaluation.) Install the transfer adapter on the concrete cask.
- Lift the transfer cask to the top of the concrete cask and set it on the transfer adapter. (See Figure 1.2-5). Ensure that the bottom door hydraulic actuators are engaged.
- Attach the canister lifting slings or an alternative lifting device to the crane hook and lift the canister off of the transfer cask bottom doors.
- Open the bottom doors of the transfer cask.
- Lower the canister into the concrete cask (see Figure 1.2-6). Remove the canister lifting equipment.
- Remove the transfer cask and transfer adapter.
- Install the shield plug and lid on the concrete cask.
- Move the loaded concrete cask to the storage pad.
- Using the air pad rig set and a towing vehicle, move the concrete cask to its designated location on the storage pad.
- Perform initial surveillance verification of cask heat rejection capability.

During storage operations, the concrete cask operability is verified on a daily basis as specified in the Technical Specifications.

The removal operations are essentially the reverse of these steps, except that weld removal and cool down of the contents is required.

The auxiliary equipment needed to operate the Universal Storage System is described in Section 1.2.1.5. Other items required are miscellaneous hardware, connection hose and fittings, and hand tools typically found at a reactor site.

Figure 1.2-1 Vertical Concrete Cask

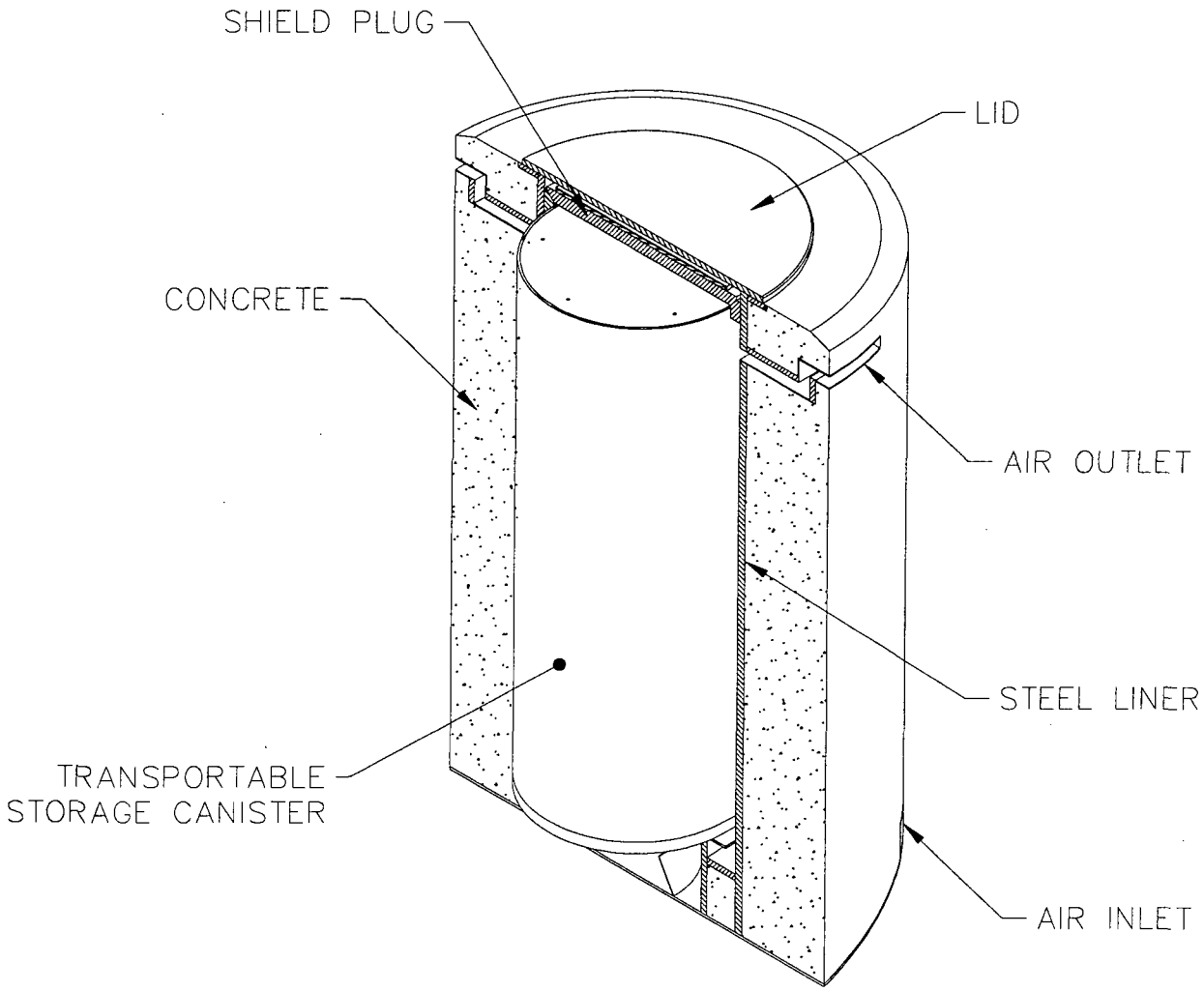

Figure 1.2-2 Transfer Cask

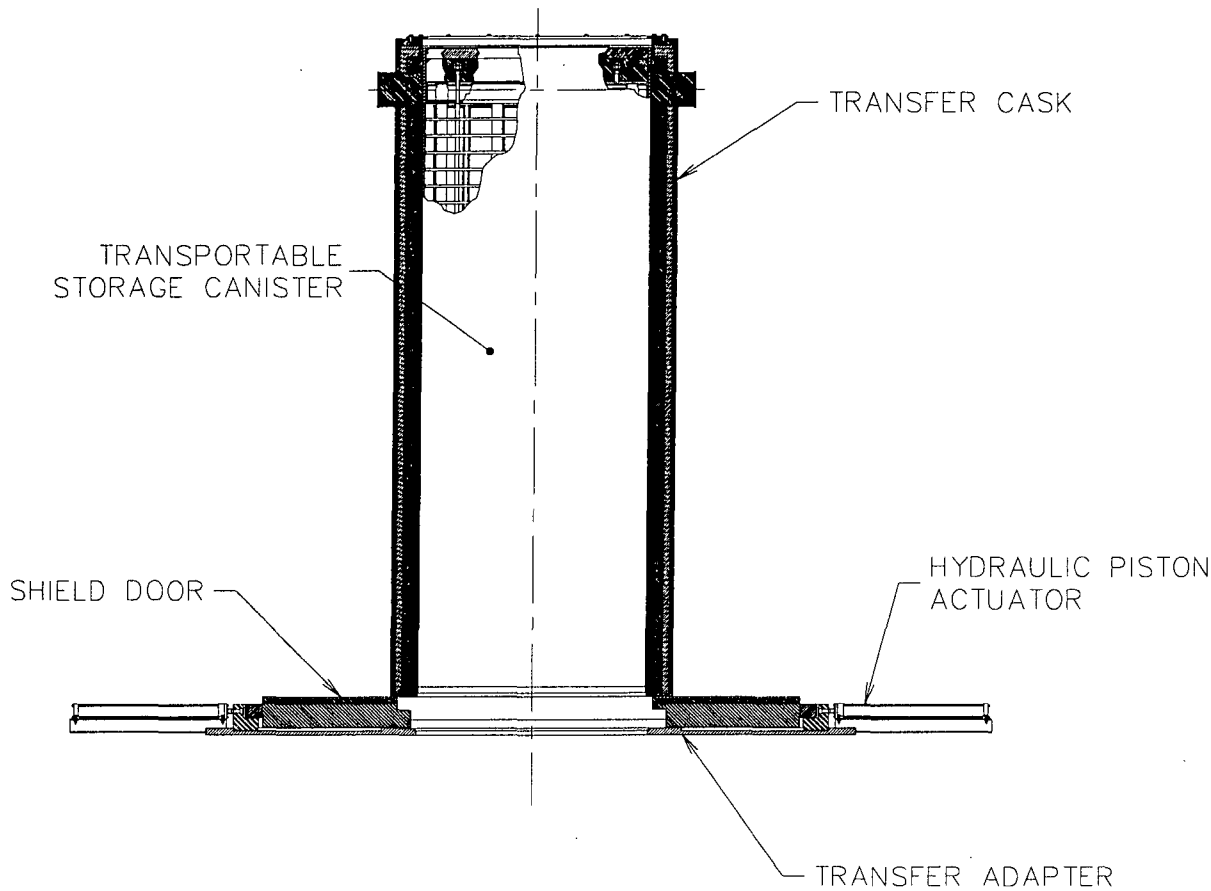

Typical Transfer Cask with Transfer Adapter

Figure 1.2-3 Transport Configuration of the Universal Transport Cask

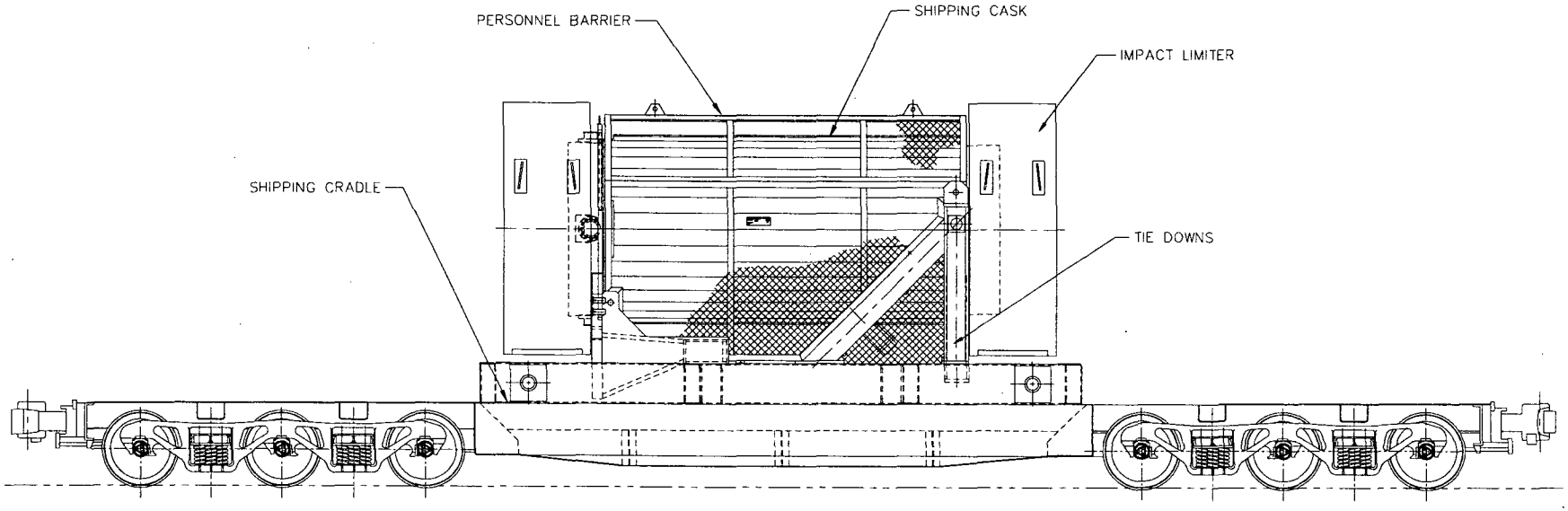

Figure 1.2-4 Transfer Cask and Canister Arrangement

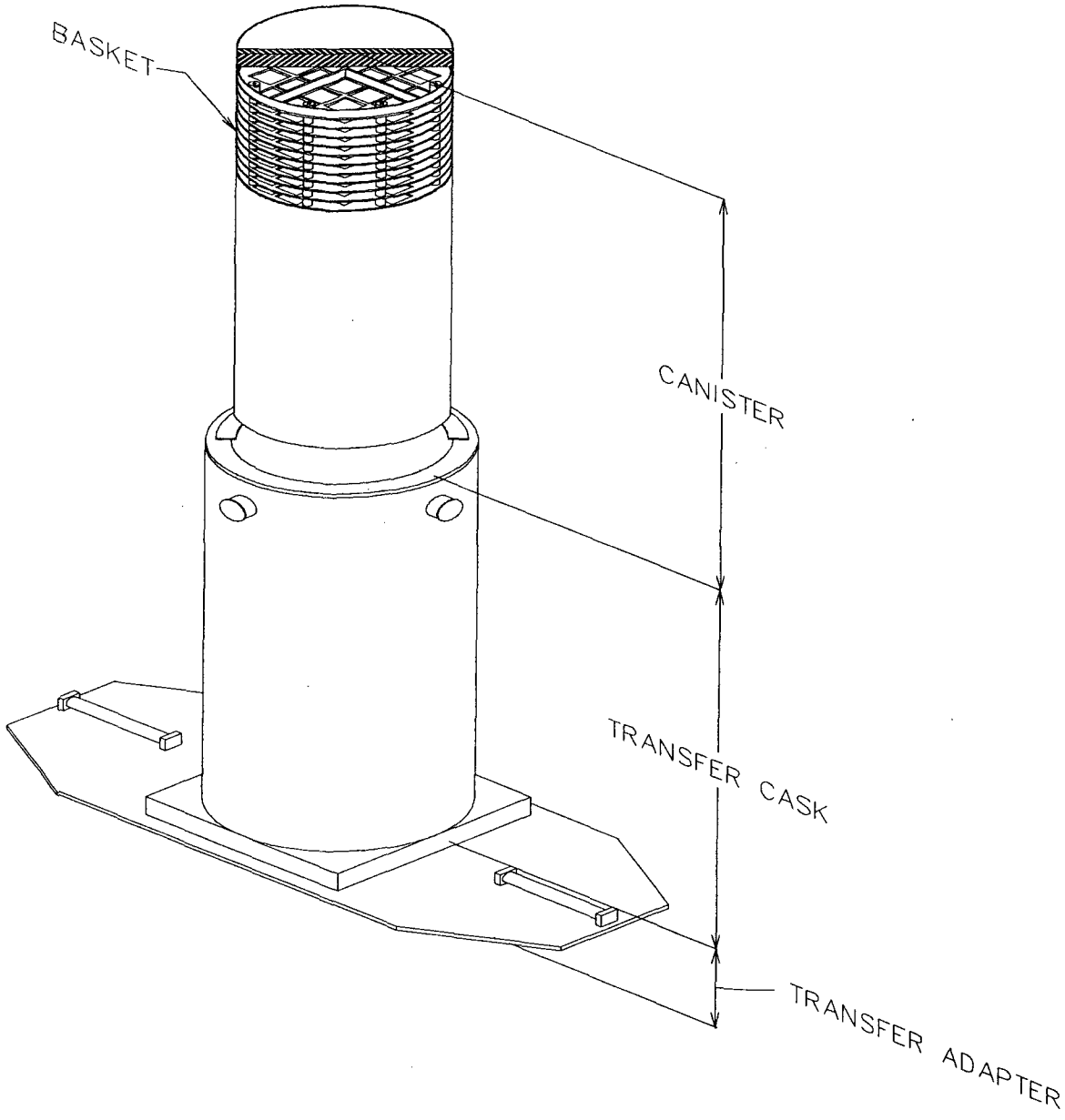

Figure 1.2-5 Vertical Concrete Cask and Transfer Cask Arrangement

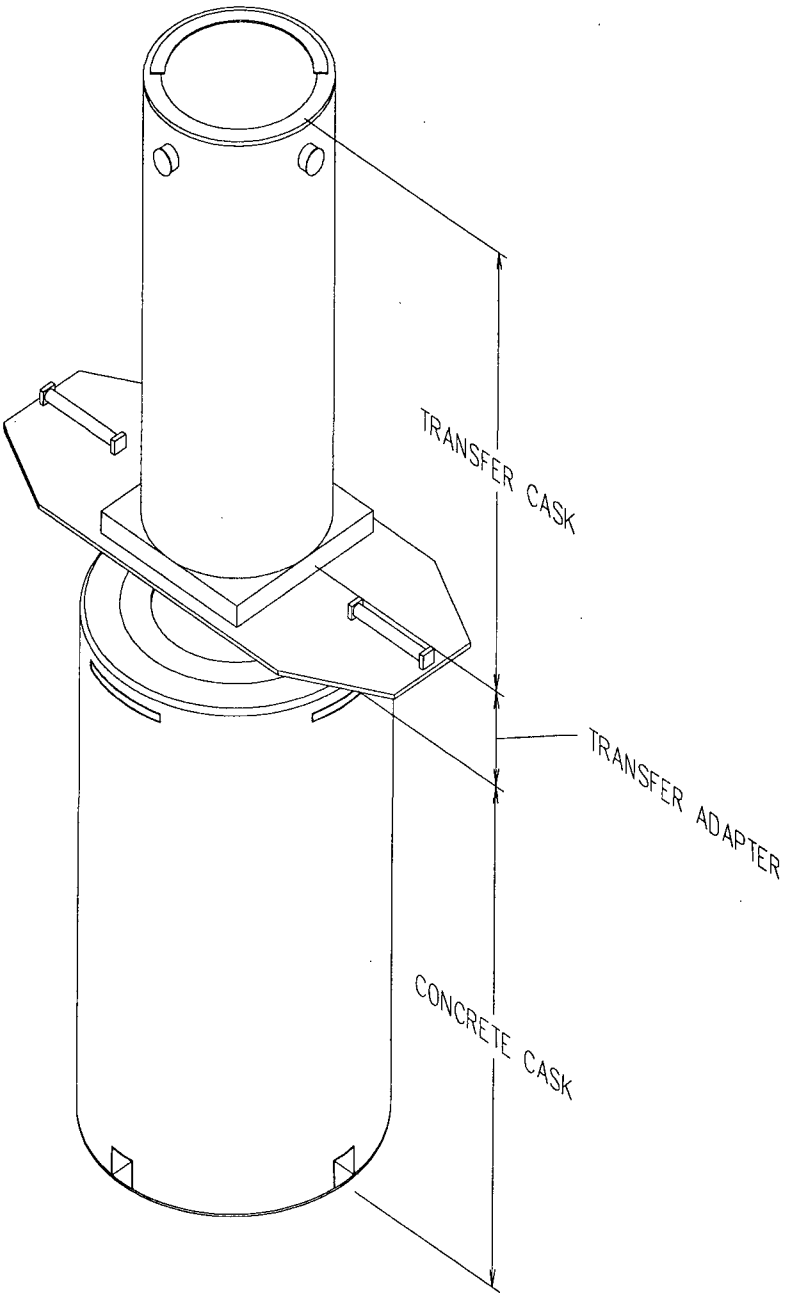

Figure 1.2-6 Major Component Configuration for Loading the Vertical Concrete Cask

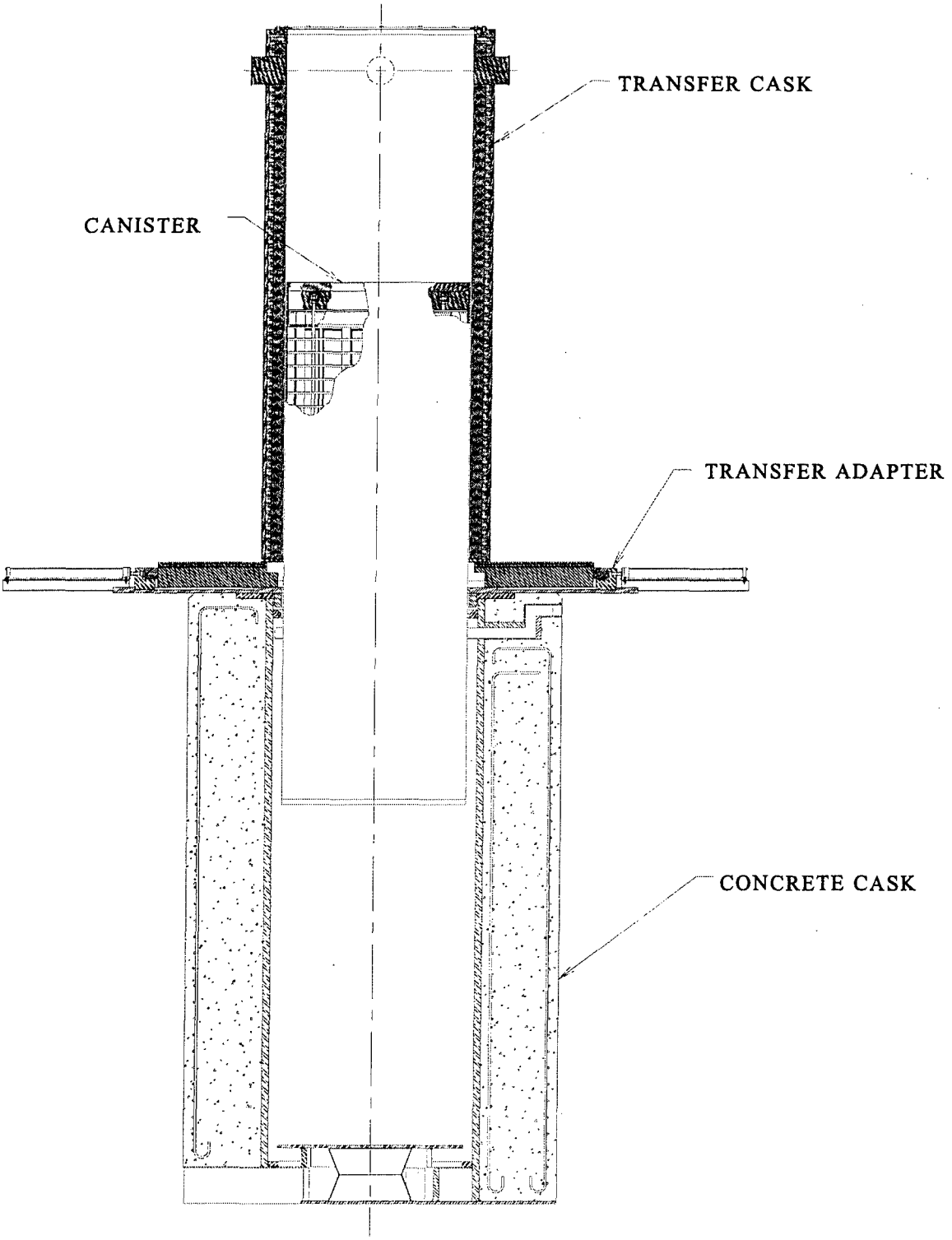

Table 1.2-1 Design Characteristics of the UMS® Universal Storage System

Design Characteristic	Value (in.)	Material
Transportable Storage Canister		
Shell thickness	0.625	Type 304L Stainless Steel
Shell bottom thickness	1.75	Type 304L Stainless Steel
Shield lid thickness	7	Type 304 Stainless Steel
Structural lid thickness	3	Type 304L Stainless Steel
Canister Fuel Basket		
Top weldment PWR thickness	1.25	Type 304 Stainless Steel
Bottom weldment PWR thickness	1.0	Type 304 Stainless Steel
Top and bottom weldment BWR thickness	1.0	Type 304 Stainless Steel
Support disks thickness		
- PWR	0.5	Type 17-4 PH Stainless Steel
- BWR	0.625	SA-533, Type B Class 2 Carbon Steel
Heat transfer disk thickness	0.5	Type 6061-T651 Aluminum Alloy
Fuel tube dimensions		
- PWR (inside)	8.8 × 8.8	Type 304 Stainless Steel Enclosing neutron absorber
- BWR Standard (inside)	5.9 × 5.9	Type 304 Stainless Steel Enclosing neutron absorber
- BWR Over-Sized Fuel (inside)	6.05 × 6.05	Type 304 Stainless Steel Enclosing neutron absorber
Spacer(s) diameter	2.875	Type 304 Stainless Steel
Tie rod diameter		
- PWR	1-5/8	Type 304 Stainless Steel
- BWR	1-5/8	Type 304 Stainless Steel

Table 1.2-1 Design Characteristics of the UMS® Universal Storage System (Continued)

Design Characteristic	Value (in.)	Material
Standard and Advanced Transfer Cask		
Outer Shell	1.25 × 85.3 dia.	ASTM A588 Low Alloy Steel
Inner Shell	0.75 × 67.8 dia.	ASTM A588 Low Alloy Steel
Retaining Ring	0.75 × 77.1 dia.	ASTM A588 Low Alloy Steel
Trunnions	10.0 dia.	A350 LF2 Low Alloy Steel
Bottom Plate	1.0 thick plate	ASTM A588 Low Alloy Steel
Top Plate	2.0 thick plate	ASTM A588 Low Alloy Steel
Shield Doors	9.0 thick	A350 LF2 Low Alloy Steel and NS-4-FR
Door Rails	9.4 × 6.5	A350 LF2 Low Alloy Steel
Gamma Shield	4.0 thick	ASTM B29, Chemical Copper Grade Lead
Neutron Shield	2.75 thick	NS-4-FR, Solid Synthetic Polymer
Transfer Adapter		
Base Plate	2.0 thick plate	ASTM A36 Carbon Steel
Locating Ring	2.75 wide × 73.75	ASTM A36 Carbon Steel

Table 1.2-1 Design Characteristics of the UMS® Universal Storage System (Continued)

Design Characteristic	Value (in.)	Material
Vertical Concrete Cask		
Weldment Structure		
Shell	2.5 thick × 79.50 dia	ASTM A36 Carbon Steel
Top Flange	2.0 thick × 101.40 dia.	ASTM A36 Carbon Steel
Support Ring	2.5 thick × 74.50 dia.	ASTM A36 Carbon Steel
Base Plate	2.0 thick × 67.50 dia.	ASTM A36 Carbon Steel
Concrete Cask		
Concrete Shell	28.3 thick × 136 dia.	Type II Portland Cement
Shield Plug (NS-4-FR)	5.13 × 74.0 dia.	ASTM A36 Carbon Steel and NS-4-FR
Shield Plug (NS-3)	5.63 × 74.0 dia.	ASTM A36 Carbon Steel and NS-3
Cask Lid	1.50 thick × 85.6 dia.	ASTM A36 Carbon Steel
Rebar	Various Lengths	ASTM A615, GR 60, ASTM A615, GR75, and A-706 Carbon Steel

Table 1.2-2 Major Physical Design Parameters of the Transportable Storage Canister

Canister Parameter	Value
Canister Shell	
Outside Diameter (in.)	67.1
Thickness (in.)	0.625
Overall Length (in.)	
Class 1 (PWR)	175.1
Class 2 (PWR)	184.2
Class 3 (PWR)	191.8
Class 4 (BWR)	185.6
Class 5 (BWR)	190.4
Capacity (No. of fuel assemblies)	
Classes 1 – 3 (PWR)	24
Classes 4 – 5 (BWR)	56
Maximum Heat Load (kW)	
PWR	23.0
BWR	23.0
Maximum Long-Term Fuel Cladding Temperature – 5-year cooled fuel (°F [°C])	
Classes 1 – 3 (PWR)	752 (400)
Classes 4 – 5 (BWR)	752 (400)
Internal Atmosphere	Helium

Table 1.2-3 Transportable Storage Canister Fabrication Specification Summary

Materials

- All material shall be in accordance with the referenced drawings and meet the applicable ASME code sections.

Welding

- All welds shall be in accordance with the referenced drawings.
- All filler metals shall be appropriate ASME materials.
- All welders and welding operators shall be qualified in accordance with ASME Section IX [14].
- All welding procedures shall be written and qualified in accordance with ASME Section IX.
- All welds specified to be visually examined shall be examined as specified in ASME Section V, Article 9 with acceptance per ASME Code Section VIII [15], UW-35 and UW-36.
- All welds specified to be dye penetrant examined shall be examined in accordance with the requirements of ASME Section V, Article 6, with acceptance in accordance with ASME Section III, NB-5350.
- All personnel performing examinations shall be qualified in accordance with the NAC International Quality Assurance program and SNT-TC-1A [16].
- All welds specified to be radiographed shall be examined in accordance with the requirements of ASME Code Section V, Article 2, with acceptance per ASME Code Section III, NB 5320.
- All welds specified to be ultrasonically examined shall be examined per ASME Code Section V, Article 5, with acceptance per ASME Code Section III, NB-5330.

Fabrication

- All cutting, welding, and forming shall be in accordance with ASME Code Section III, NB-4000 unless otherwise specified. Code stamping is not required.
- All surfaces shall be cleaned to a surface cleanness classification C or better as defined in ANSI N45.2.1 [17], Section 2.
- All fabrication tolerances shall meet the requirements of the referenced drawings after fabrication.
- Fit-up testing of a "dummy" fuel assembly into each fuel tube and insertion of the completed basket into the canister shell is required. Verification of the basket overall length and diameter is required.

Packaging

- Packaging and shipping shall be in accordance with ANSI N45.2.2 [18].

Quality Assurance

- The canister shall be fabricated under a quality assurance program that meets 10 CFR 72 Subpart G and 10 CFR 71 Subpart H.
- The supplier's quality assurance program must be accepted by the licensee prior to initiation of work.
- A Certificate of Conformance shall be issued by the fabricator stating that the canister meets the specifications and drawings.

Table 1.2-4 Major Physical Design Parameters of the Fuel Basket

Basket Parameter	Value
Basket Assembly Length, in.	
Class 1 (PWR)	162.6
Class 2 (PWR)	171.7
Class 3 (PWR)	179.3
Class 4 (BWR)	173.1
Class 5 (BWR)	177.9
Basket Assembly Diameter, in.	65.5
Number of Support Disks	
Class 1 (PWR)	30
Class 2 (PWR)	32
Class 3 (PWR)	34
Class 4 (BWR)	40
Class 5 (BWR)	41
Number of Heat Transfer Disks	
Class 1 (PWR)	29
Class 2 (PWR)	31
Class 3 (PWR)	33
Class 4 (BWR)	17
Class 5 (BWR)	17
Number of Fuel Tubes	
Classes 1 – 3 (PWR)	24 (with neutron absorber on all four sides)
Classes 4 – 5 (BWR)	56 (42 with neutron absorber on two sides; 11 with neutron absorber on one side; and 3 with no neutron absorber)
Number of Tie Rods	
Classes 1 – 3 (PWR)	8
Classes 4 – 5 (BWR)	6

Table 1.2-5 Major Physical Design Parameters of the Vertical Concrete Cask

Parameter	Value
Height (in.)	
Class 1 (PWR)	209.2
Class 2 (PWR)	218.3
Class 3 (PWR)	225.9
Class 4 (BWR)	219.7
Class 5 (BWR)	224.5
Outside diameter (in.)	136.0
Nominal weight (lbs), Without Canister	
(140 pcf concrete)	223,500
Class 1 (PWR)	232,300
Class 2 (PWR)	239,700
Class 3 (PWR)	233,700
Class 4 (BWR)	238,400
Class 5 (BWR)	
Shielding (side wall)	
Concrete thickness (in.)	28.2
Steel liner thickness (in.)	2.5
Radiation dose rate (mrem/hr):	
Side surface	< 50 (average)
Top surface	<50 (average)
Air inlet/outlet	< 100 (average)
Air flow at design heat load (lb-m)/sec	1
Material of construction	
Concrete	Type II Portland Cement
Reinforcing steel	A615 Grade 60
Steel liner	A36 Carbon Steel
Service life (years)	50
Maximum concrete temperatures for normal operation (°F)	150 (bulk) 200 (local)

Table 1.2-6 Vertical Concrete Cask Fabrication Specification Summary

Note: The American Society for Testing and Materials (ASTM) approved revisions of the ASTM standards referenced in this table that are in effect at the time of product/test procurement shall be invoked in meeting FSAR requirements.

Materials

- Concrete mix shall be in accordance with the requirements of ACI 318 and ASTM C94 [19].
- Type II Portland Cement, ASTM C150 [20].
- Fine aggregate ASTM C33 [21] or C637 [22].
- Coarse aggregate ASTM C33.
- Admixtures
  - Water Reducing and Superplasticizing ASTM C494 [23].
  - Pozzolanic Admixture (Loss on Ignition 6% or less) ASTM C618 [24].
- Compressive Strength 4000 psi at 28 days.
- Specified Air Entrainment per ACI 318.
- All steel components shall be of material as specified in the referenced drawings.

Welding

- Visual inspection of all welds shall be performed to the requirements of AWS D1.1, Section 8.6.1 [25].

Construction

- A minimum of two concrete samples for each concrete cask shall be taken in accordance with ASTM C172 [26] and ASTM C31 [27] for the purpose of obtaining concrete slump, density, air entrainment, and 28-day compressive strength values. The two samples shall not be taken from the same batch or truckload.
- Test specimens shall be tested in accordance with ASTM C39 [28].
- Formwork shall be in accordance with ACI 318.
- All sidewall formwork shall remain in place in accordance with ACI 318.
- Grade, type, and details of all reinforcing steel shall be in accordance with the referenced drawings.
- Embedded items shall conform to ACI 318 and the referenced drawings.
- The placement of concrete shall be in accordance with ACI 318.
- Surface finish shall be in accordance with ACI 318.

Quality Assurance

The concrete cask shall be constructed under a quality assurance program that meets 10 CFR 72 Subpart G. The quality assurance program must be accepted by NAC International and the licensee prior to initiation of the work.

Table 1.2-7 Major Physical Design Parameters of the Transfer Casks

Parameter	Transfer Cask Configuration	
	Standard	**Advanced**
Inside Diameter (in.)	67.8	67.8
Outside Diameter (in.)	85.3	85.3
Cavity Height (nominal) (in.)		
Class 1	177.3	177.3
Class 2	186.4	186.4
Class 3	194.0	194.0
Class 4	187.8	187.8
Class 5	192.6	192.6
Empty Weight (nominal) (lbs)		
Class 1	112,300	112,300
Class 2	117,300	117,300
Class 3	121,500	121,500
Class 4	118,100	118,100
Class 5	120,700	120,700
Allowable Canister Weight	≤ 88,000	≤ 98,000

THIS PAGE INTENTIONALLY LEFT BLANK

Table 1.5-1 NUREG-1536 Compliance Matrix (continued)

Chapter 2 – Principal Design Criteria			
Area	**Requirement**	**Acceptance Criteria**	**Description of Compliance**
3. Design Criteria for Safety Protection Systems **b. Structural**	SSC that are important to safety must be designed to accommodate the combined loads of normal operations, accidents, and natural phenomena events with an adequate margin of safety. [10 CFR 72.24(c)(3), 72.122(b), and 72.122(c)] The design-basis earthquake must be equivalent to or exceed the safe shutdown earthquake of a nuclear plant at sites evaluated under 10 CFR Part 100. [10 CFR 72.102(f)] The DCSS must maintain confinement of radioactive material within the limits of 10 CFR Part 72 and Part 20, under normal, off-normal, and credible accident conditions. [10 CFR 72.236(l)] The DCSS must be designed and fabricated so that the spent fuel is maintained in a subcritical condition all under all credible normal, off-normal, and accident conditions. [10 CFR 72.124(a) and 72.236(c)] The spent fuel cladding must be protected during storage against degradation that leads to gross ruptures, or the fuel must be otherwise confined such that degradation of the fuel during storage will not pose operational safety problems with respect to its removal from storage. [10 CFR 72.122(h)(1)] Storage systems must be designed to allow ready retrieval of spent fuel waste for further processing or disposal. [10 CFR 72.122(l)]	The SAR should define how the DCSS structural components are designed to accommodate combined normal, off-normal, and accident loads, while protecting the DCSS contents from significant structural degradation, criticality, and loss of confinement, while preserving retrievability. This discussion is generally a summary of the analytical techniques and calculational results from the detailed analysis discussed in SAR Section 3 and should be presented in a non-proprietary forum.	A discussion of the structural design criteria are presented in Section 2.2. Combined loadings are addressed specifically in Section 2.2.5, and in Tables 2.2-1 and 2.2-2. The design-basis earthquake is specified in Section 2.2.3 in accordance with 10 CFR 72.102 criteria. Analyses show that the system maintains adequate margins of safety during normal (Section 3.4.4.1), off-normal (Section 11.1) and accident condition (Section 11.2) events, therefore, confinement of the radioactive material is assured. As the system maintains adequate structural margins of safety during normal, off-normal and accident condition events, criticality control is assured based on the analyses presented in Chapter 6. The maximum allowable cladding temperatures are specified in Tables 2-1 and 4.1-3. The temperature results for the fuel cladding listed in Tables 4.1-4 and 4.1-5 show that the allowable cladding temperatures are not exceeded. Therefore, the fuel cladding is protected against degradation during storage. As described in Section 1.2, the system is designed to be readily retrievable and transported off site as necessary for further processing or disposal.

Table 1.5-1 NUREG-1536 Compliance Matrix (continued)

Chapter 2 – Principal Design Criteria			
Area	**Requirement**	**Acceptance Criteria**	**Description of Compliance**
3. Design Criteria for Safety Protection Systems **c. Thermal**	Each spent fuel storage or handling system must be designed with a heat removal capability having testability and reliability consistent with its importance to safety. [10 CFR 72.128(a)(4)] The DCSS must be designed to provide adequate heat removal capacity without active cooling systems. [10 CFR 72.236(f)]	The applicant should provide a general discussion of the proposed heat removal mechanisms, including the reliability and verifiability of such mechanisms and any associated limitations. All heat removal mechanisms should be passive and independent of intervening actions under normal and off-normal conditions.	The verification of the heat removal capability of the storage system is described in Section 2.3.3.2. The reliability of the heat removal system is demonstrated in Chapter 4. Routine surveillance of the concrete cask is described in Section 2.3.3.2 to verify continuing operability. As shown by the results of the thermal evaluation of the system reported in Tables 4.1-4 and 4.1-5, the storage system provides adequate heat removal through the passive cooling design features described in Section 1.2.1.3.

Table 1.5-1 NUREG-1536 Compliance Matrix (continued)

Chapter 4 – Thermal Evaluation		
Area	**Regulatory Requirement**	**Description of Compliance**
1. Minimum Lifetime	10 CFR Part 72 requires an analysis and evaluation of DCSS thermal design and performance to demonstrate that the cask will permit safe storage of the spent fuel for a minimum of 20 years.	Section 1.1 and Table 2-1 specify a 50-year design life for the system. Tables 4.1-4 and 4.1-5 demonstrate that the system's temperatures are maintained within their allowable limits.
2. Spent Fuel Cladding Protection	The spent fuel cladding must be protected against degradation that may lead to gross ruptures.	Tables 4.1-4 and 4.1-5 demonstrate that the fuel cladding temperatures are maintained within allowable limits.
3. Thermal Structures, Systems, and Components	Thermal structures, systems, and components important to safety must be described in sufficient detail to permit evaluation of their effectiveness. Applicable thermal requirements are identified, in part, in 10 CFR 72.24(c)(3), 72.24(d), 72.122(h)(1), 72.122(l), 72.128(a)(4), 72.236(f), 72.236(g), and 72.236(h). 10 CFR 72.24(c)(3) Contents of Application: Descriptions of Components Important to Safety 10 CFR 72.24(d) Contents of Application: Margins of Safety / Mitigation of Accident Consequences 10 CFR 72.122(h)(1) Overall Requirements: Confinement Barriers and Systems 10 CFR 72.122(l) Overall Requirements: Retrievability 10 CFR 72.128(a)(4) Criteria for Spent Fuel Storage and Handling: Testable Heat Removal Capacity 10 CFR 72.236(f) Specific Requirements for Spent Fuel Storage Cask Approval: Passive Heat Removal 10 CFR 72.236(g) Specific Requirements for Spent Fuel Storage Cask Approval: Minimum 20-year Lifetime 10 CFR 72.236(h) Specific Requirements for Spent Fuel Storage Cask Approval: Wet/Dry Loading and Unloading Compatibility	The discussion of the thermal design features of the system is presented in Section 4.1. Tables 4.1-4 and 4.1-5 demonstrate that the temperatures of SSCs are maintained within allowable limits for all components of the system, including the fuel cladding. Therefore, the system is not adversely affected by normal, off-normal, or accident condition events. The temperatures of the system are maintained within allowable limits, and do not preclude retrieval of spent fuel from the system. As specified in LCO A 3.1.6, the air temperatures at the outlet vents and ISFSI ambient are measured to verify proper operation of the concrete cask's heat removal system following the start of storage operations. Section 1.1 and Table 2-1 specify a 50-year design life for the system. Tables 4.1-4 and 4.1-5 demonstrate that the system's temperatures are maintained within their allowable limits. The operating procedures for the system, presented in Chapter 8, include procedures for wet and dry loading and unloading operations. A discussion is provided for development of dry loading and unloading procedures for dry cask handling facilities.

Table 1.5-1 NUREG-1536 Compliance Matrix (continued)

Chapter 4 – Thermal Evaluation		
Area	**Acceptance Criteria**	**Description of Compliance**
1. Long-term Cladding Temperatures	Fuel cladding (zirconium alloy) temperature at the beginning of dry cask storage should generally be below the allowable temperature of 400°C (752°F) per ISG-11, Rev. 2.	As shown in Tables 4.1-4 and 4.1-5, the fuel cladding temperatures are maintained below allowable temperature limits for zirconium alloy-clad fuel as determined in accordance with ISG 11, Rev. 2.
2. Short Term Cladding Temperatures	Fuel cladding temperature should generally be maintained below 570°C (1058°F) for short-term, off-normal and accident conditions (PNL 4835). For fuel transfer operations (e.g., vacuum drying of the cask or dry transfer), the temperature should generally be maintained below 400°C (752°F). (ISG-11, Rev 2)	As shown in Tables 4.1-4 and 4.1-5, the fuel cladding temperatures are maintained below 570°C (1058°F) for short-term, off-normal and accident conditions. For transfer operations, the fuel cladding temperatures are maintained below 400°C (752°F).
3. Maximum Internal Pressure	The maximum internal pressure of the cask should remain within its design pressures for normal, off-normal, and accident conditions assuming rupture of 1 percent, 10 percent, and 100 percent of the fuel rods, respectively. Assumptions for pressure calculations include release of 100 percent of the fill gas and 30 percent of the significant radioactive gases in the fuel rods.	The maximum normal condition pressure calculation is presented in Section 4.4.5. The accident condition pressure calculation is presented in Section 11.2.1. The off-normal condition is bounded by the accident condition, which assumes 100% failure of the cladding.
4. Maximum Material Temperatures	Cask and fuel materials should be maintained within their minimum and maximum temperature criteria for normal, off-normal, and accident conditions in order to enable components to perform their intended safety functions.	Tables 4.1-4 and 4.1-5 demonstrate that the temperatures are maintained within allowable limits for all components of the system, including the fuel cladding. Therefore, the system is not adversely affected by normal, off-normal, or accident condition events.
5. Fuel Cladding Protection	The spent fuel cladding is the primary structural component that is used to ensure that the spent fuel is contained in a known geometric configuration.	As concluded in ISG-11, Rev. 2, creep under normal conditions of storage will not cause gross rupture of the cladding, and the geometric configuration of the spent fuel will be preserved provided that the maximum cladding temperature does not exceed 400°C (752°F).
6. Long-Term Cladding Damage	Creep is the dominant mechanism for cladding deformation under normal conditions of storage. The relatively high temperatures, differential pressures, and corresponding hoop stress on the cladding will result in permanent creep deformation of the cladding over time.	A temperature limit of 400°C (752°F) for normal conditions of storage and for short-term storage operations will limit cladding hoop stresses and creep and limit the amount of soluble hydrogen available to form radial hydrides. (ISG-11, Rev. 2)
7. Passive Cooling	The cask system should be passively cooled. [10 CFR 72.236(f)]	As stated in Sections 1.2 and 4.1, the system is passively cooled.
8. Thermal Operating Limits	The thermal performance of the cask should be within the allowable design criteria specified in SAR Section 2 (e.g., materials, decay heat specifications) and SAR Section 3 (e.g., thermal stress analysis) for normal, off-normal, and accident conditions.	The thermal stress analyses of the canister and Vertical Concrete Cask for normal conditions are provided in Sections 3.4.4.1.1 and 3.4.4.2.3, respectively. The system is evaluated for off-normal thermal loading in Section 11.1.2, and the system is analyzed for accident thermal loading in Sections 11.2.6, 11.2.7 and 11.2.13.

Table 1.5-1 NUREG-1536 Compliance Matrix (continued)

Chapter 11 – Accident Analysis		
Area	**Regulatory Requirement**	**Description of Compliance**
1. Credible Accident and Natural Phenomena	Structures, systems, and components (SSC) important to safety must be designed to withstand credible accidents and natural phenomena without impairing their ability to perform safety functions. [10 CFR 72.24(d)(2); 10 CFR 72.122(b)(2), (3), (d), and (g)]	Analyses of the system for a variety of postulated off-normal and accident conditions are presented in Sections 11.1 and 11.2, respectively.
2. Controlled Area Boundary Dose	During normal operations and anticipated occurrences, the annual dose equivalent to any real individual who is located beyond the controlled area must not exceed 25 mrem to the whole body, 75 mrem to the thyroid and 25 mrem to any other organ as a result of exposure to the sources listed in the regulations. [10 CFR 72.104(a); 10 CFR 72.236(d); and 10 CFR 72.24(d)]	The controlled area boundary dose calculations and minimum controlled area boundary distances under normal conditions are presented in Section 10.4.
3. Design Basis Accident Dose	Dose Limits for Design-Basis Accidents require that any individual located on or beyond the nearest boundary of the controlled area shall not receive a dose greater than 5 rem to the whole body or any organ from any design basis accident. [10 CFR 72.106(b); 10 CFR 72.24(m); and 10 CFR 72.24(d)(2)]	Section 10.2.2 indicates that the controlled area boundary dose as a result of an accident will not exceed 5 rem to any organ, exclusive of skin.
4. Criticality Control	The spent fuel must be maintained in a subcritical condition under credible conditions. [10 CFR 72.236(c) and 10 CFR 72.124(a)]	Section 6.4 presents the results of the criticality evaluation of the storage cask for the most credible reactive conditions, including the consequences of the off-normal and accident condition events evaluated in Sections 11.1 and 11.2, respectively.
5. Confinement Control	The cask and its systems important to safety must be evaluated, using appropriate tests or by other means acceptable to the Commission, to demonstrate that they will reasonably maintain confinement of radioactive material under credible accident conditions. [10 CFR 72.236(l)]	As stated in Section 7.3, the confinement system maintains its integrity for all credible off-normal and accident conditions.
6. Ready Retrieval of Spent Fuel	Storage systems must allow ready retrieval of spent fuel for further processing or disposal. [10 CFR 72.122(l)]	The off-normal and accident condition analyses presented in Sections 11.1 and 11.2 demonstrate that the spent fuel contents are protected during off-normal and accident conditions. Therefore, retrieval of the spent fuel from the system is not impacted by these postulated events.

Table 1.5-1 NUREG-1536 Compliance Matrix (continued)

Chapter 11 – Accident Analysis		
Area	**Regulatory Requirement**	**Description of Compliance**
7. Monitoring Systems	Instrumentation and control systems must be provided to monitor systems that are important to safety over anticipated ranges for normal operation and off-normal operation. Those instruments and control systems that must remain operational under accident conditions must be identified in the Safety Analysis Report. [10 CFR 72.122(i)]	Daily surveillance of the concrete cask is performed to verify continued thermal operability of the system. The confinement system is fully welded and is leak tested to leaktight criteria as specified in Appendix A, Section A3.1.5. No seal monitoring is required.
8. Surveillance	Where instrumentation and control systems are not appropriate, storage confinement systems must have the capability for continuous monitoring in a manner such that the licensee will be able to determine when corrective action needs to be taken to maintain safe storage conditions. [72.122(h)(4)]	No active, continuous monitoring systems are required. Licensee radiological monitoring programs assure ISFSI operations meet 10 CFR 72.104 and 72.106 requirements.

1.8 License Drawings

This section presents the list of License Drawings for the Universal Storage System.

1.8.1 License Drawings for the UMS® Universal Storage System

Drawing Number	Title	Revision No.	No. of Sheets
790-501	Canister/Basket Assembly Table, NAC-UMS®	3	1
790-559	Assembly, Transfer Adapter, NAC-UMS®	7	4
790-560	Assembly, Standard Transfer Cask (TFR), NAC-UMS®	17	7
790-561	Weldment, Structure, Vertical Concrete Cask (VCC), NAC-UMS®	13	4
790-562	Reinforcing Bar and Concrete Placement, Vertical Concrete Cask (VCC), NAC-UMS®	16	7
790-563	Lid, Vertical Concrete Cask (VCC), NAC-UMS®	4	1
790-564	Shield Plug, Vertical Concrete Cask (VCC), NAC-UMS®	7	3
790-565	Nameplate, Vertical Concrete Cask (VCC), NAC-UMS®	4	1
790-570	Fuel Basket Assembly, 56 Element BWR, NAC-UMS®	4	2
790-571	Bottom Weldment, Fuel Basket, 56 Element BWR, NAC-UMS®	3	1
790-572	Top Weldment, Fuel Basket, 56 Element BWR, NAC-UMS®	4	1
790-573	Support Disk and Misc. Basket Details, 56 Element BWR, NAC-UMS®	7	1
790-574	Heat Transfer Disk, Fuel Basket, 56 Element BWR, NAC-UMS®	3	1
790-575	BWR Fuel Tube, NAC-UMS®	10	2
790-581	PWR Fuel Tube, NAC-UMS®	9	2
790-582	Shell Weldment, Canister, NAC-UMS®	12	2
790-583	Assembly, Drain Tube, Canister, NAC-UMS®	8	1
790-584	Details, Canister, NAC-UMS®	19	3
790-585	Transportable Storage Canister (TSC), NAC-UMS®	19	3
790-587	Spacer Shim, Canister, NAC-UMS®	1	1
790-590	Loaded Vertical Concrete Cask (VCC), NAC-UMS®	5	2
790-591	Bottom Weldment, Fuel Basket, 24 Element PWR, NAC-UMS®	6	2

License Drawings
(Continued)

Drawing Number	Title	Revision No.	No. of Sheets
790-592	Top Weldment, Fuel Basket, 24 Element PWR, NAC-UMS®	8	1
790-593	Support Disk and Misc. Basket Details, 24 Element PWR, NAC-UMS®	7	2
790-594	Heat Transfer Disk, Fuel Basket, 24 Element PWR, NAC-UMS®	2	1
790-595	Fuel Basket Assembly, 24 Element PWR, NAC-UMS®	10	2
790-605	BWR Fuel Tube, Over-Sized Fuel, NAC-UMS®	11	2
790-613	Supplemental Shielding, VCC Inlets, NAC-UMS®	2	1
790-617	Door Stop, NAC-UMS®	3	2

1.8.2 Site Specific Spent Fuel License Drawings

Drawing Number	Title	Revision No.	No. of Sheets
412-501	Spent Fuel Can Assembly, Maine Yankee (MY), NAC-UMS®	4	2
412-502	Fuel Can Details, Maine Yankee (MY), NAC-UMS®	6	6

Figure Withheld Under 2.390

UNLESS OTHERWISE STATED	GROUP	NAME	DATE
DIMENSIONING AND TOLERANCING SHALL BE PER ASME Y14.5M-94			
ALL THREAD DEPTH CALLOUTS ARE TO BE CONSIDERED AS A MIN. DEPTH OF PERFECT THREADS	MANUFACTURING		9/20/06
	DESIGN		9/20/06
	PROJECT MANAGEMENT		9/20/06
	PROCUREMENT		9/22/06
ALL DIMENSIONS ARE IN INCHES	LICENSING		9/22/06
MACHINED SURFACES TO BE 125 OR BETTER			
NEXT ASSEMBLY: 790-562	QUALITY		9/26/06
DRAWING TYPE: LICENSE			

NAC INTERNATIONAL

WELDMENT, STRUCTURE, VERTICAL CONCRETE CASK (VCC) NAC-UMS®

PROJECT 790 | DRAWING 561 | REV 13 | SH 1 OF 4

Figure Withheld Under 2.390

NAC INTERNATIONAL

WELDMENT, STRUCTURE,
VERTICAL CONCRETE CASK (VCC)
NAC-UMS®

PROJECT 790		DRAWING 561	REV 13
SCALE 1/16	WEIGHT	SH 2 OF 4	

Figure Withheld Under 2.390

NAC INTERNATIONAL

WELDMENT, STRUCTURE, VERTICAL CONCRETE CASK (VCC) NAC-UMS®

PROJECT 790

DRAWING 561

REV 13

SH 3 OF 4

Figure withheld Under 2.390

NAC INTERNATIONAL

WELDMENT, STRUCTURE,
VERTICAL CONCRETE CASK (VCC)
NAC-UMS®

PROJECT 790 | DRAWING 561 | REV 13

SH 4 OF 4

Chapter 2

Table of Contents

2.0 PRINCIPAL DESIGN CRITERIA 2-1

2.1 Spent Fuel To Be Stored 2.1-1
2.1.1 PWR Fuel Evaluation 2.1.1-1
2.1.2 BWR Fuel Evaluation 2.1.2-1
2.1.3 Site Specific Spent Fuel 2.1.3-1
2.1.3.1 Maine Yankee Site Specific Spent Fuel 2.1.3-1

2.2 Design Criteria for Environmental Conditions and Natural Phenomena 2.2-1
2.2.1 Tornado and Wind Loadings 2.2-1
2.2.1.1 Applicable Design Parameters 2.2-1
2.2.1.2 Determination of Forces on Structures 2.2-2
2.2.1.3 Tornado Missiles 2.2-2
2.2.2 Water Level (Flood) Design 2.2-3
2.2.2.1 Flood Elevations 2.2-3
2.2.2.2 Phenomena Considered in Design Load Calculations 2.2-3
2.2.2.3 Flood Force Application 2.2-3
2.2.2.4 Flood Protection 2.2-4
2.2.3 Seismic Design 2.2-4
2.2.3.1 Input Criteria 2.2-4
2.2.3.2 Seismic - System Analyses 2.2-4
2.2.4 Snow and Ice Loadings 2.2-5
2.2.5 Combined Load Criteria 2.2-6
2.2.5.1 Load Combinations and Design Strength -Vertical Concrete Cask 2.2-6
2.2.5.2 Load Combinations and Design Strength - Canister and Basket 2.2-6
2.2.5.3 Design Strength - Transfer Cask 2.2-7
2.2.6 Environmental Temperatures 2.2-7

Table of Contents (Continued)

2.3 Safety Protection Systems 2.3-1
2.3.1 General 2.3-1
2.3.2 Protection by Multiple Confinement Barriers and Systems 2.3-2
2.3.2.1 Confinement Barriers and Systems 2.3-2
2.3.2.2 Cask Cooling 2.3-3
2.3.3 Protection by Equipment and Instrumentation Selection 2.3-3
2.3.3.1 Equipment 2.3-4
2.3.3.2 Protection by Instrumentation 2.3-5
2.3.4 Nuclear Criticality Safety 2.3-5
2.3.4.1 Control Methods for Prevention of Criticality 2.3-5
2.3.4.2 Error Contingency Criteria 2.3-7
2.3.4.3 Verification Analyses 2.3-7
2.3.5 Radiological Protection 2.3-7
2.3.5.1 Access Control 2.3-7
2.3.5.2 Shielding 2.3-8
2.3.5.3 Ventilation Off-Gas 2.3-8
2.3.5.4 Radiological Alarm Systems 2.3-9
2.3.6 Fire and Explosion Protection 2.3-10
2.3.6.1 Fire Protection 2.3-10
2.3.6.2 Explosion Protection 2.3-10
2.3.7 Ancillary Structures 2.3-10

2.4 Decommissioning Considerations 2.4-1

2.5 References 2.5-1

Any evidence of permanent deformation, cracking, galling of bearing surfaces, or unacceptable liquid penetrant examination results is cause for rejection. Any identified defects must be repaired and the load test repeated prior to final acceptance.

2.3.3.2 Protection by Instrumentation

No instrumentation is required for the safe storage operations of the UMS®. A remote temperature-monitoring system may be used to measure the outlet air temperature of the concrete casks in long-term storage. The outlet and ISFSI ambient air temperatures can be monitored daily as a check of the continuing thermal performance of the concrete cask. Alternately, a daily visual inspection for blockage and integrity of the air inlet and air outlet screens of all concrete casks may be performed. Following any natural phenomena event, such as an earthquake or tornado, the concrete casks shall be inspected for damage and air inlet and air outlet blockage.

2.3.4 Nuclear Criticality Safety

The Universal Storage System design includes features to ensure that nuclear criticality safety is maintained (i. e., the cask remains subcritical) under normal, off-normal, and accident conditions. The design of the canister and fuel basket is such that, under all conditions, the highest neutron multiplication factor (k_{eff}) is less than 0.95. The criticality evaluation for the design basis fuel is presented in Section 6.4.

2.3.4.1 Control Methods for Prevention of Criticality

Criticality control in the PWR basket is achieved using a neutron flux trap configuration. Individual fuel assemblies are surrounded by four neutron absorber sheets, one on each side of the assembly, that provide absorption of moderated neutrons. The assemblies are separated by a gap that is filled with water during hypothetical accident conditions when the canister is flooded. Fast neutrons escaping one fuel assembly are moderated in the gap between the assemblies and absorbed by the neutron absorber material surrounding the assemblies. The minimum loading of the neutron absorber sheets is 0.025 g $^{10}B/cm^2$. The sheets are mechanically supported by the fuel tube structure to ensure that the neutron absorber sheets remain in place during the design basis normal, off-normal, and accident events.

Individual fuel assemblies in the BWR basket are separated from adjacent assemblies by a single neutron absorber sheet between fuel assemblies. Of the total 56 fuel tubes, 42 tubes contain neutron absorber sheets on two sides of the tubes, 11 tubes contain neutron absorber sheets on one side, and the remaining 3 tubes contain no neutron absorber sheets. The arrangement of the fuel tubes ensures that there is at least one neutron absorber sheet between adjacent fuel assemblies. Although this configuration of water gaps and neutron absorber sheets does not form a classic neutron flux trap, the design ensures that there is sufficient absorption of moderated neutrons by the neutron absorber to maintain criticality control in the basket ($k_{eff} < 0.95$). The minimum loading of the neutron absorber sheets in the BWR fuel tubes is 0.011 g $^{10}B/cm^2$. The neutron absorber sheets are mechanically supported by the fuel tube structure to ensure that the sheets remain in place during the design basis normal, off-normal, and accident events.

The efficiency of the neutron absorber sheets in preserving nuclear criticality safety is demonstrated by the criticality results presented in Section 6.4.3.

The principal criticality design criterion is that k_{eff} remain below 0.95 under all conditions. Assumptions made in the analyses used to demonstrate conformance to this criterion include:

1. Fuel assembly with maximum ^{235}U loading (95% theoretical density);
2. 75 percent of the nominal ^{10}B loading in the neutron absorber sheet;
3. Infinite array of casks in the X-Y (horizontal) plane;
4. Infinite fuel length with no inclusion of end leakage effects;
5. No credit taken for structural material present in the assembly; and,
6. No credit taken for fuel burnup or for the buildup of fission product neutron poisons.

Use of administrative controls of fuel burnup levels, neutron absorption properties of the burned fuel, and the presence of steel shell of the canister provide further criticality controls in the Universal Storage System.

Chapter 3

The maximum applied load is W = 89.5×2 = 179 kips. The effective shear area is A_{shear} = P×D (D is the depth of the shear area). The shear strength provided by concrete (V_n) is conservatively taken as $2\sqrt{f_c'}\,A_{shear}$. Using the relationship $V_u \leq \Phi V_n$ (Φ = 0.85 for shear [13], and V_u is the applied load), the required depth of the shear area (D) is determined as:

$$D = \frac{W}{\Phi 2\sqrt{f_c'}P} = 57.0 \text{ inch} < 61.5 \text{ inch}$$

where $f_c' = 4{,}000$ psi.

The actual depth of the shear area (61.5 inch) is adequate since it is greater than the required depth calculated above.

Welds

The lifting lugs are welded to the embedded plate with full penetration welds developing the full strength of the attached lugs.

The vertical plate is welded to the base plate with full penetration welds developing the full strength of the vertical plate.

Therefore, all welds are adequate.

Nelson Studs

During a top end lift, the weight of the canister and pedestal applies a tensile load to the Nelson studs. Using the BWR Class 5 configuration, 75,600-pound canister weight (77,000 pounds used in this analysis), an ANSYS finite element model is used to obtain the maximum load on the Nelson studs. The model, shown in the following figure, represents one-eighth of the pedestal. The weight of the canister is applied as a pressure load to the top of the 2-inch base plate. The load is reacted through the Nelson studs and gap elements between the pedestal and the concrete. Using a 10% dynamic load factor, the maximum load on a Nelson stud is 14,272 pounds.

In accordance with ACI-349-85 [4], the design pullout strength of the concrete (P_d) for any embedment is based on a uniform tensile stress acting on an effective stress area which is defined by the projected area of stress cones radiating toward the attachment from the bearing edge of the anchor heads. The effective area shall be limited by overlapping stress cones, by the intersection of the cones with concrete surfaces, by the bearing area of anchor heads, and by the overall thickness of the concrete. A 45° inclination angle is used for the stress cones.

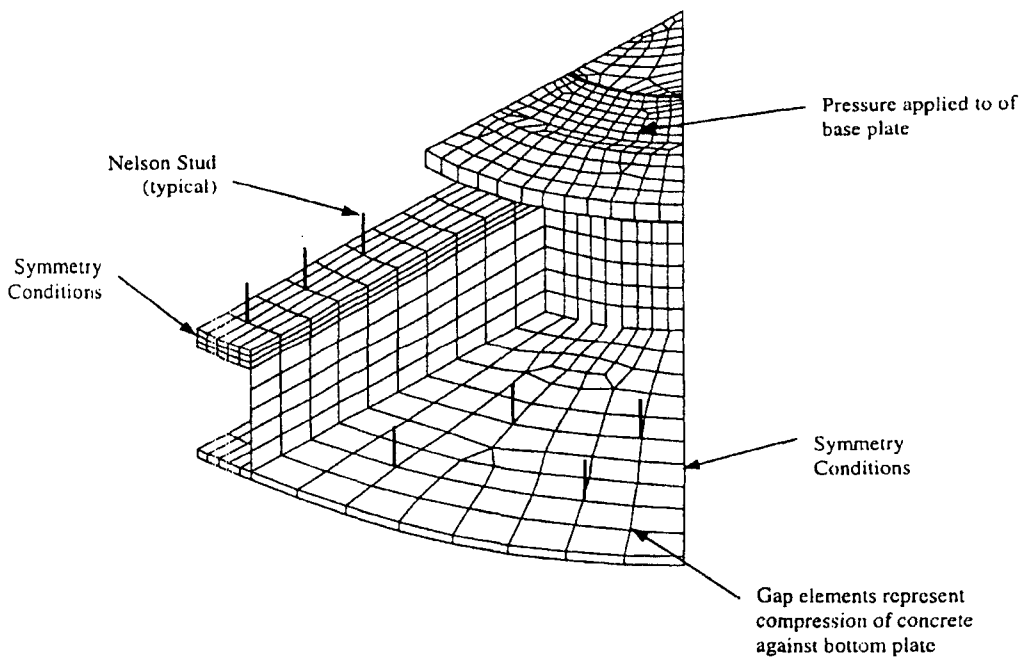

Pedestal Finite Element Model

The maximum pullout strength of the concrete (P_d) is defined by the equation

$$P_d = 4 \times \phi \times \sqrt{f_c^{'}} \times A_{cp}$$

where:

ϕ - strength reduction factor = 0.85

$f_c^{'}$ - concrete compression strength = 4,000 psi

A_{cp} - projected surface area of stress cones for Nelson studs

The maximum load occurs in the six Nelson studs located on the top of the air inlet. A_{cp} for the six Nelson studs equals 419.2 inch^2. Therefore, P_d equals:

$$P_d = 4 \times 0.85 \times \sqrt{4000} \times 419.2 = 90{,}143 \text{ lb.}$$

The total load on the six Nelson studs is 27,508 pounds.

The margin of safety for the concrete is:

$$MS = \frac{90{,}143}{27{,}508} - 1 = +2.28$$

For a single stress cone, the maximum load is 14,272 pounds. The corresponding pull-out strength is:

$$P_d = 4 \text{ x } 0.85 \text{ x } 117.8 \text{ x } \sqrt{4{,}000} = 25{,}331 \text{ lbs.}$$

where the projected surface area for a single stress cone (Acp) of a single Nelson stud is 117.8.

The margin of safety for a single Nelson stud is:

$$MS = \frac{25{,}331}{14{,}272} - 1 = +0.77$$

The cross-sectional area of the Nelson studs is:

$$A_s = \frac{\pi}{4} \times 0.75^2 = 0.44\,in^2$$

The allowable load per stud is:

$$P_s = 0.44 \times 55{,}000 = 24{,}200\ \text{lbs}$$

where 55,000 psi is the ultimate tensile strength for ASTM A108 Grade 1010 through 1020 low carbon steel [14].

The margin of safety for the Nelson stud is:

$$MS = \frac{24{,}200}{14{,}272} - 1 = +0.70$$

Vertical Concrete Cask Pedestal

Using the same ANSYS Finite Element Model that was used for the Nelson Stud analysis, an analysis of the pedestal was performed. The maximum nodal stress intensity for the pedestal is 5,785 psi. From Tables 4.1-4 and 4.1-5, the maximum canister temperature is 376°F. For A36 steel, the allowable stress (S_m) is 19,300 psi. The margin of safety is, conservatively:

$$MS = \frac{19{,}300}{5{,}785} - 1 = +2.34$$

Chapter 8

Table 8.1.1-3 Handling Time Limits Based on Decay Heat Load with Canister Full of Water

Total Heat Load (L) (kW)	**PWR Time Limit (Hours)**	**BWR Time Limit (Hours)**
$20.0 < L \leq 23.0$	20	17
$17.6 < L \leq 20.0$	23	17
$14.0 < L \leq 17.6$	27	17
$11.0 < L \leq 14.0$	30	17
$8.0 < L \leq 11.0$	35	17
$L \leq 8.0$	40	17

THIS PAGE INTENTIONALLY LEFT BLANK

8.1.3 Transport and Placement of the Vertical Concrete Cask

This procedure assumes that the loaded vertical concrete cask is positioned on a heavy-haul transporter and is to be positioned on the ISFSI pad using the air pad set. Alternately, the concrete cask may be lifted and moved using a mobile lifting frame. The mobile lifting frame lifts the cask using four lifting lugs at the top of the concrete cask. The lifting frame may be self-propelled or towed, and does not use the air pad set. Caution shall be observed when lifting the concrete cask using the two pairs of lifting lugs to minimize possible uneven loading on the base of the concrete cask. For lifting devices provided with load measuring equipment, the load on each lug set should be evenly maintained, but in no case shall an uneven load exceed 25,000 pounds between lug sets.

The vertical concrete cask lift height limit is 24 inches when the cask is moved using the air pad set or the mobile lifting frame in accordance with the requirements of Section A5.6(c) and Table A5-1 of Appendix A of the CoC Number 1015 Technical Specifications. Because of lift fixture configuration, the maximum lift height of the concrete cask using the jacking arrangement is approximately 4 inches.

The concrete cask surface dose rates must be verified in accordance with the requirements of LCO 3.2.2. These measurements may be made prior to movement of the cask, at a location along the transport path, or at the ISFSI. An optional supplemental shielding fixture, shown in Drawing 790-613, may be installed in the concrete cask air inlets to reduce the radiation dose rate at the inlets.

1. Using a suitable towing vehicle, tow the heavy-haul transporter to the dry storage pad (ISFSI). Verify that the bed of the transporter is approximately at the same height as the pad surface. Install four (4) hydraulic jacks at the four (4) designated jacking points at the air inlets in the bottom of the vertical concrete cask.
2. Raise the concrete cask approximately 4 inches using the hydraulic jacks.
   Caution: Do not exceed a maximum lift height of 24 inches, in accordance with the requirements of Administrative Control A5.6(c).
3. Move the air-bearing rig set under the cask.
4. Inflate the air-bearing rig set. Remove the four (4) hydraulic jacks.
5. Using a suitable towing vehicle, move the concrete cask from the bed of the transporter to the designated location on the storage pad.
   Note: Spacing between concrete casks must not be less than 15 feet (center-to-center).
6. Turn off the air-bearing rig set, allowing it to deflate.

7. Reinstall the four (4) hydraulic jacks and raise the concrete cask approximately 4 inches. Caution: Do not exceed a maximum lift height of 24 inches, in accordance with the requirements of Administrative Control A5.6(c).
8. Remove the air-bearing rig set pads. Ensure that the surface of the dry storage pad under the concrete cask is free of foreign objects.
9. Lower the concrete cask to the surface and remove the four (4) hydraulic jacks.
10. Install the screens in the inlets and outlets.
11. Scribe/stamp concrete cask nameplate to indicate loading information.
12. Verify concrete cask operability in accordance with SR 3.1.6.2 of LCO A 3.1.6.
13. Verify continued concrete cask thermal operability in accordance with SR 3.1.6.1 of LCO A 3.1.6.

8.2 Removal of the Loaded Transportable Storage Canister from the Vertical Concrete Cask

Removal of the loaded canister from the vertical concrete cask is expected to occur at the time of shipment of the canistered fuel off site. Alternately, removal could be required in the unlikely event of an accident condition that rendered the concrete cask or canister unsuitable for continued long-term storage or for transport. This procedure assumes that the concrete cask is being returned to the reactor cask receiving area. However, the cask may be moved to another facility or area using the same operations. It identifies the general steps to return the loaded canister to the transfer cask and return the transfer cask to the decontamination station, or other designated work. area or facility. Since these steps are the reverse of those undertaken to place the canister in the concrete cask, as described in Section 8.1.2, they are only summarized here.

The concrete cask may be moved using the air pad set or a mobile lifting frame. This procedure assumes the use of the air pad set. If a lifting frame is used, the concrete cask is lifted using four lifting lugs in the top of the cask, and the air pad set and heavy haul transporter are not required. The mobile lifting frame may be self-powered or towed. Caution shall be observed when lifting the concrete cask using the two pairs of lifting lugs to minimize possible uneven loading on the base of the concrete cask. For lifting devices provided with load measuring equipment, the load on each lug set should be evenly maintained, but in no case shall an uneven load exceed 25,000 pounds between lug sets.

At the option of the user, the canister may be removed from the concrete cask and transferred to another concrete cask or to the Universal Transport Cask at the ISFSI site. This transfer is done using the transfer cask, which provides shielding for the canister contents during the transfer.

Certain steps of the procedures in this section may be completed out of sequence to allow for operational efficiency. Changing the order of these steps, within the intent of the procedures, has no effect on the safety of the canister loading process and does not violate any requirements stated in the Technical Specifications or the NAC-UMS® FSAR. This includes the placement and installation of the air pads.

1. Remove the screens and temperature-monitoring instrumentation, if installed.
2. Using the hydraulic jacking system and the air pad set, move the concrete cask from the ISFSI pad to the heavy-haul transporter. The bed of the transporter must be approximately level with the surface of the pad and sheet metal plates are placed across the gap between the pad and the transporter bed.
   Caution: Do not exceed a maximum lift height of 24 inches when raising the concrete cask.

3. Tow the transporter to the cask receiving area or other designated work area or facility.
4. Remove the concrete cask lid and shield plug. Install the hoist rings in the canister structural lid and torque to the value specified in Table 8.1.1-2. Verify that the hoist rings are fully seated against the structural lid and attach the lift slings. Install the transfer adapter on the top of the concrete cask.
5. Retrieve the transfer cask with the retaining ring installed, and position it on the transfer adapter. Attach the shield door hydraulic cylinders.

   Note: The surrounding air temperature for cask unloading operations shall be ≥ 0°F.
6. Open the shield doors. Attach the canister lift slings to the cask handling crane hook.

   Caution: The attachment point of the two three-legged slings must be at least 75 inches above the top of the canister.
7. Raise the canister into the transfer cask.

   Caution: Avoid raising the canister to the point that the canister top engages the transfer cask retaining ring, as this could result in lifting the transfer cask.
8. Close the shield doors. Lower the canister to rest on the shield doors. Disconnect the canister slings from the crane hook. Install and secure door lock bolts/lock pins.

   Note: Monitor the time from this step (closing of shield doors) until initiation of canister cooldown operations, or completion of transfer to a concrete cask or Universal Transport Cask in accordance with LCO 3.1.4.
9. Retrieve the transfer cask lifting yoke. Engage the transfer cask trunnions and move the transfer cask to the decontamination area or designated work station.

After the transfer cask containing the canister is in the decontamination area or other suitable work station, additional operations may be performed on the canister. It may be opened, transferred to another storage cask, or placed in the Universal Transport Cask.

Chapter 9

at least 6 measurements on each sheet. No rejected neutron absorber sheet is used. The sampling plan is supported by written and approved procedures.

The sampling plan requires that a coupon sample be taken from each of the first 100 sheets of absorber material. Thereafter, coupon samples are taken from 20 randomly selected sheets from each set of 100 sheets. This 1 in 5 sampling plan continues until there is a change in lot or batch of constituent materials of the sheet (i.e., boron carbide powder, aluminum powder, or aluminum extrusion) or a process change. The sheet samples are indelibly marked and recorded for identification. This identification is used to document neutron absorber test results, which become part of the quality record documentation package.

9.1.6.2 Neutron Absorber Wet Chemistry Testing

Wet chemistry testing of the test coupons obtained from the sampling plan is used to verify the ^{10}B content of the neutron absorber material. Wet chemistry testing is applied because it is considered to be the most accurate and practical direct measurement method for determining ^{10}B, boron and B_4C content of metal materials and is considered by the Electric Power Research Institute (EPRI) to be the method of choice for this determination.

An approved facility with chemical analysis capability, which could include the neutron absorber vendor's facility, shall be selected to perform the wet chemistry tests. Personnel performing the testing shall be trained and qualified in the process and in the test procedure.

Wet chemistry testing is performed by dissolving the aluminum in the matrix, including the powder and cladding, in a strong acid, leaving the B_4C material. A comparison of the amount of B_4C material remaining to the amount required to meet the ^{10}B content specification is made using a mass-balance calculation based on sample size.

A statistical conclusion about the neutron absorber sheet from which the sample was taken and that batch of neutron absorber sheets may then be drawn based on the test results and the controlled manufacturing processes.

The adequacy of the wet chemistry method is based on its use to qualify the standards employed in neutron blackness testing. The neutron absorption performance of a test material is validated based on its performance compared to a standard. The material properties of the standard are

demonstrated by wet chemistry testing. Consequently, the specified test regimen provides adequate assurance that the neutron absorber sheet thus qualified is acceptable.

9.1.6.3 Acceptance Criteria

The wet chemistry test results shall be considered acceptable if the ^{10}B areal density is determined to be equal to, or greater than, that specified on the fuel tube License Drawings. Failure of any coupon wet chemistry test shall result in 100% sampling, as described in the sampling plan, until compliance with the acceptance criteria is demonstrated.

9.1.7 Thermal Tests

No thermal acceptance testing of the Universal Storage System is required during construction. Thermal performance of the system was confirmed in accordance with the procedure specified in Section 9.2.3 and documented in a report. In addition, initial temperature measurements are taken of the concrete cask(s) placed in service, in accordance with LCO A 3.1.6 to verify the operability of the cask.

9.1.8 Cask Identification

A stainless steel nameplate is permanently attached at eye level on the outer surface of the concrete cask as shown on Drawing No. 790-562.

Drawing No. 790-565 shows the information included on the nameplate.

9.2 Maintenance Program

This section presents the maintenance requirements for the UMS® Universal Storage System and for the transfer cask.

9.2.1 UMS® Storage System Maintenance

The UMS® Universal Storage System is a passive system. No active components or systems are incorporated in the design. Consequently, only a minimal amount of maintenance is required over its lifetime.

The UMS® Universal Storage System has no valves, gaskets, rupture discs, seals, or accessible penetrations. Consequently, there is no maintenance associated with these types of features.

The routine thermal performance surveillance requirements for a loaded UMS® System are described in the Technical Specifications of Appendix A, Limiting Condition for Operation (LCO) 3.1.6.

Per the LCO, an initial verification of the concrete cask's thermal performance is completed by taking temperature measurements, per Surveillance Requirement (SR) 3.1.6.2, between 5 and 30 days following the start of storage operations.

Following the initial temperature measurements, the continuing operability of the concrete cask is verified on a 24-hour frequency by completion of SR 3.1.6.1, which allows verification by visual inspection of the inlet and outlet vents for blockage, or verification by measurement of the air temperature difference between ambient and outlet average. If the operable status of the concrete cask is reduced, the concrete cask will be returned to an operable status or placed in a safe condition as specified in the LCO.

In the event of any off-normal, accident or natural phenomena event, which could lead to the blockage of the concrete cask's inlets and outlets, full vent blockage shall be removed within 24 hours, and any partial blockage shall be corrected to restore the cask to operable status in accordance with LCO 3.1.6.

An annual inspection of the Vertical Concrete Cask exterior is required, to include:

- Visual inspection of concrete surfaces for chipping, spalling or other surface defects. Any defects larger than one inch in diameter (or width) and deeper than one inch shall be regrouted, according to the grout manufacturer's recommendations.

- Reapplication of corrosion-inhibiting (external) coatings on accessible corroded surfaces, including concrete cask lifting lugs, if present.

9.2.2 Transfer Cask Maintenance

The transfer cask trunnions and shield door assemblies shall be visually inspected for gross damage and proper function prior to each use. Annually, the lifting trunnions, shield doors and shield door rails shall be visually inspected for permanent deformation and cracking. Liquid penetrant examination (the magnetic particle method may be used on ferrous material) shall be performed on all accessible lifting trunnion and shield door rail load-bearing weld surfaces. The examination method shall be in accordance with Section V of the ASME Code. The acceptance criteria shall be in accordance with Section III, Subsection NF, Article NF-5350 or NF-5340 as appropriate to the examination method, as required by ANSI N14.6.

The annual examination may be omitted in periods of nonuse of the transfer cask, provided that the transfer cask examination is performed prior to the next use of the transfer cask.

Annually, the coating applied to the carbon steel surfaces of the transfer cask shall be inspected, and any chips, cracks or other defects in the coating shall be repaired.

9.2.3 Required Surveillance of First Storage System Placed in Service

For the first Universal Storage System placed in service with a heat load equal to or greater than 10 kW, the canister is loaded with spent fuel assemblies and the decay heat load calculated for that canister. The canister is then loaded into the vertical concrete cask, and the cask's thermal performance is evaluated by measuring the ambient and air outlet temperatures for normal air flow. The purpose of the surveillance is to measure the heat removal performance of the Universal Storage System and to establish baseline data. In accordance with 10 CFR 72.4, a letter report summarizing the results of the surveillance and evaluation will be submitted to the NRC within 30 days of placing the loaded cask on the ISFSI pad. The report will include a comparison of the calculated temperatures of the NAC-UMS® system heat load to the measured temperatures. A report is not required to be submitted for the NAC-UMS® systems that are subsequently loaded, provided that the performance of the first system placed in service with a heat load ≥ 10 kW, is demonstrated by the comparison of the calculated and measured temperatures.

NAC's "Report on the Thermal Performance of the NAC-UMS® System at the Palo Verde Nuclear Generating Station (PVNGS) Independent Spent Fuel Storage Installation" [10] dated May 30, 2003, was transmitted to the NRC by Arizona Public Service on June 4, 2003, in accordance with the requirements of NAC-UMS® Technical Specification A 5.3, "Special Requirements for the First System Placed in Service," and in compliance with 10 CFR 72.4. The report concludes that the measured temperature data demonstrates that the thermal models and analysis results reported in the NAC-UMS® FSAR correctly represent the heat transfer characteristics of the storage system.

THIS PAGE INTENTIONALLY LEFT BLANK

Chapter 10

10.0 RADIATION PROTECTION

10.1 Ensuring that Occupational Radiation Exposures Are As Low As Is Reasonably Achievable (ALARA)

The Universal Storage System provides radiation protection for all areas and systems that may expose personnel to radiation or radioactive materials. The components of the PWR and BWR configurations of the system that require operation, maintenance and inspection are designed, fabricated, located, and shielded so as to minimize radiation exposure to personnel.

10.1.1 Policy Considerations

It is the policy of NAC International (NAC) to ensure that the Universal Storage System is designed so that operation, inspection, repair and maintenance can be carried out while maintaining occupational exposure as low as is reasonably achievable (ALARA).

10.1.2 Design Considerations

The design of the Universal Storage System complies with the requirement of 10 CFR 72.3 [1] concerning ALARA and meets the requirements of 10 CFR 72.126(a) and 10 CFR 20.1101 [2] with regard to maintaining occupational radiation exposures ALARA. Specific design features that demonstrate the ALARA philosophy are:

- Material selection and surface preparation that facilitate decontamination.
- A basket configuration that allows spent fuel canister loading using accepted standard practice and current experience.
- Positive clean water flow in the transfer cask/canister annulus to minimize the potential for contamination of the canister surface during in-pool loading.
- Passive confinement, thermal, criticality, and shielding systems that require no maintenance.
- Thick steel and concrete walls to reduce the side surface dose rate of the concrete cask to less than 50 mrem/hr (average).

- Nonplanar cooling air pathways to minimize radiation streaming at the inlets and outlets of the vertical concrete cask.

- Optional use of remote, automated outlet air temperature measurement to reduce surveillance time.

10.1.3 Operational Considerations

The ALARA philosophy is incorporated into the procedural steps necessary to operate the Universal Storage System in accordance with its design. The following features or actions, which comprise a baseline radiological controls approach, are incorporated in the design or procedures to minimize occupational radiation exposure:

- Use of automatic equipment for welding the shield lid and structural lid to the canister shell.

- Use of automatic equipment for weld inspections.

- Decontamination of the exterior surface of the transfer cask, welding of the shield lid, and pressure testing of the canister while the canister remains filled with water.

- Use of quick disconnect fittings at penetrations to facilitate required service connections.

- Use of remote handling equipment, where practical, to reduce radiation exposure.

- Use of prefabricated, shaped temporary shielding, if necessary, during automated welding equipment set up and removal, during manual welding, during weld inspection of the shield lid, and during all other canister closing and sealing operations conducted at the shield lid.

The operational procedures at a particular facility are determined by the user's operational conditions and facilities.

10.3 Estimated On-Site Collective Dose Assessment

Occupational radiation exposures (person-mrem) resulting from the use of the Universal Storage System are calculated using the estimated exposure rates presented in Sections 5.1.3, 5.4.3 and 10.2.1. Exposure is evaluated by identifying the tasks and estimating the duration and number of personnel performing those tasks based on industry experience. The tasks identified are based on the design basis operating procedures, as presented in Chapter 8.

Dose rates for the standard transfer cask and the concrete storage cask are calculated using the shielding analysis design basis fuel assemblies. The shielding design basis PWR assembly is the Westinghouse 17×17 Standard fuel assembly, with an initial enrichment of 3.7 wt % ^{235}U. The design basis BWR assembly is the GE 9×9, with 79 fuel rods and an initial enrichment of 3.25 wt % ^{235}U. Both design basis fuel assemblies have an assumed burnup of 40,000 MWD/MTU, and a cool time of 5 years. The selection of these assemblies for the shielding design basis is described in Section 5.1. The principal parameters of these assemblies are presented in Table 2.1.1-1.

10.3.1 Estimated Collective Dose for Loading a Single Universal Storage System

This section estimates the collective dose due to the loading, sealing, transfer and placement on the independent spent fuel storage installation (ISFSI) pad, of the Universal Storage System. The analysis assumes that the exposure incurred by the operators is independent of background radiation, as background radiation varies from site to site. The number of persons allocated to task completion is a typical number required for the task. Working area exposure rates are assigned based on the orientation of the worker with respect to the source and take into account the use of temporary shielding.

Table 10.3-1 summarizes the estimated total exposure by task, attributable to the loading, transfer, sealing and placement of a design basis Universal Storage System based on the use of the standard transfer cask. As documented in Section 5.1, exposures from the advanced transfer cask are not going to differ substantially from exposures documented for the standard transfer cask.

Exposures associated with shield lid operations are based on the presence of a temporary 5-inch thick steel shield.

This estimated dose is considered to be conservative as it assumes the loading of a cask with design basis fuel, and does not account for efficiencies in the loading process that occur with experience.

10.3.2 Estimated Annual Dose Due to Routine Operations

Once in place, the ISFSI requires limited ongoing inspection and surveillance throughout its service life. The annual dose evaluations presented in Tables 10.3-4 through 10.3-7 estimate the exposure due to a combination of inspection and surveillance activities and other tasks that are anticipated to be representative of an operational facility. The visual inspection exposure, based on a daily inspection of the storage cask or storage cask array, is provided for information only since a daily inspection is not required as long as the temperature monitoring system is operational. Other than an inspection of the Vertical Concrete Cask surface, no annual maintenance of the storage system is required. Collective dose due to design basis off-normal conditions and accident events, such as clearing the blockage of air vents, is accounted for in Chapter 11.0, and is not included in this evaluation.

Routine operations are expected to include:

- The optional daily electronic measurement of ambient air and air outlet temperatures for each cask in service. The outlet temperature-monitoring station may be located away from the cask array. Remote temperature measurement is not assumed to contribute to operator dose.

- An optional daily inspection of the concrete cask inlet and outlet screens to verify they are intact and unobstructed. The time required to perform the inspection, and the expected dose, will be site specific due to ISFSI pad dimensions and configurations, concrete cask array, distance of the inspector from the cask, etc.

- A daily security inspection of the fence and equipment surrounding the storage area. The security inspection is assumed to make no significant additional contribution to operator dose.

- Grounds maintenance performed every other week by 1 maintenance technician. Grounds maintenance is assumed to require 0.5 hour.

- Quarterly radiological surveillance. The surveillance consists of a radiological survey comprised of a surface radiation measurement on each cask, the determination and/or verification of general area exposure rates and radiological postings. This surveillance is assumed to require 1 hour and 1 person.

- Annual inspection of the general condition of the casks. This inspection is estimated to require 15 minutes per cask and require 2 technicians.

Calculation of the dose due to annual operation and surveillance requirements is estimated based on a single cask containing design basis fuel, and on an ISFSI array of 20 casks that are assumed to be loaded at the rate of 2 casks per year over a ten-year period. Consequently, the casks in the array are assumed to have the cool times as shown in Table 10.3-2. To account for the reduction in source term with cool time, weighting factors are applied to the neutron and gamma radiation spectra as shown in Table 10.3-3.

The annual operation and surveillance requirements result in an estimated annual collective exposure of 26.4 person-mrem for a single PWR cask containing design basis fuel and 17.0 person-mrem for a single design basis BWR cask. The annual operation and surveillance requirements for the assumed single cask and total estimated dose are shown in Table 10.3-4 for the single PWR cask and in Table 10.3-6 for the BWR cask. The annual operation and surveillance requirements for the assumed 20-cask ISFSI are shown in Tables 10.3-5 and 10.3-7 for PWR and BWR configurations, respectively. These tables show an estimated annual collective exposure of 377.6 person-mrem for the PWR cask configuration and 239.4 person-mrem for the BWR cask configuration for operation and maintenance of a 20-cask array.

Figure 10.3-1 Typical ISFSI 20 Cask Array Layout

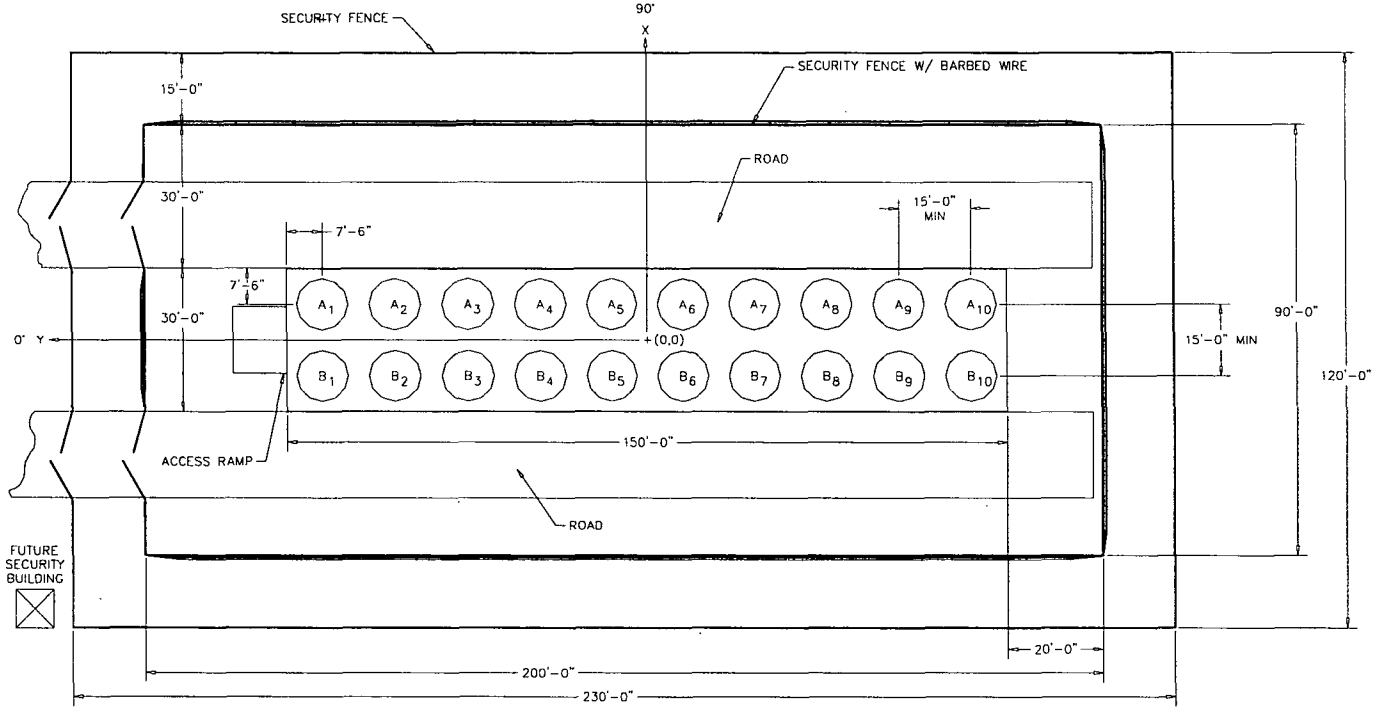

Chapter 11

11.1 Off-Normal Events

This section evaluates postulated events that might occur once during any calendar year of operations. The actual occurrence of any of these events is, therefore, infrequent.

11.1.1 Severe Ambient Temperature Conditions (106°F and -40°F)

This section evaluates the Universal Storage System for the steady state effects of severe ambient temperature conditions (106°F and -40°F).

11.1.1.1 Cause of Severe Ambient Temperature Event

Large geographical areas of the United States are subjected to sustained summer temperatures in the 90°F to 100°F range and winter temperatures that are significantly below zero. To bound the expected steady state temperatures of the canister and storage cask during these severe ambient conditions, analyses are performed to calculate the steady state storage cask, canister, and fuel cladding temperatures for a 106°F ambient temperature and solar loads (see Table 4.1-1). Similarly, winter weather analyses are performed for a -40°F ambient temperature with no solar load. Neither ambient temperature condition is expected to last more than several days.

11.1.1.2 Detection of Severe Ambient Temperature Event

Detection of off-normal ambient temperatures would occur during measurement of site ambient temperatures.

11.1.1.3 Analysis of Severe Ambient Temperature Event

Off-normal temperature conditions are evaluated by using the thermal models described in Section 4.4.1. The design basis heat load of 23.0 kW is used in the evaluation of PWR and BWR fuels. The concrete temperatures are determined using the two-dimensional axisymmetric air flow and concrete cask models (Section 4.4.1.1) and the canister, basket and fuel cladding temperatures are determined using the three-dimensional canister models (Section 4.4.1.2). A steady state condition is considered in all analyses. The temperature profiles for the concrete cask and for the air flow associated with a 106°F ambient condition are shown in Figure 11.1.1-1 and Figure 11.1.1-2, respectively. Temperature profiles for the -40°F ambient temperature condition for the PWR fuel

are shown in Figure 11.1.1-3 and Figure 11.1.1-4. Temperature profiles for the BWR cask are similar.

The principal component temperatures for each of the ambient temperature conditions discussed above are summarized in the following table along with the allowable temperatures. As the table shows, the component temperatures are within the allowable values for the off-normal ambient conditions.

Component	106°F Ambient Max Temp. (°F)		-40°F Ambient Max Temp. (°F)		Allowable Temp. (°F)	
	PWR	BWR	PWR	BWR	PWR	BWR
Fuel Cladding	672	667	561	540	1058	1058
Support Disks	628	640	505	505	800	700
Heat Transfer Disks	626	638	502	504	750	750
Canister Shell	381	405	226	252	800	800
Concrete	228	231	17	20	350	350

The thermal stress evaluations for the concrete cask for these off-normal conditions are bounded by those for the accident condition of "Maximum Anticipated Heat Load (133°F ambient temperature)" as presented in Section 11.2.7. Thermal stress analyses for the canister and basket components are performed using the ANSYS finite element models as described in Section 3.4.4. Evaluations of the thermal stresses combined with the stresses due to other off-normal loads (e.g., canister internal pressure and handling) are shown in Section 11.1.3.

There are no adverse consequences for these off-normal conditions. The maximum component temperatures are within the allowable temperature values.

11.1.1.4 Corrective Actions

No corrective actions are required for this off-normal condition.

11.1.1.5 Radiological Impact

There is no radiological impact due to this off-normal event.

11.1.2 Blockage of Half of the Air Inlets

This section evaluates the Universal Storage System for the steady state effects of a blockage of one-half of the air inlets at the normal ambient temperature (76°F).

11.1.2.1 Cause of the Blockage Event

Although unlikely, blockage of half of the air inlets may occur due to blowing debris, snow, intrusion of a burrowing animal, etc. The screens over the inlets are expected to minimize any blockage of the inlet channels.

11.1.2.2 Detection of the Blockage Event

This event would be detected by the daily concrete cask operability inspection, which is performed either by outlet air temperature measurements or by visual inspection of the inlet and outlet screens for blockage and integrity. It could also be detected by security forces, or other operations personnel, engaged in other routine activities such as fence inspection, or grounds maintenance.

11.1.2.3 Analysis of the Blockage Event

Using the same methods and the same thermal models described in Section 11.1.1 for the off-normal conditions of severe ambient temperatures, thermal evaluations are performed for the concrete cask and the canister and its contents for this off-normal condition. The boundary condition of the two-dimensional axisymmetric air flow and concrete cask model is modified to allow only half of the air flow into the air inlet to simulate the half inlets blocked condition. The calculated maximum component temperatures due to this off-normal condition are compared to the allowable component temperatures. Table 11.1.2-1 summarizes the component temperatures for off-normal conditions. As the table demonstrates, the calculated temperatures are shown to be below the component allowable temperatures.

The thermal stress evaluations for the concrete cask for this off-normal condition are bounded by those for the accident condition of "Maximum Anticipated Heat Load (133°F ambient temperature)" as presented in Section 11.2.7. Thermal stress analyses for the canister and basket components are performed using the ANSYS finite element models described in Section 3.4.4. Evaluations of the thermal stresses combined with stresses due to other off-normal loads (e.g., canister internal pressure and handling) are shown in Section 11.1.3.

11.1.2.4 Corrective Actions

The debris blocking the affected air inlets must be manually removed. The nature of the debris may indicate that other actions are required to prevent recurrence of the blockage.

11.1.2.5 Radiological Impact

There are no significant radiological consequences for this event. Personnel will be subject to an estimated maximum contact dose rate of 66 mrem/hr when clearing the PWR cask inlets. If it is assumed that a worker kneeling with his hands on the inlets would require 15 minutes to clear the inlets, the estimated maximum extremity dose is 17 mrem. For clearing the BWR cask inlets, the maximum contact dose rate and the maximum extremity dose are estimated to be 51 mrem/hr and 13 mrem, respectively. The whole body dose in both PWR and BWR cases will be significantly less.

11.1.4 Failure of Instrumentation

The Universal Storage System may use a temperature-sensing system to measure the outlet air temperature at each of the four air outlets on each concrete cask. The air temperatures at the outlets may be measured and reviewed daily.

11.1.4.1 Cause of Instrumentation Failure Event

The temperature instrumentation failure event could occur as a result of instrumentation component failure, or as a result of any event that interrupted power or altered temperature sensor output.

11.1.4.2 Detection of Instrumentation Failure Event

The temperature instrumentation failure event may be identified by the lack of, or an inappropriate, reading at the temperature reader terminal. The event could also be identified by disparities between outlet temperatures in a cask or between similar casks.

11.1.4.3 Analysis of Instrumentation Failure Event

For concrete casks incorporating daily temperature-monitoring programs, the maximum time period during which an increase in outlet air temperatures may go undetected is 24 hours. The principal condition that could cause an increase in temperature is the blockage of the air inlets and/or outlets. Section 11.2.13 shows that even if all of the inlets and outlets of a single cask are blocked immediately after a temperature measurement, it would take longer than 24 hours before any component approaches its allowable temperature limit. Therefore, there would be sufficient time to identify and correct temperature instrumentation failure events prior to critical system components reaching their temperature limits. During the period of loss of instrumentation, no significant change in canister temperature will occur under normal conditions. Therefore, instrument failure would be of no consequence when the affected storage cask continues to operate in a normal storage condition.

Because the canister and the concrete cask are a large heat sink, and because there are few conditions that could result in a cooling air temperature increase, the temporary loss of remote

sensing and monitoring of the outlet air temperature is not a major concern. No applicable regulatory criteria are violated by the failure of the temperature instrumentation system.

11.1.4.4 Corrective Actions

This event requires that the temperature reporting equipment be replaced, repaired or otherwise returned to operable status, or that the concrete cask inlet and outlet screens be visually inspected for blockage.

11.1.4.5 Radiological Impact

There are no radiological consequences for this event.

The temperatures used bound the analysis locations for all storage conditions. The actual temperatures at these locations for storage for the BWR spacer at the bottom weldment are 118°F (minimum bottom weldment temperature), and 329°F (minimum temperature of 10th support disk) for the split spacer. The 10th support disk is counted from bottom weldment.

Fuel Tube Analysis

During the postulated 24-inch end drop of the concrete cask, fuel assemblies are supported by the canister bottom plate. The fuel assembly weight is not carried by the fuel tubes in the end drop. Therefore, evaluation of the fuel tube is performed considering the weight of the fuel tube, the canister deceleration and the minimum fuel tube cross-section. The minimum cross-section is located at the contact point of the fuel tube with the basket bottom weldment. The PWR fuel tube analysis is bounding because its weight (153 pounds/tube) is approximately twice that of the BWR fuel tube (83 pounds/tube). The minimum cross-section area of the PWR fuel tube is:

$$A = (\text{thickness})(\text{mean perimeter})$$

$$A = (0.048 \text{ in.})(8.80 \text{ in.} + 0.048 \text{ in.})(4) = 1.69 \text{ in}^2$$

The maximum compressive and bearing stress in the fuel tube is:

$$S_b = \frac{(60g)(153 \text{ lbs})}{1.69 \text{ in}^2} = 5{,}432 \text{ psi}$$

The Type 304 stainless steel yield strength is 17,300 psi at a conservatively high temperature of 750°F. The margin of safety is:

$$MS = \frac{S_y}{S_b} - 1 = \frac{17{,}300 \text{ psi}}{5{,}432 \text{ psi}} - 1 = +2.18 \text{ at } 750°F$$

Summary of Results

Evaluation of the UMS cask and canister during a 24-inch drop accident shows that the resulting maximum acceleration of the canister is 57.4g. The acceleration determined for the canister during the 24-inch drop is less than its design allowable g-load and, therefore, is considered bounded. This accident condition does not lead to a reduction in the cask's shielding effectiveness. The base weldment, which includes the air inlets, is crushed approximately 1-inch as the result of the 24-inch drop. The effect of the reduction of the inlet area by the drop is to reduce cooling airflow. This

condition is bounded by the consequences of the loss of one-half of the air inlets evaluated in Section 11.1.2.

11.2.4.4 Corrective Actions

Following the accident event, perform the required Response Surveillance in accordance with Section A 5.4 of the Technical Specifications. Corrective actions shall be taken in accordance with the surveillance requirements to return the affected system to a safe operating condition, as applicable to the affected component(s).

11.2.4.5 Radiological Impact

There are no radiological consequences for this accident.

which shows that the component temperatures are below the allowable temperatures. The limited duration of the fire and the large thermal capacitance of the concrete cask restricted the temperatures above 244°F to a region less than 3 inches above the top surface of the air inlets. The maximum bulk concrete temperature is 138°F during and after the fire accident. This corresponds to an increase of less than 3°F compared to the bulk concrete temperature for normal condition of storage. These results confirm that the operation of the concrete cask is not adversely affected during and after the fire accident condition.

11.2.6.4 Corrective Actions

Immediately upon detection of the fire, appropriate actions should be taken by site personnel to extinguish the fire. The concrete cask should then be inspected for general deterioration of the concrete, loss of shielding (spalling of concrete), exposed reinforcing bar, and surface discoloration that could affect heat rejection. This inspection will be the basis for the determination of any repair activities necessary to return the concrete cask to its design basis configuration.

In addition, following the accident event, perform the required Response Surveillance in accordance with Section A 5.4 of the Technical Specifications. Corrective actions shall be taken in accordance with the surveillance requirements to return the affected system to a safe operating condition, as applicable to the affected component(s).

11.2.6.5 Radiological Impact

There are no significant radiological consequences for this accident. There may be local spalling of concrete during the fire event, which could lead to some minor reduction in shielding effectiveness. The principal effect would be local increases in radiation dose rate on the cask surface.

Figure 11.2.6-1 Temperature Boundary Condition Applied to the Nodes of the Inlet for the Fire Accident Condition

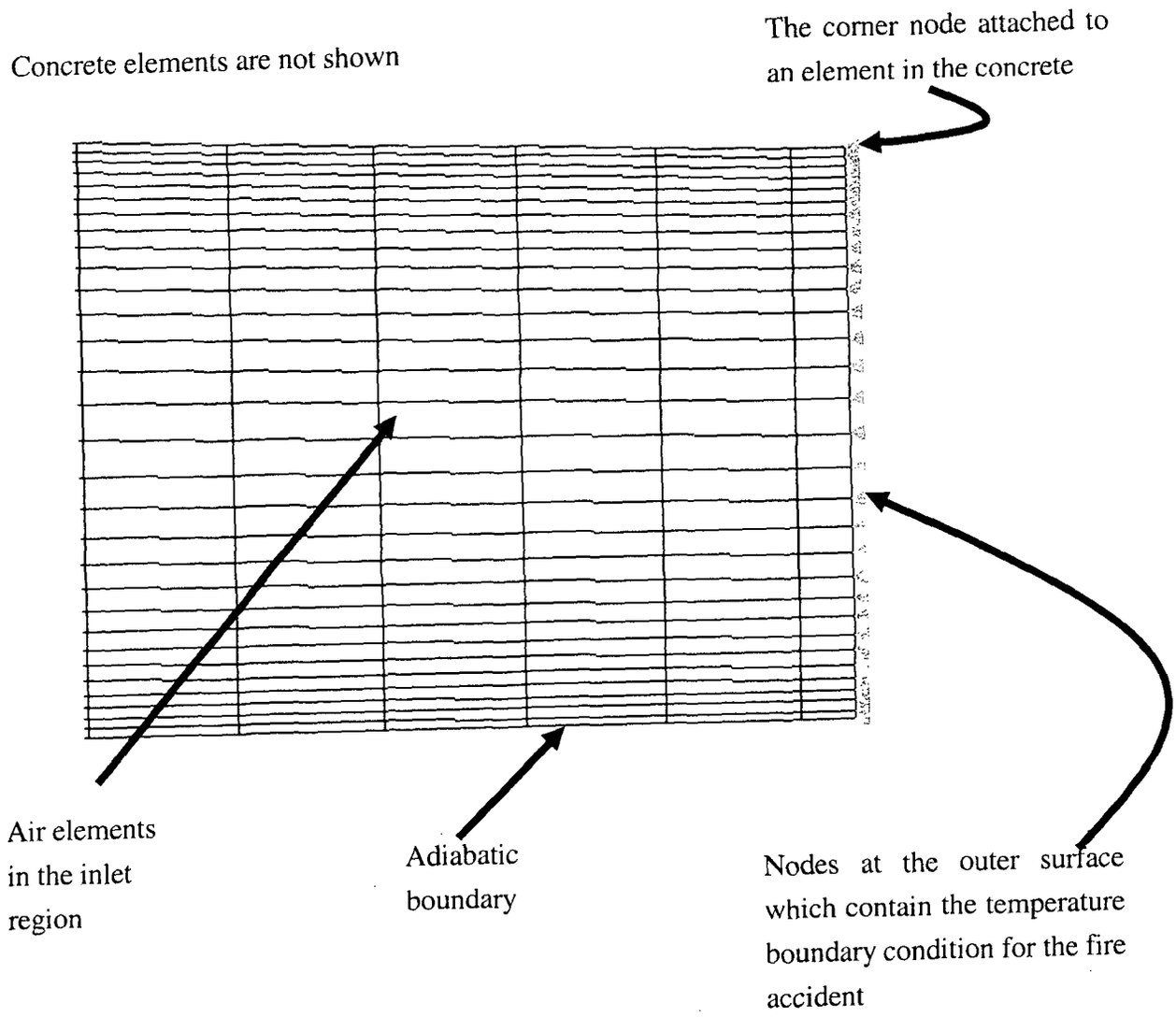

11.2.7 Maximum Anticipated Heat Load (133°F Ambient Temperature)

This section evaluates the Universal Storage System response to storage operation at an ambient temperature of 133°F. The condition is analyzed in accordance with the requirements of ANSI/ANS 57.9 to evaluate a credible worst-case thermal loading. A steady-state condition is considered in the thermal evaluation of the system for this accident condition.

11.2.7.1 Cause of Maximum Anticipated Heat Load

This condition results from a weather event that causes the concrete cask to be subject to a 133°F ambient temperature with full insolation.

11.2.7.2 Detection of Maximum Anticipated Heat Load

Detection of the high ambient temperature condition will be by observation of the site ambient temperature.

11.2.7.3 Analysis of Maximum Anticipated Heat Load

Using the same methods and thermal models described in Section 11.1.1 for the off-normal conditions of severe ambient temperatures (106°F and -40°F), thermal evaluations are performed for the concrete cask and the canister with its contents for this accident condition. The principal PWR and BWR cask component temperatures for this ambient condition are:

Component	133°F Ambient Max Temp. (°F)		Allowable Max Temp. (°F)	
	PWR	BWR	PWR	BWR
Fuel Cladding	693	690	1058	1058
Support Disks	650	664	800	700
Heat Transfer Disks	648	662	750	750
Canister Shell	408	432	800	800
Concrete	262	266	350	350

This evaluation shows that the component temperatures are within the allowable temperatures for the extreme ambient temperature conditions.

Thermal stress evaluations for the concrete cask are performed using the method and model presented in Section 3.4.4. The concrete temperature results obtained from the thermal analysis for this accident condition are applied to the structural model for stress calculation. The maximum stress, 7,869 psi in the reinforcing steel, occurs in the circumferential direction. The margin of safety is 54,000 psi/7,869 psi -1 = +5.9. The maximum compressive stress, 808 psi, in the concrete occurs in the vertical direction. The maximum circumferential compressive stress in the concrete is 116 psi. The margin of safety is [0.7(4,000 psi)/808 psi] -1 = +2.5. These stresses are used in the loading combination for the concrete cask shown in Section 3.4.4.2.

11.2.7.4 Corrective Actions

The high ambient temperature condition is a natural phenomenon, and no recovery or corrective actions are required.

11.2.7.5 Radiological Impact

There are no dose implications due to this event.

The D_f is computed by incrementing β from zero until the kinetic energy equals the crush energy. For the PWR and the BWR, velocities of 68 in/sec and 50 in/sec are computed, respectively. These result in the following accelerations and crush depths using the weights and heights of the five classes of the vertical concrete cask.

Vertical Concrete Cask Acceleration/Crush Summary

	Class 1	Class 2	Class 3	Class 4	Class 5
VCC Side Impact Acceleration (g)	32.5	32.6	32.7	26.3	26.3
Design Basis Tip-over Acceleration (A_d) in (g)	40	40	40	30	30
Dynamic Load Factor (DLF) for the Tip-over Evaluation	1.19	1.11	1.2	1.05	1.04
A_d/DLF	33.6	36.0	33.3	28.6	28.8
Crush (in)	.3	.3	.3	.2	.2

As indicated in the preceding table, the accelerations resulting from the impact are less than the factored accelerations (A_d/DLF) of the basket used in the PWR and BWR basket and canister evaluations. Therefore, the stresses and displacements of the basket and canister resulting from the tip-over evaluation bound the stresses and displacements resulting from a side impact of two vertical concrete casks.

While the 15-foot center-to-center cask spacing was evaluated in the criticality analysis documented in Chapter 6, the calculations in Chapter 6, combined with minimal cask surface neutron fluxes shown in Chapter 5, clearly demonstrate that there is no neutronic interaction between casks in the array. Therefore, variations in cask spacing as a result of cask movement (including cask-to-cask contact) during abnormal/accident conditions will have no effect on system reactivity.

11.2.8.3 Corrective Actions

Following the natural phenomenon event, perform the required Response Surveillance in accordance with Section A 5.4 of the Technical Specifications. Corrective actions shall be taken in accordance with the surveillance requirements to return the affected system to a safe operating condition, as applicable to the affected component(s). Concrete casks shall be restored to operable status in accordance with LCO A 3.1.6 of the Technical Specifications. Optional temperature-monitoring equipment, if used, should be verified as operable, or repaired and

returned to service. As sliding may occur, the positions of the concrete casks should be verified or the casks shall be repositioned to ensure they maintain the 15-foot center-to-center spacing on the ISFSI pad established in Section 8.1.3.

11.2.8.4 Radiological Impact

Minor radiological consequences may result if the concrete casks are required to be repositioned on the ISFSI pad.

Maximum stresses at the base surface:

$\sigma_v = M / S_{outer} \approx 20$ psi (tension or compression)

The compressive stresses are included in load combination No. 7 in Table 3.4.4.2–1. As shown in Table 3.4.4.2–1, the maximum combined stresses for the load combination due to dead, live, thermal and flood loading, are less than the allowable stress.

11.2.9.3 Corrective Actions

Following the natural phenomenon event, perform the required Response Surveillance in accordance with Section A 5.4 of the Technical Specifications. Corrective actions shall be taken in accordance with the surveillance requirements to return the affected system to a safe operating condition, as applicable to the affected component(s). Concrete casks shall be restored to operable status in accordance with LCO A 3.1.6 of the Technical Specifications. Optional temperature-monitoring equipment, if used, should be verified as operable, or repaired and returned to service.

11.2.9.4 Radiological Impact

There are no dose consequences associated with the design basis flood event.

Table 11.2.9-1 Canister Increased External Pressure (22 psi) with No Internal Pressure (0 psi) Primary Membrane (P_m) Stresses (ksi)

Section No. [1]	S_X	S_Y	S_Z	S_{XY}	S_{YZ}	S_{XZ}	Stress Intensity	Stress Allowable[2]	Margin of Safety
1	-0.17	-0.86	-2.17	0.06	0.03	0.31	2.10	40.08	18.1
2	-1.46	1.76	1.37	-0.24	0.03	0.30	3.29	40.08	11.2
3	0.24	2.71	-0.64	-0.23	-0.05	-0.61	3.69	40.08	9.9
4	-0.02	-1.18	-0.60	0.10	0.00	0.00	1.18	38.77	31.8
5	-0.02	-1.17	-0.60	0.10	0.00	0.00	1.17	35.86	29.7
6	-0.02	-1.17	-0.60	0.10	0.00	0.00	1.17	35.55	29.4
7	-0.02	-1.17	-0.60	0.10	0.00	0.00	1.17	38.23	31.7
8	-0.01	-1.13	-0.54	0.10	0.00	0.00	1.13	40.08	34.3
9	-0.28	-0.34	-0.16	0.02	-0.01	-0.12	0.27	40.08	145.6
10	0.32	-0.13	-0.08	0.03	-0.01	-0.07	0.46	40.08	85.5
11	-0.27	-0.13	0.09	-0.01	-0.01	-0.06	0.37	40.08	106.1
12	0.07	-0.23	-0.17	0.03	-0.01	0.02	0.32	40.08	125.6
13	0.06	-0.16	-0.30	0.02	-0.01	-0.06	0.38	40.08	103.4
14	-0.38	-0.38	-0.01	0.00	-0.16	0.02	0.49	40.08	81.5
15	0.02	0.02	-0.01	0.00	0.00	0.00	0.03	40.08	1235.3
16	-0.03	-0.03	-0.02	0.00	0.00	0.00	0.02	40.08	2524.5

(1) See Figure 3.4.4.1-4 for definition of locations of stress sections.

(2) ASME Service Level D is used for material allowable stress.

The pulse is represented conservatively as a half sine form, so that the equivalent $f = 1/2\tau$, where τ is the referenced pulse duration. Two skin depths, corresponding to different pulse duration, are computed. The larger effective frequency will result in a smaller effective area to conduct the current. The effective resistance is computed as:

$$R = \frac{\rho\, l}{a}$$

where:

R = resistance (ohms)
ρ = resistivity = 9.78×10^{-8} (ohm-m)
l = length of conductor path
a = area of conductor (m^2)

Using the current level of the pulse and the duration in conjunction with the carbon steel liner, the resulting energy into the shell is computed using Equation 11.2.10.1.

This thermal energy dissipation is conservatively assumed to occur in the localized volume of the carbon steel involved in the current flow path through the flange to the inner liner. Assuming no heat loss or thermal diffusion beyond the current flow boundary, the maximum temperature increase in the flange due to this thermal energy dissipation is calculated [28] as:

$$\Delta T = \frac{Q}{mc}$$

where:

ΔT = temperature change (°F)
Q = thermal energy (BTU)
C = 0.113 Btu/lbs °F
m = mass (lbm)

The ΔT_1 for the peak current (250KA, 260 μsec) is found to be 4.7°F.

The ΔT_2 for the continuous current (2 kA, 2 sec) is found to be negligible (0.0006°F).

The ΔT_1 corresponds to the increase in the maximum temperature of the steel within the current path. For the concrete to experience an increase in temperature, the heat must disperse from the steel surface throughout the steel. Using the total thickness of the steel, over the 90-degree section, the increase in temperature would be proportional to the volume of steel in this sector resulting in a temperature rise of less than 1°F.

Therefore the increase in concrete temperature attributed to Joulean heating is not significant.

11.2.10.4 Corrective Actions

Following the natural phenomenon event, perform the required Response Surveillance in accordance with Section A 5.4 of the Technical Specifications. Corrective actions shall be taken in accordance with the surveillance requirements to return the affected system to a safe operating condition, as applicable to the affected component(s).

11.2.10.5 Radiological Impact

There are no dose implications due to the lightning event.

Tornado Effects on the Canister

The postulated tornado wind loading and missile impacts are not capable of overturning the cask, or penetrating the boundary established by the concrete cask. Consequently, there is no effect on the canister. Stresses resulting from the tornado-induced decreased external pressure are bounded by the stresses due to the accident internal pressure discussed in Section 11.2.1.

11.2.11.4 Corrective Actions

Following the natural phenomenon event, perform the required Response Surveillance in accordance with Section A 5.4 of the Technical Specifications. Corrective actions shall be taken in accordance with the surveillance requirements to return the affected system to a safe operating condition, as applicable to the affected component(s).

Concrete casks shall be restored to operable status in accordance with LCO A 3.1.6 of the Technical Specifications. Optional temperature-monitoring equipment, if used, should be verified as operable, or repaired and returned to service.

11.2.11.5 Radiological Impact

Damage to the vertical concrete cask after a design basis accident does not result in a radiation exposure at the controlled area boundary in excess of 5 rem to the whole body or any organ. The penetrating missile impact is estimated to reduce the concrete shielding thickness, locally at the point of impact, by approximately 6 inches. Localized cask surface dose rates for the removal of 6 inches of concrete are estimated to be less than 250 mrem/hr for the PWR and BWR configurations.

Figure 11.2.11-1 Principal Dimensions and Moment Arms Used in Tornado Evaluation

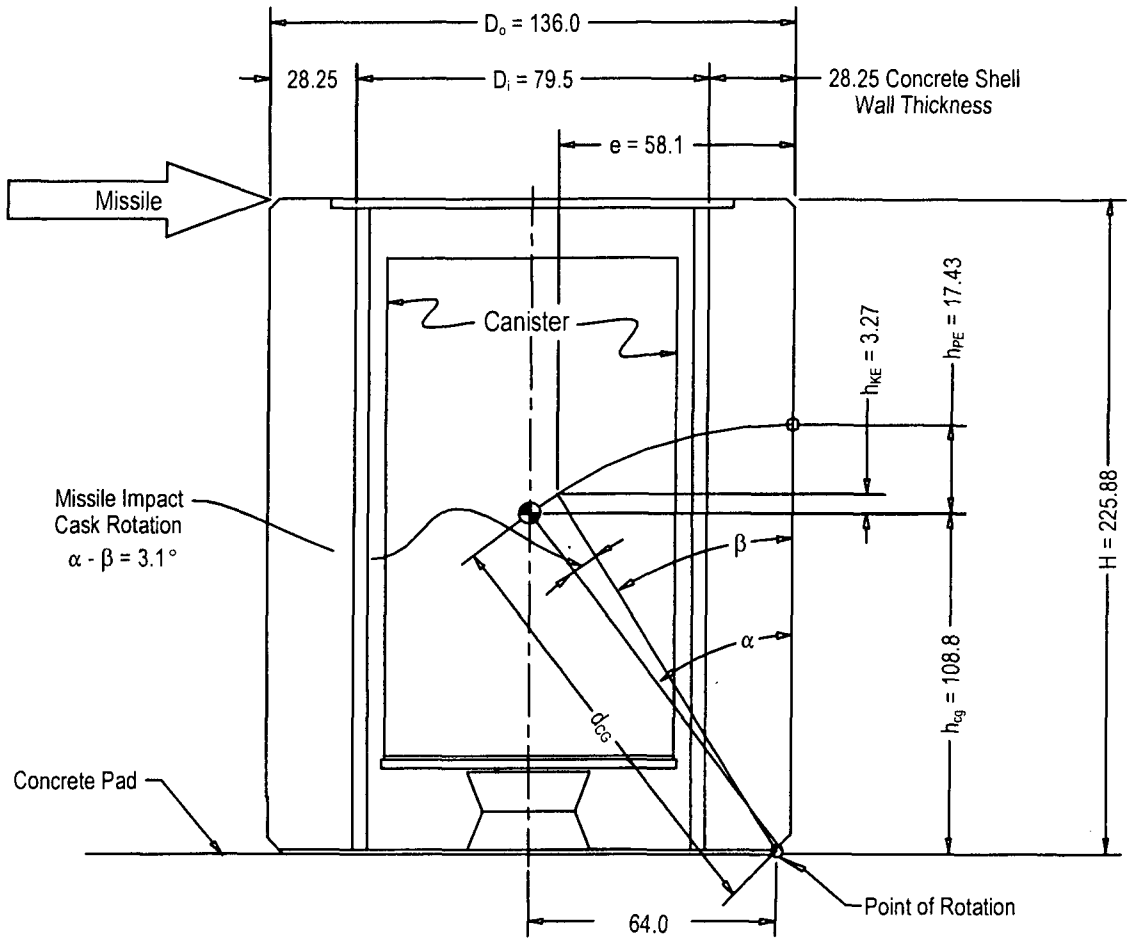

11.2.12.5 Corrective Actions

Following the accident event, perform the required Response Surveillance in accordance with Section A 5.4 of the Technical Specifications. Corrective actions shall be taken in accordance with the surveillance requirements to return the affected system to a safe operating condition, as applicable to the affected component(s).

The most important recovery action required following a concrete cask tip-over is the uprighting of the cask to minimize the dose rate from the exposed bottom end. The uprighting operation will require a heavy lift capability and rigging expertise. The concrete cask must be returned to the vertical position by rotation around a convenient bottom edge, and by using a method and rigging that controls the rotation to the vertical position.

Surface and top and bottom edges of the concrete cask are expected to exhibit cracking and possibly loss of concrete down to the layer of reinforcing bar. If only minor damage occurs, the concrete may be repairable by using grout. Otherwise, it may be necessary to remove the canister for installation in a new concrete cask. If the canister remains in the cask, it should be returned to its centered storage position within the cask, in accordance with FSAR Section 8.1.2, Item 17, Note 1.

The storage pad, if damaged, must be repaired to preclude the intrusion of water that could cause further deterioration of the pad in freeze-thaw cycles.

11.2.12.6 Radiological Impact

There is an adverse radiological consequence in the hypothetical tip-over event since the bottom end of the concrete cask and the canister have significantly less shielding than the sides and tops of these same components. The dose rate at 1 meter is calculated, using a 1–D analysis, to be approximately 34 rem/hour, and the dose at 4 meters is estimated to be approximately 4 rem/hour. Consequently, following a tip-over event, supplemental shielding should be used until the concrete cask can be uprighted. Stringent access controls must be applied to ensure that personnel do not enter the area of radiation shine from the exposed bottom of the tipped-over concrete cask.

Damage to the edges or surface of the concrete cask may occur following a tip-over, which could result in marginally higher dose rates at the bottom edge or at surface cracks in the concrete. This increased dose rate is not expected to be significant, and would be dependent on the specific damage incurred.

THIS PAGE INTENTIONALLY LEFT BLANK

11.2.13 Full Blockage of Vertical Concrete Cask Air Inlets and Outlets

This section evaluates the Vertical Concrete Cask for the steady state effects of full blockage of the air inlets and outlets at the normal ambient temperature (76°F). It estimates the duration of the event that results in the fuel cladding, the fuel basket and the concrete reaching their design basis limiting temperatures (See Table 4.1-3 for the allowable temperatures for short-term conditions).

The evaluation demonstrates that there are no adverse consequences due to this accident, provided that the full blockage of the concrete cask inlets and outlets is cleared within 24 hours.

11.2.13.1 Cause of Full Blockage

The likely cause of complete cask air inlet and outlet blockage is the covering of the cask with earth in a catastrophic event that is significantly greater than the design basis earthquake or a landslide. This event is a bounding accident and is not credible.

11.2.13.2 Detection of Full Blockage

Blockage of the cask air inlets and outlets will be visually detected during the general site inspection following an earthquake, land slide, or other events with a potential for such blockage. In addition, a daily surveillance of the concrete cask to verify operability limits the potential for a full blockage event to go undetected.

11.2.13.3 Analysis of Full Blockage

The accident temperature conditions are evaluated using the thermal models described in Section 4.4.1. The analysis assumes initial normal storage conditions, with the sudden loss of convective cooling of the canister. Heat is then rejected from the canister to the Vertical Concrete Cask liner by radiation and conduction. The loss of convective cooling results in the fairly rapid and sustained heat-up of the canister and the concrete cask. To account for the loss of convective cooling in the ANSYS air flow model (Section 4.4.1.1), the elements in the model are replaced with thermal conduction elements. This model is used to evaluate the thermal transient resulting from the postulated boundary conditions. The analysis indicates that the maximum basket temperature (support disk and heat transfer disk) remain less than the allowable temperature for 24 hours after the initiation of the event. The maximum fuel cladding temperature and the maximum concrete

bulk temperature remain less than the allowable temperatures for about 6 days (150 hours) after the initiation of the event. The heat-up of the fuel cladding, canister shell and concrete (bulk temperature) is shown in Figures 11.2.13-1 and 11.2.13-2, for the PWR and BWR configurations, respectively.

11.2.13.4 Corrective Actions

Following the natural phenomenon event, perform the required Response Surveillance in accordance with Section A 5.4 of the Technical Specifications. Corrective actions shall be taken in accordance with the surveillance requirements to return the affected system to a safe operating condition, as applicable to the affected component(s).

Following any event that could cause blockage of the concrete cask inlets and outlets, concrete casks shall be restored to operable status in accordance with LCO A 3.1.6 of the Technical Specifications. Optional temperature-monitoring equipment, if used, should be verified as operable, or repaired and returned to service.

11.2.13.5 Radiological Impact

There are no significant radiological consequences for this event, as the Vertical Concrete Cask retains its shielding performance. Dose is incurred as a consequence of uncovering the concrete cask and vent system. Since the dose rates at the air inlets and outlets are higher than the nominal rate (35 mrem/hr) at the cask wall, personnel will be subject to an estimated maximum dose rate of 100 mrem/hr when clearing the inlets and outlets. If it is assumed that a worker kneeling with his hands on the inlets or outlets requires 15 minutes to clear each inlet or outlet, the estimated extremity dose is 200 mrem for the 8 openings. The whole body dose will be slightly less. In addition, some dose is incurred clearing debris away from the cask body. This dose is estimated at 50 mrem, assuming 2 hours is spent near the cask exterior surface.

Chapter 12

C 3.1 NAC-UMS® SYSTEM Integrity

C 3.1.2 CANISTER Vacuum Drying Pressure

BASES

BACKGROUND

A TRANSFER CASK with an empty CANISTER is placed into the spent fuel pool and loaded with fuel assemblies meeting the requirements of the Approved Contents Limits. A shield lid is then placed on the CANISTER. The TRANSFER CASK and CANISTER are raised out of the spent fuel pool. The TRANSFER CASK and CANISTER are then moved to a preparation area, where dose rates are measured and the CANISTER shield lid is welded to the CANISTER shell and the lid weld is examined, pressure tested, and leak tested. The water is drained from the CANISTER, and CANISTER cavity vacuum drying is performed. The CANISTER cavity is then backfilled with helium. Additional dose rates are measured, and the CANISTER vent port and drain port covers and structural lid are installed and welded. Non-destructive examinations are performed on the welds. Contamination measurements are completed prior to moving the TRANSFER CASK and CANISTER in position to transfer the CANISTER to the CONCRETE CASK. After the CANISTER is transferred, the CONCRETE CASK is then moved to the ISFSI. Average CONCRETE CASK dose rates are measured at the ISFSI pad.

CANISTER cavity vacuum drying is utilized to remove residual moisture from the CANISTER cavity after the water is drained from the CANISTER. Any water not drained from the CANISTER cavity evaporates due to the vacuum. This is aided by the temperature increase, due to the heat generation of the fuel.

APPLICABLE SAFETY ANALYSIS

The confinement of radioactivity (including fission product gases, fuel fines, volatiles, and crud) during the storage of design basis spent fuel in the CANISTER is ensured by the multiple confinement boundaries and systems. The barriers relied on are: the fuel pellet matrix, the metallic fuel cladding tubes where the fuel pellets are contained, and the CANISTER where the fuel assemblies are stored. Long-term integrity of the fuel and cladding depends on storage in an inert atmosphere. This is accomplished by removing water from the CANISTER and backfilling the cavity with helium. The thermal analysis assumes that the CANISTER cavity is dried and filled with helium.

(continued)

APPLICABLE SAFETY ANALYSIS (continued)	The heat-up of the CANISTER and contents will occur during CANISTER vacuum drying, but is controlled by LCO 3.1.1. Dryness of the CANISTER (e.g., no free water) is verified by holding a vacuum pressure below or equal to a selected pressure for a specified period of time. The vacuum pressure selected for this verification is related to the temperature of the environment the CANISTER is in while vacuum drying (i.e., either the spent fuel pool (SFP) water temperature for CANISTERS vacuum dried in the SFP, or the cask preparation area ambient air temperature for CANISTERS vacuum dried outside the SFP). The nominal vacuum pressure selected for the verification in the LCO is 10 mm of Hg, which corresponds to approximately one-half of the vapor pressure of water at 70°F. The temperature of the drying environment at facilities loading CANISTERS is expected to exceed this temperature under most circumstances. In the event that either SFP water temperature (for CANISTERS vacuum dried in the SFP) or the cask preparation area ambient air temperature (for CANISTERS vacuum dried outside the SFP) is below 65°F, a lower vacuum pressure of 5 mm of Hg shall be used as the test criterion. For either verification, a 10-minute hold period has been selected. Holding the vacuum pressure below 10 mm of Hg for 10 minutes (or under 5 mm at SFP or ambient temperatures <65°F), with the CANISTER isolated from the vacuum pump and the pump turned off, demonstrates that there is no free water in the CANISTER, since the presence of any significant free water would result in the vacuum pressure increasing in a short period of time to the vapor pressure corresponding to the average temperature of the CANISTER and contents, which is significantly greater than the selected vacuum pressure.
LCO	A vacuum pressure of ≤10 mm of mercury, as specified in this LCO, indicates that liquid water has evaporated and been removed from the CANISTER cavity. Removing water from the CANISTER cavity helps to ensure the long-term maintenance of fuel cladding integrity.
APPLICABILITY	Cavity vacuum drying is performed during LOADING OPERATIONS before the TRANSFER CASK holding the CANISTER is moved to transfer the CANISTER into the CONCRETE CASK. Therefore, the vacuum requirements do not apply after the CANISTER is backfilled with helium and leak tested prior to TRANSPORT OPERATIONS and STORAGE OPERATIONS.
ACTIONS	A note has been added to the ACTIONS, which states that, for this LCO, separate Condition entry is allowed for each CANISTER. This is acceptable, since the Required Actions for each Condition provide appropriate compensatory measures for each CANISTER not meeting the LCO. Subsequent CANISTERs that do not meet the LCO are governed by subsequent Condition entry and application of associated Required Actions.

(continued)

ACTIONS (continued)

air inlet and outlet screens will ensure that the accident temperature limits are not exceeded during the time that the remainder of the air linlet and outlet screens are returned to OPERABLE status.

AND

A.2

In addition to Required Action A.1, the fuel loading per the Approved Contents condition of the CoC is verified.

The Completion Time for this Required Action of 7 days will ensure that the CANISTER remains in a safe, analyzed condition.

AND

A.3

In addition to Required Actions A.1 and A.2 that ensure the adequate heat removal capability and verify the fuel loading, restoring the CONCRETE CASK Heat Removal System to OPERABLE is not an immediate concern. Therefore, restoring it within 25 days is considered a reasonable period of time.

B.1

If the Required Actions A.1, A.2 or A.3 cannot be met, an engineering evaluation is performed to verify that the CONCRETE CASK heat removal system is OPERABLE.

The Completion Time for this Required Action of 5 days will ensure that the CANISTER remains in a safe, analyzed condition.

OR

B.2

Place the affected NAC-UMS SYSTEM in a safe condition.

The Completion Time for this Required Action is 5 days. Requiring B.2 action completion within 5 days will ensure that the NAC-UMS SYSTEM is maintained in a safe condition.

(continued)

SURVEILLANCE REQUIREMENTS	SR 3.1.6.1 The long-term integrity of the stored fuel is dependent on the ability of the CONCRETE CASK to reject heat from the CANISTER to the environment. Visual observation that all four air inlet and outlet screens are unobstructed and intact ensures that air flow past the CANISTER is occurring and heat transfer is taking place. Complete blockage of one or more air inlet or outlet screens renders the heat removal system inoperable and this LCO is not met. Partial blockage of one or more air inlet or outlet screens does not constitute inoperability of the heat removal system. However, corrective actions should be taken promptly to remove the obstruction and restore full flow through the affected air inlet and outlet screens. Alternatively, based on the analyses, if the air temperature rise is less than the limits stated in the SR, adequate air flow and, therefore, adequate heat transfer is occurring to provide assurance of long-term fuel cladding integrity. The reference ambient temperature used to perform this Surveillance shall be measured at the ISFSI facility. The Frequency of 24 hours is reasonable based on the time necessary for CONCRETE CASK and CANISTER components to heat up to unacceptable temperatures assuming design basis heat loads, and allowing for corrective actions to take place upon discovery of the blockage of the air inlet and outlet screens. SR 3.1.6.2 The initial confirmation of the OPERABILITY of the CONCRETE CASK is established based on air temperature measurements at the CONCRETE CASK outlets and the ISFSI ambient, and verification that the air temperature rise is less than the limits stated in the SR. Following the initial confirmation, the continued OPERABILITY of the CONCRETE CASK shall be confirmed by one of the verification methods specified in SR 3.1.6.1. The specified Frequency of once between 5 and 30 days after beginning STORAGE OPERATIONS is reasonable and ensures that the CONCRETE CASK has reached thermal equilibrium and, therefore, the outlet air temperature measurements will reflect expected temperatures under normal operations. Completion of the measurements within 30 days of placement of the CONCRETE CASK into STORAGE OPERATIONS ensures that corrective actions can be taken to establish the OPERABLE status of the CONCRETE CASK within a reasonable period of time.
REFERENCES	1. FSAR Chapter 4 and Chapter 11, Section 11.1.2 and Section 11.2.13.