857

CLINCH RIVER BREEDER REACTOR PROJECT

50-537

RECEIVED
JUN 13 1975
U.S. NUCLEAR REGULATORY COMMISSION
Mail Section

PRELIMINARY SAFETY ANALYSIS REPORT

VOLUME 8

PROJECT MANAGEMENT CORPORATION

6428

TABLE OF CONTENTS

Section		Page
1.0	INTRODUCTION AND GENERAL DESCRIPTION OF THE PLANT	1.1-1
1.1	INTRODUCTION	1.1-1
1.1.1	General Information	1.1-2
1.1.2	Overview of Safety Design Approach	1.1-3
1.1.3	Applicability of Regulatory Guides	1.1-5
1.2	GENERAL PLANT DESCRIPTION	1.2-1
1.2.1	Site	1.2-1
1.2.2	Engineered Safety Features	1.2-2
1.2.3	Reactor, Heat Transport and Related Systems	1.2-2
1.2.4	Steam Generator - Turbine and Related Systems	1.2-3
1.2.5	Offsite and Onsite Power	1.2-5
1.2.6	Instrumentation, Control and Protection	1.2-6
1.2.7	Auxiliary Systems	1.2-7
1.2.8	Refueling System	1.2-8
1.2.9	Radwaste Disposal System	1.2-9
1.2.10	Reactor Confinement/Containment System	1.2-9
1.2.11	Major Structures	1.2-10
1.3	COMPARISON TABLES	1.3-1
1.3.1	Comparisons with Similar Designs	1.3-1
1.3.2	Detailed Comparison with Fast Flux Test Facility	1.3-2
1.4	IDENTIFICATION OF PROJECT PARTICIPANTS	1.4-1
1.4.1	Functions, Responsibilities and Authorities of Project Participants	1.4-2
1.4.2	Description of Organizations	1.4-3
1.4.3	Interrelationships with Contractors and Suppliers	1.4-21a
1.4.4	General Qualification Requirement of CRBRP Project Participants	1.4-22
1.5	REQUIREMENTS FOR FURTHER TECHNICAL INFORMATION	1.5-1
1.5.1	Information Concerning the Adequacy of a New Design	1.5-2
1.5.2	Information Concerning Margin of Conservatism of Proven Design	1.5-28
1.5.3	References	1.5-47

TABLE OF CONTENTS (Cont'd.)

Section		Page
1.6	MATERIAL INCORPORATED BY REFERENCE	1.6-1
1.6.1	Introduction	1.6-1
1.6.2	References	1.6-1
	Appendix 1-A Flow Diagram Symbols	1.A-1
2.0	SITE CHARACTERISTICS	2.1-1
2.1	GEOGRAPHY AND DEMOGRAPHY	2.1-1
2.1.1	Site Location and Layout	2.1-1
2.1.2	Site Description	2.1-2
2.1.3	Population and Population Distribution	2.1-4
2.1.4	Uses of Adjacent Lands and Waters	2.1-8
2.2	NEARBY INDUSTRIAL, TRANSPORTATION AND MILITARY FACILITIES	2.2-1
2.2.1	Locations, Routes, and Descriptions	2.2-1
2.2.2	Evaluations	2.2-3
2.2.3	New Facility/Land Use Requirements	2.2-4c
2.3	METEOROLOGY	2.3-1
2.3.1	Regional Climatology	2.3-1
2.3.2	Local Meteorology	2.3-4
2.3.3	On-site Meteorological Monitoring Program	2.3-9
2.3.4	Short-Term (Accident) Diffusion Estimates	2.3-9
2.3.5	Long-Term (Average) Diffusion Estimates	2.3-13
2.4	HYDROLOGIC ENGINEERING	2.4-1
2.4.1	Hydrologic Description	2.4-1
2.4.2	Floods	2.4-6
2.4.3	Probable Maximum Flood (PMF) on Streams and Rivers	2.4-10
2.4.4	Potential Dam Failures (Seismically and Otherwise Induced)	2.4-21
2.4.7	Ice Flooding	2.4-31
2.4.8	Cooling Water Canals and Reservoirs	2.4-31a
2.4.9	Channel Diversions	2.4-32
2.4.10	Flooding Protection Requirements	2.4-32
2.4.11	Low Water Considerations	2.4-33
2.4.12	Environmental Acceptance of Effluents	2.4-42
2.4.13	Groundwater	2.4-44
2.4.14	Technical Specification and Emergency Operation Requirement	2.4-55

TABLE OF CONTENTS (Cont'd.)

Section		Page
2.5	GEOLOGY AND SEISMOLOGY	2.5-1
2.5.1	Basic Geologic and Seismic Information	2.5-1
2.5.2	Vibratory Ground Motion	2.5-20
2.5.3	Surface Faulting	2.5-27
2.5.4	Stability of Subsurface Materials	2.5-32
2.5.5	Slope Stability	2.5-48a
	Appendix 2-A Field Investigative Procedures	2A-1
	Appendix 2-B Laboratory Test Procedures	2B-1
	Appendix 2-C Report of Test Grouting Program	2C-1
	Appendix 2-D Report of Engineering Properties for Crushed Stone Materials from Commercial Suppliers	2D-1
	Appendix 2-E Extracts from U.S. Atomic Energy Commission AEC Manual	2E-1
	Supplement 1 to Chapter 2 Deleted	
	Supplement 2 to Chapter 2 Question and Responses Related to Chapter Two Information and Critical For NRC Docketing of CRBRP Environmental Report	1
3.0	DESIGN CRITERIA - STRUCTURES, COMPONENTS EQUIPMENT AND SYSTEMS	3.1-1
3.1	CONFORMANCE WITH GENERAL DESIGN CRITERIA	3.1-1
3.1.1	Introduction and Scope	3.1-1
3.1.2	Definitions and Explanations	3.1-2
3.1.3	Conformance with CRBRP General Design Criteria	3.1-8
3.2	CLASSIFICATIONS OF STRUCTURES, SYSTEMS, AND COMPONENTS	3.2-1
3.2.1	Seismic Classifications	3.2-1
3.2.2	Safety Classifications	3.2-2
3.3	WIND AND TORNADO LOADINGS	3.3-1
3.3.1	Wind Loadings	3.3-1
3.3.2	Tornado Loadings	3.3-2
3.4	WATER LEVEL (FLOOD) DESIGN	3.4-1
3.4.1	Flood Protection	3.4-1
3.4.2	Analysis Procedures	3.4-1a

TABLE OF CONTENTS (Cont'd.)

Section		Page
3.5	MISSILE PROTECTION	3.5-1
3.5.1	Missile Barrier and Loadings	3.5-4
3.5.2	Missile Selection	3.5-4a
3.5.3	Selected Missiles	3.5-7
3.5.4	Barrier Design Procedures	3.5-10
3.5.5	Missile Barrier Features	3.5-13c
3.6	PROTECTION AGAINST DYNAMIC EFFECTS ASSOCIATED WITH THE POSTULATED RUPTURE OF PIPING	3.6-1
3.6.1	Systems In Which Pipe Breaks are Postulated	3.6-1
3.6.2	Pipe Break Criteria	3.6-2
3.6.3	Design Loading Combinations	3.6-2
3.6.4	Dynamic Analysis	3.6-3
3.6.5	Protective Measures	3.6-8
3.7	SEISMIC DESIGN	3.7-1
3.7.1	Seismic Input	3.7-1
3.7.2	Seismic System Analysis	3.7-4a
3.7.3	Seismic Subsystem Analysis	3.7-11
3.7.4	Seismic Instrumentation Program	3.7-16
3.7.5	Seismic Design Control	3.7-20
	Appendix to Section 3.7 Seismic Design Criteria	3.7-A.1
3.8	DESIGN OF CATEGORY I STRUCTURES	3.8-1
3.8.1	Concrete Containment (Not Applicable)	3.8-1
3.8.2	Steel Containment System	3.8-1
3.8.3	Concrete and Structural Steel Internal Structures of Steel Containment	3.8-8
3.8.4	Other Seismic Category I Structures	3.8-22a
3.8.5	Foundation and Concrete Supports	3.8-35
	Appendix 3.8A Buckling Stress Criteria	3.8A-1
	Appendix 3.8-B Cell Liner Design Criteria	3.8-B.1
	Appendix 3.8-C Catch Pan and Fire Suppression Deck Design Criteria	3.8-C.1
3.9	MECHANICAL SYSTEMS AND COMPONENTS	3.9-1
3.9.1	Dynamic System Analysis and Testing	3.9-1
3.9.2	ASME Code Class 2 and 3 Components	3.9-3a
3.9.3	Components Not Covered by ASME Code	3.9-5
3.10	SEISMIC DESIGN OF CATEGORY I INSTRUMENTATION AND ELECTRICAL EQUIPMENT	3.10-1
3.10.1	Seismic Design Criteria	3.10-1

TABLE OF CONTENTS (Cont'd.)

Section		Page
3.10.2	Analysis, Testing Procedures and Restraint Measures	3.10-3
3.11	ENVIRONMENTAL DESIGN OF MECHANICAL AND ELECTRICAL EQUIPMENT	3.11-1
3.11.1	Equipment Identification	3.11-1
3.11.2	Qualification Test and Analysis	3.11-1
3.11.3	Qualification Test Results	3.11-1
3.11.4	Loss of Ventilation	3.11-2
3.11.5	Special Considerations	3.11-2
3A.0	SUPPLEMENTARY INFORMATION ON SEISMIC CATEGORY I STRUCTURES	3A.1-1
3A.1	Inner Cell System	3A.1-1
3A.2	Head Access Area	3A.2-1
3A.3	Control Building	3A.3-1
3A.4	Reactor Service Building (RSB)	3A.4-1
3A.5	Steam Generator Building	3A.5-1
3A.6	Diesel Generator Building	3A.6-1
3A.7	Deleted	
3A.8	Cell Liner Systems	3A.8-1
4.0	REACTOR	4.1-1
4.1	SUMMARY DESCRIPTION	4.1-1
4.1.1	Lower Internals	4.1-1
4.1.2	Upper Internals	4.1-3
4.1.3	Core Restraint	4.1-4
4.1.4	Fuel Blanket and Removable Radial Shield Regions	4.1-4
4.1.5	Design and Performance Characteristics	4.1-9
4.1.6	Loading Conditions and Analysis Techniques	4.1-9
4.1.7	Computer Codes	4.1-10
4.2	MECHANICAL DESIGN	4.2-1
4.2.1	Fuel and Blanket Design	4.2-1
4.2.2	Reactor Vessels Internals	4.2-118
4.2.3	Reactivity Control Systems	4.2-228
4.3	NUCLEAR DESIGN	4.3-1
4.3.1	Design Bases	4.3-1
4.3.2	Description	4.3-3
4.3.3	Analytical Methods	4.3-69
4.3.4	Changes	

Amend. 68
May 1982

TABLE OF CONTENTS (Cont'd.)

Section		Page
4.4	THERMAL AND HYDRAULIC DESIGN	4.4-1
4.4.1	Design Bases	4.4-1
4.4.2	Description	4.4-4
4.4.3	Evaluation	4.4-45
4.4.4	Testing and Verification	4.4-75
4.4.5	Core Instrumentation	4.4-80
5.0	HEAT TRANSPORT AND CONNECTED SYSTEMS	5.1-1
5.1	SUMMARY DESCRIPTION	5.1-1a
5.1.1	Reactor Vessel, Closure Head, and Guard Vessel	5.1-1a
5.1.2	Primary Heat Transport System	5.1-2
5.1.3	Intermediate Heat Transport System	5.1-5
5.1.4	Steam Generator System	5.1-7
5.1.5	Residual Heat Removal System	5.1-8
5.1.6	Auxiliary Liquid Metal System	5.1-9
5.1.7	Features for Heat Transport System Safety	5.1-10
5.1.8	Physical Arrangement	5.1-11
5.2	REACTOR VESSEL, CLOSURE HEAD, AND GUARD VESSEL	5.2-1
5.2.1	Design Basis	5.2-1
5.2.2	Design Parameters	5.2-4b
5.2.3	Special Processes for Fabrication and Inspection	5.2-7
5.2.4	Features for Improved Reliability	5.2-8
5.2.5	Quality Assurance Surveillance	5.2-10d
5.2.6	Materials and Inspections	5.2-11
5.2.7	Packing, Packaging, and Storage	5.2-11a
	Appendix 5.2.A Modifications to the High Temperature Design Rules for Austenitic Stainless Steel	5.2A-1
5.3	PRIMARY HEAT TRANSPORT SYSTEM (PHTS)	5.3-1
5.3.1	Design Bases	5.3-1
5.3.2	Design Description	5.3-9
5.3.3	Design Evaluation	5.3-33
5.3.4	Tests and Inspections	5.3-72
5.4	INTERMEDIATE HEAT TRANSPORT SYSTEM (IHTS)	5.4-1
5.4.1	Design Basis	5.4-1
5.4.2	Design Description	5.4-6
5.4.3	Design Evaluation	5.4-12

Amend. 68
May 1982

TABLE OF CONTENTS (Cont'd.)

Section		Page
5.5	STEAM GENERATOR SYSTEM (SGS)	5.5-1
5.5.1	Design Bases	5.5-1
5.5.2	Design Description	5.5-5
5.5.3	Design Evaluation	5.5-17
5.6	RESIDUAL HEAT REMOVAL SYSTEMS	5.6-1
5.6.1	Steam Generator Auxiliary Heat Removal System (SGAHRS)	5.6-1b
5.6.2	Direct Heat Removal Service (DHRS)	5.6-20
5.7	OVERALL HEAT TRANSPORT SYSTEM EVALUATION	5.7-1
5.7.1	Startup and Shutdown	5.7-1
5.7.2	Load Following Characteristics	5.7-2
5.7.3	Transient Effects	5.7-2a
5.7.4	Evaluation of Thermal Hydraulic Characteristics and Plant Design Heat Transport System Design Transient Summary	5.7-6
6.0	ENGINEERED SAFETY FEATURES	6.1-1
6.1	GENERAL	6.1-1
6.2	CONTAINMENT SYSTEMS	6.2-1
6.2.1	Confinement/Containment Functional Design	6.2-1
6.2.2	Containment Heat Removal	6.2-9
6.2.3	Containment Air Purification and Cleanup System	6.2-9
6.2.4	Containment Isolation Systems	6.2-10
6.2.5	Annulus Filtration System	6.2-14
6.2.6	Reactor Service Building (RSB) Filtration System	6.2-16
6.2.7	Steam Generator Building Aerosol Release Mitigation System Functional Design	6.2-17
6.3	HABITABILITY SYSTEMS	6.3-1
6.3.1	Habitability System Functional Design	6.3-1
6.4	CELL LINER SYSTEM	6.4-1
6.4.1	Design Base	6.4-1
6.4.2	System Design	6.4-1
6.4.3	Design Evaluation	6.4-1
6.4.4	Tests and Inspections	6.4-1
6.4.5	Instrumentation Requirements	6.4-1

Amend. 68
May 1982

TABLE OF CONTENTS (Cont'd.)

Section		Page
6.5	CATCH PAN	6.5-1
6.5.1	Design Base	6.5-1
6.5.2	System Design Description and Evaluation	6.5-1
6.5.3	Tests and Inspections	6.5-1
6.5.4	Instrumentation Requirements	6.5-1
7.0	INSTRUMENTATION AND CONTROLS	7.1-1
7.1	INTRODUCTION	7.1-1
7.1.1	Identification of Safety Related Instrumentation and Control Systems	7.1-1
7.1.2	Identification of Safety Criteria	7.1-1
7.2	REACTOR SHUTDOWN SYSTEM	7.2-1
7.2.1	Description	7.2-1
7.2.2	Analysis	7.2-13
7.3	ENGINEERED SAFETY FEATURE INSTRUMENTATION AND CONTROL	7.3-1
7.3.1	Containment Isolation System	7.3-1
7.3.2	Analysis	7.3-3
7.4	INSTRUMENTATION AND CONTROL SYSTEMS REQUIRED FOR SAFE SHUTDOWN	7.4-1
7.4.1	Steam Generator Auxiliary Heat Removal Instrumentation and Control Systems	7.4-1
7.4.2	Outlet Steam Isolation Instrumentation and Control System	7.4-6
7.4.3	Remote Shutdown System	7.4-8a
7.5	INSTRUMENTATION AND MONITORING SYSTEM	7.5-1
7.5.1	Flux Monitoring System	7.5-1
7.5.2	Heat Transport Instrumentation System	7.5-5
7.5.3	Reactor and Vessel Instrumentation	7.5-13
7.5.4	Fuel Failure Monitoring System	7.5-14
7.5.5	Leak Detection Systems	7.5-18
7.5.6	Sodium-Water Reaction Pressure Relief System (SWRPRS) Instrumentation and Controls	7.5-30
7.5.7	Containment Hydrogen Monitoring	7.5-33b
7.5.8	Containment Vessel Temperature Monitoring	7.5-33b
7.5.9	Containment Pressure Monitoring	7.5-33b
7.5.10	Containment Atmosphere Temperature	7.5-33c
7.5.11	Post Accident Monitoring	7.5-33c

TABLE OF CONTENTS (Cont'd.)

Section		Page
7.6	OTHER INSTRUMENTATION AND CONTROL SYSTEMS REQUIRED FOR SAFETY	7.6-1
7.6.1	Plant Service Water and Chilled Water Instrumentation and Control Systems	7.6-1
7.6.2	Deleted	
7.6.3	Direct Heat Removal Service (DHRS) Instrumentation and Control System	7.6-3
7.6.4	Heating, Ventilating, and Air Conditioning Instrumentation and Control System	7.6-3e
7.6.5	SGB Flooding Protection Subsystem	7.6-3f
7.7	INSTRUMENTATION AND CONTROL SYSTEMS NOT REQUIRED FOR SAFETY	7.7-1
7.7.1	Plant Control System Description	7.7-1
7.7.2	Design Analysis	7.7-16
7.8	PLANT DATA HANDLING AND DISPLAY SYSTEM	7.8-1
7.8.1	Design Description	7.8-1
7.8.2	Design Analysis	7.8-2
7.9	OPERATING CONTROL STATIONS	7.9-1
7.9.1	Design Basis	7.9-1
7.9.2	Control Room	7.9-1
7.9.3	Local Control Stations	7.9-6
7.9.4	Communications	7.9-6
7.9.5	Design Evaluation	7.9-6
8.0	ELECTRIC POWER	8.1-1
8.1	INTRODUCTION	8.1-1
8.1.1	Utility Grid and Interconnections	8.1-1
8.1.2	Plant Electrical Power System	8.1-1
8.1.3	Criteria and Standards	8.1-3
8.2	OFFSITE POWER SYSTEM	8.2-1
8.2.1	Description	8.2-1
8.2.2	Analysis	8.2-4
8.3	ON-SITE POWER SYSTEMS	8.3-1
8.3.1	AC Power Systems	8.3-1
8.3.2	DC Power System	8.3-44

TABLE OF CONTENTS (Cont'd.)

Section		Page
9.0	AUXILIARY SYSTEMS	9.1-1
9.1	FUEL STORAGE AND HANDLING	9.1-1
9.1.1	New Fuel Storage	9.1-3
9.1.2	Spent Fuel Storage	9.1-5
9.1.3	Spent Fuel Cooling and Cleanup System	9.1-20
9.1.4	Fuel Handling System	9.1-33
9.2	NUCLEAR ISLAND GENERAL PURPOSE MAINTENANCE SYSTEM	9.2-1
9.2.1	Design Basis	9.2-1
9.2.2	System Description	9.2-1
9.2.3	Safety Evaluation	9.2-3
9.2-4	Tests and Inspections	9.2-3
9.2-5	Instrumentation Applications	9.2-4
9.3	AUXILIARY LIQUID METAL SYSTEM	9.3-1
9.3.1	Sodium and NaK Receiving System	9.3-1a
9.3.2	Primary Na Storage and Processing	9.3-2
9.3.3	EVS Sodium Processing	9.3-9a
9.3.4	Primary Cold Trap NaK Cooling System	9.3-10
9.3.5	Intermediate Na Processing System	9.3-12
9.4	PIPING AND EQUIPMENT ELECTRICAL HEATING	9.4-1
9.4.1	Design Bases	9.4-1
9.4.2	Systems Description	9.4-2
9.4.3	Safety Evaluation	9.4-3
9.4.4	Tests and Inspections	9.4-3b
9.4.5	Instrumentation Application	9.4-3b
9.5	INERT GAS RECEIVING AND PROCESSING SYSTEM	9.5-1
9.5.1	Argon Distribution Subsystem	9.5-2
9.5.2	Nitrogen Distribution System	9.5-6
9.5.3	Safety Evaluation	9.5-10
9.5.4	Tests and Inspections	9.5-12
9.5.5	Instrumentation Requirements	9.5-12
9.6	HEATING, VENTILATING AND AIR CONDITIONING SYSTEM	9.6-1
9.6.1	Control Building HVAC System	9.6-1
9.6.2	Reactor Containment Building	9.6-12
9.6.3	Reactor Service Building HVAC System	9.6-25
9.6.4	Turbine Generator Building HVAC System	9.6-37
9.6.5	Diesel Generator Building HVAC System	9.6-40
9.6.6	Steam Generator Building HVAC System	9.6-45

TABLE OF CONTENTS (Cont'd.)

Section		Page
9.7	CHILLED WATER SYSTEMS	9.7-1
9.7.1	Normal Chilled Water System	9.7-1
9.7.2	Emergency Chilled Water System	9.7-4
9.7.3	Prevention of Sodium or NaK/Water Interactions	9.7-9
9.7.4	Secondary Coolant Loops (SCL)	9.7-12
9.8	IMPURITY MONITORING AND ANALYSIS SYSTEM	9.8-1
9.8.1	Design Basis	9.8-1
9.8.2	Design Description	9.8-2
9.8.3	Design Evaluation	9.8-5
9.8.4	Tests and Inspection	9.8-7
9.8.5	Instrumentation Requirements	9.8-8
9.9	SERVICE WATER SYSTEMS	9.9-1
9.9.1	Normal Plant Service Water System	9.9-1
9.9.2	Emergency Plant Service Water System	9.9-2
9.9.3	Secondary Service Closed Cooling Water System	9.9-4
9.9.5	River Water Service	9.9-11
9.10	COMPRESSED GAS SYSTEM	9.10-1
9.10.1	Service Air and Instrument Air Systems	9.10-1
9.10.2	Hydrogen System	9.10-3a
9.10.3	Carbon Dioxide System	9.10-4
9.11	COMMUNICATIONS SYSTEM	9.11-1
9.11.1	Design Bases	9.11-1
9.11.2	Description	9.11-3
9.12	LIGHTING SYSTEMS	9.12-1
9.12.1	Normal Lighting System	9.12-1
9.12.2	Standby Lighting Systems	9.12-2
9.12.3	Emergency Lighting System	9.12-3
9.12.4	Design Evaluation	9.12-4
9.13	PLANT FIRE PROTECTION SYSTEM	9.13-1
9.13.1	Non-Sodium Fire Protection System	9.13-1
9.13.2	Sodium Fire Protection System (SFPS)	9.13-13
9.13A	Overall Fire Protection Requirements -- CRBRP Design Compared with APCSB 9.5-1 & ASB 9.5-1	9.13A-1
9.14	DIESEL GENERATOR AUXILIARY SYSTEM	9.14-1
9.14.1	Fuel Oil Storage and Transfer System	9.14-1

Amend. 68
May 1982

TABLE OF CONTENTS (Cont'd.)

Section		Page
9.14.2	Cooling Water System	9.14-2
9.14.3	Starting Air Systems	9.14-4
9.14.4	Lubrication System	9.14-5
9.15	EQUIPMENT AND FLOOR DRAINAGE SYSTEM	9.15-1
9.15.1	Design Bases	9.15-1
9.15.2	System Description	9.15-1
9.15.3	Safety Evaluation	9.15-2
9.15.4	Tests and Inspections	9.15-2
9.15.5	Instrumentation Application	9.15-2
9.16	RECIRCULATION GAS COOLING SYSTEM	9.16-1
9.16.1	Design Basis	9.16-1
9.16.2	System Description	9.16-1
9.16.3	Safety Evaluation	9.16-6
9.16.4	Tests and Inspection	9.16-7
9.16.5	Instrumentation and Control	9.16-7
10.0	STEAM AND POWER CONVERSION SYSTEM	10.1-1
10.1	SUMMARY DESCRIPTION	10.1-1
10.2	TURBINE GENERATOR	10.2-1
10.2.1	Design Bases	10.2-1
10.2.2	Description	10.2-1a
10.2.3	Turbine Missiles	10.2-5
10.2.4	Evaluation	10.2-9
10.3	MAIN STEAM SUPPLY SYSTEM	10.3-1
10.3.1	Design Bases	10.3-1
10.3.2	Description	10.3-1
10.3.3	Evaluation	10.3-2
10.3.4	Inspection and Testing Requirements	10.3-2
10.3.5	Water Chemistry	10.3-3
10.4	OTHER FEATURES OF STEAM AND POWER CONVERSION SYSTEM	10.4-1
10.4.1	Condenser	10.4-1
10.4.2	Condenser Air Removal System	10.4-2
10.4.3	Turbine Gland Sealing System	10.4.3
10.4.4	Turbine Bypass System	10.4-4
10.4.5	Circulating Water System	10.4-5
10.4.6	Condensate Cleanup System	10.4-7

Amend. 68
May 1982

TABLE OF CONTENTS (Cont'd.)

Section		Page
10.4.7	Condensate and Feedwater Systems	10.4-9
10.4.8	Steam Generator Blowdown System	10.4-14
11.0	RADIOACTIVE WASTE MANAGEMENT	11.1-1
11.1	SOURCE TERMS	11.1-1
11.1.1	Modes of Radioactive Waste Production	11.1-1
11.1.2	Activation Product Source Strength Models	11.1-2
11.1.3	Fission Product and Plutonium Release Models	11.1-5
11.1.4	Tritium Production Sources	11.1-7
11.1.5	Summary of Design Bases for Deposition of Radioactivity in Primary Sodium on Reactor and Primary Heat Transfer Surfaces and Within Reactor Auxiliary Systems	11.1-7
11.1.6	Leakage Rates	11.1-10
11.2	LIQUID WASTE SYSTEM	11.2-1
11.2.1	Design Objectives	11.2-1
11.2.2	System Description	11.2-2
11.2.3	System Design	11.2-4
11.2.4	Operating Procedures and Performance Tests	11.2-5
11.2.5	Estimated Releases	11.2-6
11.2.6	Release Points	11.2-6
11.2.7	Dilution Factors	11.2-7
11.2.8	Estimated Doses	11.2-8
	Appendix 11.2A Dose Models: Liquid Effluents	11.2A-1
11.3	GASEOUS WASTE SYSTEM	11.3-1
11.3.1	Design Base	11.3-1
11.3.2	System Description	11.3-1
11.3.3	System Design	11.3-10
11.3.4	Operating Procedures and Performance Tests	11.3-11a
11.3.5	Estimated Releases	11.3-14
11.3.6	Release Points	11.3-15
11.3.7	Dilution Factors	11.3-17
11.3.8	Dose Estimates	11.3-17
	Appendix 11.3A Dose Models: Gaseous Effluents	11.3A-1
11.4	PROCESS AND EFFLUENT RADIOLOGICAL MONITORING SYSTEM	11.4-1
11.4.1	Design Objectives	11.4-1
11.4.2	Continuous Monitoring/Sampling	11.4-2
11.4.3	Sampling	11.4-3

Amend. 68
May 1982

TABLE OF CONTENTS (Cont'd.)

Section		Page
11.5	SOLID WASTE SYSTEM	11.5-1
11.5.1	Design Objectives	11.5-1
11.5.2	System Inputs	11.5-1
11.5.3	Equipment Description	11.5-1
11.5.4	Expected Volumes	11.5-3
11.5.5	Packaging	11.5-4
11.5.6	Storage Facilities	11.5-4
11.5.7	Shipment	11.5-4
11.6	OFFSITE RADIOLOGICAL MONITORING PROGRAM	11.6-1
11.6.1	Expected Background	11.6-1
11.6.2	Critical Pathways to Man	11.6-2
11.6.3	Sampling Media, Locations and Frequencies	11.6-4
11.6.4	Analytical Sensitivity	11.6-4
11.6.5	Data Analysis and Presentation	11.6-4
11.6.6	Program Statistical Sensitivity	11.6-5
12.0	RADIATION PROTECTION	12.1-1
12.1	SHIELDING	12.1-1
12.1.1	Design Objectives	12.1-1
12.1.2	Design Description	12.1-3
12.1.3	Source Terms	12.1-13
12.1.4	Area Radiation Monitoring	12.1-23
12.1.5	Estimates of Exposure	12.1-24
	Appendix to Section 12.1	12.1A-1
12.2	VENTILATION	12.2-1
12.2.1	Design Objectives	12.2-1
12.2.2	Design Description	12.2-1
12.2.3	Source Terms	12.2-3
12.2.4	Airborne Radioactivity Monitoring	12.2-3
12.2.5	Inhalation Doses	12.2-5
12.3	HEALTH PHYSICS PROGRAM	12.3-1
12.3.1	Program Objectives	12.3-1
12.3.2	Facilities and Equipment	12.3-3
12.3.3	Personnel Dosimetry	12.3-6
12.3.4	Estimated Occupancy Times	12.3-7
	Appendix 12A - Information Related to ALARA for Occupational Radiation Exposures	12A-1

TABLE OF CONTENTS (Cont'd.)

Section		Page
13.0	CONDUCT OF OPERATIONS	13.1-1
13.1	ORGANIZATIONAL STRUCTURE OF THE APPLICANT	13.1-1
13.1.1	Project Organization	13.1-1
13.1.2	Operating Organization	13.1-5
13.1.3	Qualification Requirements for Nuclear Plant Personnel	13.1-12
13.2	TRAINING PROGRAM	13.2-1
13.2.1	Program Description	13.2-1
13.2.2	Retraining Program	13.2-6
13.2.3	Replacement Training	13.2-6
13.2.4	Records	13.2-6
13.3	EMERGENCY PLANNING	13.3-1
13.3.1	General	13.3-1
13.3.2	Emergency Organization	13.3-2
13.3.3	Coordination with Offsite Groups	13.3-5
13.3.4	Emergency Action Levels	13.3-6
13.3.5	Protective Measures	13.3-7
13.3.6	Review and Updating	13.3-7
13.3.7	Medical Support	13.3-7
13.3.8	Exercises and Drills	13.3-8
13.3.9	Training	13.3-8
13.3.10	Recovery and Reentry	13.3-9
13.3.11	Implementation	13.3-9
	Appendix 13.3A	13.3A-1
13.4	REVIEW AND AUDIT	13.4-1
13.4.1	Review and Audit - Construction	13.4-1
13.4.2	Review and Audit - Test and Operation	13.4-1
13.5	PLANT PROCEDURES	13.5-1
13.5.1	General	13.5-1
13.5.2	Normal Operating Instructions	13.5-1
13.5.3	Abnormal Operating Instructions	13.5-2
13.5.4	Emergency Operating Instructions	13.5-2
13.5.5	Maintenance Instructions	13.5-3

Amend. 68
May 1982

TABLE OF CONTENTS (Cont'd.)

Section		Page
13.5.6	Surveillance Instructions	13.5-4
13.5.7	Technical Instructions	13.5-4
13.5.8	Sections Instruction Letters	13.5-4
13.5.9	Site Emergency Plans	13.5-4
13.5.10	Radiation Control Instructions	13.5-4
13.6	PLANT RECORDS	13.6-1
13.6.1	Plant History	13.6-1
13.6.2	Operating Records	13.6-1
13.6.3	Event Records	13.6-1
13.7	RADIOLOGICAL SECURITY	13.7-1
13.7.1	Organization and Personnel	13.7-1
13.7.2	Plant Design	13.7-3
13.7.3	Security Plan	13.7-6
14.0	INITIAL TESTS AND OPERATION	14.1-1
14.1	DESCRIPTION OF TEST PROGRAMS	14.1-1
14.1.1	Preoperational Test Programs	14.1-2
14.1.2	Startup Test Program	14.1-2
14.1.3	Administration of Test Program	14.1-3
14.1.4	Test Objectives of First-of-a-Kind Principal Design Features	14.1-6
14.2	AUGMENTATION OF OPERATOR'S STAFF FOR INITIAL TESTS AND OPERATION	14.2-1
15.0	ACCIDENT ANALYSES	15.1-1
15.1	INTRODUCTION	15.1-1
15.1.1	Design Approach to Safety	15.1-1
15.1.2	Requirements and Criteria for Assessment of Fuel and Blanket Rod Transient Performance	15.1-50
15.1.3	Control Rod Shutdown Rate and Plant Protection System Trip Settings	15.1-93
15.1.4	Effect of Design Changes on Analyses of Accident Events	15.1-105
15.2	REACTIVITY INSERTION DESIGN EVENTS - INTRODUCTION	15.2-1
15.2.1	Anticipated Events	15.2-5
15.2.2	Unlikely Events	15.2-34
15.2.3	Extremely Unlikely Events	15.2-51

Amend. 68
May 1982

TABLE OF CONTENTS (Cont'd.)

Section		Page
15.3	UNDERCOOLING DESIGN EVENTS - INTRODUCTION	15.3-1
15.3.1	Anticipated Events	15.3-6
15.3.2	Unlikely Events	15.3-29
15.3.3	Extremely Unlikely Events	15.3-38
15.4	LOCAL FAILURE EVENTS - INTRODUCTION	15.4-1
15.4.1	Fuel Assembly	15.4-2
15.4.2	Control Assemblies	15.4-42
15.4.3	Radial Blanket Assembly	15.4-51
15.5	FUEL HANDLING AND STORAGE EVENTS - INTRODUCTION	15.5-1
15.5.1	Anticipated Events (None)	15.5-4
15.5.2	Unlikely Events	15.5-4
15.5.3	Extremely Unlikely Events	15.5-23
15.6	SODIUM SPILLS - INTRODUCTION	15.6-1
15.6.1	Extremely Unlikely Events	15.6-4
15.7	OTHER EVENTS - INTRODUCTION	15.7-1
15.7.1	Anticipated Events	15.7-3
15.7.2	Unlikely Events	15.7-9
15.7.3	Extremely Unlikely Events	15.7-18
15.A	Appendix 15.A - Radiological Source Term for Assessment of Site Suitability	15.A-1
16.0	TECHNICAL SPECIFICATIONS	16.1-1
16.1	DEFINITIONS	16.1-1
16.1.1	Reactor Operating Condition	16.1-1
16.1.2	Reactor Core	16.1-2
16.1.3	Plant Protection System Instrumentation	16.1-3
16.1.4	Safety Limit	16.1-5
16.1.5	Limiting Safety System Setting (LSSS)	16.1-5
16.1.6	Limiting Conditions for Operation (LCO)	16.1-6
16.1.7	Surveillance Requirements	16.1-6
16.1.8	Containment Integrity	16.1-6
16.1.9	Abnormal Occurrence	16.1-6

TABLE OF CONTENTS (Cont'd.)

Section		Page
16.2	SAFETY LIMITS AND LIMITING SAFETY SYSTEM SETTINGS	16.2-1
16.2.1	Safety Limit, Reactor Core	16.2-1
16.2.2	Limiting Safety System Settings	16.2-1
16.3	LIMITING CONDITIONS FOR OPERATION	16.3-1
16.3.1	Reactor Operating Conditions	16.3-1
16.3.2	Primary Heat Transport System (PHTS)	16.3-2
16.3.3	Intermediate Heat Transport Coolant System	16.3-6
16.3.4	Steam Generation System (SGS)	16.3-7
16.3.5	Auxiliary Liquid Metal System	16.3-12
16.3.6	Inert Gas System Cover Gas Purification System	16.3-13
16.3.7	Auxiliary Cooling System	16.3-14
16.3.8	Containment Integrity	16.3-21
16.3.9	Auxiliary Electrical System	16.3-21
16.3.10	Refueling	16.3-24
16.3.11	Effluent Release	16.3-27
16.3.12	Reactivity and Control Rod Limits	16.3-31
16.3.13	Plant Protection System	16.3-34
16.4	SURVEILLANCE REQUIREMENTS	16.4-1
16.4.1	Operational Safety Review	16.4-1
16.4.2	Reactor Coolant System Surveillance	16.4-1
16.4.3	Containment Tests	16.4-3
16.4.4	HVAC and Radioactive Effluents	16.4-6
16.4.5	Emergency Power System Periodic Tests	16.4-10
16.4.6	Inert Gas System	16.4-13
16.4.7	Reactivity Anomalies	16.4-13
16.4.8	Pressure and Leakage Rate Test of RAPS Cold Box Cell	16.4-15
16.4.9	Pressure and Leakage Rate Test of RAPS Noble Gas Storage Vessel Cell	16.4-15a
16.5	DESIGN FEATURES	16.5-1
16.5.1	Site	16.5-1
16.5.2	Confinement/Containment	16.5-1
16.5.3	Reactor	16.5-2
16.5.4	Heat Transport System	16.5-5
16.5.5	Fuel Storage	16.5-7
16.6	ADMINISTRATIVE CONTROLS	16.6-1
16.6.1	Organization	16.6-1
16.6.2	Review and Audit	16.6-1
16.6.3	Instructions	16.6-4
16.6.4	Actions to be Taken in the Event of Reportable Occurrence in Plant Operation	16.6-6

Amend. 68
May 1982

TABLE OF CONTENTS (Cont'd.)

Section		Page
16.6.5	Action to be Taken in the Event a Safety Limit is Exceeded	16.6-6
16.6.6	Station Operating Records	16.6-6
16.6.7	Reporting Requirements	16.6-7
16.6.8	Minimum Staffing	16.6-8
17.0	QUALITY ASSURANCE - INTRODUCTION	17.0-1
17.0.1	Scope	17.0-1
17.0.2	Quality Philosophy	17.0-1
17.0.3	Participants	17.0-2
17.0.4	Project Phase Approach	17.0-3
17.0.5	Applicability	17.0-3
17.1	QUALITY ASSURANCE DURING DESIGN AND CONSTRUCTION	17.1-1
17.1.1	Organization	17.1-1
17.1.2	Quality Assurance Program	17.1-2
17.1.3	References Referred to in the Text	17.1-6
17.1.4	Acronyms Used in Chapter 17 Text and Appendices	17.1-6a

TABLE OF CONTENTS (Cont'd.)

Section		Page
Appendix 17A	A Description of the Owner Quality Assurance Program	17A-1
Appendix 17B	A Description of the Fuel Supplier Quality Assurance Program	17B-1
Appendix 17C	A Description of the Balance of Plant Supply Quality Assurance Program	17C-1
Appendix 17D	A Description of the ARD Lead Reactor Manufacturer Quality Assurance Program	17D-1
Appendix 17E	A Description of the Architect-Engineer Quality Assurance Program	17E-1
Appendix 17F	A Description of the Constructor Quality Assurance Program	17F-1
Appendix 17G	RDT Standard F2-2, 1973, Quality Assurance Program Requirements	17G-1
Appendix 17H	A Description of the ARD Reactor Manufacturer Quality Assurance Program	17H-1
Appendix 17I	A Description of the GE-ARSD-RM Quality Assurance Program	17I-1
Appendix 17J	A Description of the ESG-RM Quality Assurance Program	17J-1
Appendix A	Computer Codes	A-1
Appendix B	General Plant Transient Data	B-1
Appendix C	Safety Related Reliability Program	C.1-1
Appendix D	Deleted	
Appendix E	Deleted	
Appendix F	Deleted	
Appendix G	Plan for Inservice and Preservice Inspections	G-1
Appendix H	Post TMI Requirements	H-1

CLINCH RIVER

BREEDER REACTOR PROJECT

PRELIMINARY SAFETY ANALYSIS REPORT

CHAPTER 11

RADIOACTIVE WASTE MANAGEMENT

PROJECT MANAGEMENT CORPORATION

CHAPTER 11.0 - RADIOACTIVE WASTE MANAGEMENT

TABLE OF CONTENTS

		PAGE
11.0	RADIOACTIVE WASTE MANAGEMENT	
34 11.1	SOURCE TERMS	11.1-1
11.1.1	Modes of Radioactive Waste Production	11.1-1
11.1.2	Activation Product Source Strength Models	11.1-2
11.1.3	Fission Product and Plutonium Release Models	11.1-5
11.1.4	Tritium Production Sources	11.1-7
11.1.5	Summary of Design Basis for Deposition of Radioactivity in Primary Sodium on Reactor and Primary Heat Transfer Surfaces and within Reactor Auxiliary Systems	11.1-7
11.1.6	Leakage Rates	11.1-10
11.2	LIQUID WASTE SYSTEM	
11.2.1	Design Objectives	11.2-1
11.2.2	System Description	11.2-2
11.2.3	System Design	11.2-4
11.2.4	Operating Procedures and Performance Tests	11.2-5
11.2.4.1	Operating Procedures	11.2-5
11.2.4.2	Performance Tests	11.2-6
11.2.5	Estimated Releases	11.2-6
11.2.6	Release Points	11.2-6
11.2.6.1	Nuclear Island	11.2-6
11.2.6.2	Balance of Plant	11.2-7 30
11.2.7	Dilution Factors	11.2-7
11.2.8	Estimated Doses	11.2-8

		PAGE
11.2.8.1	Doses from Exposure to Liquid Effluents	11.2-9
50 Appendix to Section 11.2A		
11.3	GASEOUS WASTE SYSTEM	
50 11.3.1	Design Base	11.3-1
11.3.2	System Description	11.3-1
11.3.2.1	Process Flow	11.3-1
11.3.2.2	Gaseous Radioactive Waste Inputs to System	11.3-6
11.3.2.3	Activity Inventories and Concentrations	11.3-6
11.3.2.4	Release Path Calculations	11.3-7
11.3.2.5	Activity Release Tabulations	11.3-8
11.3.2.6	Radioactive Gaseous Site Boundary and Restricted Area Concentrations	11.3-9
11.3.3	System Design	11.3-10
11.3.3.1	General	11.3-10
11.3.3.2	Equipment	11.3-10
11.3.3.3	Instrumentation	11.3.11
11.3.4	Operating Procedures and Performance Tests	11.3-11
11.3.5	Estimated Releases	11.3-14
11.3.6	Release Points	11.3-15
11.3.6.1	Nuclear Island	11.3-15
34 11.3.6.2	Balance of Plant	11.3-16 31
11.3.7	Dilution Factors	11.3-17
11.3.8	Dose Estimates	11.3-17
11.3.8.1	Dose Rate Estimates	11.3-18
50 Appendix to Section 11.3A		

			PAGE
	11.4	PROCESS AND EFFLUENT RADIOLOGICAL MONITORING SYSTEM	
	11.4.1	Design Objectives	11.4-1
50	11.4.2	Continuous Monitoring/Sampling	11.4-2
	11.4.2.1	General Description	11.4-2
	11.4.2.2	Gaseous System Description	11.4-2
	11.4.2.2.1	Post Accident Containment Atmosphere Monitors	11.4-2
	11.4.2.2.2	Reactor Containment Isolation Monitors	11.4-2
	11.4.2.2.3	Building Ventilation Exhaust Monitors	11.4-3
50	11.4.2.2.4	Condenser Vacuum Pump Exhaust and Deaerator Continuous Vents Tritium Sampler	11.4-4
	11.4.2.2.5	Control Room Inlet Air Monitors	11.4-4
	11.4.2.2.6	Inerted Cell Atmosphere Monitors	11.4-4
	11.4.2.2.7	RAPS and CAPS Monitoring	11.4-4
	11.4.2.3	Liquid Systems Description	11.4-5
50	11.4.2.3.1	Radwaste Disposal System Liquid Effluent Monitor	11.4-5
34	11.4.2.4	Maintenance and Calibration	11.4-5
	11.4.3	Sampling	11.4-5
	11.4.3.1	Process Sampling	11.4-6
	11.4.3.1.1	Intermediate Level Activity Liquid Waste Collection Tanks	11.4-7
	11.4.3.1.2	Process Distillate Storage Tanks	11.4-7
	11.4.3.1.3	Low Level Activity Liquid Waste Collection Tanks	11.4-7
50	11.4.3.1.4	Low Level Activity Distillate Monitoring Tanks	11.4-8
	11.4.3.1.5	Concentrated Waste Collection Tank	11.4-8

		PAGE
11.4.3.2	Effluent Sampling	11.4-8
11.5	SOLID WASTE SYSTEM	
11.5.1	Design Objectives	11.5-1
11.5.2	System Inputs	11.5-1
11.5.3	Equipment Description	11.5-1
11.5.4	Expected Volumes	11.5-3
11.5.5	Packaging	11.5-4
11.5.6	Storage Facilities	11.5-4 1
11.5.7	Shipment	11.5-4
11.6	OFFSITE RADIOLOGICAL MONITORING PROGRAM	
11.6.1	Expected Background	11.6-1
11.6.2	Critical Pathways to Man	11.6-2
11.6.2.1	Doses from Gaseous Effluents	11.6-3
11.6.2.2	Internal Doses from Liquid Effluents	11.6-4
50 11.6.3	Sampling Media, Locations, and Frequencies	11.6-4
11.6.4	Analytical Sensitivity	11.6-4
11.6.5	Data Analysis and Presentation	11.6-5
11.6.6	Program Statistical Sensitivity	11.6-6

LIST OF TABLES

		PAGE
11.1-1	Activation Products in Primary Sodium Coolant	11.1-12
11.1-2	Activation Products - Core Structural Material (Stainless Steel 316)	11.1-13
50 11.1-3	Summary of Significant Information Used in CRBRP Corrosion Release Estimates	11.1-14
11.1-4	Fission Product Escape Fractions	11.1-15
11.1-4A	Comparison of Assumed Escape Fraction from Failed Fuel Rods with Measured Escape Fractions in B9D	11.1-16
11.1-5	Parameters Assumed for Plutonium Release to Primary Coolant	11.1-17
50 11.1-6	Radioactive Argon Cover Gas Activation and Fission Products Release Rates and Resulting Isotopic Release Rate	11.1-18
11.1-7	Activation, Fission Product and Plutonium Isotope Concentrations in the Primary Sodium Coolant During 30 Year Plant Lifetime - Design Values	11.1-19
11.1-8	Significant Corrosion, Fission Product and Released Fuel Activities on Wetted Surfaces at Reactor Shutdown	11.1-22
50 11.1-9	Radioisotope Inventory in Primary Cold Traps After 15 Years Operation	11.1-24
11.2-1	Design Annual Released Activity Inventory	11.2-12
11.2-2	Design Annual Concentration of Low and Intermediate Activity Level Input Streams	11.2-14
11.2-3	Design Activity Inventory Stored After Processing	11.2-16
11.2-4	Concentration of Radionuclides at Discharge to Clinch River Design Values	11.2-18
11.2-5	Equipment Description of Liquid Radwaste System	11.2-20

		PAGE	
11.2-5A	Indoor Radioactive Waste Tanks - Provisions to Prevent and Control Overflow Conditions	11.2-20a	25
11.2-6	Liquid Radwaste Radioisotope Annual Inventory - Design Values	11.2-21	
50 11.2-7	Design Effluent Concentrations, Maximum Permissible Effluent Concentrations (MPC) and Fraction of MPC at Discharge to River	11.2-23	
11.2-8	Estimated Cleaning Process Data-Intermediate Level System	11.2-25	
50 11.2-9	Dose Rates Received By An Individual Via Exposure to CRBRP Liquid Effluents (MREM/YR)	11.2-26	
11.2A-1	Water Body Width Factors for Estimating Gamma Exposure from Contaminated Sediment	11.2A-8	
11.2A-2	Dose Conversion Factors For Total Body and Skin Exposure Via Immersion In Water and Shoreline Deposits	11.2A-9	
11.2A-3	Dose Conversion Factors for Exposure Via Ingestion of Water to Radioactive Materials Released From The CRBRP Radwaste Systems	11.2A-12	
11.2A-4	Bioaccumulation Factors for Freshwater Aquatic Foods	11.2A-15	
11.2A-5	Summary of Variables Used in Radiological Dose Evaluations Which Are Not Specific to the CRBRP	11.2A-17	
11.2A-6	Maximum Permissible Concentration In Water, MPC_W, for Continuous Exposure to Radionuclides Released from the CRBRP Radwaste Systems	11.2A-18	
11.3-1	Radionuclide Input Rates to Reactor Cover Gas	11.3-19	
11.3-2	Gaseous Radionuclide Concentration in Reactor Cover Gas	11.3-20	
11.3-3	Activity Inventories in RAPS Process Vessels	11.3-21	
50 11.3-4	Activity Concentrations in RAPS Process Gas Streams	11.3-22	

		PAGE
11.3-5	RAPS Cryostill Performance Characteristics	11.3-23
11.3-6	Activity Inventories in CAPS Process Vessels	11.3-24
11.3-7	Activity Concentrations in CAPS Process Streams	11.3-25
11.3-8	CAPS Decontamination Factors	11.3-26
11.3-9	Radionuclide Release Rates and Release Paths for the Design Value Service Condition	11.3-27
11.3-10	Radionuclide Release Rates and Release Paths for the Expected Service Condition	11.3-29
11.3-11	Annual Activity Release Rates for the Design Service Condition	11.3-31
11.3-12	Annual Activity Release Rates for the Expected Service Condition	11.3-32
11.3-13	Radionuclide Concentrations in Head Access Area	11.3-33
11.3-14	Radionuclide Concentrations at Site Boundary from RSB Exhaust	11.3-34
11.3-15	Radionuclide Concentration at Site Boundary from RCB Exhaust	11.3-35
11.3-16	Tritium Concentration at Site Boundary from T.G. Building Exhaust	11.3-36 19
50 11.3-16a	Tritium Concentration at Site Boundary from IB Exhaust	11.3-36
11.3-17	Design Parameters of RAPS and CAPS Process Vessels	11.3-37
11.3-18	External Doses at Site Boundary to an Individual via Gaseous Effluents from CRBRP Design Release Points	11.3-38
50 11.3-19	Release Point Description of Internal Whole Body Doses Due to CRBRP Gaseous Effluents	11.3-39
34 11.3-20	Effluent Release Points Design Data	11.3-39a

		PAGE
11.3A-1	Radiological Data For Isotopes Released from CRBRP Radwaste Systems	11.3A-12
11.3A-2	Dose Conversion Factors for Exposure to Radioactive Materials Released from the CRBRP Gaseous Radwaste System	11.3A-15
11.3A-3	Maximum Permissible Concentration in Air (MPC_a) for Continuous Exposure to Radionuclides Released from the CRBRP Gaseous Radwaste System	11.3A-16
11.3A-4	Whole Body Dose Conversion Factors for Tritium Released During Normal Operating Conditions	11.3A-17
11.3A-5	Environmental Half-Lives of Radioisotopes Released from CRBRP Radwaste Systems	11.3A-18
11.3A-6	Summary of Variables Used in Radiological Dose Evaluations which are not Specific to the CRBRP	11.3A-20
11.4-1	Process and Effluent Sampling and Monitoring	11.4-10
50 11.5-1	Design Objectives in Solid Radwaste System Per Year in Terms of Annual Quantities	11.5-6
11.5-1A	Conceptual Primary Cold Trap Removal Sequence	11.5-6a
50 11.5-2	Inventory of Design Annual Activity of Shipped Waste	11.5-7
11.5-3	Solid Radwaste Shipments Per Year	11.5-9

44

LIST OF FIGURES

		PAGE
11.2-1	Liquid Radwaste System Flow Diagram	11.2-27
11.2-2	IALL Collection and Neutralization Liquid Radioactive Waste	11.2-28
11.2-3	IALL Evaporation Liquid Radioactive Waste	11.2-29
11.2-4	IALL Demineralization and Discharge Liquid Radioactive Waste	11.2-30
11.2-5	LALL Collection and Neutralization Liquid Radioactive Waste	11.2-31
11.2-6	LALL Evaporation Liquid Radioactive Waste	11.2-32
50 11.2-7	LALL Demineralization and Discharge Liquid Radioactive Waste	11.2-33
11.3-1	Radioactive Gas Flow Paths	11.3-40
11.3-2	Schematic Diagram of the Recycle Argon Circuit	11.3-41
50 11.3-3	Schematic Diagram of CAPS Process Flow	11.3-42
11.3-4	Flow Diagram - RAPS	11.3-43
11.3-5	Flow Diagram - RAPS	11.3-44
11.3-6	Flow Diagram - CAPS	11.3-45
11.3-7	Flow Diagram - CAPS	11.3-46
11.3-8	RCB Nitrogen Sampling and Analysis	11.3-47
11.3-9	CRBRP Design Radiological Release Points to Atmosphere	11.3-48
11.3-10	P&I Diagram Radioactive Argon Processing System	11.3-49
11.3-11	P&I Diagram Radioactive Argon Processing System	11.3-50
11.3-12	P&I Diagram Cell Atmosphere Processing System	11.3-51
11.3-13	P&I Diagram Cell Atmosphere Processing System	11.3-52
11.5-1	Solid Radwaste System Flow Diagram	11.5-10

CHAPTER 11.0 - RADIOACTIVE WASTE MANAGEMENT

LIST OF REFERENCES

SECTION NO.	PAGE NO.
11.1	11.1-11
11.2	11.2-11
50 11.3	11.3-18c
11.5	11.5-5
11.6	11.6-7

CHAPTER 11.0 RADIOACTIVE WASTE MANAGEMENT

The purpose of the information provided in this section is to provide assurance that the CRBRP has sufficient installed capacity and treatment equipment in the radwaste systems which will result in radioactivity levels which will not exceed the appropriate limits for the plant
49 personnel and general public and are as low as is reasonably achievable. Section 11.1 provides an assessment of source terms which serve as input into the various radioactive waste systems. Sections 11.2, 11.3, and 11.5 provide descriptions and objectives of the liquid, gaseous and solid radwaste systems respectively. Section 11.4 provides a description of the process and effluent radiological monitoring systems and Section 11.6 describes the offsite radiological monitoring program.

11.1 SOURCE TERMS

11.1.1 Modes of Radioactive Waste Production

This section describes the principal modes of radioactive isotope production in, and/or release to the primary coolant and reactor cover gas. The resulting radioactive concentrations in the primary coolant and cover gas are quantified. These isotopic concentrations form the predominant sources of radioactivity which the radioactive waste management systems are designed to control.

The radioactivity concentrations in the primary coolant and cover gas are produced from the following basic sources:

1. Neutron activation of:

   (a) sodium primary coolant and its trace impurities,
   (b) argon cover gas,
   (c) metallic reactor components and subsequent release to the primary coolant through wear and corrosion processes,

2. Production of fission products in the reactor core and blanket assembly fuel rods and partial release to the primary coolant through fuel rod cladding failures,

49 3. Plutonium and other actinide isotopes inventory and production in core and blanket assembly fuel rods during operation and release through fuel rod cladding failures,

4. The production (in order of importance) of tritium by the following neutron interactions:

   49 (a) The interaction of neutrons with Boron in the control assemblies,

Amend. 49
April 1979

(b) H^3 from ternary fission in the fuel

(c) Interaction of neutrons with Lithium (Li) contaminant in the sodium

11.1.2 Activation Product Source Strength Models

A general method of analysis was employed to determine activation rates for the primary sodium, the trace impurities in the sodium, and the various constituents of other non-fuel core components. This method was as follows:

1. Twenty-six group neutron fluxes were obtained throughout the volume within the reactor vessel from a two dimensional r, z diffusion calculation using the DOP III W computer program.

2. Target atom (the isotopes being irradiated) activation rates were then calculated using the TRIED computer code. TRIED calculates the activities based on the 26 group neutron fluxes calculated using DOP III W, the corresponding 26 group activation cross sections from the ABBN cross section library and the number density of the target atoms in the material. The calculations are performed for portions (zones) of the reactor volume with common material characteristics.

A synopsis of the computer codes used is given in Appendix A.

Activation of the sodium and its trace impurities results in radioactivity which is inherent to the primary coolant or directly released to the cover gas. Reactions of this type are shown on Table 11.1-1, together with essential physical data. Direct activation of the Ar^{38} and Ar^{40} constituents of the cover gas produces a negligible quantity of Ar^{39} and less than 5% of the Ar^{41}. The remaining Ar^{39} and Ar^{41} is produced from potassium impurity activation.*

Other activation products are released from the fuel cladding and core structural members by corrosion. The principal activation reactions which occur in stainless steel (Type 316) structural members are shown on Table 11.1-2.

49

*Ar^{39} + Ar^{41} production was based on 1000 ppm potassium impurity, when, in fact, all reactor grade sodium procurement experience indicates typical K impurity levels less than or equal to 400 ppm.

Analysis of core structures activation and corrosion release is derived from a model containing 153 activation zones to approximate temperature and activation rate variation. The fuel assemblies were divided into seven radial zones, each containing 14 axial regions. The blanket assemblies were described in three (3) radial zones and 12 axial regions. Additional zones were used to describe the control assemblies, removable and fixed radial shield, core barrel and reactor vessel. The axial regions extended from a lower elevation of the inlet modules to the outlet nozzle elevations.

The saturation value of the radioactivity for each of the twelve reactions shown on Table 11.1-2 was calculated using a TRIED 42 group R-Z edit of DOT III W two dimensional neutron flux distributions. These neutron flux distributions and activation rates were developed from the use of evaluated nuclear data files (ENDF/B-III).

The nominal corrosion rates for each of the zones were calculated using corrosion rate expressions recommended for use in Reference 4. Two corrosion rate expressions are developed in Reference 4, one for flow rates above 10 feet/second and a second for flow rates below 10 feet/second. These expressions are:

$$R = (6.685 \times 10^7) \left[\exp \frac{-18120}{T_k}\right] (\phi)$$

for flow rates $\geq$10 feet/second, and

$$R = (\phi)\ (1.1704 \times 10^7 + 3.496 \times 10^6 V) \left[\exp \frac{-18120}{T_k}\right]$$

for flow rates 10 feet/second. The quantities in the above equations are defined as follows:

R = mils/year

ϕ = oxygen content of Na (ppm)

T_k = temperature (^oK)

V = velocity (feet/second)

The release of radioactive isotopes to the primary sodium from isothermal regions of the fuel assemblies, blanket assemblies, control assemblies, fixed and removable shield assemblies, core barrel, and reactor
49 vessel is as follows:

$$A_i = \frac{S_A}{3.7 \times 10^{10}} \left[\left(\frac{p_i}{\lambda i}\right) (R) \quad (1-e^{-\lambda t}) - (Pi)\ (R)\ (t)\ (e^{-\lambda i^{t}}) \right]$$

where: A_i = the activity of isotope i released to the primary sodium due to corrosion from a given component with a useful reactor life of T, (curies)

S_A = surface area of zone (cm^2)

P_i = equilibrium rate of production and decay of isotope i (dis/sec-cm^3)

R = corrosion rate (cm/sec)

λi = decay constant (sec^{-1})

t = time (sec)

The temperature profiles used to evaluate the corrosion release are based on "plant expected" operating conditions. Parameters associated with this evaluation are shown on Table 11.1-3. The corrosion release models discussed above were modified to account for the following factors:

1. The temperature variation of the fuel and blanket assemblies as a function of operating cycle were included in the model. Fuel assembly outlet temperatures decrease during their residence in the core while blanket assembly temperatures increase during their residence in the core.

2. The temperature variation of the fuel and blanket assemblies from inlet to outlet were considered as described in Table 11.1-3.

3. The radioactive isotope release from high heat flux regions (fuel regions) were increased by a factor of two. This factor accounts for increased corrosion rates experimentally observed in high heat flux areas (Reference 5).

4. The release of Mn^{54} and Cr^{51} are multiplied by an additional factor of two in all regions of the reactor. Mn^{54} and Cr^{51} are preferentially released from steel surfaces.

The oxygen concentration in sodium was set at two ppm. This oxygen level is considered to be a factor of three higher than the nominal oxygen operating levels.

The corrosion releases were estimated for each component based on the total number of cycles the component would be in the reactor. The total release was then estimated based on the following equation:

$$A_{T_i} = A_i \left(\frac{1-e^{-\lambda_i t_{30}}}{1-e^{-\lambda_i t}} \right)$$

where: A_{T_i} = the activity release for 30 years from a component
49 having a useful life of t.

11.1.3 Fission Product and Plutonium Release Models

During normal plant operation, it is assumed that fission products and fuel materials are released to the primary coolant as the result of fuel rod cladding defects. The model for release of fission
49 products assumes continuous operation of the reactor with defects in fuel rods generating 1% of the core power. For additional discussion of fuel failure and burnup experience, see Section 4.2.1.3.

Fission product isotopes are included in this evaluation on the basis of their having the following:

1. A cumulative yield fraction greater than 0.1 percent based on the fast fission data for Pu-239, as reported in Reference 1.

2. An isotopic release resulting in approximately 10 or more curies of activity at ten days after shutdown for one of the following sources:

   a. The cold trap,

   b. The reactor plant primary coolant system surfaces,

   c. The primary coolant.

   This corresponds to a lower limit deposition of 10 curies in the cold traps, 0.1 Ci/cm^2 on primary coolant system surfaces and 0.01 Ci/gm of primary sodium.

3. All noble gas fission products with half lives in excess of ten minutes.

The above criteria leads to fission product source terms which provide a conservative design basis for shielding, ventilation system, and waste processing system design. It should be noted that the 15 hour half life Na-24 activity source term is approximately 3 decades greater than the activity of other isotopes. Na-24 completely dominates operating

primary sodium sources. Therefore, non-gaseous isotopes with half lives shorter than, or comparable to, the Na-24 do not have design significance unless they are daughter products of longer half life parents. Daughter products of this type are retained in the model. No significant fission product activities have been deleted because of this criteria.

The released fission product inventory was calculated using the equation:

$$I = P \times K \times EF \times FF \times YLD(1-e^{-\lambda t})/3.7 \times 10^{10}$$

where,

I = released inventory in (Ci)

P = reactor power = 975 MW_T

K = fissions/sec-MW = 3.09×10^{16}

EF = escape fraction from a failed rod using the release fraction for the various escape classes (see Table 11.1-4)

YLD = isotope yield fraction

λ = decay constant (sec^{-1})

t = time (sec)

FF = fraction of failed fuel = 0.01

The fission product escape fractions shown on Table 11.1-4 were developed from a model similar to that used for the Phenix and FFTF. The fission products are grouped into five escape classes:

Class 1 - Noble gases (Kr, Xe) & Cs-136

Class 2 - Cs-134 and Cs-137

Class 3 - Iodines, Antimony, Tellurium

Class 4 - Strontium

Class 5 - All other fission products

The release of noble gases from failed fuel during actual operation will be a function of half life. The escape fraction model used accounts for only the decay during release from the oxide fuel and conservatively assumed no subsequent delay in transit through the fuel to the clad gap, the fission gas plenums, or the sodium mass.

The cesium release fraction assumed is 1.0 for both Cs-137 and Cs-134 because of the known high mobility of these isotopes. The noble gas release fraction equation was conservatively used to estimate the release of Cs-136 because of its relatively short half life (13 days). The high release factor for cesium isotopes is demonstrated by data in Reference 3 and Table 11.1-4A.

The halogen, antimony and tellurium isotopic releases were treated as one class and modeled after the release fraction equation used in Phenix for halogen isotopes. Other isotopes such as palladium behave in a similar fashion but have been neglected because of their relatively short half life and low yields. Antimony and tellurium were treated as the same class as halogens because of their similar release behavior as documented in Reference 2 and Table 11.1-4A.

11.1.4 Tritium Production Sources

The major source of tritium results from the B^{10} (n, 2α)H^3 reaction which occurs in the boron carbide used in the control assemblies. The H^3 production from this source is a function of rod insertion, and therefore, a function of life. One hundred percent release of tritium from the control rods is conservatively assumed. Other reactions with boron, the B^{11} (n, H^3) Be^9 and B^{10} (n, α) Li^7, were investigated and found to be significantly smaller contributors. The production of H^3 in the B_4C control rods as a function of rod position was calculated using a computer code CRSSA (Control Rod Steady State Analysis). The production rate of H^3 varies from 37 to 92 Ci/day depending on the reactivity control requirements. The average value during a fuel cycle from this source is approximately 62 Ci/day.

A second significant source of H^3 is ternary fission. This occurs when plutonium or uranium fission produces a third light-mass fission fragment as well as the normal fission products. Tritium yield rates from this source are 1.7×10^{-4} and 2.2×10^{-4} H^3 atoms per fission of plutonium and uranium respectively. The estimated H^3 production rate from this source is 22 Ci/day.

The third significant source of H^3 is from neutron interaction with the lithium contaminant in the primay coolant. Two reactions are present, Li^6 (n, α) H^3, and Li^7 (n, nα) H^3. The first of the reactions dominates this source. The estimated production rate for this source is 5 Ci/day.

The average production of tritium from all sources over one fuel cycle is approximately 89 Ci/day.

11.1.5 Summary of Design Basis for Deposition of Radioactivity in Primary Sodium on Reactor and Primary Heat Transfer Surfaces and Within Reactor Auxiliary Systems

Section 11.1.1 through 11.1.4 have discussed the modes of producing and releasing radioactive isotopes. This section describes the design basis for their distribution in the primary sodium, on reactor and primary heat transfer surfaces, in the primary cold traps, and within the reactor cover gas system.

The radioactive gases produced by the activation reactions shown in Table 11.1-1 together with the Kr and Xe fission products released from failed fuel form the major portion of activities to the cover gas. The production rate of radioactive isotopes discharged to the cover gas together with the maximum concentration in the cover gas is shown on Table 11.1-6.

The principal non-gaseous activation, fission product and plutonium radioactive isotope depositions are shown on Table 11.1-7 and Table 11.1-8. Table 11.1-7 shows the concentration of these isotopes in the primary sodium, while Table 11.1-8 shows the estimated isotopic surface deposits on the wetted surfaces in the reactor and primary heat transfer system.

Cesium, iodide and antimony isotopes are known to be highly soluble in liquid sodium. All three of these elements can be effectively cold trapped. The degree of cold trapping is dependent on a wide range of variables. The soluble long half life isotopes (Cs-137, Cs-134, and Sb-125) are effectively cold trapped as shown on Table 11.1-7. The soluble, short half-life isotopes, iodines, remain in solution because of the relatively small proportion of the plant volume processed through the cold traps prior to their decay.

The "best estimate" cold trap removal of Cs-137 is 91 percent while this estimate for Cs-134 is 60 percent. The fraction of Cs-137 and Cs-134 removed per cold trap pass is the same for both isotopes. The differences in cold trap efficiencies are due to their variation in half life (30 yrs and 2 yrs, respectively). The proportion of Cs-137 estimated in the coolant was increased to 20 percent to allow for processing uncertainty. Evaluation of cold trap performance for removing long half life isotopes as a function of hydride and oxide content of the primary system is continuing.

Tellurium, strontium and all other fission product isotopes are known to concentrate on reactor and primary heat transfer surfaces together with the activation products released from stainless steel. Therefore, 100 percent of these isotopes have been shown to be deposited on the wetted surfaces. In addition, 10 percent of the fission products released from these isotopes are included in both the cold traps and primary sodium sources. Additional details of the deposition estimates are shown on Table 11.1-7 and 12.1-7.

All other isotopes, except for strontium, were treated as a single class (5). The release of these isotopes is due to fission recoil and fuel erosion. Strontium is released at a slightly increased rate. It has been postulated that this is due to the mobile nature of its Kr and Rb parents and its relatively high solubility in sodium. The relative release factors of 0.001 and 0.005 for other fission products and strontium is based on the release data shown in Reference 2.

The constants used for escape classes 1 and 3 are the same as those established for the Phenix design. The key parameters which establish these constants; diameter of fuel rods, centerline fuel temperature and fraction of the fuel cross section undergoing grain growth, are similar for CRBRP and Phenix.

Cs-134 is largely an activation product daughter from Cs-133 and its release rate is estimated as a fraction of the Cs-137 release rate according to the equation:

$$R_{134} = R_{137} \left(\frac{\lambda 137}{\lambda 134} \right) (0.1)$$

where

R_{134} and R_{137} = the release rates of Cs-134 and Cs-137, respectively (atoms/sec)

λ_{134} and λ_{137} = the decay constants (sec^{-1})

The design basis limit for plutonium released to the primary coolant is 100 ppb (part per billion) over a 30 year plant lifetime. The quantities of plutonium and related actinides are based on the presence of 100ppb of plutonium being in the sodium after 30 years.

Using an escape rate coefficient of 9.71×10^{14} atoms/cm^2-sec, this limit corresponds to continuous operation for 30 years with approximately 43 fuel pins having defects in the fueled region in which plutonium is assumed to escape. This escape coefficient is based on data reported in Reference (2) and obtained from an irradiation test of a purposely defected (0.030 inch hole) fuel rod in a forced convection sodium GETR capsule.

The design parameters for the release of plutonium to the primary coolant are shown in Table 11.1-5.

The estimates of plutonium deposition within the primary sodium and on the wetted primary surfaces are based on a distribution coefficient K which was derived from data tabulated in Reference 2. The distribution coefficient is defined as follows:

$$K = \frac{\text{concentration per unit area}}{\text{concentration per unit volume}}$$

This coefficient has been determined to be K = 0.65 cm for plutonium.

The release of other actinides (Np, Am, CM) has been estimated based on the following formula:

$$A_i = \frac{N_i(1-e^{-\lambda_i t})R_{Pu}}{(N_{Pu})\ (3.7 \times 10^4)}$$

where: A_i = actinide isotope release for isotope i (μCi)

N_i = actinide isotope i in the equilibrium cycle reactor core assemblies (atoms)

λ_i = decay constant (sec^{-1})

R_{Pu} = release rate of Pu, associated with the building of 100 ppb of Pu over 30 years (atoms/second)

N_{Pu} = Pu isotope inventory in the reactor core (atoms)

The deposition of the actinides within the reactor system is
49 treated in the same manner as that of Pu.

Table 11.1-9 shows the radioisotope inventory in the primary cold traps after 15 years of operation. Ten percent of the corrosion and insoluble fission products are shown deposited on the traps. This is considered to be an upper limit for this type of activity. The cold trap efficiency for the plutonium isotopes is assumed to be 100 percent. The tritium inventory is based on 47 percent of the tritium release being removed by the primary cold traps. Approximately 51 percent of tritium release is removed by the intermediate cold traps.

Calculations show that about 98% of the tritium generated in the plant will be trapped, about 1.5% transferred to the steam in the steam generators, and the balance to decay and loss through sodium pipes. Variations in the distribution of tritium in the primary and intermediate heat transfer systems have been studied as part of the system design, using an analytical tritium transport model. The study shows that the reference cold trap designs for the PHTS and IHTS are sufficiently large that uncertainties in cold trap efficiency will have little effect on tritium distribution. 20

ANL is currently conducting tests on model cold traps under the LMFBR Base Technology Program. The simultaneous precipitation rates of sodium hydride (NaH) and sodium titride (NaT) relative to their concentrations in the sodium is part of the objectives of the test program. The tests are being conducted on traps packed with wire mesh with a specific surface area of 260 ft^2/ft^3 as planned in the design of the CRBRP cold traps. The specific surface is the significant wire mesh characteristic because it provides sites for the initiation, retention and growth of crystalline dendrites of NaH and NaT, which coprecipitate from the cooled sodium. The first test reports are expected about the end of this fiscal year (June 1976). Some preliminary data on efficiency for tritium removal by coprecipitation and isotopic exchange with hydrogen have been obtained verbally from test personnel. These results indicate that the efficiency for tritium removal by coprecipitation may be lower than for hydrogen. However, the tests also indicate that the lower efficiency for tritium is $\geq$70% for the design residence times of the sodium in the individual cold traps. The test data show tritium removal efficiency varying from a minimum of 37% at 2.2 minutes residence time and approaching 100% at 9.5 minutes. Thus, at the 7.2 minutes residence time for the PHTS cold traps, the minimum efficiency is 70% while the 12.5 minutes residence time of the IHTS cold traps would give practically 100% removal efficiency. The tests of tritium removal by isotopic exchange indicate that this process is relatively ineffective for tritium removal for the primary as well as the intermediate cold trap by coprecipitation is indicated to be $\leq$70% and since no credit has been taken for removal by isotopic exchange, the assumed values in the tritium transport model calculations (51% and 47%, in PSAR Section 11.1) are believed to be conservative.

Additional data resulting from the tests will be reviewed to establish that the cold trap efficiencies are indeed conservative. Should revised cold trap efficiency assumptions be necessary, the tritium transport calculations will be revised. 20

11.1.6 Leakage Rates

Liquid and gaseous radwaste and control are discussed and quantified in Sections 11.2, 11.3, and 12.2.

REFERENCES - SECTION 11.1

1. NEDO-12154, "Compilation of Fission Product Yields", Vallicitos Nuclear Center, dated January, 1972.

2. GEAP-13925, "Capsule B9D Irradiation and Post Irradiation Examination", dated December, 1972.

3. R. P. Colburn, "Removal of Fission Products from Sodium by Hydride Slagging", Trans. Am. Nuc. Soc. 15, p. 235 (June, 1972).

4. WARD-NA-3045-23, "Relationship for Corrosion of Type 316 Stainless Steel in Liquid Sodium", dated April, 1974.

5. Proceedings of the International Conference on Liquid Metal Technology in Energy Production, Seven Springs, Pa., 1976, "The Influence of LMFBR Fuel Pin Temperature Profiles on Corrosion Rates", S. A. Shiels, C. Bagnall, S. L. Schrock, S. J. Orbon. 49

TABLE 11.1-1

ACTIVATION PRODUCTS IN PRIMARY SODIUM COOLANT*

Activation Reaction	Material Weight (%) in Na	Density** (gm/cc)	Natural Abundance (%)	Atomic** Weight	Atom - Density (atoms/cm^3)
$Na^{23}(n,\gamma)Na^{24}$	99.9	0.817 to 0.852	100 (Na^{23})	22.997	(2.144 to 2.234) x 10^{22}
$Na^{23}(n,2n)Na^{22}$					
$Na^{23}(n,p)Ne^{23}$					
$K^{41}(n,p)Ar^{41}$	0.1%	~8.35 x 10^{-4}	6.91 (K^{41})	39.096	8.90 x 10^{17}
$K^{39}(n,p)Ar^{39}$			93.08 (K^{39})		1.20 x 10^{19}
$Li^{6}(n,H^{3})He^{4}$	0.002	4.18 x 10^{-6}	7.42 (Li^{6})	6.939	1.08 x 10^{17}

*Activation due to sodium and any coolant impurities.
**Based on natural abundances of isotopes.

TABLE 11.1-2

ACTIVATION PRODUCTS - CORE STRUCTURAL MATERIAL (STAINLESS STEEL-316)

	Activation Reaction	Nominal Material Weight-%	Nominal Density gm/cc	Natural Abundance (%)	(AW) Atomic Weight	Atom-Density $\left(\frac{\text{Atoms}}{\text{cm}^3}\right)$
49	$Cr^{50}(n,\gamma)Cr^{51}$	18.00 (Cr)	1.436 (Cr)	4.31 (Cr^{50})	52.0569 (Cr)	7.162×10^{20} (Cr^{50})
	$Fe^{54}(n,\alpha)\ Cr^{51}$	65.17(Fe)	5.201 (Fe)	5.82 (Fe^{54})	55.9121 (Fe)	3.261×10^{21} (Fe^{54})
49	$Fe^{54}(n,p)\ Mn^{54}$	65.17 (fe)	5.201 (Fe)	5.82 (Fe^{54})	55.9121 (Fe)	3.261×10^{21} (Fe^{54})
	$Mn^{55}(N,2n)Mn^{54}$	2.0 (Mn)	0.160 (Mn)	100.0 (M^{55})	54.9380 (Mn)	1.753×10^{21} (Mn^{55})
49	$Fe^{58}(n,\gamma)\ Fe^{59}$	65.17 (Fe)	5.201 (Fe)	0.33 (Fe^{58})	55.9121 (Fe)	1.849×10^{20} (Fe^{54})
	$Co^{59}\ (n,p)\ Fe^{59}$	0.05 (Co)	0.004 (Co)	100.0 (Co^{59})	59.0000 (Co)	4.08×10^{19} (Co^{59})
49	$Ni^{62}(n,\alpha)\ Fe^{59}$	14.00 (Ni)	1.117 (Ni)	3.66 (Ni^{62})	58.7947 (Ni)	4.186×10^{20}(Ni^{62})
	$Ni^{58}(n,p)\ Co^{58}$	14.00 (Ni)	1.117 (Ni)	67.88 (Ni^{58})	58.7947 (Ni)	7.769×10^{21} (Ni^{58})
49	$Co^{59}(n,2n)\ Co^{59}$	0.05 (Co)	0.004 (Co)	100.0 (Co^{59})	59.0000 (Co)	4.08×10^{19} (Co^{59})
	$Co^{59}(n,\gamma)\ Co^{60}$	0.05 (Co)	0.004 (Co)	100.0 (Co^{59})	59.0000 (Co)	4.08×10^{19} (Co^{59})
	$Ni^{60}(n,p)\ Co^{60}$	14.00 (Ni)	1.117 (Ni)	26.16 (Ni^{60})	58.7947 (Ni)	2.992×10^{21} (Ni^{60})
49	$Ta^{181}(n,\gamma)\ Ta^{182}$	0.02*(Ta)	0.0016 (Ta)	99.99 (Ta^{181})	181.0000 (Ta)	5.32×10^{19} (Ta^{181})

(ρ Stainless Steel - 316 = 7.98 gm/cc)

*The nominal tantalum-columbium material weight of 0.02 is assumed to be 100% tantalum - the more significant component.

Amend. 49
April 1979

TABLE 11.1-3

SUMMARY OF SIGNIFICANT INFORMATION
USED IN CRBRP CORROSION RELEASE ESTIMATES

I.	Plant Expected Thermal and Hydraulic Conditions	1. Nominal Plant Temperatures - Inlet 711°F Outlet 965°F
		2. Nominal Total Reactor - 44.044×10^6 lbm/hr Flow
II.	Fuel Assemblies	1. Average Initial Duct Outlet Temperature - 1036°F
		2. Average Duct Outlet Temperature After 2 Cycles - 980°F
		3. Inlet Temperature - 711°F
		4. Flow Rate >10 feet/second
		5. Residence Time - 2 reactor cycles
III.	Inner Blanket Assemblies	1. Average Initial Duct Outlet Temperature - 819°F
		2. Average Duct Outlet Temperature After 2 cycles - 989°F
		3. Inlet Temperature - 711°F
		4. Flow Rate - >10 feet/second
		5. Residence Time - 2 Reactor Cycles
IV.	Radial Blanket Assemblies	1. Average Initial Duet Outlet Temperature - 783°F
		2. Average Duct Outlet Temperature After 4 or 5 Cycles - 935°F
		3. Inlet Temperature - 711°F
		4. Flow Rate - Various, both less than and greater than, 10 ft./sec.
		5. Residence Time - 4 and 5 cycles

TABLE 11.1-4

FISSION PRODUCT ESCAPE FRACTIONS

Class	Element	Escape Fractions
1	Kr^{+}, Xe^{+}, Cs^{136}	$EF = \frac{1}{(1.5E5)\lambda}(1-e^{-(1.5E5)\lambda})$
2	$Cs^{134, 137}$	EF = 1.0
3	Sb, Te, I	$EF = \frac{0.2}{(1.5E6)\lambda}(1-e^{-(1.5E6)\lambda})$
4	Sr	EF = 0.005
5	All other Fission Products	EF = 0.001

*λ in (sec^{-1}) decay constant of ith isotope.
+Assumed to be released to cover gas.

$EX \equiv 1 \times 10^{X}$

TABLE 11.1-4A

COMPARISON OF ASSUMED ESCAPE FRACTION FROM FAILED FUEL RODS WITH MEASURED ESCAPE FRACTIONS IN B9D

Fission Product	Design Escape Fraction	Escape Fraction Observed in B9D Capsule (Reference 2)
Cs 137	1.0	0.27
Sb 125	0.20	0.046
Te 129m	0.168	0.013
I 131	0.1039	0.052
Sr 89	0.005	0.00045
Sr 90	0.005	0.0012
Y 91	0.001	0.00049
Zr 95	0.001	0.00021
Nb 95	0.001	0.00051
Ru 103	0.001	0.00013
Ru 106	0.001	0.00035
Ce 141	0.001	0.00025
Ce 144	0.001	0.00013
Pm 147	0.001	0.00077

TABLE 11.1-5

PARAMETERS ASSUMED FOR PLUTONIUM RELEASE TO PRIMARY COOLANT

Parameter	Data	
1. Equilibrium core (MOL)* Pu composition	Isotope	Weight Fraction
	Pu^{239}	.65
	Pu^{240}	.23
	Pu^{241}	.083
	Pu^{242}	.029
	Pu^{238}	.009
2. Total number of fuel rods	42966	
3. Failed fuel rods containing a postulated 0.03 in. dia. hole in the fuel zone	43	
4. Plutonium escape rate coefficient =	$9.71 \times 10^{14} \frac{\text{atoms}}{\text{cm}^2\text{-sec}}$	

*MOL = Middle of Life

Table 11.1-6

RADIOACTIVE ARGON COVER GAS ACTIVATION AND FISSION PRODUCTS RELEASE RATES AND RESULTING ISOTOPIC RELEASE RATE

Argon Cover Gas

Isotope	Release Rate to atoms/sec	Concentration in	Inventory in Fuel GAPS and Gas Plenum (Ci)
Xe-131m	7.16×10^{13}	0.883	1.94×10^{5}
-133m	4.54×10^{14}	28.5	1.23×10^{6}
-133	1.84×10^{16}	502	4.97×10^{7}
-135m	5.56×10^{13}	111	1.50×10^{6}
-135	6.82×10^{15}	2250	1.84×10^{7}
-138	8.94×10^{13}	180	2.42×10^{5}
Kr-83m	6.74×10^{13}	70.5	1.82×10^{5}
-85m	2.94×10^{14}	175	7.95×10^{5}
-85	4.28×10^{14}	0.016	1.19×10^{5}
-87	1.47×10^{14}	186	3.97×10^{5}
-88	4.00×10^{14}	325	1.04×10^{6}
Ar-39	6.81×10^{14}	0.789	
-41	2.13×10^{12}	2.25	
Ne-23	3.34×10^{16}	7.71×10^{4}	
H-3	8.13×10^{8}	2.62×10^{-4}	

SCC = Standard Cubic Centimeter (70°F, 1 atm).

TABLE 11.1-7

ACTIVATION, FISSION PRODUCT AND PLUTONIUM ISOTOPE CONCENTRATIONS IN THE PRIMARY SODIUM COOLANT DURING 30 YEAR PLANT LIFETIME - DESIGN VALUES

ISOTOPE	μCi/gm*, + of Sodium	Percentage** of Isotope Inventory in Sodium Coolant	Source for Isotope
Na^{24}	2.94×10^4	100	Na Activation
Na^{22}	3.49	100	Na Activation
Rb^{86}	2.00	95	Failed Fuel-Fission Product Release
Cs^{137}	84.2	20	Failed Fuel-Fission Product Release
Cs^{136}	17.4	95	Failed Fuel-Fission Product Release
Cs^{134}	10.7	40	Failed Fuel-Fission Product Release
Sb^{125}	0.483	10	Failed Fuel-Fission Product Release
I^{131}	49.7	95	Failed Fuel-Fission Product Release
Te^{132}	3.53	10	Failed Fuel-Fission Product Release
I^{132}	33.5	95	Failed Fuel-Fission Product Release
Te^{129m}	0.718	10	Failed Fuel-Fission Product Release
Te^{129}	0.718	10	Failed Fuel-Fission Product Release
Sr^{89}	0.110	10	Failed Fuel-Fission Product Release
Sr^{90}	0.068	10	Failed Fuel-Fission Product Release
Y^{90}	0.068	10	Failed Fuel-Fission Product Release
Y^{91}	0.0313	10	Failed Fuel-Fission Product Release

TABLE 11.1-7 (continued)

ACTIVATION, FISSION PRODUCT AND PLUTONIUM ISOTOPE CONCENTRATIONS IN THE PRIMARY SODIUM COOLANT DURING 30 YEAR PLANT LIFETIME - DESIGN VALUES

ISOTOPE	μCi/gm*, † of Sodium	Percentage** of Isotope Inventory in Sodium Coolant	Source for Isotope
Zr^{95}	0.0583	10	Failed Fuel-Fission Product Release
Nb^{95}	0.0583	10	Failed Fuel-Fission Product Release
Ru^{103}	0.0831	10	Failed Fuel-Fission Product Release
Ru^{106}	0.0575	10	Failed Fuel-Fission Product Release
Rh^{106}	0.0575	10	Failed Fuel-Fission Product Release
Sb^{127}	3.65	95	Failed Fuel-Fission Product Release
Te^{127m}	0.208	10	Failed Fuel-Fission Product Release
Te^{127}	0.248	10	Failed Fuel-Fission Product Release
Ba^{140}	0.0654	10	Failed Fuel-Fission Product Release
La^{140}	0.0654	10	Failed Fuel-Fission Product Release
Ce^{141}	0.0775	10	Failed Fuel-Fission Product Release
Ce^{144}	0.0459	10	Failed Fuel-Fission Product Release
Pr^{144}	0.0459	10	Failed Fuel-Fission Product Release
Ce^{143}	0.0549	10	Failed Fuel-Fission Product Release

* The above concentrations are based on a primary sodium mass of 6.4×10^8 grams.
† Zero decay time
** Percentage based on isotopic solubility in sodium, cold trap efficiency for isotope and tendency for plating out.

TABLE 11.1-7 (CONTINUED)

ISOTOPE	µCi/gm*, + of Sodium	Percentage** of Isotope Inventory in Sodium Coolant	Source for Isotope
Pr^{143}	0.0549	10	Failed Fuel-Fission Product Release
Nd^{147}	0.0257	10	Failed Fuel-Fission Product Release
Pm^{147}	0.0257	10	Failed Fuel-Fission Product Release
Pu^{238}	1.6×10^{-2}	95	Released Fuel
Pu^{239}	4.24×10^{-3}	95	Released Fuel
Pu^{240}	5.54×10^{-3}	95	Released Fuel
Pu^{241}	0.46	95	Released Fuel
Pu^{242}	1.18×10^{-5}	95	Released Fuel
Np^{238}	4.91×10^{-6}	95	Released Fuel Byproduct
Np^{239}	1.58×10^{-2}	95	Released Fuel Byproduct
Am^{241}	1.64×10^{-3}	95	Released Fuel Byproduct
Am^{242m}	6.46×10^{-5}	95	Released Fuel Byproduct
Am^{242}	7.39×10^{-5}	95	Released Fuel Byproduct
Am^{243}	2.64×10^{-5}	95	Released Fuel Byproduct
Cm^{242}	1.20×10^{-3}	95	Released Fuel Byproduct
Cm^{243}	1.59×10^{-5}	95	Released Fuel Byproduct
Cm^{244}	3.32×10^{-4}	95	Released Fuel Byproduct
H^{3}	2.34	-2	B and K Activation Ternary Fission

TABLE 11.1-8

SIGNIFICANT CORROSION, FISSION PRODUCT AND RELEASED FUEL ACTIVITIES ON WETTED SURFACES AT REACTOR SHUTDOWN

Fission Products	Surface* Activity	Corrosion Products	Surface Activity	Released Fuel	Surface Activity
Sr^{89}	7.35	Co^{60}	1.20	Pu^{238}	9.66×10^{-3}
Sr^{90}	4.6	Co^{58}	4.70	Pu^{239}	2.68×10^{-3}
Y^{90}	4.6	Mn^{54}	5.6	Pu^{240}	3.51×10^{-3}
Y^{91}	2.12	Fe^{59}	0.039	Pu^{241}	0.316
Zr^{95}	3.94	Cr^{51}	.97	Pu^{242}	7.71×10^{-6}
Nb^{95}	3.94	Ta^{182}	.25	Np^{238}	3.18×10^{-6}
Mo^{99}	4.82			Np^{239}	1.02×10^{-2}
Ru^{103}	5.61			Am^{241}	1.06×10^{-3}
Ru^{106}	3.88			Am^{242}	4.19×10^{-5}
Rh^{106}	3.88			Am^{242}	4.19×10^{-5}
Ag^{111}	0.32			Am^{243}	1.71×10^{-5}
Te^{127}	14.0			Cm^{242}	7.78×10^{-4}
Te^{127m}	14.0			Cm^{243}	1.03×10^{-5}
Te^{132}	238			Cm^{244}	2.15×10^{-4}
Te^{129m}	48.4				
Te^{129}	48.4				
Ba^{140}	4.42				
La^{140}	4.42				
Ce^{141}	5.23				
Ce^{143}	3.70				
Pr^{143}	3.70				

TABLE 11.1-8

SIGNIGICANT CORROSION, FISSION PRODUCE AND RELEASED FUEL ACTIVITIES ON WETTED SURFACES AT REACTOR SHUTDOWN

Fission Products	Surface* Activity $\mu ci/cm^2$	Corrosion Products	Surface Activity $\mu ci/cm^2$	Released Fuel	Surface Activity $\mu ci/cm^2$
Ce^{144}	3.10				
Pr^{144}	3.10				
Nd^{147}	1.74				
Pm^{147}	1.74				
Pm^{149}	1.14				
Eu^{155}	0.17				
49 Eu^{156}	0.13				

* Some isotopes shown in Table 11.1-7 are soluble in sodium and are not considered as surface sources. A residual film of sodium on a drained component will remain and act as a residual source for these isotopes. Analysis to calculate doses include a source due to a 1 mil sodium film on components prior to cleaning.

TABLE 11.1-9

RADIOISOTOPE INVENTORY IN PRIMARY COLD TRAPS AFTER

15 YEARS OPERATION

Activated Corrosion Products	Percentage Of Isotope Released In Cold Trap	Activity In Primary Cold Trap (Ci)	
		Shutdown	10 Days After Shutdown
Co^{60}	10	10.0	10.0
Co^{58}	10	44.7	40.6
Mn^{54}	50	307	300
Ta^{182}	10	2.4	2.3
Cr^{51}	10	9.2	7.2
Fe^{59}	10	0.37	0.32
Fission Products			
Rb^{86}	5	64	44.2
Sr^{89}	10	70	60
Sr^{90}	10	25.9	25.9
Y^{91}	10	20.1	17.8
Zr^{95}	10	37.3	33.5
Nb^{95}	10	37.3	33.5
Ru^{103}	10	53.2	44.6
Ru^{106}	10	38.0	37.2
Rh^{106}	10	38.0	37.2
Sb^{125}	90	2710	2680
Sb^{127}	5	123	20.5
Te^{127m}	5	133	125
Te^{127}	5	146	125
Te^{129m}	10	460	376

TABLE 11.1-9 (continued)

Fission Products	Percentage Of Isotope Released In Cold Trap	Activity In Primary Cold Trap (Ci) Shutdown	Activity In Primary Cold Trap (Ci) 10 Days After Shutdown
Te^{129}	10	460	376
I^{131}	5	1675	750
Te^{132}	5	1110	132
I^{132}	5	1110	132
Cs^{134}	60	10340	10340
Cs^{136}	5	583	342

TABLE 11.1-9 (CONTINUED)

Fission Products	Percentage Of Isotope Released In Cold Trap	Activity In Primary Cold Trap (Ci) Shutdown	10 Days After Shutdown
Cs^{137}	80	1.24×10^5	1.24×10^5
Ba^{140}	5	20.9	12.2
La^{140}	5	20.9	12.2
Ce^{141}	10	49.6	40.0
Ce^{144}	10	29.7	28.9
Pr^{143}	10	35.1	21.0
Pr^{144}	10	29.4	28.6
Pm^{147}	10	21.9	21.7
Released* Fuel			
Pu^{238}	100	5.85	5.85
Pu^{239}	100	1.46	1.46
Pu^{240}	100	1.88	1.88
Pu^{241}	100	218	218
Pu^{242}	100	0.004	0.004
Am^{241}	100	.525	.525
Am^{242m}	100	.021	.021
Am^{242}	100	.021	.021
Am^{243}	100	.0084	.0084
Cm^{242}	100	.768	.736
Cm^{243}	100	.0059	.0059
Cm^{244}	100	.136	.136
Np^{238}	5	.0002	.0000
Np^{239}	5	.506	.028

TABLE 11.1-9 (CONTINUED)

	Activity in Primary Cold Trap (Ci)	
	Shutdown	10 Days After Shutdown
Activated Sodium		
Na^{22}	3.5	3.5
Na^{24}	66,543	1.0
Tritum		
H^3	185,000	185,000
RADIOISOTOPE INVENTORY IN INTERMEDIATE COLD TRAPS AFTER 3.25 YEARS OPERATION**		
Tritum		
H^3	42,600	42,600

Estimates of uranium release to the primary sodium are based on the release of plutonium and applying a scaling factor based on U-235 and Pu data in Table 5.6 of Reference 2.

* See Page 11.1-25
**Intermediate Cold Trap Life 3.25 Years.

Table 11.1-9 (Continued)

The resulting uranium concentrations in the primary coolant for t = 30 years will be:

U-235	9.5×10^{-8} μCi/gm
U-238	5.6×10^{-8} μCi/gm

Comparison with the Pu values of PSAR Table 11.1-7 shows a 5 order of magnitude lower value for uranium than the longer lived Pu isotopes (239, 240, 242) and a seven order magnitude reduction relative to Pu-238 and Pu-241. Even allowing for the lower MPC's for Pu isotopes, the release of uranium in sodium in terms of curies is at least 3 orders of magnitude lower than the relative plutonium release.

Assuming 100% cold trapping of both Pu and U, and curie contents for t = 15 years, the preceding comparisons also apply to uranium curie content in the primary cold traps.

* Plutonium isotopes are the predominent radiological source associated with releases of fuel material from Fast Breeder Reactor fuel rods. Based on available data (Ref. 2), the distribution coefficients for uranium and plutonium in the reactor coolant indicate a higher release coefficient for plutonium than for uranium. However, even if it is conservatively assumed that the uranium and plutonium release coefficients are equal, the maximum calculated reactor coolant and cold trap uranium activities are several orders of magnitude lower than the corresponding plutonium activities as shown below. In addition, the permissible 10CFR20 concentrations for plutonium are lower than those for uranium, therefore, the overall consequences of accidents evolving fuel releases from cold traps are controlled by the plutonium releases.

Isotope	Reactor Coolant Activity	Cold Trip Activity
	uCi/gm	Ci
Pu-238	2.92×10^{-3}	5.85
Pu-239	7.05×10^{-4}	1.46
Pu-240	9.18×1^{-4}	1.88
Pu-241	1.34×10^{-1}	2.18×10^{2}
Pu-242	1.96×10^{-6}	4.0×10^{-3}
Total Pu	1.38×10^{-1}	2.27×10^{2}
U-235	5.29×10^{-8}	1.1×10^{-5}
U-238	1.19×10^{-6}	2.4×10^{-3}
Total U	1.24×10^{-6}	2.41×10^{-3}

11.2 LIQUID WASTE SYSTEM

11.2.1 Design Objectives

The Liquid Radwaste System is designed to process contaminated liquids from the Clinch River Breeder Reactor Plant prior to reuse or release into the environment. The design objectives are to purify and reuse waste liquids where possible and to minimize the total activity in liquid effluents and the total volume of concentrates that will require drumming. The basic approach is to process liquid radwaste so that virtually all of the radioactive material is contained in solid material, to load all solid radioactive material into containers that meet Department of Transportation regulations, and to transfer the containers to a licensed contractor for processing or disposal. The design objective is, under normal operating conditions, that the radioactivity released will be as low as is reasonably achievable and less than the limits set by 10CFR20.

Table 11.2-1 shows the estimated design annual inventory of radioactivity by nuclide which may be discharged after dilution into the Clinch River. The first column lists the isotopes, the second column gives the half-lives. The third column lists the design annual activities released from the monitoring tanks of the Low Activity Level Liquid (LALL) System. The fourth column lists the annual activities which may be released from the storage tank of the Intermediate Activity Level Liquid (IALL) System. The fifth column lists the sum of the discharged activities per isotope. The two systems are described in detail in the following Section 11.2.2. Activity in the LALL System comes from floor and equipment drains, laboratory drains, personnel decontamination shower drains, and maintenance shop drains. Listed activities in the IALL System come from fission products, plutonium, and corrosion products that have plated out or deposited on components washed in the Large Component Cleaning Vessel (LCCV) and the small component autoclave (SCA). Activity levels of the fission products are based on an assumption of 1.0% failed fuel, 30 year irradiation and 10 day decay time. Corrosion product activity is based on 30 year irradiation and 10 day decay. The activities listed in the column represent a reduction of 10^5 by decontamination procedures of all isotopes entering the liquid radwaste system except for iodine and tritium for which the decontamination factors are 10^4 and 1 respectively. A plutonium limit of 100 ppb in the primary sodium is assumed.

The estimates of the released radioactivity levels shown in Table 11.2-1 are conservative. The decontamination factors (DF) are conservatively estimated from operating experience of Light Water Reactors. Collection of activity in the LALL System is based conservatively on the assumption of a 850 gallons per day drainage containing 10^{-4} μCi/cc.

It should be noted that no planned release of activity from the IALL System is contemplated under normal operating procedures. It may also be noted that the activity associated with the IALL System accounts for the major fraction of the total activity listed in Table 11.2-1.

The decontaminated water in the IALL System will be recycled for use in washing components in the LCCV. Processed water in the LALL System monitor tanks will not be reused, since to reuse it would mean injecting radioactivity into the laboratories and showers used by plant personnel. In addition, reuse would require control of the water being supplied to many areas which is both complex and costly. Instead, the liquid radwaste, after monitoring to assure compliance with all appropriate Federal and State regulations, will be released into a diluting stream or used as makeup water for the IALL system.

11.2.2 System Description

Figure 11.2-1 shows the schematic for the liquid radwaste system. The system consists of two subsystems. The first is designed to process liquids with intermediate levels of radioactivity that are reused; the second is designed to process liquids with low levels of radioactivity that are diluted by water from personnel decontamination showers and other sources and then released into the common plant discharge header with the Cooling Tower Blowdown Stream (CTBS). The decontamination of liquid radwastes in both systems is carried out in the following sequence: the liquids are collected, neutralized if necessary, and then treated in batches to one or more cycles of filtration, evaporation, and demineralization. Normally, the stream in the LALL and IALL Systems are kept completely separate. However, the design provides the option of utilizing either evaporator as a backup for the other. The Radwaste System provides a gross decontamination factor (DF) of 10^5 except for iodine and tritium where the decontamination factors are 10^4 and 1 respectively. These DFs are based on operating data compiled in WASH-1258. The concentrated liquid radwaste is collected from the bottom of the evaporator and transferred to a solid radwaste system for solidification and disposal by burial off-site. The contaminated resins in the demineralizer and the contaminated filters are also transferred to the solid radwaste system for packaging and disposal.

Table 11.2-2 shows the design annual concentration of activities by isotope flowing into the LALL and IALL systems. The fission product activities are calculated on the basis of 1.0% failed fuel, 30 year irradiation, and 10

days decay. The concentrations in the LALL System (column 3) are based on an estimate of 10^{-4} μCi/cc. The concentrations and volumes are based upon extrapolation of typical experience from light water reactors. This combination would result in processing an equivalent value of 3.5 lbs. of primary sodium. The estimated volume of 3.1×10^5 gallons of water per year comes from personnel decontamination showers and other sources (floor drains, laboratory drains). The levels for the IALL System come from sodium removal from components in the LCCV and the SCA.

The cleaning process, described in Section 9.2.2, is briefly summarized as follows:

A component is removed and transferred to an inerted cleaning cell. Moist nitrogen is added to the cell and the sodium coating on the component is converted to sodium hydroxide. The component is immersed in water and after a suitable time the water is pumped to the Liquid Radwaste System. A small fraction of processed components will require acid etching following the moist nitrogen reaction. Decontamination of a Primary Heat Transport Pump is the principal anticipated use of the acid etch with a design frequency of six times in the plant life. The acid etch process is also followed by a rinse. Expected activity concentration levels in the LCCV outflow have been made by utilizing models which compute the fission and corrosion, tritium and transuranium specific activities in the sodium that is deposited on the exposed surfaces in the primary system. Expected concentrations have been estimated from the number of components to be cleaned, their surface areas, the quantity of sodium on each component and the volume of fluid used to clean each component.

Column 4 of Table 11.2-2 shows the average activities in the first water rinse of the cleaning process. The calculation is based on the removal of 100% of the average annual activity in the sodium and 10% of the average annual fission and corrosion products plated on the components in a total of 100,000 gallons of water per year. The last column shows the activity concentration in the acid etch solutions collected in the IALL System. This calculation is based on removal of the remaining 90% of the deposited activity in an acid etch batch volume of 16,000 gallons.

Figures 11.2-2 to 11.2-4 provide a piping and instrumentation diagram of the IALL System. Figures 11.2-5 to 11.2-7 provide a piping and instrumentation diagram of the LALL System.

Note that liquid radwaste can leave the system in only two ways: concentrated radwaste from the evaporators are transferred to the solid radwaste system for solidification and disposal: decontaminated liquids can be discharged into the common plant discharge header with the cooling tower blowdown stream at a single discharge point that is connected to the monitoring tanks of the LALL System. If a portion of the IALL System liquids is to be released, liquids will be diverted to the LALL System monitoring tanks for analysis before discharge. IALL System release will be an abnormal occurrence.

Table 11.2-3 shows the design annual stored inventory of radioactivity by nuclide. The first column lists the isotopes, the second column gives the half-lives. The third column lists the activities collected in the monitoring tanks of the LALL System. The fourth column lists the activities collected in the storage tanks of the IALL System. One cycle of evaporation and demineralization has been assumed.

The processed IALL liquid is reused after decontamination. For this report the 40,000 gallon total stored inventory of Intermediate System Liquid Radwaste is conservatively assumed to contain 16,000 gallons of acid etch solution and 24,000 gallons of sodium cleaning solution.

Table 11.2-4 shows the concentrations of radioactivity by isotope at the discharge point shown on Figure 2.1-5. (See footnotes at end of Table for assumptions.)

11.2.3 System Design

Table 11.2-5 lists the components in the liquid radwaste system. The types of components are similar to those normally used in light water reactor plants. The capacity or flow rate, the size, weight, design code, and seismic classifications are shown for each item of equipment. All collection and storage tanks are designed for Quality Group D based on classifications in Section 3.2. The pipes are standard schedule. The seismic classification of the building is discussed in Section 3.A.4 - Reactor Service Building. Design inventories for shielding are the same as those reported in Section 11.2.2.

Table 11.2-5A lists those tanks located in the radwaste area which contain potentially radioactive materials, and provisions for monitoring tank liquid levels, for annunciating potential overflow conditions, and for collecting and processing liquids in the event of an overflow.

Process instrumentation and radiation instrumentation are shown in each diagram. Standard symbols are used to designate sensors for flow, pressure, temperature, liquid level, radiation level, and pH. The diagrams utilize the symbology of reference 1. Discharge from the LALL monitoring tanks is monitored by a radiation detector that will automatically stop the discharge when a preset radiation level is exceeded.

Radiation level of the discharge is continuously displayed to the operator in the control area. High radiation will initiate an alarm and terminate the discharge. A holdup volume is provided between the radiation monitor and the isolation valves to ensure that fluid initiating the alarm will not be discharged. Discharge from the monitoring tanks flows through two (2) key operated fail closed valves which provide double valve protection. An interlock is provided to ensure that a flow rate of at least a 1000 gpm is present in the blowdown path in order to permit discharge.

The liquid radwaste system is designed to maintain safe operating conditions by minimizing radiation hazards to plant personnel. Equipment will be selected, arranged, and shielded to permit operation, inspection, and maintenance with minimal exposure to personnel; the radiation levels will be within the limits set by 10CFR20. Pumps, valves, and instruments will be located in accessible areas. Tanks and processing equipment which may contain significant quantities of radioactivity will be appropriately shielded from personnel access areas and controls or equipment requiring regular maintenance. The activity levels in the various discharges and potential discharges as presented in Table 11.2-7 do not pose any hazard to operating personnel.

Section 15.7.2.5 has analyzed an assumed intermediate system storage tank failure, an occurrence involving the largest inventory of radioactivity in the liquid waste system. The resulting doses at the site boundary are decades below 10CFR20 limits.

11.2.4 Operating Procedures and Performance Tests

Operating procedures which will be used for the liquid radwaste system are analogous to those currently being used in light water reactor plants. The basic unit operations used in this system are evaporation and ion-exchange. These operations coupled with the ancillary collection, storage and fluid transport equipment make up the unit process for separation of activity from the liquid wastes. Detailed procedures are part of the light water reactor technology and can be found in reference safety analysis reports for standardized light water reactor plants and in plant procedures for operating reactors.

11.2.4.1 Operating Procedures

Before there is any release of liquid radwastes from the LALL monitoring tanks into the discharge line, a sample will be removed and analyzed in the laboratory. Sampling and analysis procedures will be consistent with the reporting required by Reg. Guide 1.21. On the basis of the signed laboratory report and a standard operating procedure, the operator will manually set a discharge flow rate. His supervisor will check the laboratory report and verify the discharge flow rate setting. The key operated discharge valves will then be unlocked by the operator. A flow rate meter and radiation detector will monitor the flow rate and radiation levels of the discharge stream. When the radiation levels exceed a preset level, the radiation detection system will automatically stop the discharge.

The standard operating procedure manual will provide instructions for the operator on setting the discharge flow rate on the basis of the laboratory analysis of the liquid in the monitoring tank. The instructions will be based on the known flow rate of the diluting stream and on the design criterion that the discharge of radioactivity into the environment will be as low as reasonably achievable.

11.2.4.2 Performance Tests

Tests by the equipment suppliers prior to shipment as well as tests at the time of installation to check out structural and performance requirements will be performed on each component and subsystem before acceptance. Standard operating procedures will include routine performance tests. The procedures will serve to assure that releases will be below the required limits.

The decontamination factors (DF) will be periodically checked on the basis of the routine in-line monitoring of radioactivity levels throughout the system coupled with supporting radiochemistry laboratory analysis for contributing nuclides. DF assumptions used in all calculations are from AEC WASH-1258. Reference (6).

11.2.5 Estimated Releases

Table 11.2-6 shows the estimated activity inventory due to the liquid radwaste. Column (1) lists the isotopes; column (2) is the half-life; column (3) is the amount each year solidified for disposal; column (4) is the amount released in the common plant discharge header; and column (5) shows the amount stored in the IALL System. Under design operating conditions, the amount of radioactivity listed in column (4) of Table 11.2-6 will be released to the environment at concentrations shown in Table 11.2-4. The released concentrations and quantities are in accordance with the design objective of releasing activities as low as reasonably achievable and well below the requirements of Federal, and State Regulations.

11.2.6 Release Points

11.2.6.1 Nuclear Island

The release location for the liquid radwaste is provided on the site location drawing, Figure 2.1-5. The release station is identified in the process and instrumentation diagram and in the flow diagram, Figure 11.2-7.

There is another route by which the liquid radwaste can be removed from the plant and that is by transfer to the solid radwaste system for solidification and disposal. The transfer point is also indicated in Figures 11.2-3 and 11.2-6.

11.2.6.2 Balance of Plant

Descriptions, design bases and evaluation of the Balance of Plant (BOP) are provided in Section 10. Under normal conditions, no radioactive releases other than tritium will be associated with BOP releases. The tritium is present due to diffusion from the secondary sodium loop. Pressures on the water/steam side of the steam-generator will be greater than those on the sodium side and prevent leakages into the water side.

Tritium which enters the main steam in the steam generator becomes chemically bonded to form tritiated water vapor. The steam is condensed and the water contains tritium. Any outflow from the steam water system contains tritiated water which cannot be separated from the non-tritiated water. A radioactivity input (100% Reactor Power) to the steam-water system of 0.016 Curies/Day is expected. Balance of Plant release assessments are based on a plant capacity factor of 0.68. 49

CRBRP operation will utilize discharge into the cooling tower blowdown from the steam water cycle via the waste water treatment system to maintain equilibrium tritium concentrations in the steam/feedwater cycle. Waste water treatment plant discharges include all steam cycle equipment drains, overflow from the mechanical vacuum pump reservoir as well as secondary plant sampling blowdown of approximately 5 GPM. The discharge from the steam-water cycle based on end of plant life conditions will result in a design curie release rate of 8.45×10^{-3} Ci per day into the cooling tower blowdown. Discharge point to the Clinch River is the same location identified for liquid radwaste system releases. 49 45 28

This tritium source has been included in the calculation of estimated doses and the results presented in Section 11.2.8.

Condenser cooling tower blowdown will be monitored and sampled to assure release of radioactivity to the environment is in accordance with Federal and State regulations.

11.2.7 Dilution Factors

The dilution factor in discharging the liquid radwaste and BOP tritium is associated with release into the cooling tower blowdown. A flow of 3.0×10^{12} cc per year (3.2×10^{6} gallons per day) has been used on the basis of the cooling tower design in calculating the final concentration of the released radioactivity. 5 33 37 30

Section 11.2.2 has previously described internal dilution processes including the component cleaning process (ILS) and plant drain water sources (LLS).

The concentration of radioactivity in the evaporator and demineralizers has been discussed in Section 11.2.2. The decontamination factor of 10^{5} for the radwaste system is a conservative estimate - based on operating experience listed in AEC Docket RM-50-2. 30

11.2.8 Estimated Doses

Performance of the liquid waste processing system and compliance with license limits will be established by plant operators utilizing monitoring equipment which measure radioactive liquid concentrations. Consistent with the means provided for demonstrating operations within licensed limits, Table 11.2-7 presents the fraction of the 10CFR20 MPC limits (on an isotopic basis) for release of radioactivity in liquid effluents to unrestricted areas. The discharge concentrations listed in Table 11.2-7 were established using the plant design parameters and assumptions discussed in Section 11.2.2 and 11.2.7. Total concentration as presented in Table 11.2-7 is well within 10CFR20 limits.

The pathways whereby the public will be exposed to the radioactivity released to the Clinch River are determined by the various public uses made of the river water. In Section 2.1.4.2 the public water supplies and industrial water supplies that could possibly be impacted by CRBRP operation were discussed. As discussed in Section 2.4.1.3, the area of the Clinch River encompassing the point of the CRBRP liquid discharge acts as a groundwater sink. Therefore, exposure to liquid contaminants through seepage into aquifers used as sources of drinking water is very unlikely.

Recreational uses of the Clinch River include fishing, boating, and swimming. Public exposure to radioactivity in the Clinch River during fishing and boating activities would generally be restricted to the small amounts of radiation escaping from a small area of the river surface. The closest swimming area is located approximately one mile upstream of the point of liquid effluent discharge. Uptake of radioactivity from a contaminated aquatic environment is also possible through increasing tropic levels beginning with phytoplankton (such as algae) which in turn are assimilated by zooplankton, small fish and larger fish.

Since there is no usage of the Clinch River water for irrigation of crops, the only pathway for radiation exposure of the public through the aquatic food chain is the consumption of fish caught by fishermen. No other biota is considered edible in this area. The Corbicula clam, used for human consumption in some parts of the world, can be found in the Clinch River. However, it is used primarily as bait and is not generally part of the local diet (Ref. 2). No quantitative data is currently available on the amount of fish caught from this region by sport fishermen for human consumption (Ref. 3). Although Watts Bar Reservoir produced a commercial fish harvest of 95,000 lbs. in 1973, catches within a 10 mile radius of the site amounted to only 1% of this total (Ref. 4).

Doses are calculated for those liquid exposure pathways that may possibly exist. These include external doses received while swimming, boating and fishing and internal doses from ingestion of fish and potable water.

11.2.8.1 Doses from Exposures to Liquid Effluents

Doses received from exposure to the liquid effluents released from the CRBRP were calculated using release rates provided in Table 11.2-4 (including BOP tritium) and equations 1 to 10 found in the Appendix to Section 11.2. Conservative flow conditions of the Clinch River (typical summer flow) were assumed to exist for 11 months of the year. In addition, an extended period (30 days) of zero flow was assumed to occur during the year. Such an extended period of zero flow as discussed in Section 2.4.11 has occurred in the past but is not expected to occur in the future.

41 As discussed in the revised plume analysis in the CRBRP Environmental Report (section 14.6), an assumed dilution factor of 1.0 in the immediate area of the CRBRP discharge will provide an uppermost estimate of impact. Such a conservative assumption has been utilized in the calculation of individual external doses associated with CRBRP liquid effluents. 8

41 Assuming a dilution factor of 1.0 existing at the CRBRP discharge, the plume analysis results can be extrapolated to establish that assuming a dilution factor of 0.11 at the nearest intake point for the drinking of water downstream of the CRBRP discharge is a conservative estimate. Such a conservatism was assumed for the 30 day extended period. Dilution factors (DF) assumed for the remaining 11 month low flow condition 5.5×10^{-3} is the result of a conservative extrapolation of typical summer flows. This set of dilution factors has been utilized in the conservative assessment of individual doses due to ingestion of potable water. 30 8

41 Doses due to ingestion of aquatic food conservatively assumed a dilution factor of 1.0 associated with an extended (30 day) period of zero flow. A DF of 5.5×10^{-3} as discussed before, was assumed for the other 11 months of the year. 8 30

In the dose assessments, no credit is taken for removal of activity from the water through absorption on solids and sedimentation, by deposition in the biomass or by processing within water treatment systems. Dose rates via the various exposure pathways to liquid effluents are presented in Table 11.2-9.

41 Evaluation of dose via exposure to shoreline deposits (river sediment) assumes an exposure time of 500 hr. per year. Times of exposure for swimming (immersion) of 100 hrs/yr and above-water activities (boating and fishing) of 600 hr/yr were assumed. The exposures involved are conservatively postulated to occur during the assumed 30 day no flow period. Time between release of the isotope and exposure is assumed to be 0.5 days. Conservative total body gamma and total skin doses to an individual are calculated to be 2.0×10^{-5} and 2.6×10^{-5} mrem/yr, respectively. Such doses are less than one-millionth of natural background 41 30 8

radiation. A breakdown of the dose contribution from each pathway is presented in Table 11.2-9.

Population doses for exposure from immersion in water and from above-water activities were calculated assuming:

a. The maximum dilution factor (1.0) of the zero flow condition is assumed to exist for the area of the CRBR discharge.

b. 90 persons (Section 2.1 and Table 2.1-14 for the year 2010) are immersed for 100 hrs/year in the immediate area of the plant discharge.

c. 45 persons spend 600 hrs/yr in above-water activities (100 hrs/yr boating and 500 hrs/yr fishing etc.) in the immediate area of the plant discharge.

Total population dose from all aquatic activities is 1.1×10^{-6} man rem/yr.

Individual annual dose from ingestion of aquatic foods (50 g of fish per day) was evaluated using the bioaccumulation factors listed in Table 11.2A-4 of the Appendix 11.2A and are tabulated in Table 11.2-9. Essentially the entire whole body internal dose results from ingestion of tritium.

The population dose from aquatic foods based on a conservatively large annual catch of 9,500 pounds of fish within a 10 mile radius of the plant site is 4.1×10^{-3} man-rem/yr. It is assumed that fifty percent of the catch is edible and the equivalent of 1200 persons (5 g of fish per person per day) would be supplied by the harvest. An additional pathway to humans is the ingestion of small game such as a raccoon or duck which may have fed on fish from the Clinch River. In view of the low doses resulting from ingestion of aquatic foods, no significant exposure via this pathway can be expected.

Essentially the entire whole body dose due to ingestion results from tritium. The whole body dose is a factor of less than 3×10^{-4} of 10CFR20 annual dose limits for unrestricted areas.

Population dose associated with ingestion of drinking water is based on the impacting of the Clinch River water supplies as discussed in Section 2.1.4.2 (and Tables 2.1-19 and 20). The plume associated with the 30 day no flow condition is conservatively assumed to impact the water supply at the nearest downstream intake with a dilution factor of 0.11 In addition, the other downstream intakes for a distance of 20 miles are assumed to be impacted by a 12 month low flow condition of 4777 CFS river flow. The population dose calculation accounts for both the general

41 public and industrial workers (1100 cc intake per 8 hr day) at nearby industrial facilities. Associated population dose is 8.1×10^{-1} man-rem per year. Even allowing for water usage increases during plant lifetime, based on an average annual internal dose due to natural radiation of 18 mrem per individual (Ref. 5), the internal dose due to ingestion of water is a factor of less than 10^{-4} of that which the population would be receiving due to natural sources of radiation.

REFERENCES - SECTION 11.2

1. Clinch River Breeder Reactor Plant Nuclear Island, Standard Symbology for CRBRP Drawings, WARD-D-0036, Rev. 0, April, 1974.

2. Telecon, Colick J., Westinghouse Environmental Systems Dept. to Hatcher R. M., Tennessee Game and Fish Commission, Nashville, Tennessee, June 15, 1974.

3. Letter, Sewell, William, Tennessee Game and Fish Commission, Knoxville, Tennessee, to Colick J., Westinghouse Environmental Systems Dept., March 13, 1974.

4. Letter, Allen, Elmer C., Fishery Reporting Specialist, National Fisheries Service to Colick, J., Westinghouse Environmental Systems Dept., March 1, 1974.

5. Effects on Population of Exposure to Low Levels of Ionizing Radiation, Report of the Advisory Committee in the Biological Effects of Ionizing Radiations, National Academy of Sciences, National Research Council, Washington, D.C. 20006, November, 1972. p. 12.

6. WASH-1258, Proposed Rule Making Action: Numerical Guides for Design Objectives and Limiting Conditions for Operation to meet the Criterion "As Low as Practicable for Radioactive Material in Light Water Cooled Nuclear Power Reactors Effluents", July, 1973. 49

TABLE 11.2-1

DESIGN ANNUAL RELEASED ACTIVITY INVENTORY(1)

Isotope(4)	Half-life(5)	Low Level(2) Activity (Ci)	Intermediate(3) Level Activity (Ci)	Total Activity (Ci)
H-3(6)	12.3Y	2.86(-3)*	4.28(-2)	4.56(-2)
Na-22	2.6Y	5.34(-8)	6.24(-7)	6.78(-7)
Na-24	15H	6.65(-9)	7.76(-8)	8.42(-8)
Cr-51	28D	-	8.70(-7)	8.70(-7)
Mn-54	312D	-	6.27(-6)	6.27(-6)
Co-58	71D	-	5.34(-5)	5.34(-5)
Co-60	5.2Y	-	1.50(-5)	1.50(-5)
Fe-59	45D	-	3.91(-7)	3.91(-7)
Sr-89	51D	1.48(-9)	6.58(-7)	6.60(-7)
Sr-90	28.8Y	1.04(-9)	4.73(-7)	4.74(-7)
Y-90	64.1H	1.04(-9)	4.73(-7)	4.74(-7)
Y-91	58D	1.47(-9)	1.93(-7)	1.95(-7)
Nb-95	35D	2.28(-9)	3.92(-5)	3.92(-5)
Zr-95	64D	2.28(-9)	3.92(-5)	3.92(-5)
Mo-99	67D	-	4.01(-8)	4.01(-8)
Ru-103	40D	3.36(-9)	5.20(-5)	5.20(-5)
Ru-106	1Y	4.23(-9)	4.21(-5)	4.21(-5)
Rh-106	2.2H	4.23(-9)	4.21(-5)	4.21(-5)
Ag-111	7.5D	-	1.30(-8)	1.30(-8)
Sb-125	2.7Y	7.40(-9)	8.63(-8)	9.37(-8)
Te-127m	109D	3.00(-9)	1.35(-6)	1.35(-6)
Te-127	9.35H	3.00(-9)	1.35(-6)	1.35(-6)
Te-129m	34D	1.20(-8)	4.05(-6)	4.06(-6)
Te-129	70M	1.20(-8)	4.05(-6)	4.06(-6)
Te-132	78H	6.41(-9)	2.91(-6)	2.92(-6)
I-131	8.1D	3.23(-6)	1.28(-5)	1.60(-5)
I-132	2.3H	6.09(-7)	7.12(-6)	7.73(-6)
Cs-134	2.1D	1.63(-7)	2.28(-6)	2.44(-6)
Cs-136	13D	1.96(-7)	2.26(-6)	2.46(-6)
Cs-137	30Y	1.30(-6)	1.80(-5)	1.93(-5)
Ba-140	12.8D	5.86(-10)	2.84(-5)	2.84(-5)
La-140	40H	5.86(-10)	2.84(-5)	2.84(-5)
Ce-141	32.5D	1.55(-9)	4.35(-7)	4.37(-7)
Ce-143	33.7D	5.08(-10)	7.61(-7)	7.61(-7)
Pr-143	13.7D	5.08(-10)	7.61(-7)	7.61(-7)
Ce-144	285D	6.90(-10)	3.11(-7)	3.11(-7)
Pr-144	17M	6.90(-10)	3.11(-7)	3.11(-7)
Nd-147	11.1D	2.97(-10)	9.58(-8)	9.60(-8)
Pm-147	2.7D	3.93(-10)	9.31(-8)	9.35(-8)
Eu-155	1.8Y	-	1.70(-8)	1.70(-8)
Ta-182	115D	-	2.54(-6)	2.54(-6)
Pu-238	86Y	2.46(-10)	3.86(-9)	4.11(-9)
Pu-239	2.0(4)Y	6.54(-11)	1.03(-9)	1.09(-9)
Pu-240	6.7(3)Y	8.54(-11)	1.34(-9)	1.42(-9)
Pu-241	13Y	7.08(-9)	1.14(-7)	1.21(-7)
Pu-242	3.8(5)Y	1.81(-13)	2.89(-12)	3.07(-12)

TABLE 11.2-1 (Continued)

Isotope	Half-life(5)	Low Level(2) Activity (Ci)	Intermediate(3) Level Activity (Ci)	Total Activity (Ci)
Np238	2D	2.77(-15)	4.23(-14)	4.51(-14)
Np239	2.4D	1.27(-11)	2.05(-10)	2.17(-10)
Am-241	433Y	2.52(-11)	4.01(-10)	4.26(-10)
Am-242m	152Y	9.95(-13)	1.58(-11)	1.68(-11)
Am-242	16H	9.95(-13)	1.58(-11)	1.68(-11)
Am-243	7.4(3)Y	4.07(-13)	1.85(-11)	1.89(-11)
Cm-242	163D	1.77(-11)	2.84(-10)	3.02(-10)
Cm-243	30Y	2.45(-15)	3.89(-12)	3.89(-12)
Cm-244	18Y	5.12(-12)	8.14(-11)	8.65(-11)

---

(1) 1.0% failed fuel for fission products and 100ppb Pu in the primary sodium. 30 year irradiations and 10 day decay for fission and activated corrosion products.

(2) Total discharge of $\sim 10^{-4}$ μCi/cc at 850 gallons per day.

(3) 10% of the annual stored inventory is released.

(4) All released activity has been decontaminated by a factor of 10^5 except for iodine (DF=10^4) and tritium (DF=1).

(5) Y=years, D=days, H=hours, M=minutes.

(6) The tritium values do not include Balance of Plant tritium release of 8.45×10^{-3} Ci/day. See Section 11.2.6.2.

* 2.86(-3) = 2.86×10^{-3}

TABLE 11.2-2

DESIGN ANNUAL CONCENTRATION OF LOW AND INTERMEDIATE ACTIVITY LEVEL INPUT STREAMS (uCi/cc)(1)

Isotope	Half-Life	Low Level(2)	Intermediate Sodium Cleaning Solution(3)	Intermediate Acid Etch(4)
H-3	12.3Y	2.44(-6)	1.13(-3)	-
Na-22	2.6Y	4.55(-6)	1.65(-3)	-
Na-24	15H	5.67(-7)	2.05(-4)	-
Cr-51	28D	-	2.01(-4)	1.31(-2)
Mn-54	312D	-	1.45(-3)	9.45(-2)
Co-58	71D	-	1.13(-3)	8.75(-1)
Co-60	5.2Y	-	3.17(-4)	2.45(-1)
Fe-59	45D	-	8.72(-6)	6.40(-3)
Sr-89	51D	1.26(-7)	1.74(-3)	-
Sr-90	28.8Y	8.93(-8)	1.25(-3)	-
Y-90	64.1H	8.93(-8)	1.25(-3)	-
Y-91	58D	3.65(-8)	5.11(-4)	-
Nb-95	35D	6.88(-8)	8.78(-4)	6.42(-1)
Zr-95	35D	6.88(-8)	8.78(-4)	6.42(-1)
Mo-99	67D	-	1.06(-4)	-
Ru-103	40D	9.17(-8)	1.29(-3)	8.50(-1)
Ru-106	1Y	7.41(-8)	1.06(-3)	6.88(-1)
Rh-106	2.2H	7.41(-8)	1.06(-3)	6.88(-1)
Ag-111	7.5D	-	3.43(-5)	-
Sb-125	2.7Y	6.31(-7)	2.28(-4)	-
Te-127m	109D	2.56(-7)	3.56(-3)	-
Te-127	9.35H	2.56(-7)	3.56(-3)	-
Te-129m	34D	7.70(-7)	1.07(-2)	-
Te-129	70M	7.70(-7)	1.07(-2)	-
Te-132	78H	5.46(-7)	7.70(-3)	-
I-131	8.1D	2.75(-5)	9.99(-4)	1.49(-2)
I-132	2.3H	5.19(-6)	1.88(-3)	-
Cs-134	21Y	1.39(-5)	5.04(-3)	6.10(-3)
Cs-136	13D	1.38(-5)	4.99(-3)	6.20(-3)
Cs-137	30Y	1.11(-4)	4.00(-2)	4.76(-2)
Ba-140	12.8D	4.99(-8)	6.97(-4)	4.64(-1)
La-140	40H	4.99(-8)	6.97(-4)	4.64(-1)
Ce-141	32.5D	8.22(-8)	1.15(-3)	-
Ce-143	33.7D	4.33(-8)	2.01(-3)	-
Pr-143	13.7D	4.33(-8)	2.01(-3)	-
Ce-144	285D	5.88(-8)	8.22(-4)	-
Pr-144	17M	5.88(-8)	8.22(-4)	-
Nd-147	11.1D	1.81(-8)	2.53(-4)	-
Pm-147	2.7D	3.35(-8)	2.46(-4)	-
Eu-155	1.8Y	-	4.49(-5)	-
Ta-182	115D	-	6.08(-5)	4.15(-2)
Pu-238	86Y	2.10(-8)	1.02(-5)	-
Pu-239	2.0(4)Y	5.57(-9)	2.73(-6)	-

TABLE 11.2-2 (Continued)

Isotope	Half-Life	Low Level(2)	Intermediate Sodium Cleaning Solution(3)	Intermediate Acid Etch(4)
Pu-240	6.7(3)Y	7.28(-9)	3.55(-6)	-
Pu-241	13Y	6.03(-7)	3.01(-4)	-
Pu-242	3.8(5)Y	1.55(-11)	7.65(-9)	-
Np-238	2D	2.36(-13)	1.12(-10)	-
Np-239	2.4D	1.08(-9)	5.41(-7)	-
Am-241	433Y	2.15(-9)	1.06(-6)	-
Am-242m	152Y	8.48(-11)	4.18(-8)	-
Am-242	16H	8.48(-11)	4.18(-8)	-
Am-243	7.4(3)Y	3.47(-11)	4.90(-8)	-
Cm-242	163D	1.51(-9)	7.52(-7)	-
Cm-243	30Y	2.09(-11)	1.03(-8)	-
Cm-244	18Y	4.36(-10)	2.15(-7)	-

---

(1) 1.0% failed fuel for fission products and 100ppb Pu in the primary sodium. 30 year irradiation and 10 days decay of fission and activated corrosion products. Decay times during collection, processing and holdups are neglected.

(2) Low activity concentrations are computed by assuming that the listed isotopes are present in 3.5 lbs of primary sodium per year diluted by 3.1×10^5 gallons of water per year.

(3) Intermediate activity concentrations for the sodium cleaning solution are computed assuming 10% of plated out activity and 100% of sodium activity adhering to the processed components is dissolved in 100,000 gallons of water per year. The solution is present in the input streams to the collection tanks.

(4) The average annual acid etch solution consists of the remaining 90% of the plated out activity from the processed components in an average annual volume of 3200 gallons. Cell sodium activity is assumed to have been removed in the first water rinse. This input is based upon six (6) acid etches during the plant life.

TABLE 11.2-3

DESIGN ACTIVITY INVENTORY STORED AFTER PROCESSING[1]

Isotope	Half-Life	Low Level Activity[2] Monitor Tank (CI)	Intermediate Activity[3] Storage Tank (CI)
H-3	12.3Y	2.31 (-5)	1.01 (-1)
Na-22	2.6Y	4.31 (-10)	1.50 (-6)
Na-24	15H	5.36 (-11)	1.86 (-7)
Cr-51	28D	-	8.16 (-6)
Mn-54	312D	-	5.85 (-5)
Co-58	71D	-	5.31 (-4)
Co-60	5.2Y	-	1.49 (-4)
Fe-59	45D	-	3.88 (-6)
Sr-89	51D	1.19 (-11)	1.58 (-6)
Sr-90	28.8Y	8.45 (-12)	1.14 (-6)
Y-90	64.1H	8.45 (-12)	1.14 (-6)
Y-91	58D	3.45 (-12)	4.64 (-7)
Nb-95	35D	6.51 (-12)	3.90 (-4)
Zr-95	64D	6.51 (-12)	3.90 (-4)
Mo-99	67D	-	9.63 (-8)
Ru-103	40D	8.68 (-12)	5.16 (-4)
Ru-106	1Y	7.01 (-12)	7.84 (-6)
Rh-106	2.2H	7.01 (-12)	7.84 (-6)
Ag-111	7.5D	-	3.12 (-8)
Sb-125	2.7Y	5.97 (-11)	2.07 (-7)
Te-127m	109D	2.42 (-11)	3.23 (-6)
Te-127	9.35D	2.42 (-11)	3.23 (-6)
Te-129m	34D	7.28 (-11)	9.72 (-6)
Te-129	70M	7.28 (-11)	9.72 (-6)
Te-132	78H	5.16 (-11)	6.99 (-6)
I-131	8.1D	2.60 (-8)	1.81 (-4)
I-132	2.3H	4.91 (-9)	1.71 (-5)
Cs-134	2.1D	1.26 (-10)	8.26 (-6)
Cs-136	13D	1.31 (-9)	8.29 (-6)
Cs-137	30Y	1.05 (-8)	3.25 (-4)
Ba-140	12.8D	4.72 (-12)	2.82 (-4)
La-140	40H	4.72 (-12)	2.82 (-4)

TABLE 11.2-3 (continued)

Isotope	Half-Life	Low Level Activity Monitor Tank(Ci)	Intermediate Activity Storage Tank (Ci)
Ce-141	32.5D	7.78(-12)	1.04(-6)
Ce-143	33.7D	4.09(-12)	1.83(-6)
Pr-143	13.7D	4.09(-12)	1.83(-6)
Ce-144	285D	5.56(-12)	7.47(-7)
Pr-144	17M	5.56(-12)	7.47(-7)
Nd-147	11.1D	1.71(-12)	2.30(-7)
Pm-147	2.7D	3.17(-12)	2.23(-7)
Eu-155	1.8Y	-	4.08(-8)
Ta-182	115D	-	2.52(-5)
Pu-238	86Y	2.01(-12)	9.26(-9)
Pu-239	2.0(4)Y	5.27(-13)	2.48(-9)
Pu-240	6.7(-3)Y	6.89(-13)	3.24(-9)
Pu-241	13Y	5.71(-11)	2.74(-7)
Pu-242	3.8(5)Y	6.89(-13)	6.96(-12)
Np-238	2D	2.23(-17)	1.01(-13)
Np-239	2.4D	1.03(-13)	4.92(-10)
Am-241	433Y	2.03(-13)	9.62(-10)
Am-247m	152Y	8.02(-15)	3.80(-11)
Am-242	16H	8.02(-15)	3.80(-11)
Am-243	7.4(3)Y	3.28(-15)	4.46(-11)
Cm-242	163D	1.43(-13)	6.84(-10)
Cm-243	30Y	1.98(-15)	9.44(-12)
Cm-244	18Y	4.13(-14)	1.96(-10)

---

(1) 1.0% failed fuel for fission products and 100ppb in the primary sodium. 30 year irradiation and 10 days decay of fission and activated corrosion products. Decay due to collection, processing and holdup are neglected.

(2) Low activity is based on Table 11.2-1 with a DF=10^5 for all isotopes except iodine (DF=10^4) and tritium (DF=1) 2400 gallon monitoring tank volume.

(3) Intermediate Activity is based on 40,000 gallon storage capacity containing the activity inventory in 16,000 gal. of acid etch solution and in 24,000 gal. of sodium cleaning solution. A decontamination factor of 10^5 is applied to all isotopes except iodine (DF=10^4) and tritium (DF=1).

TABLE 11.2-4

CONCENTRATION OF RADIONUCLIDES AT DISCHARGE
TO CLINCH RIVER DESIGN VALUES

Isotope	Half-Life	Low Activity (μCi/cc)(1)	Intermediate Activity (μCi/cc)(2)	Total Activity (μCi/cc) (3)
H-3[4]	12.3Y	9.53(-10)	3.26(-8)	3.36(-8)
Na-22	2.6Y	1.95(-14)	4.84(-14)	6.79(-14)
Na-24	15H	2.22(-15)	6.00(-14)	6.22(-14)
Cr-51	28D	-	2.63(-12)	2.63(-12)
Mn-54	312D	-	1.89(-11)	1.89(-11)
Co-58	71D	-	1.71(-10)	1.71(-10)
Co-60	5.2Y	-	4.81(-11)	4.81(-11)
Fe-59	45D	-	1.25(-12)	1.25(-12)
Sr-89	51D	4.93(-16)	5.10(-13)	5.10(-13)
Sr-90	28.8Y	3.47(-16)	3.68(-13)	3.68(-13)
Y-90	64.1H	3.47(-16)	3.68(-13)	3.68(-13)
Y-91	58D	4.90(-16)	1.50(-13)	1.50(-13)
Nb-95	35D	7.60(-16)	1.26(-10)	1.26(-10)
Zr-95	64D	7.60(-16)	1.26(-10)	1.26(-10)
Mo-99	67D	-	3.11(-14)	3.11(-14)
Ru-103	40D	1.12(-15)	1.66(-10)	1.66(-10)
Ru-106	1Y	1.41(-15)	2.53(-12)	2.53(-12)
Rh-106	2.2H	1.41(-15)	2.53(-12)	2.53(-12)
Ag-111	7.5D	-	1.01(-14)	1.01(-14)
Sb-125	2.7Y	2.47(-15)	6.71(-14)	6.96(-14)
Te-127m	109D	1.00(-15)	1.04(-12)	1.04(-12)
Te-127	9.35H	1.00(-15)	1.04(-12)	1.04(-12)
Te-129m	34D	4.00(-15)	3.14(-12)	3.14(-12)
Te-129	70M	4.00(-15)	3.14(-12)	3.14(-12)
Te-132	78H	2.14(-15)	2.25(-12)	2.25(-12)
I-131	8.1D	1.08(-12)	5.84(-11)	5.95(-11)
I-132	2.3H	2.03(-13)	5.52(-12)	5.72(-12)
Cs-134	2.1D	5.26(-14)	2.66(-12)	2.71(-12)
Cs-136	13D	6.53(-14)	2.67(-12)	2.73(-12)
Cs-137	30Y	4.33(-13)	1.05(-10)	1.05(-10)
Ba-140	12.8D	1.95(-16)	9.10(-11)	9.10(-11)
La-140	40H	1.95(-16)	9.10(-10)	9.10(-11)
Ce-141	32.5D	5.16(-16)	3.35(-13)	3.53(-13)
Ce-143	32.5D	1.69(-16)	5.90(-13)	5.90(-13)
Pr-143	13.7D	1.69(-16)	5.90(-13)	5.90(-13)
Ce-144	285D	2.30(-16)	2.41(-13)	2.41(-13)
Pr-144	17M	2.30(-16)	2.41(-13)	2.41(-13)
Nd-147	11.1D	9.90(-17)	7.42(-14)	7.42(-14)
Pm-147	2.7D	1.31(-16)	7.42(-14)	7.42(-14)
Eu-155	1.8Y	-	1.32(-14)	1.32(-14)
Ta-182	115D	-	8.13(-12)	8.13(-12)
Pu-238	86Y	8.20(-17)	2.98(-15)	3.06(-15)
Pu-239	2.0(4)Y	2.18(-17)	8.00(-16)	8.22(-16)

TABLE 11.2-4 (Continued)

CONCENTRATION OF RADIONUCLIDES AT DISCHARGE
TO CLINCH RIVER DESIGN VALUES

Isotope	Half-Life	Low Activity (μCi/cc)(1)	Intermediate Activity (μCi/cc)(2)	Total Activity (μCi/cc)(3)
Pu-240	6.7(3)Y	2.85(-17)	1.05(-15)	1.09(-15)
Pu-241	13Y	2.36(-15)	8.84(-14)	9.08(-14)
Pu-242	3.8(5)Y	6.03(-20)	2.24(-18)	2.30(-18)
Np-238	2D	9.23(-22)	3.28(-20)	3.38(-20)
Np-239	2.4D	4.23(-18)	1.59(-16)	1.63(-16)
Am-241	433Y	8.40(-18)	3.10(-16)	3.18(-16)
Am-242m	152Y	3.32(-19)	1.23(-17)	1.26(-17)
Am-242	16H	3.32(-19)	1.23(-17)	1.26(-17)
Am-243	7.4(3)Y	1.36(-19)	1.44(-17)	1.45(-17)
Cm-242	163D	5.90 (-18)	2.20(-16)	2.26(-16)
Cm-243	30Y	8.16 (-22)	3.04(-18)	3.04(-18)
Cm-244	18Y	1.71 (-18)	6.32(-17)	8.04(-17)

Notes of Table 11.2-4

(1) Low Activity Liquid Waste Assumptions

a) 1.0% failed fuel and 100 ppb Pu in the primary sodium 30 years irradiation and 10 days decay of fission and activated corrosion products. Decay times in collecting processing and holdup are ignored.

b) 850 gallons per day containing $\sim 10^{-4}$ μCi/cc is decontaminated by a factor of 10^5 except iodine (DF=10^4) and tritium (DF=1) and released to the common plant discharge header of 3.1×10^{12} cc/year.

c) The activity level of 10^{-4} μCi/cc comes from spillage of 3.5 lbs per year of primary sodium into the drainage stream of 850 gallons per day.

(2) Intermediate Activity Liquid Waste Assumptions

a) 1.0% failed fuel and 100 ppb Pu in the primary sodium 30 years irradiation and 10 days decay of fission and activated corrosion products. Decay time in collecting processing and holdup are ignored.

b) 40,000 gallons per year discharged to the common plant discharge header through the LALL monitoring tanks. A DF = 10^5 is used for all isotopes except iodine (DF = 10^4) and tritium (DF=1). This IALL activity is based on the inventory in 16000 gal. of acid etch and in 24,000 gal. of sodium cleaning solution in the IALL monitoring tanks.

(3) Sum of columns 3 and 4

(4) BOP discharge concentration of 7.0 (-7) μCi/cc is not included.

TABLE 11.2-5

EQUIPMENT DESCRIPTION OF LIQUID RADWASTE SYSTEM

Equipment Description	Capacity (gal)	Number of Components	Throughput Rate (gpm)	Quality Class (RG 1-26)*	Seismic Category (RG 1-29)*	Codes	Material	Design Temperature °F	Design Pressure
Piping and Valves	-	-	1-125	D	III	ANS B31.1	SS	200	150 PSI
IALL/LALL Filters	-	2/2	125/50	D	III	ASME VIII	SS	200	150 PSI
IALL Collection Tank	24700	2	-	D	III	API 650	SS	200	Atmos.
LALL Collection Tank	2400	2	-	D	III	API 650	SS	200	Atmos.
Evaporator Prefilters	-	4	10	D	III	ASME VIII	SS	200	150 PSI
Evaporators	-	2	10	D	III	ASME VIII	SS	200	150 PSI
Distillate Demineralizer	-	4	10	D	III	ASME VIII	SS	200	150 PSI
Resin Traps	-	4	10	D	III	ASME VIII	SS	200	150 PSI
IALL Distillate Storage Tank	24700	2	-	D	III	API 650	SS	200	Atmos.
LALL Monitoring Tank	2400	2	-	D	III	API 650	SS	200	Atmos.
Pumps	-	-	1-125	D	III	Manufactu-ers Std.	SS	200	Atmos.
Caustic Neutralizing/ Storage Tank	2500	1	-	D	III	API 650	SS	200	Atmos.
Caustic Feed Tank Antifoam Tank, Resin Feed Tank	150								
Acid Feed Tank	700	1	-	D	III	API 650	HNA	200	Atmos.

* RG - Regulatory Guide

TABLE 11.2-5A

INDOOR RADIOACTIVE WASTE TANKS - PROVISIONS TO PREVENT AND CONTROL OVERFLOW CONDITIONS

Tanks	Provisions
1. Intermediate Activity Level Liquid (IALL) Collection Tank A & B	(a) Liquid Level Indicator in Radwaste Control Room.
	(b) High and Low Liquid Level Annunciator Alarms in Radwaste Control Room.
	(c) IALL Collection Tanks sized so that the two of them can hold the entire system inventory overflow for both tanks is connected to the radwaste sump.
	(d) Cell walls are capable of containing any leakage. The contained liquid is returned to the radwaste sump via floor drains.
	(e) A common Main Control Room alarm from the Radwaste Control Room to annunciate abnormal system conditions in the Radwaste Area.
2. Low Activity Level Liquid (LALL) Collection Tank A & B	(a) Liquid Level Indicator in Radwaste Control Room.
	(b) High and Low Liquid Level Annunciator/ Alarms in Radwaste Control Room.
	(c) Overflow for both tanks is connected to the radwaste sump.
	(d) Floor drains are provided to collect and return any leakage to the radwaste sump.

TABLE 11.2-5A (cont.)

Tanks	Provisions
Low Activity Level Liquid (LALL) Collection Tank A&B (cont.)	(e) A common Main Control Room alarm from the Radwaste Control Room to annunciate abnormal system conditions in the Radwaste area.
3. Concentrated Waste Collection Tank	(a) Liquid Level Indicator on Solid Radwaste Control Console in Radwaste Control Room.
	(b) High and Low Liquid Level Annunciator/ Alarms on Solid Radwaste Control Panel in Radwaste Control Room.
	(c) A 2500 gallon capacity tank provides sufficient volume for several weeks of concentrated waste discharge from both evaporators.
	(d) A floor drain is provided to collect and return any leakage to the radwaste sump.
	(e) Overflow is piped directly to the radwaste sump.
4. LALL Distillate Storage Tank A & B	(a) Liquid Level Indicator in Radwaste Control Room.
	(b) High and Low Liquid Level Annunciator Alarms in Radwaste Control Room.
	(c) LALL Distillate Storage Tanks sized so that two of them can hold the entire system inventory, overflow for both tanks is connected to the radwaste sump.
	(d) Floor drains are provided to collect and return any leakage to the radwaste sump.

TABLE 11.2-5A (cont.)

Tanks	Provisions
ALL Distillate Storage Tank A&B (cont.)	(e) A common Main Control Room alarm from the Radwaste Control Room to annunciate abnormal system conditions in the Radwaste area.
5. LALL Distillate Monitoring Tank A & B	(a) Liquid Level Indicator in Radwaste Control Room.
	(b) High and Low Liquid Level Annunciator/ Alarms in Radwaste Control Room.
	(c) Overflow for both tanks is connected to the radwaste sump.
	(d) Floor drains are provided to collect and return any leakage to the radwaste sump.
	(e) A common Main Control Room alarm from the Radwaste Control Room to annunciate abnormal system conditions in the Radwaste Area.

TABLE 11.2-6

LIQUID RADWASTE RADIOISOTOPE ANNUAL INVENTORY-

DESIGN VALUES

Isotope	Half-Life	Solidified[1] (Ci)	Released (Ci)	Intermediate Stored (Ci)
H-3	12.3Y++	4.3 (-1)	4.56 (-2) +	1.01 (-1)
Na-22	2.6Y	6.24 (-1)	6.78 (-7)	1.50 (-6)
Na-24	15H	7.76 (-2)	8.42 (-8)	1.86 (-7)
Cr-51	28D	2.35 (-1)	8.70 (-7)	8.16 (-6)
Mn-54	312D	1.70 (0)	6.27 (-6)	5.85 (-5)
Co-58	71D	1.10 (1)	5.34 (-5)	5.30 (-4)
Co-60	5.2Y	3.09 (0)	1.50 (-5)	1.49 (-4)
Fe-59	45D	8.08 (-2)	3.91 (-7)	3.88 (-6)
Sr-89	51D	6.58 (-1)	6.60 (-7)	1.58 (-6)
Sr-90	28.8Y	4.73 (-1)	4.74 (-7)	1.14 (-6)
Y-90	64.1H	4.73 (-1)	4.74 (-7)	1.14 (-6)
Y-91	58D	1.93 (-1)	1.95 (-7)	4.64 (-7)
Nd-95	35D	8.09 (0)	3.92 (-5)	3.90 (-4)
Zr-95	64D	8.09 (0)	3.92 (-5)	3.90 (-4)
Mo-99	67D	4.01 (-2)	4.01 (-8)	9.63 (-8)
Ru-103	40D	1.08 (1)	5.20 (-5)	5.16 (-4)
Ru-106	1Y	8.73 (0)	4.21 (-5)	7.84 (-6)
Rh-106	2.2H	8.73 (0)	4.21 (-5)	7.84 (-6)
Ag-111	7.5D	1.30 (-2)	1.30 (-8)	3.12 (-8)
Sb-125	2.7Y	8.63 (-2)	9.37 (-8)	2.07 (-7)
Te-127m	109D	1.35 (0)	1.35 (-6)	3.23 (-6)
Te-127	9.35H	1.35 (0)	1.35 (-6)	3.23 (-6)
Te-129m	34D	4.05 (0)	4.06 (-6)	9.27 (-6)
Te-129	70M	4.05 (0)	4.06 (-6)	9.72 (-6)
Te-132	78H	2.91 (0)	2.92 (-6)	6.99 (-6)
I-131	8.1D	9.70 (-1)	1.60 (-5)	1.81 (-4)
I-132	2.3H	1.92 (0)	7.73 (-6)	1.71 (-5)
Cs-134	2.1D	2.00 (0)	2.44 (-6)	8.26 (-6)
Cs-136	13D	1.98 (0)	2.46 (-6)	8.29 (-6)
Cs-137	30Y	1.58 (1)	1.93 (-5)	3.25 (-4)
Ba-140	12.8D	5.88 (0)	2.84 (-5)	2.82 (-4)
La-140	40H	2.55 (0)	2.55 (-6)	9.88 (-5)
Ce-141	32.5D	4.35 (-1)	4.32 (-7)	1.04 (-6)
Ce-143	33.7D	7.60 (-1)	7.61 (-7)	1.83 (-6)
Pr-143	13.7D	7.60 (-1)	7.61 (-7)	1.83 (-6)
Ce-144	285D	3.11 (-1)	3.11 (-7)	7.47 (-7)
Pr-144	17M	3.11 (-1)	3.11 (-7)	7.47 (-7)
Nd-147	11.1D	7.57 (-2)	9.60 (-8)	2.30 (-7)
Pm-147	2.7D	9.31 (-2)	9.35 (-8)	2.23 (-7)
Eu-155	1.8Y	1.70 (-2)	1.70 (-8)	4.08 (-8)

TABLE 11.2-6 (Continued)

Isotope	Half-Life	Solidified[1] (Ci)	Released (Ci)	Intermediate Stored (Ci)
Ta-182	115D	5.26 (-1)	2.54 (-6)	2.52 (-5)
Pu-238	86Y	3.86 (-3)	4.11 (-9)	9.26 (-9)
Pu-239	2.0(4)Y	1.03 (-3)	1.09 (-9)	2.48 (-9)
Pu-240	2.7(3)Y	1.34 (-3)	1.42 (-9)	3.24 (-9)
Pu-241	13Y	1.14 (-1)	1.21 (-7)	2.74 (-7)
Pu-242	3.8(5)Y	2.89 (-6)	3.07 (-12)	6.96 (-12)
Np-238	2D	4.23 (-8)	4.51 (-14)	1.01 (-13)
Np-239	2.4D	2.05 (-4)	2.17 (-10)	4.92 (-10)
Am-241	433Y	4.01 (-4)	4.26 (-10)	9.62 (-10)
Am-242m	152Y	1.58 (-5)	1.68 (-11)	3.80 (-11)
Am-242	16H	1.58 (-5)	1.68 (-11)	3.80 (-11)
Am-243	7.3(3)Y	1.85 (-5)	1.89 (-11)	4.46 (-11)
Cm-242	163D	2.85 (-4)	3.02 (-10)	6.84 (-10)
Cm-243	30Y	3.90 (-6)	3.89 (-12)	9.44 (-12)
Cm-244	18Y	8.14 (-5)	8.65 (-11)	1.96 (-10)

[1] Solidified Activity includes contributions from all sodium cleaning solutions and acid etches of the component cleaning process.

+ Does not include BOP design release rate of 8.45×10^{-3} Ci/day

++ Y=years, D=days, H=hours

TABLE 11.2-7

DESIGN EFFLUENT CONCENTRATIONS, MAXIMUM PERMISSIBLE EFFLUENT CONCENTRATIONS (MPC)(1) AND FRACTION OF MPC AT DISCHARGE TO RIVER

Isotope	Half-Life	Effluent (3) Concentration (μCi/cc)	MPC 10CFR20 (μCi/cc) (1)	Fraction MPC
H-3(2)	12.3Y	3.36 (-8)	3 (-3)	1 (-5)
Na-22	2.6Y	6.79 (-14)	3 (-5)	2 (-9)
Na-24	15H	6.22 (-14)	3 (-5)	2 (-9)
Cr-51	28D	2.63 (-12)	2 (-3)	1 (-9)
Mn-54	312D	1.89 (-11)	1 (-4)	2 (-7)
Co-58	71D	1.71 (-10)	9 (-5)	2 (-6)
Co-60	5.2Y	4.81 (-11)	3 (-5)	2 (-6)
Fe-59	45D	1.25 (-12)	5 (-5)	3 (-8)
Sr-89	51D	5.10 (-13)	3 (-5)	2 (-8)
Sr-90	28.8Y	3.68 (-13)	3 (-7)	1 (-6)
Y-90	64.1H	3.68 (-13)	2 (-5)	2 (-8)
Y-91	58D	1.50 (-13)	3 (-5)	5 (-9)
Nb-95	35D	1.26 (-10)	6 (-5)	2 (-6)
Zr-95	64D	1.26 (-10)	1 (-4)	1 (-6)
Mo-99	67D	3.11 (-13)	4 (-5)	8 (-10)
Ru-103	40D	1.66 (-10)	8 (-5)	2 (-6)
Ru-106	1Y	2.53 (-12)	3 (-6)	8 (-7)
Rh-106	2.2H	2.53 (-12)	1 (-5)	3 (-7)
Ag-111	7.5D	1.01 (-14)	4 (-5)	3 (-10)
Sb-125	2.7Y	6.96 (-14)	1 (-4)	7 (-10)
Te-127m	109D	1.04 (-12)	3 (-4)	4 (-9)
Te-127	9.35H	1.04 (-12)	3 (-5)	4 (-8)
Te-129m	34D	3.14 (-12)	2 (-5)	2 (-7)
Te-129	70M	3.14 (-12)	8 (-4)	4 (-9)
Te-132	78H	2.25 (-12)	2 (-5)	1 (-7)
I-131	8.1D	5.95 (-11)	3 (-7)	2 (-4)
I-132	2.3H	5.72 (-12)	8 (-6)	7 (-7)
Cs-134	2.1D	2.71 (-12)	3 (-6)	9 (-7)
Cs-136	13D	2.73 (-12)	6 (-5)	5 (-8)
Cs-137	30Y	1.05 (-10)	2 (-5)	5 (-6)
Ba-140	12.8D	9.10 (-11)	2 (-5)	5 (-6)
La-140	40H	9.10 (-11)	2 (-5)	5 (-6)
Ce-141	32.5D	3.53 (-13)	9 (-5)	4 (-9)
Ce-143	32.5D	5.90 (-13)	4 (-5)	2 (-8)
Pr-143	13.7D	5.90 (-13)	5 (-5)	1 (-8)
Ce-144	285D	2.41 (-13)	1 (-5)	2 (-8)
Pr-144	17M	2.41 (-13)	3 (-6)	8 (-8)
Nd-147	11.1D	7.42 (-14)	6 (-5)	1 (-9)
Pm-147	2.7D	7.42 (-14)	2 (-5)	4 (-9)
Eu-155	1.8Y	1.32 (-14)	2 (-4)	7 (-11)
Ta-182	115D	8.13 (-12)	4 (-5)	2 (-7)

TABLE 11.2-7 (Continued)

Isotope	Half-Life	Effluent (3) Concentration (μCi/cc)	MPC 10CFR20 (μCi/cc) (1)	Fraction MPC
Pu-238	86Y	3.06 (-15)	5 (-6)	6 (-10)
Pu-239	2.0(4)Y*	8.22 (-16)	5 (-6)	2 (-10)
Pu-240	6.7(3)Y	1.09 (-15)	5 (-6)	2 (-10)
Pu-241	13Y	9.08 (-14)	2 (-4)	4 (-10)
Pu-242	3.8(5)Y	2.30 (-18)	5 (-6)	5 (-13)
Np-239	2.4D	1.59 (-16)	1 (-4)	2 (-12)
Am-241	433Y	3.10 (-16)	4 (-6)	8 (-11)
Am-242m	152Y	1.23 (-17)	4 (-6)	3 (-12)
Am-242	16H	1.23 (-17)	1 (-4)	1 (-13)
Am-243	7.4(3)Y	1.44 (-17)	4 (-6)	4 (-12)
Cm-242	163D	2.20 (-16)	2 (-5)	1 (-11)
Cm-243	30Y	3.04 (-18)	5 (-6)	6 (-13)
Cm-244	18Y	6.32 (-17)	7 (-6)	9 (-12)

(1) 10CFR20, Appendix B, Table II, Column 2

(2) Does not include BOP releases of $7.0E^{-7}$

(3) See Table 11.2-4

* 2.0 (4)Y = 2.0×10^4 Years

TABLE 11.2-8 DELETED

TABLE 11.2-9

DOSE RATES RECEIVED BY AN INDIVIDUAL VIA EXPOSURE TO CRBRP LIQUID EFFLUENTS† (MREM/YR)

Doses	Contaminated River Sediment	Immersion	Above-Water Activities	Ingestion of Aquatic Food	Ingestion of Water
Total Body Gamma	1.6×10^{-6}	4.6×10^{-6}	1.4×10^{-5}	----------	----------
Beta Total Skin	1.9×10^{-6}	6.0×10^{-6}	1.8×10^{-5}	----------	----------
Whole Body Internal	----------	----------	----------	3.4×10^{-2}	1.3×10^{-1}
Bone	----------	----------	----------	2.4×10^{-4}	3.3×10^{-3}
GI Tract	----------	----------	----------	1.8×10^{-3}	4.6×10^{-5}
Thyroid (Adult)	----------	----------	----------	1.9×10^{-3}	5.3×10^{-4}
Kidney	----------	----------	----------	5.4×10^{-4}	1.5×10^{-5}

†Based on 1.0% Failed Fuel for fission products and 100 ppb plutonium in primary sodium.

Amend. 49
Apr. 1979

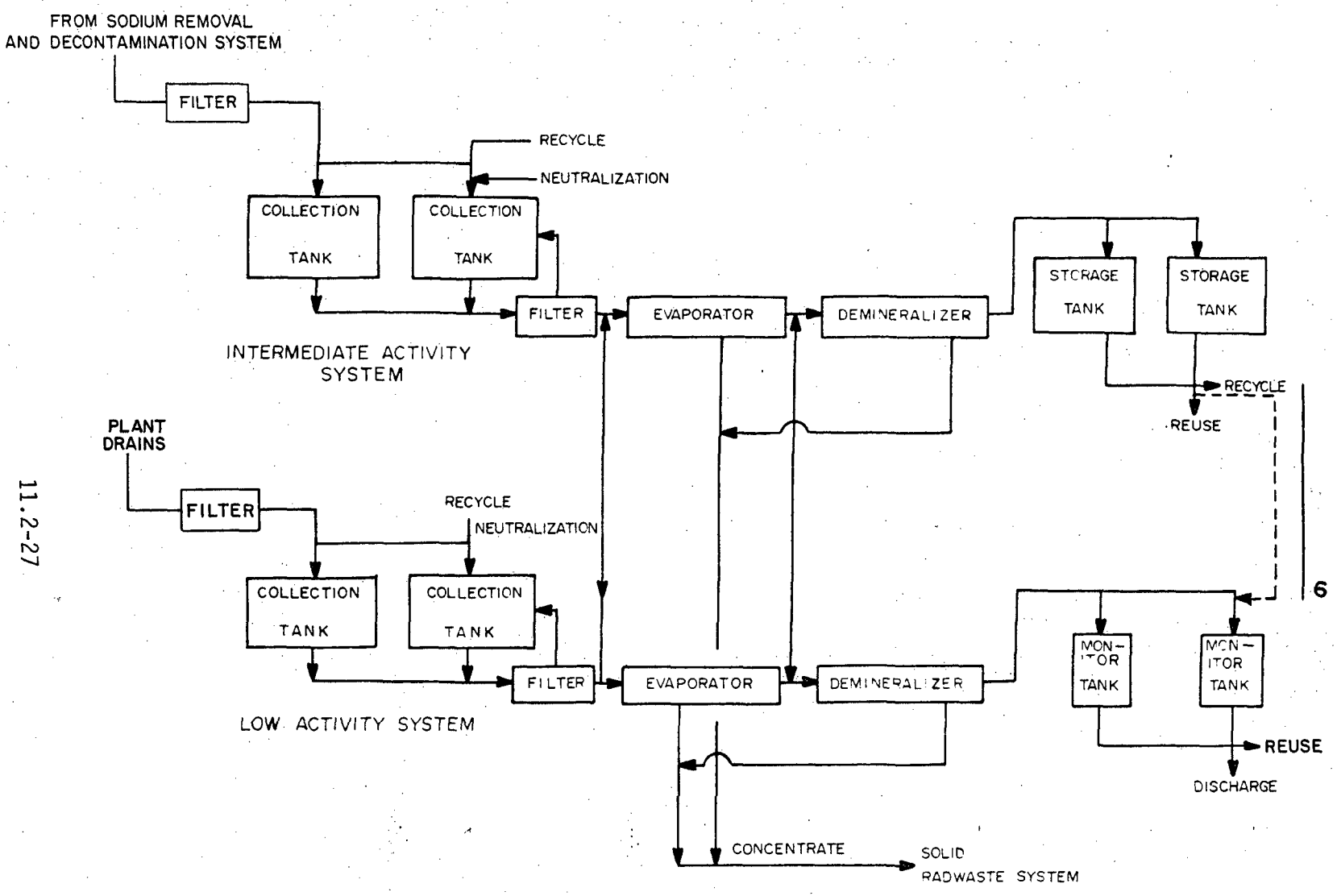

Figure 11.2-1 LIQUID RADWASTE SYSTEM FLOW DIAGRAM

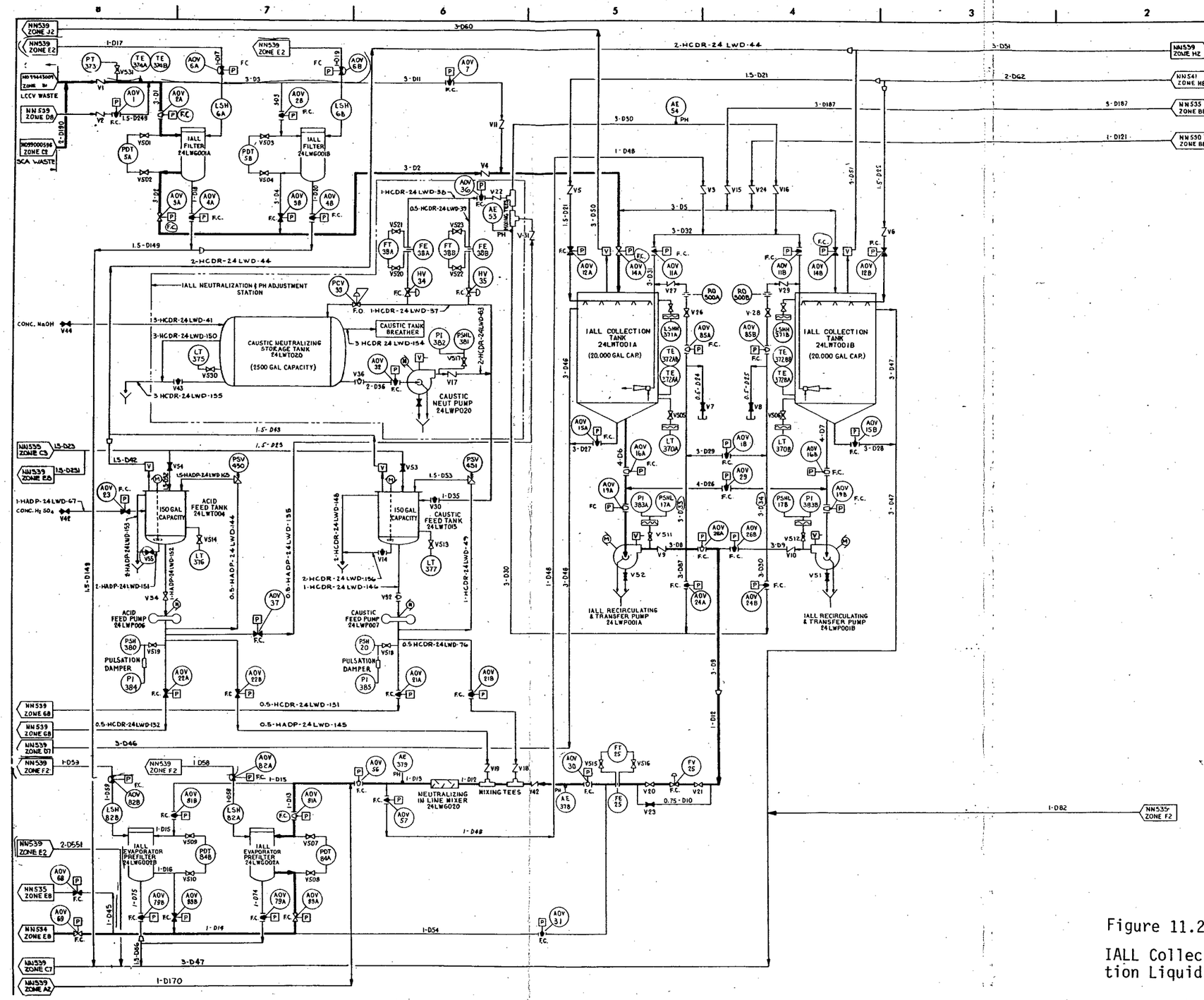

GENERAL NOTES

1. LINE NUMBERS IN THE LIQUID AND SOLID WASTE SYSTEM ARE ABBREVIATED AS FOLLOWS: 2-HCDT-24LWD-24 IS WRITTEN 2-D24 & 2-HCDT-24SWD-24 IS WRITTEN 2-SW-D24. ALL OTHER LINE DESIGNATIONS ARE AS NOTED ON EACH INDIVIDUAL LINE.
2. EQUIPMENT NUMBERS FOR MOTORS ARE IDENTICAL TO THE EQUIPMENT NUMBER FOR THE DRIVEN EQUIPMENT EXCEPT THAT THE LETTER "M" IS SUBSTITUTED FOR THE EQUIPMENT TYPE.
3. ALL INSTRUMENT AND CONTROL VALVE NUMBERS ON THIS DWG SHALL BE PREFIXED BY 24LW UNLESS NOTED OTHERWISE
4. UNLESS OTHERWISE INDICATED BY SYMBOLOGY ALL DIAPHRAGM VALVES ARE SPRING OPPOSED WITH POSITIONER AS APPLICABLE.
5. PIPE LINE REDUCERS & INCREASERS SHOWN ARE PRELIMINARY. AFTER PIPE ROUTING HAS BEEN COMPLETED THE ACTUAL PIPE CONNECTIONS WILL BE DETERMINED & THE LOCATION OF REDUCERS & INCREASERS SHOWN ACCORDINGLY.
6. ALL INSTRUMENTS, VALVES & CONTROL VALVES HAVING AN ASTERISK (*) SHALL BE PREFIXED BY 24SW.
7. SYMBOLS & ABBREVIATIONS AS PER WARD DOC. D-0036.
8. SYSTEM CLEANLINESS CLASSIFICATIONS ANSI CLASS B FOR INSTRUMENTATION, ANSI CLASS C FOR ALL OTHER COMPONENTS & PIPING.

REFERENCE DRAWINGS

P & I DIAGRAMS

NN528 COMPRESSED AIR SUPPLY
NN530 SOLID RADIOACTIVE WASTE
NN534 IALL EVAPORATION
NN535 IALL DEMINERALIZATION & DISCH
NN539 LALL COLLECTION & NEUTR.
NN540 LALL EVAPORATION
NN541 LALL DMNRLZTION & DISCH.
NN570 COOLING WATER SUPPLY SDD75A
NN581 HTHW SUPPLY SDD75A
BM550 WASTE WATER DISPOSAL SYSTEM SDD76
N099000596 RSB SMALL COMPONENT AUTOCLAVE SODIUM REMOVAL SYSTEM SDD44SR
N099443009 LCCV SYSTEM
NV520 RSB-RW AREA HVAC

INSTRUMENT LOOP DIAGRAMS

NE4784 IALL COLLECTION & NEUTRALIZATION
NE4785 IALL COLLECTION & NEUTRALIZATION
NE4786 IALL COLLECTION & EVAPORATION
NE4787 IALL COLLECTION & EVAPORATION
NE4788 IALL RADWASTE PROCESSING

Figure 11.2-2

IALL Collection & Neutralization Liquid Radioactive Waste

NN533-5

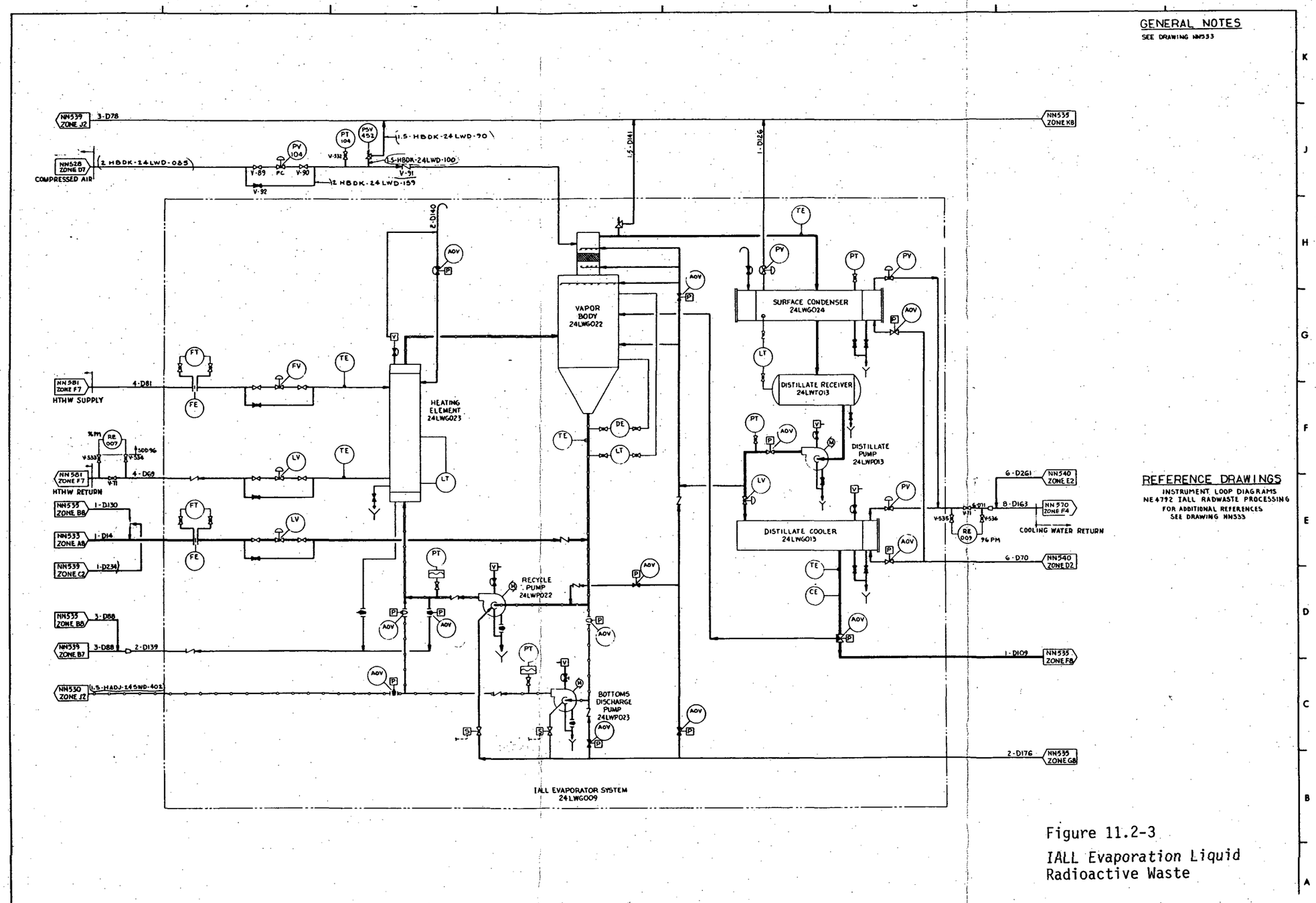

Figure 11.2-3

IALL Evaporation Liquid Radioactive Waste

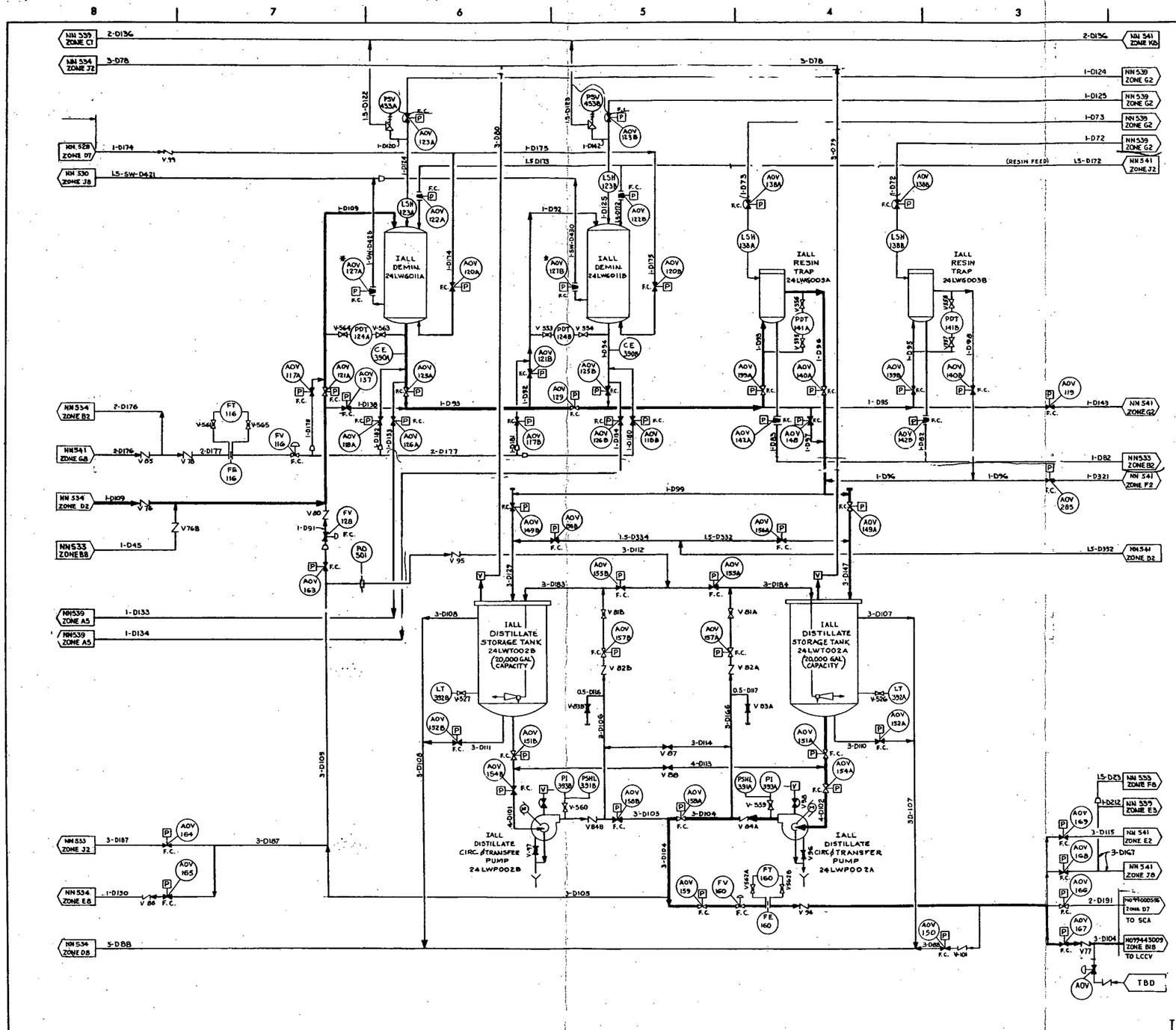

GENERAL NOTES

SEE DRAWING NN533

REFERENCE DRAWINGS

INSTRUMENT LOOP DIAGRAMS
NE4789 IALL RADWASTE PROCESSING
NE4790 IALL RADWASTE PROCESSING
NE4791 IALL RADWASTE PROCESSING
NE4792 IALL RADWASTE PROCESSING

FOR ADDITIONAL REFERENCES SEE DRAWING NN533

Figure 11.2-4

IALL Demineralization and Discharge Liquid Radioactive Waste

NN535-4

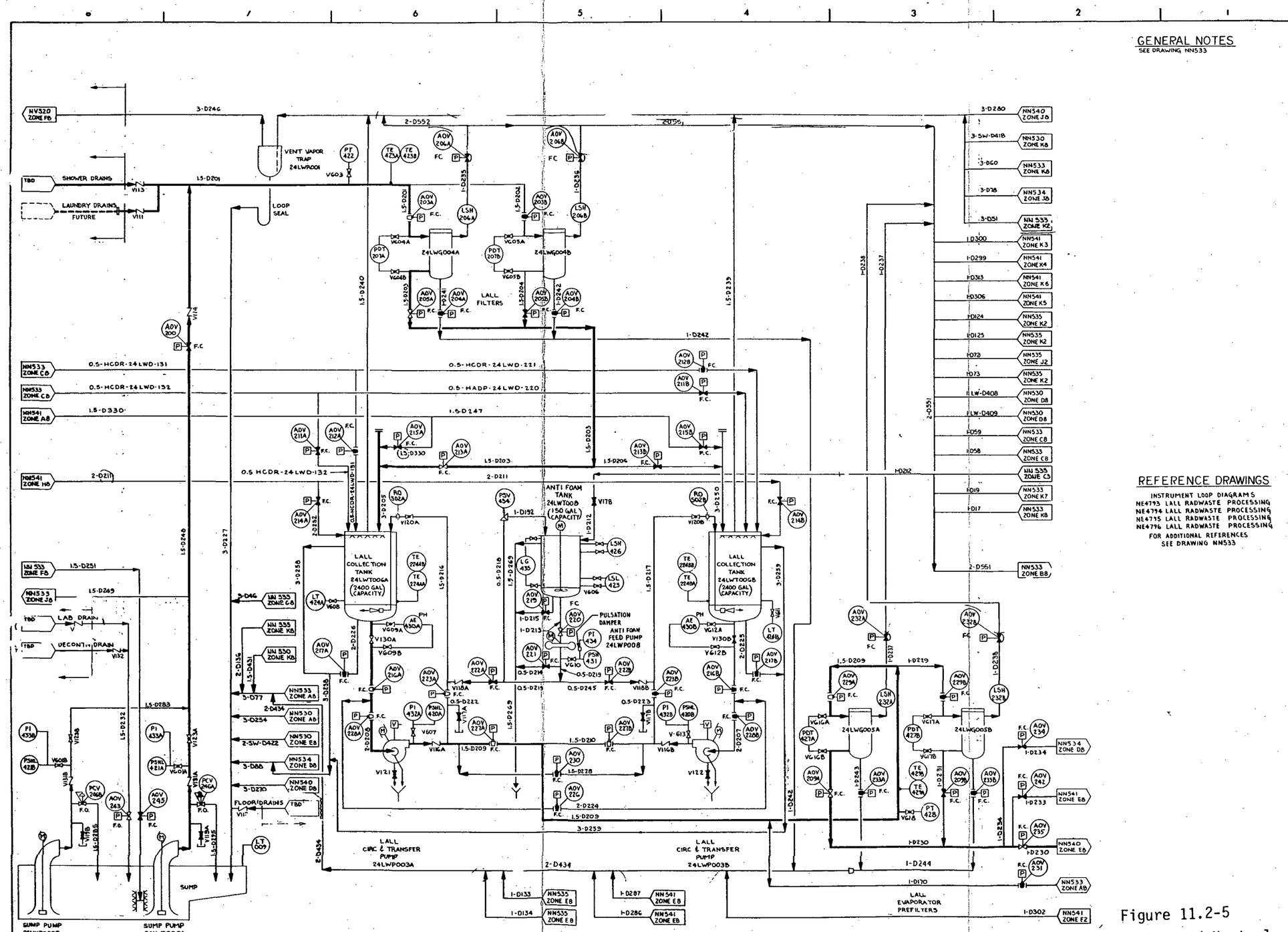

Figure 11.2-5

LALL Collection and Neutralization Liquid Radioactive Waste

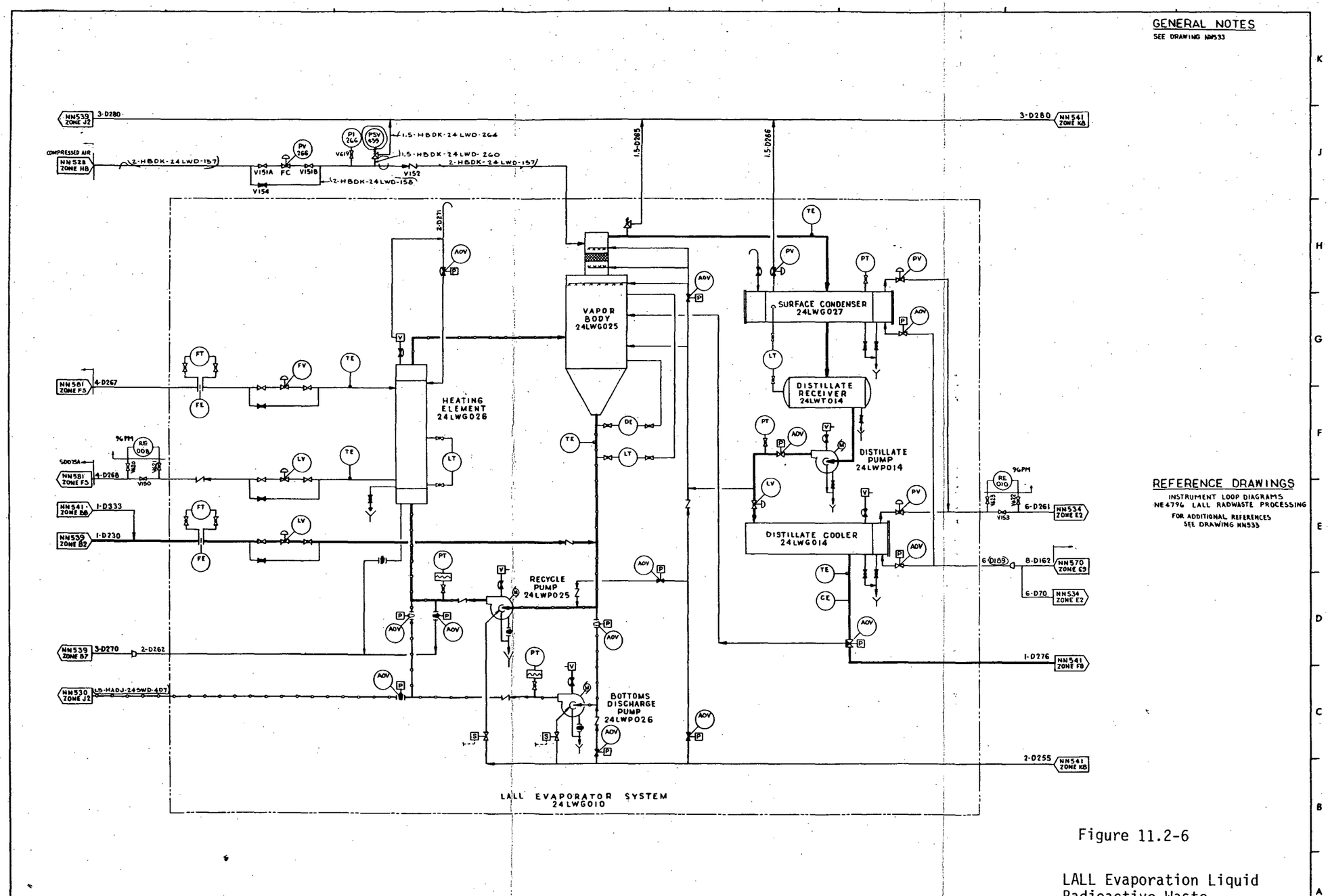

Figure 11.2-6

LALL Evaporation Liquid Radioactive Waste

NN540-3

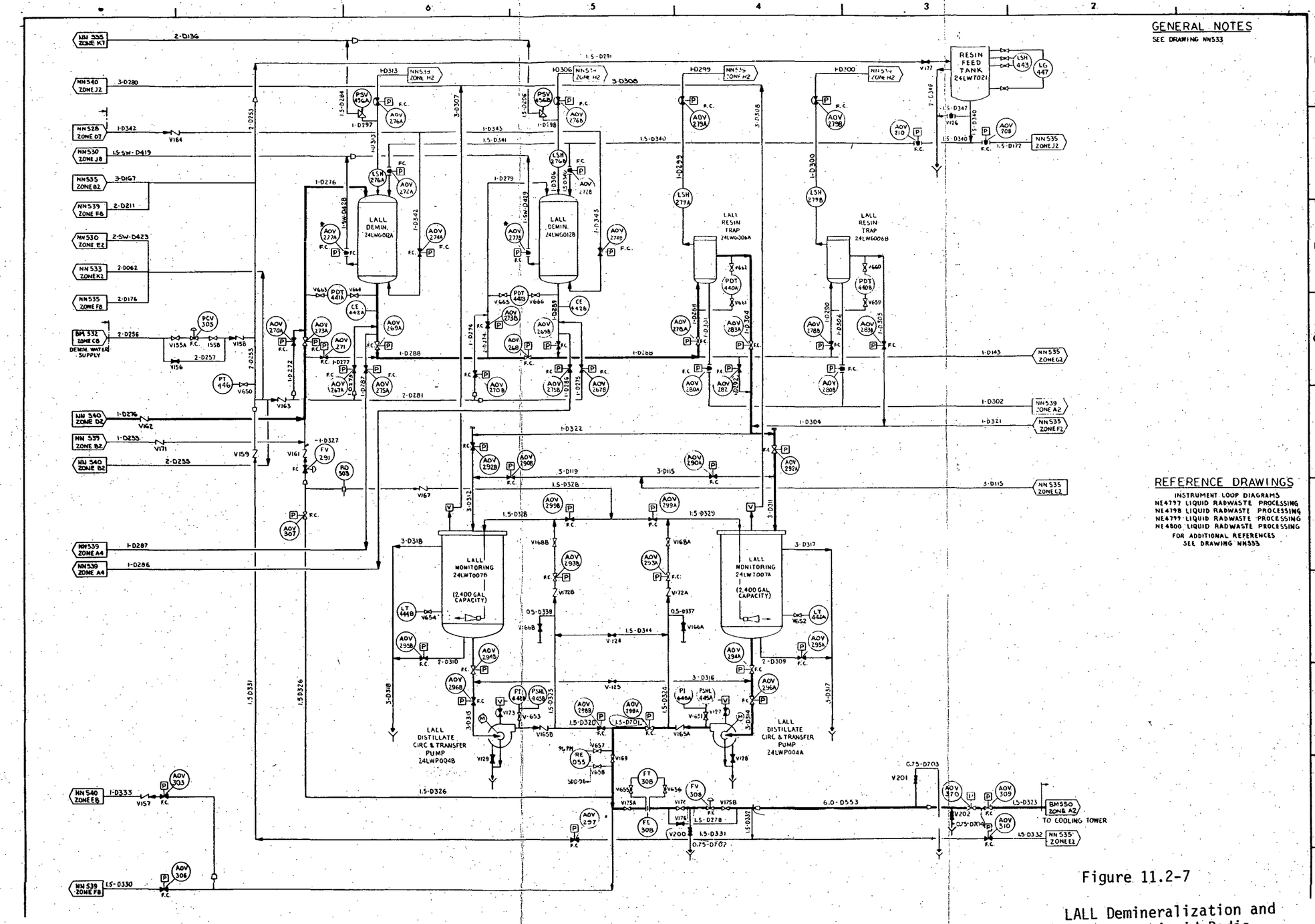

Figure 11.2-7

LALL Demineralization and Discharge Liquid Radioactive Waste

Amend. 65
Feb. 1982

APPENDIX 11.2A DOSE MODELS: LIQUID EFFLUENTS

EXTERNAL WHOLE BODY DOSE TO MAN FROM SHORELINE DEPOSITS

Gamma dose rate to an individual above a uniformly contaminated plane is calculated by the following equation:

$$DSED = 10^2 \, (TS) \, (WW) \sum_i (TRN)_i \, (CW)_i \, (DSD)_i$$

$$\times \left[1 - \exp\left(\frac{-0.693 \, TTS}{(TRN)_i}\right)\right] (DFS) \left[\exp\left(\frac{-0.693 \, TIM}{(TRN)_i}\right)\right] \qquad (1)$$

where,

DSED = Whole body dose rate from contaminated shoreline, mrem/yr

TS = Time of exposure to sediment, hrs/yr

WW = Water body width factor, no units. Values are tabulated in Table 11.2A-1.

$(TRN)_i$ = Radioactive half-life of isotope, i, days. Values are tabulated in Table 11.3A-1

$(CW)_i$ = Concentration in water of isotope, i, pCi/cc

$(DSD)_i$ = Dose conversion factor for shoreline sediment, mrem/hr per pCi/m^2. Values are tabulated in Table 11.2A-2.

TTS = Total time of immersion of sediment in contaminated receiving water (normally taken to be the operating lifetime of the facility), days

DFS = Dilution factor for isotope concentration at sediment location, ≤ 1.0

TIM = Elapsed time between isotope release and exposure, days

10^2 = Constant derived from water and sediment sample data collected from the Columbia River and Tillamook Bay and compared with data from other aquatic systems. (Ref. 1)

EXTERNAL DOSES TO MAN FROM IMMERSION IN CONTAMINATED WATER

The whole body gamma dose rate from immersion in effluent waters is calculated as:

$$DGIM = \sum_i (CW)_i \ (DFGAM)_i \ (TI) \ (DFAC) \left[\exp\left(\frac{-0.693 \ TIM}{(TRN)_i} \right) \right] \times 10^9 \qquad (2)$$

where,

DGIM = Gamma dose rate, mrem/yr

$(CW)_i$ = Concentration in discharge water of isotope, i, μCi/cc

$(DFGAM)_i$ = Whole body dose conversion factor for immersion in water containing isotope, i, mrem/hr per pCi/l. Values are tabulated in Table 11.2A-2.

TI = Time of exposure, hrs/yr

DFAC = Dilution factor of isotopes in receiving water, ≤ 1.0

TIM = Elapsed time between isotope release and exposure, days

$(TRN)_i$ = Radioactive half-life of isotope, i, days. Values are tabulated in Table 11.3A-1.

10^9 = Factor to convert μCi/cc to pCi/l.

41 The total skin dose rate from immersion in effluent waters is calculated as:

$$DBIM = \sum_i (CW)_i \ (DFBETA)_i \ (TI) \ (DFAC) \left[\exp\left(\frac{-0.693 \ TIM}{(TRN)_i} \right) \right] \times 10^9 \ . \qquad (3)$$

where,

41 DBIM = Dose rate to the skin, mrem/yr

$(CW)_i$ = Concentration in discharge water of isotope, i, μCi/cc

41 $(DFBETA)_i$ = Skin dose conversion factor for immersion in water containing isotope, i, mrem/hr per pCi/l. Values are tabulated in Table 11.2A-2.

TI = Time of immersion, hrs/yr

DFAC = Dilution factor of isotopes in receiving water, ≤ 1.0

TIM = Elapsed time between isotope release and exposure, days

$(TRN)_i$ = Radioactive half-life of isotope, i, days. Values are tabulated in Table 11.3A-1.

10^9 = Factor to convert μCi/cc to pCi/l.

The population dose from water immersion is:

$$DPIM = (DGIM)\ (PIM) \times 10^{-3} \tag{4}$$

where,

DPIM = The population dose from water immersion, man-rem/yr

10^{-3} = Factor to convert mrem to rem

PIM = Population engaged in immersion in effluent discharge waters

DGIM = Gamma dose rate, mrem/yr.

EXTERNAL DOSES TO MAN FROM ABOVE-WATER ACTIVITIES

External gamma exposure from above-water activities is calculated by the following method:

$$DGAW = \frac{1}{2}\ (DGIM) \left(\frac{TAW}{TI}\right) \tag{5}$$

where,

DGAW = Gamma dose rate for above-water activities (boating, water-skiing, fishing, swimming), mrem/yr

DGIM - Gamma dose rate received from immersion in effluent water, mrem/yr

TAW = Number of hours spent in above-water activities, hr/yr. Data are presented in Table 11.2A-5.

TI = Number of hours spent in immersion, hr/yr. Data are presented in Table 11.2A-5.

$\frac{1}{2}$ = Geometry factor for above-water activities, no units.

41 Total exposure to the skin from above-water activities is calculated as:

$$DBAW = \frac{1}{2}\ (DBIM) \left(\frac{TAW}{TI}\right) \tag{6}$$

Amend. 41
Oct. 1977

where,

DBAW = Beta dose rate to the skin from above-water activities, mrem/yr

DBIM = Beta dose rate to the skin received from immersion in effluent water, mrem/yr

TAW = Number of hours spent in above-water activities, hr/yr. Data are presented in Table 11.2A-5.

TI = Number of hours spent in immersion, hr/yr. Data are presented in Table 11.2A-5.

$\frac{1}{2}$ = Geometry factor for above-water activities, no units.

Population dose from above-water activities is:

$$DPAW = (DGAW)\ (PAW) \times 10^{-3} \tag{7}$$

where,

DPAW = Population dose, man-rem/yr

DGAW = Whole body gamma dose to an individual from above-water activities, mrem/yr

PAW = Population engaged in above-water activities on the effluent discharge waters

10^{-3} = Factor to convert mrem to rem.

INTERNAL DOSES TO MAN FROM INGESTION OF POTABLE WATER

The dose to whole body and various organs received by ingestion of potable water contaminated by liquid effluents can be calculated using the following equation:

$$DWP = \sum_i \frac{\left(\frac{MPD}{MPC_w}\right)_i (CW)_i\ (G_w)}{GWA} \left[\exp\left(\frac{-0.693\ TIM}{(TRN)_i}\right)\right](DF) \tag{8}$$

where,

DWP = The dose rate from ingestion of isotope, i, mrem/yr

$\left(\frac{MPD}{MPC_w}\right)_i$ = Dose conversion factor, mrem/yr per μCi/cc, which is the maximum permissible dose (MPD) per year divided by the maximum permissible concentration in water (MPC_w) for isotope, i. Dose conversion factors for calculating internal doses are tabulated in Table 11.2A-3.

$(CW)_i$ = The concentration in discharge water of isotope, i, μCi/cc

G_W = The amount of water ingested, g/day

GWA = Amount of water ingested by an adult, g/day (a value of 2,200 g/day is assumed)

TIM = Elapsed time between isotope release and ingestion, days

$(TRN)_i$ = Radioactive half-life for isotope, i, days. Values are tabulated in Table 11.3A-1.

DF = Dilution factor in receiving water, ≤1.0.

INTERNAL DOSES TO MAN FROM INGESTION OF AQUATIC FOODS

The dose to whole body and various organs received from ingestion of aquatic food contaminated with radioactive material is calculated as:

$$DOSE = \sum_i \left(\frac{MPD}{MPC_w}\right)_i (BCF)_i \left(\frac{G_F}{GWA}\right) (CW)_i \left[\exp\left(\frac{-0.693\ TIM}{(TRN)_i}\right)\right] (DF)\ (HF) \qquad (9)$$

where,

DOSE = The dose rate from ingestion of isotope, i, mrem/yr

$\left(\frac{MPD}{MPC_w}\right)_i$ = Dose conversion factor, mrem/yr per μCi/cc, which is the maximum permissible dose (MPD) per year divided by the maximum permissible concentration in water (MPC_w) for isotope, i. Dose conversion factors for calculating internal doses are tabulated in Table 11.2A-3.

$(BCF)_i$ = Bioaccumulation factor for isotope, i. Values are tabulated in Table 11.2A-4.

G_F = Amount of food ingested, g/day

GWA = Amount of water ingested by an adult, g/day (2,200 g/day assumed)

$(CW)_i$ = Concentration in discharge water of isotope, i, μCi/cc

TIM = Elapsed time between isotope release and ingestion, days

$(TRN)_i$ = Radioactive half-life of isotope, i, days. Values are tabulated in Table 11.3A-1.

DF = Dilution factor in receiving waters, ≤1.0

HF = Fraction of year water is ingested, ≤1.0.

Doses should be calculated separately for each kind of aquatic food ingested and then summed to obtain a total dose from ingestion of aquatic foods.

The population dose from ingestion of aquatic foods is calculated in the following manner:

$$PODA = 10^{-3} \sum_j \left[\frac{(W)_j \ (WF)_j \ (DOSE)_j}{(G)_j} \right] \qquad (10)$$

where,

PODA = Whole body gamma dose from ingestion of all aquatic foods, man-rem/yr

$(W)_j$ = Respective total weights of fish, crustacea and mollusk taken from the vicinity of the effluent discharge, g/day

$(WF)_j$ = Fractional weight of each of the species which is edible, ≤1.0

41 $(DOSE)_j$ = Dose rate to an individual from food, j, calculated above in equation (9), mrem/yr

$(G)_j$ = Amount of food, j, ingested by an individual, g/day-person. Data are presented in Table 11.2A-5.

10^{-3} = Factor to convert mrem to rem.

REFERENCES - APPENDIX 11.2A

1. Final Environmental Statement Concerning Proposed Rulemaking Action: Numerical Guides for Design Objectives and Limiting Conditions for Operation to meet the Criterion "As Low as Practicable" for Radioactive Material in Light-Water-Cooled Nuclear Power Reactor Effluents, WASH-1258, US Atomic Energy Commission, U.S. AEC, July, 1973.

2. International Commission on Radiological Protection, ICRP Publication 2, Report of Committee II on Permissible Dose for Internal Radiation, Pergamon Press. 1959.

TABLE 11.2A-1

WATER BODY WIDTH FACTORS FOR ESTIMATING GAMMA EXPOSURE FROM CONTAMINATED SEDIMENT (REF. 1)

Width Factor	Exposure Situation
0.1	Discharge canal bank
0.2	Riverbank
0.3	Lakeshore
0.5	Nominal ocean site
1.0	Tidal basin
2.0	Crustacea or shellfish

TABLE 11.2A-2

DOSE CONVERSION FACTORS FOR TOTAL BODY AND SKIN EXPOSURE VIA IMMERSION IN WATER AND SHORELINE DEPOSITS (REF. 1)

Isotope	Immersion in Water Total Body (mrem/hr per pCi/l)	Immersion in Water Skin (mrem/hr per pCi/l)	Shoreline Deposits Total Body (mrem/hr per pCi/m^2)	Shoreline Deposits Skin (mrem/hr per pCi/m^2)
H-3	0	0	0	0
Na-22	4.0×10^{-6}	4.8×10^{-6}	1.6×10^{-8}	1.8×10^{-8}
Na-24	7.8×10^{-6}	9.3×10^{-6}	2.5×10^{-8}	2.9×10^{-8}
Ne-23	NA	NA	NA	NA
Ar-39	6.2×10^{-10}	1.3×10^{-7}	0	0
Ar-41	2.4×10^{-6}	3.2×10^{-6}	0	0
Cr-51	5.2×10^{-8}	6.4×10^{-8}	2.2×10^{-10}	2.6×10^{-10}
Mn-54	1.5×10^{-6}	1.8×10^{-6}	5.8×10^{-9}	6.8×10^{-9}
Fe-59	2.2×10^{-6}	2.9×10^{-6}	8.0×10^{-9}	9.4×10^{-9}
Co-58	1.8×10^{-6}	2.3×10^{-6}	7.0×10^{-9}	8.2×10^{-9}
Co-60	4.6×10^{-6}	5.4×10^{-6}	1.7×10^{-8}	2.0×10^{-8}
Kr-83m	3.1×10^{-9}	7.9×10^{-9}	0	0
Kr-85	4.7×10^{-9}	1.8×10^{-7}	0	0
Kr-85m	2.8×10^{-7}	5.1×10^{-7}	0	0
Kr-87	2.7×10^{-6}	4.6×10^{-6}	0	0
Kr-88	3.3×10^{-6}	4.1×10^{-6}	0	0
Sr-89	4.6×10^{-9}	5.4×10^{-7}	5.6×10^{-13}	6.5×10^{-13}
Sr-90	5.4×10^{-10}	1.5×10^{-7}	0	0
Y-89m	NA	NA	NA	NA
Y-90	1.3×10^{-8}	9.6×10^{-7}	2.2×10^{-12}	2.6×10^{-12}
Y-91	9.1×10^{-9}	5.6×10^{-7}	2.4×10^{-11}	2.7×10^{-11}
Zr-95	1.5×10^{-6}	1.8×10^{-6}	5.0×10^{-9}	5.8×10^{-9}
Nb-95	1.4×10^{-6}	1.6×10^{-6}	5.1×10^{-9}	6.0×10^{-9}
Mo-99*	4.7×10^{-7}	9.1×10^{-7}	1.9×10^{-9}	2.2×10^{-9}
Ru-103*	8.9×10^{-7}	1.1×10^{-6}	4.2×10^{-9}	3.6×10^{-9}
Ru-106*	3.8×10^{-7}	1.9×10^{-6}	1.8×10^{-9}	1.5×10^{-9}

TABLE 11.2A-2 (Continued)

Isotope	Immersion in Water Total Body (mrem/hr per pCi/l)	Immersion in Water Skin (mrem/hr per pCi/l)	Shoreline Deposits Total Body (mrem/hr per pCi/m^2)	Shoreline Deposits Skin (mrem/hr per pCi/m^2)
Rh-106	NA	NA	NA	NA
Ag-111	4.8×10^{-8}	3.8×10^{-7}	2.1×10^{-10}	1.8×10^{-10}
Sb-125	7.8×10^{-7}	9.5×10^{-7}	3.1×10^{-9}	3.5×10^{-9}
Te-129	1.9×10^{-7}	7.0×10^{-7}	7.1×10^{-10}	8.4×10^{-10}
Te-129m*	2.1×10^{-7}	7.4×10^{-7}	7.7×10^{-10}	9.0×10^{-10}
Te-132	4.0×10^{-7}	4.8×10^{-7}	1.7×10^{-9}	2.0×10^{-9}
I-131	6.8×10^{-7}	9.3×10^{-7}	2.8×10^{-9}	3.4×10^{-9}
I-132	4.4×10^{-6}	5.5×10^{-6}	1.7×10^{-8}	2.0×10^{-8}
Xe-131m	6.2×10^{-9}	5.6×10^{-8}	0	0
Xe-133	5.7×10^{-8}	1.1×10^{-7}	0	0
Xe-133m	6.0×10^{-8}	1.0×10^{-7}	0	0
Xe-135	4.5×10^{-7}	7.9×10^{-7}	0	0
Xe-135m	7.6×10^{-7}	1.0×10^{-6}	0	0
Xe-138	2.6×10^{-6}	3.4×10^{-6}	0	0
Cs-134	2.9×10^{-6}	3.5×10^{-6}	1.2×10^{-8}	1.4×10^{-8}
Cs-136	5.6×10^{-6}	4.9×10^{-6}	1.5×10^{-8}	1.7×10^{-8}
Cs-137	1.0×10^{-6}	1.4×10^{-6}	4.2×10^{-9}	4.9×10^{-9}
Ba-140	4.9×10^{-7}	7.6×10^{-7}	2.1×10^{-9}	2.4×10^{-9}
La-140	4.1×10^{-6}	5.3×10^{-6}	1.5×10^{-8}	1.7×10^{-8}
Ce-141	1.3×10^{-7}	2.4×10^{-7}	5.5×10^{-10}	6.2×10^{-10}
Ce-144*	8.6×10^{-8}	1.4×10^{-6}	3.2×10^{-10}	3.7×10^{-10}
Pr-143	1.6×10^{-9}	2.8×10^{-7}	0	0
Pr-144	5.6×10^{-7}	1.3×10^{-6}	2.0×10^{-10}	2.3×10^{-10}
Nd-147	2.8×10^{-7}	5.0×10^{-7}	1.0×10^{-9}	1.2×10^{-9}
Pm-147	7.5×10^{-11}	1.3×10^{-8}	0	0
Eu-155	NA	NA	NA	NA
Ta-182	NA	NA	NA	NA

TABLE 11.2A-2 (Continued)

Isotope	Immersion in Water Total Body (mrem/hr per pCi/l)	Immersion in Water Skin (mrem/hr per pCi/l)	Shoreline Deposists Total Body (mrem/hr per pCi/m^2)	Shoreline Deposists Skin (mrem/hr per pCi/m^2)
Pu-238	1.5×10^{-10}	4.0×10^{-9}	1.3×10^{-12}	1.8×10^{-11}
Pu-239	1.2×10^{-10}	1.7×10^{-9}	7.9×10^{-13}	7.7×10^{-12}
Pu-240	1.4×10^{-10}	4.0×10^{-9}	1.3×10^{-12}	1.8×10^{-11}
Pu-241*	6.1×10^{-11}	9.5×10^{-11}	4.6×10^{-12}	6.8×10^{-12}
Pu-242	1.1×10^{-10}	3.6×10^{-9}	1.1×10^{-12}	1.6×10^{-11}

*Includes contribution from daughter products.
NA - Not available.

TABLE 11.2A-3

DOSE CONVERSION FACTORS* FOR EXPOSURE VIA INGESTION OF WATER
TO RADIOACTIVE MATERIALS RELEASED FROM THE CRBRP RADWATE SYSTEMS
mrem/yr per μCi/cc

Isotope	Whole Body	Bone	GI Tract**	Thyroid (adult)	Kidney
H-3	1.0×10^5	--	--	--	--
Na-22	1.3×10^7	--	5.0×10^6	--	--
Na-24	1.3×10^6	--	7.5×10^6	--	--
Cr-51	2.5×10^4	--	7.5×10^5	3.0×10^4	7.5×10^3
Mn-54	6.3×10^5	--	1.5×10^7	--	--
Fe-59	2.5×10^6	3.0×10^6	3.0×10^7	--	--
Co-58	1.3×10^6	--	1.7×10^7	--	2.1×10^5
Co-60	5.0×10^6	--	5.0×10^7	--	5.0×10^5
Sr-89	7.1×10^6	1.7×10^8	5.0×10^7	--	--
41 Sr-90	1.3×10^9	1.7×10^9	3.8×10^7	--	--
Y-89m	NA	--	--	--	--
Y-90	1.7×10^2	7.5×10^3	7.5×10^7	--	--
Y-91	2.5×10^3	1.0×10^5	5.0×10^7	--	--
Zr-95	5.0×10^3	1.5×10^4	2.5×10^7	--	7.5×10^3
Nb-95	1.3×10^3	4.3×10^3	1.5×10^7	--	2.5×10^3
Mo-99	6.3×10^5	--	3.8×10^7	--	7.5×10^6
Ru-103	6.3×10^4	1.5×10^5	1.9×10^7	--	5.0×10^5
Ru-106	2.5×10^5	3.0×10^6	1.5×10^8	--	3.8×10^6
Rh-106	NA	--	--	--	--
Ag-111	1.0×10^4	5.0×10^4	3.8×10^7	--	7.5×10^4

TABLE 11.2A-3 (Continued)

Isotope	Whole Body	Bone	GI Tract**	Thyroid (adult)	Kidney
Sb-125	2.5×10^5	1.5×10^6	1.5×10^7	1.5×10^3	--
Te-129	1.0×10^4	3.0×10^4	1.9×10^6	3.0×10^4	1.5×10^5
Te-129m	2.5×10^6	1.0×10^7	7.5×10^7	3.8×10^6	3.8×10^7
Te-132	1.0×10^6	1.5×10^6	7.5×10^7	1.5×10^6	7.5×10^6
I-131	2.5×10^6	--	1.5×10^6	1.5×10^9	--
I-132	1.3×10^5	--	3.8×10^6	5.0×10^7	--
Cs-134	5.6×10^7	4.3×10^7	3.0×10^6	--	3.8×10^7
Cs-136	5.6×10^6	3.0×10^6	1.9×10^6	--	5.0×10^6
Cs-137	2.5×10^7	6.0×10^7	1.9×10^6	--	3.0×10^7
Ba-140	1.0×10^6	1.5×10^7	7.5×10^7	--	5.0×10^3
La-140	2.5×10^2	1.5×10^3	7.5×10^7	--	--
Ce-141	5.0×10^2	6.0×10^3	1.7×10^7	--	2.1×10^3
Ce-144	1.7×10^4	3.8×10^5	1.5×10^8	--	7.5×10^4
Pr-143	5.0×10^2	7.5×10^3	3.0×10^7	--	1.7×10^3
Pr-144	NA	--	--	--	--
Nd-147	5.0×10^2	5.0×10^3	2.5×10^7	--	3.0×10^3
Pm-147	2.5×10^3	6.0×10^4	7.5×10^6	--	7.5×10^3
Eu-155	5.0×10^3	3.8×10^4	7.5×10^6	--	2.1×10^4
Ta-182	7.1×10^3	1.5×10^4	3.8×10^7	--	2.1×10^4
Pu-238	1.3×10^7	6.0×10^8	5.0×10^7	--	5.0×10^7

TABLE 11.2A-3 (Continued)

Isotope	Whole Body	Bone	GI Tract**	Thyroid (adult)	Kidney
Pu-239	1.7×10^7	6.0×10^8	5.0×10^7	--	7.5×10^7
Pu-240	1.7×10^7	6.0×10^8	5.0×10^7	--	7.5×10^7
Pu-241	2.5×10^5	1.5×10^7	1.5×10^6	--	1.5×10^6
Pu-242	1.3×10^7	6.0×10^8	5.0×10^7	--	5.0×10^7

*Calculated from data tabulated in Table 11.2A-6 maximum permissible dose ÷ maximum permissible concentration in water, $\left(\frac{MPD}{MPC_w}\right)$.

**MPC for insoluble compounds used for all elements except I_2, Cs and Na. CRBRP releases of I_2, Cs and Na will be in soluble form only.

NA - Not available.

TABLE 11.2A-4

BIOACCUMULATION FACTORS FOR FRESHWATER AQUATIC FOODS (REF. 1)

Isotope	Fish	Crustacea-Mollusks	Algae	Plants*
H-3	1	1	1	1
Na-22	100	200	500	50
Na-24	100	200	500	50
Ne-23	NA	NA	NA	NA
Ar-39	1	1	1	1
Ar-41	1	1	1	1
Cr-51	20	2,000	4,000	400
Mn-54	400	90,000	10,000	1,000
Fe-59	100	3,200	1,000	100
Co-58	50	200	200	20
Co-60	50	200	200	20
Kr-83m	1	1	1	1
Kr-85	1	1	1	1
Kr-85m	1	1	1	1
Kr-87	1	1	1	1
Kr-88	1	1	1	1
Sr-89	30	100	500	50
Sr-90	30	100	500	50
Y-89m	25	1,000	5,000	500
Y-90	25	1,000	5,000	500
Y-91	25	1,000	5,000	500
Zr-95	330	7	1,000	100
Nb-95	30,000	100	800	80
Mo-99	10	10	1,000	100
Ru-103	10	300	2,000	200
Ru-106	10	300	2,000	200
Rh-106	10	300	200	20
Ag-111	2	770	200	20
Sb-125	1	10	1,500	150
Te-129	400	75	100	10
Te-129m	400	75	100	10
Te-132	400	75	100	10
I-131	15	5	40	4
I-132	15	5	40	4
Xe-131m	1	1	1	1
Xe-133	1	1	1	1
Xe-133m	1	1	1	1
Xe-135	1	1	1	1
Xe-135m	1	1	1	1
Xe-138	1	1	1	1
Cs-134	2,000	100	500	50
Cs-136	2,000	100	500	50
Cs-137	2,000	100	500	50

TABLE 11.2A-4 (Continued)

Isotope	Fish	Crustacea-Mollusks	Algae	Plants*
Ba-140	4	200	500	50
La-140	25	1,000	5,000	500
Ce-141	1	1,000	4,000	400
Ce-144	1	1,000	4,000	400
Pr-143	25	1,000	5,000	500
Pr-144	25	1,000	5,000	500
Nd-147	25	1,000	5,000	500
Pm-147	25	1,000	5,000	500
Eu-155	25	1,000	5,000	500
Ta-182	NA	NA	NA	NA
Pu-238	4	100	350	35
Pu-239	4	100	350	35
Pu-240	4	100	350	35
Pu-241	4	100	350	35
Pu-242	4	100	350	35

*Plants are assumed to contain 1/10 as much radioactivity as would be predicted using bioaccumulation factors for algae.

TABLE 11.2A-5

SUMMARY OF VARIABLES USED IN RADIOLOGICAL DOSE EVALUATIONS WHICH ARE NOT SPECIFIC TO THE CRBRP

Exposure Via Above-Water Activities		
TI	Time spent immersed in effluent water	100 hr/yr (Ref. 1)
TAW	Time spent in above water activities	Boating - 100 hr/yr (Ref. 1)
		Shoreline activities 500 hr/yr (Ref. 1)

TABLE 11.2A-6

MAXIMUM PERMISSIBLE CONCENTRATION IN WATER, MPC_W, FOR CONTINUOUS EXPOSURE TO RADIONUCLIDES RELEASED FROM THE CRBRP RADWASTE SYSTEMS (REF. 2)

μCi/cc

Isotope	Whole Body	Bone	GI Tract**	Thyroid (adult)	Kidney
H-3	5×10^{-2}	--	--	--	--
Na-22	$4 \times 10^{-4+}$	--	3×10^{-3}	--	--
Na-24	4×10^{-3}	--	$2 \times 10^{-3+}$	--	--
Cr-51	2×10^{-1}	--	$2 \times 10^{-2+}$	1×10^{0}	2×10^{0}
Mn-54	8×10^{-3}	--	$1 \times 10^{-3+}$	--	--
Fe-59	2×10^{-3}	1×10^{-2}	$5 \times 10^{-4+}$	--	--
Co-58	4×10^{-3}	--	$9 \times 10^{-4+}$	--	7×10^{-2}
Co-60	1×10^{-3}	--	$3 \times 10^{-4+}$	--	7×10^{-2}
Sr-89	7×10^{-4}	$1.8 \times 10^{-4++}$	$3 \times 10^{-4+}$	--	3×10^{-2}
41 Sr-90	4×10^{-6}	$1.8 \times 10^{-5++}$	4×10^{-4}	--	--
Y-89m	NA	--	--	--	--
Y-90	3×10^{1}	4×10^{0}	$2 \times 10^{-4+}$	--	--
Y-91	2×10^{0}	3×10^{-1}	$3 \times 10^{-4+}$	--	--
Zr-95	1×10^{0}	2×10^{0}	$6 \times 10^{-4+}$	--	2×10^{0}
Nb-95	4×10^{0}	7×10^{0}	$1 \times 10^{-3+}$	--	6×10^{0}
Mo-99	8×10^{-3}	--	$4 \times 10^{-4+}$	--	$2 \times 10^{-3+}$
Ru-103	8×10^{-2}	2×10^{-1}	$8 \times 10^{-4+}$	--	3×10^{-2}
Ru-106	2×10^{-2}	1×10^{-2}	$1 \times 10^{-4+}$	--	4×10^{-3}

TABLE 11.2A-6 (Continued)

Isotope	Whole Body	Bone	GI Tract**	Thyroid (adult)	Kidney
Rh-106	NA	--	--	--	--
Ag-111	5×10^{-1}	6×10^{-1}	$4 \times 10^{-4+}$	--	2×10^{-1}
Sb-125	2×10^{-2}	2×10^{-2}	$2 \times 10^{-3+}$	2×10^{1}	--
Te-129	5×10^{-1}	1×10^{0}	$8 \times 10^{-3+}$	1×10^{0}	1×10^{-1}
Te-129m	2×10^{-3}	3×10^{-3}	$2 \times 10^{-4+}$	8×10^{-3}	4×10^{-4}
Te-132	5×10^{-3}	2×10^{-2}	$2 \times 10^{-4+}$	2×10^{-2}	2×10^{-3}
I-131	2×10^{-3}	--	1×10^{-2}	$2 \times 10^{-5\nabla}$	--
I-132	4×10^{-2}	--	4×10^{-3}	$6 \times 10^{-4\nabla}$	--
Cs-134	$9 \times 10^{-5+}$	7×10^{-4}	5×10^{-3}	--	4×10^{-4}
Cs-136	$9 \times 10^{-4+}$	1×10^{-2}	8×10^{-3}	--	3×10^{-3}
Cs-137	$2 \times 10^{-4+}$	5×10^{-4}	8×10^{-3}	--	5×10^{-4}
Ba-140	5×10^{-3}	2×10^{-3}	$2 \times 10^{-4+}$	--	3×10^{0}
La-140	2×10^{1}	2×10^{1}	$2 \times 10^{-4+}$	--	--
Ce-141	1×10^{1}	5×10^{0}	$9 \times 10^{-4+}$	--	7×10^{0}
Ce-144	3×10^{-1}	8×10^{-2}	$1 \times 10^{-4+}$	--	2×10^{-1}
Pr-143	1×10^{1}	4×10^{0}	$5 \times 10^{-4+}$	--	9×10^{0}
Pr-144	NA	--	--	--	--
Nd-147	1×10^{1}	6×10^{0}	$6 \times 10^{-4+}$	--	5×10^{0}
Pm-147	2×10^{0}	5×10^{-1}	$2 \times 10^{-3+}$	--	2×10^{0}
Eu-155	1×10^{0}	8×10^{-1}	$2 \times 10^{-3+}$	--	7×10^{-1}
Ta-182	7×10^{-1}	2×10^{0}	$4 \times 10^{-4+}$	--	7×10^{-1}

TABLE 11.2A-6 (Continued)

Isotope	Whole Body	Bone	GI Tract**	Thyroid (adult)	Kidney
Pu-238	4×10^{-4}	5×10^{-5}+	3×10^{-4}	--	3×10^{-4}
Pu-239	3×10^{-4}	5×10^{-5}+	3×10^{-4}	--	2×10^{-4}
Pu-240	3×10^{-4}	5×10^{-5}+	3×10^{-4}	--	2×10^{-4}
Pu-241	2×10^{-2}	2×10^{-3}+	1×10^{-2}	--	1×10^{-2}
Pu-242	4×10^{-4}	5×10^{-5}+	3×10^{-4}	--	3×10^{-4}

*MPC_W for soluble compounds.
**MPC for insoluble compounds used for all elements except I_2, Cs and Na. CRBRP releases of I_2, Cs and Na will be in soluble form only.
+MPC_W in 10CFR20, Table II, column 2 is based upon a maximum permissible dose 1/10 of the occupational exposure levels reported in ICRP-2 (Ref. 2).
▽MPC_W presented in 10CFR20, Table II, column 2 is based upon a maximum permissible dose of 1,500 mrem to a child thyroid. MPC_W in above table is from ICRP-2.
NA - Not available.
++Calculated from data presented in Statement on the Selection of as Low as Practicable Design Objectives and Technical Specifications for the Operation of Light-Water Cooled Power Reactors, in Testimony of C. C. Gamertsfelder from Hearings, DOCKET RM50-2, Washington, D. C., 1972.

11.3 GASEOUS WASTE SYSTEM

11.3.1 Design Base

The design objective of the Gaseous Waste System is that the levels of radioactive materials in the plant effluents to the environment shall be kept as low as reasonably achievable. Extensive efforts shall be directed toward the development of system designs that will result in minimizing or eliminating planned releases of radioactive material to the environment during normal plant operation. Plant design objectives include conformance with the requirements of 10 CFR 20.

The design base and the expected values of the annual activity release for each gaseous radionuclide are listed in Tables 11.3-11 and 11.3-12, respectively. The summed annual dose at the site boundary from gaseous radioactive effluent for the design base conditions is approximately 7.1 mrem total skin dose (which includes both γ and β), and 2.1 mrem whole body gamma dose (see Table 11.3-18). The doses are based on a plant capacity factor of 1.0 except for tritium exhausted from the T-G building which is based on a plant capacity factor of 0.68. This annual dose is well below the requirements of 10 CFR 20 for unrestricted areas. Dose rates within accessible restricted areas are below the requirements of 10 CFR 20.

The Radioactive Argon Processing Subsystem (RAPS) shall maintain the primary sodium system cover gas at an acceptable level of radioactivity and shall provide a source of low-radioactivity gas for use in reactor seals and cover gas pressure control. The cover gas is to be contained within the RAPS circuit during its radioactive decontamination and reuse, except for leakages and cover gas samples taken for failed-fuel and impurity monitoring.

The Cell Atmosphere Processing Subsystem (CAPS) shall process plant effluents that contain or might potentially contain radioactivity, in order to reduce the radioactivity to levels that are as low as reasonably achievable during the normal range of routine plant operations. During off-normal operations, the CAPS function is to continue to prevent, to as great an extent as is practicable, the release of radioactivity.

11.3.2 System Description

11.3.2.1 Process Flow

The origin, flow paths, and release points of the gaseous radioactive waste system are shown schematically in Figure 11.3-1. The radioactive gases generated in the reactor (see Sections 11.3.2.2 and 11.3.2.3 for composition, flow rates, and concentrations) consist of tritium and noble gas isotopes. The latter, and some of the tritium, migrate to the reactor and Primary Heat Transport System (PHTS) cover-gas spaces. The Radioactive Argon Processing Subsystem is an essentially closed internal system which continuously processes the cover gas to reduce its activity and then returns the "recycle" argon to the seals and cover-gas spaces. An expanded schematic diagram of the RAPS is shown in Figure 11.3-2.

No significant quantities of iodine nor particulate forms of radioactive isotopes, excluding those daughter products associated with noble gas decay, are expected to be present in the Gaseous Radwaste System. Although some vaporization of nongaseous isotopes from the liquid sodium into the reactor cover gas may occur, all cover gas entering the system is processed through two vapor traps, which are expected to remove essentially all nongaseous isotopes, including trace quantities of sodium iodide. Continuous radiation monitoring of the gases is provided by the process monitoring of RAPS and CAPS and monitoring of the CAPS exhaust.

Radioactive gas leakages into the inerted cells of the Reactor Containment Building (RCB), and Reactor Service Building (RSB) are normally collected and processed through the CAPS and the RSB H&V systems, respectively, before release to the environment. An expanded schematic diagram of the CAPS is shown in Figure 11.3-3.

Most (99.8%) of the tritium generated forms a hydride in the sodium; it is then partially removed from solution in the sodium by cold trapping. A very small portion diffuses into the cells of the Intermediate Bay of the Steam Generator Building. A detailed description of all the identifiable leakage and discharge paths is given in the following paragraph.

In Figure 11.3-1, certain paths have been assigned "numbers" that correspond with the following discussion:

Path 1a. Reactor cover gas is conservatively estimated to diffuse through the reactor head seals at the rate of 0.0044 scc/min. This leakage diffuses into the head access area and is discharged to the atmosphere through the RCB heating and ventilating exhaust duct.

Path 1b. The buffered head seals are expected to leak (to the head access area) a maximum of 7 scc/min of recycle argon cover gas.

Path 2. Although the cover gas lines connected to the reactor and other components in the Primary Heat Transport System are not expected to leak, a leakage of 1 scc/min has been assumed, for the purpose of conservatism, in the design basis evaluation. Also, tritium dissolved in the sodium in this system will diffuse through the hot pipe walls into the RCB cells. These two leakages are considered to diffuse into the RCB cell atmospheres, which are collected and processed by CAPS and are discharged to the CAPS heating and ventilation exhaust.

Path 3. Although the RAPS and CAPS piping and components are also not expected to leak significantly, a leakage equivalent to 1 scc/min of RAPS Cold Box influent gas has been assumed, for the purposes of conservatism, in the design basis evaluation. This assumed leakage diffuses into the RAPS RCB cell atmospheres, and is ultimately discharged to the atmosphere through the RCB heating and ventilating exhaust duct.

Path 4. Ar^{39} and Kr^{85} collected and stored in RAPS (see further below) are bled into CAPS; these also are discharged to the CAPS heating and ventilation exhaust.

Path 5. The Failed Fuel Monitoring System discharges reactor cover gas samples to CAPS. After processing, this gas also is discharged to the CAPS heating and ventilation exhaust.

Path 6. Other plant systems, specifically Refueling, Impurity Monitoring, Maintenance and Auxiliary Liquid Metal, intermittently discharge radioactive or potentially radioactive gases through CAPS to the CAPS heating and ventilation exhaust.

Path 7. Tritium dissolved in the sodium of the PHTS will transfer to the Intermediate Heat Transport System (IHTS) sodium by diffusing through the intermediate heat exchanger (IHX) tube walls. A very small but finite amount will then diffuse through the hot leg piping in the cells of the intermediate bay (IB) and steam generator bay of the Steam Generator Building and will mix with the ventilation streams in that building.

Radioactive gases are thus released to the Heating and Ventilation Systems of the IB, the RCB, and the RSB (Paths 7, 8, and 9 on Figure 11.3-1). The discharge of these streams to the environment is discussed in Section 11.3.2.6.

Balance of Plant (BOP) tritium release (Path 10, Figure 11.3-1) is discussed in Section 11.3.6.2.

A schematic diagram of the process flow in the cover-gas recycle system, which includes the reactor, the overflow vessel, and the PHTS pump cover-gas spaces, the oil traps for the pumps, the Failed Fuel Monitoring System, the recycle argon vessels, and RAPS equipment, is shown in Figure 11.3-2. The recycle system components, distinguished by solid-line blocks, constitute the collection, control, and principal processing portion of the system, although isotope decay occurs in all parts of the system. The function of this system is to continuously draw radioactive gases from the cover-gas spaces, so that noble gas isotopes, both stable and radioactive, are extracted from the cover-gas spaces by condensation in a cryostill, and then to return the purified argon to the cover-gas spaces as a "recycle" argon purge. The activity in the cover gas is thus dependent on the production rate in the reactor, the purge rate, the holdup time, the half-life of each isotope, and the cryostill efficiency, and gas removal rates mainly due to periodic draining of the cryostill to the noble gas storage vessel.

Argon flows from the recycle vessels nominally at 5.15 scfm: 0.5 scfm to each of the PHTS pumps and 3.65 scfm to the reactor cover gas space. The PHTS pumps gas effluent is divided equally (by design), so that 0.75 scfm (total) passes through the three shaft seal spaces and the three oil traps and enters the RAPS input (vacuum vessel); the other 0.75 scfm bleeds to the common pressure-equalization line that joins the reactor, the reactor overflow

vessel, and the PHTS pumps' cover gas spaces. From this pressure-equalization line, 1.0 scfm of the gas passes through a sodium vapor trap and through the Failed Fuel Monitoring System before entering the RAPS input; the remaining 3.4 scfm goes through the overflow vessel cover gas space, then through a sodium vapor trap to RAPS.

RAPS continuously processes a flow of 10.0 scfm which is made up of the 5.15 scfm input and 4.85 scfm of recirculated throughput. The output of RAPS, 5.15 scfm, is delivered to the recycle argon vessels. The RAPS cryogenic distillation column operates with liquid argon as the still bottom. This liquid absorbs the krypton and xenon isotopes and permits their separation by draining, evaporating, and transferring them to the noble gas storage vessel. The transfer to the noble gas storage vessel is to be an annual procedure. During the subsequent year, the transferred gas will be bled at a controlled, low rate from the noble gas storage vessel into CAPS, and through CAPS to the RSB H&V exhaust. The release process will occur over a period of several months.

The Cell Atmosphere Processing Subsystem process flow circuit is shown in detail in Figure 11.3-3. The individual inputs to CAPS, grouped as shown in the five upper boxes in the diagram, are as follows:

1) Cells and Pipeways - During normal operation, there will be a small but finite diffusion and leakage of radioactive gases through the piping and components. This source of activity will be accumulated in the atmospheres of respective RCB and RSB cells and when the cells are purged to CAPS, the contained radioactivity will be collected and processed in CAPS. It is conservatively assumed for calculational purposes that an average 1 scc/min of reactor cover gas will be leaked into the cells; further, they will be exhausted to CAPS without delay, except that Ne23 is assigned a delay of 8 minutes. The RSB inerted cell atmosphere will divert from HVAC to CAPS for processing when any activity concentrations exceed a predetermined setpoint value. For RCB cells, normal cell-atmosphere nitrogen passes directly to CAPS.

2) Failed Fuel Monitoring System - This equipment periodically samples reactor cover gas and discharges portions of the samples into CAPS.

3) Gas Services Exhausts - Intermittently, CAPS will receive exhausted nitrogen, argon, or air from vessel cover gases, cooling gases, cleaning, bagging, and fuel handling operation, and other services.

4) RAPS Cold Box - These CAPS inputs potentially include purge of the RAPS cold box for component maintenance, RAPS cold box effluent diversion, and RAPS noble gas bleed from the noble gas storage vessel. The noble gas bleed is normally continuous; the others will be used only in case of a malfunction in the RAPS circuit, and only for short periods of time, as for a repair or correction. With the exception of the noble gas bleed, these sources will not normally contribute a significant amount of radioactivity relative to sources (1), (2), and (3).

The nominal volume input of gases to CAPS is the time-averaged sum of the inputs listed which is 38 scfm.

A recirculation loop, shown by a broken-line in Figure 11.3-3, will return the CAPS output to the vacuum vessel if radioactivity above an acceptable level is detected by the radiation monitoring system. Also, if the effluent radioactivity is high, the CAPS compressors will be shut down.

The tritium-water and alcohol removal process uses an oxidizer and a freeze-out dryer; it oxidizes tritium, collects tritiated water and alcohol and passes them to the Radioactive Liquid Waste System, where they are prepared for off-site disposal.

The decontamination of rad-waste gas is performed in two cryogenically-cooled charcoal delay beds. In the beds, the short-lived gaseous radioactive species are adsorbed and then decay; they are thus removed from the process gas stream.

RAPS and CAPS have different process methods, i.e., the distillation-process removal of noble gases in RAPS rather than the delay beds and the oxidation-process removal of tritium in CAPS. In each subsystem, however, the input is collected in a vacuum vessel, from which it is transferred to a surge vessel. It is then treated in the respective cold box. The recirculation-loop feature in RAPS permits maintaining a steady throughput under conditions of changing output demand requirements.

11.3.2.2 Gaseous Radioactive Waste Inputs to System

The radioactive waste gases consist of noble gas radionuclides and tritium that are generated by fission and/or neutron activation. The noble gas radionuclides migrate to the reactor cover-gas space, although a time lag occurs in the leakage from ruptured fuel and in the movement to the cover gas. The tritium remains primarily in the sodium, from which it is removed by cold trapping. The tritium concentration in the cover gas will be affected by the sodium temperature, the cover gas temperature and pressure, the cold trapping efficiency, and the concentration of hydrogen in the sodium. The latter factor, in turn, depends on the diffusion rate of hydrogen from the steam-generator tubes into the intermediate sodium and the subsequent diffusion of the hydrogen into the primary sodium system through the IHX tube walls.

Table 11.3-1 lists the radionuclides of concern, their half-lives, decay constants, and design base input rates to the cover-gas space at normal reactor power level (975 MWt). The noble gas input rates to the cover gas are adjusted for decay during their release from failed fuel (modeling described in Section 11.1). The assumed condition of 1% failed fuel is the design base point for RAPS.

11.3.2.3 Activity Inventories and Concentrations

a. Reactor Cover-Gas Space - The steady-state inventory of a specific radionuclide in the bulk volume of the reactor cover gas can be calculated from the following formula:

$$I = \frac{\dot{I}\Sigma}{\lambda + F/V} \qquad \ldots(1)$$

Where, I = inventory (Ci), $\dot{I}$ = input rate (Ci/min), λ = decay constant (min^{-1}) (0.693 ÷ half-life), Σ = processing efficiency factor (typically taken as unity), F = purge rate (3.65 scfm), and V = cover-gas-space volume (410 scf). F/V is the "purge factor". The concentration of a radionuclide in the cover-gas space is its inventory divided by the total gas volume adjusted to standard conditions (68°F, 14.7 psia).

Table 11.3-2 lists, for each isotope of concern, the inventory concentration in the reactor cover gas for the design-base condition of 1% failed fuel.

b. RAPS Process Stream - Table 11.3-3 lists the inventories in the principal RAPS vessels, and Table 11.3-4 lists the concentrations of activity at selected points in the RAPS process stream. The values listed under "design" correspond to the design base condition of 1% failed fuel. The values listed under "expected" correspond to operation with 0.1% failed fuel. The effective decontamination factors of the RAPS cryostill are given in Table 11.3-5.

c. CAPS Process Stream - Tables 11.3-6 and 11.3-7 list, respectively, the isotope inventories and concentrations of activity at selected points in the CAPS process stream. The effective decontamination factors of CAPS are given in Table 11.3-8.

For all tables in Secton 11.3 involving the CAPS inputs, CAPS processes, and radioactive releases through CAPS, the terms "Design" and "Expected" are further defined and limited as follows:

"Design": The CAPS input activities correspond to the design base condition of reactor operation with 1% failed fuel (350 failed fuel pins), after one year; in addition, the Failed Fuel Monitoring System input corresponds to operation with 0.17% failed fuel (60 failed fuel pins) and, eight samples per day being processed. (The Failed Fuel Monitoring System is not required to operate when there are more than 60 failed fuel pins.) The Reactor Refueling System inputs are the sum of those for normal and anticipated events.

"Expected": The CAPS input activities correspond to the expected condition of reactor operation with 0.1% failed fuel, (35 failed fuel pins) after one year; the Failed Fuel Monitoring input also corresponds to 0.1% failed fuel with two samples per day being processed. The reactor refueling system inputs are the sum of those for normal and anticipated events. Both the design and expected CAPS inputs used in Section 11.3 are the yearly averages. This is more conservative than using 30 year averages since some inputs included in the yearly average have an actual frequency which is less than once per year, and no adjustment is made for the lower frequency. The yearly averages are used to calculate the annual site boundary doses since the CAPS decontamination factors listed in Table 11.3-8 are not significantly sensitive to design and expected input rate fluctations. However, it is not appropriate to use them to calculate the CAPS inventories for accidents. Those inventories should be based on short term maximum inputs not yearly averages. Therefore, the CAPS average inventories listed in Section 11.3 are not identical to those in Section 15. The inventories for shielding requirements are the same as those described above for the "Design" condition except the Failed Fuel Monitoring System input corresponds to 1.0% failed fuel. The accident source terms and the shielding source terms are different for the CAPS cold box accident in order to be most conservative for each application.

11.3.2.4 Release Path Calculations

The various release paths listed in Section 11.3.2.1, Paths 1 through 10, and shown in Figure 11.3-1, were evaluated to obtain the activity release rates, as follows:

Path 1a. Reactor Cover Gas Leakage - The leakage of 0.0044 scc/min was multiplied by the data in Table 11.3-2 ("Concentration" column) and was converted to give daily leakage. Decay during transit through seals was not considered, except for Ne^{23} (5 minute delay).

Path 1b. Buffered Head Seals Leakage - The leakage of 7 scc/min from the seals was multiplied by the data in Table 11.3-4 ("Recycle Argon Vessels Effluent" column) and was converted to give daily leakage.

Path 2. Primary Piping Leakage - The leakage of 1 scc/min of reactor cover gas from the equalization line and hot primary gas piping was multiplied by the data in Table 11.3-2 ("Concentration" column) and was divided by the CAPS decontamination factors (Table 11.3-8). Diffusion of tritium is also included.

Path 3. RAPS Cold Box Component Leakage - The leakage of 1 scc/min was multiplied by the data in Table 11.3-4 ("RAPS Surge Vessel Effluent" column) and was converted to give daily leakage.

Path 4. RAPS Noble Gas Bleed to CAPS - Based on a bleed period of one year, an average daily radioactivity release rate to CAPS was calculated for the Kr^{85}, Ar^{39}, and tritium. The Kr^{85} and Ar^{39} pass through CAPS with no attenuation. The three long-lived isotopes are the only ones present since all of the isotopes are held until the short-lived isotopes are essentially gone.

Path 5. Impurity and Failed Fuel Monitoring - These contributions to the CAPS input were divided by the CAPS decontamination factors (Table 11.3-8).

Path 6. Gas Services Exhaust - For each of the four interfacing plant systems, the respective radioactive isotopic inputs to CAPS were divided by the CAPS decontamination factors (Table 11.3-8).

Path 7. Intermediate Bay Cells Leakage - The diffusion of tritium is calculated from an analysis, as indicated in Section 11.3.2.1, involving the evaluation of both tritium and hydrogen fluxes in the Primary and Intermediate Sodium Systems, and using appropriate assumptions of cold-trapping efficiency, and the hydrogen-tritium permeability of components and piping.

Path 8. RCB H&V Exhaust - The sum of Paths 1a, 1b, and 3.

Path 9. CAPS H&V Exhaust - The sum of Paths 2, 4, 5, and 6.

Path 10. T-G Building H&V Exhaust - BOP tritium release is discussed in Section 11.3.6.2.

11.3.2.5 Activity Release Tabulations

Tables 11.3-9 and 11.3-10 tabulate for each radionuclide the design and expected daily releases, respectively; the first six data columns represent Release Paths 1a, 1b, and 2 through 5 in the order given in Section 11.3.2.4; the next four columns represent Path 6; and the following column represents Path 7.

Table 11.3-11 gives annual releases for the design service condition. The first three data columns correspond to Release Paths 8, 9, and 7, in that order; the last column gives the total plant release through the H&V system. Table 11.3-12 gives the annual releases for the expected service condition.

11.3.2.6 Radioactive Gaseous Site Boundary and Restricted Area Concentrations

Radioactive gaseous concentrations in the head access area, and at site boundary (based on the annual average χ/Q) have been calculated when applicable for the following sources; these are compared to 10 CFR 20 unrestricted area MPC limits. The sources are:

a. The radioisotope leakages to the head access area given in Section 11.3.2.1, Paths 1a and 1b. The calculated head access area concentrations and MPC comparisons are shown in Table 11.3-13.

b. The main RCB H&V radioisotope exhaust rates given in column 1 of Tables 11.3-11, and -12. The radioisotopes are discharged through release point #5a of Table 11.3-20. The calculated site boundary concentrations and MPC comparisons are shown in Table 11.3-15.

c. The RSB H&V radioisotope exhaust rates given in column 2 of Tables 11.3-11, and -12. The radioisotopes are discharged through release point #21 of Table 11.3-20. Site boundary concentrations and MPC comparisons are shown in Table 11.3-14.

d. The intermediate bay tritium leakage rate given in Tables 11.3-11, or -12. The tritium is discharged through release point #1 of Table 11.3-20. the site boundary concentration and the MCP comparison are shown in Table 11.3-16a.

e. The BOP tritium release rate quoted at the bottom of Table 11.3-11, or -12. The tritium is discharged through release point #7 of Table 11.3-20. The site boundary concentration and the MPC comparison are shown in Table 11.3-16.

The two restricted-area locations that present potential occupational exposure to airborne radionuclides are the IHTS piping cells and the head access area. The estimated leakage of tritium into the IHTS piping cells is 1.6×10^{-4} This is diluted in 1000 cfm of ventilating air, resulting in an expected concentration of 3.9×10^{-9} $\mu Ci/cm^3$ less than 0.1% of the MPC (occupational) concentration of 5×10^{-6} $\mu Ci/cm^3$.

The normally accessible area with the largest potential atmospheric radionuclide concentrations is the head access area (HAA). As shown in Table 11.3-13, the concentrations in this region for operation with 1% failed fuel will be approximately 1.3×10^{-7} $\mu Ci/cm^3$, which results in a sum of the fractional MPC's (occupational) of 0.05. Also shown on Table 11.3-13 are the expected concentrations for operation with 0.1% failed fuel, which results in a sum of the fractional MPC (occupational) value of 0.007.

Particulates are not expected to be discharged from the design release points of the CRBRP. However, as discussed in Section 11.4, monitors will be provided, as appropriate, to ensure the capability of detection.

11.3.3 System Design

11.3.3.1 General

59 The RAPS and CAPS System designs emphasize all-welded construction, wherever practicable, and bellows-sealed process valves throughout, so that leak-tightness is enhanced. There will be no field-routed piping in either system.

11.3.3.2 Equipment

RAPS and CAPS flow diagrams are shown in Figures 11.3-4 through 11.3-7. The design parameters of the major equipment components shown in the diagrams are listed in Table 11.3-17; this table summarizes the design codes, the seismic categories, the operating pressures and temperatures, the actual volumes of
59 the components, and their capacities under normal operating conditions. These components are all located within the RCB and RSB, which are Seismic Category I structures, and are tornado-protected by the building. Consequences of equipment failures by rupture of leakage are discussed in Section 15.7.

11.3.3.3 Instrumentation

Process instrumentation is to be installed in RAPS, CAPS, and the inert gas distribution systems in order to effect the control, generally in the automatic mode, of pressures, temperatures, radioactivity concentrations, and flow rates (see Section 9.5.5). RAPS and CAOS process and instrumentation diagrams are shown in Figures 11.3-10 through 11.3-13. The normal pressures and temperatures for the vessels are listed in Table 11.3-17. Radioactivity concentrations and flow rates have been discussed in previous sections of Section 11.3.

Radiation monitoring for the nitrogen-inerted cells in the RCB and RSB is provided by two separate multi-channel sampling and analysis units, typically piped as shown in Figure 11.3-8. The individual cell atmospheres are continuously withdrawn but are sequentially subjected to analysis for detection of radioactivity, water vapor, and oxygen. Detection of oxygen concentration in excess of the high set point will automatically initiate purging of the violated cell with fresh nitrogen to reduce the concentration to the low set point. Initiation for automatic purging to reduce water vapor concentration rather than oxygen is an operator option, selectable by a hand switch. Detection of radioactivity in the cell atmosphere automatically directs the cell effluent to vent to CAPS if the radioactivity is above the set point; otherwise, it is vented to HVAC for direct release. This option is provided for all the inerted cells in the RSB, but not for the inerted cells in the RCB. The effluents from the RCB cells are always vented to CAPS during normal plant operation.

Two radiation monitors in series are provided in a common RSB inerted-cell-vent header before the cell gases are discharged into the HVAC ducting. This provides continuous monitoring of the vented gases, and a high-radiation signal provides automatic closure of a common header-isolation valve located downstream of the radiation monitor. The signal also closes all the HVAC vent valves to the individual loop cells, to prevent release of radioactive gases.

The question of whether or not available RSB radiation-monitoring equipment provides adequate discrimination to guard against excessive releases, is addressed in the following sample calculation:

> If a 100,000 ft^3 cell is at, but not above, the threshold of radioactivity detection (1 E-6 $\mu Ci/cm^3$) and is then purged within one day to correct its oxygen concentration, the purge flow will enter the H&V effluent duct. Under these conditions, a nominal (1 E+5 ft^3) (2.832 E+4 cm^3/ft^3) (1 E-6 or 0.0028 Ci, will be in the cell. In the worst case, all of it (0.0028 Ci/day) could be released in the H&V effluent. This is only 0.16% of the normally expected daily plant release rate.

11.3.4 Operating Procedures and Performance Tests

The gas inputs to CAPS (listed in Section 11.3.2.1) are drawn into a vacuum tank by one or more of four 25-scfm compressors, depending on input flow rate, which are instrumented to automatically maintain a 7.7 to 12.7 psia pressure in the tank. The compressors are arranged in parallel and their controls are such that one starts when the vacuum pressure reaches 12.7 psia, and others
59 start in sequence if the pressure is not held below 12.7 psia. The compressors stop when the vacuum reaches 7.7 psia in the vacuum tank. If the

setpoint vacuum pressure exceeds 13.7 psia, a high alarm is triggered. If the temperature of the effluent from the compressors exceeds the high setpoint, indicating inadequate cooling, a high alarm will be triggered to alert the operator to the abnormal condition.

RAPS and CAPS are independently operated, with process control being automatic and with control-room as well as local provisions for overriding automatic
59 controls if conditions so dictate. Both subsystems have control and alarm instrumentation and instant data retrieval available in the control room; this provides the operator with information that ensures proper system operation. The effectiveness of operating procedures has been demonstrated as part of the FFTF development and, to a limited extent, analogous systems used in light-water reactors.

The receiver (surge vessel) of the CAPS compressor(s) normally operates at
59 about 40 psig but can be operated up to 135 psig. The outlet flow from the surge vessel is regulated by a flow control valve. When the surge vessel pressure reaches the nominal 40 psig, the flow valve will permit gas to flow to the processing equipment at a flow rate that increases with surge-vessel
59 pressure differential above 40 psig.

If there is a high gas inflow to the surge vessel and the pressure rises above the nominal setpoint, the outflow from the vessel is increased to accommodate to the increased inflow rate. If the inflow exceeds the maximum processing capability, the surge vessel will act as an accumulator and its pressure can increase to 135 psig, at which pressure the compressors are automatically shut down and a high alarm is triggered. In the event of a compressor diaphragm failure, the failed compressor can be isolated and repairs can be made without shutting down the remainder of CAPS. Similarly, individual radioactive gas filters, upstream of each compressor, can be isolated and replaced when a high pressure-drop alarm is triggered from excessive particulate buildup.

One of two parallel tritium-water removal trains is always on line while the other is being regenerated, with the switchover being automatically controlled by a sequencing timer. In the regeneration cycle, any CO_2 which has been frozen out of the process gas is sublimed off between -20°F and 0°F and is released through the CAPS effluent to H&V. Then, ice formed from tritiated water vapor is melted and, between 40°F and 70°F, it is drained to the CAPS rad-water holding vessel. From this vessel, it is periodically transferred to the Radioactive Waste System by manual actuation of the transfer valve. The
59 waste is then converted to non-compactible solid form for ultimate offsite disposal.

The dried, essentially tritium-free gas from the on-line unit is passed through two charcoal delay beds at cryogenic temperatures; this adsorbs the radioactive xenon and krypton and permits their decay on the beds. The effluent gas from the second bed is normally released to the H&V, but if it contains radioactivity greater than the preset limit, the gas stream is automatically diverted back to the CAPS vacuum vessel, the CAPS compressors are shutdown, and an alarm is sounded. When the radioactivity concentration in the effluent gas is reduced to a value below the preset value, as observed in the effluent gas radiation monitor, the operator may return the three-way valve to its normal position to divert the gases to H&V. The alarm signal must be manually reset.

RAPS is designed to process highly radioactive cover gas from the Primary Sodium System. Under normal operation, RAPS does not discharge gas to the environment. Any unacceptable leakages from RAPS will be detected and the cell in which they originate will be isolated. Action will then be taken to repair the leak. RAPS is divided into an inlet complex and a processing section. The RAPS inlet complex, consisting of a vacuum vessel, filters, and compressors, operates in the same manner and serves the same function as that in CAPS. A cryogenic still is used to remove stable xenons and kryptons, and Kr^{85}, as well as the short-lived noble gas isotopes.

RAPS automatically processes argon reactor cover gas, which, when purified, is normally delivered to the recycle vessels. If the radioactivity level of the RAPS effluent gas exceeds a preset level, an alarm is sounded. This alerts the operator, who then switches RAPS to the cold-box bypass mode of operation. He then drains the cryostill and takes corrective action. After corrective action has been completed, normal flow will be resumed to the recycle argon storage vessels.

The RAPS cryogenic still removes xenon and krypton isotopes by solution in the liquid argon that collects at the bottom of the column. This liquid is periodically drained, evaporated, and transferred as gas to the noble gas storage vessel, from which the gas is bled into CAPS at a controlled rate.

Off-normal operation of the cryogenic still will be detected and an alarm sounded on the basis of off-normal process temperature, pressure, or LN_2 flow. The first operator action would be to attempt to correct the condition by adjusting the out-of-limit parameter. If this could not be accomplished, the RAPS cold box would be bypassed as described above, while the source of the off-normal condition is corrected.

Although under normal conditions RAPS is a closed system, the following are three conditions under which gas may be bled from the circuit: (1) in the event the RAPS system pressure rises above a preset limit, the operator can manually discharge some of the RAPS gas inventory to CAPS as a corrective measure; and (2) prior to required maintenance, the gas inventory in RAPS components can be discharged to CAPS. In all cases, the diverted RAPS gas is taken to CAPS for additional treatment.

Performance tests, to be conducted prior to plant operation, will verify the operability of the system. Selected system performance data are to be recorded during plant operation; these are to be continually reviewed to ascertain that critical components are performing within specifications. In addition, the process gas streams are to be continuously monitored for radioactivity level, in order to provide surveillance of the process system's decontamination effectiveness. The calibrations of all instrumentation sensors, and checkout of alarm circuits and controls, are to be performed during reactor downtime, in order to assure that they are functioning properly. Selected tests are to be repeated during scheduled plant maintenance periods in order to ensure that critical components, such as the delay beds, are performing within specifications.

11.3.5 Estimated Releases

The Cell Atmosphere Processing Subsystem removes fission product gases from nitrogen cell atmospheres, and those air cell atmospheres that normally or potentially contain radioactivity, prior to the discharge of these gases to the environment. The direct discharge of unprocessed radioactive gases to the environment is limited to the radioactive cover gas and buffer-gas leakages through various reactor closure head seals, RAPS and CAPS component leakages, and to the tritium that diffuses through the piping and components in the Intermediate Bay cells which vent directly into the SGB-IB H&V exhaust system. Unprocessed tritium is also released from the T-G building H&V exhaust due to tritium flux to steam.

The RAPS design is based on operation with 1% failed fuel. Normal operation and the expected releases are based on operation with 0.1% failed fuel. The estimated radioactivity release rate from the gaseous waste and the H&V systems after a 1-year period under average operating conditions are shown in Table 11.3-12. The release rates based on the design condition of 1.0% failed fuel are presented in Table 11.3-11.

11.3.6 Release Points

11.3.6.1 Nuclear Island

There are a total of 16 design release points for the Nuclear Island Buildings. The location, height, discharge flow rate, discharge velocity, discharge air temperature, and size and shape of the discharge orifice for each release point are presented in Table 11.3-20.

Ventilation from the Steam Generator Building Intermediate Bay cells is ducted to a single exhaust point located in the Steam Generator Building Intermediate Bay. (Release Point 1 of Figure 11.3-9).

There is a separate exhaust point for each of the Steam Generator Loop cells. Ventilation from each of the three Steam Generator Loop cells is ducted to its respective exhaust point located in the Steam Generator Building Auxiliary Bay (release Points 2, 3, and 4 of Figure 11.3-9). Levels of radioactivity in these areas will make no significant contribution to offsite dose rates.

There are three design release points provided for the RSB/RWB. One design release point exhausts the Radwaste Area. This area involves decontamination of non-volatile isotopes and is not expected to result in the release of activity to the exhaust. However, as described in Section 11.4, monitoring of this release point will be provided. Two release points for the RSB are provided for the exhaust from a) the RCB downstream of the containment isolation valves, and b) the RSB Clean-up Filtration System.

Per Section 11.4, monitors will be provided for these exhausts. The locations of the two RSB exhausts and the Radwaste Area exhaust are Release Points 23, 22, and 6, respectively, on Figure 11.3-9.

Eight (8) release points (points 20A thru 20H in Fig. 11.3-9) are associated with Thermal Margins Beyond Design Basis (TMBDB) design features which receive exhausts from the Annulus Air Cooling System (this system is described in Section 9.6.2). This system is not required to operate during normal operations or to mitigate the consequences of any design basis accidents. Activity would only be released from these points in the event of very low probability accidents beyond the design basis, such as a hypothetical core disruptive accident. If required these exhausts would be initiated no sooner than twenty-four (24) to thirty-six (36) hours after the TMBDB scenario. On line monitoring for particulate, iodine and radiogas will be provided for these exhausts in the event of such an accident.

The Containment Cleanup System/Annulus Pressure Maintenance and Filtration System have a common exhaust (release point 21 in Fig. 11.3-9). During normal operation, the Annulus Pressure Maintenance and Filtration System exhausts thru release point 21 on top of the RCB dome. In the event of very low probability accidents beyond the design basis (TMBDB) the Containment Cleanup System would exhaust thru the same release point, and the Annulus Pressure Maintenance and Filtration System would no longer be in use. Particulates, radioiodines, radiogases, and plutonium are monitored continuously in the effluent stream.

11.3.6.2 Balance of Plant

A small fraction of tritium produced in the fuel and control rods passes into the steam-water system by diffusion through stainless steel in the IHX and through the steam generator tubes. Tritium is expected to be in the steam-water system in the form of tritiated water. The condenser air removal system removes non-condensible gases (vapors) from the condensing steam. Tritiated water vapor, present in the off-gas flow, constitutes the only expected gaseous release contribution from the balance of the plant.

Mechanical vacuum pumps will remove the vapors together with the noncondensible gases and will discharge them to the exhaust plenum of the Turbine Generator Building (which corresponds to release point 7 on Figure 11.3-9). The vapors will mix with the exhaust air. The resulting gaseous tritium release from the TGB is provided in Table 11.3-16.

The Deaerator Exhaust and Steam Packing Exhauster exhaust are independently vented to atmosphere from the Turbine Generator Building (release points 24 and 25 on Figure 11.3-9). The BOP tritium contribution is included in the dose calculations presented in Section 11.3-8. Balance of Plant tritium release is based on the following assumptions: (1) Plant Capacity Factor of 0.68, (2) Vacuum Pump Operating Factor of 0.85, (3) Radioactivity Input to Steam-Water System 0.016 Ci/day, and (4) Condenser off-gas removal 7 scfm. The design value release of tritiated water vapor amounts to 6.3×10^{-5} Ci/day.

Description, design bases, and evaluation of the BOP design are provided in Section 10.

Thirteen other release points associated with the balance of plant could contain some radioactivity. These points are:

1) Plant Service Building (PSB) exhausts from the hot laboratory and
59 decontamination area, identified as Point 19 on Figure 11.3-9. Levels of radioactivity in these areas will make no significant contribution to off-site dose rates.

2) Turbine Generator Building exhausts receiving ventilation exclusively from the Turbine Generator Building atmosphere are identified as Points 7 thru 18 on Figure 11.3-9. Levels of radioactivity in these areas are expected to make no significant contribution to off-site dose rates. However, as per Section 11.4.2.2.3, samples of the TGB atmosphere will periodically be analyzed.

The location, height, discharge flow rate, discharge velocity, discharge air temperature, and size and shape of the discharge orifice, for each BOP release point, are presented in Table 11.3-20.

11.3.7 Dilution Factors

The maximum dose at the site boundary due to normal releases from the gaseous waste system will occur at a point on the boundary that has the highest average annual x/Q as determined from meteorological data. For the CRBRP site, the average annual x/Q for this point is 5.10×10^{-5} s/m^3.

11.3.8 Dose Estimates

The release of radioactive noble gases in the gaseous effluent from the CRBRP during normal operation will create a slightly radioactive plume downwind of
59 the site; this will expose the public located in the downwind direction to small doses of external gamma and beta radiation. An external beta dose to body tissue will be received from the relatively small amount of tritium discharged to the atmosphere. It should be noted that these exposure pathways imply a public completely exposed to the environment, whereas, in reality, most persons spend a significant portion of the lives within structures that reduce the exposure of these types of radiation. The reduction in external dose could range from a factor of two to 1,000 depending on the type of structure and the location of the person within (Ref. 1).

Exposure to tritium in the form of tritiated water vapor (HTO) can occur through several pathways including:

1) Inhalation and skin absorption

2) Ingestion of milk contaminated by the fallout of HTO to the cow's forage and by inhalation by the cow

3) Ingestion of vegetables contaminated by HTO fallout

4) Ingestion of meat (beef) through fallout to forage and inhalation of grazing cattle

5) Ingestion of drinking water contaminated by HTO fallout.

11.3.8.1 Dose Rate Estimates

Doses received from exposure to gaseous effluents from the CRBRP were evaluated, using equations 1 through 12 presented in the Appendix to Section 11.3 and releases as described in Table 11.3-11 (design conditions). Maximum external gamma and beta doses are expected, assuming continuous exposure at the site boundary location associated with the largest value of average annual x/Q. The associated distance is 2500 feet in the NW direction, and the average annual $x/Q = 5.1 \times 10^{-5}$ s/m^3. Although activity is released from rooftop vents, analyses assume ground releases. External gamma dose is 2.1 mrem/yr and total skin dose is 7.1 mrem/yr at this point, assuming no protection from clothing. This annual dose is well below the requirements of 10 CFR 50 Appendix I. Release point contributions to the dose are tabulated in Table 11.3-18.

Based on the population distribution for the year 2010 within 50 miles of the site, as presented in Table 2.1-12, the annual population dose associated with the external gamma dose is 3.4 man-rem/yr. Assuming a conservative value of 100 mrem as the average annual dose from naturally occurring external sources of radiation (Section 11.6), the associated population dose due to naturally occurring radioactivity is estimated to be 98,700 man-rem/yr. The calculated contribution from the CRBRP is less than 0.004 percent of the population dose from naturally occurring radioactivity.

Internal doses via the various exposure pathways to gaseous effluents (inhalation and ingestion of milk, water, vegetables, and meat) will be due almost exclusively to the presence of tritium. The noble gases are relatively inert and result in practically no internal exposure. Internal doses are reported in Table 11.3-19 on a release point basis. All dose calculations have included the BOP tritium contribution.

The growing season for leafy vegetables in the Eastern Tennessee Region is assumed to be 90 days. All other variables used in the calculation of dose from ingestion of leafy vegetables, such as total daily intake of leafy vegetables and yield per unit area of cultivated land, are provided in Table 11.3A-6 of the Appendix to Section 11.3.

Average effective grazing area of beef cattle and dairy cows is assumed to be 45 m^2. Assuming that 100% of the tritium ingested is evenly distributed within the meat and the average weight of a steer is 500 kg, the cumulative fraction of tritium transferred per kg of beef is 1.0/500 kg or 0.002/kg. Although some grains produced outside of the immediate area are used to supplement their diet, dairy cows on the farm nearest the CRBRP site are allowed to graze outside all year. It is therefore assumed that 100% of the diet of both cows and cattle comes from the fields. All other variables, such as total intake of beef or milk and elapsed time between butchering and ingestion, are provided in Table 11.3A-6 to the Appendix of Section 11.3.

Maximum total annual whole body internal dose from exposure to gaseous effluents to the hypothetical individual who eats only leafy vegetables grown in the closest home garden to the site, eats only the meat from beef cattle grazing in the closest field to the site, drinks one liter of milk per day taken only from the closest known cow to the site, drinks water from the nearest reservoir, and lives in the closest house to the site, is 0.021 mrem/yr. The estimated annual internal dose from natural radiation to an individual is 18 mrem/yr (ref. 2). Therefore, the maximum internal dose to an individual from exposure to CRBRP gaseous effluents is approximately 0.12 percent of his internal dose from naturally occurring radiation. The maximum internal dose is a factor of 4×10^{-5} of the 10 CFR 20 annual dose limits for unrestricted areas. External and internal doses resulting from exposure to daughter products of gaseous effluents have been included in the dose evaluations.

Analysis of doses due to gaseous fallout on the Clinch River assumes an annual mean depth of a reservoir from which water is taken for drinking supplies downstream of the plant site to be 4.8 m. Approximately 0.5 days are required for processing the Clinch River water into potable water. Internal whole body doses to persons drinking water is calculated with the assumption that total intake during 24 hours is 2,200 cm^3 and 1100 cm^3 for an 8 hour working day (Ref. 3). Period of exposure is assumed to be 260 days for workers and 365 days for public consumption of water. A conservative dilution factor for gaseous deposition into the river, due to flow of fresh water into a reservoir, is derived as flow out flow in. An additional dilution factor (0.16) results from the ratio of the river flow relative to the deposition velocity of the gaseous release. Maximum whole body internal dose to an individual from ingestion of water is 2.0×10^{-4} mrem/yr from the gaseous fallout. The analysis conservatively assumes, on an annual basis, one month of zero flow condition of the Clinch River at the plant site and 11 months of summer average flow (4777CFS).

Population dose assessments for the area within the fifty mile radius of the plant site have been performed. The pathways assessed considered all those previously discussed in this section. Population dose assessments via the ingestion of milk containing fallout utilized the impact for milk cow populations from the counties within a 50 mile radius of the CRBRP as provided in Ref. 4. The same general approach was applied to the population dose associated with the ingestion of beef containing fallout, i.e., a survey of the beef cattle (Ref. 4) was incorporated. The population dose associated with the ingestion of leafy vegetables utilized an extrapolation of nearby land usage from the plant site to the 50 mile radius area. Ingestion of water containing fallout effluent considered nearby reservoirs. Inhalation dose
50 assessments were also included. The man-rem internal dose values from all the pathways considered sum to a value of 0.017 man-rem per year. The assessments utilized the model specifics of section 11.3A and 50 mile radius population figures associated with the year 2010.

REFERENCES

1. U.S. Department of Defense, The Effects of Nuclear Weapons, (Glasston S., Editor), Revised Edition, USAEC, Washington, D.C., 1962.

2. Effects on Population of Exposure to Low Levels of Ionizing Radiation, Report of the Advisory Committee on the Biological Effects of Ionizing Radiations, National Academy of Sciences, National Research Council, Washington, D.C. 20006, November, 1972.

3. Recommendations of the International Commission on Radiological Protection, Report of Committee II on Permissible Dose for Internal Radiation, ICRP Publication 2, Pergamon Press, New York, New York, 1959.

4. Tennessee Statistical Abstract - 1971 Edited by M. G. Currence, Center for Business and Economic Research, University of Tennessee, Knoxville, Tennessee.

50

TABLE 11.3-1

RADIONUCLIDE INPUT RATES TO REACTOR COVER GAS*

Isotope	Half-Life	Decay Constant (day^{-1})	Input Rate (Ci/day)
Xe^{131m}	11.96 day	0.058	112
Xe^{133m}	2.26 day	0.306	3,760
Xe^{133}	5.27 day	0.131	65,100
Xe^{135m}	15.7 min	63.6	95,600
Xe^{135}	9.16 hr	1.81	334,000
Xe^{138}	14.2 min	70.2	170,000
Kr^{83m}	1.86 hr	8.98	16,400
Kr^{85m}	4.4 hr	3.78	30,000
Kr^{85}	10.76 years	1.77E-4	2.05
Kr^{87}	76 min	13.1	52,000
Kr^{88}	2.79 hr	5.96	64,400
Ar^{39}	269 years	7.0E-6	0.129
Ar^{41}	110 min	9.07	523
Ne^{23}	38 sec	1576	1.42E+9
H^{3}	12.5 years	1.52E-4	1.95E-7***
		TOTAL:	832,000 **

*For the design condition
**Exclusive of Ne^{23}
***The rate at which tritium diffuses into the cover gas to replace losses and maintain equilibrium concentrations at the liquid metal-to-gas interface.

TABLE 11.3-2

GASEOUS RADIONUCLIDE CONCENTRATION IN REACTOR COVER GAS*

Isotope	Inventory (Ci)	Concentration μCi/scc
Xe^{131m}	8.6	0.74
Xe^{133m}	2.8E+2	24.
Xe^{133}	5.0E+3	4.3E+2
Xe^{135m}	1.2E+3	1.1E+2
Xe^{135}	2.3E+4	1.9E+3
Xe^{138}	2.0E+3	1.8E+2
Kr^{83m}	7.5E+2	64
Kr^{85m}	1.8E+3	1.5E+2
Kr^{85}	0.16	1.4E-2
Kr^{87}	2.0E+3	1.7E+2
Kr^{88}	3.4E+3	2.9E+2
Ar^{39}	9.09**	0.783**
Ar^{41}	24.	2.0
Ne^{23}	8.9E+5	7.7E+4
H^{3}	1.7E-4	1.5E-5

*For the design condition
**After 30 years' operation

TABLE 11.3-3

ACTIVITY INVENTORIES IN RAPS PROCESS VESSELS

	RAPS Vacuum Vessel		RAPS Surge Vessel		RAPS Cryostill		Recycle Argon Vessels	
Isotope	Design (Ci)	Expected (Ci)	Design (Ci)	Expected (Ci)	Design (Ci)	Expected (Ci)	Design (Ci)	Expected (Ci)
Xe^{131m}	1.2	0.12	28	2.8	1.9E3	1.9E2	1.1E-3	1.1E-4
Xe^{133m}	38	3.8	8.2E2	82	1.1E4	1.1E3	3.1E-2	3.1E-3
Xe^{133}	6.9E2	69	1.6E4	1.6E3	4.7E5	4.7E4	0.61	6.1E-2
Xe^{135m}	24	2.4	32	3.2	2.0	0.20	6.6E-5	6.6E-6
Xe^{135}	2.5E3	2.5E2	4.0E4	4.0E3	8.8E4	8.8E3	1.1	0.11
Xe^{138}	35	3.5	44	4.4	2.5	0.25	8.2E-5	8.2E-6
Kr^{83m}	50	5.0	3.6E2	36	1.6E2	16	3.9E-3	3.9E-4
Kr^{85m}	1.7E2	17	2.0E3	2.0E2	2.1E3	2.1E2	3.8E-2	3.8E-3
Kr^{85}	2.2E-2	2.2E-3	0.52	5.2E-2	7.2E2	72	2.1E-5	2.1E-6
Kr^{87}	1.1E2	11	6.0E2	60	1.8E2	18	5.0E-3	5.0E-4
Kr^{88}	2.7E2	27	2.5E3	2.5E2	1.7E3	1.7E2	3.7E-2	3.7E-3
Ar^{39*}	3.5	3.5	81	81	28	28	49	49
Ar^{41}	1.8	1.8	13	13	2.5	2.5	2.2	2.2
Ne^{23}	17	17	0.97	0.97	3.4E-4	3.4E-4	1.3E-3	1.3E-3
H^{3}	6.7E-5	6.7E-5	1.6E-3	1.6E-3	5.4E-4	5.4E-4	9.5E-4	9.5E-4
Total	3.9E3	4.1E2	6.2E4	6.3E3	5.8E5	5.8E4	53	51

*After 30 years' operation

Amend. 64
Jan. 1982

TABLE 11.3-4

ACTIVITY CONCENTRATIONS IN RAPS PROCESS GAS STREAMS*

	RAPS Vacuum Vessel Effluent (μCi/scc)		RAPS Surge Vessel Effluent (μCi/scc)		Recycle Argon Vessels Effluent (μCi/scc)	
Isotope	Design	Expected	Design	Expected	Design	Expected
Xe^{131m}	0.27	2.7E-2	0.27	2.7E-2	1.8E-5	1.8E-6
Xe^{133m}	8.6	0.86	8.0	0.80	4.9E-4	4.9E-5
Xe^{133}	1.6E+2	16	1.5E+2	15	9.6E-3	9.6E-4
Xe^{135m}	5.4	0.54	0.31	3.1E-2	1.1E-6	1.1E-7
Xe^{135}	5.7E+2	57	3.9E+2	39	1.7E-2	1.7E-3
Xe^{138}	8.0	0.80	0.42	4.2E-2	1.3E-6	1.3E-7
Kr^{83m}	11	1.1	3.4	0.34	6.3E-5	6.3E-6
Kr^{85m}	38	3.8	19	1.9	6.0E-4	6.0E-5
Kr^{85}	5.0E-3	5.0E-4	5.0E-3	5.0E-4	3.4E-7	3.4E-8
Kr^{87}	25	2.5	5.8	0.58	7.9E-5	7.9E-6
Kr^{88}	61	6.1	24	2.4	5.8E-4	5.8E-5
Ar^{39}*	0.78	0.78	0.78	0.78	0.78	0.78
Ar^{41}	0.42	0.42	0.13	0.13	3.5E-2	3.5E-2
Ne^{23}	3.8	3.8	9.4E-3	9.4E-3	2.0E-5	2.0E-5
H^{3}	1.5E-5	1.5E-5	1.5E-5	1.5E-5	1.5E-5	1.5E-5
Total	8.9E+2	94	6.0E+2	61	0.84	0.82

*After 30 years' operation

TABLE 11.3-5

RAPS CRYOSTILL PERFORMANCE CHARACTERISTICS

Isotope	Decontamination* Factor
Xe^{131m}	>>1.50E+4
Xe^{133m}	>>1.50E+4
Xe^{133}	>>1.50E+4
Xe^{135m}	>>1.50E+4
Xe^{135}	>>1.50E+4
Xe^{138}	>>1.50E+4
Kr^{83m}	>1.50E+4
Kr^{85m}	>1.50E+4
Kr^{85}	>1.50E+4**
Kr^{87}	>1.50E+4
Kr^{88}	>1.50E+4
Ar^{39}	1.0
Ar^{41}	1.8
Ne^{23}	1.2
H^{3}	1.0

*Decontamination Factor = Ratio of input activity to output activity

**This quantity experimentally determined by CVI corporation

49

Amend. 49
April 1979

TABLE 11.3-6

ACTIVITY INVENTORIES IN CAPS PROCESS VESSELS

	CAPS Vacuum Vessel (Ci)		CAPS Surge Vessel (Ci)	
Isotope	Design	Expected	Design	Expected
Xe^{131m}	1.1E-3	6.8E-4	1.7E-2	1.0E-2
Xe^{133m}	7.4E-3	4.6E-3	0.11	6.8E-2
Xe^{133}	0.27	0.21	4.0	3.2
Xe^{135m}	1.4E-3	6.8E-4	5.8E-3	2.7E-3
Xe^{135}	0.23	3.4E-2	3.2	0.48
Xe^{138}	1.2E-3	1.5E-4	4.5E-3	5.4E-4
Kr^{83m}	4.5E-3	6.4E-4	4.9E-2	7.0E-3
Kr^{85m}	1.5E-2	2.2E-3	0.20	2.9E-2
Kr^{85}	9.4E-3	4.6E-3	0.14	6.9E-2
Kr^{87}	9.1E-3	1.3E-3	8.8E-2	1.3E-2
Kr^{88}	2.5E-2	3.6E-3	0.30	4.4E-2
Ar^{39}*	1.1E-3	6.6E-4	1.6E-2	9.9E-3
Ar^{41}	5.3E-4	2.3E-4	5.8E-3	2.5E-3
Ne^{23}	8.8E-6	8.8E-6	1.9E-6	1.9E-6
H^{3}	8.3E-6	8.3E-6	1.3E-4	1.3E-4
Total	0.57	0.27	8.2	4.0

*After 30 years' operation

TABLE 11.3-7

ACTIVITY CONCENTRATIONS IN CAPS PROCESS STREAM

Isotope	Influent to Vacuum Vessel (μCi/scc)		Effluent from the Second Charcoal Bed (μCi/scc)	
	Design	Expected	Design	Expected
Xe^{131m}	2.6E-4	1.5E-4	1.1E-10	*
Xe^{133m}	1.7E-3	1.0E-3	*	*
Xe^{133}	6.1E-2	4.8E-2	*	*
Xe^{135m}	3.8E-4	1.8E-4	*	*
Xe^{135}	5.2E-2	7.7E-3	*	*
Xe^{138}	3.2E-4	3.9E-5	*	*
Kr^{83m}	1.0E-3	1.5E-4	3.3E-10	*
Kr^{85m}	3.5E-3	5.1E-4	5.5E-6	8.1E-7
Kr^{85}	2.1E-3	1.0E-3	1.7E-3	8.2E-4
Kr^{87}	2.1E-3	3.0E-4	*	*
Kr^{88}	5.7E-3	8.4E-4	2.6E-7	3.8E-8
Ar^{39}**	2.4E-4	1.5E-4	1.9E-4	1.2E-4
Ar^{41}	1.2E-4	5.4E-5	3.7E-5	1.6E-5
Ne^{23}	1.1E-5	1.1E-5	*	*
H^3	1.9E-6	1.9E-6	1.5E-8	1.5E-8
Total	0.13	6.1E-2	1.9E-3	9.6E-4

*<<E-10
**After 30 years' operation

TABLE 11.3-8

CAPS DECONTAMINATION FACTORS

	Isotope	Decontamination Factors
	Xe^{131m}	1.8E+6
	Xe^{133m}	*
	Xe^{133}	*
	Xe^{135m}	*
	Xe^{135}	*
	Xe^{138}	*
	Kr^{83m}	2.5E+6
49	Kr^{85m}	5.0E+2
	Kr^{85}	1.0
	Kr^{87}	2.2E+9
49	Kr^{88}	1.8E+4
	Ar^{39}	1.0
	Ar^{41}	2.6
	Ne^{23}	*
49	H^{3}	1.0E+2

*>>E + 10

TABLE 11.3-9

RADIONUCLIDE RELEASE RATES AND RELEASE PATHS FOR THE DESIGN VALUE SERVICE CONDITION

(Sheet 1 of 2)

Isotope	Cover Gas Leakage RCB H&V Exhaust (Ci/day)	Buffer Seal Leakage-RCB H&V Exhaust (Ci/day)	Primary Piping Leakage-RCB Cells to CAPS to RSB H&V Exhaust (Ci/day)	RAPS +++ Components Leakage - RCB Cells to RCB H&V Exhaust (Ci/day)	Noble Gas Effluent to CAPS to RSB H&V Exhaust (Ci/day)	Fuel Failure Monitoring System Effluent to CAPS to RSB H&V Exhaust (Ci/day)
Xe^{131m}	4.7E-6	1.8E-7	5.9E-10	3.9E-4	*	2.0E-8
Xe^{133m}	1.5E-4	4.9E-6	**	1.2E-2	*	**
Xe^{133}	2.7E-3	9.7E-5	**	2.2E-1	*	**
Xe^{135m}	7.0E-4	1.1E-8	*	4.5E-4	*	*
Xe^{135}	1.2E-2	1.7E-4	*	5.6E-1	*	*
Xe^{138}	1.1E-3	1.3E-8	*	6.0E-4	*	*
Kr^{83m}	4.1E-4	6.4E-7	3.7E-8	4.9E-3	*	6.0E-7
Kr^{85m}	9.5E-4	6.0E-6	4.3E-4	2.7E-2	*	1.0E-2
Kr^{85}	+	+	+	+	1.9	+
Kr^{87}	1.1E-3	8.0E-7	1.1E-10	8.4E-3	*	1.4E-9
Kr^{88}	1.8E-3	5.8E-6	2.3E-5	3.5E-2	*	4.7E-4
Ar^{39}	5.0E-6	7.9E-3	1.1E-3	1.1E-3	7.8E-2	0.18
Ar^{41}	1.3E-5	3.5E-4	1.1E-3	1.8E-4	*	0.12
Ne^{23}	*	*	*	*	*	*
H^{3++}	9.5E-11	1.5E-7	1.9E-5	2.2E-8	<1.E-5	3.4E-8
Total	1.8E-2	8.5E-3	2.7E-3	8.7E-1	2.0	0.31

*Less than E-48

**Less than E-12

+Leakage of Kr85 is not included since it is removed by the cryostill and, therefore, accounted for in the Noble Gas Effluent Column

++BOP Tritium Release (6.3E-5 Ci/day for a plant capacity factor of 0.68) from T-G Building Exhaust not included. Also, allowance for 2 weeks per year bypass of the oxidizer unit (amounts to 0.04 curies of tritium exhausted to the RSB H&V exhaust) is not included.

+++CAPS components leakage is negligible.

TABLE 11.3-9

RADIONUCLIDE RELEASE RATES AND RELEASE PATHS FOR THE DESIGN VALUE SERVICE CONDITION

(Sheet 2 of 2)

Isotope	Refueling Effluent to CAPS to RSB H&V Exhaust (Ci/day)	Maintenance Effluent to CAPS to RSB H&V Exhaust (Ci/day)	Aux. Liquid Metal Effluent to CAPS to RSB H&V Exhaust (Ci/day)	Impurity Monitoring & Analysis Effluent to CAPS to RSB H&V Exhaust (Ci/day)	Intermediate Bay Leakage (Ci/day)	Totals (Sheets 1 and 2) (Ci/day)
Xe^{131m}	1.2E-7	*	7.8E-8	2.9E-11	0	3.9E-4
Xe^{133m}	**	*	*	**	0	1.2E-2
Xe^{133}	**	**	**	**	0	0.22
Xe^{135m}	*	*	*	*	0	1.1E-3
Xe^{135}	*	*	*	*	0	0.57
Xe^{138}	*	*	*	*	0	1.7E-3
Kr^{83m}	*	*	*	1.8E-9	0	5.3E-3
Kr^{85m}	*	*	*	2.2E-5	0	3.7E-2
Kr^{85}	1.4	*	*	9.7E-7	0	3.3
Kr^{87}	*	*	*	5.5E-12	0	9.4E-3
Kr^{88}	*	*	*	1.2E-6	0	3.7E-2
Ar^{39}	0.11	*	*	5.6E-5	0	0.38
Ar^{41}	*	*	*	3.4E-5	0	0.12
Ne^{23}	*	*	*	*	0	*
H^{3++}	*	*	*	1.1E-11	1.6E-4	1.9E-4
Total	1.5	**	7.8E-8	1.1E-4	1.6E-4	4.6

*Less than E-50
**Less than E-13
++BOP Tritium Release (6.3E-5 Ci/day for a plant capacity factor of 0.68) from T-G Building Exhaust not included. Also, allowance for 2 weeks per year bypass of the oxidizer unit (amounts to 0.04 curies of tritium exhausted to the RSB H&V exhaust) is not included.

TABLE 11.3-10

RADIONUCLIDE RELEASE RATES AND RELEASE PATHS FOR THE EXPECTED SERVICE CONDITION
(Sheet 1 of 2)

Isotope	Cover Gas Leakage RCB H&V Exhaust (Ci/day)	Buffer Seal Leakage-RCB H&V Exhaust (Ci/day)	Primary Piping Leakage-RCB Cells to CAPS to RSB H&V Exhaust (Ci/day)	RAPS +++ Components Leakage - RCB Cells to RCB H&V Exhaust (Ci/day)	Noble Gas Effluent to CAPS to RSB H&V Exhaust (Ci/day)	Fuel Failure Monitoring System Effluent to CAPS to RSB H&V Exhaust (Ci/day)
Xe^{131m}	4.7E-7	1.8E-8	5.9E-11	3.9E-5	*	2.9E-9
Xe^{133m}	1.5E-5	4.9E-7	**	1.2E-3	*	**
Xe^{133}	2.7E-4	9.7E-6	**	2.2E-2	*	**
Xe^{135m}	7.0E-5	1.1E-9	*	4.5E-5	*	*
Xe^{135}	1.2E-3	1.7E-5	*	5.6E-2	*	*
Xe^{138}	1.1E-4	1.3E-9	*	6.0E-5	*	*
Kr^{83m}	4.1E-5	6.4E-8	3.7E-9	4.9E-4	*	8.9E-8
Kr^{85m}	9.5E-5	6.0E-7	4.3E-5	2.7E-3	*	1.5E-3
Kr^{85}	+	+	+	+	1.9E-1	+
Kr^{87}	1.1E-4	8.0E-8	1.1E-11	8.4E-4	*	2.0E-10
Kr^{88}	1.8E-4	5.8E-7	2.3E-6	3.5E-3	*	7.0E-5
Ar^{39}	5.0E-6	7.9E-3	1.1E-3	1.1E-3	7.8E-2	4.4E-2
Ar^{41}	1.3E-5	3.5E-4	1.1E-3	1.8E-4	*	3.0E-2
Ne^{23}	*	*	*	*	*	*
H^{3++}	9.5E-11	1.5E-7	1.9E-5	2.2E-8	< 1E-5	8.5E-9
Total	2.1	8.1E-3	2.2E-3	8.8E-2	0.27	7.6E-2

*Less than E-50
**Less than E-14
++BOP Tritium Release (6.3E-5 Ci/day for a plant capacity factor of 0.68) from T-G Building Exhaust not included. Also, allowance for 2 weeks per year bypass of the oxidizer unit (amounts to 0.04 curies of tritium exhausted to the RSB H&V exhaust) is not included.
+++CAPS components leakage is negligible.

TABLE 11.3-10

RADIONUCLIDE RELEASE RATES AND RELEASE PATHS FOR THE EXPECTED SERVICE CONDITION

(Sheet 2 of 2)

Isotope	Refueling Effluent to CAPS to RSB H&V Exhaust (Ci/day)	Maintenance Effluent to CAPS to RSB H&V Exhaust (Ci/day)	Aux. Liquid Metal Effluent to CAPS to RSB H&V Exhaust (Ci/day)	Impurity Monitoring & Analysis Effluent to CAPS to RSB H&V Exhaust (Ci/day)	Intermediate Bay Leakage (Ci/day)	Totals (Sheets 1 and 2) (Ci/day)
Xe^{131m}	1.2E-7	*	7.8E-9	2.9E-12	0	3.9E-5
Xe^{133m}	**	*	*	**	0	1.2E-3
Xe^{133}	4.8E-13	**	**	**	0	2.2E-2
Xe^{135m}	*	*	*	*	0	1.1E-4
Xe^{135}	*	*	*	*	0	5.7E-2
Xe^{138}	*	*	*	*	0	1.7E-4
Kr^{83m}	*	*	*	1.8E-10	0	5.3E-4
Kr^{85m}	*	*	*	2.2E-6	0	4.5E-3
Kr^{85}	1.4	*	*	9.7E-8	0	1.6
Kr^{87}	*	*	*	5.5E-13	0	9.5E-4
Kr^{88}	*	*	*	1.2E-7	0	3.7E-3
Ar^{39}	0.11	*	*	5.6E-5	0	0.24
Ar^{41}	*	*	*	3.4E-5	0	3.2E-2
Ne^{23}	*	*	*	*	0	*
H^{3++}	*	*	*	1.1E-11	1.6E-4	1.9E-4
Total	1.5	**	7.8E-8	9.2E-5	1.6E-4	1.9

*Less than E-50

**Less than E-14

++BOP Tritium Release (6.3E-5 Ci/day for a plant capacity factor of 0.68) from T-G Building Exhaust not included. Also, allowance for 2 weeks per year bypass of the oxidizer unit (amounts to 0.04 curies of tritium exhausted to the RSB H&V exhaust) is not included.

TABLE 11.3-11

ANNUAL ACTIVITY RELEASE RATES FOR THE DESIGN SERVICE CONDITION

Radionuclide	Main RCB H&V Exhaust (Ci/year)	RSB H&V Exhaust (Ci/year)	Intermediate Bay Leakage (Ci/year)	Total Release (Ci/year)
Xe^{131m}	0.14	8.0E-5	0	0.14
Xe^{133m}	4.3	1.0E-30	0	4.3
Xe^{133}	80	2.3E-10	0	80
Xe^{135m}	0.42	+	0	0.42
Xe^{135}	2.1E2	+	0	2.1E2
Xe^{138}	0.64	+	0	0.64
Kr^{83m}	1.9	2.3E-4	0	1.9
Kr^{85m}	10	4.0	0	14
Kr^{85}	+++	1.2E+3	0	1.2E+3
Kr^{87}	3.4	5.4E-7	0	3.4
Kr^{88}	13	0.18	0	13
Ar^{39}	3.3	1.3E+2	0	1.4E2
Ar^{41}	0.20	45	0	45
Ne^{23}	+	+	0	+
H^{3}++	6.3E-5	1.1E-2	5.8E-2	6.9E-2
Totals	3.3E2	1.4ER	5.8E-2	1.7E3

+<E-45

++BOP Tritium Release (0.023 Ci/yr for a plant capacity factor of 0.68) from T-G Building Exhaust not included.

Also, allowance for 2 weeks per year bypass of the oxidizer unit (amounts to 0.04 curies of tritium exhausted to the RSB H&V exhaust) is not included.

+++Leakage of Kr85 is not included since it is removed by the cryostill and, therefore, is accounted for in the RSB H&V Exhaust Column.

TABLE 11.3-12

ANNUAL ACTIVITY RELEASE RATES FOR THE EXPECTED SERVICE CONDITION

Radionuclide	Main RCB H&V Exhaust (Ci/year)	RSB H&V Exhaust (Ci/year)	Intermediate Bay Leakage (Ci/year)	Total Release (Ci/year)
Xe^{131m}	1.4E-2	4.9E-5	0	1.4E-2
Xe^{133m}	0.43	6.2E-31	0	0.43
Xe^{133}	8.0	1.8E-10	0	8.0
Xe^{135m}	4.2E-2	+	0	4.2E-2
Xe^{135}	21	+	0	21
Xe^{138}	6.2E-2	+	0	6.4E-2
Kr^{83m}	0.19	3.4E-5	0	0.19
Kr^{85m}	1.0	0.58	0	1.6
Kr^{85}	**	5.8E2	0	5.8E2
Kr^{87}	0.34	7.8E-8	0	0.34
Kr^{88}	1.3	2.6E-2	0	1.4
Ar^{39}	3.3	85	0	89
Ar^{41}	0.20	12	0	12
Ne^{23}	+	+	0	+
H^{3}++	6.3E-5	1.1E-2	5.8E-2	6.9E-2
Totals	37	6.7E2	5.8E-2	7.2E2

+<E-45

++BOP Tritium Release (0.23 Ci/yr for a plant capacity factor of 0.68) from T-G Building Exhaust not included.

Also, allowance for 2 weeks per year bypass of the oxidizer unit (amounts to 0.04 curies of tritium exhausted to the RSB H&V exhaust) is not included.

**Leakage of Kr85 is not included since it is removed by the cryostill and, therefore, is accounted for in the RSB H&V Exhaust column.

RADIONUCLIDE CONCENTRATIONS IN HEAD ACCESS AREA

Isotope	MPC* (μCi/cc)	Design Concentration (μCi/cc)	Design Concentration ÷ MPC	Expected Concentration (μCi/cc)	Expected Concentration ÷ MPC
Xe^{131m}	2E-5	6.6E-12	3.3E-7	6.6E-13	3.3E-8
Xe^{133m}	1E-5	2.1E-10	2.1E-5	2.1E-11	2.1E-6
Xe^{133}	1E-5	3.8E-9	3.8E-4	3.8E-10	3.8E-5
Xe^{135m}	1E-6	9.5E-10	9.5E-4	9.5E-11	9.5E-5
Xe^{135}	4E-6	1.7E-8	4.1E-3	1.7E-9	4.1E-4
Xe^{138}	1E-6	1.5E-9	1.5E-3	1.5E-10	1.5E-4
Kr^{83m}	1E-6	5.6E-10	5.6E-4	5.6E-11	5.6E-5
Kr^{85m}	6E-6	1.3E-9	2.2E-4	1.3E-10	2.2E-5
Kr^{85}	1E-5	1.3E-13	1.3E-8	1.3E-14	1.3E-9
Kr^{87}	1E-6	1.5E-9	1.5E-3	1.5E-10	1.5E-4
Kr^{88}	1E-6	2.5E-9	2.5E-3	2.5E-10	2.5E-4
Ar^{39}	8E-6	1.1E-8	1.3E-3	1.1E-8	1.3E-3
Ar^{41}	2E-6	5.0E-10	2.5E-4	5.0E-10	2.5E-4
Ne^{23}**	1E-6	0	0	0	0
H^{3}	5E-6	2.0E-13	4.1E-8	2.0E-13	4.1E-8
Totals		4.1E-8	1.3E-2	1.4E-8	2.1E-3

*10CFR20, Appendix B, Table I (restricted area), except for Ar39, which has been scaled to Kr85.

**Ne^{23} is not included because a minimum period of 5 minutes will occur for leakage from cover gas to head access area. Thus Ne^{23} will not be present in the head access area. Decay during transit is not considered in evaluating any other isotope.

Head access area flow rate = 18,000 scfm

TABLE 11.3-14

RADIONUCLIDE CONCENTRATIONS AT SITE BOUNDARY FROM RSB EXHAUST+

Isotope	MPC* (μCi/cc)	Design Concentration (μCi/cc)	Design Concentration ÷ MPC	Expected Concentration (μCi/cc)	Expected Concentration ÷ MPC
Xe^{131m}	4E-7	1.3E-16	3.3E-10	7.8E-18	2.0E-10
Xe^{133m}	3E-7	1.6E-42	5.5E-36	1.0E-42	3.4E-36
Xe^{133}	3E-7	3.7E-22	1.2E-15	3.0E-22	9.9E-16
Xe^{135m}	3E-8	**	**	**	**
Xe^{135}	1E-7	**	**	**	**
Xe^{138}	3E-8	**	**	**	**
Kr^{83m}	3E-8	3.8E-16	1.3E-8	5.4E-17	1.8E-9
Kr^{85m}	1E-7	6.4E-12	6.4E-5	9.3E-13	9.3E-6
Kr^{85}	3E-7	1.9E-9	6.5E-3	9.4E-10	3.1E-3
Kr^{87}	2E-8	8.8E-19	4.4E-11	1.3E-19	6.3E-12
Kr^{88}	2E-8	2.9E-13	1.5E-5	4.2E-14	2.1E-6
Ar^{39}	2E-7	2.2E-10	1.1E-3	1.4E-10	6.9E-4
Ar^{41}	4E-8	1.3E-11	1.8E-3	1.8E-11	4.7E-4
Ne^{23}	3E-8	**	**	**	**
H^{3}	2E-7	1.8E-14	8.9E-8	1.8E-14	8.9E-8
Totals		2.2E-9	9.5E-3	1.1E-9	4.3E-3

*10CFR20, Appendix B, Table II (unrestricted area), except for Ar39, which has been scaled to Kr85.
**<E-50
+Release point No. 5 on Figure 11.3-9.

TABLE 11.3-15

RADIONUCLIDE CONCENTRATIONS AT SITE BOUNDARY FROM RCB EXHAUST

Isotope	MPC* (μCi/cc)	Design Concentration (μCi/cc)	Design Concentration ÷ MPC	Expected Concentration (μCi/cc)	Expected Concentration ÷ MPC
Xe^{131m}	4E-7	2.3E-13	5.8E-7	2.3E-14	5.8E-8
Xe^{133m}	3E-7	6.9E-12	2.3E-5	6.9E-13	2.3E-6
Xe^{133}	3E-7	1.3E-10	4.3E-4	1.3E-11	4.3E-5
Xe^{135m}	3E-8	6.7E-13	2.2E-5	6.7E-14	2.2E-6
Xe^{135}	1E-7	3.4E-10	3.4E-3	3.4E-11	3.4E-4
Xe^{138}	3E-8	1.0E-12	3.4E-5	1.0E-13	3.4E-6
Kr^{83m}	3E-8	3.1E-12	1.0E-4	3.1E-13	1.0E-5
Kr^{85m}	1E-7	1.7E-11	1.7E-4	1.7E-12	1.7E-5
Kr^{85}	3E-7	4.3E-15	1.4E-8	4.3E-16	1.4E-9
Kr^{87}	2E-8	5.6E-12	2.8E-4	5.6E-13	2.8E-5
Kr^{88}	2E-8	2.1E-11	1.1E-3	2.1E-12	1.1E-4
Ar^{39}	2E-7	5.3E-12	2.7E-5	5.3E-12	2.7E-5
Ar^{41}	4E-8	3.2E-13	8.1E-6	3.2E-13	8.1E-6
Ne^{23}	3E-8	**	**	**	**
H^3	2E-7	1.0E-16	5.1E-10	1.0E-16	5.1E-10
Totals		5.3E-10	5.6E-3	5.8E-11	5.9E-4

*10CFR20, Appendix B, Table II (unrestricted area), except for Ar39, which has been scaled to Kr85.
**<E-50

TABLE 11.3-16

TRITIUM CONCENTRATION AT SITE BOUNDARY
FROM T. G. BUILDING EXHAUST

MPC* (μCi/cc)	Concentration (μCi/cc)	Concentration ÷ MPC
2E-7	3.7E-14	1.9E-7

TABLE 11.3-16a

TRITIUM CONCENTRATION AT SITE BOUNDARY
FROM IB EXHAUST

MPC* (μCi/cc)	Concentration (μCi/cc)	Concentration ÷ MPC
2E-7	9.4E-14	4.7E-7

*10 CFR 20, Appendix B, Table II (unrestricted area).

TABLE 11.3-17

DESIGN PARAMETERS OF RAPS AND CAPS PROCESS VESSELS

Items	Number Required	+, ** Design Code	Seismic Category	Design Pressure (psig)	Normal Operating Pressure (psig)	Design Temperature (°F)	Operating Temperature (°F)	Volume (scf)	Capacity at Operating Pressure and Temperature (scf)	Materials of Construction
Storage Vessels, Recycle Argon	2	III-2	I	200	35	250	80 to 120	720 (total)	2200	Carbon Steel
RAPS Cryogenic Distillation Vessel	1	III-3	I	-14.7, 200	32	-320	-282	3.6 net	58	Stainless Steel
RAPS Vacuum Vessel	1	III-3	I	-14.7, 200	-7 to -2	250	120	261	125 to 206	Carbon Steel
RAPS Surge Vessel	1	III-3	I	-14.7, 200	103	250	120	500	3600	Carbon Steel
RAPS Storage Vessel, Noble Gas	1	III-3	I	-14.7, 200	35	250	70	260	880	Carbon Steel
CAPS Charcoal Bed Vessels	2	III-3	I	-14.7, 200	34	-320	-134	64 (total)	DNA*	Stainless Steel
CAPS Vacuum Vessel	1	III-3	I	-14.7, 200	-7 to -2	250	120	260	124 to 204	Carbon Steel
CAPS Surge Vessel	1	III-3	I	-14.7, 200	35 to 135	250	70 to 120	698	2360	Carbon Steel

*Does not apply because of adsorption variable
**ASME Section III, Class 3 - III-3
+Design Code listed may be higher for reasons other than safety
++Saturation Temperature at normal operating pressure

TABLE 11.3-18

EXTERNAL DOSES* AT SITE BOUNDARY TO AN INDIVIDUAL VIA GASEOUS EFFLUENTS FROM CRBRP DESIGN RELEASE POINTS

	Total Skin (mrem/yr)	Whole Body Gamma (mrem/yr)
Main RCB H&V Exhaust**	2.5	1.3
CAPS RSB H&V Exhaust***	4.6	0.76
Intermediate Bay Leakage	4.1E-6	0
T-G Building Exhaust	1.6E-6	0
Total (mrem/yr)	7.1	2.1

*Design condition

**Includes the contribution from the daughter product of Kr88 which is Rb88.

***Contribution from Rb88 is negligible

TABLE 11.3-19

RELEASE POINT DESCRIPTION OF INTERNAL WHOLE BODY DOSES
DUE TO CRBRP GASEOUS EFFLUENTS

	Ingestion of Beef	Inhalation	Ingestion of Vegetables	Ingestion of Milk	Ingestion of Water
A. Individual (mrem/yr)					
Main RCB H&V Exhaust	1.5E-6	1.7E-7	7.3E-7	8.6E-6	1.1E-7
CAPS RSB H&V Exhaust*	1.2E-3	1.4E-4	5.8E-4	6.9E-3	8.8E-5
Intermediate Bay Leakage	1.4E-3	1.6E-4	6.7E-4	8.0E-3	1.0E-4
T-G Building H&V Exhaust	5.5E-4	6.4E-5	1.0E-5	3.2E-3	4.6E-5
Total	3.2E-3	3.6E-4	1.3E-3	1.8E-2	2.3E-4
B. Population, 50-mile radius (man-rem/yr)	2.4E-3	4.2E-4	4.4E-4	1.5E-2	1.3E-3

*Includes two weeks oxidizer bypass.

TABLE 11.3-20

EFFLUENT RELEASE POINTS DESIGN DATA

Release Point	Release Point Elevation	Distance From RCB	Degree From Plant N-S Axis (Clockwise)	Discharge Flow Rate (CFM)	Discharge Velocity (Ft/min.)	Discharge Temperature (°F)	Size & Shape of Discharge Orifice
Steam Generator Building							
#1 Intermediate Bay	857'-0"	125'	105°	64,000	1,780	55-120	6'-0" x 6'0"(1)
#2 Steam Generator Cells-Loop 1	886'-0"	200'	345°	81,000	1,690	55-120	8' x 6'[1]
#3 Steam Generator Cells-Loop 2	886'-0"	200'	5°	74,000	1,550	55-120	8' x 6'[1]
#4 Steam Generator Cells-Loop 3	886'-0"	230'	25°	91,000	1,900	55-120	8' x 6'[1]
Reactor Service Building							
#6 Radwaste Area	884'-0"	260'	175°	46,000	600	55-140	7'0" x 7'0"(1)
#22 RSA Clean-Up Filter Units Exhaust	884'-0"	125'	120°	18,000	1,800	55-120	3'0" x 3'-4"
#23 RCB H&V Exhaust	884'-0"	150'	145°	14,000	1,750	55-120	2'-10" x 2'-10"
Turbine Generator Building							
West Bay Release Pt. #7	861'-1"	410'	11°	650	345	55-120	Annular Area 1.88 Ft^2
Release Pt. #8	861'-1"	398'	13°	800	425	55-120	1.88 Ft^2

TABLE 11.3-20

EFFLUENT RELEASE POINTS DESIGN DATA
(Continued)

Release Point	Release Point Elevation	Distance From RCB	Degree From Plant N-S Axis (Clockwise)	Discharge Flow Rate (CFM)	Discharge Velocity (Ft/min.)	Discharge Temperature (°F)	Size & Shape of Discharge Orifice
Turbine Generator Building (Cont'd.)							
Release Pt. #9	861'-1"	390'	12°	8,000	1,380	55-120	5.8 Ft^2
East Bay Release Pt. #10	879'-0"	262'	347°	8,000	1,380	55-120	5.8 Ft^2
Turbine Bay Release Pt. #11	905'-6"	238'	359°	27,000	1,155	55-120	23.4 Ft^2
Release Pt. #12	905'-6"	270'	359°	27,000	1,155	55-120	23.4 Ft^2
Release Pt. #13	905'-6"	305'	359°	27,000	1,155	55-120	23.4 Ft^2
Release Pt. #14	905'-6"	345'	359°	26,000	1,110	55-120	23.4 Ft^2
Release Pt. #15	905'-6"	385'	359°	26,000	1,110	55-120	23.4 Ft^2
Deaerator Bay Release Pt. #16	920'-6"	320'	10°	26,000	1,110	55-120	23.4 Ft^2
Release Pt. #17	920'-6"	258'	13°	26,000	1,110	55-120	23.4 Ft^2
Release Pt. #18	920'-6"	278'	11°	27,000	675	55-120	40 Ft^2
#24 Denerator Exhaust	931'-0"	294'	11°	1,400lb/hr	TBD	150-310	6" Dia.
#25 Steam Packing Exhauster Exhaust	868'-0"	304'	14°	573	1,650	177	8" Dia.
Plant Service Building							
Release Pt. #19	835'-0"	178'	225°	19,200	2,000	70-75	42" Dia.

TABLE 11.3-20

EFFLUENT RELEASE POINTS DESIGN DATA
(Continued)

Release Point	Release Point Elevation	Distance From RCB	Degree From Plant N-S Axis (Clockwise)	Discharge Flow Rate (CFM)	Discharge Velocity (Ft/min.)	Discharge Temperature (°F)	Size & Shape of Discharge Orifice
Reactor Containment/ Confinement Building							
20A Annulus Air Cooling Exhaust	991'-0"	28'	15°	50,000	174	55-430	6' x 6'
20B Annulus Air Cooling Exhaust	991'-0"	28'	15°	50,000	174	55-430	6' x 6'
20C Annulus Air Cooling Exhaust	991'-0"	28'	15°	50,000	174	55-430	6' x 6'
20D Annulus Air Cooling Exhaust	991'-0"	28'	15°	50,000	174	55-430	6' x 6'
20E Annulus Air Cooling Exhaust	991'-0"	28'	15°	50,000	174	55-430	6' x 6'
20F Annulus Air Cooling Exhaust	991'-0"	28'	15°	50,000	174	55-430	6' x 6'
20G Annulus Air Cooling Exhaust	991'-0"	28'	15°	50,000	174	55-430	6' x 6'
20H Annulus Air Cooling Exhaust	991'-0"	28'	15°	50,000	174	55-430	6' x 6'
21 Containment Cleanup System/ Annulus Pressure Maintenance and Filtration System Exhaust	987'-0"	52'	115°	21,770	3080/1980	55-200	3' diameter pipe

1 Rectangular

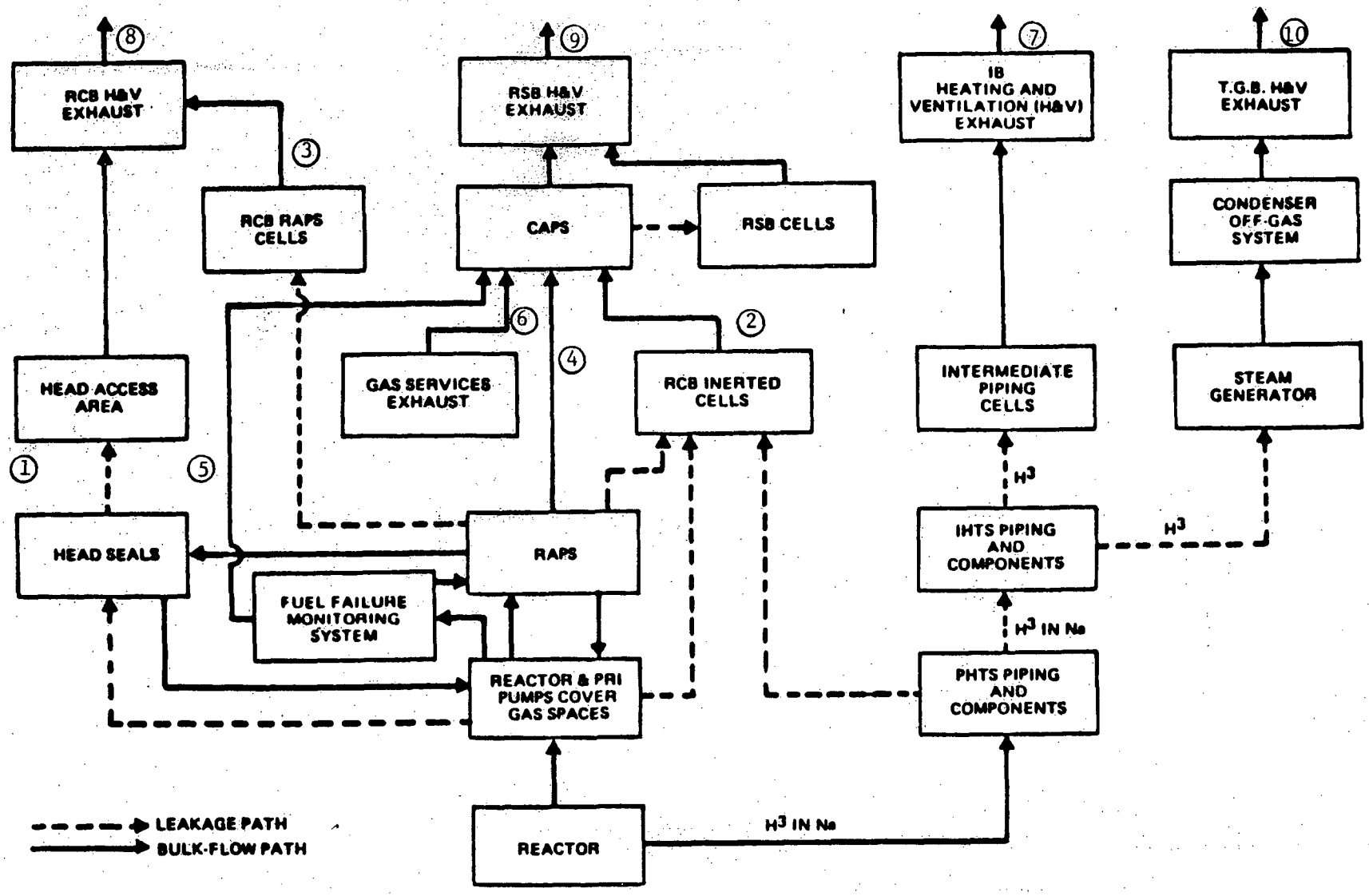

Figure 11.3-1. Radiactive Gas Flow Paths

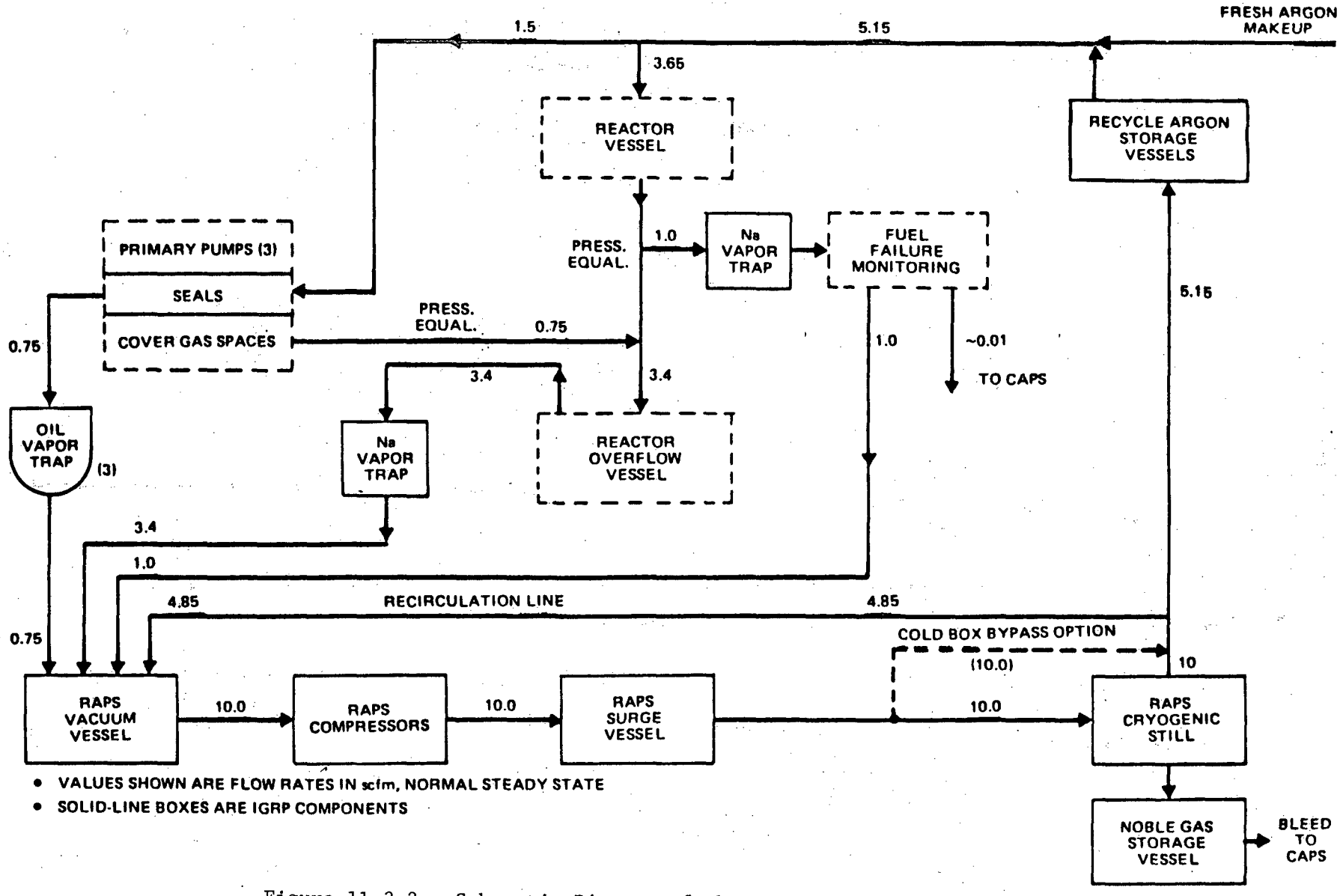

- VALUES SHOWN ARE FLOW RATES IN scfm, NORMAL STEADY STATE
- SOLID-LINE BOXES ARE IGRP COMPONENTS

Figure 11.3-2. Schematic Diagram of the Recycle Argon Circuit

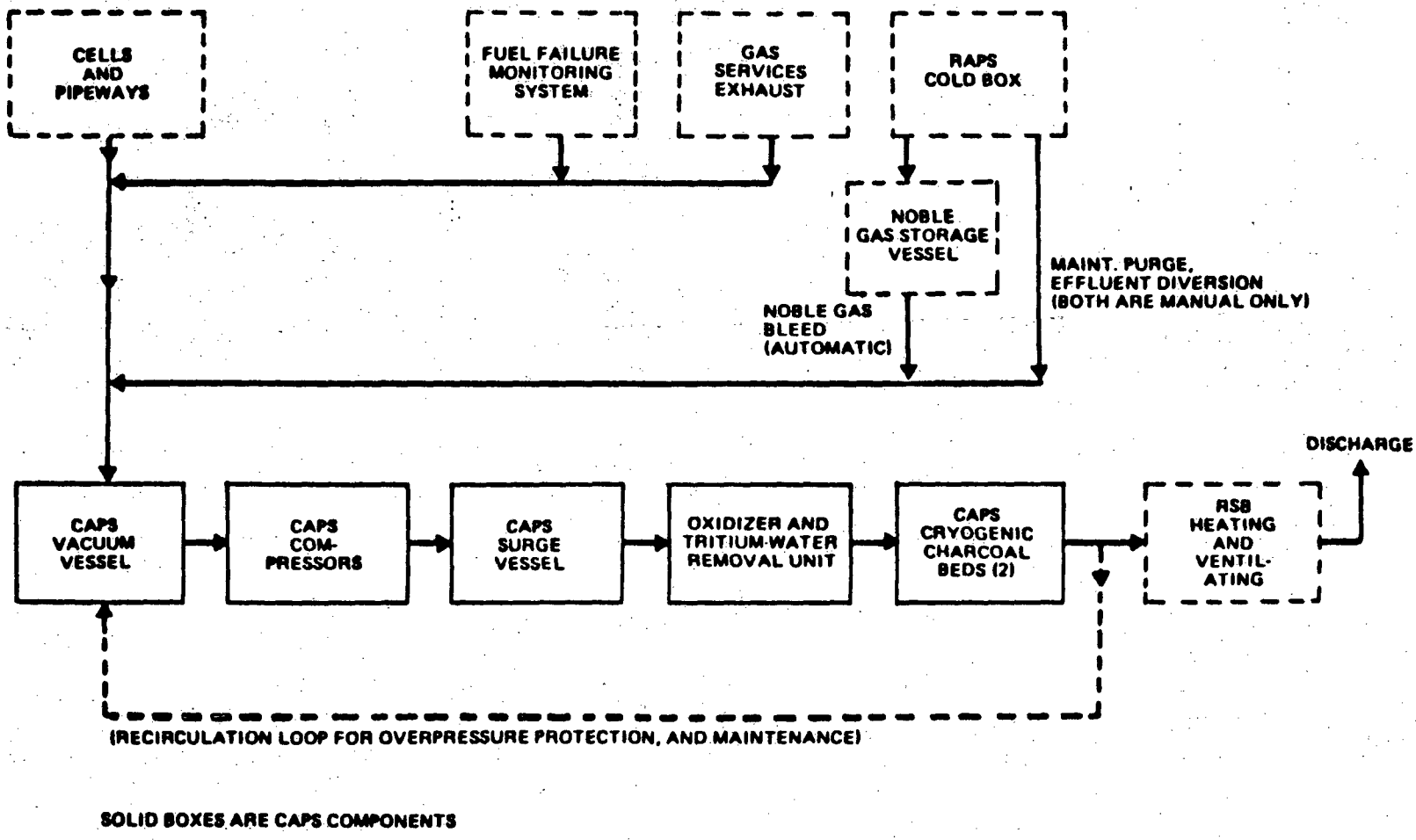

Figure 11.3-3. Schematic Diagram of CAPS Process Flow

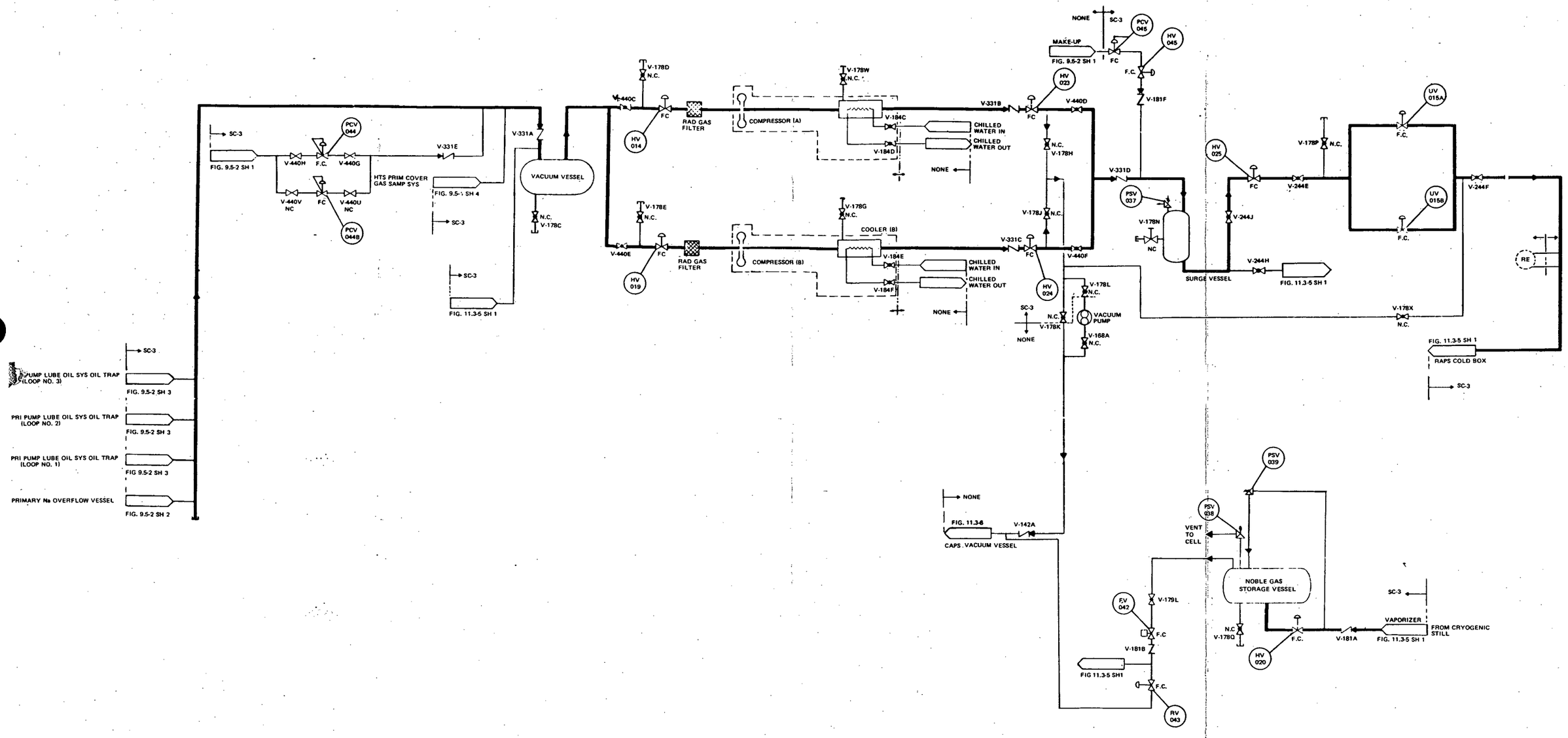

Figure 11.3-4 Flow Diagram - RAPS

Amend. 64
Jan. 1982

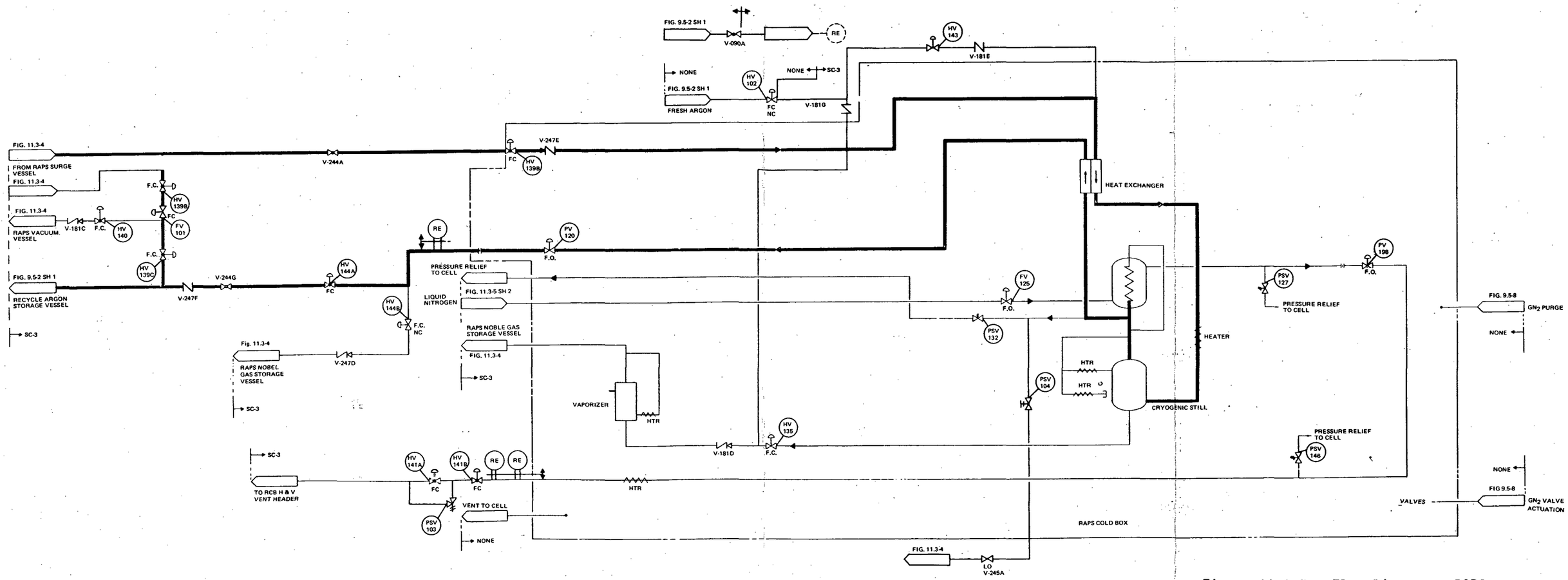

Figure 11.3-5 Flow Diagram - RAPS (Sheet 1 of 2)

Amend. 64
Jan. 1982

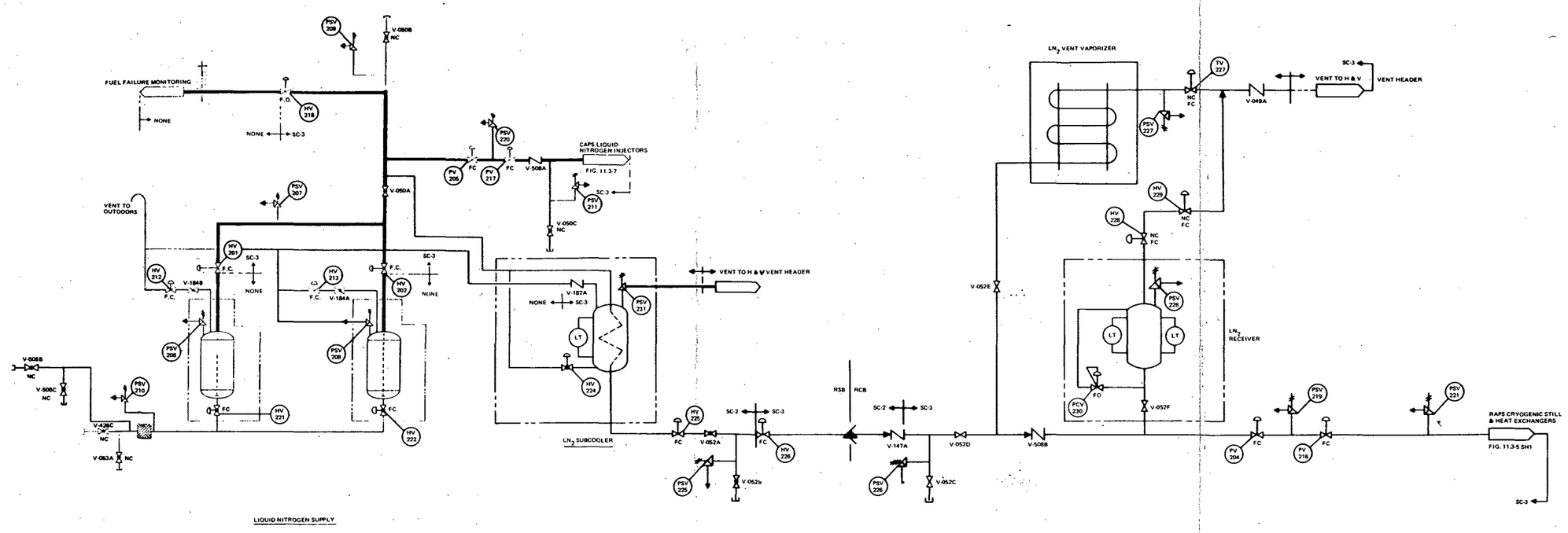

Figure 11.3-5 Flow Diagram - RAPS (Sheet 2 of 2)

Amend. 64
Jan. 1982

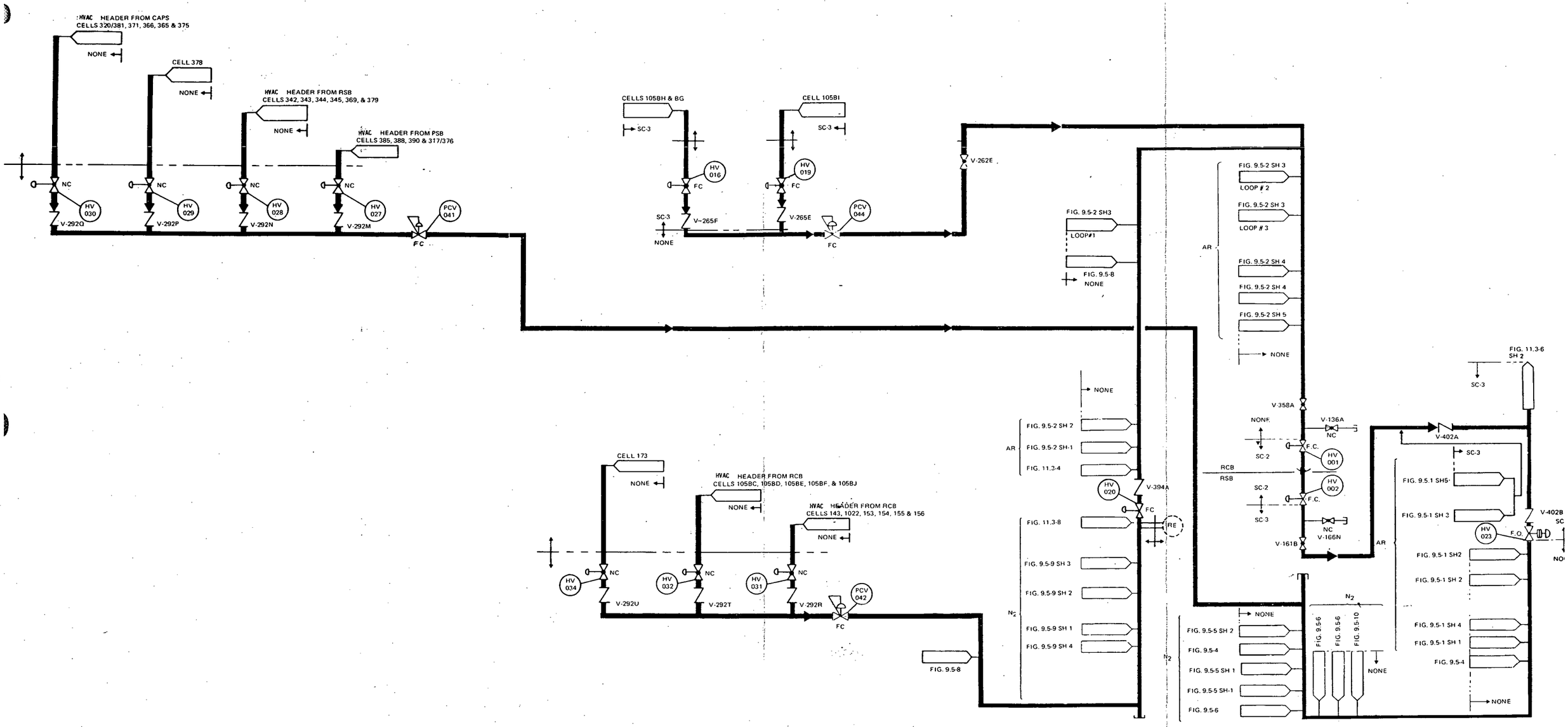

Figure 11.3-6 Flow Diagram - CAPS (Sheet 1 of 2)

Amend. 64
Jan. 1982

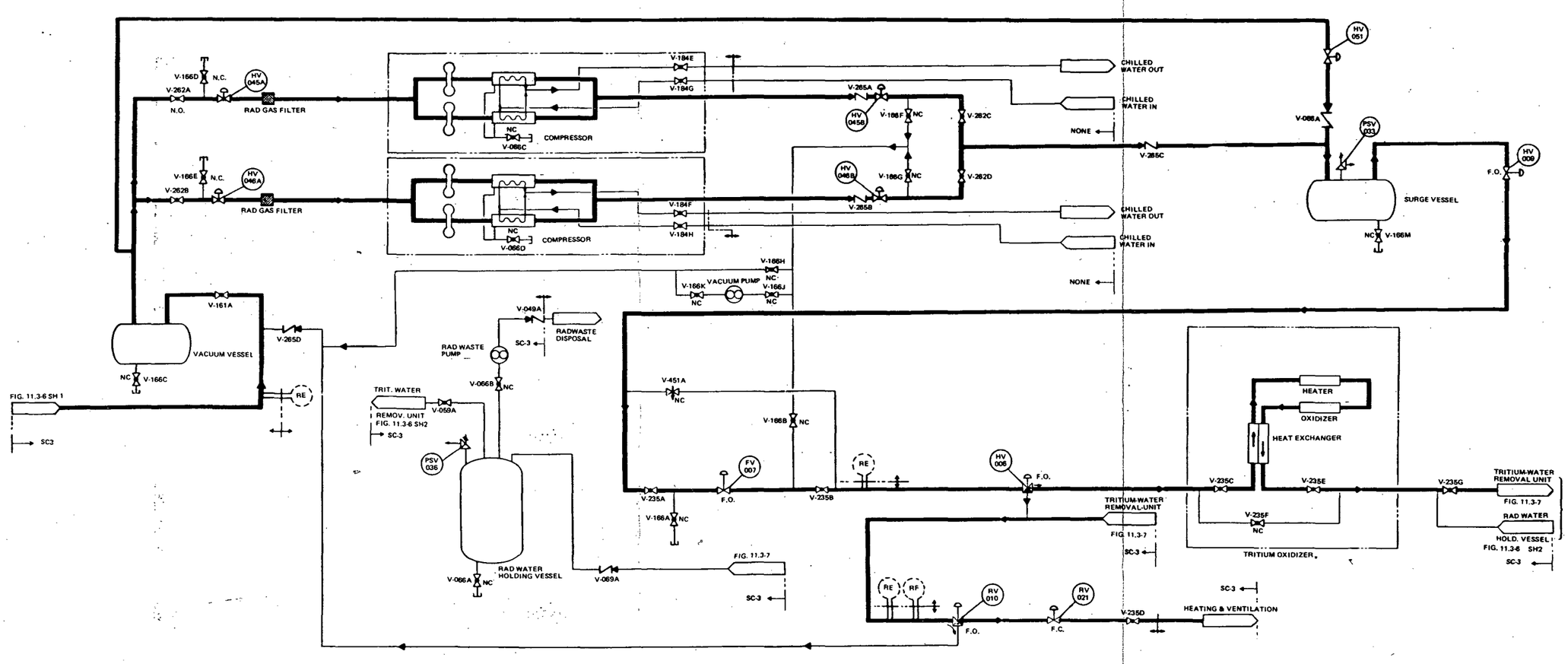

Figure 11.3-6 Flow Diagram - CAPS
(Sheet 2 of 2)

Amend. 64
Jan. 1982

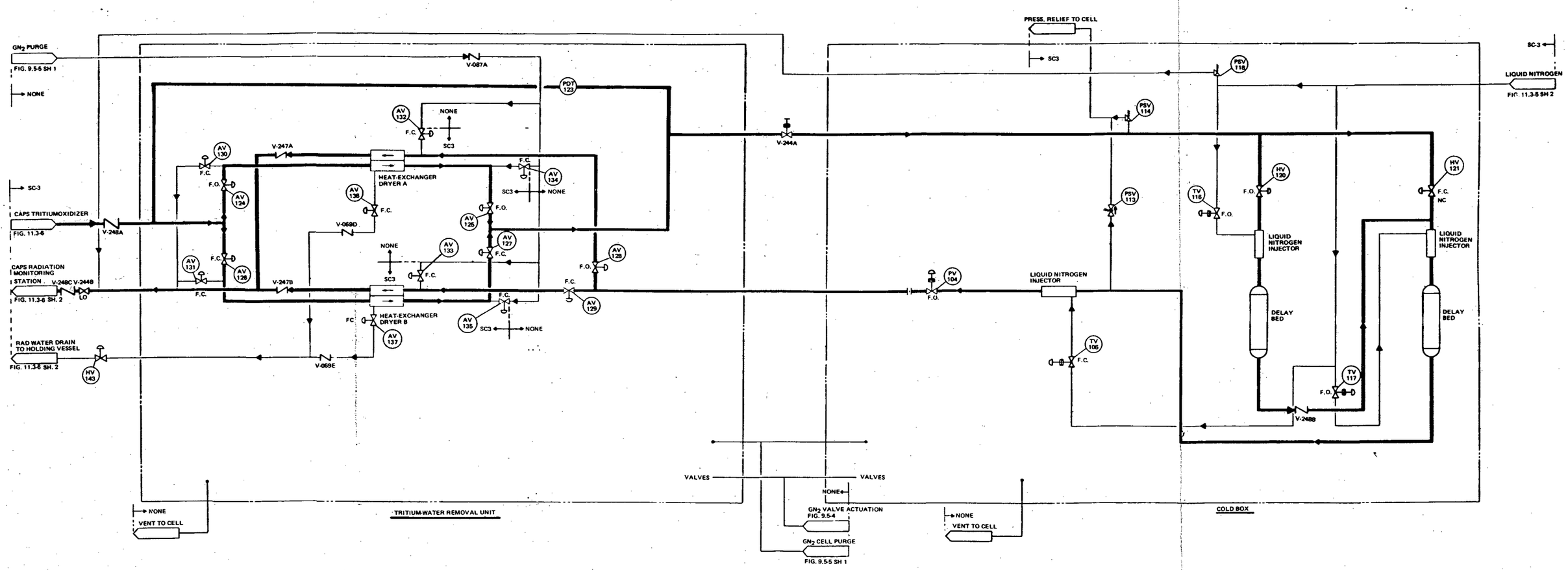

Figure 11.3-7 Flow Diagram - CAPS

Amend. 64
Jan. 1982

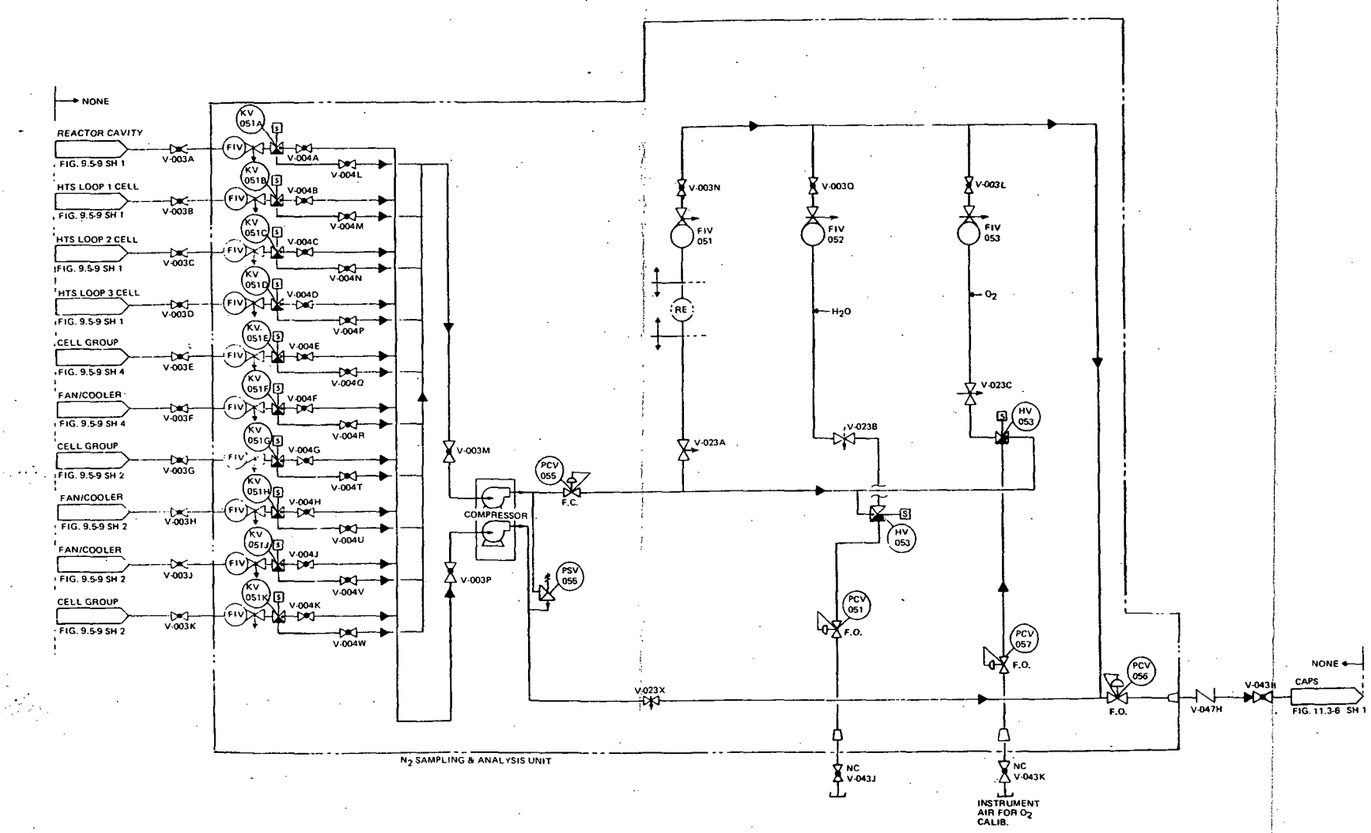

Figure 11.3-8 RCB N_2 Sampling and Analysis

Amend. 64
Jan. 1982

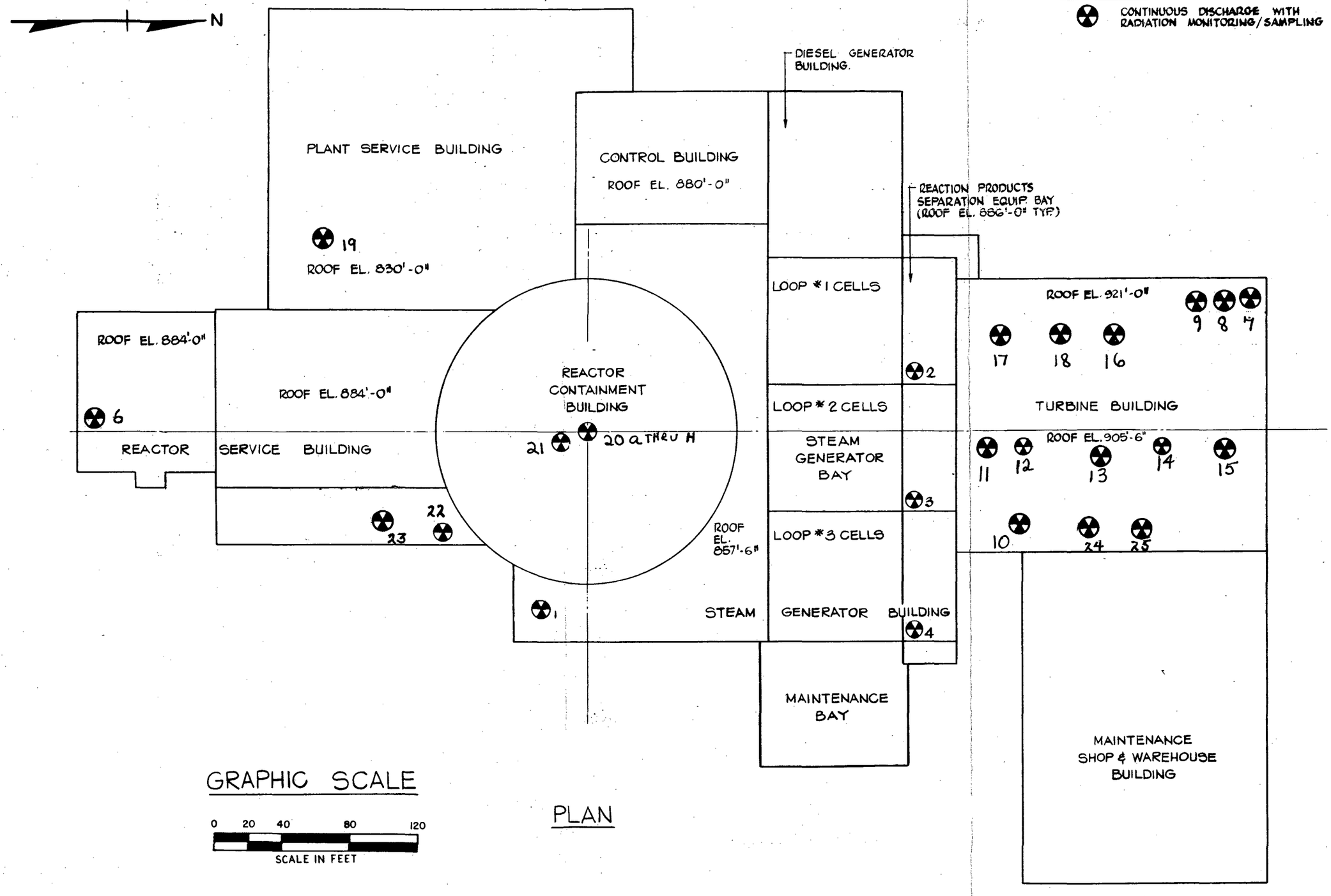

Figure 11.3-9 CRBRP Design Radiological Release Points to Atmosphere

Amend. 64*
Jan. 1982

50

Figures 11.3-10 thru 11.3-13 have been deleted.

THIS PAGE IS AN OVERSIZED DRAWING OR FIGURE,

THAT CAN BE VIEWED AT THE RECORD TITLED:

Figure 11.3-11.
"P & I Diagram Radioactive Argon Process System"

WITHIN THIS PACKAGE... OR BY SEARCHING USING THE

D-01

THIS PAGE IS AN OVERSIZED DRAWING OR FIGURE,

THAT CAN BE VIEWED AT THE RECORD TITLED:

Figure 11.3-12
"P & I Diagram Cell Atmosphere Processing System"

WITHIN THIS PACKAGE... OR BY SEARCHING USING THE

D-02

THIS PAGE IS AN OVERSIZED DRAWING OR FIGURE,

THAT CAN BE VIEWED AT THE RECORD TITLED:

Figure 11.3-13
"P & I Diagram Cell Atmosphere Processing System"

WITHIN THIS PACKAGE... OR BY SEARCHING USING THE

D-03X

APPENDIX 11.3A DOSE MODELS: GASEOUS EFFLUENTS

EXTERNAL DOSE TO MAN FROM RADIOACTIVE CLOUD

The external dose to the body of an individual (skin dose) from a semi-infinite spherical cloud of noble gases and/or radioactive particulates is given by:

$$D_{\beta,\,r} = 0.23\ (\chi/Q) \sum_i (A)_i\ (E_\beta)_i\ (3.155 \times 10^{10}) \qquad (1)$$

where,

41 $D_{\beta,\,r}$ = Beta skin dose, mrem/yr, at distance r from source

χ/Q = Annual average meteorological dispersion factor at a downwind point of interest, sec/m^3

$(A)_i$ = Activity release rate to the environment of isotope, i, Ci/sec

$(E_\beta)_i$ = Average beta energy of isotope, i, per disintegration, as obtained from Table 11.3A-1, MeV/disintegration

3.155×10^{10} = Factor to convert $\frac{rem}{sec}$ to $\frac{mrem}{yr}$

The whole body gamma dose to an individual should be computed based on a semi-infinite spherical cloud as given by:

$$D_{\gamma,\,r} = 0.25\ (\chi/Q) \sum_i (A)_i\ (E_\gamma)_i\ (3.155 \times 10^{10}) \qquad (2)$$

where,

41 $D_{\gamma,\,r}$ = Whole body gamma dose, mrem/yr at distance r from release

(χ/Q) = Annual average meteorological dispersion factor at a downwind point of interest, sec/m^3

$(A)_i$ = Activity release rate to the environment of isotope, i, Ci/sec

$(E_\gamma)_i$ = Average gamma energy of isotope, i, per disintegration, as obtained from Table 11.3A-1, MeV

3.155×10^{10} = Factor to convert $\frac{rem}{sec}$ to $\frac{mrem}{yr}$

41 The total skin dose is a sum of the beta (eq.1) and gamma (eq.2) contributors.

For normal conditions, the whole body population dose should be culated as:

$$DP_\gamma = \sum_{r_j=0}^{50} \sum_{k=1}^{16} D_\gamma (r_j, \phi_k) \times P (r_j, \phi_k) \times 10^{-3} \qquad (3)$$

where,

DP_γ = Population dose, man-rem

$D_\gamma (r_j, \phi_k)$ = The whole body gamma dose rate to an individual from a semi-infinite spherical cloud of radioactive gases and/or particulates in the radial increment r_j, azimuthal increment ϕ_k. This dose rate will be calculated by Equation 2 with (χ/Q) dependent on azimuthal sector K

$P (r_j, \phi_k)$ = The population in radial sector r_j, azimuthal sector ϕ_k

10^{-3} = Factor to convert mrem to rem.

A summation over all radial and azimuthal sectors will then provide an estimate of the total population exposure DP_γ from 0 to 50 miles in units of man-rem.

INHALATION DOSE TO MAN

For normal operating conditions, the inhalation dose to the whole body and to various organs of an individual from inhalation of radionuclides is given by the equation:

$$D_{Inh} = (\chi/Q) \sum_i (A)_i \left(\frac{MPD}{MPC_a}\right)_i (CD) \qquad (4)$$

where,

D_{Inh} = The dose rate from inhalation of isotope, i, mrem/yr

χ/Q = Annual average meteorological dispersion factor at a downwind point of interest, sec/m3

$(A)_i$ = Activity release rate to the environment of isotope, i, Ci/sec

$\left(\frac{MPD}{MPC_a}\right)_i$ = Dose conversion factor, mrem/yr per μCi/cc, which is the maximum permissible dose (MPD) per year divided by the maximum permissible concentration in air (MPC_a) for isotope, i. Dose conversion factors for calculating internal doses via the inhalation pathway are tabulated in

Table 11.3A-2. These factors assume an average breathing rate for an adult "reference man" in a 24-hour period of 2.32×10^{-4} m^3/sec implicit in the $(MPD/MPC_a)_i$ evaluation based on continuous exposure.

(CD) = A factor to account for cloud depletion as a function of the downwind distance (r) and the height of the release (h). R = 1.0 for all elements except iodine. (Ref. 1)

INTERNAL DOSES TO MAN FROM DRINKING WATER CONTAMINATED BY GASEOUS FALLOUT

The concentration C(I) of airborne particulates with half-lives >8 days from fallout to nearby waters (such as reservoirs) is calculated as follows:

$$C(I)_i = (A)_i \times (\chi/Q) \times (VDW)_i \times \frac{(TRN)_i}{0.693} \times \frac{0.865 \times 10^5}{DEPT} \left[1 - \exp\left(\frac{-0.693\ TD}{(TRN)_i}\right)\right] \quad (5)$$

where,

$C(I)_i$ = Concentration of activity of isotope, i, in water, Ci/m^3 or $\mu Ci/cc$

$(A)_i$ = The activity release rate to the environment of isotope, i, Ci/sec

χ/Q = Annual average meteorological dispersion factor at a downwind point of interest, sec/m^3

$(VDW)_i$ = Deposition velocity over water of isotope, i, m/sec. Values are tabulated in Table 11.3A-6

$(TRN)_i$ = Radioactive half-life of isotope, i, days. Values are tabulated in Table 11.3A-1.

DEPT = Depth of the water, m

TD = Duration of dry deposition, days

0.865×10^5 = Sec/day.

The annual doses from drinking water from the reservoir with concentration C(I) as defined above are:

41

$$DWR = \sum_i C(I) \left(\frac{MPD}{MPC_w}\right)_i \left[\exp\left(\frac{-0.693\ TT}{(TRN)_i}\right)\right] (HPF)\ (DF) \quad (6)$$

Amend. 41
Oct. 1977

where,

DWR = Dose rate from ingestion of isotope, i, mrem/yr

C(I) = Concentration of activity of isotope, i, μCi/cc

$\left(\frac{MPD}{MPC_w}\right)_i$ = Dose conversion factor, mrem/yr per μCi/cc, which is the maximum permissible dose (MPD) per year divided by the maximum permissible concentration in water (MPC_w) for isotope, i. Dose conversion factors for calculating internal doses are tabulated in Table 11.2A-5. These factors assume an average intake of 2,200 cc/day.

TT = Elapsed time between removal of water from reservoir and ingestion, days

$(TRN)_i$ = Radioactive half-life of isotope, i, days. Values are tabulated in Table 11.3A-1.

HPF = Fraction of the year which water is ingested from the contaminated reservoir, $\leq$ 1.0.

DF = Dilution factor in receiving water, $\leq$ 1.0.

41

INTERNAL DOSES TO MAN FROM INGESTING LEAFY VEGETABLES CONTAMINATED BY GASEOUS FALLOUT

The concentration of radioactive materials on leafy vegetables is calculated as:

$$(CLV)_i = \left(\frac{1}{YC}\right)\left[\frac{(TW)_i}{0.693}\right]\left[1 - \exp\left(\frac{-0.693\ TGS}{(TW)_i}\right)\right] \times (W)_i \times 10^6 \qquad (7)$$

where,

$(CLV)_i$ = The concentration of isotope, i, in leafy vegetables, μCi/kg

YC = The yield per unit of cultivated land area for leafy vegetable, kg/m^2. Data is presented in Table 11.3A-6.

$(TW)_i$ = Environmental half-life of isotope, i, days. Calculate using the following relationship:

41

$$TW = \frac{T_p\ T_b}{T_p + T_b} \quad \text{(tabulated in Table 11.3A-5)}$$

where,

T_p = Radioactive half-life of isotope

T_b = Weathering half-life of isotope (time taken for half the radioactivity deposited on leaves of vegetation to be removed by weather factors such as rain, wind, freezing, thawing, etc.)

41

Amend. 41
Oct. 1977

TGS = Length of growing season for leafy vegetables, days. Data is presented in Table 11.3A-6.

$$(W)_i = (A)_i (\chi/Q)(VDL)_i \times 0.865 \times 10^5$$

where,

$(W)_i$ = Deposition rate, Ci/m^2-day

$(A)_i$ = Activity release rate to the environment of isotope, i, Ci/sec

χ/Q = Annual average meteorological dispersion factor at a downwind point of interest, sec/m^3

$(VDL)_i$ = Deposition velocity over land of isotope, i, m/sec. Values are presented in Table 11.3A-6.

0.865×10^5 = Factor to convert days to seconds

10^6 = Factor to convert Ci to μCi.

Internal doses to an individual from eating leafy vegetables contaminated from gaseous fallout at a concentration (CLV) are:

$$DLV = \sum_i (CLV)_i \ (TLV) \left[\frac{\left(\frac{MPD}{MPC_w}\right)_i}{2200} \right] \left[\exp\left(\frac{-0.693 \ TDL}{(TRN)_i} \right) \right] (FL) \qquad (8)$$

where,

DLV = Dose rate from ingestion of leafy vegetables, mrem/yr

$(CLV)_i$ = Concentration of leafy vegetables of isotope, i, μCi/kg

TLV = Total daily intake of leafy vegetables, kg/day

$\left(\frac{MPD}{MPC_w}\right)_i$ = Dose conversion factor, mrem/yr per μCi/cc, which is the maximum permissible dose (MPD) per year divided by the maximum permissible concentration in water (MPC_w) for isotope, i. Dose conversion factors for calculating internal doses are tabulated in Table 11.2A-5.

TDL = Elapsed time between harvest and ingestion, days. Data is presented in Table 11.3A-6.

$(TRN)_i$ = Radioactive half-life of isotope, i, days. Values are tabulated in Table 11.3A-1.

FL = Fraction of the year leafy vegetables are grown, ≤ 1.0

2200 = Assumed average intake of water, cc/day.

Doses should be calculated separately for each kind of leafy vegetable ingested and summed to obtain a total dose from ingestion of leafy vegetables contaminated by gaseous effluents. For CRBRP, a single category "leafy vegetables" is considered. 41

INTERNAL DOSES TO MAN FROM INGESTION OF CONTAMINATED MILK

The concentration of radioisotopes in milk as a result of deposition of gaseous materials on pasture and subsequent ingestion by dairy cows is calculated as:

$$C = (G)\ (W)_i \left[\frac{(TW)_i}{0.693}\right] (SUMFT)\ \ (GF) \qquad (9)$$

where,

C = Concentration of isotope in milk, μCi/l

G = Effective grazing area of a cow, m^2. Data is presented in Table 11.3A-6.

$$(W)_i = (A)_i\ (\chi/Q)\ (VDL)_i \times 0.865 \times 10^5 \times 10^6$$

where,

$(W)_i$ = Deposition rate, $\mu Ci/m^2$-day

$(A)_i$ = Activity release rate to the environment of isotope, i, Ci/sec.

χ/Q = Annual average meteorological dispersion factor at a downwind point of interest, sec/m^3

$(VDL)_i$ = Deposition velocity over land of isotope, i, m/sec. Data is presented in Table 11.3A-6.

0.865×10^5 = Factor to convert days to seconds

10^6 = Factor to convert Ci to μCi

GF = Fraction of the year that a cow grazes on contaminated pasture

$(TW)_i$ = Environmental half-life of isotope, i, days. Calculate using the following relationship:

$$TW = \frac{T_p \, T_b}{T_p + T_b}$$

where,

T_p = Radioactive half-life of isotope

T_b = Weathering half-life of isotope

Values of $(TW)_i$ are tabulated in Table 11.3A-5.

SUMFT - Accumulative fractional intake of isotope per liter which is transferred to the milk each day, $\leq$1.0/liter. Data is presented in Table 11.3A-6.

The resulting doses to an adult from ingestion of the contaminated is calculated as follows:

$$DTMA = \frac{(C)\,(GWM)\left(\frac{MPD}{MPC_w}\right)_i}{GWA} \qquad (10)$$

DTMA = Dose rate from ingestion of contaminated milk, mrem/yr

C = Concentration of isotope in milk, μCi/l

$\left(\frac{MPD}{MPC_w}\right)_i$ = Dose conversion factor, mrem/yr per μCi/cc, which is the maximum permissible dose (MPD) per year, divided by the maximum permissible concentration in water (MPC_w) for isotope, i. Dose conversion factors for calculating internal doses are tabulated in Table 11.2A-5.

GWA = Daily intake of water by an adult, cc/day. Assume a value of 2200 cc/day.

GWM = Daily intake of milk by an adult or child, liter per day. Assumed to be 1 liter per day.

INTERNAL DOSES TO MAN FROM INGESTION OF BEEF CONTAMINATED BY GASEOUS FALLOUT

The concentration of radioactive materials in the meat of the beef cattle at butchering is calculated as:

41 $$(C_B)_i = (G)\ (W)_i \left[\frac{(TW)_i}{0.693}\right] (SUMFT)_B \qquad (11)$$

where,

$(C_B)_i$ = The concentration of isotope, i, in beef, Ci/kg

G = Effective grazing area of cattle, m^2. Data is presented in Table 11.3A-6.

$(W)_i = (A)_i\ (\chi/Q)\ (VDL)_i \times 0.865 \times 10^5$

where,

$(W)_i$ = Deposition rate, Ci/m^2-day

$(A)_i$ = Activity release rate to the environment of isotope, i, Ci/sec

χ/Q = Annual average meteorological dispersion factor at a downwind point of interest, sec/m^3

$(VDL)_i$ = Deposition velocity over land of isotope, i, m/sec. Values are presented in Table 11.3A-6.

0.865×10^5 = Sec/day

$(TW)_i$ = Environmental half-life of isotope, i, days. Calculate using the following relationship:

$$TW = \frac{T_p\ T_b}{T_p + T_b}$$

where,

T_p = Radioactive half-life of isotope

T_b = Weathering half-life of isotope

Values of $(TW)_i$ are tabulated in Table 11.3A-5.

$(SUMFT)_B$ = Total cumulative fraction of isotope, i, transferred per kg of beef, ≤ 1.0/kg. Values are tabulated in Table 11.3A-6.

FA = Average fraction of the ground surface covered by vegetation, ≤ 1.0. Data is presented in Table 11.3A-6.

The internal doses to humans from ingestion of contaminated beef are:

$$D_B = \sum_i (C_B)_i \, (GF) \left[\frac{\left(\frac{MPD}{MPC_w}\right)_i}{2200} \right] (TB) \left[\exp\left(\frac{-0.693 \; TDB}{(TRN)_i} \right) \right] \times 10^6 \qquad (12)$$

where,

D_B = Dose rate from ingestion of contaminated beef, mrem/yr

$(C_B)_i$ = Concentration in beef of isotope, i, Ci/kg

GF = Fraction of the year in which beef cattle graze on contaminated pasture, ≤ 1.0

$\left(\frac{MPD}{MPC_w}\right)_i$ = Dose conversion factor, mrem/yr per μCi/cc, which is the maximum permissible dose (MPD) per year divided by the maximum permissible concentration in water (MPC_w) for isotope, i. Dose conversion factors for calculating internal doses are tabulated in Table 11.2A-3.

41

TB = Total daily human intake of beef, kg/day. Data is presented in Table 11.3A-6.

TDB = Elapsed time between butchering and ingestion, days. Data is presented in Table 11.3A-6.

$(TRN)_i$ = Radioactive half-life of isotope i

2200 = Assumed average intake of water for an adult, cc/day

41 10^6 = Factor to convert C_i to uC_i

Population Dose to Man From Ingestion of Contaminated Milk (CRBRP)

The same formulation as given in Appendix A to Section 11.3, Equation 9, p. 11.3A-6 was utilized to calculate the concentration in milk, C_J:

Thus $$C_J = (GE)\,(W_J)\,\frac{T_{WJ}}{0.693}\,(SUMFT)_J\,GF$$

Where $$W_J = Q_J \times \overline{(\chi/Q)} \times (VDL)_J \times 0.865 \times 10^5 \times 10^6,$$

with symbology being identical to equation 9 and

$\overline{(\chi/Q)}$ = the annual average dispersion factor, averaged by county for the region 10 to 50 miles radius from the CRBRP. Within a ten mile radius of the CRBRP, χ/Q is taken for each farm where cows are located (CRBRP Environmental Report, Table 2.7-23).

The population dose, DPMA, for the milk gaseous emission pathway was calculated, for the population within a 50 mile radius of the plant, by:

$$DPMA = \sum_{\substack{\text{all cows}\\ \text{within}\\ \text{10 miles}}} \frac{C_J \times NCF \times (12.6) \times PDPC_W \times 0.31}{GMA} + \sum_{\substack{\text{all counties}\\ \text{10-50 miles}}} \frac{C_J \times NCC \times (12.6) \times PDPC_W \times 0.31}{GMA}$$

where,

- NCF = numbers of cows on a farm
- NCC = numbers of cows in a county
- 12.6 = average daily milk production, liters per cow, based on U.S. production rate of 10125 lb/year (Ref. 15)
- $PDPC_W$ = dose rate (10CF20) ÷ MPC
- 0.31 = average daily intake of milk by an individual (Ref. 16), liters per day
- GMA = daily intake of milk to develop maximum individual dose, one liter per day

Population Doses to Man from Ingestion of Contaminated Beef (CRBRP)

$$DPBA = (D_8)_{max} \times \frac{(ING)_{av}}{(ING)_{max}} \times 9.7 \left[\left(\sum NBF_i \times \frac{(\chi/Q)i}{(\chi/Q)_{max}} \right) + \left(\sum NBC_k \times \frac{\overline{(\chi/Q)}\,k}{(\chi/Q)_{max}} \right) \right]$$

where DPBA = Population Dose, within a 50 mile radius, man-rem per year

DB_{max} = The maximum individual dose as presented in PSAR section 11.3, 7.43×10^{-5} rem

$(ING)_{av}$ = Average ingestion of beef, 0.14 kg/day (Ref. 15).

9.7 = Number of persons supplied one full year from a 500 kg steer

$(ING)_{max}$ = Ingestion Rate assumed for maximum individual dose, 0.40 kg/day.

NBF = Number of beef cattle at each $farm_i$ within the 10 mile radius (ER, Table 2.7-23)

χ/Q_i = Annual Average Dispersion Factor at each farm

NBC_K = The number of steers per $county_K$ in the 10-50 mile range (Ref. 17).

$\overline{\chi/Q_K}$ = The Annual Average Dispersion Factor, averaged by county, as previously defined.

Population Doses to Man from Ingestion of Contaminated Vegetables (CRBRP)

$$DPLV = (DLV)_{max} \times \frac{(\chi/Q)_{av}}{(\chi/Q)_{max}} \times \frac{VTI}{(ING)_{av}}$$

where DPLV = Population Dose due to leafy vegetables, man-rem per year

$(DLV)_{max}$ = Maximum Individual dose due to leafy vegetables (eq. 8)

$(\chi/Q)_{av}$ = Area Weighted Average of χ/Q for the 50 mile radius, 6.6×10^{-8} sec/m^3

$(\chi/Q)_{max}$ = Atmospheric Dispersion factor associated with $(DLV)_{max}$

41

VTI = Estimated yield of vegetables with the 50 mile radius of the plant site, 2.7×10^6 kg/year.

(ING) = "Average Ingestion Rate, 0.2 kg/day, of leafy vegetables

Population Dose to Man From Inhalation

$$DPIH = \sum_{r_j=0}^{50} \sum_{k-1}^{16} D_{INH} (r_j, \phi_k) \times p (r_j, \phi_k) \times 10^{-3}$$

DPIH = Population Dose, man-rem per year

DINH = Inhalation Dose rate to an individual in radial increment j, azimuthal increment K; as calculated by equation (4), mr per year.

$P(r_j, d_k)$ = Population in radial sector J and azimuthal sector K.

Population Doses to Man from Ingestion of Contaminated Water Due to Fallout

$$DPW = (DWR) \times \sum_i \frac{ING_i}{ING_{max}} \frac{(x/Q_i)}{(x/Q_{max})} \times P_i$$

DPW = Population dose, man-rem per year

DWR = Maximum Individual Dose as calculated by equation (6)

ING_i = Individual Ingestion Rate Assumed for $Reservoir_i$, 2200 cc/day

ING_{max} = Ingestion Rate involved in developing equation (6), 2200 cc/day

$(x/Q)_i$ - Atmospheric dispersion factor ar $reservoir_i$

$(x/Q)_{max}$ = Atmospheric dispersion factor used to develop DWR

41 P_i = Population Served by $Reservoir_i$

REFERENCES - APPENDIX 11.3A

1. Final Environmental Statement Concerning Proposed Rule Making Action: Numerical Guides for Design Objectives and Limiting Conditions for Operation to meet the Criterion "As Low as Practicable" for Radioactive Material in Light-Water-Cooled Nuclear Power Reactor Effluents, WASH-1258, US Atomic Energy Commission, July 1973.

2. Lederer, C. M. Hollander, J. M. and Perlman I., Table of Isotopes, Sixth Edition, John Wiley & Sons, Inc., 1967.

3. Martin, M. J., Radioactive Atoms-Supplement 1, ORNL-4923, November, 1973, 33 pages.

4. Berger, J. J., National Bureau of Standards, Beta-Ray Dose in Tissue Equivalent Material Immersed in a Radioactive Cloud, Health Physics, Vol. 26, January 1974 pp 1-12.

5. International Commission on Radiological Protection, ICRP Publication 2, Report of Committee II on Permissible Dose for Internal Radiation, Pergamon Press, 1959

6. Tritium, Edited by Moghissi, A. A. and Carter M. W., Messenger Graphics, Publishers, Phoenix, Arizona and Las Vegas, Nevada; Registered by TID, Oak Ridge, Tennessee as CONF-710809, May, 1973.

7. Telecon, Van Vleck L. D., Westinghouse Environmental Systems Dept. to Valique P. AEC, National Reactor Testing Site, Idaho Falls, Idaho regarding Noble Cases Symposium, Las Vegas, Nevada, September 24-28, 1973.

8. Healy, J. W., Radioactive Cloud Dose Calculations, Meteorology and Atomic Energy, 1968, p. 421.

9. Owens, M. J. and Powell, A. W., Deposition Velocity of Sulfur Dioxide on Land and Water Surfaces using 35-S Tracer Method, Atmospheric Environment, Vol. 8, Feb. 1974 pp 63-67.

10. Fletcher J. F. and Dotson W. F., Hermes - A Digital Computer Code for Estimating Radiological Effects from the Nuclear Power Industry, HEDL-TME-71-168, UC-80, Westinghouse Hanford Company, Richland, Washington, Dec. 1971.

11. Witherspoon, J. P., Field Studies of Fallout Retention by Plants, Proc. of a Symposium, Survival of Food Crops and Livestock in the Event of Nuclear War, US AEC Office of Information Sciences, December 1971.

12. Bartlett, B. O., Middleton L. F., Milbourn, G. M., and Squire H. M., "The Removal of Fission Products from Grass by Rain", in Surveys of Radioactivity in Human Diet and Experimental Studies, British Report, ARCRL-5, 1961, pp. 51-54.

13. Environmental Analysis of the Uranium Fuel Cycle, Part II - Nuclear Power Stations, US Environmental Protection Agency, Washington D. C., November 1973.

14. Proc. of Fifth Annual Health Physics Society Midyear Topical Symposium, Health Physics Aspects of Nuclear Facility Siting, Vol. II, Idaho Falls, Idaho, November, 1970.

15. Handbook of Agricultural Charts, Handbook #477, US Dept. of Agriculture, Oct. 1974.

16. Economics Research Service, Dept. of Agriculture, Statistical Reporting Service, Civilian Consumption of Major Foodstuff per Person (1973), p. 433.

17. Tenessee Statistical Abstract - 1971, Edited by M.G. Currence, Center for Business and Economic Research, University of Tenessee, Knoxville, Tenessee.

41

TABLE 11.3A-1

RADIOLOGICAL DATA FOR ISOTOPES RELEASED FROM CRBRP RADWASTE SYSTEMS

Isotope	Radioactive Half-life (Ref. 2) (Days)	Total Gamma Energy (Refs. 2, 3) (MeV/dis)	Average Beta Energy (Refs. 2, 4) (MeV/dis)
H-3	4.49×10^{3}	0.0	0.006
Na-22	9.49×10^{2}	2.195	0.182
Na-24	6.25×10^{-1}	4.123	0.463
Ne-23	4.40×10^{-4}	0.160	1.460
Ar-39	9.80×10^{4}	0.0	0.188
Ar-41	7.60×10^{-2}	1.280	0.406
Cr-51	2.78×10^{1}	0.029	0.105
Mn-54	3.03×10^{2}	0.835	0.276
Fe-59	4.56×10^{1}	1.190	0.116
Co-58	7.13×10^{1}	0.977	0.024
Co-60	1.92×10^{3}	2.510	0.105
Kr-83m	7.80×10^{-2}	0.002	0.036
Kr-85	3.93×10^{3}	0.002	0.230
Kr-85m	1.82×10^{-1}	0.158	0.277
Kr-87	5.30×10^{-2}	0.793	1.324
Kr-88	1.16×10^{-1}	1.950	0.376
Sr-89	5.27×10^{1}	8.2×10^{-5}	0.488
Sr-90	1.01×10^{4}	0.0	0.182
Y-89m	1.86×10^{-4}	0.910	0.297
Y-90	2.67×10^{0}	0.0	0.930
Y-91	5.88×10^{1}	0.004	0.515
Zr-95	6.55×10^{1}	0.725	0.130
Nb-95	3.50×10^{1}	0.765	0.053
Mo-99	2.80×10^{0}	0.137	0.410
Ru-103	3.95×10^{1}	0.474	0.077
Ru-106	3.68×10^{2}	0.0	0.013
Rh-106	3.50×10^{-4}	0.200	1.180

TABLE 11.3A-1 (Continued)

Isotope	Radioactive Half-life (Ref. 2) (Days)	Total Gamma Energy (Refs. 2, 3) (MeV/dis)	Average Beta Energy (Refs. 2, 4) (MeV/dis)
Ag-111	7.50×10^{0}	0.023	0.350
Sb-125	9.90×10^{2}	0.121	0.335
Te-129	4.80×10^{-2}	0.098	0.499
Te-129m	3.41×10^{1}	0.041	0.621
Te-132	3.24×10^{0}	0.216	0.100
I-131	8.05×10^{0}	0.371	0.197
I-132	9.60×10^{-2}	2.400	0.448
Xe-131m	1.18×10^{1}	0.020	0.143
Xe-133	5.27×10^{0}	0.045	0.135
Xe-133m	2.26×10^{0}	0.042	0.189
Xe-135	0.38×10^{0}	0.247	0.316
Xe-135m	1.08×10^{-2}	0.432	0.095
Xe-138	1.21×10^{-2}	1.183	0.612
Cs-134	7.47×10^{2}	1.590	0.166
Cs-136	1.37×10^{1}	2.230	0.139
Cs-137	1.10×10^{4}	0.563	0.246
Ba-140	1.28×10^{1}	0.236	0.284
La-140	1.70×10^{0}	2.120	0.397
Ce-141	3.25×10^{1}	0.070	0.315
Ce-144	2.84×10^{2}	0.016	0.101
Pr-143	1.36×10^{1}	0.0	0.310
Pr-144	1.19×10^{-2}	0.030	0.997
Nd-147	1.11×10^{1}	0.122	0.335
Pm-147	9.56×10^{2}	0.0	0.070
Eu-155	6.61×10^{2}	0.049	0.075
Ta-182	1.15×10^{2}	1.133	0.877
Pu-238*	3.14×10^{4}	9.8×10^{-6}	0.032
Pu-239*	8.90×10^{6}	2.9×10^{-5}	0.036

TABLE 11.3A-1 (Continued)

Isotope	Radioactive Half-life (Ref. 2) (Days)	Total Gamma Energy (Refs. 2, 3) (MeV/dis)	Average Beta Energy (Refs. 2, 4) (MeV/dis)
Pu-240*	2.40×10^{6}	1.3×10^{-7}	0.022
Pu-241	4.80×10^{3}	2.3×10^{-7}	0.007
Pu-242*	1.38×10^{8}	0.0	0.0

*Decay is primarily by alpha emission. Total alpha energies, MeV/dis, for the plutonium isotopes are as follows:

1. Pu-238 - 5.49
2. Pu-239 - 5.10
3. Pu-240 - 5.16
4. Pu-242 - 4.89

TABLE 11.3A-2

41 DOSE CONVERSION FACTORS* FOR EXPOSURE TO RADIOACTIVE MATERIALS RELEASED FROM THE CRBRP GASEOUS RADWASTE SYSTEM

41

Isotope	Whole Body ** (mrem/yr per μCi/cc)
H-3	1.7×10^{9}
Ne-23	1.7×10^{10}
Ar-39	5.0×10^{12}
Ar-41	1.7×10^{10}
Kr-83m	1.7×10^{10}
Kr-85	1.7×10^{9}
Kr-85m	5.0×10^{9}
Kr-87	2.5×10^{10}
Kr-88	2.5×10^{10}
Xe-131m	1.3×10^{9}
Xe-133	1.7×10^{9}
Xe-133m	1.7×10^{9}
Xe-135	5.0×10^{9}
Xe-135m	5.0×10^{12}
Xe-138	1.7×10^{10}

*Calculated from data tabulated in Table 11.3A-3, maximum permissible dose ÷ maximum permissible concentration in air, $\left(\frac{MPD}{MPC_a}\right)$

** Except for tritium, dose conversion factors are considered = 0 for inhalation pathway. Such values are given to represent constants used to calcualte an external submersion dose.

41

TABLE 11.3A-3

MAXIMUM PERMISSIBLE CONCENTRATION IN AIR (MPC_a)* FOR CONTINUOUS EXPOSURE TO RADIONUCLIDES RELEASED FROM THE CRBRP GASEOUS RADWASTE SYSTEM BASED ON (REF. 5)

25

Isotope	Whole Body (μCi/cc) ++
H-3	3×10^{-6}
Ne-23	3×10^{-7}†
Ar-39	1×10^{-9}†
Ar-41	4×10^{-7}†
Kr-83m	3×10^{-7}†
Kr-85	3×10^{-6}**
Kr-85m	1×10^{-6}**
Kr-87	2×10^{-7}**
Kr-88	2×10^{-7}†
Xe-131m	4×10^{-6}**
Xe-133	3×10^{-6}**
Xe-133m	3×10^{-6}†
Xe-135	1×10^{-6}**
Xe-135m	1×10^{-9}†
Xe-138	3×10^{-7}†

41

*MPC_a for soluble compounds

**MPC_a in 10CFR20, Table II, column 1 are based upon a maximum permissible dose of 1/10 of the occupational exposure levels reported in ICRP-2 (Ref. 5).

†MPC_a is calculated from data presented in 10CFR20, Appendix B, Table II, column 1

++Values only utilized for dose modelling in determination of dose conversion factors.

25

TABLE 11.3A-4

WHOLE BODY DOSE CONVERSION FACTORS FOR TRITIUM RELEASED DURING NORMAL OPERATING CONDITIONS (REF. 6)

Pathway	Infant	Adult
	(mrem/yr per μCi/cc)	
Inhalation and absorption	8.9×10^8	1.6×10^9
Vegetables, ingestion	2.0×10^9	1.6×10^9
Milk, ingestion	3.4×10^9	5.7×10^8
Meat, ingestion	3.0×10^8	7.2×10^8

TABLE 11.3A-5

ENVIRONMENTAL HALF-LIVES OF RADIOISOTOPES
RELEASED FROM CRBRP RADWASTE SYSTEMS

Isotope	Environmental Half-Life (Days)
H-3	14.0
Na-22	13.4
Na-24	0.6
Ne-23	4.4×10^{-4}
Ar-39	14.0
Ar-41	0.1
Cr-51	9.3
Mn-54	13.4
Fe-59	10.7
Co-58	11.7
Co-60	13.9
Kr-83m	0.1
Kr-85	14.0
Kr-85m	0.2
Kr-87	0.5
Kr-88	0.1
Sr-89	11.1
Sr-90	14.0
Y-89m	1.9×10^{-4}
Y-90	2.2
Y-91	11.3
Zr-95	11.5
Nb-95	10.0
Mo-99	2.3
Ru-103	10.3
Ru-106	13.5
Rh-106	3.5×10^{-4}
Ag-111	4.9

TABLE 11.3A-5 (Continued)

Isotope	Environmental Half-Life (Days)
Sb-125	13.8
Te-129	0.05
Te-129m	9.9
Te-132	2.6
I-131	5.1
I-132	0.1
Xe-131m	6.4
Xe-133	3.8
Xe-133m	1.9
Xe-135	5.6
Xe-135m	7.4
Xe-138	1.0×10^{-3}
Cs-134	13.7
Cs-136	6.9
Cs-137	14.0
Ba-140	6.7
La-140	1.5
Ce-141	9.8
Ce-144	13.3
Pr-143	6.9
Pr-144	0.02
Nd-147	6.2
Pm-147	13.8
Eu-155	13.7
Ta-182	14.0
Pu-238	14.0
Pu-239	14.0
Pu-240	14.0
Pu-241	14.0
Pu-242	14.0

TABLE 11.3A-6

SUMMARY OF VARIABLES USED IN RADIOLOGICAL DOSE EVALUATIONS WHICH ARE NOT SPECIFIC TO THE CRBRP

Variable	Description	Measurement
Ingestion of Leafy Vegetables		
VDW	Deposition velocity of isotope over water	Noble gases, 0.5×10^{-7} cm/sec (Ref. 7) H-3, 5 cm/sec (Refs. 8, 9)
YC	Yield per unit of cultivated land area for leafy vegetables	1.5 kg/m^2 (Ref. 10)
TGS	Growing season of leafy vegetables	3 months (Ref. 1)
VDL	Deposition velocity of isotope over land	Noble gases, 0.5×10^{-7} cm/sec (Ref. 7) H-3, 1.4 cm/sec (Ref. 6)
TLV	Total daily intake of leafy vegetables	0.2 kg/day (Ref. 1)
TDL	Elapsed time between harvest and ingestion	7 days (Ref. 11)
T_b	Weathering half-life of isotopes on leafy vegetables	14 days (Refs. 10, 12)
FLI	Fractional retention of isotope on vegetation leaves	0.1 (Ref. 11)
Ingestion of Beef		
G	Effective grazing area of cattle	20-80 m^2/day (Ref. 13) (45 m^2 utilized)
$SUMFT_B$	Total cumulative fraction of isotope transferred per kg of beef	2×10^{-3}/kg for H-3 (ref. 10) 0.2/kg for Cs (Ref. 14) 0.05/kg for Sr (Ref. 14)

TABLE 11.3A-6 (Continued)

Variable	Description	Measurement
Ingestion of Beef (Continued		
41 TB	Total daily human intake of beef (maximum)	0.4 kg/day (Ref. 10)
41 TDB	Elapsed time between butchering and ingestion	20 days (Ref. 10)
Ingestion of Aquatic Foods*		
G_F	Rate of ingestion of aquatic food for man	50 g/day-freshwater fish (max, for adult) (Ref. 1)
Ingestion of Milk		
SUMFT	Cumulative fractional intake of isotope per liter which is transferred to milk each day	2.0×10^{-2} per liter for Tritium (Ref. 10)

*Dose Model included in Appendix 11.2A

11.4 PROCESS AND EFFLUENT RADIOLOGICAL MONITORING SYSTEM

11.4.1 Design Objectives

Process radiation monitors are provided to allow the evaluation of plant equipment performance and to measure, indicate and record the radioactive concentration in plant process and effluent streams during normal operation and anticipated operational occurrences. The monitors are provided in accordance with CRBRP (Section 3.1) Design Criterion 56.

Radiation monitoring of process systems provides early warning of equipment malfunctions, indicative of potential radiological hazards, and prevents release of activity to the environment in excess of 10CFR 20 limits. Each monitor will be equipped with a loss-of-signal instrument failure alarm and a high level alarm, (a high-high level alarm is also provided when required). These alarms alert operating personnel to channel malfunction and excessive radioactivity. Corrective action will then be manually or automatically performed.

Monitoring of liquid and gaseous effluents under normal operating conditions will be in accordance with NRC Regulatory Guide 1.21 and any activity released will be within limits established in 10CFR20.

The number, sensitivities, ranges, and locations of the radiation detectors will be determined by requirements of the specific monitored process during normal and postulated abnormal (accident) conditions. All monitors will be designed so that saturation of detectors during a severe accident condition will not cause erroneously low readings. Monitoring during severe post accident conditions will be accomplished by the high-range gamma area monitors discussed in Section 12.1.4, in conjunction with the sampling lines described in Section 11.4.2.2.1.

Radioactivity in the low level waste releases will be integrated and recorded. Control signals will be provided by the radiation monitor(s) to terminate liquid or gaseous effluent if an out-of-limit signal is recorded. The monitoring and control exerted by the process radiation monitoring equipment and the operator during any release will also be verified by periodic manual sampling and laboratory analysis in accordance with Technical Specifications. For tritiated process liquids, tritium surveillance will be by sampling and lab analysis.

All detectors will be shielded against ambient background radiation levels so that required activity measurements can be maintained. Monitors associated with accident conditions are also discussed in 3.A.3.1. Area monitors and airborne radioactivity monitors are discussed in 12.1.4 and 12.2.4, respectively. The radiological effluent sampling program is discussed in Section 11.4.3 and meets the reporting requirements of Regulatory Guide 1.21.

11.4.2 Continuous Monitoring/Sampling

11.4.2.1 General Description

The descriptive tabulation of the various continuous monitors/samplers for process and effluent radioactivity monitoring, which includes those gas and liquid monitoring devices in or associated with liquid or gas process streams considered in this discussion, is found in Table 11.4-1. The basis for selecting the locations as well as the control functions associated with the monitor, are described below.

Each continuous monitor will be equipped with power supplies, micro-processor and accessories, indication and local alarm indicator lights. Each monitor will transmit radioactivity level and alarm status information for display and logging by Radiation Monitoring equipment located in the Control Room with redundant display and logging equipment located in the Health Physics Area of the Plant Service Building. The alarms are provided to indicate instrument malfunctions or a radioactivity level in excess of the monitor's alarm setpoint. Each continuous monitor has a local indicator at the detector location to facilitate the testing and/or calibration of the equipment.

The lowest scale division of each continuous monitor's range is the maximum detector sensitivity deemed appropriate for the intended service. The range of the monitor will be a minimum of five decades above the maximum sensitivity level; and will allow for a minimum of one decade span above the monitor high-high setpoint (when high-high setpoints are employed). The effluent alarm setpoint corresponds to the alarm annunciation level dictated by the CRBRP Technical Specifications (Chapter 16.) For each monitor, a sample chamber and/or detector is selected and will be installed in such a way as to minimize sampling losses and electromagnetic and background interferences. The output of all effluent monitors will be continuously sampled and recorded by the CRBRP Plant Data Handling and Display System. The Reactor Containment Isolation Monitors (PPS), Control Room Air Intake monitors and other safety-related monitors will be powered by Class IE, redundant 120 VAC power.

11.4.2.2 Gaseous System Description

11.4.2.2.1 Post-Accident Containment Atmosphere Monitors

The capability to monitor the containment atmosphere radioactivity level following containment isolation during an accident condition shall be provided. Three pair of penetrations, located 120° apart around the containment structure will allow air samples to be taken by mobile or portable monitors and sampling equipment. The penetrations design and locations will consider the following criteria:

1. The penetration opening on the inside of containment will be positioned to obtain a representative sample.

2. The penetration opening on the outside of containment will be positioned in an accessible area to enable connection of the monitoring and/or sampling equipment.

3. Each penetration will have two isolation valves; a remote manual controlled valve inside containment and a manual, locked valve outside containment with a blind flange.

4. The penetration design will comply with CRBRP Design Criteria Numbers 45 and 47 (Section 3.1)

Each pair of penetrations can be connected to a mobile monitor which will be utilized for continuous monitoring of the containment atmosphere. The sample is withdrawn from containment, passes through the monitor for radiation detection and returned to containment. Grab samples will also be obtained for further laboratory analysis.

11.4.2.2.2 Reactor Containment Isolation Monitors

The radiation level in the head access area will be monitored by three detectors for direct gamma activity. The output of these detectors is routed to the plant protection system to initiate closure of containment isolation valves if a preset limit is reached by two out of three of the detectors.

In addition, the radiation level in containment exhaust, upstream of the isolation valves will be isokinetically monitored for gaseous activity by three gas monitors. Their output will also be provided to the PPS for initiation of containment isolation when a preset radiation level is reached by two of the three detectors.

The monitoring system will be designed to comply with IEEE 279-1971. The overall containment isolation system design and protection logic is discussed in Section 7.3. Figure 12.2-1 shows a typical block diagram of these channels and Figure 7.3-1 shows the trip logic configuration.

11.4.2.2.3 Building Ventilation Exhaust Monitors

The number and location of building exhaust plenums from which potentially radioactive plant gaseous release may emanate are: One located in the Intermediate Bay (SGB-IB), nine located near the top of the RCB dome, two located in the Reactor Service Building (RSB), one located in the Radwaste Area (Bay), one located in the Plant Service Building (PSB), fourteen in the Turbine Generator Building (TGB), and three located in the Steam Generator Building (SGB). Continuous monitoring will be performed at those exhausts which could conceivably undergo a significant increase in detectable levels in radioactivity. The remaining exhausts will be sampled periodically.

The exhaust plenum located in the IB receives ventilation exhaust air from the Intermediate Bay area. A continuous air monitor (CAM) will be provided to detect particulate, radioiodine and gaseous activity in the effluent stream. The air sample will be obtained isokinetically from the exhaust, on a continuous basis. The operation of the three-channel CAM unit is described in Section 12.2.4.2.1.

The exhaust plenum located on the Radwaste Building receives ventilation exhaust air from the radwaste area. A Continuous Air Monitor (CAM) will be provided to detect particulate, iodine and gaseous activity in the effluent stream. The air sample will be obtained isokinetically from the exhaust, on a continuous basis. The operation of the three channel CAM unit is described in Section 12.2.4.2.1.

The two RSB exhausts will be continuously monitored for radioactivity releases. The first exhaust plenum located on the RSB roof which receives ventilation exhaust from the RCB will be continuously monitored for particulates, radio gases, and radioiodine activity in the effluent stream. The second exhaust plenum located on the RSB which receives ventilation exhaust from the RSB via the RSB clean-up filtration units will also be continuously monitored for particulate, gaseous and radioiodine activity.

The exhaust plenum located near the top of the RCB dome, which receives exhaust from the Containment Clean-up and Annulus Pressure Maintenance and Filtration System will be continuously monitored for particulate, radioiodine, radiogas, and plutonium activity in the effluent stream.

The 8 exhausts located at the top of the RCB dome for the Annulus Cooling Air become potential radioactivity release points only in the event of very low probability accidents beyond the design basis (e.g., Thermal Margin Beyond the Design Base). On line monitoring for particulates, radioiodines and radiogases have been provided for these exhausts in the event of such an accident.

TGB areas will be periodically grab sampled and samples will be analyzed for tritium activity.

The exhaust in the PSB receives ventilation from the combined laboratory. Samples will be collected isokinetically by a particulate (and iodine, if required) filter and analyzed for isotopic content in the Counting Room.

Certain effluent radiation monitors are identified as Accident Monitoring Instrumentation in Table 11.4-1. As such, these monitors will meet the requirements of Section 7.5.11 of the PSAR.

The reporting of effluent radioactivity released from the CRBRP will be consistent with the guidelines established in Regulatory Guide 1.21. This reporting will be based upon the results of Counting Room analysis of effluent samples obtained at each location listed above.

11.4.2.2.4 <u>Condenser Vacuum Pump Exhaust, Deaerator Continuous Vents and Turbine Steam Packing Exhauster Tritium Samplers</u>

A gas sample will be continuously withdrawn from each one of the condenser vacuum pump air, deaerator exhaust, and turbine steam packing exhauster air into tritium samplers comprised of silica gel dessicant column to enable determination of tritium activity to indicate unacceptable tritium diffusion in the steam generators. The sample will be analyzed using liquid scintillation techniques in the counting room.

11.4.2.2.5 Control Room Inlet Air Monitors

The main and remote Control Room air intakes will each be continuously monitored by two redundant monitors. These three channel (particulate/radioiodine/radiogas) CAMs will detect radioactivity in the air intakes and will determine which intake should be used during the Control Room isolation condition. Details concerning the sequence of operation during Control Room isolation are given in Section 9.6.1.3.4.13. A fifth three channel CAM will be installed downstream of the parallel HVAC make-up air filters to monitor the performance of the HEPA filter trains. A detailed description of the operation of each of these CAM units is given in Section 12.2.4.2.1.

11.4.2.2.6 Inerted Cell Atmosphere Monitors

The capability for monitoring the atmosphere of each individual inerted cell for high radioactivity will be accomplished by three methods. One method is the sequential sampling of groups of cells with on-line gas monitors as described in 3.A.1.4.2. Each monitor shall have a trip signal determined by the process system to initiate activation of cell purging equipment. In addition, mobile particulate, iodine and gas monitors are provided to sample any individual inerted cells atmosphere, as described in 12.2.4.

Finally to provide a sensitive method of sodium leak detection, particulate monitors are provided for continuous monitoring of inerted cells within the RCB containing components contacting radioactive sodium. These monitors will alarm for activated sodium present in the cells atmosphere. The individual inerted cells that are continuously monitored for sodium leak detection are listed in Table 3.A.1-3.

11.4.2.2.7 RAPS and CAPS Monitoring

Gas monitors will be provided for the Radioactive Argon Processing System (RAPS) and Cell Atmosphere Processing System (CAPS). A monitor will be located at the CAPS inlet for controlling the rate of radioactivity input. Monitors will also be located at the output of these systems to ascertain that the radionuclide activity of the processed gas is within limits for reuse in RAPS or within 10 CFR 50, App. I and ALARA limits for those gases exhausted to the H&V system by CAPS.

11.4.2.2.8 Safety-Related Monitors

Certain monitors which provide control signals to safety related process systems or are used to monitor safety related systems are classified as safety related monitors. These monitors will be supplied with Class 1E power from redundant vital AC buses and will meet the requirements described in Section 7.1. Safety related monitors are identified in Table 11.4-1.

These monitors will each have a dedicated Display and Control Unit (DCU) in the Control Room. The DCU will also meet the requirements described in Section 7.1 and will be supplied with Class 1E power. The DCU's will be located in the back panel area of the Control Room adjacent to the Radiation Monitor Console (computer).

11.4.2.3 Liquid Systems Description

11.4.2.3.1 Radwaste Disposal System Liquid Effluent Monitor

Effluents from the Liquid Radwaste Disposal System are discharged into the cooling tower blowdown. A liquid radioactivity detector will continuously monitor, record, and control the activity released to the cooling tower blowdown stream. The blowdown flow rate available for liquid waste dilution and compliance with 10CFR20 will be considered in establishing a high radiation setpoint for this monitor. A high radiation signal will automatically close the isolation valve in the discharge line and alarm in the control room.

Frequent composite samples of the blowdown downstream of the radioactive liquid input will be taken for radionuclide determination including tritium.

11.4.2.4 Maintenance and Calibration

On completion of the monitoring system installation, each process monitor will be checked for proper operation and calibrated against a radiation check source(s) traceable back to the National Bureau of Standards or from an equally acceptable source. This initial calibration, and subsequent calibration at six month intervals will verify the electronic
541 operation of both local and Control Room indications and also all annunciation points (loss-of-signal), loss-of-sample flow, high radiation, etc. In addition, each monitor is supplied with a built-in check
6 source to provide rapid functional tests at periodic intervals.

11.4.3 Sampling

This section provides information on the CRBRP process and effluent sampling program. Process sampling provides the means for determining and monitoring various plant systems containing radioactive and potentially radioactive fluids. Effluent sampling provides the means for the reporting of radioactive releases to the environment. The effluent sampling will meet the reporting requirements of Regulatory Guide 1.21 and will provide data necessary for the semiannual report required by 10CFR50.

11.4.3.1 Process Sampling

Periodic sampling is conducted to alert the operator of any abnormal condition that may be developing. Both local and remote liquid samples are taken. Gaseous samples are taken directly at the sample station adjacent to the gas analyzer. The locations for gaseous sample instrumentation are given in Section 11.3.3.3. Operating procedures and performance tests of gaseous samples are discussed in Section 11.3.4. Sampling of primary sodium, secondary sodium, ex-vessel sodium and cover gas is discussed in detail in Section 9.8, entitled "Impurity Monitoring System". This section also discusses the location of samples, expected composition and concentration, sampling frequency and procedures.

The basis for selecting the locations for sample stations is to provide an indication of the effectiveness of key process operations. Analyses of these samples are related to the process sequence from which they were obtained to evaluate specific equipment performance.

Gaseous samples are monitored for gross activity and periodically analyzed for isotopic content. Tables 11.3-1 through 11.3-15 list inventories of the expected concentration and composition of the effluent gas samples.

Sections 11.4.3.1.1 through 11.4.3.1.5 describe in detail each of the liquid sampling points in the Radioactive Waste Systems. Sampling procedure, analytical procedure, and sensitivity for each sample point are the same and are discussed in detail in the following paragraphs.

Sampling Procedure: Samples are collected in a sampling station located on the operating floor of the radwaste building. Sample circulating lines run through this sampling station. The upstream side of the sample lines are connected to the discharge of the pumps serving the tanks. After passing through the sampling station, the circulating sample fluid is returned to the tank from which it was drawn.

Analytical Procedure and Sensitivity: The quantity of sample to be counted for gross beta-gamma is pipetted onto a planchet. The planchet is placed on a turntable and evaporated to dryness under an infrared bulb. The rotation insures a uniformly distributed dried sample for reproducible counting. The height of the infrared bulb is adjustable to obtain a moderate rate of evaporation. Counting is done by means of an internal proportional counter.

The isotopic analysis is performed by a completely automated Pulse Height Analysis System. A shielded Ge (Li) detector is used with a computer-based pulse height analysis system. The system satisfies the reporting requirements of Regulatory Guide 1.21.

Provisions will also be made for alpha and tritium assay.

11.4.3.1.1 Intermediate Level Activity Liquid Waste Collection Tanks

These tanks receive decontamination waste from the Large Component Cleaning Cell. The analysis of this waste provides a check on the decontamination procedure.

The composition is expected to be sodium hydroxide solution, nitric acid solution and water rinses. After neutralization a solution of sodium sulfate or sodium nitrate results. Activity will be ~ 1 μCi/cc.

The quantity to be measured is the gross β-γ activity.

Additional rinses would be required if the activity of the component is higher than expected. Additional passes through the purification equipment would be required if the activity of the product from the evaporator is too high. Corrective action would be taken if the DF is lower than the expected value. The expected recirculation flow through the sample line is 10 gpm.

11.4.3.1.2 Process Distillate Storage Tanks

These tanks receive the distillate from the Process Waste Evaporator. The sample provides the check on the DF of the evaporator and purity of the product to be recycled for plant uses or released to the environment after dilution with cooling tower blowdown. The composition is expected to be very dilute sodium sulfate or sodium nitrate with an activity $\sim 10^{-6}$ μCi/cc.

The quantity to be measured is the gross β-γ activity, if no excess inventory exists. If excess inventory exists and a portion of the content is to be released to the low activity liquid system, an isotopic analysis will be performed consistent with reporting requirements of Regulatory Guide 1.21. If the activity of the sample is unacceptably high, the contents of the tank are reprocessed through another evaporator-ion exchange cycle. Corrective measures would be taken if the DF is much lower than the expected value.

The expected recirculation flow through the sampling line is 10 gpm.

11.4.3.1.3 Low Level Activity Liquid Waste Collection Tanks

These tanks receive laboratory drains, floor drains, lavatory drains, and shower drains from areas that may contain radioactivity. An activity check at these points determines the possibility of the need for further processing. It also permits a check on the DF of the purification equipment by comparing it with the activity of the purified waste.

These tanks receive waste from several sources, hence the composition is not well defined. The conductivity will be measured to determine impurity level. The expected activity is 10^{-4} μCi/cc. The quantity to be measured is the gross β-γ activity.

The sampling frequency will be in accordance with reporting requirements of Regulatory Guide 1.21.

Higher sample activity indicates abnormal operations elsewhere in the plant. Corrective measures at those locations would be taken. Also, higher activity indicates that a second pass through the equipment would be required.

The expected recirculation flow of the sampling line is 10 gpm.

11.4.3.1.4 Low Level Activity Distillate Monitoring Tanks

Since these tanks are holding tanks for the purified product from the low level waste evaporator, pending release to the discharge canal, sample analysis is mandatory. The composition is expected to be equivalent to grade C water or comply with federal and state regulations and have an average activity of 10^{-8} μCi/cc.

A gross β-γ-α count is made before releasing to the environment. Tritium content will also be sampled. An isotopic analysis is performed for record purposes as required by Regulatory Guide 1.21. Sampling frequency will be determined by reporting requirements of Regulatory Guide 1.21.

High sample activity indicates the need for reprocessing the batch. Corrective measures would be taken if DF is lower than the expected level. No particular process flow is associated with this sample point.

11.4.3.1.5 Concentrated Waste Collection Tank

The material in this tank is intended to be solidified and shipped to the disposal site. To determine the type of packaging and degree of shielding required to meet the shipping regulation CFR Title 49, the analysis of sample is necessary. The composition is expected to be a solution of sodium sulfate or sodium nitrate and an activity of $\sim$50 μCi/cc. The quantity to be measured is the gross β-γ activity.

The sampling frequency will be determined in the FSAR. No process flow is associated with this sampling procedure.

11.4.3.2 Effluent Sampling

The radioactive effluents are continuously monitored or sampled as indicated in Section 11.4.2.2.3 by activity and by flow. The sampling system is designed to obtain a representative effluent sample to establish concentrations of radioactivity and to facilitate radioisotopic analysis to assure compliance with recognized codes and standards for radiation protection. The samples are taken before the effluent release to the environment. The gaseous effluents are discussed in detail in Section 11.3 and liquid effluents are discussed in Section 11.2.

The Cooling Tower blowdown, wastes and drains and other normally non-radioactive liquid effluent streams will be sampled for suspended/dissolved activity including tritium. The problem associated with continuous monitoring of low level β activity in tritium is recognized and therefore, periodic batch samples from each liquid effluent stream will be taken and analyzed in the laboratory.

Building Storm drains and Plant Service Building liquid effluents are normally non-radioactive and will not be monitored, but will be periodically sampled for radioisotopic analysis as necessary.

To satisfy Regulatory Guide 1.21 requirements for gamma spectroscopy and sensitivity, a high resolution automated radioisotopic analysis system will be provided at the plant site to facilitate precise identification and analysis of complex radionuclide concentrations.

11.4.4 Reporting

An automated Report Processor will be provided which will generate the Effluent Radioactivity Release Reports in accordance with Appendix B of NRC Regulatory Guide 1.21. This computer based processor will be interfaced with the Radiation Monitoring System Controllers and the CRBRP Environmental Computer. The Report Processor will also accept manual entry of analyses performed by the Health Physicist.

TABLE 11.4-1 PROCESS & EFFLUENT MONITORING AND SAMPLING

Description	Bldg.	Elev.	Sample or Cont.	Range (μCi/cc) UOS	Expected Concent.	Quant. Meas.	Remarks
Reactor Containment Isolation Monitors (PPS):							
-Containment Ventilation (3) Exhaust (Gaseous) CAM	RCB	842	Continuous	10^{-7}-10^{-2} Cs^{137}	See Section 11.3.2.6	Gross Concent.	Safety-related Class 1E PPS Related
-Head Access Area (3) Direct Gamma	RCB	802	Continuous	10^{-1}-10^{-4} mR/hr		Direct Gamma	See Section 7.3.1.2
Radwaste Monitor:							
-IALL Evaporator, Heating Element; Heating Water Out (Liquid)	RWA	775	Continuous	4×10^{-7} 4×10^{-2} Cs^{137}		Gross Concent.	
-LALL Evaporator, Heating Element; Heating Water Out (Liquid)	RWA	775	Continuous	4×10^{-7} 4×10^{-2} Cs^{137}		Gross Concent.	
-IALL Evaporator, Distill. Cooler; Cooling Water Out (Liquid)	RWA	775	Continuous	4×10^{-7} 4×10^{-2} Cs^{137}		Gross Concent.	
-LALL Evaporator, Distill Cooler; Cooling Water Out (Liquid)	RWA	775	Continuous	4×10^{-7} 4×10^{-2} Cs^{137}		Gross Concent.	
-LALL Effluent	RWA	795	Continuous	4×10^{-7} 4×10^{-2} Cs^{137}		Gross Concent.	
RAPS & CAPS Process Monitors:							
-Gas Entering RAPS Cold Box (Gaseous)	RCB	733	Continuous	2.7-2.7×10^{5} Kr^{85}		Gross Concent.	
-Coolant Leaving RAPS Cold Box (Gaseous) (2)	RSB	779	Continuous	2.7×10^{-6}-2.7×10^{-1} Kr^{85}		Gross Concent.	In-Line Monitoring
-Gas Leaving RAPS Cold Box (Gaseous)	RCB	733	Continuous	2.7×10^{-3}-$2.7\times10^{+2}$ Kr^{85}		Gross Concent.	
-Gas Leaving CAPS Surge Vessel (Gaseous Iodine)	RSB	779	Continuous	2.7×10^{-4}-$2.7\times10^{+1}$ Kr^{85} 10^{-5}-10^{0} I^{131}		Gross Concent.	
-CAPS Header Serving RCB Cells (Gaseous)	RCB		Continuous	2.7×10^{-6}-2.7×10^{-1} Kr^{85}		Gross Concent.	

TABLE 11.4-1 PROCESS & EFFLUENT MONITORING AND SAMPLING

Description	Bldg.	Elev.	Sample or Cont.	Range (μCi/cc) UOS	Expected Concent.	Quant. Meas.	Remarks
-Gas From Nitrogen Cell Atmosphere Sampling Unit (Gaseous)	RSB	755	Continuous	2.7×10^{-6}-2.7×10^{-1} Kr^{85}		Gross Concent.	
-Gas From Nitrogen Cell Atmosphere Sampling Unit (Gaseous)	RCB	752	Continuous	2.7×10^{-6}-2.7×10^{-1} Kr^{85}		Gross Concent.	
CAPS Process Gas Effluent to HVAC (Gaseous) (2) (Iodine)	RSB	779	Continuous	2.7×10^{-5}-2.7×10^{0} Kr^{85} 10^{-10}-10^{-5} I^{131}		Gross Concent.	
Effluent Gas From (2) Inerted Cells to HVAC (Gaseous)	RSB	800	Continuous	2.7×10^{-6}-2.7×10^{-1} Kr^{85}		Gross Concent.	
HVAC Duct Monitoring (CAM of RAPS/CAPS Cells:							
-RAPS Cold Box & Valve Gallery Cells (Gaseous)	RCB	733	Continuous	2.7×10^{-6}-2.7×10^{-1} Kr^{85}		Gross Concent.	In-line Monitoring & Cell Isolation
-RAPS Noble Gas Storage Vessel Cell (Gaseous)	RCB	733	Continuous	2.7×10^{-6}-2.7×10^{-1} Kr^{85}		Gross Concent.	In-line Monitoring & Cell Isolation
-RAPS Compressor and Aftercooler Cells (2) (Gaseous)	RCB	733	Continuous	2.7×10^{-6}-2.7×10^{-1} Kr^{85}		Gross Concent.	In-Line Monitoring & Cell Isolation
-RAPS Vessels (Gaseous)	RCB	733	Continuous	2.7×10^{-6}-27×10^{-1} Kr^{85}		Gross Concent.	In-Line Monitoring & Cell Isolation
-RAPS/CAPS Pipeway (Gaseous)	RCB	780	Continuous	2.7×10^{-6}-2.7×10^{-1} Kr^{85}		Gross Concent.	In-Line Monitoring & Cell Isolation
-CAPS Cold Box Cell (Gaseous)	RSB	792	Continuous	2.7×10^{-6}-2.7×10^{-1} Kr^{85}		Gross Concent.	In-Line Monitoring & Cell Isolation
-CAPS Vessel Cells & Gallery (Gaseous)	RSB	755	Continuous	2.7×10^{-6}-27×10^{-1} Kr^{85}		Gross Concent.	In-Line Monitoring & Cell Isolation

TABLE 11.4-1 PROCESS & EFFLUENT MONITORING AND SAMPLING

Description	Bldg.	Elev.	Sample or Cont.	Range (μCi/cc) UOS	Expected Concent.	Quant. Meas.	Remarks
-CAPS Compressor & (2) After Cooler Cells (Gaseous)			Continuous	2.7×10^{-6}-27×10^{-1} Kr^{85}		Gross Concent.	In-Line Monitoring & Cell Isolation
-RAD Water Holding Vessel & Pump Cell (Gaseous)			Continuous	2.7×10^{-6}-27×10^{-1} Kr^{85}		Gross Concent.	In-Line Monitoring & Cell Isolation
-Access Areas (4) (Gaseous)			Continuous	2.7×10^{-6}-27×10^{-1} Kr^{85}		Gross Concent.	In-Line Monitoring & Cell Isolation
-Cover Gas Monitoring Cells (Gaseous)			Continuous	2.7×10^{-6}-27×10^{-1} Kr^{85}		Gross Concent.	In-Line Monitoring & Cell Isolation
-Pipe Chase & Vapor Trap Cell (Gaseous)	RSB	772	Continuous	2.7×10^{-6}-27×10^{-1} Kr^{85}		Gross Concent.	In-Line Monitoring & Cell Isolation
-HVAC Common Header For Various Cells (Gaseous)	RCB	766	Continuous	2.7×10^{-6}-27×10^{-1} Kr^{85}		Gross Concent.	In-Line Monitoring & Cell Isolation
Main HVAC Duct From All RAPS/CAPS Cells (Gaseous) CAM (Iodine)	RSB	779	Continuous	2.7×10^{-6}-2.7×10^{-1} Kr^{85} 10^{-10}-10^{-5} I^{131}		Gross Concent.	
Sodium Leak Detection For Following Recirc. Gas Cooling Subsystems: (All Particulate)							
Reactor Cavity	RCB	733	Continuous	2.94×10^{-13}-2.94×10^{-5} Na^{24}		Gross Concent.	Alarm Only
PHTS Loop 1	RCB	766	Continuous	2.94×10^{-13}-2.94×10^{-5} Na^{24}		Gross Concent.	Alarm Only
PHTS Loop 2	RCB	766	Continuous	2.94×10^{-13}-2.94×10^{-5} Na^{24}		Gross Concent.	Alarm Only
PHTS Loop 3	RCB	766	Continuous	2.94×10^{-13}-2.94×10^{-5} Na^{24}		Gross Concent.	Alarm Only
Na Makeup Pump & Vessels	RCB	752	Continuous	2.94×10^{-13}-2.94×10^{-5} Na^{24}		Gross Concent.	Alarm Only
Na Makeup Pump & Pipeway	RCB	752	Continuous	2.94×10^{-13}-2.94×10^{-5} Na^{24}		Gross Concent.	Alarm Only

TABLE 11.4-1 PROCESS & EFFLUENT MONITORING AND SAMPLING

Description	Bldg.	Elev.	Sample or Cont.	Range (μCi/cc) UOS	Expected Concent.	Quant. Meas.	Remarks
Cold Trap, Nak Cells	RCB	794	Continuous	2.94×10^{-13}-2.94×10^{-5} Na^{24}		Gross Concent.	Alarm Only
Control Room Main (2) Air Intake (Gaseous) CAM (Iodine) (Particulate)	CB	863	Continuous	3×10^{-7}-3×10^{-2} Kr^{85} 4×10^{-12}-4×10^{-7} I^{131} 2×10^{-10}-2×10^{-5} Cs^{137}	See Section 12.2	Gross Concent.	Initiate C/R Isolation, see Sec. 7.6.4.5.6 Safety-Related (1E)
Control Room Remote (2) Air Intake (Gaseous) CAM (Iodine) (Particulate)	SGB	851	Continuous	3×10^{-7}-3×10^{-2} Kr^{85} 4×10^{-12}-4×10^{-7} I^{131} 2×10^{-10}-2×10^{-5} Cs^{137}	See Section 12.2	Gross Concent.	Initiate C/R Isolation, see Sec. 7.6.4.5.7 Safety-Related (1E)
Control Room Common Duck Downstream of Filter Units (Gaseous) CAM (Iodine) (Particulate)	CB	847	Continuous	3×10^{-7}-3×10^{-2} Kr^{85} 4×10^{-12}-4×10^{-7} I^{137} 5×10^{-10}-5×10^{-5} Cs^{137}	See Section 12.2	Gross Concent.	Monitor Only
IHTS Loop 1 (Direct Gamma)	SGB	765	Continuous	10^{-2}-10^{3} mR/hr		Gross Activity	
IHTS Loop 2 (Direct Gamma)	SGB	765	Continuous	10^{-2}-10^{3} mR/hr		Gross Activity	
IHTS Loop 3 (Direct Gamma)	SGB	765	Continuous	10^{-2}-10^{3} mR/hr		Gross Activity	
Large Component Cleaning Cell (LCCC)	RCB	756	Continuous	10^{-1}-10^{4} mR/hr		Gross Activity	
LCCC Cooling Water (Liquid)	RCB	733	Continuous	4×10^{-7}-4×10^{-2} Cs^{137}		Gross Concent.	
LCCC Process Gas Effluent (Gaseous)	RCB		Continuous	10^{-6}-10^{-1} Kr^{85}		Gross Concent.	
Fuel Handling Cell (FHC) Argon Gas (Gaseous) (Iodine) (Particulate)	RSB	779	Continuous	10^{-6}-10^{-1} Kr^{85} 10^{-10}-10^{-5} I^{131} 10^{-10}-10^{-5} Cs^{137}		Gross Concent.	
EVST Argon Cover Gas (Gaseous)	RSB	842	Continuous	10^{0}-10^{4} Kr^{85}		Gross Concent.	

TABLE 11.4-1 PROCESS & EFFLUENT MONITORING AND SAMPLING

Description	Bldg.	Elev.	Sample or Cont.	Range (μCi/cc) UOS	Expected Concent.	Quant. Meas.	Remarks
FHC Utility Monitor (Direct Gamma)	RSB	779	Continuous	10^{-1}-10^{7} mR/hr		Gross Activity	
Radwaste Building Exhaust (Gaseous) CAM (Iodine) (Particulate)	RWB	867	Continuous	$3x10^{-7}$-10^{3} Kr^{85} 10^{-10}-10^{2} I^{131} 10^{-10}-10^{2} Cs^{131}		Gross Concent.	Initiate Filtering of Effluent from RWB
RSB Operating Floor (2) HVAC Exhaust (Gaseous) CAM (Iodine) (Particulate)	RSB	816	Continuous	$3x10^{-7}$-$3x10^{-2}$ Kr^{85} $4x10^{-12}$-$4x10^{-7}$ I^{131} 10^{-6}-10^{-1} Cs^{137}		Gross concent.	Initiate RSB Confinement see Section 7.6.4.3.3 (4) Safety related (1E)
Fuel Handling Cell (2) HVAC Exhaust (Gaseous) (Iodine) (Particulate)	RSB	779	Continuous	$3x10^{-7}$-$3x10^{-2}$ Kr^{85} $4x10^{-12}$-$4x10^{-7}$ I^{131} 10^{-6}-10^{-1} Cs^{137}		Gross Concent.	- same -
Annulus Filter (2) Discharge (Gaseous) (Iodine) (Particulate)	RSB	840 861	Continuous	$4.4x10^{-6}$-$4x4x10^{-1}$ Kr^{85} $1.1x10^{-7}$-$1.1x10^{-2}$ I^{131} $1.2x10^{-10}$-$1.2x10^{-5}$ Cs^{137}		Gross Concent.	Select Filter train Section 7.6.4.2.2 (1) Safety Related (1E)
Annulus Filter Inlet/(2) Annulus Cooling Exhaust CAM (Gaseous) (Iodine) (Particular)	RSB	840 861	Continuous	$3x10^{-7}$-$1x10^{4}$ Kr^{85} $1x10^{-10}$-$1x10^{2}$ I^{131} $1x10^{-6}$-$1x10^{2}$ Cs^{137}		Gross Concent.	1) Start Filter see 7.6.4.2.2 (6) 2) Monitor Exhaust see 11.4.2.2.3 (Accident (Monitor)
RSB Clean Up Filter Discharge (Gaseous) (Iodine) (Particulate)	RSB	816 794	Continuous	$3x10^{-7}$-$3x10^{-2}$ Kr^{85} $1x10^{-10}$-$1x10^{-5}$ I^{131} $1x10^{-6}$-$1x10^{-1}$ Cs^{137}		Gross Concent.	Select Filter Train See Section 7.6.4.3.3(1) Safety Related (1E)
Radwaste Ventilation Exhaust Effluent (Gaseous) (Iodine) (Particulate)	RSB	867	Continuous	$1x10^{-6}$-$1x10^{3}$ Kr^{85} $1x10^{-10}$-$1x10^{2}$ I^{131} $1x10^{-10}$-$1x10^{2}$ Cs^{137}	See Section 11.3.6	Gross Concent.	Effluent, Accident Monitor

TABLE 11.4-1 PROCESS & EFFLUENT MONITORING AND SAMPLING

Description	Bldg.	Elev.	Sample or Cont.	Range (μCi/cc) UOS	Expected Concent.	Quant. Meas.	Remarks
RCB Ventilation Exhaust Effluent (Gaseous) (Iodine) (Particulate)	RSB	861	Continuous	1×10^{-6}-1×10^{-1} Kr^{85} 1×10^{-10}-1×10^{-5} I^{131} 1×10^{-10}-1×10^{-5} Cs^{137}	See Section 11.3.2.6	Gross Concent.	
RCB Annulus/TMBDB (2) Effluent (Gaseous) (Iodine) (Particulate) (Plutonium/Alpha)	RSB	840 861	Continuous	1×10^{-6}-1×10^{5} Kr^{85} 1×10^{-10}-1×10^{2} I^{131} 1×10^{-10}-1×10^{2} Cs^{137} 1×10^{-12}-1×10^{-7} Pu^{239}			Accident Monitor Safety Related (1E)
RSB Exhaust Effluent (Gaseous) (Iodine) (Particulate)	RSB	816	Continuous	1×10^{-6}-1×10 Kr^{85} 1×10^{-10}-1×10^{2} I^{131} 1×10^{-10}-1×10^{2} ^{137}			Accident Monitoring
SGB-IB Exhaust Effluent (Gaseous) (Iodine) (Particulate)	SGB	836	Continuous	1×10^{-6}-1×10^{3} Kr^{85} 1×10^{-10}-1×10^{2} I^{131} 1×10^{-10}-1×10^{2} Cs^{137}	See Section 11.3.2.6		Accident Monitoring
Hot Laboratory, Counting Room, and Decontamination Area Ventilation Exhaust Particulate Sampler	PSB		Sample**			Gross Concent.	
Plant Discharge Canal Liquid Sampler	YARD	-	Sample ***		See Section 11.2.5	Concent.	

** Particulate collection on filter, analysis by proportional counters and spectroscopy system.
*** Liquid Samples collected in container. Analysis by proportional and liquid scintillation counters and spectroscopy system.

11.5 SOLID WASTE SYSTEM

11.5.1 Design Objectives

The solid radioactive waste system is designed to handle, package and store concentrated activity liquids, compactible low activity solid waste and low activity non-compactible solids. Temporary storage will also be provided for 55 gallon drums of radioactive liquid metals and liquid metal contaminated solids. The basic approach is to solidify the liquid waste with cement, to load all radioactive waste as solids into containers that meet CFR regulations, and to transfer the containers to a licensed contractor for off site disposal. The design objective of the solid radwaste system is to release no radioactivity to the environment.

Table 11.5-1 presents a summary of the curie inventory, the volume and weight of radioactive solids that the solid waste system is designed to accommodate each year. The design basis includes the assumption that the plant operates with 1.0% fuel elements failed.

11.5.2 System Inputs

The Solid Radwaste System (SRS) is designed to process and package solid wastes that are to be shipped off-site for disposal. The packaging will be such that the surface dose rate will be in compliance with the Department of Transportation regulations.

Flow diagrams for the SRS are shown in schematic form by Figure 11.5-1. All shipment containers are transferred to licensed contractor for off site disposal.

The system is designed to handle, package and store three sources of wastes: concentrated liquids, compactible solids, and non-compactible solids. Temporary storage is also provided for 55 gallon drums of radioactive liquid metals and liquid metal contaminated solids. Estimates of the design quantities are shown in Table 11.5-1. The design values for the isotopic inventories for the principal sources of waste are shown in Table 11.5-2. Estimates of the design quantities are shown in Table 11.5-1, in terms of volume weight and activity. The design activities are based on operation with 1.0% failed fuel and 100 ppb Pu in primary sodium.

11.5.3 Equipment Description

The equipment in the solid radwaste system is shown schematically in Figure 11.5-1. The equipment includes a cement filling station, a cement storage bin, a filter handling station, a drumming station, a decanting station, a concentrated waste collection tank, a drum inspection station, a remote operated crane, and a compactor.

The solid radwaste system is designed to perform its function with radiation hazards to plant personnel as low as reasonably achievable through the use of proper layout and arrangement coupled with adequate shielding. Equipment is selected, arranged, and shielded to

permit operations, inspection and maintenance with minimal exposure to personnel. All operations will be monitored to assure that radiation concentrations in accessible areas are below the exposure limits set by 10CFR20. The structure housing the solid radwaste system is designed to Seismic Category III.

The design of the solid radwaste system is based on widespread experience in the nuclear industry spanning two decades. A critical review of solid radwaste practice at nuclear power plants is contained in Reference 1. In particular, the incorporation of concentrated liquid radwaste in cement is widely and routinely used in power reactor plants. The packaging of solid material for disposal by burial is also standard practice. Figure 11.5-2 provides a piping and instrumentation diagram of the solid Radioactive Waste System.

All solid radwaste system equipment and piping is designed as quality group "D" based on the classifications in Section 3.2.

The operating procedures for handling the five input streams into the solid radwaste system are as follows:

Concentrated Liquids

Concentrated liquids, which include evaporator bottom spent resins, sodium contaminated ethyl alcohol, and tritiated water from CAPS, are solidified. A fixed amount of liquid radwaste is metered into a 55 gallon drum which has been preloaded with cement. The drum is capped thoroughly mixed by tumbling, decontaminated by rinsing, monitored, stored temporarily, and then transferred to a licensed contractor for disposal. The solid radwaste system is presently estimated to process approximately one hundred and fifty-three 55 gallon drums of solidated evaporator bottoms and resins. In addition approximately 314 gallons of sodium contaminated ethyl alcohol cleaning fluid from the fuel handling cell and 300 gallons of tritiated water from CAPS is expected to be solidified via the same method. The annual amount of solidified sodium contaminated ethyl alcohol is expected to be contained in nineteen (19) 55 gallon drums with a total activity of 1.2 curies. The annual amount of solidified tritiated water is expected to be contained in nine (9) 55 gallon drums with a total curie content of 0.7 curies.

Compactible Solids

Compactible solids such as rags, paper, and rubber seals will be collected at various points throughout the plant and transferred to the solid radwaste system. These types of solids, after compaction are estimated to have activity less than 9.5×10^{-5} Ci/ft^3. Compactible solids will be placed in 55-gallon drums and compacted by a hydraulic compacting machine. It is estimated that a total of twenty-eight 55-gallon drums per year will be produced. the drums will be transferred to a licensed contractor for disposal after a suitable number is accumulated.

Non-Compactible Solids

Non-compactible solids include used support tools, contaminated filters, metal from cutting operations such as an IHX tube bundle, valves and vapor traps.

The low activity non-compactible solids will be placed in 55 gallon drums, capped, decontaminated, monitored and placed in temporary storage. It is estimated that there will be a total of ninety-six (96) 55 gallon drums shipped per year containing non-compactible solids except filters. Spent filter cartridges from the liquid radwaste system will be remotely placed in concrete-lined 55 drums (one per drum) by the filter-handling machine and placed in storage prior to shipment in the same manner as other non-compactible solids. It is estimated that sixteen (16) drums of this type work will be generated yearly.

Metallic Sodium in Containers

Radioactive sodium will be present in the fuel handling cell as a result of fuel handling operations. This metallic sodium will be transferred to the radwaste system from the fuel handling cell in 55-gallon drums. The number of drums of waste is estimated to be two per year, each containing about 20Ci. Since no burial site will accept sodium, the drums will either be placed in storage on site or processed to a disposable form in a to be determined manner.

Sodium-Bearing Solids

No current disposal site will accept sodium or sodium bearing water. For off site disposal of this type of waste, sodium is required to be removed. Where sodium removal is not practical, the waste will be stored in the RSB.

The sources of sodium bearing wastes are the primary and intermediate cold traps. In general, off site disposal of cold traps is not planned. If replacement becomes necessary, the cold traps will be drained of bulk sodium and stored in designated locations. Primary cold traps are designed for the life of the plant and are not expected to require removal. However, if unplanned replacement becomes necessary, a storage location for a single primary cold trap is provided at elevation 792 in the Reactor Service Building. Intermediate cold traps will require removal, and storage is provided at elevation 733' in the Reactor Service Building. The ex-vessel storage tank cold trap is designed for the life of the plant and will not require removal.

11.5.4 Expected Volumes

The expected volumes of solid waste to be shipped and the number of shipments per year are listed in Table 11.5-3.

The estimates of volumes, associated curie content, and principal nuclides are based on the inputs from the various systems expected to produce contaminated materials. These sources have been described in some detail in Table 11.5-1.

11.5.5 Packaging

The packaging containers for waste disposal will be DOT approved 55-gallon drums or commercially available shipping casks. The permissible levels of activity for shipment will be within levels set by Title 49, parts 120-189 (DOT).

11.5.6 Storage Facilities

Two storage vaults are available for temporary storage of radwaste. The shielded drum storage vaults each have a capacity of 214 55 gallon drums.

The expected on-site storage period for solid radwaste drums is six months. Estimated decrease in activity during this six month storage period is approximately 75%.

Locations of various components of the solid radwaste system are provided in Section 1.2 in the general arrangement drawings of the RSB.

11.5.7 Shipment

Solid radwaste will be shipped in vehicles provided by a licensed contractor for waste disposal.

REFERENCES

1. Kibbey, A. H., and Godbee, H. W., "Critical Review of Solid Radioactive Waste Practices at Nuclear Power Plants," ORNL 4924, March, 1974.

TABLE 11.5-1

DESIGN OBJECTIVE IN SOLID RADWASTE SYSTEM PER YEAR
IN TERMS OF ANNUAL QUANTITIES

	Volume (ft^3)	Weight (lbs.)	Estimated Activity (CI)	Comments
Compactible Solids*	210	1.2×10^4	0.02 CI	Rags, paper, and seals
Non-Compactible Solids				
Scrapped Components	705	5.7×10^4	82	Valves, vapor traps, small components cleaned of sodium
Resins	125	5.6×10^3	280	RWS - activated corrosion and fission products
Filters	118 = RWS	1.28×10^4	170	Activated corrosion and fission products
Solidified Liquid Radwaste	1000	1.4×10^5	2.8×10^3	Concentrated evaporator bottoms
Solidified Tritiated Water	67	1.0×10^4	0.7	RAPS and CAPS
Metallic Sodium	15	4.5×10^2	40	Sodium from Reactor Refueling Operation
Solidified Sodium Contaminated Ethyl Alcohol	140	2.1×10^4	1.2	Cleaning solution from FHC
Total	2380	2.6×10^5	3.4×10^3	

*Assume compaction has decreased in volume by factor of 10.

RWS - Radwaste System

TABLE 11.5-2

INVENTORY OF DESIGN ANNUAL ACTIVITY OF SHIPPED WASTE

Isotope	Half-Life	Solidified Liquid Waste (Ci)	Sodium Contaminated Solids (Ci)
H-3	12.3Y	3.31 (-1)	1.8 (-4)
Na-22	2.6Y	6.24 (-1)	2.9 (-1)
Na-24	15H	7.76 (-2)	6.6 (-2)
Cr-51	28D	6.51 (-1)	1.0 (0)
Mn-54	312D	1.61 (-1)	3.6 (-1)
Co-58	71D	9.19 (0)	4.4 (1)
Co-60	5.2Y	4.24 (0)	6.3 (1)
Fe-59	45D	6.83 (-2)	4.0 (-1)
Sr-89	51D	6.58 (-1)	4.0 (0)
Sr-90	28.8Y	4.73 (-1)	1.7 (0)
Y-90	64.1H	4.73 (-1)	1.7 (0)
Y-91	58D	1.93 (-1)	1.2 (0)
Nb-95	35D	1.53 (1)	2.2 (0)
Zr-95	64D	1.53 (1)	2.2 (0)
Mo-99	67D	4.35 (-1)	-1
Ru-103	40D	1.49 (1)	3.0 (0)
Ru-106	1Y	2.88 (1)	2.5 (0)
Rh-106	2.2H	2.88 (1)	2.5 (0)
Ag-111	7.5D	1.27 (-2)	-
Sb-125	2.7Y	8.63 (-2)	1.8 (2)
Te-127m	109D	1.35 (0)	-
Te-127	9.35H	1.14 (0)	-
Te-129m	34D	4.05 (0)	2.5 (1)
Te-129	70M	4.05 (0)	2.5 (1)
Te-132	78H	6.41 (-4)	8.8 (0)
I-131	8.1D	1.37 (0)	5.0 (1)
I-132	2.3H	7.11 (-1)	8.8 (0)
Cs-134	2.1D	7.21 (-1)	1.4 (2)
Cs-136	13D	2.02 (0)	2.3 (1)
Cs-137	30Y	1.55 (1)	8.5 (3)
Ba-140	12.8D	4.18 (0)	8.0 (-1)
La-140	40H	4.18 (0)	8.0 (-1)
Ce-141	32.5D	4.24 (-1)	2.7 (0)
Ce-143	32.5D	2.28 (-1)	-
Pr-143	13.7D	2.28 (-1)	1.4 (0)
Ce-144	285D	3.11 (-1)	1.9 (0)
Pr-144	17M	3.11 (-1)	1.9 (0)
Nd-147	11.1D	9.57 (-2)	-
Pm-147	2.7D	1.74 (-1)	1.5 (0)
Eu-155	1.8Y	1.80 (-2)	1.64 (-1)
Ta-182	115D	2.35 (-2)	8.7 (-1)
Pu-238	86Y	3.86 (-3)	4.4 (-1)
Pu-239	2.0(4)Y	1.03 (-3)	1.1 (-1)

TABLE 11.5-2 (Continued)

INVENTORY OF DESIGN ANNUAL ACTIVITY OF SHIPPED WASTE

Isotope	Half-Life	Solidified Liquid Waste (Ci)	Sodium Contaminated Solids (Ci)
Pu-240	6.7(3)Y	1.34 (-3)	1.4 (-1)
Pu-241	13Y	1.14 (-1)	1.6 (1)
Pu-242	3.8(5)Y	2.89 (-6)	2.9 (-4)
Np-238	2D	4.23 (-8)	-
Np-239	2.4D	2.05 (-4)	-
Am-241	433Y	4.01 (-4)	-
Am-242m	152Y	1.58 (-5)	-
Am-242	16H	1.58 (-5)	-
Am-243	7.4(3)Y	1.85 (-5)	-
Cm-242	163D	2.85 (-4)	-
Cm-243	30Y	3.90 (-6)	-
49 Cm-244	18Y	8.14 (-5)	-

49 [1] Less than 1 curie

TABLE 11.5-3

SOLID RADWASTE SHIPMENTS PER YEAR

Material	Shipments Per Year	Volume (ft^3)	Containers Per Year
Compactible Solids	0.3	210	28
Non-Compactible Solids			
Scrapped Components	1.5	705	96
Resins	1.2	125	17
Solidified Liquid Radwaste	3.5	1000	136
Solidified Tritiated Water	0.1	67	9
Solidified Sodium Contaminated Ethyl Alcohol	0.3	140	19
Filters	1.1	118	16

*55-gal Drums

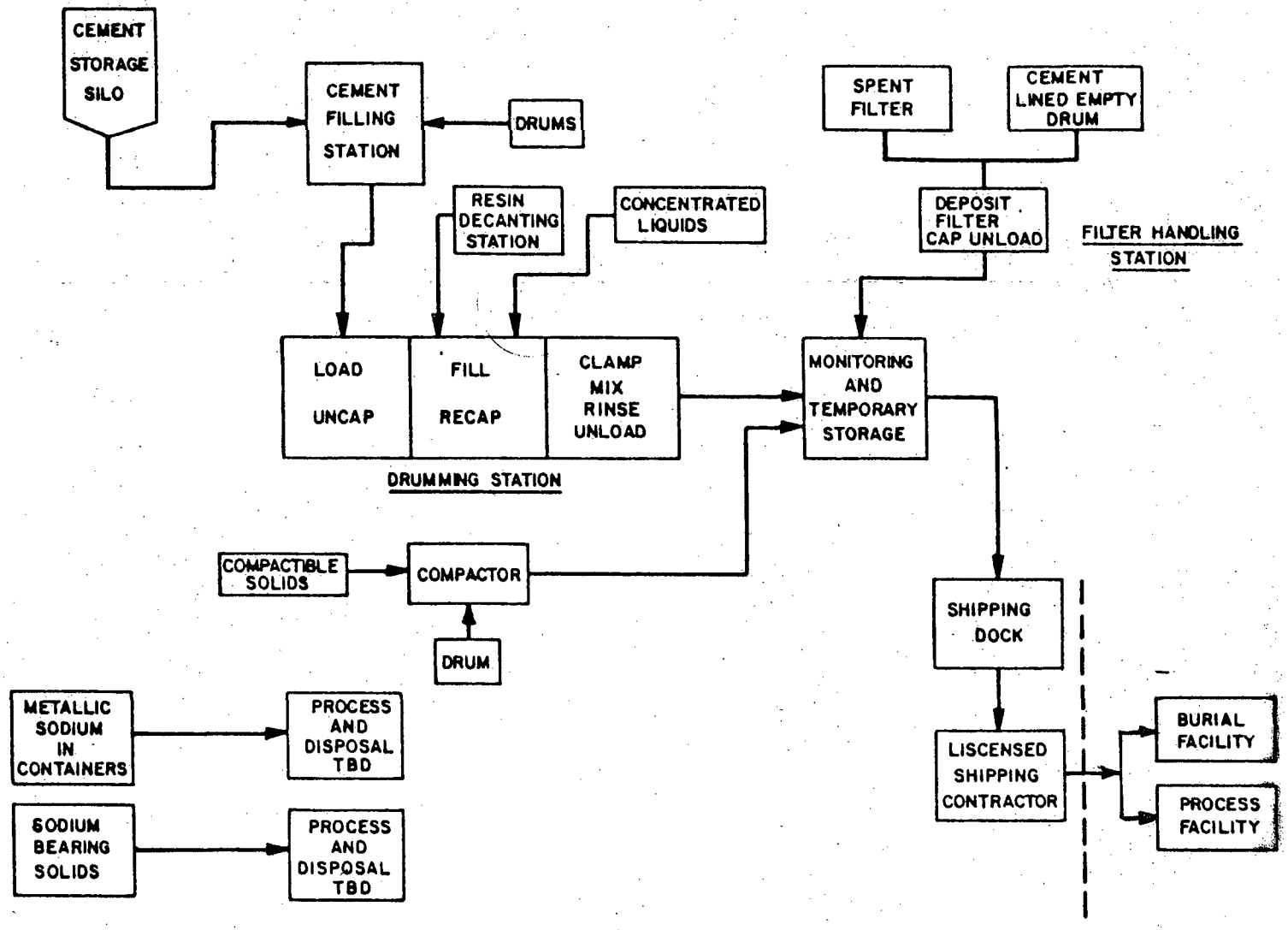

Figure 11.5-1. SOLID RADWASTE SYSTEM FLOW DIAGRAM

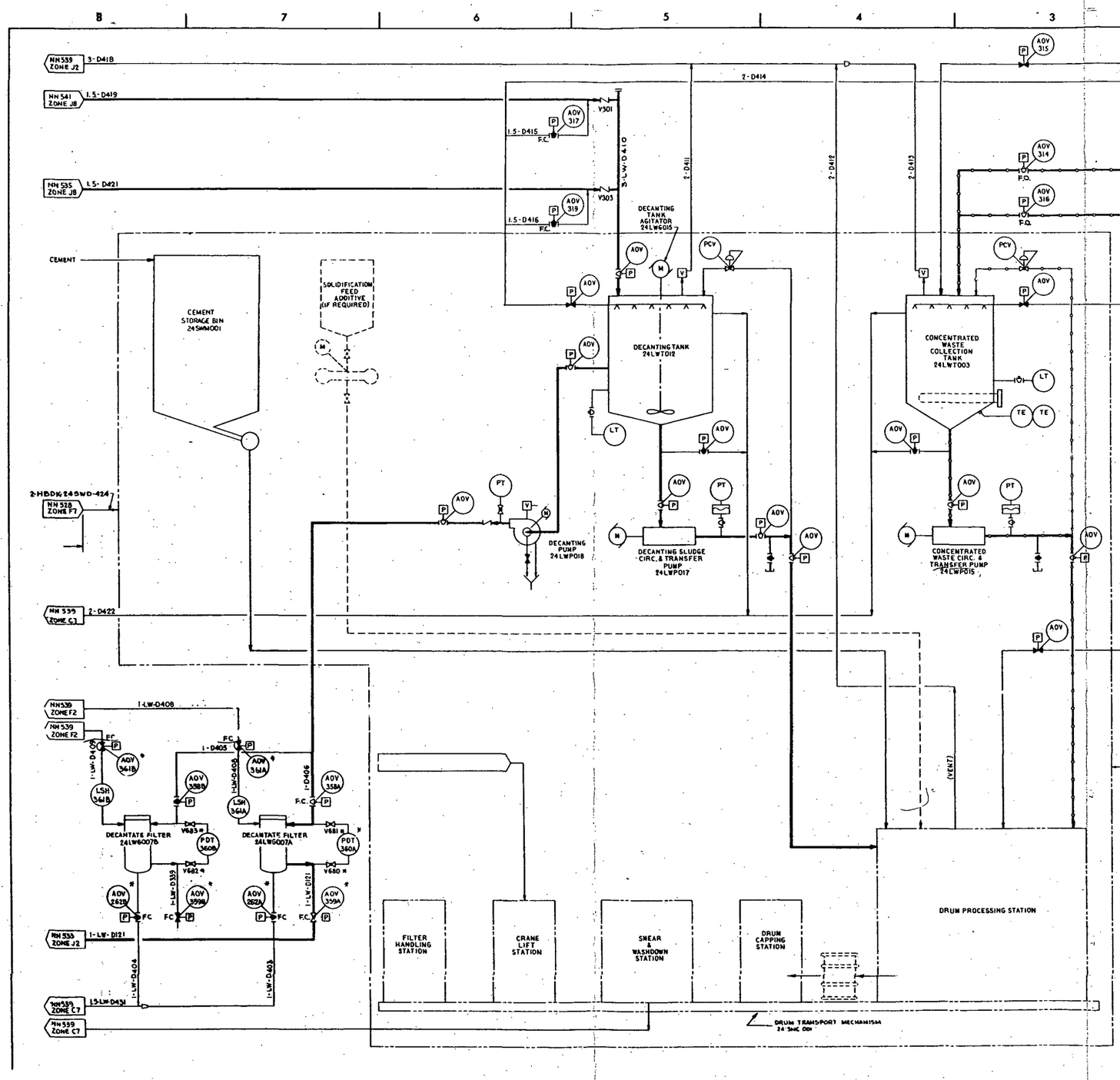

GENERAL NOTES

1. COMPONENTS, PIPING & VALVES SHOWN BY DOTTED LINES (- - - - -) AS REQUIRED
2. EQUIPMENT NUMBERS FOR MOTORS ARE IDENTICAL TO THE EQUIPMENT NUMBER FOR THE DRIVEN EQUIPMENT EXCEPT THAT THE LETTER "M" IS SUBSTITUTED FOR THE EQPT TYPE
3. ALL EQPT, PIPING, VALVING, INSTR. & AUX. SHOWN WITHIN "RADIOACTIVE SOLIDIFICATION SYSTEM PACKAGE" LIMITS TO BE VENDOR FURNISHED. MISSING VALVE & INSTRUMENT NOS. WILL BE PROVIDED AFTER CONTRACT AWARD.
4. LINE NUMBERS IN THE SOLID WASTE SYSTEM ARE ABBREVIATED AS FOLLOWS: 2-HCDJ-24SWD-24 IS WRITTEN 2-D24. ALL OTHER LINE DESIGNATIONS ARE AS NOTED ON EACH INDIVIDUAL LINE.
5. LINE NUMBERS IN THE LIQUID WASTE SYSTEM ARE ABBREVIATED AS FOLLOWS: 1-HCDJ-24LWD IS WRITTEN 1-LW-D24. ALL OTHER LINE DESIGNATIONS ARE AS NOTED ON EACH INDIVIDUAL LINE.
6. ALL INSTRUMENT AND CONTROL VALVE NUMBERS ON THIS DWG SHALL BE PREFIXED BY 24SW UNLESS NOTED OTHERWISE.
7. ALL INSTRUMENT AND CONTROL VALVES HAVING AN ASTERISK (*) SHALL BE PREFIXED BY 24LW.
8. UNLESS OTHERWISE INDICATED BY SYMBOLOGY ALL DIAPHRAGM VALVES ARE SPRING OPPOSED WITH POSITIONER AS APPLICABLE.
9. PIPE LINE REDUCERS & INCREASERS SHOWN ARE PRELIMINARY. AFTER PIPE ROUTING HAS BEEN COMPLETED THE ACTUAL PIPE CONNECTIONS WILL BE DETERMINED & THE LOCATIONS OF REDUCERS & INCREASERS SHOWN ACCORDINGLY
10. SYMBOLS & ABBREVIATIONS AS PER WARD DOC. D-0036
11. SYSTEM CLEANLINESS CLASSIFICATION: ANSI CLASS B FOR INSTRUMENTATION, ANSI CLASS C FOR ALL OTHER COMPONENTS & PIPING

REFERENCE DRAWINGS

INSTRUMENT LOOP DIAGRAMS NE 4783 SOLID RADIOACTIVE WASTE

FOR ADDITIONAL REFERENCES SEE DRAWING NN533

Figure 11.5-2

Solid Radioactive Waste

NN530-5

11.6 OFFSITE RADIOLOGICAL MONITORING PROGRAM

The preoperational environmental monitoring program has the objective of establishing a baseline of data on the distribution of background radioactivity in the environment near the plant site. With this background information, it will then be possible to determine any statistically significant changes in the radioactivity levels. The preoperational environmental radiological monitoring program will be initiated approximately two years prior to plant operation. The program outlined herein is based on current regulatory guidelines and monitoring philosophy. At such time that any monitoring program is implemented, it may be revised to reflect changes in regulatory requirements and monitoring philosophy. 57

Evaluations after plant startup will be made on the basis of the baselines established in the preoperational program, considering geography and the time of the year where these factors are applicable, and by comparisons to control stations where the concentrations of station effluents are expected to be negligible. In those cases where statistically significant increase in the radioactivity level is seen in a particular sampling vector but not in the control station, meteorology and specific nuclide analysis will be used to identify the source of the increase.

The planned sampling frequencies will ensure that significant changes in the environmental radioactivity can be detected. The vectors which would first indicate increases in radioactivity are sampled most frequently. Those which are less effected by transient changes but show long-term accumulations are sampled less frequently. However, specific sampling dates are not crucial and adverse weather conditions or equipment failure may on occasion prevent collection of specific samples.

The capability of the environmental monitoring program to detect design-level releases from plant effluents is uncertain because of the small quantities which are expected to be released. The program will however provide the capability of detecting any significant buildup of radioactive material in the environment above and beyond that which is already present. Those vectors which are most sensitive to reconcentration of specific isotopes are sampled. If any increase in radioactivity levels is detected in these vectors, the program will be evaluated and broadened if deemed necessary.

From the data obtained from the radioanalytical and radiochemical analyses of the vectors sampled, dose estimates can be made for an individual or the population living near the plant site.

11.6.1 Expected Background

For a number of years measurements of background radiation have been made at various locations throughout the Tennessee Valley region. Environmental monitoring programs have been conducted in the vicinity of Oak Ridge, Watts Bar, and Chattanooga, Tennessee, and Decatur, Alabama. Over periods of not less than two years, the measurements made in these areas have indicated only very slight variations from location to location. The measurements obtained utilizing film badges or thermoluminescent dosimeters have revealed the following background radiation levels: Oak Ridge 78 mR/year, Chattanooga 71 mR/year, Watts Bar 68 mR/year, and Decatur 71 mR/year. It is estimated that the expected 57

57 background levels in the vicinity of the Clinch River Breeder Reactor Plant (CRBRP) will be between 60 and 90 mR/year. Measurements for the period 1977-1978 indicate the following yearly variations: Oak Ridge 73-83 mR, Chattanooga 68-74 mR, Watts Bar 68-69 mR, and Decatur 70-73 mR.

Measurements will be made in the immediate vicinity of the CRBRP site and will provide baseline data necessary for comparison of background radiation levels prior to and after startup of the plant.

11.6.2 Critical Pathways to Man

Although the amounts of radioactivity added to the environment from plant operations are small, critical exposure pathways to man have been identified in order to estimate the maximum dose to the individual and to establish the sampling requirements for the environmental radioactivity monitoring program. The six principal pathways which can result in radiation exposure to man are as follows:

a. External exposures and inhalation of gaseous releases.

b. Drinking water from the Clinch River and from wells in the immediate vicinity of the plant.

c. Swimming, boating, and fishing in the Clinch River.

d. Eating fish from the Clinch River.

e. Consuming animal flesh and other animal products which may be affected by plant operations.

f. Eating foods grown in areas adjacent to the plant site affected by plant releases.

The environmental monitoring program as outlined, provides sampling necessary to evaluate the dose received through the critical pathways in items a. through f. above. The following items indicate the samples collected in order to make the critical pathway-dose correlations:

a. Data from readings of the thermoluminescent dosimeters will be utilized to
7 estimate external exposures and data from offsite air monitors will be used to estimate contributing internal exposures.

b. Analysis of water samples collected will be used to estimate the dose that might be received from drinking water from the Clinch River or from wells in the vicinity of the plant.

c. Analysis of water samples will also be used to estimate the dose an individual might receive while swimming, boating, or fishing on the lake in the vicinity of the plant.

7 d. Analysis of samples of river water, sediment, and fish will be correlated to estimate the dose that might be received by an individual who eats fish from the Clinch River.

Amend. 57
Nov. 1980

e&f. Analysis of samples of air, particulate matter, soil, vegetation, food crops, and milk will be used to estimate the dose to the surrounding population through the consumption of food or dairy products.

57

The environmental monitoring program to be conducted throughout operation of the plant provides the necessary means of evaluating the dose to man through critical exposure pathways.

Environmental concentrations of radioactivity due to plant releases to unrestricted areas may be so low as to be unmeasurable with present techniques. Therefore, methods to calculate the potential exposure to man have been derived for both gaseous and liquid releases.

11.6.2.1 Doses from Gaseous Effluents

The following doses to humans living in the vicinity of the CRBRP will be calculated for the releases of radioactive gases:

a. External beta- and gamma-air doses from airborne radioactivity

57 b. Total body and skin doses from direct radiation due to ground contamination

c. Internal doses from inhalation

d. Internal doses from ingestion

The basic assumptions and calculational methods that will be used in computing these doses are similar to that described in the appendix to Section 11.3.

57 Review of the data resulting from the offiste monitoring program and reevaluations of the adequacy of the dose models will verify that the actual doses received by individuals and the population as a whole remain within the applicable Federal Regulations and as low as reasonably achievable.

11.6.2.2 Internal Doses from Liquid Effluents

The following doses will be calculated for exposures to radionuclides routinely released in liquid effluents:

a. Internal doses from the ingestion of water

b. Internal doses from the consumption of fish

57 c. External and internal doses from water sports

d. External doses from shoreline activities

The basic assumptions and calculational methods that will be used in computing these doses are similar to that described in the appendix to Section 11.2.

The dose models that are employed will be reevaluated in light of the data resulting from the offsite monitoring program to ensure that all signi-

57 ficant pathways are included in the calculations and to verify that the actual doses received by individuals and the population as a whole remain within the
38 applicable Federal Regulations and as low as reasonably achievable.

11.6.3 Sampling Media, Locations, and Frequencies

The sampling media, the locations from which the samples are collected, and the frequency with which the samples are collected are presented in Table 11.6-1. Tentative sampling locations are shown in Figures 11.6-1 and
57 11.6-2. The final selection of sampling locations will be made approximately one year prior to implementation of the program. The media selected were chosen on two bases: First, those vectors which would readily indicate significant increases in radioactivity levels, and secondly, those vectors which would indicate long-term buildup of radioactivity. Consideration was also given to the pathways which would result in exposure to man, such as milk and food crops. Locations for sampling stations were chosen after considering meteorological factors and population density around the site. Frequencies for sampling the various vectors were established so that seasonal variations in radioactivity levels might be determined. In addition, samples are collected during the season in which the major growth occurs to ascertain radioactivity uptake by the vectors during their most susceptible period of growth.

11.6.4 Analytical Sensitivity

Samples will be collected routinely following established procedures so that uniformity in sampling methods will always be assured. The samples
7 will be transported to a laboratory facility for preparation and processing. All the radioanalytical and radiochemical analyses will be conducted in that laboratory. The following types of equipment will be utilized in performing the analyses: Pulse height analyzers with solid and well NaI detectors and Ge(Li) detectors; low background beta counters; liquid scintillation counters; GM detec-
7 tors; and internal proportional counters. Data will be coded and stored in computerized data base.

The detection capabilities for environmental sample analyses will
9 be presented in the FSAR. The nominal lower limit of detection (LLD) for the various analytical techniques will be based on the method discussed in HASL-300
7 (ref. 1). The nominal LLD values are expected to approximate the values recommended in Regulatory Guide 4.2: However, the LLDs will vary depending on the
38 activities of the various components in the samples.

11.6.5 Data Analysis and Presentation

A quality control program has been established with the Tennessee Department of Public Health Radiological Laboratory. Samples of air particu-
7 lates, water, and milk will be collected and forwarded to this laboratory for analysis. The results will be exchanged for comparison to aid the laboratories in evaluating their analytical systems and minimizing errors in data production.

Data collection around the operating plant will be compared to data from control stations and from the preoperational program to identify the earliest possible indications of the accumulation or buildup of radionuclides in the environment. During the life of the plant, this accumulation should exist in
38 no more than trace amounts, with only minor impact on the environment.

Reports describing the results of the environmental radiological monitoring activities will be submitted routinely as required by the Technical Specifications. The reports will follow the format used in reporting environmental radiological data from TVA's other nuclear power facilities. 38

11.6.6 Program Statistical Sensitivity

As previously noted, because of the expected small quantities of radioactive material which may be released to the environment from the CRBRP, it is uncertain as to what extent the results from the environmental monitoring program will be used to estimate the probable radiation exposure to man. Only if the radioactive waste releases from the plant cause statistically measurable incresess of radiation in the environment can dose correlations be made.

Results from the analysis of effluent samples, which contain higher concentrations of radionuclides than environmental samples, will be used in the TVA models similar to those given in the appendices to Sections 11.2 and 11.3 to estimate the possible exposure to man. Because of the conservative assumptions applied in these models, the estimated dose to the population should be higher than that actually received. However, TVA, even using the conservative assumptions, will control the releases of radioactive materials to the environment such that the releases remain within the applicable Federal Regulations and as low as reasonably achievable. 57

The statistical sensitivity of the monitoring during accident conditions will not be different from those during normal plant operation and is expected to detect concentrations well below 10CFR Part 20 limits. 57

Amend. 57
Nov. 1980

REFERENCES

57 1. HASL-300, HASL Procedure Manual, J. H. Harley, Ed., Rev. August 1974.

Amend. 57
Nov. 1980

TABLE 11.6-1

ENVIRONMENTAL RADIOLOGICAL SURVEILLANCE PROGRAM

	Criteria and Sampling Locations	Collection Frequency	Analysis/Counting
I. Atmospheric			
A. Air			
1. Particulate	Filter paper at 12-15 locations	Weekly[b]	Gross beta, gross alpha, (gamma scan monthly, Pu and U quarterly), (^{89}Sr, ^{90}Sr)[c]
2. Radioiodine	Charcoal filter at 12-15 locations	Weekly[b]	^{131}I
3. Moisture	Sampling at 3-8 locations	Weekly[b]	^{3}H
B. Fallout	Gummed acetate at 12-15 locations	Monthly	Gross beta, gross alpha
C. Rainwater	Rainwater collection trays at 12-15 locations	Monthly	Gross beta, gamma scan ^{89}Sr, ^{90}Sr, ^{3}H
II. Reservoir			
A. Water			
1. Municipal (Public supplies)	All public water supply intakes within 10 miles upstream and downstream of the plant	Monthly[a]	Gross beta, gross alpha, gamma scan, ^{3}H monthly, Pu quarterly
2. River	Continuous samples from 4-8 locations	Analyzed Monthly	Gross beta, gross alpha, gamma scan ^{3}H monthly, ^{89}Sr, ^{90}Sr, Pu, U quarterly

a. All public water supplies within 10 miles downstream of the plant will be collected automatically and analyzed monthly.
b. Continuous sampling.
c. Radiostrontium composite analyses if ^{137}Cs is found in the gamma scan.

TABLE 11.6-1 (Continued)

	Criteria and Sampling Locations	Collection Frequency	Analysis/Counting
B. Aquatic Biota			
1. Fish	Two locations	Semiannually	Gross beta, gross alpha, gamma scan ^{89}Sr, ^{90}Sr, Pu
2. Shellfish (if available)	Four to six locations	Semiannually	Gross beta, gross alpha, gamma scan (^{89}Sr, ^{90}Sr, Pu shells only)
C. Sediment	Four to six locations	Semiannually	Gross beta, gross alpha, gamma scan, ^{89}Sr, ^{90}Sr, Pu
III. Terrestrial			
A. Soil	Atmospheric monitoring locations	Annually	Gross beta, gross alpha, gamma scan, Pu, U
B. Vegetation			
1. Pasturage grass	Selected dairy farms within 10-mile radius of plant	Quarterly	Gross beta, gross alpha, gamma scan, ^{89}Sr, ^{90}Sr, Pu
2. Grass	Collected at atmospheric monitoring stations	Quarterly	Same as pasturage grass
3. Food crops	Within 10-mile radius of plant	Annually	Gross beta, gross alpha gamma scan, ^{89}Sr, ^{90}Sr, Pu
C. Milk	Selected dairy farms within 10-mile radius of plant	Monthly[d]	Gamma scan, ^{89}Sr, ^{90}Sr, ^{131}I
D. Well water	Selected farms within 5 miles of plant and 1-5 wells on site	Monthly	Gross beta, gross alpha, gamma scan monthly, Pu quarterly
E. Direct radiation	TLDs on site and at atmospheric monitors	Quarterly	Dose determination

d. After the plant begins operation milk samples will be taken at least biweekly for ^{131}I analysis when cows are on pasture.

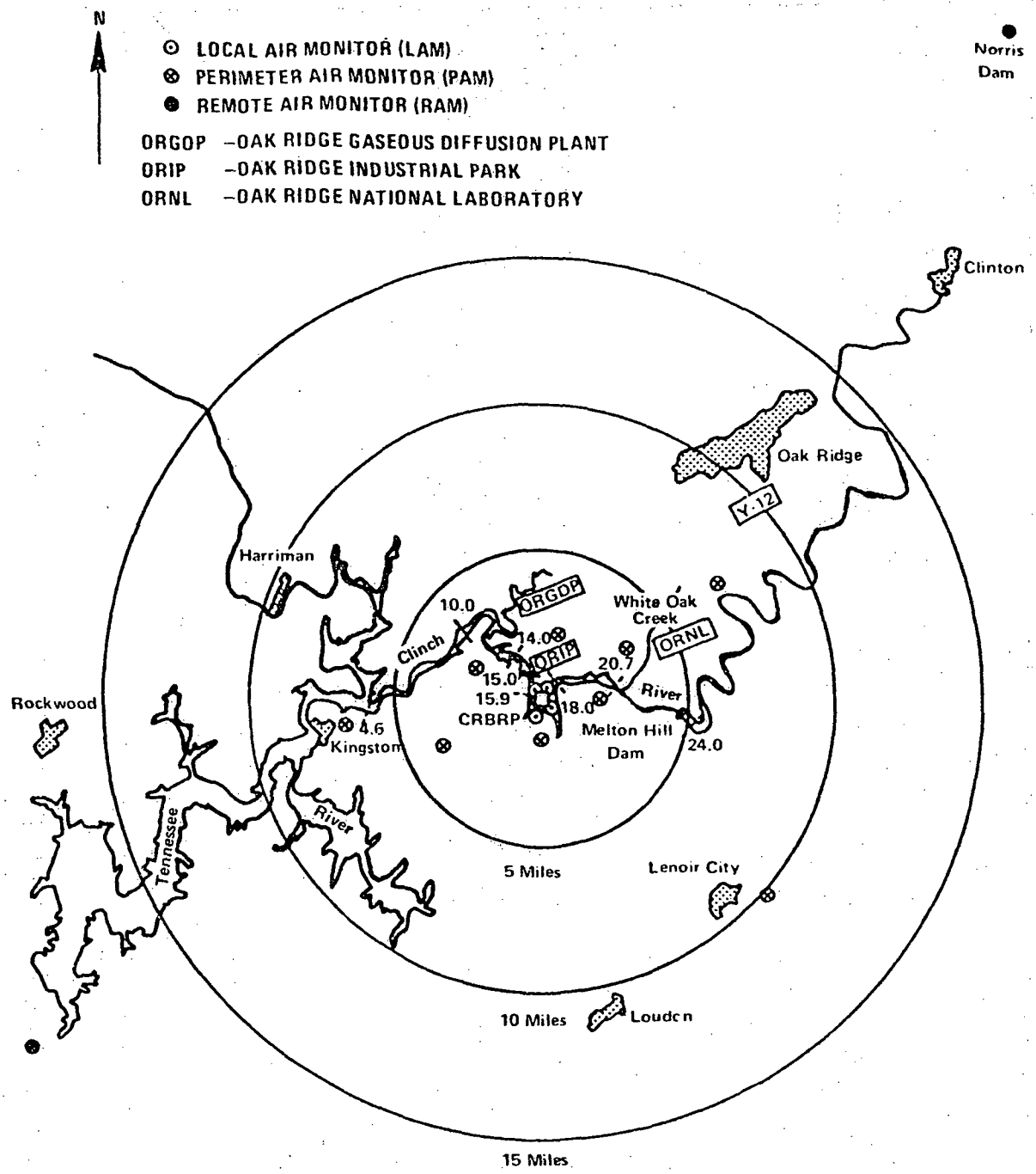

NOTE: THE FOLLOWING SAMPLES ARE COLLECTED AT EACH MONITORING SITE:

AIR PARTICULATE	RAINWATER
RADIOIODINE	SOIL
HEAVY PARTICLE	VEGETATION
FALLOUT	

Figure 11.6-1. Atmospheric and Terrestrial Monitoring Network – Clinch River Breeder Reactor

6713-1

Amend. 57
Nov. 1980

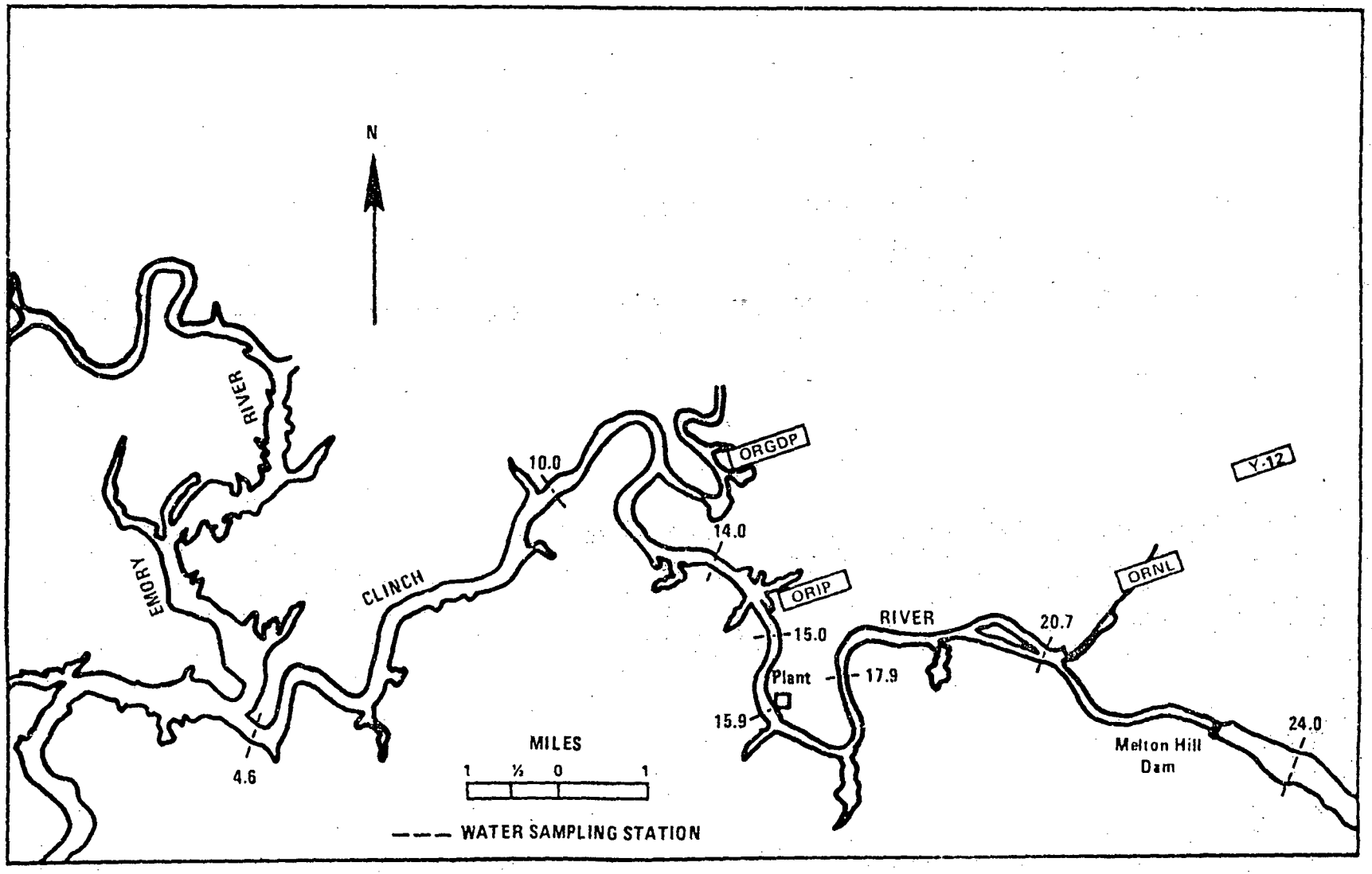

Figure 11.6-2. Reservoir Monitoring Network Clinch River Breeder Reactor

CLINCH RIVER

BREEDER REACTOR PROJECT

PRELIMINARY SAFETY ANALYSIS REPORT

CHAPTER 12

RADIATION PROTECTION

PROJECT MANAGEMENT CORPORATION

CHAPTER 12.0 - RADIATION PROTECTION

TABLE OF CONTENTS

		Page
	12.1 SHIELDING	
	12.1.1 Design Objectives	12.1-1
	12.1.1.1 Functional Objectives	12.1-1
	12.1.1.2 Biological Objectives	12.1-2
	12.1.2 Design Description	12.1-3
	12.1.2.1 General Shielding Design Criteria	12.1-3
	12.1.2.2 Shield Design - Primary Heat Transport and Auxiliary Systems	12.1-4
	12.1.2.3 Shield Design - Reactor and Enclosure System	12.1-8
	12.1.2.4 Specific Shield Design Parameters by Building	12.1-9
	12.1.3 Source Terms	12.1-13
	12.1.3.1 Sodium Primary Coolant Sources	12.1-14
	12.1.3.2 Radioactive Argon Cover Gas Sources	12.1-17
	12.1.4 Area Radiation Monitoring	12.1-23
	12.1.4.1 Design Criteria	12.1-23
34	12.1.4.2 Monitoring System Description	12.1-23a
	12.1.4.3 Maintenance and Calibration	12.1-24
	12.1.5 Estimates of Exposure	12.1-24
34	Appendix To Section 12.1	12.1A-1
	12.2 VENTILATION	
	12.2.1 Design Objectives	12.2-1
	12.2.2 Design Description	12.2-1

TABLE OF CONTENTS Continued

	Page	
12.2.3 Source Terms	12.2-3	1
12.2.4 Airborne Radioactivity Monitoring	12.2-3	
12.2.4.1 Design Criteria	12.2-3	
12.2.4.2 Monitoring System Description	12.2-4	
12.2.4.2.1 Continuous Air Monitors	12.2-4	
12.2.4.2.2 Portable Air Samplers	12.2-4c	
34		1
12.2.4.3 Maintenance and Calibration	12.2-5	
12.2.5 Inhalation Doses	12.2-5	
12.3 HEALTH PHYSICS PROGRAM		
12.3.1 Program Objectives	12.3-1	
12.3.2 Facilities and Equipment	12.3-3	
12.3.3 Personnel Dosimetry	12.3-6	
34 12.3.4 Estimated Occupancy Times	12.3-7	
APP-12A-INFORMATION RELATED TO A.L.A.R.A. FOR OCCUPATIONAL RADIATION EXPOSURES		14
12A.1 CRBRP ALARA Commitment	12A-1	
12A.2 10CFR20 Requirements	12A-1	
12A.2.1 ALARA	12A-1	
12A.2.2 Exposure Limits for Restricted Areas	12A-1	
12A.2.3 Exposure Limits for Unrestricted Areas	12A-1	
12A.3 CRBRP ALARA Program	12A-2	
12A.3.1 CRBRP ALARA Program for the Design through Preoperational Activities	12A-2	
50 12A.3.1.1 Plant Radiation Exposure Allocations	12A-2	

TABLE OF CONTENTS Continued

	12A.3.1.2	Design of Components and Systems	12A-2
	12A.3.1.3	Project ALARA Committee Reviews	12A-4
	12A.3.1.4	Health Physicists ALARA Reviews	12A-5
50	12A.3.2	CRBRP Operations Stage ALARA Program	12A-5

LIST OF TABLES

Table No.		Page
12.1-1	Plant Radiation Zone Classification	12.1-28
12.1-2	Shield Parameters for the Head Access Area	12.1-29
12.1-3	Shield Parameters for the Containment Building above Operating Floor	12.1-30
12.1-4	Shield Parameters for Accessible Areas of the Containment Building Below Operating Floor	12.1-31
12.1-5	Shield Parameters for the Reactor Service Building	12.1-32
12.1-6	Activation & Fission Products in the Primary Sodium	12.1-33
12.1-7	Deposition of Activation, Fission, Fuel & Corrosion Products in Sodium, on Wetted Surfaces & on Cold Traps	12.1-36
12.1-8	Inventory of Radioactive Primary Sodium in the PPTI and PSSP	12.1-37
12.1-9	Significant Corrosion, Fission Product and Released Fuel Activities on Wetted Surfaces at Reactor Shutdown	12.1-38
12.1-10	Radioisotope Inventory in Cold Traps After 15 Years Operation	12.1-40
12.1-11	Radioactive Argon Cover Gas Activation and Fission Products Release Rates and Resulting Isotopic Release Rate	12.1-42
12.1-12	Radioisotope Inventory in RAPS Vacuum Vessel During Reactor Operation	12.1-43
50 12.1-12a	Radioisotope Inventory in CAPS Vacuum Vessel During Reactor Operation	12.1-43a

LIST OF TABLES Continued

	Table No.		Page
	12.1-13	Radioisotope Inventory in RAPS & CAPS Compressors During Reactor Operation	12.1-44
	12.1-14	Radioisotope Inventory in RAPS Surge Tank During Reactor Operation	12.1-45
50	12.1-14a	Radioisotope Inventory in CAPS Surge Tank During Reactor Operation	12.1-45a
	12.1-15	Radioisotope Inventory in RAPS Cold Box During Reactor Operation	12.1-46
50	12.1.15a	Radioisotope Inventory in CAPS Cold Box During Reactor Operation	12.1-46a
	12.1-16	Radioisotope Inventory in RAPS Recycle Argon Vessel During Reactor Operation	12.1-47
	12.1-17	Radioisotope Inventory in RAPS Noble Gas Storage Vessel	12.1-48
	12.1-18	Tritium Removal Unit Radioisotope Concentrations	12.1-49
50	12.1-19	Deleted	12.1-50
	12.1-20	Gas Tag Sampler and Cover Gas Monitor Radioisotope Inventory During Reactor Operation	12.1-51
	12.1-21	EVST Gamma Source Term	12.1-52
	12.1-22	EVST Inherent Neutron Source Term	12.1-53
	12.1-23	EVST Sodium Specific Activity After 30 Years of Operation	12.1-54
	12.1-24	Radioisotope Inventory in EVST Cold Trap After 30 Years of Operation	12.1-55
50	12.1-25	Radioisotope Inventory in the EPRI and ESSP	12.1-56
	12.1-26	Inherent Neutron Source Term for New Fuel Assemblies	12.1-57
	12.1-27	Fuel Handling Cell Gamma Source Term as a Function of Energy	12.1-58
50	12.1-28	Inherent Neutron Source Term for Expended Fuel Assemblies	12.1-59

LIST OF TABLES Continued

Table No.		Page
50 12.1-29	Fuel Handling Cell Argon Circulation System Source Terms	12.1-60
12.1-30	Control Room Shield Design Source Term	12.1-61
12.1-31	Isotopic Inventory Released to Environment Release Includes Bypass Leakage and Annulus Leakage	12.1-62
12.1-32	Isotopic Curie Content-Equilibrium Core-EOC	12.1-63
12.1-33	CRDL Activation Source Term	12.1-64
12.1-34	Primary Pump Intermediate Level Waste System Radioisotope Inventory	12.1-65
12.1-35	Low Activity Level Liquid Waste Collection Tanks Radioisotope Inventory	12.1-66
12.1-36	Low and Intermediate Level Liquid Waste Collection Filters Radioisotope Inventory	12.1-67
12.1-37	Intermediate and Low Activity Level Evaporator Filters Radioisotope Inventory	12.1-68
12.1-38	Intermediate and Low Level Liquid Wash Evaporators Radioisotope Inventory	12.1-69
12.1-39	Intermediate and Low Level Demineralizers Radioisotope Inventory	12.1-70
12.1-40	Intermediate and Low Level Distillate Demineralizer Resin Traps Radioisotope Inventory	12.1-71
12.1-41	Intermediate Level Liquid Waste Precoat	12.1-72
12.1-42	Intermediate Activity Waste Filter Sludge Receiver Radioisotope Inventory	12.1-73
12.1-43	Solid Radioactive Waste Concentrated Waste Tank Radioisotope Inventory	12.1-74
12.1-44	Solid Radioactive Waste Decanting Tank Radio-isotopic Inventory	12.1-75
12.1-45	Solid Radioactive Waste Decant Filters Radio-isotope Inventory	12.1-76
50 12.1-46	Solid Radioactive Waste Radwaste Drum Radioisotope Inventory	12.1-77

Amend. 50
June 1979

LIST OF TABLES Continued

Table No.		Page
12.1-47	Solid Radioactive Waste Radwaste (Spent Resins-Filter Sludge) Radioisotope Inventory	12.1-78
12.1-48	Area Monitor Descriptions	12.1-79
12.1-49	Dose Rates Selected Plant Location Due to CRBRP Direct Radiation	12.1-80b
50 12.1-A1	Experimental Program Related to CRBRP Shielding	12.1A-6
12.2-1	Leakage Rates into Normally Accessible Areas	12.2-7
12.2-2	Radionuclide Concentrations in Head Access Area - Design Values	12.2-8
12.2-3	Location of Continuous Air Monitors	12.2-9
12.2-4	Expected Annual Exposure in Normally Accessible Cells	12.2-11
12.3-1	Typical Portable Health Physics Equipment	12.3-8
12.3-2	Typical Health Physics Laboratory Equipment	12.3-10
12.3-3	Estimated Man Hours of Access to Radiation Areas During Normal Operation and Operational Occurrences	12.3-11
12.3-4	Estimated Man Hours of Access to Accessible Radiation Zones	12.3-12 25
12.3-5	Personnel Protection Monitors Area Monitors	12.3-13
50 12.3-6	Personnel Protection Monitoring Continuous Air Monitors	12.3-15

LIST OF FIGURES

FIGURE NO.		PAGE
12.1-1	Plant Radiation Protection	12.1-81
12.1-2	Plant Radiation Protection	12.1-82
12.1-3	Plant Radiation Protection	12.1-83
12.1-4	Plant Radiation Protection	12.1-84
12.1-5	Plant Radiation Protection	12.1-85
12.1-6	Plant Radiation Protection	12.1-86
12.1-7	Plant Radiation Protection	12.1-87
12.1-8	Plant Radiation Protection	12.1-88
12.1-9	Plant Radiation Protection	12.1-89
12.1-10	Plant Radiation Protection	12.1-90
12.1-11	Plant Radiation Protection	12.1-91
12.1-12	Plant Radiation Protection	12.1-92
12.1-13	Plant Radiation Protection	12.1-93
12.1-14	Plant Radiation Protection	12.1-94
12.1-15	Plant Radiation Protection	12.1-95
12.1-16	Plant Radiation Protection	12.1-96
12.1-17	Plant Radiation Protection	12.1-97
12.1-18	Plant Radiation Protection	12.1-98
12.1-19	Plant Radiation Protection	12.1-99
12.1-19a	Plant Radiation Protection	12.1-99a
12.1-19b	Plant Radiation Protection	12.1-99b
16 12.1-19c	Plant Radiation Protection	12.1-99c
50 12.1-19d	Plant Radiation Protection	12.1-99d
12.1-20	Control Room Shielding Perspective	12.1-100
12.1-21	Functional Block Diagram of an Area Radiation Monitor	12.1-101
12.1A-1	Flow Chart of General Analytical Method	12.1A-8

	12.2-1	PPS Containment Exhaust Radiation Monitoring Channel	12.2-12
50	12.2-2	Non-PPS Air Radiation Monitoring Channel	12.2-13

Amend. 50
June 1979

CHAPTER 12 - RADIATION PROTECTION

LIST OF REFERENCES

Section	Page No.
12.1	12.1-27
12.1A	12.1A-5

12.0 RADIATION PROTECTION

12.1 SHIELDING*

12.1.1 Design Objectives

49 The Clinch River Breeder Reactor Plant radiation protection program and shielding is designed to provide radiation protection to operating personnel, 49 the general public, and plant equipment. This program and its shield design fulfills this overall objective by allowing for the functional and biological objectives described below.

12.1.1.1 Functional Objectives

49 The overall radiation protection program and shield design must perform a variety of functions to provide radiological protection and control under normal operating conditions. These functions are:

a. To permit operating personnel access to required portions of the plant in order that they may operate the reactor and associated systems at rated power and normal capacity. This includes routine inspections and maintenance of accessible equipment.

b. To permit plant personnel to refuel the reactor, including those functions required to prepare new fuel for reactor service and ship spent fuel for reprocessing.

c. To permit access 12 days after reactor shutdown to the high radiation portions of the restricted area which are maintained as exclusion areas during normal operation. Particular cells of this designation will be designed to permit access while the reactor is operating using redundant equipment or systems located in other cells.

d. To limit the neutron activation of intermediate sodium such that the induced radiation dose rates from this radioactive source will not require the establishment of a restricted area in the intermediate heat transport system areas.

e. To maintain all areas of the site outside of the reactor containment building, reactor service building, several cells in 49 the plant service building and intermediate sodium piping penetration cells at the intermediate/reactor containment building interface as a continuous access area during normal operation.

---

*Consistent with project schedules, Section 12.0 conforms to the format and content of "LMFBR Edition of the Standard Format and Content of Safety Analysis Reports for Nuclear Power Plants."

f. To protect structural components, equipment and nuclear instruments in order that required functions are safely provided throughout the lifetime of the plant.

In addition, shield design for the control room performs radiation protection during the course of an accidient condition.

12.1.1.2 Biological Objectives

9 The extent of the radiation protection program and the biological shielding required to achieve the above functional objectives is governed by the following objectives related to the control of radiation exposure:

a. The shields as designed will provide sufficient protection to limit the radiation exposure of operating personnel and the general public to less than that required by the applicable sections of 10 CFR Parts 20, 50 and 100.

It is management policy that radiation exposures to plant personnel will be as low as is reasonably achievable (ALARA). In addition, the Project will follow, where appropriate, the guidance of Regulatory Guides 8.8 and 8.10 during the design and operation of the CRBRP. Information pertinent to assuring that occupational radiation exposures are as low as is reasonably achievable, including excerpts from TVA's Administrative Release Manual, is provided in Section 12.A. 19

b. The ALARA program and shield design permits the size of the operating crew to be established by work requirements and not radiation exposure limitations. 14

19 To achieve the above general objectives, the plant is designed to limit personnel exposure in routinely occupied restricted areas to approximately 1/10 of the limits of 10 CFR 20. Other accessible restricted areas of the plant also have correspondingly low radiation levels relative to their intended occupancy.

The plant design precludes established airborne radioactivity areas, as defined by 10 CFR 20, under normal operating conditions. Some portions of the restricted areas will be subject to potential leakage of radioactive noble 19 gases. Leakage will be controlled to concentrations less than 1/10 those shown in Table I of Appendix B, 10 CFR 20 or less than 1/10 of the design radiation dose rate, whichever is less for routinely occupied areas. The corresponding allowable fractions of 10 CFR 20 for non-routinely occupied areas and limited 41 access area (Radiation Zones II and III) is 1/10 of CFR 20 values.

Licensed material being inspected or processed as part of refueling and waste disposal operations will be shielded to meet radiation exposure objectives stated above. Transient sources handled in these operations will 19 be shielded to ≤200 mrem/hr or radiation exposure control provided by establishing temporary exclusion areas in special cases. Typical transient sources are fuel and reactor components being removed from the reactor vessel enroute to the Ex-Vessel Transport Machine (EVTM) or Auxiliary Handling 19 Machine (AHM). These controls will apply to port adapters, floor valves and similar equipment.

12.1.2 Design Description

12.1.2.1 General Shielding Design Criteria

Occupancy requirements and access controls determine what radiation dose rates will be allowed in all in-plant and on-site areas in order to assure that the design objectives will be met. Each area, where plant associated radiation fields are expected to exist, is a restricted area, and is classified as one of five types listed in Table 12.1-1. Areas where plant associated radiation is expected near background levels during normal operating conditions are unrestricted areas, and are controlled by general plant security. Unlimited access of plant personnel and authorized visitors is permitted in these areas.

Scaled plan views of the plant showing the radiation zone classifications for buildings containing significant radiation sources or equipment for the treatment of radioactive fluids are presented in Figures 12.1-1 through 12.1-21. The legend on Figure 12.1-1 provides necessary descriptive information.

Where access to the plant area is required, either on a continuous or a periodic basis (Zones I through IV), shielding is provided to obtain the dose rate in the range specified in Table 12.1-1. For example, the Reactor Containment Building operating floor, shown on Figure 12.1-2, is shown as Zone I and the shielding design objective is to permit a dose rate of 0.2 mrem/hr. The cooler cell (cell 152) is shown as Zone II and the shield is designed to permit 2.0 mrem/hr. The area around the reactor cavity shield shown on Figure 12.1-5 is a Zone III and is designed to permit a dose rate of 10 mrem/hr even though the range of permissible dose rates for this zone are 5.0 to 100 mrem/hr. Zone IV would be designed for 100 mrem/hr with the permissible dose rate range 100.0 to 5000 mrem/hr. The cells and/or areas not shown in Figures 12.1-1 through 12.1-21 are unrestricted.

The penetration shields will be designed so that the general area dose rate at the nearest work location will not be increased by more than 20%. Peak dose rates at penetrations in normally accessible locations will not exceed a factor of 3 greater than the area design dose rate.

A discussion of shield design procedure to include bias over and above the "best estimate" source terms is provided in Section 12.1.3. The total anticipated design bias, as it effects the biological dose rates in most areas of CRBRP containing primary sodium sources, is conservative by a factor of approximately 2.5.

Although these figures are to scale, the reduction in size of these drawings preclude accurate scaling of the thickness of the shields' walls. Some shielding wall thicknesses are listed on Tables 12.1-2 through 12.1-5. In general, the largest sources of radioactivity are located in the reactor containment building (RCB) and the reactor service building (RSB). Portions of these buildings are restricted areas under 10 CFR Part 20 provisions. Additional shielding arrange-
49 ment views are shown on the figures in Section 1.2.

The intermediate building will be an unrestricted area during normal operations, except for the penetration vaults where the inter-
52 49 mediate sodium piping penetrates the reactor containment shell, the confinement building and enters the intermediate building. The interior of the vaults will be designated Zone V during normal operation; however, the general area exterior to these vaults will be unrestricted. The intermediate building also has a shielded cell which contains primary sodium storage tanks. On an infrequent basis, primary sodium which has decayed 12 or more days after reactor shutdown will be stored in these tanks. This cell can be locked, and is separately cooled with an isolation ventilation system. During use of this vault for primary sodium storage, this cell will be posted as a high-radiation area, but the area external to the cell walls will be an unrestricted area.

49 The location of the main access control point to restricted areas is at the health physics station in the plant service building. All personnel and visitors entering and leaving restricted areas of the plant will normally be required to pass through this control point.

Several cells of the plant service building will be restricted areas. These cells will be utilized as radiochemical laboratories,
49 counting rooms and associated offices. Other principal buildings, the control building, steam generator building, and turbine generator building
49 will be unrestricted areas during normal operation.

12.1.2.2 Shield Design Primary Heat Transport and Auxiliary Systems

This section presents the criteria and design for the shield walls, roofs and floors for primary heat transport and auxiliary system cells. The criteria and design description for shield penetrations, valve and sampling operations are also given.

The thicknesses of most shield walls are set by shielding require-
ments with the thicknesses of the remaining walls defined by structural requirements. The shielding walls are mainly constructed of ordinary concrete and erected according to the Regulatory Guide 1.69 and
49 ANSI-N101.6-1977 for the construction of concrete shields. In some local areas, other shielding materials, such as steel, are used. Shield walls constructed of blocks were avoided for seismic considerations. Those shield walls or portions of shield walls, that are subject to removal to permit access for equipment repair or replacement, are designed to be knocked out and replaced, or provided with removable access plugs.

Shield walls are erected around any plant component or piping if the postulated radiation source term at any time during plant life could result in dose rates greater than the specified radiation zoning. 49 The design source terms are those discussed in Section 12.1.3. In order to minimize the number of areas in the plant with high radiation levels, the cells which contain significant radioactive sources tend to be grouped together within the plant.

The shielding calculations for determining the wall thickness 49 use computer codes with a detailed geometric model which represent the significant three-dimensional aspects of the sources and shields. 44 Outside the reactor cavity the sources used are the activated sodium and fission and corrosion products (as solids, liquids or gases).

The computer programs employed in the design of the shield walls use the discrete ordinates transport and point kernel integration techniques to analyze the bulk shielding provided by the walls. In areas of the shield containing discontinuities such as ducts and pene- 44 trations, the design methods employ transport and point kernel scattering methods to provide shielding equivalent to the surrounding bulk shielding in the vicinity of the duct or penetration. The computer programs used 44 for the shielding calculations were DOT III W, QAD, LSD-II and SCAP-BR. A detailed synopsis of these programs is given in Appendix A.

Shield walls with locked access doors are used to isolate the high radiation areas (Zones IV and V) of the plant. In addition, these areas (Zone IV and V) will be equipped with audible or visible alarms which signal to a control point that a high radiation area is being entered. All locked areas will be equipped such that no individual can be prevented from leaving a radiation area.

Access to cells containing radioactive bearing components is provided through the walls and/or ceiling. The effectiveness of the shielding in meeting design dose rates external to the cells is maintained by the use of shield doors or shield plugs which, if made of concrete, generally have the same thickness as the shield wall penetrated. If other shielding materials are used, the design thickness provides shielding equivalent to the shielding of the wall. Steps and offsets are provided in all shielding doors and plugs to minimize radiation streaming.

Shield Penetration Design

The necessary shield wall penetrations, such as for piping, valve actuators, electrical cables and ventilation ducts are located so that they have the least effect on whole body dose rates in the accessible areas outside the shielded cells. Penetrations are generally designed to provide approximately the same attenuation of radiation as the shielding wall through which they pass. For areas where multiple penetrations are required, shielded cavities and chaseways are provided.

The shielding considerations employed in the design of the penetration are as follows:

a. Piping Penetrations - The piping penetrations of cells which contain radioactive sources are mainly for primary and intermediate sodium (liquid) and for the RAPS/CAPS system (gas). Extensive thermal insulation is required for the sodium lines necessitating annular gaps between the sodium piping and the shield walls. The primary sodium is the dominant radioactive source. In the design of penetrations of the reactor cavity, neutron streaming is a prime concern. The primary heat transport piping is located in pipe chaseways to prevent neutron activation of the equipment in the PHTS cells. Other penetrations are located high in the reactor cavity where the neutron flux is low. Penetrations for lines carrying radioactive sources which go from the RCB to other buildings such as the primary sodium fill and drain pipes and the RAPS pipes are located in shielded galleries on both sides of the containment penetration. The 24 inch diameter intermediate sodium pipes enter into a series of shielded compartments as they pass through containment into the intermediate building.

b. Valve Penetrations - For manually operated valves in radioactive cells, reach rods which penetrate the shield walls are provided. The reach rods are solid metal, guided with metal sleeves, and the annular spaces between the sleeves and the shield wall are filled with grout. A more detailed discussion of valve arrangements is presented in a following section.

c. Electrical Penetrations - Electrical instrument and control lines enter radioactive cells through standard multiple cable penetrations. These penetrations are located as high in the cells and as far away from the sources of radiation as possible. Most of the EI&C lines which pass through the containment do so above grade and require no special radiation shielding. Those that penetrate the containment into radioactive cells are located near the ceilings of manned access areas and enter high in the RCB cells.

d. Recirculating Gas Cooler Ducts - The various inert gas cells containing radioactive sources are provided with penetrations for gas cooling ducts. These ducts are provided with sufficient shielding to meet the radiation zone classification outside the cell. Generally, the ducts contain multiple 90° bends with offset lengths between bends sufficient to prevent radiation streaming through the ducts. Shield wall areas where several ducts penetrate in the same location are provided with shielded cavities through which the ducts are run. Dose rates in the

vicinity of the fan/cooler equipment are designed to meet the zoning requirements of the area which are compatible with the maintenance and inspection requirements for these units.

Valve and Valve Operating Stations

The four arrangements used for manually operated valves that are used in conjunction with process equipment are:

a. Valves located and operated in an equipment cell or enclosure. This arrangement is used only when the dose rate in the cell is compatible with personnel access requirements to the valves. In general, prolonged valve operation and maintenance will require health physics supervision.

b. Valves located and operated in a radiation zone outside an equipment cell. The criterion for this arrangement is that the whole body dose rate in the close vicinity of the valves cannot exceed the allowable radiation rates for the zone as described in the previous section.

c. Valves located in an equipment cell but operated from behind the shield wall by means of a reach rod mechanism. With this arrangement, the penetration effect of the shield wall is minimized and the dose rate in the vicinity of the hand wheel operator is approximately the same as if the reach rod were not present. Valve body maintenance and replacement is handled as in the first arrangement.

d. Valves located in a valve gallery. Typically, a number of valves share a valve gallery. These valves serve one or a few similar plant components. The valve gallery forms a shielded enclosure for the valves with operations using the valve stems or reach rods through the walls. The valve gallery is designed to allow maintenance without necessarily having to shut down, drain, vent or remove the components they serve. This requires having as little radiation in the gallery as possible by keeping pipe lengths short, by avoiding annular spaces between pipes and pipe sleeves, and by locating the valve gallery away from primary sources.

49

Sample Stations

There are two types of arrangements used for locating stations for sampling radioactive materials:

a. Sampling stations located in a shielded cell or cavity and remotely operated. This arrangement is used when samples of highly radioactive materials, such as primary sodium, are required. The samples are processed within the shielded cell

by means of remote manipulators. If a sample is required to be brought outside the cell, a remotely operated and shielded transfer mechanism is used. The sample is then transferred to a shielded cask or appropriately handled according to its size and specific activity. Dose rates to personnel performing the sampling operations will not exceed the dose rates allowed in the operating galleries.

b. Sampling stations operated from outside a shielded cell. This arrangement is used for obtaining low activity level samples, such as gas from the CAPS lines in the RCB. The criterion for locating the sample stations outside of shielded areas is that the dose rate near the sampling unit cannot exceed the allowable radiation rate for the zone. Local shielding around the sampling unit is provided as needed.

12.1.2.3 Shield Design - Reactor and Enclosure System

The design description and criteria for the reactor system and reactor enclosure system shielding are presented in this section. The design configuration of this shield system is described in Section 4.1 and 4.2 and in later discussions.

The reactor system and enclosure system shield provides the primary shield system required to attenuate the neutron and gamma radiation from fission, activation, and neutron reactions with materials to levels consistent with the radiation zone specifications for areas adjacent to the reactor enclosure. The main elements of the reactor and enclosure system shielding are:

a. The in-vessel shielding provided to protect key structural components, shielding provided by in-vessel core support structures, the sodium pool, the reactor vessel and guard vessel.

b. The closure head assembly which forms the upper boundary of the reactor vessel.

c. The concrete reactor cavity wall and floor which is the outer and lower boundary of the cavity which contains the reactor system.

49 d. The steel reactor support ledge and associated support area shielding located to supplement shielding at the closure head assembly and support ledge interface.

The reactor and enclosure system shield elements in combination provide an overall shielding system to achieve radiation levels consistent with radiation zone specifications for the head access compartment and corridors exterior to the reactor cavity wall. Each of these areas are
45 accessible during full power operation and are specified as Zone III.

The configuration and thicknesses of the shielding internal to the reactor vessel have been principally defined by mechanical and structural requirements of the in-vessel components in order to maintain a safe and operable configuration under design steady state, transient, and accident conditions. To achieve these design objectives, in-vessel shielding is provided to insure that reactor core support structures and the reactor vessel have adequate structural properties following neutron irradiation over the design lifetime of the component. Shielding thickness requirements for the closure head assembly, reactor vessel support ledge, and reactor cavity wall are determined based on mechanical, structural, thermal and shielding requirements. Additional shielding and special design configurations are provided for penetrations through the closure head assembly to reduce radiation streaming. Gaps through the reactor vessel support area and streaming paths formed by the primary piping and recirculating gas cooler duct penetrations through the reactor cavity wall also receive special treatment.

Penetrations of the reactor closure head assembly require shielding to attenuate radiation due to sodium activation, argon cover gas and neutron sources. These penetrations are shielded as required by the following methods:

a. In-vessel shielding is located below the reactor head and provides both thermal and radiation shielding for the reactor vessel head and sufficient depth to achieve required offset gap geometries.

b. The penetration gaps are minimized in width and the gaps are stepped wherever possible.

c. The component penetrating the head is designed to have a solid structure equivalent to the closure head assembly.

d. Local shielding is provided in the head access compartment as required.

12.1.2.4 Specific Shield Design Parameters by Building

General biological radiation protection design objectives for the plant shielding and the criteria for shielding design to meet those objectives are given in the previous subsections. In the following subsections, descriptions of the shielding provided by the various plant buildings and by their internal structures are provided. Occupancy and access restrictions are given.

Reactor Containment Building

The shielding in the reactor containment building (RCB) has two general classifications: (1) the enclosure system shielding consisting of in-vessel, reactor cavity and head access area shielding and (2) the primary heat transfer system and auxiliary system shielding. Plan views of the cell structure and its associated shielding can be seen on Figures 12.1-1 through 12.1-7. Additional shielding outside of the Containment Building is provided by approximately 4 feet of reinforced concrete which make up the Confinement Building surrounding the Containment. 18

The Head Access Area (HAA) is a 44' square by 14' high area providing access to the reactor closure head (elevation 802') from the RCB operating floor (OF) at the 816' elevation. The HAA is a Zone III radiation area with design criteria of ≤25 mrem/hr (below the OF elevation) and ≤10 mrem/hr at the operating floor elevation. The reactor vessel, its closure assembly, in-vessel shielding and support structure provide shielding for the head access area. Although these components provide a conservative bulk shield design, their design criteria are also based on mechanical, thermal, and structural design considerations (see Chapter 4.0). The reactor vessel closure assembly (closure head and steel/laminar shield array) has a total material thickness of 53 inches. Therefore, no additional shielding is planned between the HAA and operating floor, as the HAA shield design is adequate to meet its design criteria. 40 59

40

The reactor support ledge design provides an annulus between the support ledge and reactor vessel. This annulus is closed at the top by the reactor vessel support structure (support ring and vessel flange) which has a steel thickness of ∿30 inches. To reduce general area radiation levels in the HAA, a B_4C shield ring is installed at the entrance to the annulus along the bottom of the support ledge. A steel ring is installed at the bottom of the reactor vessel flange to reduce annular gap streaming. The B_4C shield is ~13½ inches thick, with the steel ring providing about 9 inches of carbon steel as complementary shielding. The shield design parameters associated with the HAA are summarized on Table 12.1-2. 59 40 49

Penetration shielding is an important aspect of the overall shield design for the HAA. These shields are necessary to control radiation levels from radioactive cover gas sources and primary sodium, gamma, and neutron streaming. Two of the major penetrations are associated with the Control Rod Drive Mechanisms (CRDM's) and the three rotating plugs in the reactor closure head. In addition, the flow of radioactive cover gas from above the sodium pool to components located within the HAA and above the HAA shielding must be prevented. This potential source is controlled by sealing cover gas flow annuli and purging the annuli formed by components penetrating the closure head with purified recycled cover gas.

Penetrations in the HAA are listed in Table 12.1-2. By limiting the size of gaps provided for mechanical or structural reasons, by eliminating straight-through streaming paths with stepped design configurations, providing mechanical seals and the use of purified purge gas, the need for local penetration shields in the HAA will be minimized.

The primary heat transfer and auxiliary system shield design parameters are summarized in Tables 12.1-3 and 12.1-4. During full power operations, all areas in the RCB above the operating floor at elevation 816 feet - 0 inches are accessible on an unlimited, full time basis (Zone I). The main access stairways, elevators and corridors to levels below the operating floor, located in the NE, SE and SW corners of the RCB are Zone II radiation areas. Equipment below grade requiring periodic checking or maintenance are generally located in areas where the design radiation dose rates are 10 mrem/hr or less (Zone III). The cells in the RCB containing significant radiation sources are not accessible during power operation, except for cells such as the sodium makeup pump cell which can be isolated from the radiation source during plant operation. The RCB shielded cell closures have been designed based on accessibility requirements, personnel occupancy factors, and the ALARA guidelines.

The shielding surrounding the primary heat transport inlet and outlet piping as it penetrates the reactor cavity shield (see Figure 12.1-4, view at elevation 780, flowmeter cells) is designed to control the gamma dose rates in the HAA and Primary Pump Motor Cells and to minimize the neutron flux in the adjacent primary heat transport system cells. The neutron flux will be reduced to approximately 1×10^3 n/sec-cm^2 in order to preclude significant activation of the intermediate sodium. The dose rate on the surface of the intermediate heat transport system components will be less than 0.2 mrem/hr.

The radioactive argon processing system (RAPS) compressors, together with the RAPS vacuum, surge, cold box, and recycle argon tanks are located at elevation 733. The cell arrangements and required shielding are shown on Figure 12.1-7. Shield design parameters associated with these components are summarized on Table 12.1-4.

Reactor Service Building

Shielding in the Reactor Service Building (RSB) protects personnel during normal operations and anticipated operational occurrences, from radiation sources contained in the components and piping of the following systems and facilities:

a. Cell Atmosphere Processing System (CAPS)

b. Ex-Vessel Storage Tank (EVST) and supporting systems

c. Fuel Handling Cell

d. New Core Component Storage

e. Radioactive Waste Disposal System

The cell arrangement and the required RSB shielding is shown on Figures 12.1-8 through 12.1-17.

The radiation zoning criteria allows for continuous access (Zone I) on all elevations 816 feet - 0 inches and above (except for the decontamination facility of the waste disposal system), in the main stairwell and elevator shaft, and in the fuel handling cell operating gallery and mass spectrometer cell. The principal corridors and accessible areas outside of the equipment cells below the 816 feet - 0 inches elevation level are designed for 2.0 mrem/hr (Zone II). Areas requiring infrequent access are designed for 10 mrem/hr (Zone III). The RSB shielded cell closures have been designed based on accessibility requirements, personnel occupancy factors, and the ALARA guidelines.

The gas processed by CAPS can be radioactive. The principal source of radioactivity is the gas sampling system.

The RSB systems shield design parameters are summarized in Table 12.1-5. For additional information on the functions performed by these systems see Sections 9.5 and 11.3.

Plant Service Building

The combined laboratory is located within the radiological restricted area of the plant service building. The radiation zone for these facilities is Zone 1, which limits the radiation level to 0.2 mrem/hr or less. An analysis cell is located in the laboratory area and will be used for analysis and containment of radioactive sodium samples. The cell, designated as radioactive zone V, is constructed to provide sufficient shielding to maintain the radiation level in the combined laboratory at 0.2 mrem/hr or less (zone 1). The combined lab and analysis cell arrangement is shown in Figure 12.1-19E. The radiation level will be controlled by the size and nature of the radiochemical sources. The samples will be shielded, allowed to decay, or limited in mass (i.e., source intensity) to control the radiation levels within the facility zoning criteria.

Intermediate Bay and Steam Generator Building

Normal radiation areas in the intermediate bay are confined to the intermediate piping penetration cells. These cells contain two 24 inch diameter intermediate sodium pipes near the 800 feet elevation which penetrate into the primary heat transfer cells of the RCB. With insulation and trace heating, the penetrations are approximately 50 inches in diameter. The shielding of these penetrations requires a labyrinth arrangement of shielded compartments. These compartments are not accessible (Zone V) except when the plant is not operating (Zone III).

Primary sodium can be stored in the primary storage tanks on the 733 feet elevation. This sodium will have been decayed 12 or more days before transfer. When primary sodium is stored in this cell, the area will be treated as a high radiation area.

The arrangement of these cells is shown on Figures 12.1-18 through 12.1-20. All other portions of the intermediate bay and steam generator building are unrestricted and do not require radiation shielding.

49

Control Room

The control room shield and heating and ventilation system are designed to limit the radiation exposure of operating personnel to 5 Rem following and during duration of a postulated major radioactivity release. The basis of this design is to meet the intent of Criterion 17 of CRBRP GDC.

The control room is located in the control building approximately 33 feet northwest of the containment building (see Figure 1.2-10). An isometric view of the control room is shown in Figure 12.1-22.

The 4 foot thick concrete confinement dome provides protection for control room personnel from the direct dose due to an assumed inventory within the containment building of 100% noble gases 60% halogens and 1% of all other fission products. The radiation source is assumed to be distributed uniformly in the RCB containment above the operating floor.

An additional direct dose was calculated from the radioactive cloud which is assumed to be released from the containment under a hypothesized accident condition of 0.1% volume per day. This release is from the annulus through annulus filters and 1% through bypass leakage.

49

49 The total exposure of control room personnel also considers the whole body dose to personnel due to noble gases which enter the control room heating and ventilating system. This system has "absolute" and "charcoal" filters for removing the plutonium, halogen and particulate portion of containment leakage (see Section 9.6).

49

The calculated total integrated dose for an individual in the control room for the duration of the postulated release is detailed in Section 6.3.

12.1.3 Source Terms

Concentrations of radioactive nuclides in the reactor and plant systems and inventories of radioactive nuclides in the reactor components and various process equipment are developed for the maximum conditions during the 30 year plant life. The radioisotope concentrations in the reactor components, primary sodium coolant and argon cover gas are developed from consideration of the following:

a. Neutron activation of,

1. primary sodium coolant and its trace impurities

2. argon cover gas,

3. metallic reactor components and subsequent release to the primary coolant through corrosion processes.

b. Production of fission products in the reactor core and blanket assembly fuel rods and partial release to the primary coolant through fuel rod cladding failures,

c. Plutonium and other actinide isotope inventory and production in core and blanket assembly fuel rods during operation and release through fuel rod cladding failures.

d. The production of tritium by the following neutron interactions:

1. The interaction of neutrons with B^{10} in control rods.

2. The interaction of neutrons with lithium from reaction of B^{10}.

3. Ternary fission.

A detailed discussion of the release fractions and the mathematical models used to determine specific activity of the fission and corrosion products in the primary coolant and cover gas is provided in Section 11.1.

The source terms which result from neutron activation of primary coolant and reactor structures are based on detailed two-dimensional neutron flux distributions calculated for various operating times during plant life. Neutron flux distributions and activation rates are developed from the use of evaluated nuclear data files (ENDF/B-III).

Application of the calculational methods are consistent with FFTF design practices and verification of methods to predict neutron flux levels and principal activation rates in sodium cooled reactor systems have been demonstrated in analyses of experimental programs conducted at ORNL and ANL. (See Appendix 12.1.)

12.1.3.1 Primary Sodium Coolant Sources

The specific activities of significant radioisotopes in primary sodium coolant are shown in Table 12.1-6. The specific activities (Ci per gram of sodium) listed are based on the following design parameters and assumptions:

a. Nominal operating power of 975 MWt for 5, 10, and 30 years with 274 full power days per year. Biases included in the Na^{24} radiation source term include a factor of 1.75 to account for uncertainties in activation rate, flux levels (stretch power of 1121 MWt or power uncertainties), spectra, temperature and quantity of sodium coolant and coolant flow distribution. Additional bias included in the radiation shield wall design is a factor of 1.5 to allow for physical variations in shield wall densities and thicknesses, physical arrangements and wall penetrations and calculational uncertainties. These biases as applied to the biological shield design and radiation source inventory provide sources which included consideration of all anticipated CRBR reactor operations, including stretch operation.

b. Continuous operation of the reactor with failed fuel rods generating 1 percent of the total power.

c. Fission products are released to the sodium coolant from failed fuel rods consistent with the model discussed in Section 11.1.

d. Plutonium and other actinides are released from the defective fuel rods. The design basis limit for plutonium in the primary coolant is 100 ppb. 49

e. The percentage of each isotope assumed to be in solution of entrained in the sodium, deposited on the cold traps, or deposited on a wetted reactor or primary heat transport system surface are listed in Table 12.1-7.

f. The weight of primary sodium in the reactor vessel, heat transfer loops, overflow tanks and cold traps is 6.4×10^8 grams.

The primary coolant source data defined in Table 12.1-6 is the basic source data for use in design of the shield walls outside of the reactor primary shield during operating conditions. This includes shielding for the primary heat transfer cells, cold trap cell, the overflow tank cell and other cells containing primary sodium. The primary isotope of concern is Na^{24} which is the dominant factor in the source. 49

Primary Plugging Temperature Indicator (PPTI) and Primary Sodium Sample Package (PSSP) Source Terms

The PPTI and PSSP components contain primary sodium. The inventory of isotopes in the PPTI and PSSP, based on the sources for primary sodium shown in Table 12.1-6, are given in Table 12.1-8. The inventory is based on 30 years of reactor operation with failed fuel as described in b, c, and d of primary sodium coolant sources above.

Primary Heat Transport System Surface Sources

The primary heat transport system surface activities for each isotope are shown in Table 12.1-9. The surface activities ($\mu Ci/cm^2$) are based on the following design parameters and assumptions:

a. The operating parameters are the same as discussed in Items a through e for the primary sodium coolant sources.

49 b. The corrosion, fission, and fuel activities deposition occurs on a wetted area of 9.5×10^7 cm^2.

The surface activity source terms on primary components can be used to estimate the upper limit radiation level from primary system sources where the Na^{24} has decayed to insignificant levels and the sodium has been drained from the component.

49 Cold Trap Sources

The primary and intermediate cold trap radioisotope inventory is shown in Table 12.1-10. The activities (curies/cold trap) shown are based on the following design parameters:

a. The operating parameters are the same as discussed in Items a through e of primary sodium coolant sources.

b. All fission products, corrosion products and transuranium isotope releases are conservatively assumed to accumulate on only one cold trap for 15 years.

49

All fission products which contribute in excess of 10 curies are listed. Numerous other fission products will be deposited in smaller amounts. None of these will contribute to the shutdown dose rate at 10 days after shutdown. The percentage of isotopic release deposited on the cold trap is shown on Table 12.1-7.

During operation and immediately after shutdown, the dose rate will be controlled by the Na^{24} activity. Approximately 94 cubic feet of sodium will be contained in a cold trap. At shutdown, the Na^{24} activity will be approximately 66,600 curies. The Na^{24} and Na^{22} activity at 10 days after shutdown are shown for information in Table 12.1-10.

12.1.3.2 Radioactive Argon Cover Gas Sources

Fission product and activation gases are removed from the primary sodium by diffusion into an argon cover gas which is contained above the primary sodium pool in the reactor vessel, primary pumps and overflow tank. The release rate of fission product, activation and tritium source to the cover gas and its resulting concentrations are shown in Table 12.1-11 and are based on the following design parameters and assumptions:

a. Continuous operation of the core having fuel cladding failures in fuel rods generating 1 percent of the total power.

b. Noble gas fission products are released to the sodium coolant through fuel cladding failures consistent with the release model described in Section 11.1.

c. The noble gases are completely released from the sodium to the cover gas volume above the sodium pool in the reactor without radioactive decay.

d. The volume of the cover gas above the sodium pool is 409.6 standard cubic feet and the purge rate of cover gas to the radioactive argon processing system is 3.65 scfm.

e. The noble gas release rate to the cover gas above the primary pumps is based on the estimated rate of gas entrainment in the primary sodium. The noble gases include both gases entrained from the reactor vessel cover gas and noble gases released directly to the primary sodium from fuel and activation sources. The estimated volume of the primary pump cover gas is 146 cubic feet (68.2 scf). The primary pump cover gas concentrations are shown on Table 12.1-11a.

Radioactive Argon Processing System Sources

The radioactive argon processing system (RAPS) contains a number of significant radioactive sources. These sources are: (1) the RAPS Vacuum vessel, (2) the RAPS compressors, (3) the RAPS surge tank, (4) the RAPS cold box, (5) the RAPS recycle argon vessel, and (6) the RAPS noble gas storage vessel. The inventory (in curies) for each isotope are shown in Tables 12.1-12, 12.1-13, 12.1-14, 12.1-15, 12.1-16, and 12.1-17. The information contained in these tables is based on the following design parameters:

a. The operating parameters are the same as discussed in items a through d of Radioactive Argon Cover Gas Sources.

Table 12.1-17a shows the isotopic inventory of the RAPS recycle argon vessel during periods of RAPS cold box maintenance. This information is based on the following design parameters:

A. The maintenance of the cold box is for a time period of up to 30 days. The fuel failure rate during this time period is 0.3%.

B. The release parameters given in section 12.1.3.2 (items b through d).

Cell Atmosphere Processing System Sources

The cell atmosphere processing system (CAPS) source terms have the same basis as those described for the "Design" condition in Section 11.3 except the Failed Fuel Monitoring System input corresponds to 1% failed fuel. This is consistent with the operating parameters given in items "a" through "d" of the Radioactive Argon Cover Gas Sources.

The source terms for CAPS components are: (1) the CAPS vacuum vessel; (2) the CAPS compressors; (3) the CAPS surge tank; and (4) the CAPS cold box. The inventory (in curies) for each isotope are shown in Tables 12.1-12a, 12.1-13, 12.1-14a, and 12.1-15a.

Gas Sampling System Sources

The significant gas sampling systems are: (1) the Gas Tag Sampler; and (2) the cover gas monitor. The activity inventory for these sources are shown in Table 12.1-20.

Ex-Vessel Fuel Storage Tank Sources

The ex-vessel fuel storage tank (EVST) is designed to hold a maximum of 650 new and expended fuel assemblies (Section 9.1.2.1.2). The shield is designed to accommodate the radiation from a full loading of the EVST. The gamma source terms shown in Table 12.1-21 are based on the following design parameters:

a. A complete unloading of the fuel assemblies in an equilibrium core is placed in either the upper or lower tier in contiguous positions nearest the part of the shield being considered. The source term is for 198 assemblies, which is a more conservative value than the 162 fuel assemblies in the core. Fuel assemblies added to other locations in the EVST would have lower activity and would be shielded by the 197 assemblies. Therefore, the source terms in Table 12.1-21 are conservative values for a full EVST loading. 59

b. For conservatism it is assumed that the equilibrium core is in place in the EVST four days after reactor shutdown.

The EVST inherent neutron source is shown in Table 12.1-22. This source term is based on the same design parameters as those given for the gamma sources in a and b above. The neutron energy spectrum is approximately equivalent to the Pu fast fission spectrum. The neutron source by isotope is in the same proportion as shown in Table 12.1-28.

The EVST fission product and transuranium elements inventories are developed from the nuclear design data and reference equilibrium core and blanket management schemes. The fission product inventory and its corresponding gamma energy spectrum, shown in Table 12.1-21 were derived using the fission yields contained in the RIBD code library and consider the cyclic operation and core/blanket management of the equilibrium cycle.

Ex-Vessel Storage Tank (EVST) Sodium Sources

The EVST sodium serves as the coolant for the expended fuel. It is also used as a transfer medium between the reactor vessel and EVST for new and spent fuel. In serving this function, it becomes contaminated with primary coolant sodium and its radioactivity. Table 12.1-23 shows the EVST sodium specific activities based on the following design parameters:

a. The sodium in the reactor vessel is characterized by the specific activities shown in Table 12.1-6.

b. Fuel is transferred to the EVST once per year. 171 assemblies are transferred from the reactor to EVST, and vice versa for each refueling.

c. Each transfer of a core component pot places 2-1/2 ft^3 of primary Na in EVST Na and vice versa.

d. The first transfer takes place 44 hours after reactor shutdown on the average the minimum time will be 26 hours.

e. The time between successive transfers is 1.5 hours.

49 f. The volume of EVST sodium is 9000 ft^3.

g. The effect of the EVST cold trap is not considered.

EVST Cold Trap Sources

The EVST cold trap sources result from the deposition of EVST sodium activity on the cold trap. The activity inventory on the EVST cold trap is shown in Table 12.1-24. The following design parameters have been used to develop these activities:

a. The EVST cold trap is as efficient as the primary cold traps.

b. The activity deposited on the cold trap is based on the EVST sodium activities shown in Table 12.1-23.

c. The cold trap sodium volume is estimated at 140 ft^3.

EVST Plugging Temperature Indicator (EPTI) and EVST Sodium Sample Package (ESSP)

The EPTI and ESSP components contain EVST sodium. The inventory of isotopes in the EPTI and ESSP, based on the source term for EVST sodium shown in Table 12.1-23, are given in Table 12.1-25. The inventory is based on 30 years of reactor operation with failed fuel as described in b, c and d of "Primary Sodium Sources" (Section 12.1.3.1).

19 New Core Component Sources

The primary radiation source in the New Fuel Unloading Station and the New Fuel Shipping Container will be the inherent neutron source in new fuel assemblies. Table 12.1-26 shows the inherent neutron source strength for a single new fuel assembly. The design parameters used to obtain this source term are:

a. The fuel assembly is loaded with LWR recycle plutonium which contains 2 percent Pu^{238}.

b. The active volume of an assembly is 1.17×10^4 cm^3 over a 91.44 cm height.

Subcritical multiplication due to grouping of fuel assemblies shall be
44 considered by the system designer.

Fuel Handling Cell

The fuel handling cell (FHC) is designed to handle and inspect spent fuel in preparation for shipment off-site. The maximum gamma ray source term as a function of energy is shown in Table 12.1-27 for an expended assembly at four days after reactor shutdown. The maximum inherent neutron source is shown in Table 12.1-28 for three expended assemblies 80 days after reactor shutdown. These source strengths are based on the following design parameters:

a. The design assembly produces power, just before discharge, at 127 percent of the average assembly.

b. The fuel is being handled in the FHC at four days after reactor shutdown.

c. Each assembly has a volume of 1.173×10^4 cm^3 and an active height of 91.44 cm.

d. The energy spectrum is derived from the ENDF/B and RIBD code library as discussed previously.

The FHC shield design should accommodate the design assembly source given in Tables 12.1-27 and 12.1-28. The energy distribution of the inherent neutron source shown in Table 12.1-28 was treated as a Pu fast fission spectrum.

Fuel Handling Cell Argon Circulation System Sources

The FHC service cells have the following design basis:

A. FHC Argon Filter Cell

(1) Complete release into the FHC of all noble gas, halogen, and volatile fission products from the gaps and fission plenums of two failed fuel pins, is assumed. No credit is taken for iodine attenuation by sodium, since the pin failures are assumed to occur during handling of bare fuel assemblies.

(2) For conservatism in the filter shielding design, it is assumed that 100% of the released Cs and I are collected in the filters. For conservative cell shielding design it is assumed that only 60% of all Cs and I released is collected on the filters. The remaining 40% is equally distributed in the three support cells, and in the FHC itself. Since the filters are frequently removed, there will be no buildup of long-lived Cs-137.

(3) Activities are based on a decay time of 80 days.

(4) A FHC volume of 10,700 scf is assumed. Equipment (piping, filter banks, transitions) have void volume of 224 scf/cell.

(5) Cell specific activities are based on the radioactive releases (item 1) divided by the volume of the FHC.

Fuel handling cell, filter cell specific activity and FHC filter cell equipment activity appear in Table 12.1-29.

B. FHC Argon Blower Cell

Ten percent of the Cs and I activities released from the gaps and fission gas plenum of two failed pins are deposited on the inner surface of components. The long-lived Cs-137 activity has been multiplied by a factor of five to account for subsequent pin failures during plant life at a rate of one pin every three years.

FHC argon blower particulate activity is defined in Table 12.1-29.

Gas activity in the FHC Argon Blower Cell is the same as defined above and Table 12.1-29. Equipment in the FHC Argon Blower Cell (storage tank, grapple blowers, valves, piping) have a gas volume of 46 scf/cell.

C. FHC Fan/Cooler Unit

Sources in the FHC Fan/Cooler Unit are defined on the same bases as described for the Argon Blower Cell.

Particulate activity in the FHC Fan/Cooler Unit are the same as defined for the Argon Blower Cell.

Gas activity in the FHC Fan/Cooler Unit has the same specific activity as defined for the Argon Filter Cell.

Equipment in the FHC Argon Blower Unit cell cooler fan assembly has a gas volume of 200 scf.

D. FHC Argon Purification Unit

Sources in the FHC Argon Purification Unit are on the same bases as defined for the Argon Blower Cell.

Particulate activity in the FHC Argon Purification Unit is the same activity as defined for the Argon Blower Cell.

Gas activity in the FHC Argon Purification Unit is the same specific activity as defined for the Argon Blower Cell.

Equipment (Argon Purification Unit) in the cell has a gas volume
49 of 100 scf.

Control Room Source

The control room shielding and environmental system design requirements are stated in CRBRP GDC 17 (Section 3.1.3.1). This criterion states in part that "adequate radiation protection shall be provided to permit access and occupancy of the control room under accident conditions without personnel receiving radiation exposures in excess of 5 rem whole body, or its equivalent to any part of the body, for the duration of the accident".

The source term for calculating the direct radiation dose in the control room is shown in Table 12.1-30. This source is based on the following design parameters:

a. The fraction of equilibrium core fission product inventory released to the RCB volume above the operating floor is:

(1) Noble Gas - 100%

(2) Halogens (airborne) - 25%, Halogens (Plated) - 25%

(3) Volatile Solids - 1.0%

49 (4) Solid Fission Products - 1.0%

b. The source volume is the containment building volume above the operating floor (3,800,000 cubic feet).

49 47

c. The source is homogeneously distributed in the outer containment volume.

Table 12.1-31 provides the information on the release of radioactive fission product and fuel isotopes from the Reactor Confinement Building to the environment. This information shall be used to determine the requirements for the Control Building environmental protection system. The following information has been used to develop the releases:

a. The EOEC (end-of-equilibrium cycle) fission product inventory, as shown in Table 12.1-32, together with the inventory distribution shown above was used to determine the releases of Table 12.1-31.

b. The fission product release from the inner containment volume to the containment annulus is 0.1% per day.

c. The release from the outer annulus is 99% through the annulus filter and 1% through bypass leakage.

d. The Pu releases shown are based on the release of 1% of fuel to containment.

e. The annulus filter efficiency is 99% for solid fission products and fuel while halogens are removed at 95% efficiency.

49

Control Rod Drive Line

The control rod system drivelines are highly radioactive over a large segment of their length. The source is attributed to the neutron activation of Co^{59} and Ta^{181} found in the Inconel 718 material of construction. The source term is shown in Table 12.1-33. The design
49 assumptions are shown below:

a. The bottom end of the CRDL is located 59 inches above the top of the core.

b. The principal activation sources in the metal are the impurities of 0.10% Co^{59} and 0.05% Ta^{181}.

c. The CRDL is used in service for 15 years while the reactor is operated on a 975 Mwth for 274 days/year basis.

In addition to the activation source discussed above, the driveline will have a surface deposition source as described in Table
49 12.1-9 over its entire length.

Large Component Cleaning Cell (LCCC)

The design radiation source for the Large Component Cleaning Cell (LCCC) is a primary pump. The liquid effluents from a primary pump cleaning and decontamination also constitute the design base source for the Intermediate Activity Level System (IALL) of the Liquid Radioactive Waste System (LRWS).

The primary pump radioactive inventory is shown on Table 12.1-34A. The conditions used to develop this source are:

a. The entire activity from the surface of a primary pump is removed in the LCCC and is contained in 16,000 gallons of liquid.

b. The source represents the surface activity after 30 years of operation, with 1% failed fuel (as discussed in Section 11.1) at 10 days after reactor shutdown.

Liquid and Solid Radioactive Waste System (LRWS and SRWS)

The LRWS consists of two processing streams - the Intermediate Activity Level (IALL) System and the Low Activity Level Liquid System (LALL). The IALL System processes liquid radwaste generated in the Sodium Removal and Decontamination System. The LALL System processes liquid radwaste having an activity concentration of less than 10^{-4} µCi/cc from the floor, equipment, laboratory, decontamination, and personnel shower drains.

The IALL system design source term results from the cleaning and decontamination of a primary pump as described above (See LCCC source term).

The source terms developed from the above conditions represent the "worst case" cleaning event. It is estimated that the internals of a primary pump will be cleaned six times during the life of the plant.

The LALL waste concentration is based on the activity inventory in Table 12.1-6 after 30 years of plant operation and 10 days decay normalized to 10^{-4} µCi/cc . This is based upon dissolving 3.5 lbs per year of primary sodium in 3.1×10^{5} gallons per year of water.

For the shield design of the LRWS, it is assumed that there is no radioactive decay during collection, processing or holdup. These radioactive source terms are maximum values to be used only for the shield design.

IALL Collection Tanks

The activity inventory for each IALL Collection Tank is given in Table 12.1-34B. This inventory is contained in 16,000 gallons of water and is based on the activity inventory presented in Table 12.1-34A minus the 10% of the activated corrosion products removed by filtration.

LALL Collection Tank

The activity inventory for each LALL Collection Tank is given in Table 12.1-35. This inventory is contained in 2,400 gallons of water and is assumed to contain the activity associated with the LALL process stream liquid having the isotopic concentration obtained by dissolving 3.5 lbs of primary sodium in 310,000 gal. of water.

IALL and LALL Filters

The IALL filters are provided to remove undissolved solids from the IALL process streams prior to processing. Each IALL filter is assumed to contain: (a) 10% of the activated corrosion products listed in Table 12.1-34A, and (b) process stream liquid having the same concentration of radioactive materials as the liquid in the IALL influent stream. The IALL filter activity inventory is given in Table 12.1-36.

LALL Filters

The LALL Filters are assumed to contain the activity in the LALL process stream liquid having the isotopic Concentration obtained by dissolving 3.5 lbs of primary sodium in 310,000 gal. of water. The activity inventory of the LALL filters is given in Table 12.1-36a.

IALL and LALL Evaporator Filters

The IALL and LALL Evaporator Filters are provided to remove any undissolved solids or precipitates from the IALL and LALL evaporator feed to increase the evaporators' performance. Each filter is assumed to contain 10% of the activated corrosion products in Table 12.1-34A and the activity concentration of the IALL process stream. This assumption is used in the shield design because of the cross connection capabilities between the IALL and LALL systems. The activity inventory for each filter is given in Table 12.1-37.

IALL and LALL Evaporators

The IALL and LALL Evaporators are provided to concentrate the contaminants in the process streams remaining after filtration of undissolved solids. The shield design for each evaporator is based on the activity inventory present in Table 12.1-34B minus 10% of the activated corrosion products removed by filtration. This activity inventory for each evaporator is given in Table 12.1-38.

IALL Distillate Demineralizers

The IALL Demineralizers are used to polish the distillate effluent from the evaporators. The activity inventory for each demineralizer is given in Table 12.1-39. This inventory is assumed to contain 10% of the activity inventory carried by the evaporators (Table 12.1-38). This assumption is based on operating of the demineralizer(s) during an evaporator malfunction for a period of time between sampling intervals.

LALL Distillate Demineralizers

The Activity inventory of the LALL demineralizers is provided in Table 12.1-39a. This inventory is assumed to contain the activity inventory of the LALL Collection Tank (Table 12.1-35). This is based on accumulation in the demineralizers of the activity in one 2400 gal. batch of filtered LALL process fluid (assuming the evaporator are bypasses).

IALL and LALL Resin Traps

The purpose of the resin traps downstream of the distillate demineralizers is to catch resins which may be contaminated which have broken away from the demineralizer beds. The source term for each resin trap is assumed to contain 6% of the activity inventory of the demineralizers (Tables 12.1-39 and 12.1-39A). This reflects the activity that would be present in the resin traps, should a rupture of the demineralizer resin retention devices occur. The activity inventory of the IALL resin trap is provided in Table 12.1-40, and the inventory of the IALL resin trap is provided in Table 12.1-40A.

Concentrated Waste Tank

The Concentrated Waste Tank in the SRWS receives the concentrated radioactive wastes from the IALL and LALL evaporators. The activity inventory is given in Table 12.1-43.

Decanting Tank

The Decanting Tank collects the powdered resin waste from the spent IALL and LALL Distillate Demineralizer resins. The activity inventory for the Decanting Tank is based on isotope inventory of the spent Distillate Demineralizer resins in Table 12.1-39 and 12.1-39A. The activity inventory is given in Table 12.1-44.

Decantate Filters

The Decantate Filters remove undissolved solids from the liquid decanted off the Decanting Tank. These filters are assumed to contain 1% of the activity of the Decanting Tank. The activity inventory is given in Table 12.1-45.

Solid Radwaste Drums

Concentrated liquid radwaste and spent resins will be drummed, solidified and stored in the SRS in the Radwaste Building. Up to 136 drums per year containing concentrated liquid waste will be stored in the high activity drum storage vault. Each drum will contain 30 gallons of concentrate from the Concentrated Waste Tank. The activity inventory per drum is shown in Table 12.1-46. Up to 17 drums per year containing spent demineralizer resins will be stored. Each drum will contain 17 gallons of spent resins and from the Decanting Tank. The activity inventory per drum is shown in Table 12.1-47.

12.1.4 Area Radiation Monitoring

12.1.4.1 Design Criteria

Area monitors are provided in selected building locations to continuously detect, measure, and indicate the radiation level and to initiate alarms (audible and visual) for radiation levels above preset values. In high or varied noise level areas (≥95db) strobe lights are also provided in addition to the audible alarms. These monitors advise plant personnel of existing radiation levels during normal operation and warn them of potential radiation hazards that may cause higher exposure levels than expected.

The detector ranges of these monitors are chosen to provide continuous monitoring of gamma radiation levels ranging from one decade below to three decades above the design background level at each monitor location.

The basis for location of the various personnel protection monitors shall consider the following factors:

1. The anticipated radiation level under operation, shutdown maintenance, and abnormal conditions.

2. The frequency and duration of occupancy, and the flow of traffic under normal and accident conditions.

3. The proximity of high radiation sources.

4. The consequence of an undetected increase in radiation level.

In addition to the personnel protection monitoring utilized during normal plant conditions, accident area monitoring will also be provided. Area monitoring for range 10^{-1} to 10^{4} R/hr will be provided in the following areas:

1. Inside buildings or areas which are in direct contact with primary containment where penetrations and hatches are located.

2. Inside buildings or areas where access is required to service equipment important to safety and the threat of radiation contamination exists.

Three high-range monitors of range 1 to 10^{7} R/hr will be provided to monitor the levels of gamma radiation in the Containment Area. The detectors for these monitors will be located approximately 120° apart around the Containment vessel periphery in the Annulus space so as to allow a measurement of gamma activity being radiated from containment. The location of these monitors is in the more benign environment of the Annulus rather than in containment to avoid the severe temperature transient and direct sodium aerosol which may occur during and following an acident. These monitors are safety-related and each is supplied which a separate division of Class 1E power.

The Accident Monitors as identified in Table 12.3-5, will meet the requirements of Section 7.5.11 of the PSAR

The locations of the area monitors provided for the CRBRP are shown on Figs. 12.1-1 to 12.1-19d and are listed in Table 12.3-5.

12.1.4.2 Monitoring System Description

Each area monitoring channel consists of a gamma detector, microprocessor and accessories, local indicators, alarms, and Control Room indication. The gamma detector energy dependence will be flat within ±20% for incident radiation above 100 Kev. Local monitor display includes loss-of-signal, high and high-high radiation indicator lights, high and high-high radiation audible alarms and mR/hr rate meter. Also, an essential feature of each monitoring channel will be its ability to avoid "foldover" following saturation in high radiation fields.

The detector signal is also displayed on redundant Radiation Monitoring System CRTs located in the Control Room and Health Physics Area of the Plant Service Building via their respective Central Processing Units and Mini-Computers(System Controllers). The indicating analog meter in each local monitor indicates exposure levels on a suitable multi-decade logarithmic scale. The alarm signals are also permanently recorded by the redundant Radiation Monitoring System Line-Printers located in the Control Room and Health Physics Area.

Group annunciation is also provided on the Main Control Board.

Each area monitor will contain a built-in solenoid actuated shielded check source which can be actuated from the remote process station in the vicinity. All monitor components will be modular, commercially available units designed for rapid replacement upon failure. Electronic components will be exclusively solid-state, as available; and power will be supplied from the Instrument AC (120V, 60H_z) busses for the non-safety monitors. Area monitors performing containment isolation functions (PPS) will be supplied with Class 1E power from redundant vital AC busses.

The high radiation alarms of all area monitors are transmitted from the local monitors to the Remote Data Aquisition Terminal units in the vicinity. The Plant Data Handling and Display system will display and log all high alarms.

Figure 12.1-21 shows a functional block diagram of an area radiation monitor. Locations, design dose rates and ranges of sensitivities of the monitors are provided in Table 12.3-5.

12.1.4.3 Maintenance and Calibration

On completion of the monitoring system installation, each area monitor will be checked for proper operation and calibrated against a radiation checksource traceable to the National Bureau of Standards or from an equally acceptable source. The initial calibration and subsequent calibrations at six month intervals will utilize a minimum of two source strengths to verify the linearity of detector output. In addition, each monitor is supplied with a built-in check source to provide a rapid functional test at periodic intervals.

12.1.5 Estimates of Exposure

Peak External Dose Rates and Annual Doses at Unrestricted Locations

The peak dose rates and annual doses at the site boundary and control room due to direct plant radiation are low and considered small relative to the natural background radiation. These doses have been estimated and are shown in Table 12.1-49, Parts I, II, and III.

The peak dose rates at the site boundary and visitors center from plant radiation are based on the estimated dose rate from a large fuel shipping cask located at the plant rail siding which when loaded meets the maximum dose rate allowed in 49 CFR, Part 173. The annual dose is due to normal plant operations because of the relatively short time period the peak dose rate would be maintained. The normal operating condition is based on a dose rate of 0.2 mrem/hr at the edge of buildings utilizing controlled access areas.

The dose rate in the control room from plant operations has been conservatively estimated at 2×10^{-6} mrem/hr. The real exposure of personnel, due to normal operations, in this heavily shielded space would be controlled by the quantity of naturally occurring radioactive materials; K^{40}, the natural U and Th decay chains, found in the concrete shield.

The peak dose rate and annual dose at the edge of the controlled buildings are anticipated to occur in the intermediate building at the intermediate sodium coolant penetration cells leading to the reactor containment building. The peak dose rate at the penetration will be no greater than 0.2 mrem/hr as shown in Part III of Table 12.1-49. The remaining areas bounding the controlled area will be at or near natural background levels because of the plant shielding, the structural concrete required for hardening the plant buildings, and the below grade placement of the radioactive portions of the plant.

Dose Rates and Annual Doses at Controlled Locations of the Plant

The peak dose rate and annual doses for eight reactor containment and three reactor service building locations are shown in Parts IV and V of Table 12.1-49. These selected dose points are considered representative of controlled area accessible locations. In addition to the peak operating dose rates, the shutdown dose rate is also shown at each location.

The shutdown dose rates are based on the plant having been shutdown for 8 days and the sodium coolant having been used for 30 years with 1% failed fuel as described in Section 11.1.3. The annual doses shown are for continuous (24 hours/day) occupancy of the space and do not reflect the administrative controls imposed by the plant zoning criteria shown in Table 12.1-1.

Estimated Yearly Man-Rem Exposure for the Plant

The estimate of yearly man-rem exposure is based on the following parameters:

a. The occupancy of accessible areas within the controlled areas by plant personnel will be consistent with LWR experience.

b. The preliminary estimates of the plant manning by number of individuals and likely character of their work assignments. Three general classifications of individual workers are included; plant operators including shift engineers and unit operators, other non-maintenance personnel such as health physics, chemical engineers/analysts and instrumentation personnel, and finally, maintenance personnel.

c. No individual will receive exposure greater than levels specified by 10 CFR, Part 20.101.

LWR experience indicates that plant operations and non-maintenance support personnel fractional time spent in each of the radiation zones shown in Table 12.1-1 are as follows:

	Plant Operations Personnel	Other Non-Maintenance Support Personnel
Zone I	70%	45%
Zone II	25%	50%
Zone III	5%	5%

The above information is based on data provided in Reference 1. Maintenance personnel annual exposure is controlled solely by 10 CFR, Part 20 criteria and is included in the value below. Personnel assumed is consistent with Figure 13.1-1.

An evaluation of the yearly exposure using the above parameters indicates an exposure estimate for CRBRP plant staff personnel of approximately 195 man-rem per plant year, and for utility/contract personnel of approximately 205 man-rem per plant year. The estimated total radiation exposure to personnel
49 at the CRBRP site, thus, is approximately 400 man-rem per plant year.

Because of the unique nature of this plant, no directly relevant operating experience is available. The above estimate for the radiation
59 exposure to personnel at CRBRP are consistent with LWR experience.

Estimated Exposure of Specific Operations

The estimated annual man-rem radiation dose for CRBRP due to operations, maintenance, and radwaste handling, are as follows:

Operations - The radiation exposure due to operation and surveillance activities within nuclear island cells will be less than 35 man-rem/yr.
59 for contract/utility and staff personnel.

Maintenance - The radiation exposure due to maintenance activities within nuclear island cells will be less than 162 man-rem/yr for contract/utility and staff personnel.

59

Radwaste Handling - Radiation exposure due to radwaste handling has been minimized by the use of automated liquid and solid waste systems. These systems permit personnel to operate the radwaste processes remotely from a control room area in the Radwaste Building. The radiation exposures due to operation and maintenance of radwaste handling will be less than 8 man-rem/yr.

40 59

The total manhours, man-rem dose, and approximate dose rates due to all fuel handling and transfer operations are estimated as follows:

59

Total Man Hours	32,500 hours/yr.
Total Man Rem	12 man-rem/yr.
Dose Rate Range	<0.2 mrem/hr to 200 mrem/hr

The remote viewing systems are currently in the early design phase and quantitative estimates of the radiation exposure and requisite man-hours cannot be made at this time.

59 The radiation exposure due to visual in-service inspection will be less than 50 man-rem/yr. This is based on the following information.

1. The optical and cell insertion equipment for visual inspection will be designed for service in an operating PHTS cell. The radiation protection afforded by the system will be consistent with the requirements of 10CFR20. Local dose rates will be controlled to 200 mrem/hr or less on equipment surfaces outboard of the cell shielding.

2. The in-service inspections will normally be scheduled to coincide with refueling periods to allow for decay of the Na^{24} activity. With a four day delay between the time of reactor shutdown and inspection, the dose due to the visual inspections will be 1 percent of that for inspection at operating conditions. 25

Best estimate corrosion product dose rates have been calculated for several locations adjacent to the primary heat transfer system piping. Entry to these locations would only be required for inspection supplemental to the planned activities discussed in the preceeding paragraph. The dose rates are shown for 5, 10, and 30 years of operation at 10 days after shutdown. These levels will permit controlled access to the primary equipment following plant shutdown.

BEST ESTIMATE CORROSION PRODUCT DOSE RATES

Dose Point Description	Dose Rate (mrem/hr) 5 Years	10 Years	30 Years
Adjacent to 36" Pipe Near Bend Descending to Pump	230	250	275
Adjacent to 36" Pipe Elevation of Primary Pump Inlet	155	175	190
Adjacent to 24" Pipe Crossover Leg Between Primary Pump and IHX (Maximum Expected)	290	320	350

REFERENCES TO SECTION 12.1

1. Bellefonte Preliminary Safety Analysis Report (Docket No. 50438 and 50439)

2. Deleted

59 3. Deleted

4. GEAP-13925, "Capsule B9D Irradiation and Post Irradiation Examination" dated December, 1972.

TABLE 12.1-1

PLANT RADIATION ZONE CLASSIFICATION

Zone	Area Type	Access	Design Dose Rate (mrem/hr)	Zone Dose Rate Specification (mrem/hr)	Type of Control
-	Unrestricted Area	Continuous	-	**	Uncontrolled
I	Restricted Area	Continuous Routinely Occupied	0.2	≤0.2	Administrative Control
II	Restricted Area	Continuous, Not Routinely Occupied	2.0	>0.2 to <5	Administrative Control
III	Radiation Area	Periodic Limited Access for Routine Tasks	10***	>5 to ≤100	Administrative Control
IV	High Radiation Area	Unoccupied* Limited Access for Non-routine or Infrequent Tasks	100	>100 to <5000	Special Work Permits, Locked Doors, Signs, Temporary Barricades, Health Physics Surveillance
V	Extremely High Radiation Area	Unoccupied*	Unlimited	>5000	Positive exclusion, Locked Doors, Special Work Permits, Continuous Health Physics Monitoring

* 10CFR20 criteria.
** Approaching background radiation.
*** 25 mrem/hr within HAA

TABLE 12.1-2

SHIELD PARAMETERS FOR THE HEAD ACCESS AREA

Radiation Zone	Predominant Sources of Radiation	Specific Design Considerations Applying to Sources	Type of Shielding Required	Nominal Thickness of Shield
III	Na^{24} gammas from primary inlet and outlet coolant piping	Major Source Geometries: (a) 36" Pipe (b) 24" Pipe	Concrete Walls Along Periphery of HAA, Above Support Ledge	5'
III	Na^{24} gammas from in-vessel sodium pool and primary sodium coolant piping. In-vessel neutron leakage through sodium pool; ex-vessel neutron leakage	(a) In-Vessel Sodium Pool (b) 36" Pipe (c) 24" Pipe (d) Reactor Cavity (e) cover Gas Pool	Concrete Support Ledge; Carbon Steel Reactor Vessel Support Structure	6' (serpentine concrete) 9" (steel)
III	Same as Above	Same as Above	Steel/Inconel Reactor Vessel Closure Head Assembly	53"
III	Ex-Vessel Neutron Leakage	Major Source Geometries; Reactor Cavity	B_4C Annular Neutron Shield Ring	14"
III	Radioactive cover gas gamma sources; Gamma streaming (Na^{24}); Neutron streaming	Major Source Geometries; (a) Annular Gaps (b) In-vessel sodium Pool (c) Cover Gas Volume Above Sodium Pool (d) Reactor Cavity	Penetration Shields CRDM's (15) EVTM - Nozzle port IVTM - Nozzle port Others: UIS Jacks (4) Liquid Level Ports (4) Risers (3)	Local Shadow Shields (steel) as required

TABLE 12.1-3

SHIELD PARAMETERS FOR THE CONTAINMENT BUILDING ABOVE OPERATING FLOOR

Radiation Zone	Predominant Sources of Radiation	Specific Design Considerations Applying to Sources	Type of Shielding Required	Nominal Thickness of Ordinary Concrete
I	Na^{24} Sources in Primary Heat Transfer Cells (Cell #1, 2, 3)	Major Source Geometries: (a) 36" Pipe (b) 24" Pipe (c) Primary Coolant Pump (d) Intermediate Heat Exchanger (See Primary Sodium Sources-Section 12.1.3)	Shield Wall and Access Plugs	6'3"
I	Na^{24} and Fission/ Corrosion Products in Cold Trap Cells	Major Source Geometries (a) Two NaK cooled Cold Traps (b) Two Cold Trap Economizers (See Primary Sodium and Cold Trap Sources in Section 12.1.3)	Shield Wall and Access Plugs	6'6"
I	Corrosion and Fission Product Sources in Large Component Cleaning Cell	Major Source Geometry (a) Component being cleaned in LCCC. Not a continuous process	Shield Deck	3'6"
III	Head Access Area	Major Source Geometries (a) Components (CRDM's) (b) Closure Head Penetrations	None	None

TABLE 12.1-4

SHIELD PARAMETERS FOR ACCESSIBLE AREAS OF THE CONTAINMENT BUILDING BELOW OPERATING FLOOR

Radiation Zone	Predominant Sources of Radiation	Specific Design Considerations Applying to Sources	Type of Shielding Required	Nominal Thickness of Ordinary Concrete
II	Na^{24} Sources in Primary Heat Transfer Cells	Major Source Geometries (a) 36" pipe (b) 24" pipe (c) Intermediate Heat Exchanger (See Primary Sodium Sources in 12.1.3)	Shield Wall	6'0"
II	Na^{24} and Fission/ Corrosion Products in Cold Trap Cells	Major Source Geometries (a) Two NaK cooled cold traps (b) Two cold trap economizers (See Primary Sodium and Cold Trap Sources in Section 12.1.3)	Shield Wall	6'0"
II	Na^{24} Sources in Reactor Overflow Vessel Cell	Major Source Geometries (a) Overflow tank 20,000 gallons of Primary Sodium	Shield Wall and Access Port	6'3"
III	Na^{24} Sources in Primary Heat Transfer Cells (Cells #1, 2, and 3)	Same as Above	Same as Above	5'6"
III	Na^{24} Sources in Reactor Overflow Vessel Cell	Same as Above	Same as Above	5'9"

TABLE 12.1-4 (Continued)

Radiation Zone	Predominant Sources of Radiation	Specific Design Considerations Applying to Sources	Type of Shielding Required	Nominal Thickness of Ordinary Concrete
III	Primary Sources from Reactor Cavity (Neutrons and Gammas)	Kinds of Sources Considered (a) Capture gammas from reactor vessel internals, reactor vessel, guard vessel, and reactor cavity shield. (b) Prompt fission gammas (c) Reactor vessel Na^{24} sources (d) Neutrons	Annular Shield Wall	7'0"
III	Noble Gases in RAPS, Xe^{135} Kr^{88}, etc.	Major Source Geometries (a) Vacuum and Surge Tank (b) Argon Recycle Tank (c) RAPS Compressors (d) RAPS Cold Box (e) Noble Gas Storage Vessel	Shield Wall	3'0" 4'0"

TABLE 12.1-5

SHIELD PARAMETERS FOR THE REACTOR SERVICE BUILDING

Radiation Zone	Predominant Source of Radiation	Specific Design Considerations Applying to Source	Type of Shielding	Nominal Thickness of Ordinary Concrete
I (FHC Operating Gallery)	Up to three Expended Fuel Assemblies in Fuel Handling Cells	Maximum Decay Heat Total for Cell 18 kW	Shield Wall with Viewing Windows	6 ft 0 in.
III (Same at 772 ft elevation)	Noble Gases in CAPS, Xe^{135}, Kr^{88}, etc.	CAPS Cold Box, (1) Cyrogenic Carbon beds, Two, 8 ft^3	Shield Wall and Hatch	2 ft 6 in.

TABLE 12.1-6

ACTIVATION AND FISSION PRODUCTS IN THE PRIMARY SODIUM

µCi/gm of Sodium

Years of Reactor Operation*

Isotope*	5 Days After Shutdown			10 Days After Shutdown			30 Days After Shutdown		
	0	10	60	0	10	60	0	10	60
Na^{24}	2.94×10^4	0.432	0.000	2.94×10^4	0.432	0.000	2.94×10^4	0.432	0.000
Na^{22}	2.55	2.54	2.45	3.23	3.21	3.09	3.49	3.46	3.34
Rb^{86}	2.00	1.38	.22	2.00	1.38	.22	2.00	1.38	.22
Cs^{137}	18.4	18.4	18.4	34.4	34.4	34.4	84.2	84.2	84.2
Cs^{136}	17.4	10.5	0.84	17.4	10.5	0.84	17.4	10.5	0.84
Cs^{134}	7.71	7.64	7.29	9.79	9.76	9.26	10.7	10.6	10.1
Sb^{125}	0.349	0.347	0.335	0.445	0.443	0.427	0.483	0.48	0.463
I^{131}	49.7	21.0	0.28	49.7	21.0	0.28	49.7	21.0	0.28
Te^{132}	3.53	0.416	0.00	3.53	0.416	0.00	3.53	0.416	0.00
I^{132}	33.5	3.95	0.00	33.5	3.95	0.00	33.5	3.95	0.00
Te^{129m}	0.718	0.586	0.213	0.718	0.586	0.213	0.718	0.586	0.213
Te^{129}	0.718	0.586	0.213	0.718	0.586	0.213	0.718	0.586	0.213
Sr^{89}	0.110	0.096	0.048	0.110	0.096	0.048	0.110	0.096	0.048

TABLE 12.1-6 (Continued)

Years of Reactor Operation*

Isotope*	5 Days After Shutdown			10 Days After Shutdown			30 Days After Shutdown		
	0	10	60	0	10	60	0	10	60
Sr^{90}	0.015	0.015	0.015	0.029	0.029	0.029	0.068	0.068	0.068
Y^{90}	0.015	0.015	0.015	0.029	0.029	0.029	0.068	0.068	0.068
Y^{91}	0.0313	0.0278	0.0154	0.0313	0.0278	0.0154	0.0313	0.0278	0.0154
Zr^{95}	0.0583	0.0524	0.0309	0.0583	0.0524	0.0309	0.0583	0.0524	0.0309
Nb^{95}	0.0583	0.0524	0.0309	0.0583	0.0524	0.0309	0.0583	0.0524	0.0309
Ru^{103}	0.0831	0.0698	0.0292	0.0831	0.0698	0.0292	0.0831	0.0698	0.0293
Ru^{106}	0.0575	0.0564	0.0514	0.0575	0.0564	0.0514	0.0575	0.0564	0.0514
Rh^{106}	0.0575	0.0564	0.0514	0.0575	0.0564	0.0514	0.0575	0.0564	0.0514
Sb^{127}	3.65	0.585	0.0	3.65	0.585	0.0	3.65	0.585	0.0
Te^{127m}	0.208	0.195	0.142	0.208	0.195	0.142	0.208	0.195	0.142
Te^{127}	0.248	0.195	0.142	0.248	0.195	0.142	0.248	0.195	0.142

45

TABLE 12.1-6 (Continued)

Years of Reactor Operation*

Isotope	5 Days After Shutdown			10 Days After Shutdown			30 Days After Shutdown		
	0	10	60	0	10	60	0	10	60
Ba^{140}	0.0654	0.038	0.0025	0.0654	0.038	0.0025	0.0654	0.038	0.0025
La^{140}	0.0654	0.038	0.0025	0.0654	0.038	0.0025	0.0654	0.038	0.0025
Ce^{141}	0.0775	0.0626	0.0216	0.0775	0.0626	0.0216	0.0775	0.0626	0.0216
Ce^{144}	0.0459	0.0448	0.0397	0.0459	0.0448	0.0397	0.0459	0.0448	0.0397
Pr^{144}	0.0459	0.0448	0.0397	0.0459	0.0448	0.0397	0.0459	0.0448	0.0397
Pr^{143}	0.0549	0.033	0.0026	0.0549	0.033	0.0025	0.0549	0.033	0.0026
Nd^{147}	0.0257	0.0138	0.0006	0.0257	0.0138	0.0006	0.0257	0.0138	0.0006
Pm^{147}	0.0189	0.0188	0.0181	0.024	0.0238	0.023	0.0257	0.0255	0.0246
Pu^{238}	2.92-3	2.92-3	2.292-3	5.76-3	5.76-3	5.76-3	1.60-2	1.60-2	1.60-2
Pu^{239}	7.05-4	7.05-4	7.05-4	1.42-3	1.42-3	1.42-3	4.24-3	4.24-3	4.24-3
Pu^{240}	9.18-4	9.18-4	9.18-4	1.85-3	1.85-3	1.85-3	5.54-3	5.54-3	5.54-3
Pu^{241}	0.134	0.134	0.133	0.237	0.237	0.235	0.46	0.459	0.456
Pu^{242}	1.96-6	1.96-6	1.96-6	3.94-6	3.94-6	3.94-6	1.18-5	1.18-5	1.18-5

TABLE 12.1-6 (Continued)

Years of Reactor Operation*

Isotope	5 Days After Shutdown			10 Days After Shutdown			30 Days After Shutdown		
	0	10	60	0	10	60	0	10	60
Np^{238}	4.91-6	1.80-7	0.00	4.91-6	1.80-7	0.00	4.91-6	1.80-7	0.00
Np^{239}	1.58-2	8.23-4	0.00	1.58-2	8.23-4	0.00	1.58-2	8.23-4	0.00
Am^{241}	2.96-4	2.96-4	2.96-4	5.91-4	5.91-4	5.91-4	1.64-3	1.64-3	1.64-3
Am^{242m}	1.15-5	1.15-5	1.15-5	2.26-5	2.26-5	2.26-5	6.46-5	6.46-5	6.46-5
Am^{242}	2.08-5	1.15-5	1.15-5	3.19-5	2.26-5	2.26-5	7.39-5	6.46-5	6.46-5
Am^{243}	4.40-6	4.40-6	4.40-6	8.80-6	8.80-6	8.80-6	2.64-5	2.64-5	2.64-5
Cm^{242}	1.20-3	1.16-3	9.29-4	1.20-3	1.16-3	9.29-4	1.20-3	1.16-3	9.29-4
Cm^{243}	3.42-6	3.42-6	3.40-6	6.49-6	6.49-6	6.45-6	1.59-5	1.59-5	1.58-5
Cm^{244}	8.56-5	8.56-5	8.50-5	1.56-4	1.56-4	1.55-4	3.32-4	3.32-4	3.30-4 45
49 H^{3**}	2.34	2.34	2.32	2.34	2.34	2.32	2.34	2.34	2.32

Nomenclature: 7.05-3 = 7.05×10^{-3}

*Fission and corrosion product isotopes present in quantities of less than 0.01 μCi/gm are not included on this table. To perform shield design calculations using the zero days after shutdown column multiply these sources by 1.5.

49 ** The maximum H^3 concentration in the intermediate sodium is 6.15×10^{-2} μCi/gm of Na 45

TABLE 12.1-7

DEPOSITION OF ACTIVATION, FISSION, FUEL AND CORROSION PRODUCTS IN SODIUM, ON WETTED SURFACES AND ON COLD TRAPS

Isotope	In Na	Percent Deposition	
		On Wetted Plant Surfaces	In Cold Traps
Na^{24}	100	0	0
Na^{22}	100	0	0
Rb^{86}	95	0	5
Cs^{137}	20	0	80
Cs^{136}	95	0	5
Cs^{134}	40	0	60
Sb^{125}	10	0	90
Sb^{127}	95	0	5
I^{132}	95	0	5
I^{131}	95	0	5
Remaining Fission Prod.	10	100	10 (Except Ba^{140}, La^{140}, Te^{132} ~ 5)
H^3	2	0	47% Primary, 51% Intermediate
Corrosion Products (Co, Fe, Mn, Cr, and Ta)	<1	100	10 (50 for Mn^{54})
Pu, Am, Cm	95	5	100
Np	95	5	5

TABLE 12.1-8

INVENTORY OF RADIOACTIVE PRIMARY SODIUM IN THE PPTI[+] AND PSSP[++]

Isotope	Inventory (Ci) PPTI	PSSP
Na^{24}	103	121
Na^{22}	1.2×10^{-2}	1.4×10^{-2}
Rb^{86}	7.1×10^{-3}	8.2×10^{-3}
Cs^{137}	0.29	0.36
Cs^{136}	6.1×10^{-2}	7.1×10^{-2}
Cs^{134}	3.7×10^{-2}	4.5×10^{-2}
Sb^{125}	1.7×10^{-3}	1.9×10^{-3}
I^{131}	0.17	0.20
Te^{132}	0.013	0.015
I^{132}	0.12	0.13
Te^{129m}	2.5×10^{-3}	3.0×10^{-3}
Te^{129}	2.5×10^{-3}	3.0×10^{-3}
Sr^{89}	3.8×10^{-4}	4.6×10^{-4}
Sr^{90}	2.4×10^{-4}	2.8×10^{-4}
Y^{90}	2.4×10^{-4}	2.8×10^{-4}
Y^{91}	1.1×10^{-4}	1.3×10^{-4}
Zr^{95}	2.1×10^{-4}	2.4×10^{-4}
Nb^{95}	2.1×10^{-4}	2.4×10^{-4}
Ru^{103}	2.9×10^{-4}	3.4×10^{-4}
Ru^{106}	2.1×10^{-4}	2.4×10^{-4}
Rh^{106}	2.1×10^{-4}	2.4×10^{-4}
Ba^{140}	2.3×10^{-4}	2.7×10^{-4}
La^{140}	2.3×10^{-4}	2.7×10^{-4}
Ce^{141}	2.7×10^{-4}	3.1×10^{-4}
Ce^{144}	1.6×10^{-4}	1.8×10^{-4}
Pr^{144}	1.6×10^{-4}	1.8×10^{-4}
Pr^{143}	1.9×10^{-4}	2.3×10^{-4}
Nd^{147}	9.0×10^{-5}	1.1×10^{-4}
Pm^{147}	9.0×10^{-5}	1.1×10^{-4}
Co^{60}	8.0×10^{-6}	9.5×10^{-7}
Co^{58}	1.5×10^{-5}	1.8×10^{-6}
Mn^{54}	5.9×10^{-5}	7.0×10^{-6}
Pu^{238}	5.7×10^{-5}	6.8×10^{-5}
Pu^{239}	1.5×10^{-5}	1.8×10^{-5}
Pu^{240}	2.2×10^{-5}	2.3×10^{-5}
Pu^{241}	1.7×10^{-3}	2.2×10^{-3}
Pu^{242}	4.1×10^{-8}	5.2×10^{-8}

TABLE 12.1-8 (Cont.)

INVENTORY OF RADIOACTIVE PRIMARY SODIUM
IN THE PPTI+ AND PSSP++

Isotope	Inventory (Ci) PPTI	PSSP
Np^{238}	1.7×10^{-8}	2.1×10^{-8}
Np^{239}	5.4×10^{-5}	6.8×10^{-5}
Am^{241}	5.6×10^{-6}	7.0×10^{-6}
Am^{242m}	2.2×10^{-7}	2.8×10^{-7}
Am^{242}	2.5×10^{-7}	3.2×10^{-7}
Am^{243}	9.1×10^{-8}	1.1×10^{-7}
Cm^{242}	4.1×10^{-6}	5.1×10^{-6}
Cm^{243}	5.5×10^{-8}	6.8×10^{-8}
Cm^{244}	1.1×10^{-6}	1.4×10^{-6}
H^{3}	8.2×10^{-3}	9.7×10^{-3}
Total	103.09	121.8

+ Primary Plugging Temperature Indicator
++ Primary Sodium Sample Package

TABLE 12.1-9 Significant Corrosion Fission Product and Released Fuel Activities on Primary Sodium Wetted Surfaces at Reactor Shutdown

Fission Products*

Isotope	Surface Activity μCi/cm²
Sr^{89}	7.35
Sr^{90}	4.60
Y^{90}	4.60
Y^{91}	2.12
Zr^{95}	3.94
Nb^{95}	3.94
Mo^{99}	4.82
Ru^{103}	5.61
Ru^{106}	3.88
Rh^{106}	3.88
Ag^{111}	.32
Te^{127}	14.0
Te^{127m}	14.0
Te^{129m}	48.4
Te^{129}	48.4
Te^{132}	238
Ba^{140}	4.42
La^{140}	4.42
Ce^{141}	5.23
Ce^{143}	3.7

Corrosion and Released Fuel Surface Activity μCi/cm²

Isotope	Years of Operation: 5	10	20	30
Co^{60}	0.59	0.90	1.14	1.20
Co^{58}	4.70	4.70	4.70	4.70
Mn^{54}	5.5	5.6	5.6	5.6
Fe^{59}	0.039	0.039	0.039	0.039
Cr^{51}	0.97	0.97	0.97	0.97
Ta^{182}	0.25	0.25	0.25	0.25
Released Fuel				
Pu^{238}	1.76×10^{-3}	3.44×10^{-3}	6.65×10^{-3}	9.66×10^{-3}
Pu^{239}	4.47×10^{-4}	8.93×10^{-4}	1.79×10^{-3}	2.68×10^{-3}
Pu^{240}	5.85×10^{-4}	8.93×10^{-4}	2.34×10^{-3}	3.51×10^{-3}
Pu^{241}	.105	.209	.259	.316
Pu^{242}	1.29×10^{-6}	2.57×10^{-6}	5.14×10^{-6}	7.71×10^{-6}
Np^{238}	3.18×10^{-6}	3.18×10^{-6}	3.18×10^{-6}	3.18×10^{-6}
Np^{239}	1.02×10^{-2}	1.02×10^{-2}	1.02×10^{-2}	1.02×10^{-2}
Am^{241}	1.92×10^{-4}	3.82×10^{-4}	7.06×10^{-4}	1.06×10^{-3}

Table 12.1-9 (continued)

Fission Products*		Corrosion and Released Fuel Surface Activity ($\mu Ci/Cm^2$)					
Isotope	Surface Activity $\mu Ci/Cm^2$	Isotope	Years of Operation:	5	10	20	30
Pr^{143}	3.7	Am^{242m}		7.45×10^{-6}	1.46×10^{-5}	2.79×10^{-5}	4.19×10^{-5}
Ce^{144}	3.1	Am^{242}		7.45×10^{-6}	1.46×10^{-5}	2.79×10^{-5}	4.19×10^{-5}
Pr^{144}	3.1	Am^{243}		2.85×10^{-6}	5.70×10^{-5}	1.14×10^{-5}	1.71×10^{-5}
Nd^{147}	1.74	Cm^{242}		7.78×10^{-4}	7.78×10^{-4}	7.78×10^{-4}	7.78×10^{-4}
Pm^{147}	1.74	Cm^{243}		2.21×10^{-6}	4.20×10^{-6}	8.55×10^{-6}	1.03×10^{-5}
Pm^{149}	1.14	Cm^{244}		5.54×10^{-5}	1.01×10^{-4}	1.69×10^{-4}	2.15×10^{-4}
Eu^{155}	.17						
Eu^{156}	.13						

*Fission products present in quantities of less than 0.1 $\mu ci/cm^2$ at 10 days after shutdown, not included on this table.

TABLE 12.1-10

RADIOISOTOPE INVENTORY IN PRIMARY AND INTERMEDIATE

COLD TRAPS AFTER 15 YEARS OPERATION

Activated Corrosion Products	Total Activity In Cold Traps (CI) Shutdown	10 Days After Shutdown
Co^{60}	10.0	10.0
Co^{58}	44.7	40.6
Mn^{54}	307	300
Ta^{182}	2.4	2.3
Cr^{51}	9.2	7.2
Fe^{59}	0.37	0.32
	373.7	360.4

Fission Products	Shutdown	10 Days After Shutdown
Sr^{89}	70.0	60.0
Sr^{90}	25.9	25.9
Y^{91}	20.1	17.8
Zr^{95}	37.3	33.5
Nb^{95}	37.3	33.5
Ru^{103}	53.2	44.6
Ru^{106}	38.0	37.2
Rh^{106}	38.0	37.2
Sb^{125}	2710	2680
Sb^{127}	123	20.5
Te^{127m}	133	125
Te^{127}	146	125
Te^{129m}	460	376
Te^{129}	460	376
I^{131}	1675	750

TABLE 12.1-10 (Continued)

Fission Products	Total Activity in Cold Traps (Ci) Shutdown	10 Days After Shutdown
Te^{132}	1110	132
I^{132}	1110	132
Cs^{134}	10340	10244
Cs^{136}	583	342
Cs^{137}	1.24×10^5	1.24×10^5
Ba^{140}	20.9	12.2
La^{140}	20.9	12.2
Ce^{141}	49.6	40.0
Ce^{144}	29.7	28.9
Pr^{143}	35.1	21.0
Pr^{144}	29.4	28.6
Pm^{147}	21.9	21.7
	1.43×10^5	1.40×10^5

Released Fuel	Shutdown	10 Days After Shutdown
Pu^{238}	5.85	5.85
Pu^{239}	1.46	1.46
Pu^{240}	1.88	1.88
Pu^{241}	218	218
Pu^{242}	0.004	0.004
Am^{241}	.525	.525
Am^{242m}	.021	.021
Am^{242}	.021	.021
Am^{243}	.0084	.0084
Cm^{242}	.768	.736

TABLE 12.1-10 (Continued)

Released Fuel	Total Activity in Cold Traps (Ci) Shutdown	10 Days After Shutdown
Cm^{243}	.0059	.0059
Cm^{244}	.136	.136
Np^{238}	.0002	.0000
Np^{239}	.506	.028
	229.2	228.7

Activated Sodium	Shutdown	10 Days After Shutdown
Na^{22}	3.5	3.5
Na^{24}	66543	1.0
	66546.5	4.5

Tritium	Shutdown	10 Days After Shutdown
H^3	185000	185000
Primary Cold Trap Total Activity	3.95×10^5	3.26×10^5

Total Activity in Intermediate Cold Traps* (Six Intermediate traps)

H^3	42600	42600

H^3 Release from Steam Generator System to BOP 1.6×10^{-2} Ci/day

*Intermediate Cold Trap Life 3.25 Years

TABLE 12.1-11

RADIOACTIVE ARGON COVER GAS ACTIVATION AND FISSION PRODUCTS RELEASE RATES AND RESULTING ISOTOPIC RELEASE RATE

	Argon Cover Gas	
Isotope	Release Rate Into atoms/sec	Concentration Input μCi/scc*
Xe-131m	7.16×10^{13}	0.74
-133m	4.54×10^{14}	24
-133	1.84×10^{16}	4.3×10^{2}
-135m	5.56×10^{13}	1.1×10^{2}
-135	6.82×10^{15}	1.9×10^{3}
-138	8.94×10^{13}	1.8×10^{2}
Kr-83m	6.74×10^{13}	64
-85m	2.94×10^{14}	1.5×10^{2}
-85	4.28×10^{14}	1.4×10^{-2}
-87	1.47×10^{14}	1.7×10^{2}
-88	4.00×10^{14}	2.9×10^{2}
Ar-39	6.81×10^{14}	0.783
-41	2.13×10^{12}	2.25
Ne-23	3.34×10^{16}	7.7×10^{4}
H-3	8.13×10^{8}	1.5×10^{-5}

* μCi/scc = micro curie per cubic centimeter at standard conditions.

TABLE 12.1-11a

CONCENTRATION OF ACTIVATION AND FISSION PRODUCTS PRIMARY PUMP COVER GAS

Isotope	Concentrations in Ar Cover Gas (μCi/scc*) Primary Pump
Xe^{131m}	.525
Xe^{133m}	12.9
Xe^{133}	299
Xe^{135m}	21.7
Xe^{135}	1300
Xe^{138}	37.7
Kr^{83m}	35.2
Kr^{85m}	97.1
Kr^{85}	9.46×10^{-3}
Kr^{87}	85.3
Kr^{88}	173
Ar^{39}+	0.789
Ar^{41}	1.11
Ne^{23}	134
H^{3}	1.5×10^{-4}

+ For 30 years of reactor operation
* For normal operation of RAPS

TABLE 12.1-12

RADIOISOTOPE INVENTORY IN RAPS VACUUM VESSEL
DURING REACTOR OPERATION

Isotope	RAPS Vacuum Vessel+ Ci
Xe-131m	1.22
-133m	37.9
-133	688
-135m	24
-135	2450
-138	35
Kr-83m	50
-85m	1.7×10^2
-85	.022
-87	105
-88	2.7×10^2
Ar-39	3.50
-41	1.9
Ne-23	17
H-3	6.7×10^{-5}
TOTAL	3.9×10^3

+Daughter isotopes of the rare gas activities are included in the shield calculations. Predominant daughter products are Rb^{88} and Cs^{138} which are present at the same activity levels as Kr^{88} and Xe^{138}.

TABLE 12.1-12a

RADIOISOTOPE INVENTORY IN CAPS VACUUM VESSEL DURING REACTOR OPERATION

Isotope	CAPS Vacuum Vessel* Ci
Xe^{131m}	1.6×10^{-3}
Xe^{133m}	2.3×10^{-2}
Xe^{133}	0.54
Xe^{135m}	3.6×10^{-3}
Xe^{135}	1.3
Xe^{138}	4.0×10^{-3}
Kr^{83m}	2.5×10^{-2}
Kr^{85m}	8.8×10^{-2}
Kr^{85}	9.4×10^{-3}
Kr^{87}	5.0×10^{-2}
Kr^{88}	0.14
Ar^{39}	1.1×10^{-3}
Ar^{41}	8.9×10^{-4}
Ne^{23}	8.8×10^{-6}
H^{3}	8.3×10^{-6}

*Daughter isotopes of the rare gas activities should be included in shield calculations. Predominant daughter products are Rb^{88} and Cs^{138} which are present at the same activity levels as Kr^{88} and Xe^{138}.
All inputs are for reactor operation with 1% failed fuel.

TABLE 12.1-13

RADIOISOTOPE INVENTORY IN RAPS AND CAPS COMPRESSORS DURING REACTOR OPERATION+

Isotope	RAPS Compressor Ci	CAPS Compressor Ci
Xe131m	0.060	7.8×10^{-5}
Xe133m	1.9	1.1×10^{-3}
Xe133	34	0.025
Xe135m	1.2	1.7×10^{-4}
Xe135	1.3×10^{2}	0.063
Xe138	1.8	1.9×10^{-4}
Kr83m	2.5	1.2×10^{-3}
Kr85m	8.3	4.2×10^{-3}
Kr85	1.1×10^{-3}	4.4×10^{-4}
Kr87	5.6	2.3×10^{-3}
Kr88	13	6.7×10^{-3}
Ar39+	0.17	5.0×10^{-5}
Ar41	0.092	4.2×10^{-5}
Ne23	0.83	4.2×10^{-7}
H^3	3.3×10^{-6}	4.0×10^{-7}
Total	2.0×10^{2}	0.11

*Daughter isotopes of the rare gas activities should be included in shield calculations. Predominant daughter products are Rb^{88} and Cs^{138} which are present at the same activity levels as Kr^{88} and Xe^{138}.

+For 30 years of reactor operation.
All inputs are for reactor operation with 1% failed fuel.

TABLE 12.1-14

RADIOISOTOPE INVENTORY IN RAPS SURGE TANK
DURING REACTOR OPERATION

Isotope	RAPS Surge Vessel+ Ci
XE-131m	28.1
-133m	819
-133	1.55×10^4
-135m	32
-135	3.92×10^4
-138	44
Kr-83m	3.6×10^2
-85m	2.0×10^3
-85	0.52
-87	6.0×10^2
-88	2.5×10^3
Ar-39	81
-41	13
Ne-23	0.97
H-3	1.6×10^{-3}
TOTAL	6.2×10^4

+Daughter isotopes of the rare gas activities are included in the shield calculations. Predominant daughter products are Rb^{88} and Cs^{138} which are present at the same activity levels as Kr^{88} and Xe^{138}.

TABLE 12.1-14a

RADIOISOTOPE INVENTORY IN CAPS SURGE TANK
DURING REACTOR OPERATION

Isotope	CAPS Surge Vessel Ci
Xe^{131m}	2.5×10^{-2}
Xe^{133m}	0.34
Xe^{133}	8.2
Xe^{135m}	1.5×10^{-2}
Xe^{135}	18
Xe^{138}	1.5×10^{-2}
Kr^{83m}	0.27
Kr^{85m}	1.1
Kr^{85}	0.14
Kr^{87}	0.48
Kr^{88}	1.7
Ar^{39}	1.6×10^{-2}
Ar^{41}	9.7×10^{-3}
Ne^{23}	1.9×10^{-6}
H^{3}	4.4×10^{-4}

*Daughter isotopes of the rare gas activities should be included in shield calculations. Predominant daughter products are Rb^{88} and Cs^{138} which are present at the same activity levels as Kr^{88} and Xe^{138}.

All inputs are for reactor operation with 1% failed fuel.

TABLE 12.1-15

RADIOISOTOPE INVENTORY IN RAPS COLD BOX
DURING REACTOR OPERATION

Isotope	RAPS Cold Box+ Ci
Xe-131m	1.9×10^{3}
-133m	1.06×10^{4}
-133	4.67×10^{5}
-135m	2.0
-135	8.8×10^{4}
-138	2.5
Kr-83m	1.6×10^{2}
-85m	2.1×10^{3}
-85	7.2×10^{2}
-87	1.8×10^{2}
-88	1.7×10^{3}
Ar-39	28
-41	2.5
Ne-23	3.4×10^{-4}
H-3	5.1×10^{-4}
TOTAL	5.7×10^{5}

+Daughter isotopes of the rare gas activities are included in the shield calculations. Predominant daughter products are Rb^{88} and Cs^{138} which are present at the same activity levels as Kr^{88} and Xe^{138}.

TABLE 12.1-15a

RADIOISOTOPE INVENTORY IN CAPS COLD BOX DURING REACTOR OPERATION

Isotope	CAPS Cold Box Ci
Xe^{131m}	9.8
Xe^{133m}	26
Xe^{133}	1.4×10^{3}
Xe^{135m}	5.3×10^{-3}
Xe^{135}	2.4×10^{2}
Xe^{138}	5.0×10^{-3}
Kr^{83m}	0.70
Kr^{85m}	6.9
Kr^{85}	5.2
Kr^{87}	0.84
Kr^{88}	6.7
Ar^{39}	2.3×10^{-2}
Ar^{41}	1.1×10^{-2}
Ne^{23}	2.8×10^{-8}
H^{3}	1.6×10^{-5}

*Daughter isotopes of the rare gas activities should be included in shield calculations. Predominant daughter products are Rb^{88} and Cs^{138} which are present at the same activity levels as Kr^{88} and Xe^{138}.

All inputs are for reactor operations with 1% failed fuel.

TABLE 12.1-16

RADIOISOTOPE INVENTORY IN RAPS RECYCLE ARGON VESSEL DURING REACTOR OPERATION

Isotope	Recycle Argon Vessel Ci
Xe-131m	1.12×10^{-3}
-133m	3.1×10^{-2}
-133	0.61
-135m	6.6×10^{-5}
-135	1.1
-138	8.2×10^{-5}
Kr-83m	3.9×10^{-3}
-85m	3.8×10^{-2}
-85	2.06×10^{-5}
-87	5.0×10^{-3}
-88	3.7×10^{-2}
Ar-39	49
-41	2.2
Ne-23	1.3×10^{-3}
H-3	9.5×10^{-4}
TOTAL	52

TABLE 12.1-17

RADIOISOTOPE INVENTORY IN RAPS NOBLE GAS STORAGE VESSEL

Isotope	RAPS Noble Gas Storage Vessel Activity Ci
Xe^{131m}	1.9×10^{3}
Xe^{133m}	1.06×10^{4}
Xe^{133}	4.67×10^{5}
Xe^{135m}	2.0
Xe^{135}	8.8×10^{4}
Xe^{138}	2.5
Kr^{83m}	1.6×10^{2}
Kr^{85m}	2.1×10^{3}
Kr^{85}	7.2×10^{2}
Kr^{87}	1.8×10^{2}
Kr^{88}	1.7×10^{3}
Ar^{39+}	28
Ar^{41}	2.5
Ne^{23}	3.4×10^{-4}
H^{3}	5.1×10^{-4}
Total	5.7×10^{5}

*Daughter isotopes of the rate gas activities should be included in shield calculations. Predominant daughter products in Rb^{88} and Cs^{138} which are present at the same activity levels as Kr^{88} and Xe^{138}.

+for 30 years of reactor operation.

TABLE 12.1-17a

RADIOISOTOPE INVENTORY IN RAPS RECYCLE ARGON VESSEL DURING REACTOR OPERATION WITH RAPS COLD BOX BYPASSED

Isotope	Recycle Argon Vessel + Ci
Xe^{131m}	165
Xe^{133m}	970
Xe^{133}	4.15×10^4
Xe^{135m}	0.26
Xe^{135}	9.39×10^3
Xe^{138}	0.32
Kr^{83m}	18.0
Kr^{85m}	220
Kr^{85}	5.48
Kr^{87}	21.4
Kr^{88}	183
Ar^{39}++	49.7
Ar^{41}	0.974
Ne^{23}	6.30×10^{-4}
H^3	0.017
Total	5.15×10^4

+ For 30 days of reactor operation on bypass
++ For 30 years of reactor operation

TABLE 12.1-18

TRITIUM REMOVAL UNIT RADIOISOTOPE CONCENTRATIONS

Isotope	Tritium Removal Unit (μCi/scc)*
Xe^{131m}	3.7×10^{-4}
Xe^{133m}	5.1×10^{-3}
Xe^{133}	0.12
Xe^{135m}	2.2×10^{-4}
Xe^{135}	0.27
Xe^{138}	2.3×10^{-4}
Kr^{83m}	4.0×10^{-3}
Kr^{85m}	1.7×10^{-2}
Kr^{85}	2.1×10^{-3}
Kr^{87}	7.2×10^{-3}
Kr^{88}	2.6×10^{-2}
Ar^{39}	2.4×10^{-4}
Ar^{41}	1.4×10^{-4}
Ne^{23}	2.9×10^{-8}
H^{3}	1.9×10^{-6}

*All inputs are for reactor operations with 1% failed fuel.

49 THIS PAGE INTENTIONALLY BLANK

TABLE 12.1-20

GAS TAG SAMPLER, COVER GAS MONITOR AND MASS SPECTROMETER RADIOISOTOPE INVENTORY DURING REACTOR OPERATION+

Isotope	Gas Tag Sampler* Ci	Cover Gas Monitor Ci	Mass Spectrometer Ci
Xe-131m	0.38	1.05×10^{-3}	0.13
-133m	12.1	0.034	4.0
-133	213	0.60	71
-135m	24.5	0.08	1.4×10^{-6}
-135	947	2.7	200
-138	40.7	0.125	5.7×10^{-6}
Cs-138	3.3	0.125	4.5×10^{-4}
Kr-83m	22.5	6.1×10^{-3}	0.84
-85m	58.0	0.015	19.3
-85	0.0053	1.4×10^{-6}	1.8×10^{-3}
-87	57.8	0.016	0.75
-88	106	0.028	8.0
Rb-88	20.0	0.028	8.0
Ar-39+	0.061	1.7×10^{-5}	---
-41	0.158	6.5×10^{-4}	---
Ne-23	1.8×10^{-2}	1.0×10^{-5}	---
H-3	1.49×10^{-4}	1.00×10^{-6}	5×10^{-5}
TOTAL	1504	3.78	311

*Sum of three (3) tag samples.
+For 30 years of reactor operation, and with 1% failed fuel.

TABLE 12.1-21

EVST GAMMA SOURCE TERM*

Energy Group	Average Energy (Mev)	Mev/cm^3-sec
1	2.8	4.22×10^{8}
2	2.4	9.34×10^{9}
3	2.0	5.28×10^{9}
4	1.575	1.84×10^{11}
5	1.125	3.26×10^{10}
6	0.65	4.40×10^{11}
7	0.20	6.89×10^{10}

*Assumed Conditions: Equilibrium Core in 198 contiguous positions four days after shutdown.

TABLE 12.1-22

EVST INHERENT NEUTRON SOURCE TERM

Energy Distribution	Neutron/sec-cm^3
Pu Fast Fission	2.25×10^4

*This isotopic source has the same relative composition as shown on Table 12.1-28.

TABLE 12.1-23

EVST SODIUM SPECIFIC ACTIVITY AFTER 30 YEARS OF OPERATION

Isotope	Specific Activity uCi/gm
Na^{24*}	14.7
Na^{22}	5.80×10^{-1}
Cs^{137}	7.10
Cs^{136}	4.39×10^{-1}
Cs^{134}	7.10×10^{-1}
Sb^{125}	8.04×10^{-3}
Sb^{127}	1.99×10^{-2}
I^{131}	8.90×10^{-1}
Te^{132}	1.66×10^{-3}
I^{132}	1.50×10^{-1}
Te^{127m}	1.02×10^{-3}
Te^{127}	1.02×10^{-3}
Te^{129m}	2.65×10^{-3}
Te^{129}	2.65×10^{-3}
Sr^{89}	4.31×10^{-4}
Sr^{90}	2.87×10^{-3}
Y^{90}	2.87×10^{-3}
Y^{91}	1.23×10^{-4}
Zr^{95}	2.51×10^{-4}
Nb^{95}	2.51×10^{-4}
Ru^{103}	3.10×10^{-4}
Ru^{106}	4.98×10^{-4}
Rh^{106}	4.98×10^{-4}

TABLE 12.1-23

(Continued)

Isotope	Specific Activity (μCi/gm)
Ba^{140}	1.75×10^{-4}
La^{140}	1.75×10^{-4}
Ce^{141}	3.35×10^{-4}
Ce^{144}	3.44×10^{-4}
Pr^{144}	3.44×10^{-4}
Pr^{143}	1.46×10^{-4}
Nd^{147}	6.25×10^{-5}
Pm^{147}	4.27×10^{-4}
Pu^{238}	6.9×10^{-3}
Pu^{239}	1.86×10^{-3}
Pu^{240}	2.42×10^{-3}
Pu^{241}	1.63×10^{-1}
Pu^{242}	5.18×10^{-6}
Np^{238}	6.78×10^{-9}
Np^{239}	3.41×10^{-5}
Am^{241}	6.39×10^{-4}
Am^{242m}	2.60×10^{-5}
Am^{242}	2.60×10^{-5}
Am^{243}	1.07×10^{-5}
Cm^{242}	6.71×10^{-5}
Cm^{243}	6.35×10^{-6}
Cm^{244}	1.22×10^{-4}
H^{3}	1.40×10^{-2}

49

*Peak Na-24 occurs approximately 24 hours after transfer begins.

TABLE 12.1-24

RADIOISOTOPE INVENTORY IN EVST COLD TRAPS AFTER 30 YEARS OF OPERATION

Isotope	Activity in Cold Trap Ci
Na^{24*}	49.5
Na^{22}	1.95
Cs^{137}	7230
Cs^{136}	5.9
Cs^{134}	272.4
Sb^{125}	18.5
I^{131}	12.0
Te^{132}	0.212
I^{132}	2.01
Te^{129m}	0.675
Te^{129}	0.675
Sr^{89}	0.11
Sr^{90}	0.047
Y^{90}	0.047
Y^{91}	0.031
Zr^{95}	0.064
Nb^{95}	0.064
Ru^{103}	0.079
Ru^{106}	0.127
Rh^{106}	0.114
Ba^{140}	0.022
La^{140}	0.022
Ce^{141}	0.085

TABLE 12.1-24
(Continued)

Isotope	Activity in Cold Trap Ci
Ce^{144}	0.084
Pr^{144}	0.084
Pr^{143}	0.037
Nd^{147}	0.016
Pm^{147}	0.052
Sb^{127}	0.268
Te^{127m}	0.260
Te^{127}	0.260
Np^{238}	9.1×10^{-8}
Np^{239}	4.58×10^{-4}
Am^{241}	0.172
Am^{242m}	6.99×10^{-3}
Am^{242}	6.99×10^{-3}
Am^{243}	2.86×10^{-3}
Cm^{242}	1.80×10^{-4}
Cm^{243}	1.70×10^{-3}
Cm^{244}	3.26×10^{-2}
Pu^{238}	1.83
Pu^{239}	0.50
Pu^{240}	0.651
Pu^{241}	43.7
Pu^{242}	1.4×10^{-3}
H^{3}	177

49 45

*Peak Na-24 curie content. Na-24 and Na-22 activities are based on specific activity of EVST sodium and volume of EVST cold trap.

TABLE 12.1-25

RADIOISOTOPE INVENTORY IN THE EPTI AND ESSP

Isotope	Inventory (Ci) EPTI	ESSP
Na^{24}	3.1×10^{-2}	4.5×10^{-2}
Na^{22}	1.1×10^{-3}	1.7×10^{-3}
Cs^{137}	1.4×10^{-2}	2.1×10^{-2}
Cs^{136}	8.6×10^{-4}	1.3×10^{-3}
Cs^{134}	1.4×10^{-3}	2.2×10^{-3}
Sb^{125}	1.6×10^{-5}	2.4×10^{-5}
I^{131}	1.8×10^{-3}	2.7×10^{-3}
Te^{132}	3.2×10^{-6}	4.8×10^{-6}
I^{132}	3.0×10^{-4}	4.5×10^{-4}
Te^{129m}	5.1×10^{-6}	7.8×10^{-6}
Te^{129}	5.1×10^{-6}	7.8×10^{-6}
Sr^{89}	8.5×10^{-7}	1.3×10^{-6}
Y^{89m}	8.5×10^{-7}	1.3×10^{-6}
Sr^{90}	5.7×10^{-6}	8.7×10^{-6}
Y^{90}	5.7×10^{-6}	8.7×10^{-6}
Y^{91}	2.3×10^{-7}	3.6×10^{-7}
Zr^{95}	4.9×10^{-7}	7.5×10^{-7}
Nb^{95}	4.9×10^{-7}	7.5×10^{-7}
Ru^{103}	6.1×10^{-7}	9.3×10^{-7}
Ru^{106}	9.9×10^{-7}	1.5×10^{-6}
Rh^{106}	9.9×10^{-7}	1.5×10^{-6}

TABLE 12.1-25
(Continued)

Isotope	Inventory (Ci) EPTI	Inventory (Ci) ESSP
Ba^{140}	3.4×10^{-7}	5.1×10^{-7}
La^{140}	3.4×10^{-7}	5.1×10^{-7}
Ce^{141}	6.7×10^{-7}	1.0×10^{-6}
Ce^{144}	6.7×10^{-7}	1.0×10^{-6}
Pr^{144}	6.7×10^{-7}	1.0×10^{-6}
Pr^{143}	3.0×10^{-7}	4.5×10^{-7}
Nd^{147}	1.2×10^{-7}	1.8×10^{-7}
Pm^{147}	8.5×10^{-7}	1.3×10^{-7}
Pu^{238}	1.4×10^{-5}	2.1×10^{-5}
Pu^{239}	3.7×10^{-6}	5.7×10^{-6}
Pu^{240}	4.7×10^{-6}	7.2×10^{-6}
Pu^{241}	3.2×10^{-4}	4.9×10^{-4}
Pu^{242}	1.0×10^{-8}	1.6×10^{-8}
49 H^{3}	2.7×10^{-5}	4.1×10^{-5}

TABLE 12.1-26

INHERENT NEUTRON SOURCE TERM
FOR NEW FUEL ASSEMBLIES

	Nuclide	Neutrons per Second per Assembly
49	Pu^{238}	7.74×10^6
	Pu^{239}	7.28×10^5
	Pu^{240}	2.78×10^6
	Pu^{241}	0
49	Pu^{242}	5.40×10^5
	U^{235}	0.1
	U^{238}	3.75×10^2
	Am^{241}	1.66×10^6
	TOTAL	1.3×10^7

TABLE 12.1-27

MAXIMUM GAMMA RAY SOURCE TERM

IRRADIATED FUEL ASSEMBLY

Energy Group	Mean Energy (Mev)	Mev/cm^3-sec*
1	2.8	4.39×10^{9}
2	2.4	7.02×10^{10}
3	2.0	9.39×10^{10}
4	1.575	1.08×10^{12}
5	1.125	2.26×10^{11}
6	0.65	2.54×10^{12}
7	0.20	4.31×10^{11}

*Source strength given per cm^3 of assembly at four days after shutdown. Only one assembly with this source strength may be present in the FHC at one time.

TABLE 12.1-28

INHERENT NEUTRON SOURCE TERM

THREE EXPENDED FUEL ASSEMBLIES

Nuclide	Neutron per Second*
Pu^{238}	3.6×10^7
Pu^{239}	2.6×10^6
Pu^{240}	1.4×10^7
Pu^{241}	0
Pu^{242}	2.7×10^6
U^{235}	0.3
U^{238}	1.6×10^3
Cm^{242}	2.1×10^9
Cm^{243}	5.1×10^5
Cm^{244}	3.0×10^7
Am^{241}	6.9×10^6
Am^{243}	3.6×10^4
Total	2.2×10^9

*Values include a 1.5 design contingency factor to account for uncertainties in transuranium element inventory.

TABLE 12.1-29

FUEL HANDLING CELL ARGON

CIRCULATION SYSTEM SOURCE TERMS

FHC FILTER ACTIVITY

Nuclide	Curies
Cs^{134}	14.0
Cs^{136}	0.7
Cs^{137}	71.7
I^{131}	0.2

FHC AND FHC FILTER CELL EQUIPMENT

NOBLE GAS SPECIFIC ACTIVITY

Nuclide	Activity (μCi/cc)
Kr^{85}	1.7×10^{-2}
Xe^{131m}	8.7×10^{-4}
Xe^{133}	2.5×10^{-4}

FHC ARGON BLOWER CELL

PARTICULATE ACTIVITY

Nuclide	Curies
Cs^{134}	1.4×10^{0}
Cs^{136}	6.7×10^{-2}
Cs^{137}	3.6×10^{1}
I^{131}	1.7×10^{-2}

49

TABLE 12.1-30

CONTROL ROOM SHIELD DESIGN SOURCE TERM

MeV/cm^3-sec

Energy Group	Mean Energy	0	2.8 hr	12 hr	1 d	4 d	10 d	20 d
1	2.8	1.42E+07	7.95E+04	9.51E+03	6.20E+03	2.09E+03	6.81E+02	3.54E+02
2	2.4	2.00E+07	2.54E+06	3.19E+05	1.07E+05	5.58E+04	2.16E+04	7.10E+03
3	2.0	2.65E+07	2.33E+06	8.23E+05	5.59E+05	2.55E+05	7.56E+04	1.29E+04
4	1.575	3.77E+07	5.85E+06	2.59E+06	1.51E+06	6.88E+05	2.86E+05	1.05E+05
5	1.125	2.97E+07	8.93E+06	4.35E+06	2.63E+06	1.02E+06	2.89E+05	4.37E+04
6	.65	4.93E+07	2.34E+07	1.55E+07	1.30E+07	5.83E+06	1.88E+06	5.10E+05
7	.2	1.60E+07	7.40E+06	5.62E+06	3.94E+06	1.75E+06	9.73E+05	3.87E+05

TABLE 12.1-31

ISOTOPIC INVENTORY RELEASED TO ENVIRONMENT
RELEASE INCLUDES LEAKAGE AND ANNULUS FILTER RELEASE

ISOTOPE			ACTIVITY RELEASED (CURIES) 2 HOURS	8 HOURS	1 DAY	4 DAYS	30 DAYS
ZN	72	0	2.810E-05	9.841E-05	2.173E-04	3.504E-04	3.630E-04
GA	72	0	2.875E-05	1.042E-04	2.448E-04	4.220E-04	4.399E-04
ZN	73	0	6.201E-07	6.201E-07	6.201E-07	6.201E-07	6.201E-07
GA	73	0	3.352E-05	8.586E-05	1.104E-04	1.123E-04	1.123E-04
GE	75	0	8.001E-05	1.196E-04	1.196E-04	1.196E-04	1.196E-04
GE *	77	0	2.023E-06	2.023E-06	2.025E-06	2.025E-06	2.025E-06
AS	77	0	3.147E-04	1.093E-03	2.364E-03	3.654E-03	3.747E-03
GE *	77	0	5.705E-07	5.705E-07	5.710E-07	5.710E-07	5.710E-07
GE	77	0	2.228E-04	6.877E-04	1.169E-03	1.331E-03	1.331E-03
AS	77	0	2.720E-04	9.791E-04	2.249E-03	3.674E-03	3.781E-03
GE	78	0	7.276E-04	1.334E-03	1.366E-03	1.366E-03	1.366E-03
AS	78	0	9.509E-04	2.182E-03	2.334E-03	2.335E-03	2.335E-03
AS	79	0	2.047E-04	2.048E-04	2.048E-04	2.048E-04	2.048E-04
SE *	79	0	2.991E-04	2.996E-04	2.992E-04	2.992E-04	2.992E-04
SE	79	0	3.171E-08	1.158E-07	2.831E-07	5.923E-07	7.301E-07
AS	81	0	5.152E-04	5.153E-04	5.153E-04	5.153E-04	5.153E-04
SE *	81	0	5.664E-04	5.788E-04	5.788E-04	5.788E-04	5.788E-04
SE	81	0	2.558E-03	3.265E-03	3.265E-03	3.265E-03	3.265E-03
SE *	81	0	2.218E-03	3.245E-03	3.245E-03	3.245E-03	3.245E-03
BR	82	1	6.118E-03	2.116E-02	4.535E-02	6.889E-02	7.040E-02
SE *	83	0	8.173E-05	8.173E-05	8.173E-05	8.173E-05	8.173E-05
BR	83	1	4.055E-01	7.906E-01	8.289E-01	8.292E-01	8.292E-01
KR *	83	2	1.010E+02	2.088E+02	2.227E+02	2.229E+02	2.229E+02
SE *	83	0	9.081E-06	9.081E-06	9.081E-06	9.081E-06	9.081E-06
SE	83	0	2.318E-03	2.400E-03	2.400E-03	2.400E-03	2.400E-03
BR	83	1	3.470E-01	6.774E-01	7.103E-01	7.106E-01	7.106E-01
KR *	83	2	8.605E+01	1.781E+02	1.900E+02	1.901E+02	1.901E+02
SE	84	0	9.215E-04	9.215E-04	9.215E-04	9.215E-04	9.215E-04
BR	84	1	5.236E-01	5.625E-01	5.625E-01	5.625E-01	5.625E-01
BR *	84	1	6.022E-03	6.022E-03	6.022E-03	6.022E-03	6.022E-03
SE	85	0	3.337E-05	3.337E-05	3.355E-05	3.355E-05	3.355E-05
BR	85	1	4.062E-02	4.062E-02	4.062E-02	4.062E-02	4.062E-02
KR *	85	2	2.840E+02	7.541E+02	9.953E+02	1.016E+03	1.016E+03
SE	85	0	9.969E-06	9.969E-06	1.002E-05	1.002E-05	1.002E-05
BR	85	1	1.213E-02	1.213E-02	1.213E-02	1.213E-02	1.213E-02
KR *	85	2	8.483E+01	2.252E+02	2.973E+02	3.034E+02	3.034E+02
KR	85	2	8.966E+00	3.593E+01	1.072E+02	4.299E+02	3.148E+03
RB	86	0	9.356E-04	3.402E-03	8.229E-03	1.668E-02	1.975E-02
SE	87	0	4.420E-06	4.420E-06	4.678E-06	4.678E-06	4.678E-06
BR	87	1	1.155E-02	1.155E-02	1.155E-02	1.155E-02	1.155E-02
KR	87	2	4.271E+02	6.438E+02	6.438E+02	6.438E+02	6.438E+02
RB	87	0	1.425E-12	5.225E-12	1.280E-11	1.398E-11	1.398E-11
BR	88	1	7.168E-04	7.168E-04	7.568E-04	7.568E-04	7.568E-04

TABLE 12.1-31 (Continued)

ISOTOPE			2 HOURS	8 HOURS	1 DAY	4 DAYS	30 DAYS
				ACTIVITY RELEASED(CURIES)			
KR	88	2	7.778E+02	1.720E+03	1.922E+03	1.926E+03	1.926E+03
RB	88	0	5.270E+00	1.387E+01	1.578E+01	1.582E+01	1.582E+01
BR	89	1	5.238E-07	5.238E-07	7.527E-07	7.527E-07	7.527E-07
KR	89	2	3.420E+01	3.420E+01	3.420E+01	3.420E+01	3.420E+01
RB	89	0	3.516E-01	3.535E-01	3.535E-01	3.535E-01	3.535E-01
SR	89	0	1.042E-01	3.801E-01	9.257E-01	1.913E+00	2.319E+00
BR	90	1	2.182E-13	2.182E-13	3.273E-13	3.273E-13	3.273E-13
KR	90	2	2.299E+00	2.299E+00	2.320E+00	2.320E+00	2.320E+00
RB	90	0	4.664E-02	4.664E-02	4.664E-02	4.664E-02	4.664E-02
SR	90	0	4.604E-03	1.681E-02	4.110E-02	8.599E-02	1.060E-01
Y	90	0	4.816E-03	1.756E-02	4.280E-02	8.891E-02	1.091E-01
KR	91	2	2.623E-02	2.623E-02	3.044E-02	3.044E-02	3.044E-02
RB *	91	0	4.132E-03	4.132E-03	4.132E-03	4.132E-03	4.132E-03
SR	91	0	8.047E-02	2.427E-01	3.939E-01	4.351E-01	4.352E-01
Y *	91	0	8.202E-02	2.584E-01	4.245E-01	4.696E-01	4.697E-01
Y	91	0	8.303E-02	3.031E-01	7.400E-01	1.535E+00	1.865E+00
KR	91	2	1.749E-02	1.749E-02	2.029E-02	2.029E-02	2.029E-02
RB *	91	0	2.755E-03	2.755E-03	2.755E-03	2.755E-03	2.755E-03
SR	91	0	5.365E-02	1.618E-01	2.626E-01	2.901E-01	2.901E-01
Y	91	0	5.535E-02	2.021E-01	4.932E-01	1.023E+00	1.242E+00
KR	92	2	3.963E-06	3.963E-06	5.903E-06	5.903E-06	5.903E-06
RB	92	0	3.385E-06	3.385E-06	4.691E-06	4.691E-06	4.691E-06
SR	92	0	1.311E-01	2.691E-01	2.894E-01	2.897E-01	2.897E-01
Y	92	0	1.643E-01	4.782E-01	6.259E-01	6.320E-01	6.320E-01
KR	93	2	4.848E-09	4.848E-09	7.269E-09	7.269E-09	7.269E-09
RB	93	0	1.392E-06	1.392E-06	1.903E-06	1.903E-06	1.903E-06
SR	93	0	1.863E-02	1.863E-02	1.863E-02	1.863E-02	1.863E-02
Y	93	0	1.966E-01	5.996E-01	9.916E-01	1.108E+00	1.108E+00
ZR	93	0	2.317E-07	8.463E-07	2.070E-06	4.332E-06	5.340E-06
KR	94	2	5.361E-13	5.361E-13	8.041E-13	8.041E-13	8.041E-13
RB	94	0	1.072E-09	1.072E-09	1.598E-09	1.598E-09	1.598E-09
SR	94	0	2.043E-03	2.043E-03	2.043E-03	2.043E-03	2.043E-03
Y	94	0	5.616E-02	5.702E-02	5.702E-02	5.702E-02	5.702E-02
KR	95	2	0.	0.	0.	0.	0.
SR	95	0	5.907E-04	5.907E-04	5.936E-04	5.936E-04	5.936E-04
Y	95	0	3.044E-02	3.045E-02	3.045E-02	3.045E-02	3.045E-02
ZR	95	0	2.455E-01	8.954E-01	2.182E+00	4.523E+00	5.501E+00
NB	95	0	2.356E-01	8.604E-01	2.104E+00	4.405E+00	5.426E+00
NB	96	0	9.092E-04	3.057E-03	6.150E-03	8.392E-03	8.454E-03
SR	97	0	0.	0.	0.	0.	0.
Y	97	0	0.	0.	0.	0.	0.
ZR	97	0	2.663E-01	8.692E-01	1.640E+00	2.059E+00	2.054E+00
NB *	97	0	2.663E-01	8.698E-01	1.642E+00	2.061E+00	2.066E+00

TABLE 12.1-31 (Continued)

ISOTOPE				ACTIVITY RELEASED(CURIES)				
			2 HOURS	8 HOURS	1 DAY	4 DAYS	30 DAYS
NB	97	0	2.752E-01	9.202E-01	1.752E+00	2.204E+00	2.209E+00
NB *	98	0	1.440E-01	1.774E-01	1.774E-01	1.774E-01	1.774E-01
ZR	99	0	5.106E-04	5.106E-04	5.152E-04	5.152E-04	5.152E-04
NB	99	0	7.125E-03	7.125E-03	7.125E-03	7.125E-03	7.125E-03
MO	99	0	2.723E-01	9.655E-01	2.195E+00	3.776E+00	3.996E+00
TC *	99	0	2.728E-01	9.893E-01	2.313E+00	4.047E+00	4.290E+00
TC	99	0	1.078E-10	1.513E-09	1.036E-08	5.533E-08	9.551E-08
ZR	99	0	7.630E-05	7.630E-05	7.698E-05	7.698E-05	7.698E-05
NB	99	0	1.065E-03	1.065E-03	1.065E-03	1.065E-03	1.065E-03
MO	99	0	4.070E-02	1.443E-01	3.279E-01	5.642E-01	5.972E-01
NB	100	0	4.933E-03	4.933E-03	4.933E-03	4.933E-03	4.933E-03
NB	101	0	1.927E-03	1.927E-03	1.927E-03	1.927E-03	1.927E-03
MO	101	0	6.354E-02	6.375E-02	6.375E-02	6.375E-02	6.375E-02
TC	101	0	1.219E-01	1.233E-01	1.233E-01	1.233E-01	1.233E-01
MO	102	0	4.732E-02	4.736E-02	4.736E-02	4.736E-02	4.736E-02
TC	102	0	6.497E-02	6.502E-02	6.502E-02	6.502E-02	6.502E-02
TC	103	0	3.177E-03	3.177E-03	3.177E-03	3.177E-03	3.177E-03
RU	103	0	3.563E-01	1.298E+00	3.157E+00	6.503E+00	7.848E+00
RH *	103	0	3.564E-01	1.299E+00	3.160E+00	6.509E+00	7.855E+00
MO	104	0	7.359E-03	7.359E-03	7.359E-03	7.359E-03	7.359E-03
TC	104	0	7.968E-02	8.046E-02	8.046E-02	8.046E-02	8.046E-02
MO	105	0	3.495E-03	3.495E-03	3.495E-03	3.495E-03	3.495E-03
TC	105	0	3.103E-02	3.103E-02	3.103E-02	3.103E-02	3.103E-02
RU	105	0	2.316E-01	5.749E-01	7.129E-01	7.209E-01	7.209E-01
RH *	105	0	2.315E-01	5.756E-01	7.140E-01	7.220E-01	7.220E-01
RH	105	0	2.560E-01	8.856E-01	1.899E+00	2.887E+00	2.951E+00
RU	106	0	1.327E-01	4.843E-01	1.183E+00	2.472E+00	3.039E+00
RH	106	0	1.327E-01	4.843E-01	1.183E+00	2.472E+00	3.039E+00
TC	107	0	7.337E-04	7.337E-04	7.337E-04	7.337E-04	7.337E-04
RU	107	0	8.867E-03	8.867E-03	8.867E-03	8.867E-03	8.867E-03
RH *	107	0	9.621E-03	9.621E-03	9.621E-03	9.621E-03	9.621E-03
RH	107	0	3.911E-02	3.998E-02	3.998E-02	3.998E-02	3.998E-02
PD	107	0	2.278E-08	8.319E-08	2.034E-07	4.256E-07	5.246E-07
RH	109	0	9.740E-05	9.740E-05	9.925E-05	9.925E-05	9.925E-05
PD	109	0	7.466E-02	2.368E-01	4.217E-01	4.990E-01	4.994E-01
AG *	109	0	7.472E-02	2.369E-01	4.221E-01	4.994E-01	4.998E-01
PD	111	0	4.687E-03	4.811E-03	4.811E-03	4.811E-03	4.811E-03
AG *	111	0	4.942E-03	5.072E-03	5.072E-03	5.072E-03	5.072E-03
AG	111	0	1.764E-02	6.376E-02	1.517E-01	2.935E-01	3.324E-01
PD	112	0	8.918E-03	2.971E-02	5.859E-02	7.771E-02	7.812E-02
AG	112	0	9.196E-03	3.213E-02	6.535E-02	8.839E-02	8.887E-02
PD	113	0	7.004E-05	7.004E-05	7.004E-05	7.004E-05	7.004E-05
AG	113	0	4.909E-03	1.287E-02	1.701E-02	1.739E-02	1.739E-02

TABLE 12.1-31 (Continued)

ISOTOPE			2 HOURS	ACTIVITY RELEASED(CURIES) 8 HOURS	1 DAY	4 DAYS	30 DAYS
PD	114	0	1.036E-04	1.036E-04	1.036E-04	1.036E-04	1.036E-04
AG	114	0	1.072E-04	1.072E-04	1.072E-04	1.072E-04	1.072E-04
AG	115	0	6.679E-04	6.803E-04	6.803E-04	6.803E-04	6.803E-04
CD	115	0	3.338E-03	1.176E-02	2.626E-02	4.338E-02	4.525E-02
IN *	115	0	3.430E-03	1.230E-02	2.800E-02	4.670E-02	4.874E-02
AG *	115	0	8.110E-07	8.110E-07	8.385E-07	8.385E-07	8.385E-07
CD	115	0	3.290E-04	1.158E-03	2.585E-03	4.269E-03	4.453E-03
IN *	115	0	2.690E-04	1.040E-03	2.543E-03	4.380E-03	4.581E-03
CD *	117	0	3.523E-04	7.582E-04	8.347E-04	8.362E-04	8.362E-04
CD	117	0	1.509E-03	2.288E-03	2.355E-03	2.357E-03	2.357E-03
IN	117	0	1.803E-03	4.170E-03	4.557E-03	4.563E-03	4.563E-03
CD	118	0	1.021E-03	1.085E-03	1.085E-03	1.085E-03	1.085E-03
IN	118	0	1.175E-03	1.250E-03	1.250E-03	1.250E-03	1.250E-03
CD	119	0	1.755E-04	1.755E-04	1.755E-04	1.755E-04	1.755E-04
IN *	119	0	4.894E-04	4.955E-04	4.955E-04	4.955E-04	4.955E-04
SN	121	0	3.137E-03	1.068E-02	2.206E-02	3.139E-02	3.175E-02
SN *	123	0	1.383E-03	5.048E-03	1.232E-02	2.567E-02	3.143E-02
SN	123	0	1.031E-03	1.168E-03	1.168E-03	1.168E-03	1.168E-03
SN	125	0	1.845E-03	6.678E-03	1.598E-02	3.140E-02	3.603E-02
SB	125	0	8.061E-04	2.944E-03	7.200E-03	1.508E-02	1.860E-02
TE *	125	0	5.341E-04	1.952E-03	4.780E-03	1.006E-02	1.249E-02
SN	125	0	3.280E-03	1.187E-02	2.841E-02	5.582E-02	6.406E-02
SB	125	0	1.881E-03	6.868E-03	1.680E-02	3.516E-02	4.335E-02
SN	126	0	6.431E-09	7.816E-09	7.816E-09	7.816E-09	7.816E-09
SB *	126	0	9.330E-05	9.445E-05	9.445E-05	9.445E-05	9.445E-05
SB	126	0	4.661E-04	1.691E-03	4.066E-03	8.103E-03	9.423E-03
SN	127	0	2.291E-03	4.007E-03	4.042E-03	4.042E-03	4.042E-03
SB	127	0	5.764E-03	2.069E-02	4.804E-02	8.668E-02	9.374E-02
TE *	127	0	3.660E-03	1.337E-02	3.272E-02	6.856E-02	8.426E-02
TE	127	0	6.069E-03	2.058E-02	4.424E-02	8.117E-02	9.688E-02
SN	127	0	8.123E-03	1.421E-02	1.433E-02	1.433E-02	1.433E-02
SB	127	0	1.963E-02	7.046E-02	1.636E-01	2.953E-01	3.194E-01
TE	127	0	1.882E-02	6.909E-02	1.670E-01	3.121E-01	3.389E-01
SN	128	0	3.098E-02	1.093E-01	2.455E-01	4.111E-01	4.308E-01
SB *	128	0	3.514E-02	1.252E-01	2.862E-01	4.867E-01	5.107E-01
SB	129	0	2.168E-02	5.445E-02	6.852E-02	6.943E-02	6.943E-02
TE *	129	0	1.797E-02	6.560E-02	1.598E-01	3.292E-01	3.968E-01
TE	129	0	2.448E-02	7.478E-02	1.688E-01	3.385E-01	4.061E-01
I	129	1	1.037E-07	3.786E-07	9.255E-07	1.936E-06	2.385E-06
SB	129	0	3.854E-02	9.679E-02	1.218E-01	1.234E-01	1.234E-01
TE	129	0	3.817E-02	1.113E-01	1.456E-01	1.478E-01	1.478E-01
I	129	1	1.320E-07	4.818E-07	1.178E-06	2.464E-06	3.036E-06
SN	130	0	1.755E-03	1.755E-03	1.755E-03	1.755E-03	1.755E-03

TABLE 12.1-31 (Continued)

ISOTOPE			2 HOURS	ACTIVITY RELEASED(CURIES) 8 HOURS	1 DAY	4 DAYS	30 DAYS
SB	130	0	4.505E-03	4.505E-03	4.505E-03	4.505E-03	4.505E-03
SB	131	0	3.786E-02	3.886E-02	3.886E-02	3.886E-02	3.886E-02
TE	131	0	8.388E-02	9.026E-02	9.026E-02	9.026E-02	9.026E-02
I	131	1	8.806E+00	3.183E+01	7.533E+01	1.473E+02	1.673E+02
SB	131	0	8.681E-03	6.857E-03	6.857E-03	6.857E-03	6.857E-03
TE *	131	0	2.973E-02	1.020E-01	2.135E-01	3.106E-01	3.152E-01
I	131	1	1.677E+00	6.064E+00	1.446E+01	2.812E+01	3.196E+01
SN	132	0	6.793E-04	6.793E-04	6.793E-04	6.793E-04	6.793E-04
SB	132	0	2.638E-03	2.638E-03	2.638E-03	2.638E-03	2.638E-03
TE	132	0	2.686E-01	9.560E-01	2.194E+00	3.863E+00	4.130E+00
I	132	1	1.087E+01	2.172E+01	2.514E+01	2.870E+01	2.927E+01
SB	133	0	2.946E-03	2.946E-03	2.946E-03	2.946E-03	2.946E-03
TE	133	0	1.109E-01	1.368E-01	1.368E-01	1.368E-01	1.368E-01
I	133	1	1.240E+01	4.129E+01	8.127E+-1	1.075E+02	1.080E+02
XE	133	2	3.204E+03	1.287E+04	3.685E+04	1.213E+05	2.845E+05
SB	133	0	1.146E-03	1.146E-03	1.146E-03	1.146E-03	1.146E-03
TE *	133	0	3.411E-03	3.411E-03	3.411E-03	3.411E-03	3.411E-03
I	133	1	5.060E+00	1.684E+01	3.315E+01	4.385E+01	4.406E+01
XE	133	2	1.309E+03	5.175E+-3	1.485E+04	4.957E+04	1.162E+05
SB	134	0	8.115E-05	8.115E-05	8.130E-05	8.130E-05	8.130E-05
TE	134	0	1.2103-01	1.400E-01	1.400E-01	1.400E-01	1.400E-01
I	134	1	9.753E+00	1.215E+01	1.215E+01	1.215E+01	1.215E+01
TE	135	0	9.665E-05	9.665E-05	9.777E-05	9.777E-05	9.777E-05
I	135	1	4.782E+00	1.334E+01	1.915E+01	2.000E+01	2.000E+01
XE *	135	2	4.0423+02	9.297E+02	1.281E+03	1.333E+03	1.333E+03
XE	135	2	1.398E+03	4.703E+03	8.889E+03	1.074E+04	1.075E+04
CS	135	0	5.229E-08	1.954E-07	4.991E-07	1.100E-06	1.373E-06
TE	135	0	2.255E-04	2.255E-04	2.281E-04	2.281E-04	2.281E-04
I	135	1	1.116E+01	3.114E+01	4.468E+01	4.667E+01	4.667E+01
XE	135	2	3.229E+03	1.083E+04	2.043E+04	2.467E+04	2.469E+04
CS	135	0	1.220E-07	4.558E-07	1.163E-06	2.562E-06	3.197E-06
I	136	1	9.699E-02	9.699E-02	9.099E-02	9.099E-02	9.099E-02
I	137	1	9.021E-03	9.021E-03	9.203E-03	9.203E-03	9.203E-03
XE	137	2	1.604E+02	1.604E+02	1.604E+02	1.604E+02	1.604E+02
CS	137	0	1.154E-02	4.214E-02	1.030E-01	2.156E-01	2.657E-01
BA *	137	0	1.153E-02	4.2123-02	1.030E-01	2.155E-01	2.6573-01
I	138	1	2.2983-05	2.2983-05	3.0483-00	5.308E+00	5.308E+00
I	139	1	5.392E-11	5.3923-11	8.085E-11	8.085E-11	8.085E-11
XE	139	2	9.884E+00	9.884E+00	9.932E+00	9.932E+00	9.932E+00
CS	139	0	2.146E-01	2.146E-01	2.146E-01	2.146E-01	2.146E-01
BA	139	0	3.235E-01	5.004E-01	5.004E-01	5.004E-01	5.004E-01

TABLE 12.1-31 (Continued)

ISOTOPE			ACTIVITY RELEASED(CURIES) 2 HOURS	8 HOURS	1 DAY	4 DAYS	30 DAYS
XE	140	2	6.067E-01	6.067E-01	6.422E-01	6.422E-01	6.422E-01
CS	140	0	2.773E-02	2.773E-02	2.773E-02	2.773E-02	2.773E-02
BA	140	0	2.835E-01	1.029E+00	2.475E+00	4.937E+00	5.748E+00
LA	140	0	2.858E-01	1.043E+00	2.542E+00	5.205E+00	6.124E+00
XE	141	2	1.039E-09	1.039E-09	1.558E-09	1.558E-09	1.558E-09
CS	141	0	7.149E-04	7.149E-04	7.285E-04	7.285E-04	7.285E-04
BA	141	0	6.438E-02	6.500E-02	6.500E-02	6.500E-02	6.500E-02
LA	141	0	2.598E-01	6.186E-01	7.323E-01	7.367E-01	7.367E-01
CE	141	0	2.906E-01	1.060E+00	2.579E+00	5.300E+00	6.371E+00
XE	142	2	2.442E-11	2.442E-11	3.663E-11	3.663E-11	3.663E-11
CS	142	0	1.034E-05	1.034E-05	1.277E-05	1.277E-05	1.277E-05
BA	142	0	2.977E-02	2.978E-02	2.978E-02	2.978E-02	2.978E-02
LA	142	0	1.779E-01	2.665E-01	2.665E-01	2.665E-01	2.665E-01
CS	143	0	0.	0.	0.	0.	0.
BA	143	0	3.942E-05	3.942E-05	4.311E-05	4.311E-05	4.311E-05
LA	143	0	5.045E-02	5.094E-02	5.094E-02	5.094E-02	5.094E-02
CE	143	0	2.327E-01	8.023E-01	1.702E+00	2.535E+00	2.581E+00
PR	143	0	2.357E-01	8.603E-01	2.098E+00	4.295E+00	5.058E+00
CS	144	0	0.	0.	0.	0.	0.
BA	144	0	0.	0.	0.	0.	0.
LA	144	0	0.	0.	0.	0.	0.
CE	144	0	1.366E-01	4.987E-01	1.218E+00	2.544E+00	3.125E+00
PR	144	0	1.367E-01	4.988E-01	1.219E+00	2.544E+00	3.125E+00
CE	145	0	5.212E-03	5.212E-03	5.212E-03	5.212E-03	5.212E-03
PR	145	0	1.527E-01	4.145E-01	5.722E-01	5.909E-01	5.909E-01
CE	146	0	2.302E-02	2.308E-02	2.308E-02	2.308E-02	2.308E-02
PR	146	0	6.158E-02	6.451E-02	6.451E-02	6.451E-02	6.451E-02
ND	147	0	1.151E-01	4.173E-01	1.001E+00	1.984E+00	2.294E+00
PM	147	0	3.404E-02	1.243E-01	3.041E-01	6.372E-01	7.864E-01
SM	147	0	0.	0.	0.	0.	0.
ND	149	0	5.425E-02	9.722E-02	9.877E-02	9.877E-02	9.877E-02
PM	149	0	7.502E-02	2.677E-01	6.023E-01	9.977E-01	1.041E+00
ND	151	0	6.928E-03	6.940E-03	6.940E-03	6.940E-03	6.940E-03
PM	151	0	4.442E-02	1.516E-01	3.149E-01	4.518E-01	4.575E-01
SM	151	0	4.636E-04	1.693E-03	4.142E-03	8.674E-03	1.070E-02
SM	153	0	2.314E-02	3.104E-02	1.789E-01	2.886E-01	2.989E-01
SM	155	0	3.133E-03	3.230E-03	3.230E-03	3.230E-03	3.230E-03
EU	155	0	1.921E-03	7.013E-03	1.714E-02	3.586E-02	4.417E-02
SM	156	0	6.421E-03	1.910E-02	3.028E-02	3.300E-02	3.300E-02
EU	156	0	9.071E-03	3.305E-02	8.012E-02	1.818E-01	1.900E-01
EU	157	0	4.832E-03	1.575E-02	2.906E-02	3.557E-02	3.562E-02
EU	158	0	1.717E-03	2.237E-03	2.237E-03	2.237E-03	2.237E-03
GD	159	0	1.927E-03	6.329E-03	1.210E-02	1.541E-02	1.545E-02

TABLE 12.1-31 (Continued)

ISOTOPE	2 HOURS	ACTIVITY RELEASED(CURIES) 8 HOURS	1 DAY	4 DAYS	30 DAYS
NP 238 3	2.712E-03	9.526E-03	2.117E-02	3.463E-02	3.601E-02
PU 238 3	2.231E-03	8.147E-03	1.992E-02	4.168E-02	5.137E-02
NP 239 3	6.350E+00	2.239E+01	5.026E+01	8.400E+01	8.796E+01
PU 239 3	6.251E-04	2.283E-03	5.582E-03	1.169E-02	1.441E-02
PU 240 3	5.998E-04	2.190E-03	5.354E-03	1.120E-02	1.381E-02
PU 241 3	7.594E-02	2.773E-01	6.779E-01	1.418E+00	1.748E+00
AM 241 3	9.546E-04	3.436E-03	8.523E-03	1.784E-02	2.200E-02
PU 242 3	1.460E-06	5.331E-06	1.303E-05	2.727E-05	3.362E-05
CS 134 0	4.476E-03	1.634E-02	3.994E-02	8.350E-02	1.028E-01
CS 136 0	1.795E-02	6.516E-02	1.569E-01	3.140E-01	3.667E-01
XE * 131 2	1.835E+01	7.296E+01	2.133E+02	7.826E+02	3.004E+03
XE * 133 2	1.387E+02	5.349E+02	1.439E+03	3.814E+03	5.296E+03
XE 133 2	7.680E-01	1.174E+01	9.766E+01	1.030E+03	5.099E+03
U 235 3	6.808E-10	2.486E-09	6.078E-09	1.272E-08	1.565E-08
U 238 3	6.338E-08	2.314E-07	5.658E-07	1.184E-06	1.459E-06
NP 237 3	1.647E-03	6.013E-08	1.470E-07	3.076E-07	3.792E-07
AM 242 3	1.121E-01	3.633E-01	6.763E-01	8.358E-01	8.373E-01
CM 242 3	7.989E-02	2.918E-01	7.133E-01	1.489E+00	1.826E+00
AM * 242 3	5.967E-05	2.179E-04	5.326E-04	1.115E-03	1.374E-03
CM 242 3	1.058E-08	1.488E-07	1.046E-06	6.469E-06	1.538E-05
AM 243 3	3.359E-06	1.226E-05	2.998E-05	6.274E-05	7.733E-05
AM 244 3	1.931E-03	5.855E-03	9.594E-03	1.066E-02	1.066E-02
CM 244 3	5.781E-05	2.112E-04	5.166E-04	1.081E-03	1.333E-03
CM 243 3	4.157E-05	1.518E-04	3.711E-04	7.765E-04	9.571E-04
PU 244 3	0.	0.	0.	0.	0.
CM 245 3	2.171E-09	7.926E-09	1.938E-08	4.055E-08	4.998E-08
CM 246 3	5.843E-11	2.133E-10	5.216E-10	1.091E-09	1.299E-09
CM 247 3	0.	0.	0.	0.	0.
CM 248 3	0.	0.	0.	0.	0.
CF 252 3	0.	0.	0.	0.	0.

TABLE 12.1-32

ISOTOPIC CURIE CONTENT - EQUILIBRIUM CORE-EOC

CO2 72	NI2 72	CU2 72	ZN2 72	GA2 72	CO2 73
2.984E+0	4.894E+02	2.607E+03	4.207E+03	4.245E+03	7.212E-02
NI2 73	CU2 73	ZN2 73	GA2 73	GE1 73	CO2 74
2.783E+01	9.889+02	4.940E+03	5.645E+03	5.669E+03	1.339E-1
NI2 74	CU2 74	ZN2 74	GA2 74	CO2 75	NI2 75
5.263E+01	1.224+03	9.817E+03	1.141E+04	3.389E-02	1.544+01
CU2 75	ZN2 75	GA2 75	NI2 76	CU2 76	ZN2 76
7.692E+02	1.212E+04	1.813E+04	4.798E+00	3.184+02	1.481+04
GA2 76	AS2 76	NI2 77	CU2 77	ZN2 77	GA2 77
3.394E+04	8.747E+02	1.529E+00	1.879E+02	1.192E+04	5.780E+04
GE1 77	GE2 77	AS2 77	SE1 77	NI2 78	CU2 78
6.581E+04	3.483E+04	8.750+04	2.651E+02	2.607E-01	7.504E+01
ZN2 78	GA2 78	GE2 78	AS2 78	CU2 79	ZN2 79
8.095E+03	6.008E+04	1.467E+05	1.524E+05	1.694E+01	2.538E+03
GA2 79	GE2 79	AS2 79	SE1 79	SE2 79	BR1 79
4.868E+04	2.489E+05	2.875E+05	2.899E+05	4.678E+00	3.245E-01
CU2 80	ZN2 80	GA2 80	GE2 80	AS2 80	BR1 80
4.742E+00	1.962+03	3.772E+04	3.208E+05	4.433+05	1.121E+01

TABLE 12.1-32 (Continued)

BR2 80	CU2 81	ZN2 81	GA2 81	GE2 81	AS2 81
2.272E+01	5.134E-01	5.110E+02	2.289E+04	3.513E+05	6.476E+05
SE1 81	SE2 81	KR1 81	KR2 81	ZN2 82	GA2 82
3.133E+04	7.175E+05	2.961E-01	2.273E-06	9.049+01	8.798E+03
GE2 82	AS1 82	AS2 82	BR1 82	BR2 82	ZN2 83
3.377E+05	2.934E+05	6.587+05	9.033E+03	1.781E+04	8.255E+00
GA2 83	GE2 83	AS2 83	SE1 83	SE2 83	BR2 83
2.565E+03	2.253E+05	1.329E+06	1.567E+06	1.175E+06	2.823E+06
KR1 83	GA2 84	GE2 84	AS2 84	SE2 84	BR1 84
2.823E+06	5.228E+02	1.051E+05	1.052E+06	3.947E+06	2.532E+05
BR2 84	GA2 85	GE2 85	AS2 85	SE1 85	SE2 85
4.206E+06	1.002E-08	1.299E+04	4.030E+05	1.455+06	1.949E+06
BR2 85	KR1 85	KR2 85	GE2 86	AS2 86	SE2 86
4.884E+06	4.957E+06	1.034E+05	2.875E+03	1.733E+05	3.090E+06
BR1 86	BR2 86	RB1 86	RB2 86	GE2 87	AS2 87
3.031E+06	3.138E+06	1.700E+04	1.382E+05	3.251E+02	4.210E+04
SE2 87	BR2 87	KR2 87	RB2 87	SR1 87	GE2 88
1.726E+06	5.565E+06	8.056E+06	2.092E-04	8.554E+02	2.543E+01

TABLE 12.1-32 (Continued)

AS2 88	SE2 88	BR2 88	KR2 88	RB2 88	AS2 89
9.865E+03	8.761E+05	5.111+06	1.141E+07	1.193+07	1.110E+03
SE2 89	BR2 89	KR2 89	RB2 89 *	Y1 89	AS2 90
2.170E+05	3.087E+06	1.244E+07	1.558E+07	3.000E+01	3.812E-08
SE2 90	BR2 90	KR2 90	RB1 90	RB2 90	SR2 90
5.248E+04	1.339E+06	1.183E+07	4.718E+06	1.308E+07	6.791E+05
Y1 90	Y2 90	ZR1 90	SE2 91	BR2 91	KR2 91
9.232E+02	7.108+05	2.437E-01	6.532E+03	3.994E+05	8.030+06
RB2 91	SR2 91	Y1 91	Y2 91	SE2 92	BR2 92
1.799E+07	2.102E+07	1.212E+07	2.042E+07	8.293E+02	1.093E+05
KR2 92	RB2 92	SR2 92	Y2 92	SE2 93	BR2 93
4.188E+06	1.506E+07	2.459E+07	2.492E+07	7.106E-08	1.966E+04
KR2 93	RB2 93	SR2 93	Y1 93	Y2 93	ZR2 93
1.670E+06	1.152E+07	2.921E+07	1.159E+02	3.065E+07	3.419E+01
NB1 93	BR2 94	KR2 94	RB2 94	SR2 94	Y2 94
1.856E+00	2.024E+03	3.099E+05	5.461E+06	2.864E+07	3.326E+07
NB1 94	NB2 94	BR2 95	KR2 95	RB2 95	SR2 95
7.821E+01	8.026E-03	1.481E+02	8.760+04	1.626E+06	2.525E+07

*SR2 89
1.60+07

TABLE 12.1-32 (Continued)

Y2 95	ZR2 95	NB1 95	NB2 95	BR2 96	KR2 96
3.657E+07	3.624E+07	4.353E+05	3.476E+07	1.018E+01	1.578E+04
RB2 96	SR2 96	Y2 96	NB2 96	KR2 97	RB2 97
5.848E+05	1.489E+07	3.397E+07	1.381E+05	4.564E+02	6.197E+04
SR2 97	Y2 97	ZR2 97	NB1 97	NB2 97	KR2 98
4.154E+06	2.203E+07	4.092E+07	3.542E+07	4.124E+07	1.455E+02
RB2 98	SR2 98	Y2 98	ZR2 98	NB1 98	NB2 98
3.975E+04	2.656E+06	1.150E+07	4.145E+07	4.257E+07	6.661E+05
RB2 99	SR2 99	Y2 99	ZR2 99	NB1 99	NB2 99
4.399E+03	3.685E+05	8.174E+06	3.667E+07	2.466E+06	4.327E+07
MO2 99	TC1 99	RB2 100	SR2 100	Y2 100	ZR2 100
4.664E+07	4.025E+07	5.381E+02	2.518E+05	3.797E+06	3.509E+07
NB1 100	NB2 100	TC2 100	RB2 101	SR2 101	Y2 101
2.368E+07	2.367E+07	4.477E+06	3.386E-08	2.923E+04	1.389E+07
ZR2 101	NB2 101	MO2 101	TC2 101	SR2 102	Y2 102
1.988E+07	4.129E+07	5.136E+07	5.139E+07	3.200E+03	2.883E+05
ZR2 102	NB2 102	MO2 102	TC1 102	TC2 102	SR2 103
1.346E+07	3.673E+07	5.141E+07	1.009E+05	5.151+07	9.053E+01

TABLE 12.1-32 (Continued)

Y2 103	ZR2 103	NB2 103	MO2 103	TC2 103	RU2 103
5.192E+04	4.267E+06	2.587E+07	5.014E+07	5.144E+07	5.260E+07
RH1 103	SR2 104	Y2 104	ZR2 104	NB2 104	MO2 104
5.260+07	3.966E+00	4.130E+03	1.115E+06	9.915E+06	4.414E+07
TC2 104	RH1 104	RH2 104	Y2 105	ZR2 105	NB2 105
4.892E+07	2.552E+05	3.567E+06	2.120E+02	1.030E+05	3.097E+06
MO2 105	TC2 105	RU2 105	RH1 105	RH2 105	Y2 106
2.784E+07	3.712E+07	3.851E+07	9.935E+06	3.850E+07	2.280E-08
ZR2 106	NB2 106	MO2 106	TC2 106	RU2 106	RH1 106
9.031E+03	5.245E+05	1.513E+07	3.000E+07	1.957E+07	1.206E+04
RH2 106	Y2 107	ZR2 107	NB2 107	MO2 107	TC2 107
1.958E+07	8.634E-02	2.996E+02	5.869E+04	4.308E+06	1.572E+07
RU2 107	RH2 107	PD1 107	PD2 107	ZR2 108	NB2 108
2.228E+07	2.238E+07	1.867E+05	3.361E+00	1.445E+02	1.576E+04
MO2 108	TC2 108	RU2 108	RH1 108	RH2 108	AG2 108
9.097E+05	6.679E+06	1.489E+07	2.056E+05	1.510E+07	3.464E-01
ZR2 109	NB2 109	MO2 109	TC2 109	RU2 109	RH1 109
1.195E+01	3.857E+03	4.258E+05	4.718E+06	1.081E+07	5.613E+06

TABLE 12.1-32 (Continued)

RH2 109	PD1 109	PD2 109	AG1 109	CD2 109	NB2 110
1.123E+07	5.622E+06	1.159E+07	1.159E+07	3.468E-03	1.121E+02
MO2 110	TC2 110	RU2 110	RH1 110	RH2 110	AG1 110
3.152E+04	5.001E+05	3.766E+06	3.168E+05	4.187E+06	4.327E+04
AG2 110	NB2 111	MO2 111	TC2 111	RU2 111	RH2 111
6.042E+05	1.045E+01	2.782E+03	1.122E+05	1.615E+06	2.418E+06
PD1 111	PD2 111	AG1 111	AG2 111	CD1 111	NB2 112
6.111E+04	2.575E+06	2.566E+06	2.609E+06	1.963E+02	9.922E-10
MO2 112	TC2 112	RU2 112	RH2 112	PD2 112	AG2 112
2.445E+02	1.255E+04	3.241E+05	1.173E+06	1.360E+06	1.363E+06
MO2 113	TC2 113	RU2 113	RH2 113	PD2 113	AG1 113
2.584E+01	3.356E+03	1.563E+05	5.042E+05	9.061E+05	9.309E+05
AG2 113	CD1 113	IN1 113	MO2 114	TC2 114	RU2 114
8.193E+05	1.914E+03	2.350E-04	1.543E+00	3.877E+02	4.533E+04
RH2 114	PD2 114	AG2 114	IN1 114	IN2 114	MO2 115
2.661E+05	6.535E+05	6.714E+05	2.007E+01	3.226E+01	8.050E-02
TC2 115	RU2 115	RH2 115	PD2 115	AG1 115	AG2 115
6.701E+01	8.954E+03	1.325E+05	5.015E+05	1.650E+05	3.991E+05

TABLE 12.1-32 (Continued)

CD1 115	CD2 115	IN1 115	IN2 115	TC2 116	RU2 116
3.545E+04	5.462E+05	5.461E+05	1.107E-09	5.069E+00	2.249E+03
RH2 116	PD2 116	AG1 116	AG2 116	IN1 116	IN2 116
3.526E+04	3.315E+05	2.184E+05	2.248E+05	3.233E+04	8.907E+03
TC2 117	RU2 117	RH2 117	PD2 117	AG1 117	AG2 117
2.474E-01	2.264E+02	1.406E+04	2.239E+05	2.027E+05	2.084E+05
CD1 117	CD2 117	IN1 117	IN2 117	SN1 117	TC2 118
6.490E+04	3.991E+05	3.712E+05	2.674E+05	2.463E+02	1.992E-11
RU2 118	RH2 118	PD2 118	AG1 118	AG2 118	CD2 118
1.708E+03	1.184E+04	1.257E+05	1.713E+05	2.019E+05	4.458E+05
IN1 118	IN2 118	RU2 119	RH2 119	PD2 119	AG2 119
5.170E+02	4.464E+05	6.936E-07	6.082E+03	1.927E+05	4.020E+05
CD1 119	CD2 119	IN1 119	IN2 119	SN1 119	RU2 120
2.206E+05	2.206E+05	2.207E+05	2.317E+05	9.973E+03	3.864E-01
RH2 120	PD2 120	AG2 120	CD2 120	IN1 120	IN2 120
1.472E+02	1.923E+04	1.277E+05	4.162E+05	2.193E+05	2.206E+05
RH2 121	PD2 121	AG2 121	CD2 121	IN1 121	IN2 121
2.759E+01	4.928E+03	7.996E+05	3.984E+05	1.055E+05	3.656E+05

TABLE 12.1-32 (Continued)

SN1 121	SN2 121	RH2 122	PD2 122	AG2 122	CD2 122
1.941E+01	4.747E+05	4.007E+00	1.870E+03	2.311E+04	3.339E+05
IN1 122	IN2 122	SB1 122	SB2 122	RH2 123	PD2 123
5.355E+04	4.179E+05	4.222E+02	4.110E+04	5.249E-01	3.835E+02
AG2 123	CD2 123	IN1 123	IN2 123	SN1 123	SN2 123
1.662E+04	3.118E+05	1.959E+05	3.646E+05	2.041E+05	3.615E+05
TE1 123	TE2 123	PD2 124	AG2 124	CD2 124	IN2 124
1.695E+02	2.219E-11	1.214E+02	5.920E+03	2.604E+05	6.125E+05
SB2 124	PD2 125	AG2 125	CD2 125	IN1 125	IN2 125
2.498E+04	4.483E-08	2.903E+03	1.816E+05	3.917E+05	4.415E+05
SN1 125	SN2 125	SB2 125	TE1 125	PD2 126	AG2 126
5.836E+05	7.583E+05	3.964E+05	7.878E+04	3.681E+00	8.480E+02
CD2 126	IN2 126	SN2 126	SB2 126	AG2 127	CD2 127
1.093E+05	7.273E+05	1.947E+00	6.887+04	8.151E-08	4.680E+04
IN1 127	IN2 127	SN1 127	SN2 127	SB2 127	TE1 127
4.104E+05	3.841E+05	1.266E+06	2.165E+06	3.762E+06	5.399E+05
TE2 127	AG2 128	CD2 128	IN2 128	SN2 128	SB1 128
3.690E+06	1.225E+02	4.099E+04	6.840E+05	4.626E+06	5.225E+06

TABLE 12.1-32 (Continued)

SB2 128	I2 128	CD2 129	IN2 129	SN1 129	SN2 129
6.054E+05	2.573E+05	9.224E+03	4.333E+05	3.347E+06	3.352E+06
SB2 129	TE1 129	TE2 129	I2 129	XE1 129	CD2 130
1.029E+07	2.651E+06	9.706E+06	6.730E-01	2.071E+03	2.092E+04
IN2 130	SN2 130	SB1 130	SB2 130	I1 130	I2 130
5.655E+05	1.003E+07	1.226E+07	4.224E+06	3.288E+05	6.079E+05
CD2 131	IN2 131	SN2 131	SB2 131	TE1 131	TE2 131
3.291E+03	2.360E+05	9.170E+06	2.447E+07	4.454E+06	2.633E+07
I2 131	XE1 131	CD2 132	IN2 132	SN2 132	SB1 132
3.004E+07	2.121E+05	3.220E+02	6.328E+04	4.786E+06	8.503E+06
SB2 132	TE2 132	I2 132	IN2 133	SN2 133	SB2 133
1.332E+07	3.998E+07	4.080E+07	9.661E+03	1.435E+06	1.361E+07
TE1 133	TE2 133	I1 133	I2 133	XE1 133	XE2 133
1.683E+07	3.204E+07	2.349E+06	5.150E+07	1.62E+06	5.226E+07
IN2 134	SN2 134	SB1 134	SB2 134	TE2 134	I1 134
6.657E+02	2.828E+05	2.691E+06	2.343E+06	4.032E+07	7.157E+06
I2 134	XE1 134	CS1 134	CS2 134	SN2 135	SB2 135
5.465E+07	2.889E+05	2.652E+05	6.603E+05	2.819E+04	1.515E+06

TABLE 12.1-32 (Continued)

TE2 135	I2 135	XE1 135	XE2 135	CS1 135	CD2 135
2.459E+07	5.039E+07	1.109E+07	5.648E+07	2.758E+04	2.549E+01
BA1 135	SN2 136	SB2 136	TE2 136	I1 136	I2 136
2.318E+02	3.145E+03	2.441E+05	1.073E+07	1.254E+07	2.349E+07
CS2 136	BA1 136	SB2 137	TE2 137	I2 137	XE2 137
2.654E+06	4.247E+05	5.553E+04	3.948E+06	2.134E+07	4.569E+07
CS2 137	BA1 137	SB2 138	TE2 138	I2 138	XE2 138
1.702E+06	1.617E+06	7.528E+03	1.060E+06	1.075E+07	3.643E+07
CS1 138	CS2 138	XE2 138	LA2 138	SB2 139	TE2 139
2.542+06	4.649E+07	3.643E+07	6.734E-10	6.001E+02	2.014E+05
I2 139	XE2 139	CS2 139	BA2 139	TE2 140	I2 140
4.354E+06	3.334E+07	4.444E+07	4.529E+07	3.452E+04	1.181E+06
XE2 140	CS2 140	BA2 140	LA2 140	TE2 141	I2 141
1.955E+07	3.823E+07	4.190E+07	4.218E+07	1.312E+03	2.028E+05
XE2 141	CS2 141	BA2 141	LA2 141	CE2 141	TE2 142
7.600E+06	1.495E+07	4.265E+07	4.290E+07	4.287E+07	1.954E+02
I2 142	XE2 142	CS2 142	BA2 142	LA2 142	CE2 142
4.102E+04	2.711E+06	1.495E+07	3.655E+07	3.770E+07	3.806E-04

TABLE 12.1-32 (Continued)

PR1 142	PR2 142	I2 143	XE2 143	CS2 143	BA2 143
2.570E+05	5.130E+05	3.377E+03	3.726E+05	6.734E+06	3.046E+07
LA2 143	CE2 143	PR2 143	I2 144	XE2 144	CS2 144
3.455E+07	3.481E+07	3.478E+07	2.823E+02	1.192E+05	2.448E+06
BA2 144	LA2 144	CE2 144	PR1 144	PR2 144	ND2 144
2.120E+07	2.894E+07	2.016E+07	2.552E+05	2.019E+07	7.649E-09
I2 145	XE2 145	CS2 145	BA2 145	LA2 145	CE2 145
1.427E-08	1.710E+04	5.590E+05	1.148E+07	2.237E+07	2.501E+07
PR2 145	XE2 146	CS2 146	BA2 146	LA2 146	CE2 146
2.503E+07	1.143E+03	8.232E+04	4.536E+06	1.495E+07	2.060E+07
PR2 146	XE2 147	CS2 147	BA2 147	LA2 147	CE2 147
2.070E+07	8.668E+01	2.758E+04	1.376E+06	7.677E+06	1.620E+07
PR2 147	ND2 147	PM2 147	SM2 147	CS2 148	BA2 148
1.676E+07	1.703E+07	5.021E+06	3.044E-05	1.597E+03	3.829E+05
LA2 148	CE2 148	PR2 148	PM1 148	PM2 148	SM2 148
2.797E+06	1.218E+07	1.372E+07	7.387E+05	7.891E+05	1.157E-10
CS2 149	BA2 149	LA2 149	CE2 149	PR2 149	ND2 149
3.283E-07	4.344E+04	9.875E+05	5.986E+05	1.051E+07	1.110E+07

TABLE 12.1-32 (Continued)

PM2 149	SM2 149	CS2 150	BA2 150	LA2 150	CE2 150
1.110E+07	1.065E-09	1.593E+00	4.159E+03	1.722E+05	2.879E+06
PR2 150	PM2 150	BA2 151	LA2 151	CE2 151	PR2 151
7.327E+06	1.026E+04	1.152E-05	3.065E+04	1.043E+06	4.280E+06
ND2 151	PM2 151	SM2 151	BA2 152	LA2 152	CE2 152
6.637E+06	6.673E+06	6.838E+04	1.075E+01	3.215E+03	3.853E+05
PR2 152	ND2 152	PM2 152	EU1 152	EU2 152	GD2 152
2.259E+06	4.874E+06	4.949E+06	4.909E+03	3.072E+02	1.844E-11
LA2 153	CE2 153	PR2 153	ND2 153	PM2 153	SM2 153
4.127E+02	7.587E+04	8.321E+05	2.856E+06	3.178E+06	3.464E+06
GD2 153	LA2 154	CE2 154	PR2 154	ND2 154	PM1 154
5.706E+01	1.709E+01	1.181E+04	2.213E+05	1.830E+06	2.415E+05
PM2 154	EU2 154	LA2 155	CE2 155	PR2 155	ND2 155
2.095E+06	3.147E+04	5.061E-09	1.156E+03	6.465E+04	9.661E+05
PM2 155	SM2 155	EU2 155	CE2 156	PR2 156	ND2 156
1.518E+06	1.657E+06	2.834E+05	1.272E+02	1.022E+04	4.255E+05
PM2 156	SM2 156	EU2 156	CE2 157	PR2 157	ND2 157
8.852E+05	1.022E+06	1.339E+06	6.965E+00	1.555E+03	1.148E+05

TABLE 12.1-32 (Continued)

PM2 157	SM2 157	EU2 157	PR2 158	ND2 158	PM2 158
5.038E+05	7.415E+05	7.531E+05	9.092E+01	1.896E+04	1.679E+05
SM2 158	EU2 158	PR2 159	ND2 159	PM2 159	SM2 159
4.487E+05	4.682E+05	3.674E+00	1.621E+03	4.116E+04	2.302E+05
EU2 159	GD2 159	ND2 160	PM2 160	SM2 160	EU2 160
2.671E+05	2.954E+05	1.395E+02	6.625E+03	1.120E+05	1.624E+05
TB2 160	ND2 161	PM2 161	SM2 161	EU2 161	GD2 161
3.984E+04	7.062E+00	6.466E+02	2.282E+04	6.093E+04	9.125E+04
TB2 161	PM2 162	SM2 162	EU2 162	GD2 162	TB1 162
9.183E+04	8.563E+00	1.974E+03	1.799E+04	4.037E+04	1.592E+03
TB2 162	SM2 163	EU2 163	GD2 163	TB2 163	SM2 164
4.036E+04	1.318E+02	3.358E+03	1.587E+04	1.786E+04	1.052E+01
EU2 164	GD2 164	TB2 164	SM2 165	EU2 165	GD2 165
6.291E+02	8.073E+03	1.102E+04	3.951E-01	8.256E+01	2.744E+03
TB2 165	DY1 165	DY2 165	DY2 166	HO1 166	HO2 166
5.591E+03	4.335E+03	7.815E+03	1.131E+03	2.607E-01	1.731E+03
ER1 167					
1.894E+00					

TABLE 12.1-33

CRDL+ ACTIVATION

SOURCE TERM

Isotope	Gamma Energy (Mev)	Source Strength (Sz) As a Function of Length (z)* γ/cc-sec	Rod Length Applicable to S(z)
Co^{60}	1.17	$3.67 \times 10^{+9} e^{-0.120Z}$	0" - 17.5"
		$4.50 \times 10^{+8} e^{-0.0306(Z-17.5)}$	17.5" - 50.5"
		$1.64 \times 10^{+7} e^{-0.0510(Z-50.5)}$	50.5" - Top of Sodium Pool
	1.33	$3.67 \times 10^{+9} e^{-0.120Z}$	0" - 17.5"
		$4.50 \times 10^{+8} e^{-0.0306(Z-17.5)}$	17.5" - 50.5"
		$1.64 \times 10^{+7} e^{-0.0510(Z-50.5)}$	50.5" - Top of Sodium Pool
Ta^{182}	1.23	$4.28 \times 10^{+9} e^{-0.111Z}$	0" - 17.5"
		$5.53 \times 10^{+8} e^{-0.027(Z-17.5)}$	17.5" - 54.5"
		$2.04 \times 10^{+7} e^{-0.043(Z-54.5)}$	54.5" - 134.0"
		$6.68 \times 10^{+6} e^{-0.067(Z-134)}$	134.0" - Top of Sodium Pool

*Z = 0 at 31" above the core.
+ Control Rod Drive Line

TABLE 12.1-34 DELETED

TABLE 12.1-34A PRIMARY PUMP RADIOISOTOPE INVENTORY

Isotope	Inventory (Curies) 10 Days After Reactor Shutdown
Cr^{51}	3.92
Mn^{54}	119.3
Fe^{59}	.43
Co^{58}	63.2
Co^{60}	31.7
Sr^{89}	78.8
Sr^{90}	57.7
Y^{90}	57.7
Y^{91}	22.9
Zr^{95}	43.2
Nb^{95}	43.2
Mo^{99}	4.8
Ru^{103}	57.2
Ru^{106}	46.3
Rh^{106}	46.3
Ag^{111}	1.5
Te^{127}	157.6
Te^{127m}	157.6
Te^{129m}	475.5
Te^{129}	475.5
Te^{132}	338.8
I^{131}	0.23
I^{132}	338.8

TABLE 12.1-34A (Continued)

Isotope	Inventory (Curies) 10 Days After Reactor Shutdown
Cs^{134}	0.41
Cs^{136}	0.42
Cs^{137}	3.2
Ba^{140}	31.2
La^{140}	31.2
Ce^{141}	51.4
Ce^{143}	23.0
Pr^{143}	23.0
Ce^{144}	36.7
Pr^{144}	36.7
Nd^{147}	11.1
Pm^{147}	20.8
Pm^{149}	.61
Eu^{155}	2.7
Eu^{156}	1.02
Ta^{182}	2.79
Pu^{238}	.47
Pu^{239}	.12
Pu^{240}	.16
Pu^{241}	14.1
Pu^{242}	.0003
Np^{238}	.00001
Np^{239}	.07

TABLE 12.1-34A (Continued)

Isotope	Inventory (Curies) 10 Days After Reactor Shutdown
Am^{241}	.13
Am^{242m}	.005
Am^{242}	2.3×10^{-8}
Am^{243}	.002
Cm^{242}	.095
Cm^{243}	.001
Cm^{244}	.028
TOTAL	2913.6

TABLE 12.1-34B

INTERMEDIATE LEVEL (IALL) WASTE COLLECTION TANKS RADIOISOTOPE INVENTORY

ISOTOPE	INVENTORY (CURIES)	ISOTOPE	INVENTORY (CURIES)
Cr-51	8.84	Ce-141	51.4
Mn-54	63.6	Ce-143	23.0
Fe-59	0.43	Pr-143	23.0
Co-58	58.9	Ce-144	36.7
Co-60	16.5	Pr-144	36.7
Sr-89	78.8	Nd-147	11.1
Sr-90	57.7	Pm-147	20.8
Y-90	57.7	Pm-149	0.61
Y-91	22.8	Eu-155	2.7
Zr-95	43.2	Eu-156	1.02
Nb-95	43.2	Ta-182	2.79
Mo-99	4.8	Pu-238	0.47
Ru-103	57.2	Pu-239	0.12
Ru-106	46.3	Pu-240	0.16
Rh-106	46.3	Pu-241	14.1
Ag-111	1.5	Pu-242	.0003
Te-127	157.6	Np-238	.00001
Te-127m	157.6	Np-239	.07
Te-129m	475.5	Am-241	.13
Te-129	475.5	Am-242m	.005
Te-132	338.8	Am-242	2.3 (-8)
I-131	0.23	Am-243	.002
I-132	338.8	Cm-242	.095
Cs-134	0.41	Cm-243	.001
Cs-136	0.42	Cm-244	.028
Cs-137	3.2		
Ba-140	31.2		
La-140	31.2		
		TOTAL	2843.1

TABLE 12.1-35

LOW ACTIVITY LEVEL LIQUID WASTE
COLLECTION TANKS RADIOISOTOPE INVENTORY

ISOTOPE	INVENTORY (CURIES)	ISOTOPE	INVENTORY (CURIES)
Na-22	4.26(-5)	Ce-141	7.70(-7)
Na-24	5.31(-6)	Pr-143	4.06(-7)
Rb-86	1.7(-5)		
Sr-89	1.18(-6)	Nd-147	1.70(-7)
Sr-90	8.36(-7)	Pm-147	3.14(-7)
Y-90	8.36(-7)	Pu-238	1.96(-7)
Y-91	3.42(-7)	Pu-239	5.22(-8)
Zr-95	6.44(-7)	Pu-240	6.81(-8)
Nb-95	6.44(-7)	Pu-241	5.65(-6)
Ru-103	8.58(-7)	Pu-242	1.45(-10)
Ru-106	6.93(-7)	Np-238	2.21(-12)
Rh-106	6.93(-7)	Np-239	1.01(-8)
Sb-125	5.90(-6)	Ce-144	5.51(-7)
Sb-127	7.20(-6)	Pr-144	5.51(-7)
Te-127	2.40(-6)	Am-241	2.01(-8)
Te-127m	2.40(-6)	Am-242m	7.94(-10)
Te-129m	7.21(-6)	Am-242	7.94(-10)
Te-129	7.21(-6)	Am-243	3.15(-10)
Te-132	5.12(-6)	Cm-242	1.41(-8)
I-131	2.58(-4)	Cm-243	1.95(-10)
I-132	4.86(-5)	Cm-244	4.08(-9)
Cs-134	1.30(-4)	H-3	2.9(-5)
Cs-136	1.29(-4)		
Cs-137	1.04(-3)		
Ba-140	4.67(-7)		
La-140	4.67(-7)		
		TOTAL	1.75(-3)

TABLE 12.1-36

INTERMEDIATE LEVEL LIQUID
WASTE COLLECTION FILTERS RADIOISOTOPE INVENTORY

ISOTOPE	INVENTORY (CURIES)	ISOTOPE	INVENTORY (CURIES)
Cr-51	8.95(-1)	Ce-141	7.08(-2)
Mn-54	5.95(0)	Ce-143	3.16(-2)
Fe-59	4.36(-2)	Pr-143	3.16(-2)
Co-58	5.97(0)	Ce-144	5.05(-2)
Co-60	1.67(0)	Pr-144	5.05(-2)
Sr-89	1.08(-1)	Nd-147	1.53(-2)
Sr-90	7.95(-2)	Pm-147	2.86(-2)
Y-90	7.95(-2)	Pm-149	8.34(-4)
Y-91	3.14(-2)	Eu-155	3.74(-3)
Zr-95	5.95(-2)	Eu-156	1.40(-3)
Nb-95	5.95(-2)	Ta-182	2.82(-1)
Mo-99	6.61(-3)	Pu-238	6.47(-4)
Ru-103	7.87(-2)	Pu-239	1.65(-4)
Ru-106	6.37(-2)	Pu-240	2.20(-4)
Rh-106	6.37(-2)	Pu-241	1.94(-2)
Ag-111	2.06(-3)	Pu-242	4.13(-7)
Te-127	2.17(-1)	Np-238	1.38(-8)
Te-127m	2.17(-1)	Np-239	9.67(-5)
Te-129m	6.55(-1)	Am-241	1.80(-4)
Te-129	6.55(-1)	Am-242m	6.88(-6)
Te-132	4.66(-1)	Am-242	3.16(-11)
I-131	3.16(-4)	Am-243	2.75(-6)
I-132	4.66(-1)	Cm-242	1.31(-4)
Cs-134	5.65(-4)	Cm-243	1.37(-6)
Cs-136	5.78(-4)	Cm-244	3.85(-5)
Cs-137	4.40(-3)		
Ba-140	4.27(-2)		
La-140	4.27(-2)		
		Total	18.52 Curies

TABLE 12.1-36A

LALL FILTERS

RADIOISOTOPE INVENTORY

ISOTOPE	INVENTORY (CURIES)	ISOTOPE	INVENTORY (CURIES)
Na-24	1.98(-8)	Ce-141	2.79(-9)
Na-22	1.54(-7)	Pr-143	1.47(-9)
H-3	1.04(-7)	Ce-144	2.0(-9)
Rb-86	6.17(-8)	Pr-144	2.0(-9)
Sr-89	4.29(-9)	Nd-147	6.14(-10)
Sr-90	3.02(-9)	Pm-147	1.41(-9)
Y-90	3.02(-9)	Pm-149	---
Y-91	1.17(-9)	Eu-155	---
Zr-95	2.33(-9)	Eu-156	2.72(-6)
Nb-95	2.33(-9)	Pu-238	7.13(-10)
Ru-103	3.11(-9)	Pu-239	1.89(-10)
Ru-106	2.51(-9)	Pu-240	2.45(-10)
Rh-106	2.51(-9)	Pu-241	2.05(-8)
Sb-125	2.14(-8)	Pu-242	5.25(-13)
Sb-127	2.61(-8)	Np-238	8.02(-15)
Te-127	8.68(-9)	Np-239	3.66(-11)
Te-127m	8.68(-9)	Am-241	7.29(-11)
Te-129m	2.61(-8)	Am-242m	2.88(-12)
Te-129	2.61(-8)	Am-242	2.88(-12)
Te-132	1.68(-8)	Am-243	---
I-131	9.37(-7)	Cm-242	1.18(-12)
I-132	1.76(-7)	Cm-243	7.06(-13)
Cs-134	4.72(-7)	Cm-244	4.48(-10)
Cs-136	4.67(-7)		
Cs-137	3.3(-6)		
Ba-140	1.69(-9)		
La-140	1.69(-9)		
Rb-86	6.17(-8)		
		Total	1.42(-4)

TABLE 12.1-37

INTERMEDIATE AND LOW ACTIVITY LEVEL
EVAPORATOR FILTERS RADIOISOTOPE INVENTORY

ISOTOPE	INVENTORY (CURIES)	ISOTOPE	INVENTORY (CURIES)
Cr-51	7.96(-1)	Ce-141	7.94(-3)
Mn-54	5.72(0)	Ce-143	3.55(-3)
Fe-59	3.92(-2)	Pr-143	3.55(-3)
Co-58	5.90(0)	Ce-144	5.67(-3)
Co-60	1.49(0)	Pr-144	5.67(-3)
Sr-89	1.22(-2)	Nd-147	1.71(-3)
Sr-90	8.93(-3)	Pm-147	3.22(-3)
Y-90	8.93(-3)	Pm-149	9.46(-5)
Y-91	3.53(-3)	Eu-155	4.18(-4)
Zr-95	6.68(-3)	Eu-156	1.57(-4)
Nb-95	6.68(-3)	Ta-182	2.51(-1)
Mo-99	7.43(-4)	Pu-238	7.27(-5)
Ru-103	8.85(-3)	Pu-239	1.85(-5)
Ru-106	7.16(-3)	Pu-240	2.64(-5)
Rh-106	7.16(-3)	Pu-241	2.18(-3)
Ag-111	2.32(-4)	Pu-242	4.64(-8)
Te-127	2.44(-2)	Np-238	1.54(-9)
Te-127m	2.44(-2)	Np-239	1.09(-5)
Te-129m	7.35(-2)	Am-241	2.01(-5)
Te-129	7.35(-2)	Am-242m	7.73(-7)
Te-132	5.24(-2)	Am-242	3.55(-12)
I-131	3.55(-5)	Am-243	3.09(-7)
I-132	5.24(-2)	Cm-242	1.47(-5)
Cs-134	6.35(-5)	Cm-243	1.55(-7)
Cs-136	6.50(-5)	Cm-244	4.33(-6)
Cs-137	4.94(-4)		
Ba-140	4.82(-3)		
La-140	4.82(-3)		
		Total	14.01

TABLE 12.1-38

INTERMEDIATE AND LOW LEVEL LIQUID
EVAPORATORS RADIOISOTOPE INVENTORY

ISOTOPE	INVENTORY (CURIES)	ISOTOPE	INVENTORY (CURIES)
Cr-51	7.16	Ce-141	51.4
Mn-54	51.48	Ce-143	23.0
Fe-59	.351	Pr-143	23.0
Co-58	47.71	Ce-144	36.7
Co-60	14.9	Pr-144	36.7
Sr-89	78.8	Nd-147	11.1
Sr-90	57.7	Pm-147	20.8
Y-90	57.7	Pm-149	0.61
Y-91	22.8	Eu-155	2.7
Zr-95	43.2	Eu-156	1.02
Nb-95	43.2	Ta-182	2.26
Mo-99	4.8	Pu-238	0.47
Ru-103	57.2	Pu-239	0.12
Ru-106	46.3	Pu-240	0.16
Rh-106	46.3	Pu-241	14.1
Ru-106	46.3	Pu-242	.0003
Ag-111	1.5	Np-238	.00001
Te-127	157.6	Np-239	.07
Te-127m	157.6	Am-241	.13
Te-129m	475.5	Am-242m	.005
Te-129	475.5	Am-242	2.3(-8)
Te-132	338.8	Am-243	.002
I-131	0.23	Cm-242	.095
I-132	338.8	Cm-243	.001
Cs-134	4.41	Cm-242	.028
Cs-136	0.42		
Cs-137	3.2		
Ba-140	31.2		
La-140	31.2		
		Total	2815.8

TABLE 12.1-39

INTERMEDIATE LEVEL
DEMINERALIZERS RADIOISOTOPE INVENTORY

ISOTOPE	INVENTORY (CURIES)	ISOTOPE	INVENTORY (CURIES)
Cr-51	7.16(-1)	Ce-141	5.14(0)
Mn-54	5.148	Ce-143	2.3(0)
Fe-59	3.51(-2)	Pr-143	2.3(0)
Co-58	4.77(0)	Ce-144	3.67(0)
Co-60	1.47(-1)	Pr-144	3.67(0)
Sr-89	7.88(-1)	Nd-147	1.09(0)
Sr-90	5.77(0)	Pm-147	2.08(0)
Y-90	5.77(0)*	Pm-149	6.1(-2)
Y-91	2.28(0)	Eu-155	2.7(-1)
Zr-95	4.32(0)	Eu-156	1.02(-1)
Nb-95	4.32(0)	Ta-182	2.26(-1)
Mo-99	4.8(-1)	Pu-238	4.7(-2)
Ru-103	5.72(0)	Pu-239	1.2(-2)
Ru-106	4.63(0)	Pu-240	1.6(-2)
Rh-106	4.63(0)	Pu-241	1.41(0)
Ag-111	1.51(-1)	Pu-242	0.00003(-5)
Te-127	15.76(1)	Np-238	0.000001(-7)
Te-127m	15.76(1)	Np-239	0.007(-3)
Te-129m	47.5(1)	Am-241	0.013(-2)
Te-129	47.5(1)	Am-242m	0.0005(-4)
Te-132	33.8(1)	Am-242	2.3(-9)
I-131	2.3(-2)	Am-243	0.0002(-4)
I-132	3.3(1)	Cm-242	0.0095(-3)
Cs-134	4.41(-2)	Cm-243	0.0001(-5)
Cs-136	4.2(-2)	Cm-244	0.0028(-3)
Cs-137	3.2(-1)		
Ba-140	3.12(0)		
La-140	3.12(0)		
		Total	281.6 (Curies)

TABLE 12.1-39A

LALL DISTILLATE DEMINERALIZERS
RADIOISOTOPE INVENTORY

ISOTOPE	INVENTORY (CURIES)	ISOTOPE	INVENTORY (CURIES)
Na-22	4.26(-5)	Ce-141	7.70(-7)
Na-29	5.31(-6)	Pr-143	4.06(-7)
Rb-86	1.7(-5)	Ce-144	5.51(-7)
Sr-89	1.18(-6)	Pr-144	5.51(-7)
Sr-90	8.36(-7)	Nd-147	1.70(-7)
Y-90	8.36(-7)	Pm-147	3.14(-7)
Y-91	3.42(-7)	Pu-238	1.96(-7)
Zr-95	6.44(-7)	Pu-239	5.22(-8)
Nb-95	6.44(-7)	Pu-240	6.81(-8)
Ru-103	8.58(-7)	Pu-241	5.65(-6)
Ru-106	6.93(-7)	Pu-242	1.45(-10)
Sb-125	5.90(-6)	Np-238	2.21(-12)
Sb-127	7.20(-6)	Np-239	1.01(-8)
Te-127	2.40(-6)	Am-241	2.01(-8)
Te-127m	2.40(-6)	Am-242m	7.94(-10)
Te-129m	7.21(-6)	Am-242	7.94(-10)
Te-129	7.21(-6)	Am-243	3.25(-10)
Te-132	5.12(-6)	Cm-242	1.41(-8)
I-131	2.58(-4)	Cm-243	1.95(-10)
I-132	4.86(-5)	Cm-244	4.08(-4)
Cs-134	1.30(-4)		
Cs-136	1.29(-4)		
Cs-137	1.04(-7)		
Ba-140	4.67(-7)		
La-140	4.67(-7)		
		Total	1.75(-3)

TABLE 12.1-40

IALL DISTILLATE DEMINERALIZER
RESIN TRAPS RADIOISOTOPE INVENTORY

ISOTOPE	INVENTORY (CURIES)	ISOTOPE	INVENTORY (CURIES)
Cr-51	4.37(-2)	Ce-141	3.175(-1)
Mn-54	3.14(-1)	Ce-143	1.42(-1)
Fe-59	2.1(-3)	Pr-143	1.42(-1)
Co-58	2.91(-1)	Ce-144	2.27(-1)
Co-60	8.15(-2)	Pr-144	2.27(-1)
Sr-89	4.87(-1)	Nd-147	6.86(-2)
Sr-90	3.56(-1)	Pm-147	1.29(-1)
Y-90	3.56(-1)	Pm-149	3.8(-3)
Y-91	1.41(-1)	Eu-155	1.7(-2)
Zr-95	2.67(-1)	Eu-156	6.3(-4)
Nb-95	2.67(-1)	Ta-182	1.4(-2)
Mo-99	2.67(-1)	Pu-238	2.9(-3)
Ru-103	3.53(-1)	Pu-239	7.41(-4)
Ru-106	2.86(-1)	Pu-240	9.88(-4)
Rh-106	2.86(-1)	Pu-241	8.7(-2)
Ag-111	9.3(-2)	Pu-242	1.85(-6)
Te-127	9.74(-1)	Np-238	6.18(-8)
Te-127m	9.74(-1)	Np-239	4.32(-4)
Te-129m	2.93(0)	Am-241	8.03(-4)
Te-129	2.93(0)	Am-242m	3.09(-5)
Te-132	2.09(0)	Am-242	1.42(-10)
I-131	1.4(-3)	Am-243	1.24(-5)
I-132	2.09(0)	Cm-242	5.87(-4)
Cs-134	2.72(-1)	Cm-243	6.18(-6)
Cs-136	2.6(-3)	Cm-244	1.73(-4)
Cs-137	1.98(-2)		
Ba-140	1.92(-1)		
La-140	1.92(-1)		
		Total	17.62 Curies

TABLE 12.1-40A

LALL RESIN TRAPS
RADIOISOTOPE INVENTORY

ISOTOPE	INVENTORY (CURIES)	ISOTOPE	INVENTORY (CURIES)
Na-22	2.56(-6)	Ce-141	4.62(-8)
Na-24	3.19(-7)	Pr-143	2.44(-8)
Rb-86	3.54(-7)	Ce-144	3.31(-8)
Sr-89	7.08(-8)	Pr-144	3.31(-8)
Sr-90	5.02(-8)	Nd-147	1.02(-8)
Y-90	5.02(-7)	Pm-147	1.88(-8)
Y-91	2.05(-8)	Eu-155	
Zr-95	3.86(-8)	Eu-156	
Nb-95	3.86(-8)	Ta-182	1.22(-6)
Ru-103	5.15(-8)	Pu-238	1.18(-8)
Ru-106	4.16(-8)	Pu-239	3.13(-9)
Rh-106	4.16(-8)	Pu-240	3.71(-9)
Sb-125	4.32(-7)	Pu-241	3.39(-7)
Sb-127	1.02(-6)	Pu-242	8.70(-12)
Te-127	1.44(-7)	Np-238	1.33(-13)
Te-127m	1.44(-7)	Np-239	6.06(-10)
Te-129m	4.33(-7)	Am-241	1.21(-9)
Te-129	4.33(-7)	Am-242m	4.76(-11)
Te-132	3.07(-7)	Am-242	4.76)-11)
I-131	1.55(-5)	Am-243	1.95(-11)
I-132	2.91(-6)	Cm-242	8.70(-6)
Cs-134	7.80(-6)	Cm-243	8.46(-10)
Cs-136	7.80(-6)	Cm-244	2.45(-10)
Cs-137	6.24(-5)		
Ba-140	2.80(-8)		
La-140	2.80(-8)		
		TOTAL	1.05(-4)

TABLE 12.1-41 DELETED

TABLE 12.1-42 DELETED

TABLE 12.1-43

CONCENTRATE WASTE COLLECTION TANK RADIOISOTOPE INVENTORY

ISOTOPE	INVENTORY (CURIES)	ISOTOPE	INVENTORY (CURIES)
Cr-51	7.16	Ce-141	51.4
Mn-54	51.48	Ce-143	23.0
Fe-59	0.351	Pr-143	23.0
Co-58	47.71	Ce-144	36.7
Co-60	14.7	Pr-144	36.7
Sr-89	78.8	Nd-147	11.1
Sr-90	57.7	Pm-147	20.8
Y-90	57.7	Pm-149	0.61
Y-91	22.8	Eu-155	2.7
Zr-95	43.2	Eu-156	1.02
Nb-95	43.2	Ta-182	2.26
Mo-99	4.8	Pu-238	0.47
Ru-103	57.2	Pu-239	0.12
Ru-106	46.3	Pu-240	0.16
Rh-106	46.3	Pu-241	14.1
Ag-111	1.5	Pu-242	0.0003
Te-127	157.6	Np-238	0.00001
Te-127m	157.6	Np-239	0.07
Te-129m	475.5	Am-241	0.13
Te-129	475.5	Am-242m	0.005
Te-132	338.8	Am-242	2.3(-8)
I-131	0.23	Am-243	0.002
I-132	338.8	Cm-242	0.079
Cs-134	0.41	Cm-243	0.001
Cs-136	0.42	Cm-244	0.028
Cs-137	3.2		
Ba-140	31.2		
La-140	31.2		
		Total	2813.

TABLE 12.1-44

SOLID RADIOACTIVE WASTE DECANTING
TANK RADIOISOTOPIC INVENTORY

ISOTOPE	INVENTORY (CURIES)	ISOTOPE	INVENTORY (CURIES)
Cr-51	0.716(-1)	Ce-141	5.14
Mn-54	5.148	Ce-143	2.3
Fe-59	3.51(-2)	Pr-143	2.3
Co-58	4.77	Ce-144	3.67
Co-60	1.47	Pr-144	3.67
Sr-89	7.88	Nd-147	1.11
Sr-90	5.77	Pm-147	2.08
Y-90	5.77	Pm-149	6.1(-2)
Y-91	2.28	Eu-155	2.7(-1)
Zr-95	4.32	Eu-156	1.02(-2)
Nb-95	4.32	Ta-182	2.26(-1)
Mo-99	4.8(-1)	Pu-238	4.7(-2)
Ru-103	5.72	Pu-239	1.26(-2)
Ru-106	4.63	Pu-240	1.6(-2)
Rh-106	4.63	Pu-241	1.41
Ag-111	1.5(-1)	Pu-242	3(-5)
Te-127	15.76	Np-238	1(-6)
Te-127m	15.76	Np-239	7(-3)
Te-129m	47.5(1)	Am-241	1.3(-2)
Te-129	47.5(1)	Am-242m	5(-4)
Te-132	33.8	Am-242	2.3(-9)
I-131	2.3(-2)	Am-243	2(-4)
I-132	33.88	Cm-242	9.5(-3)
Cs-134	4.41(-2)	Cm-243	1(-4)
Cs-136	4.2(-2)	Cm-244	2.8(-3)
Cs-137	3.2(-1)		
Ba-140	3.12		
La-140	3.12		
		Total	281.6 Curies

TABLE 12.1-45

SOLID RADIOACTIVE WASTE DECANT
FILTERS RADIOISOTOPIC INVENTORY

ISOTOPE	INVENTORY (CURIES)	ISOTOPE	INVENTORY (CURIES)
Cr-51	7.16(-3)	Ce-141	5.14(-2)
Mn-54	5.14(-2)	Ce-143	2.3(-2)
Fe-59	3.51(-4)	Pr-143	2.3(-2)
Co-58	4.77(-2)	Ce-144	3.67(-2)
Co-60	1.47(-2)	Pr-144	3.67(-2)
Sr-89	7.88(-2)	Nd-147	1.11(-2)
Sr-90	5.77(-2)	Pm-147	2.08(-2)
Y-90	5.77(-2)	Pm-149	6.1(-4)
Y-91	2.28(-2)	Eu-155	2.7(-3)
Zr-95	4.32(-2)	Eu-156	1.02(-3)
Nb-95	4.32(-3)	Ta-182	2.26(-3)
Mo-99	4.8(-3)	Pu-238	4.7(-4)
Ru-103	5.72(-2)	Pu-239	1.2(-4)
Ru-106	4.63(-2)	Pu-240	1.6(-4)
Rh-106	4.63(-2)	Pu-241	1.41(-2)
Ag-111	1.51(-3)	Pu-242	3.5(-7)
Te-127	1.56(-1)	Np-238	1.(-8)
Te-127m	1.56(-1)	Np-239	7.(-5)
Te-129m	4.75(-1)	Am-241	1.3(-4)
Te-129	4.75(-1)	Am-242m	5(-6)
Te-132	3.38(-1)	Am-242	2.3(-11
I-131	2.3(-4)	Am-243	2(-6)
I-132	3.388(-1)	Cm-242	4.51(-5)
Cs-134	4.41(-4)	Cm-243	1(-6)
Cs-136	4.2(-2)	Cm-244	2.8(-5)
Cs-137	3.2(-3)		
Ba-140	3.12(-2)		
La-140	3.12(-2)		
		Total	2.82 Curies

TABLE 12.1-46

SOLID RADIOACTIVE WASTE RADWASTE
DRUM RADIOISOTOPE INVENTORY

ISOTOPE	INVENTORY (CURIES)	ISOTOPE	INVENTORY (CURIES)
Cr-51	5.51(-2)	Ce-141	3.95(-1)
Mn-54	3.97(-1)	Ce-143	1.77(-1)
Fe-59	2.7(-3)	Pr-143	1.77(-1)
Co-58	3.68(-1)	Ce-144	2.82(-1)
Co-60	1.13(-1)	Pr-144	2.82(-1)
Sr-89	6.06(-1)	Nd-147	8.54(-2)
Sr-90	4.44(-1)	Pm-147	1.60(-1)
Y-90	4.44(-1)	Pm-149	4.69(-3)
Y-91	1.75(-1)	Eu-155	2.08(-2)
Zr-95	3.32(-1)	Eu-156	7.85(-3)
Nb-95	3.32(-1)	Ta-182	1.72(-2)
Mo-99	3.69(-2)	Pu-238	3.62(-3)
Ru-103	4.40(-1)	Pu-239	9.23(-4)
Ru-106	3.56(-1)	Pu-240	1.23(-3)
Rh-106	3.56(-1)	Pu-241	1.08(-1)
Ag-111	1.15(-2)	Pu-242	2.31(-6)
Te-127	1.21(0)	Np-238	7.69(-8)
Te-127m	1.21(0)	Np-239	5.38(-4)
Te-129m	3.66(0)	Am-241	1.00(-3)
Te-129	3.66(0)	Am-242m	3.85(-5)
Te-132	2.61(0)	Am-242	1.77(-10)
I-131	1.77(-3)	Am-243	1.54(-5)
I-132	2.61(0)	Cm-242	7.31(-4)
Cs-134	3.15(-3)	Cm-243	7.69(-6)
Cs-136	3.23(-3)	Cm-244	2.15(-4)
Cs-137	2.46(-2)		
Ba-140	2.40(-1)		
La-140	2.40(-1)		
		Total	21.7 Curies

TABLE 12.1-47

SOLID RADIOACTIVE WASTE RADWASTE DRUM
(SPENT RESINS) RADIOISOTOPE INVENTORY

ISOTOPE	INVENTORY (CURIES)	ISOTOPE	INVENTORY (CURIES)
Cr-51	4.2(-2)	Ce-141	3.02(-1)
Mn-54	3.02(-1)	Ce-143	1.35(-1)
Fe-59	2.06(-3)	Pr-143	1.35(-1)
Co-58	2.8(-1)	Ce-144	2.15(-1)
Co-60	9.0(-2)	Pr-144	2.15(-1)
Sr-89	4.62(-1)	Nd-147	6.51(-2)
Sr-90	3.39(-1)	Pm-147	1.22(-1)
Y-90	3.39(-1)	Pm-149	3.6(-3)
Y-91	1.34(-1)	Eu-155	1.58(-2)
Zr-95	2.54(-1)	Eu-156	6.0(-3)
Nb-95	2.54(-1)	Ta-182	1.33(-2)
Mo-99	2.82(-2)	Pu-238	2.8(-3)
Ru-103	3.36(-1)	Pu-239	7.04(-4)
Ru-106	2.72(-1)	Pu-240	9.39(-4)
Rh-106	2.72(-1)	Pu-241	8.28(-2)
Ag-111	8.8(-3)	Pu-242	1.76(-6)
Te-127	9.25(-1)	Np-238	5.87(-8)
Te-127m	9.25(-1)	Np-239	4.09(-4)
Te-129m	2.79(0)	Am-241	7.54(-4)
Te-129	2.79(0)	Am-242m	2.93(-5)
Te-132	1.98(0)	Am-242	1.35(-10)
I-131	1.3(-3)	Am-243	1.17(-5)
I-132	1.99(0)	Cm-242	1.43(-4)
Cs-134	2.6(-3)	Cm-243	5.86(-6)
Cs-136	2.5(-3)	Cm-244	1.64(-4)
Cs-137	1.88(-2)		
Ba-140	1.83(-1)		
La-140	1.83(-1)		
		TOTAL	16.52

TABLE 12.1-48 HAS BEEN INTENTIONALLY DELETED

TABLE 12.1-49

DOSE RATES AT SELECTED PLANT LOCATION
DUE TO CRBRP DIRECT RADIATION

		Peak Dose Rate (mrem/hr)	Shutdown Dose Rate (mrem/hr)	Annual* Dose (rem)
I	Site Boundary	1×10^{-5} to 1×10^{-4}	---	$\sim 1 \times 10^{-5}$
II	Control Room	2×10^{-6}	---	$\sim 1 \times 10^{-5}$
49 III	Edge of Restricted Buildings** (Intermediate Building)	0.2	1.3×10^{-5}	1.4
49 IV	Reactor Containment Building			
	1. Adjacent to Reactor Cavity Overflow Cell Cooler	10.0	1.3×10^{-3}	70.0
	2. Adjacent to PHTS Cell Gas Cooler	10.0	1.3×10^{-3}	70.0
	3. Above IHX or Operating Floor	0.2	2.5×10^{-5}	1.4
	4. Adjacent to Cold Traps and Overflow Tank Cell in Stairwell	2.0	6.0×10^{-6}	14.0
	5. Adjacent to PHTS Cells #2 and #3 in Stairwell	2.0	2.5×10^{-4}	14.0
	6. Above hot leg piping on operating floor	0.2	2.5×10^{-5}	1.4
	7. Cold Traps NaK Cell	10.0	1.3×10^{-3}	70.0
49	8. Adjacent to Sample System at El. 766'-0"	10.0	1.3×10^{-3}	70.0

Amend. 49
April 1979

TABLE 12.1-49 (Continued)

	Peak Dose Rate (mrem/hr)	Shutdown Dose Rate (mrem/hr)	Annual* Dose (rem)
49 V Reactor Service Building			
1. In the FHC Operating Gallery	0.2	Background	0.10++
2. Adjacent to the RAPS Cell at Elevation 7 92 ft. 49	2.0	Background	14.0

44

*Annual dose rates are calculated based on 8760-hr per year with a plant availability factor of 0.8. Sample calculation for the location V.4 : 0.8 (8760 hr/yr) x (2 mrem/hr) + 0.2 (8760 hr/yr) x (6×10^{-6} mrem/hr) = 14016 mrem/yr $\simeq$ 14.0 rem/yr.

**See discussion on page 12.1-2

++Adjusted for decay of expended fuel

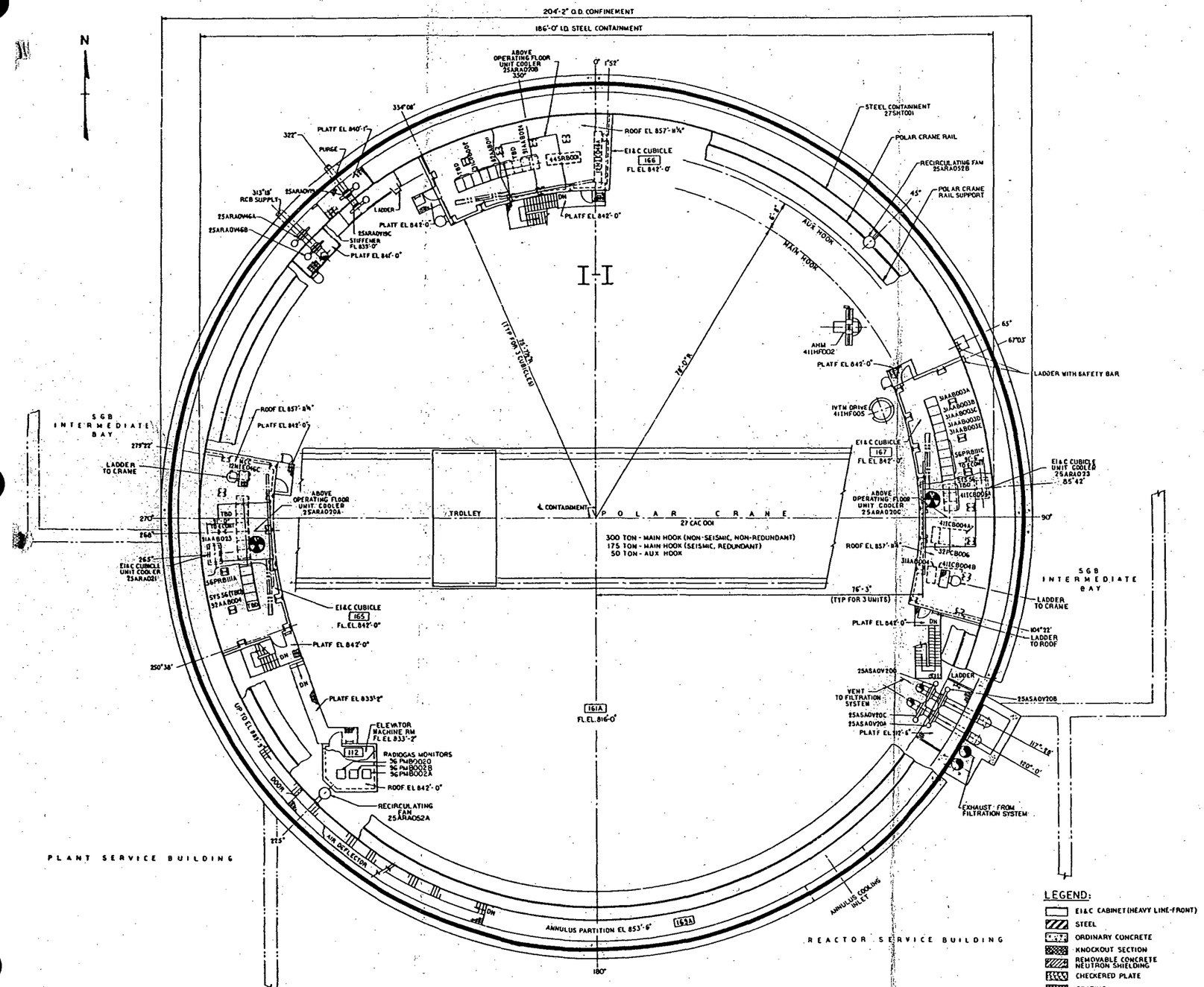

PLAN ABOVE EL 842'-0"

GENERAL NOTES

1. THE FIRST RADIATION ZONE DESIGNATION REFERS TO THE RADIATION LEVEL IN A CELL WHILE OPERATING. THE SECOND DESIGNATION DURING CELL SHUTDOWN. THE SHUTDOWN CONDITION REQUIRES THAT THE PIPE AND/OR EQUIPMENT IN A CELL BE DRAINED, PURGED OR VOIDED OF RADIOACTIVE SOURCES AS NECESSARY. RADIATION SOURCES INTERNAL AND EXTERNAL TO A CELL ARE CONSIDERED

2. PLANT RADIATION ZONE CLASSIFICATION

ZONE CLASS	DESIGN DOSE RATE RANGE (MREM/HR)	ZONE DESCRIPTION	DESIGN OCCUPANCY CRITERIA
I	≤ 0.2	RESTRICTED AREA ROUTINELY OCCUPIED	FULL TIME
II	> 0.2 TO ≤ 5	RESTRICTED AREA NOT ROUTINELY OCCUPIED	10CFR20
III	> 5 TO ≤ 100	RADIATION AREA LIMITED ACCESS FOR ROUTINE TASKS	10CFR20
IV	> 100 TO ≤ 5000	HIGH RADIATION AREA ACCESS TO PERFORM SPECIFIC NON-ROUTINE TASK	10CFR20
V	> 5000	INACCESSIBLE	10CFR20

3. THESE RADIATION ZONE DRAWINGS ARE TO BE USED ONLY FOR RADIATION ZONE INFORMATION.

LEGEND:

- EI&C CABINET (HEAVY LINE-FRONT)
- STEEL
- ORDINARY CONCRETE
- KNOCKOUT SECTION
- REMOVABLE CONCRETE NEUTRON SHIELDING
- CHECKERED PLATE
- GRATING
- 131 CELL NUMBER
- TBD TO BE DETERMINED
- MAJOR RADIATION SOURCES

- Alpha Mobile Monitor
- P/G/I Mobile Monitor
- Alpha Mobile Monitor

REFERENCE DRAWINGS

NN7400 - DESIGN RADIATION DOSE RATES RCB PLAN ABOVE EL 816'-0"

NN7401 - DESIGN RADIATION DOSE RATES RCB PLAN ABOVE EL 794'-0"

NN7402 - DESIGN RADIATION DOSE RATES RCB PLAN ABOVE EL 780'-0"

NN7403 - DESIGN RADIATION DOSE RATES RCB PLAN ABOVE EL 766'-0"

NN7404 - DESIGN RADIATION DOSE RATES RCB PLAN ABOVE EL 752'-8"

NN7405 - DESIGN RADIATION DOSE RATES RCB PLAN ABOVE EL 733'-0"

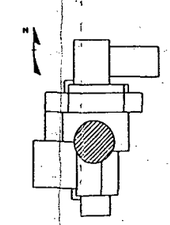

KEY PLAN

Figure 12.1-1 Plant Radiation Protection

NN7399-0

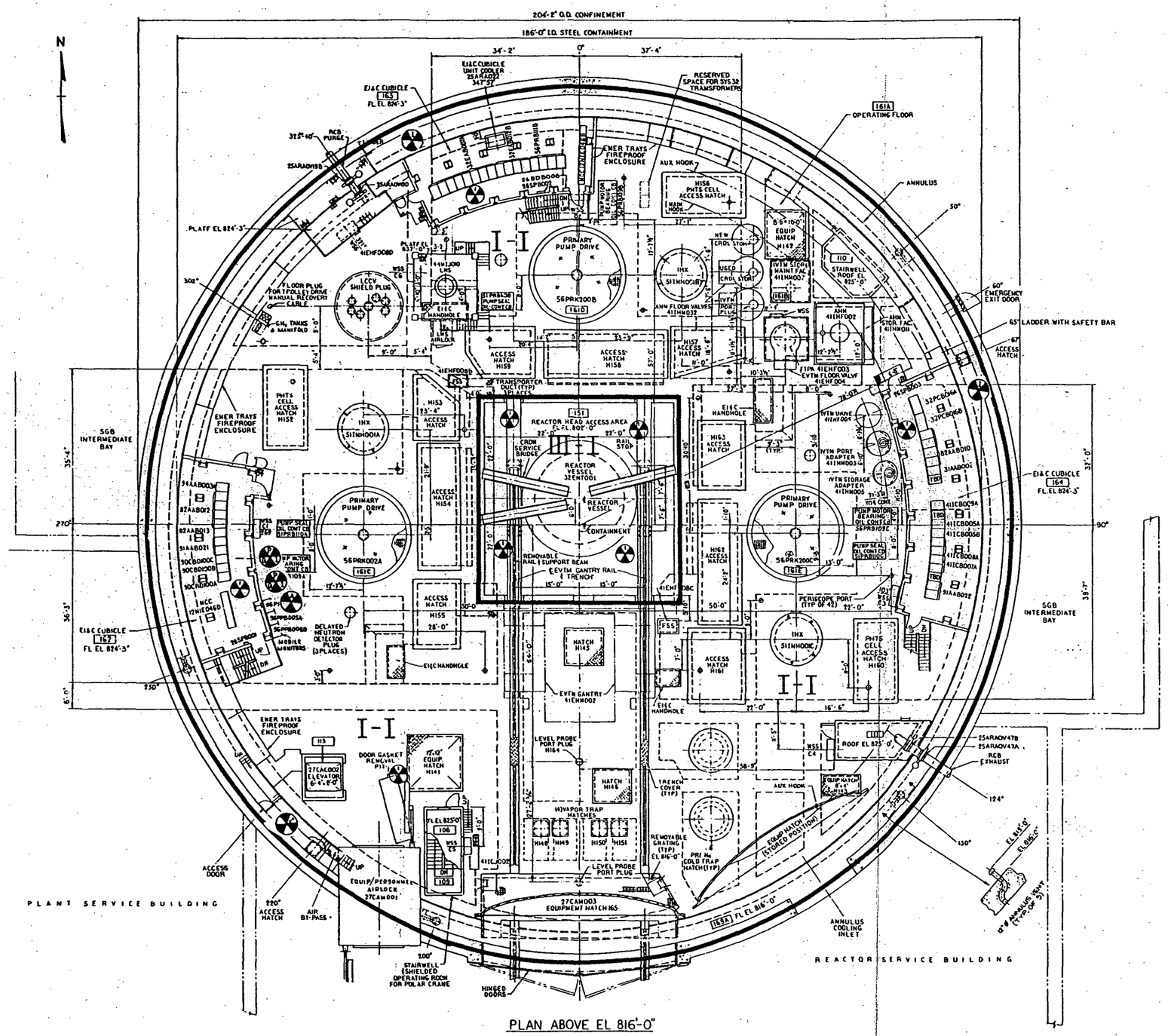

REFERENCE DRAWINGS
SEE DRAWING NN7399

GRAPHIC SCALE

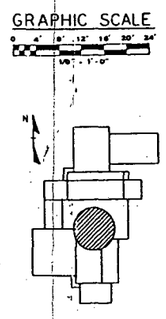

KEY PLAN

Figure 12.1-2 Plant Radiation Protection

Amend. 72
Oct. 1982

NN7400-1

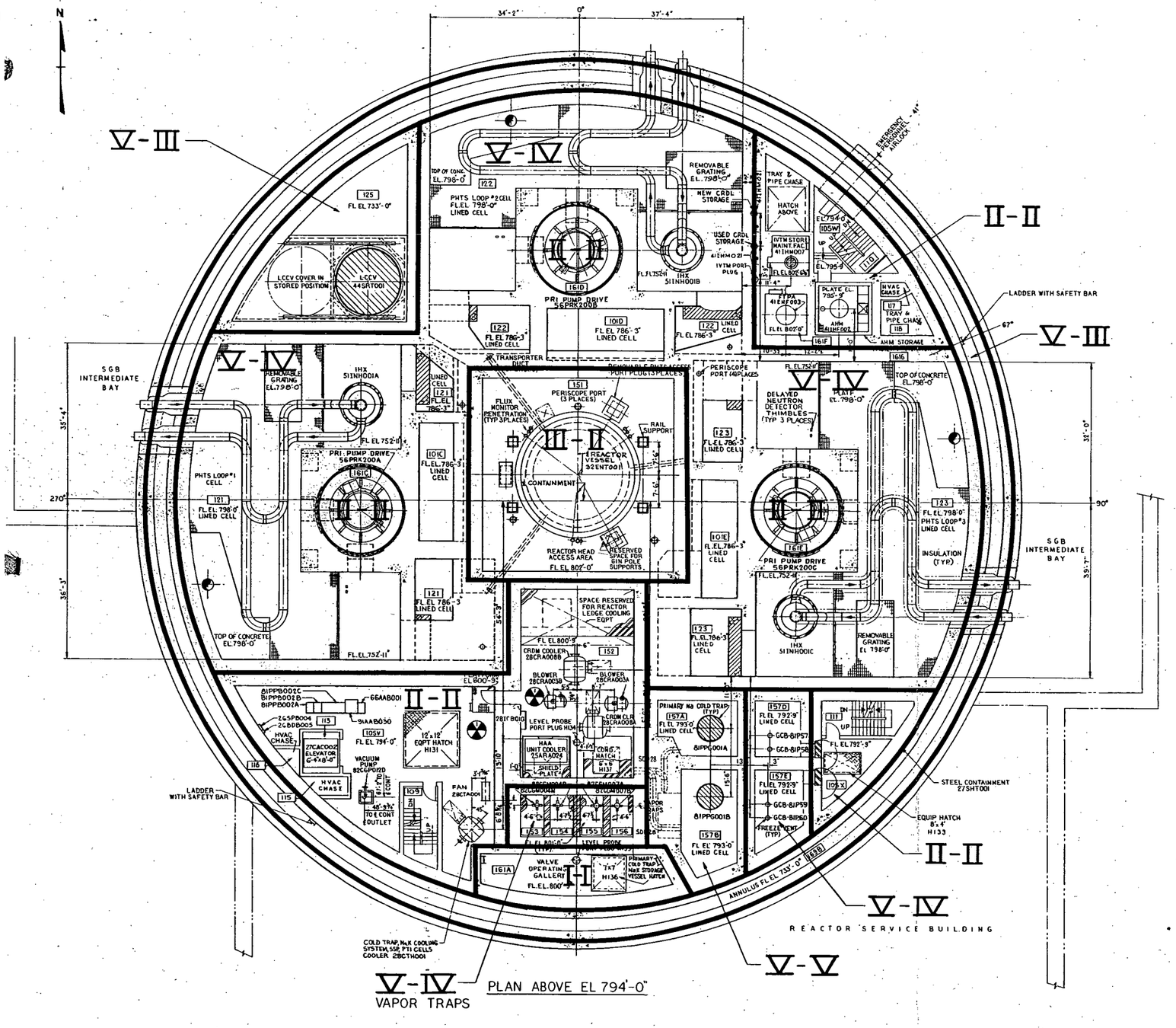

Figure 12.1-3 Plant Radiation Protection
12.1-83

Amend. 49
April 197

NN7401-1

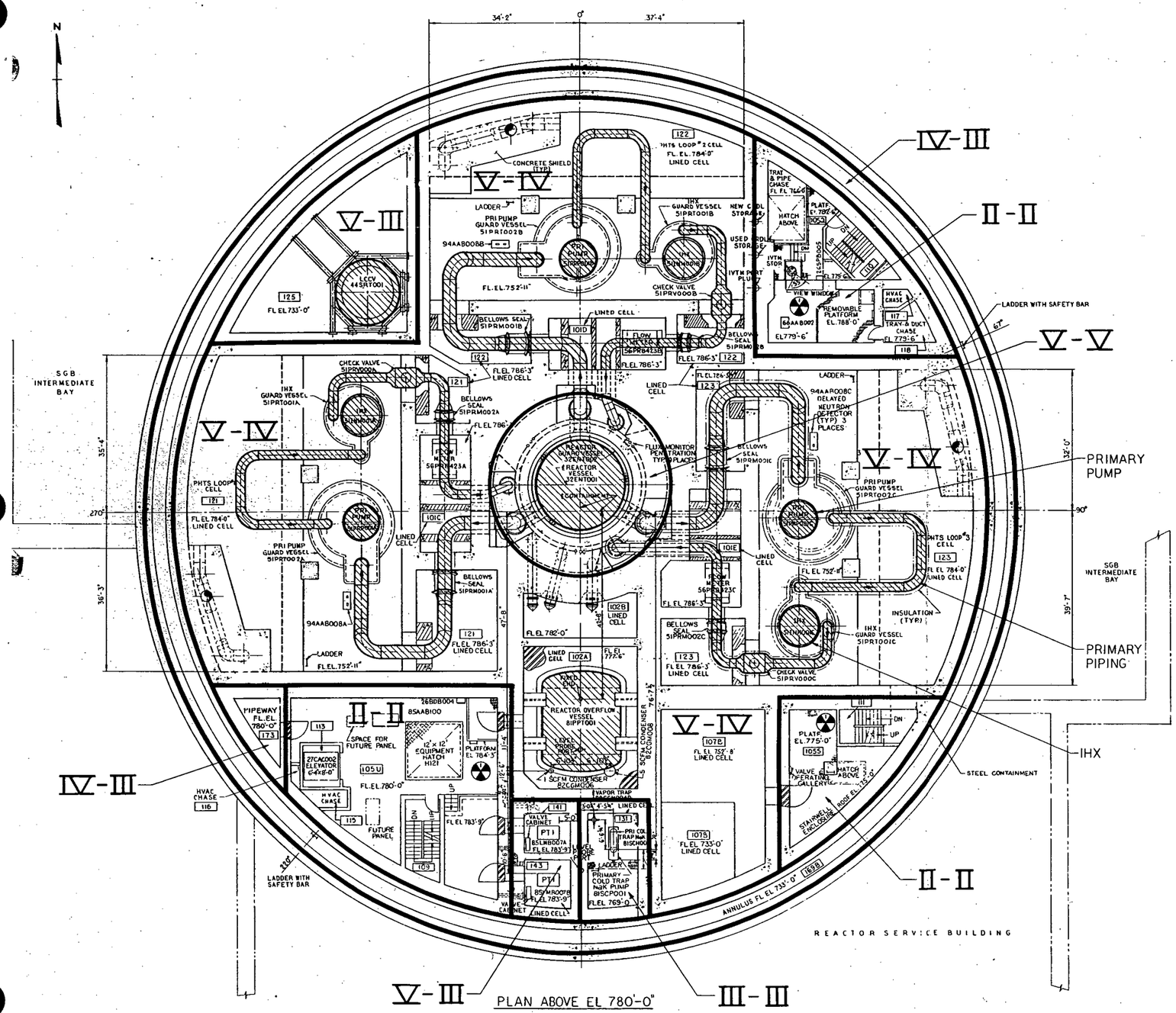

REFERENCE DRAWINGS
SEE DRAWING NN7399

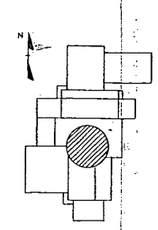

Figure 12.1-4 Plant Radiation Protection

Amend. 49
April 1979

NN7402-1

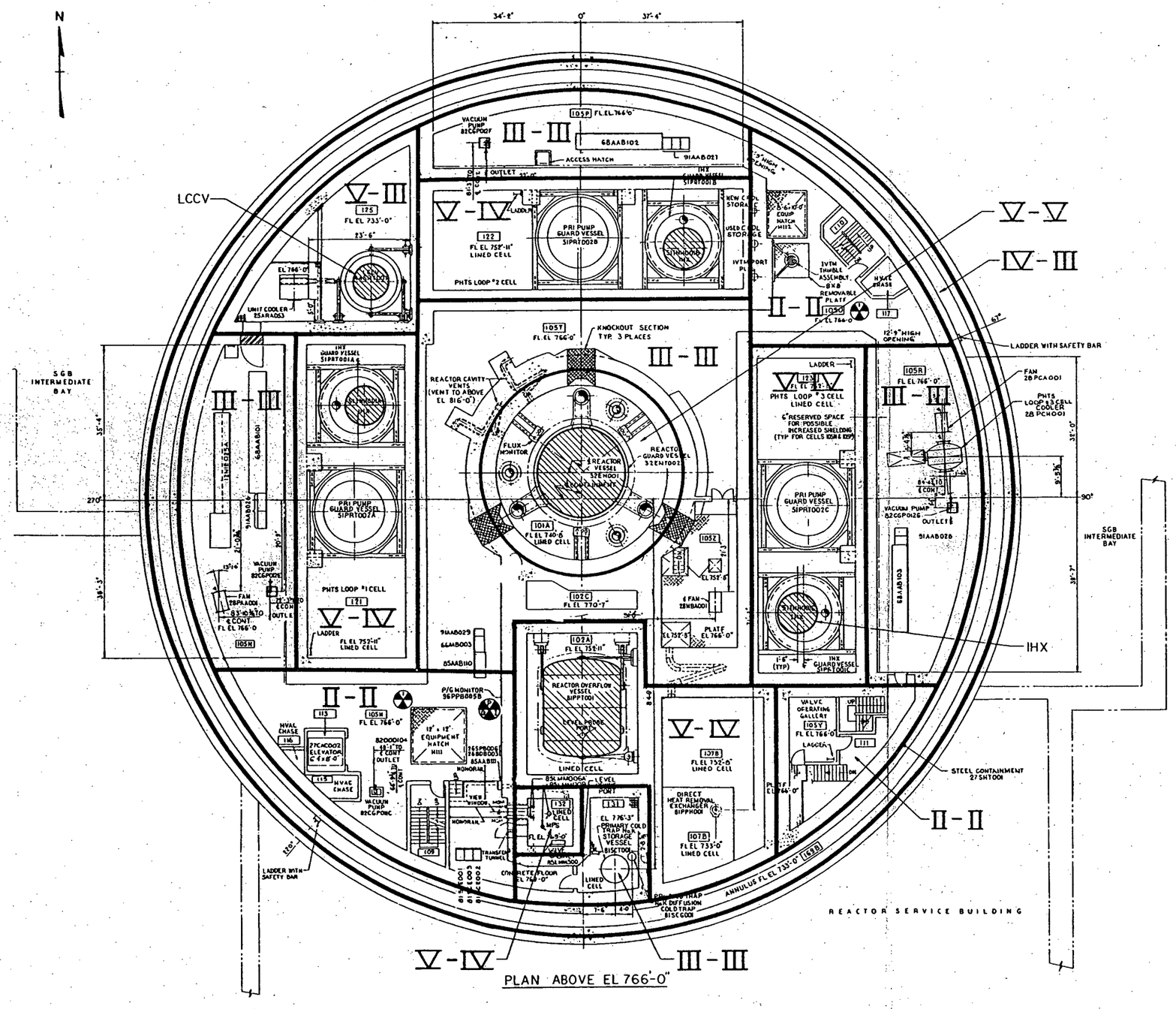

REFERENCE DRAWINGS
SEE DRAWING NN7359

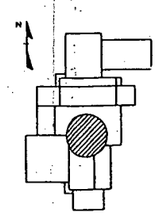

KEY PLAN

Figure 12.1-5 Plant Radiation Protection

Amend. 72
Oct. 1982

NN7403-2

GENERAL NOTES
SEE DRAWING NN7399

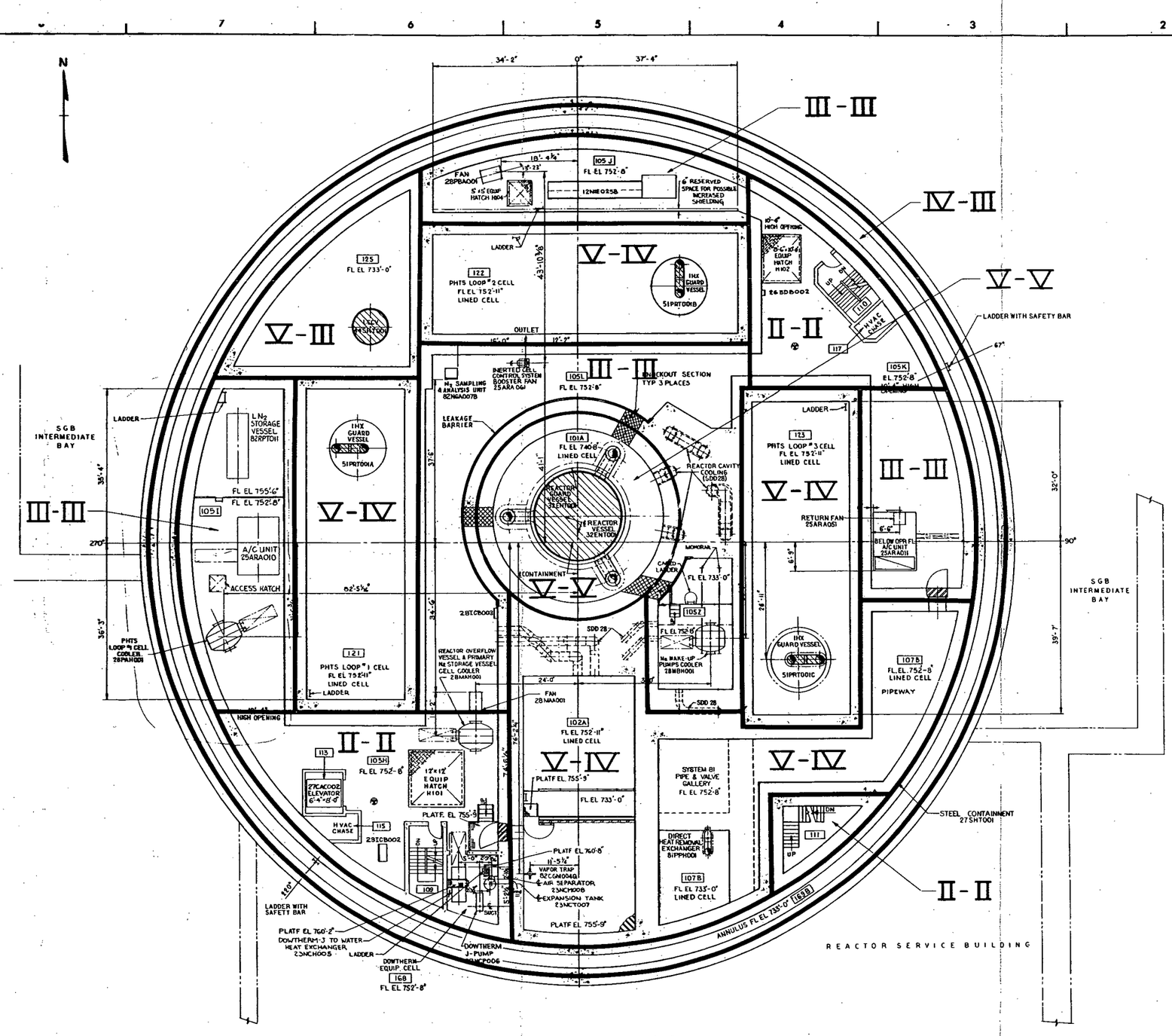

PLAN ABOVE EL 752'-8"

REFERENCE DRAWINGS
SEE DRAWING NN7399

GRAPHIC SCALE

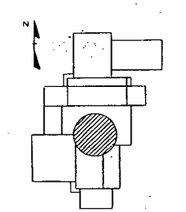

KEY PLAN

Figure 12.1-6 Plant Radiation Protection

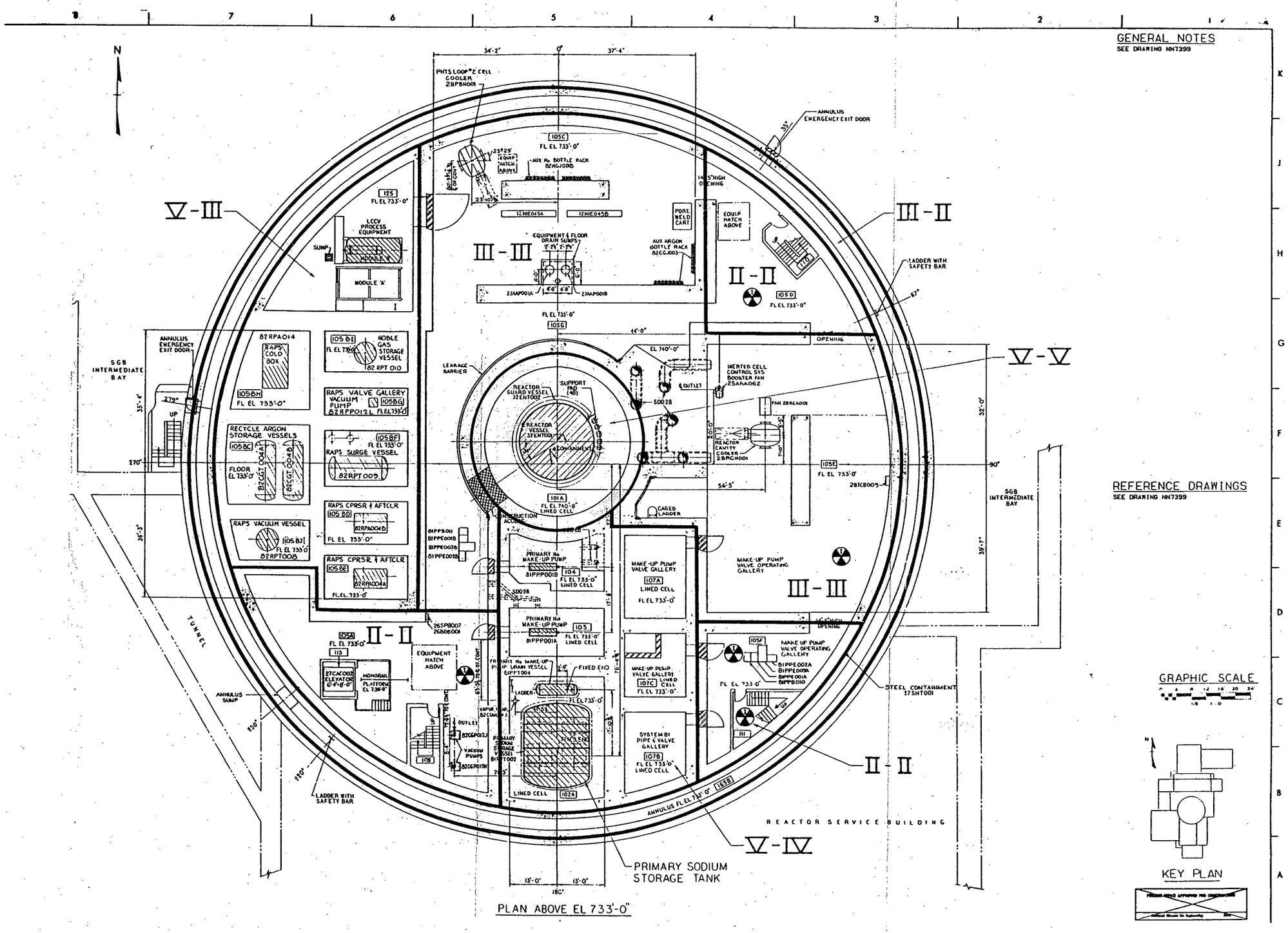

Figure 12.1-7 Plant Radiation Protection

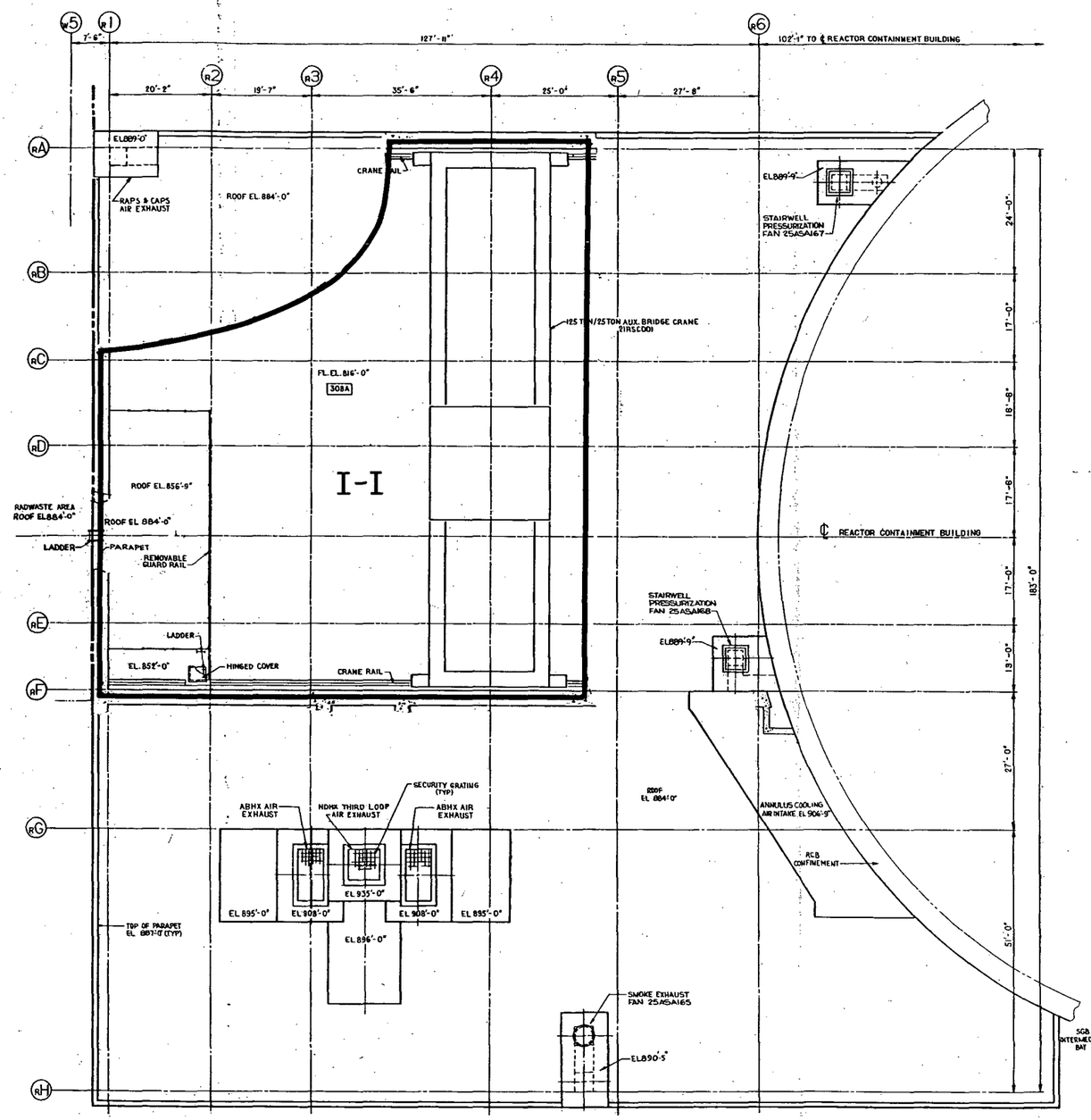

PLAN ABOVE EL. 858'-0"

GENERAL NOTES

1. THE FIRST RADIATION ZONE DESIGNATION REFERS TO THE RADIATION LEVEL IN A CELL WHILE OPERATING. THE SECOND DESIGNATION DURING CELL SHUTDOWN. THE SHUTDOWN CONDITION REQUIRES THAT THE PIPE AND/OR EQUIPMENT IN A CELL BE DRAINED, PURGED OR VOIDED OF RADIOACTIVE SOURCES AS NECESSARY. RADIATION SOURCES INTERNAL AND EXTERNAL TO A CELL ARE CONSIDERED

2. PLANT RADIATION ZONE CLASSIFICATION

ZONE CLASS	DESIGN DOSE RATE RANGE (MREM/HR)	ZONE DESCRIPTION	DESIGN OCCUPANCY CRITERIA
I	≤ 0.2	RESTRICTED AREA ROUTINELY OCCUPIED	FULL TIME
II	> 0.2 TO ≤ 5	RESTRICTED AREA NOT ROUTINELY OCCUPIED	10CFR20
III	> 5 TO ≤ 100	RADIATION AREA LIMITED ACCESS FOR ROUTINE TASKS	10CFR20
IV	> 100 TO ≤ 5000	HIGH RADIATION AREA ACCESS TO PERFORM SPECIFIC NON-ROUTINE TASK	10CFR20
V	> 5000	INACCESSIBLE	10CFR20

3. THESE RADIATION ZONE DRAWINGS ARE TO BE USED ONLY FOR RADIATION ZONE INFORMATION.

REFERENCE DRAWINGS

NN7460 - DESIGN RADIATION DOSE RATES RSB PLAN ABOVE EL 816'-0"

NN7461 - DESIGN RADIATION DOSE RATES RSB PLAN ABOVE EL 792'-0"

NN7462 - DESIGN RADIATION DOSE RATES RSB PLAN ABOVE EL 779'-0"

NN7463 - DESIGN RADIATION DOSE RATES RSB PLAN ABOVE EL 755'-0"

NN7464 - DESIGN RADIATION DOSE RATES RSB PLAN ABOVE EL 749'-0"

NN7465 - DESIGN RADIATION DOSE RATES RSB PLAN ABOVE EL 733'-0"

LEGEND

- E&C CABINET (HEAVY LINE FRONT)
- HIGH DENSITY CONCRETE
- KNOCKOUT SECTION
- STEEL
- ORDINARY CONCRETE
- CHECKERED PLATE
- GRATING
- 301 CELL NUMBER
- CONCRETE BLOCK
- 200 DOOR NUMBER

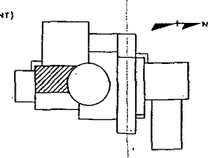

KEY PLAN

Figure 12.1-8 Plant Radiation Protection

Amend. 49
April 1979

NN7459-0

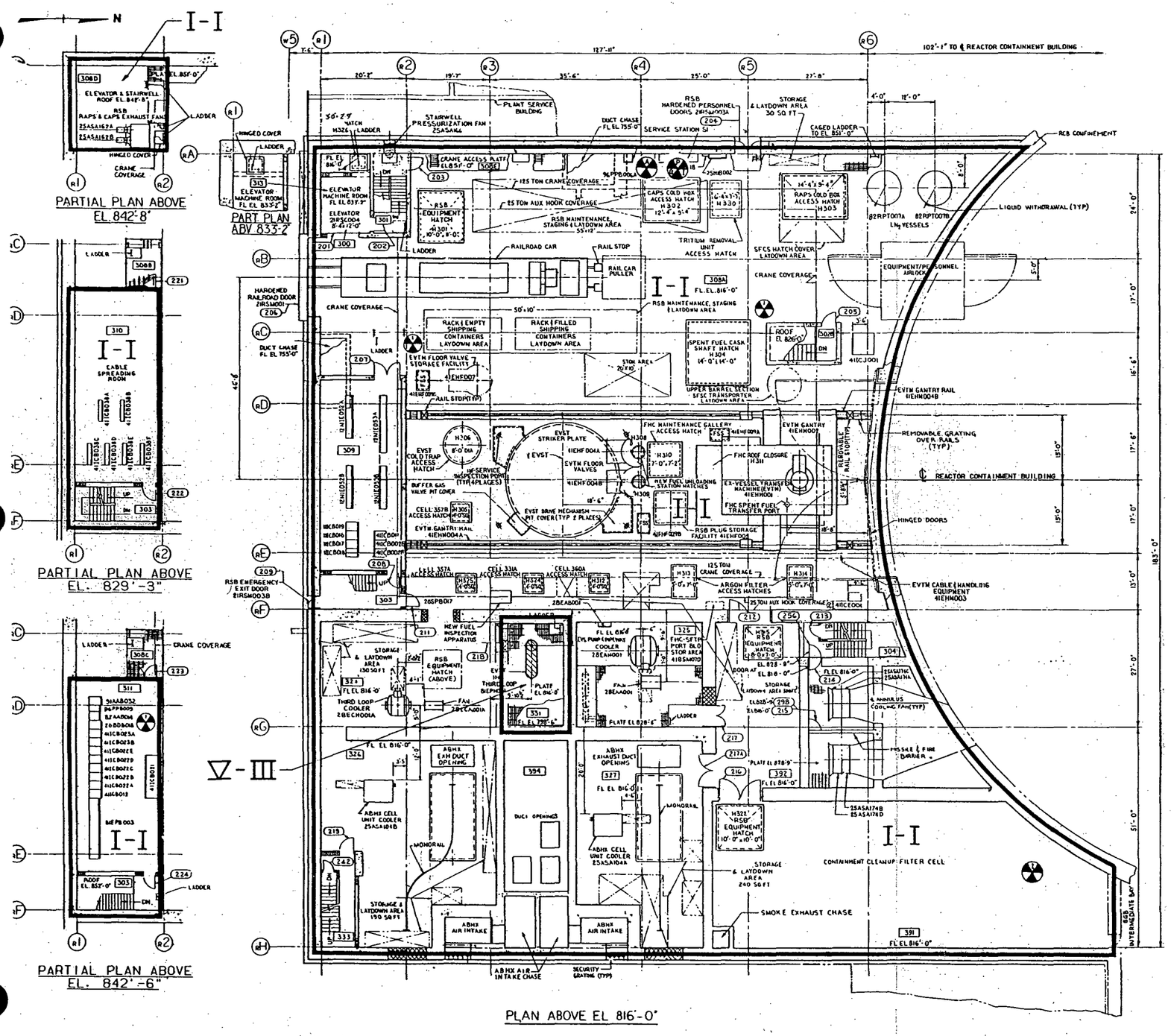

REFERENCE DRAWINGS
SEE DRAWING NN7459

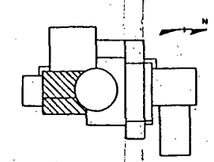

KEY PLAN

Figure 12.1-9 Plant Radiation Protection

NN7460-1

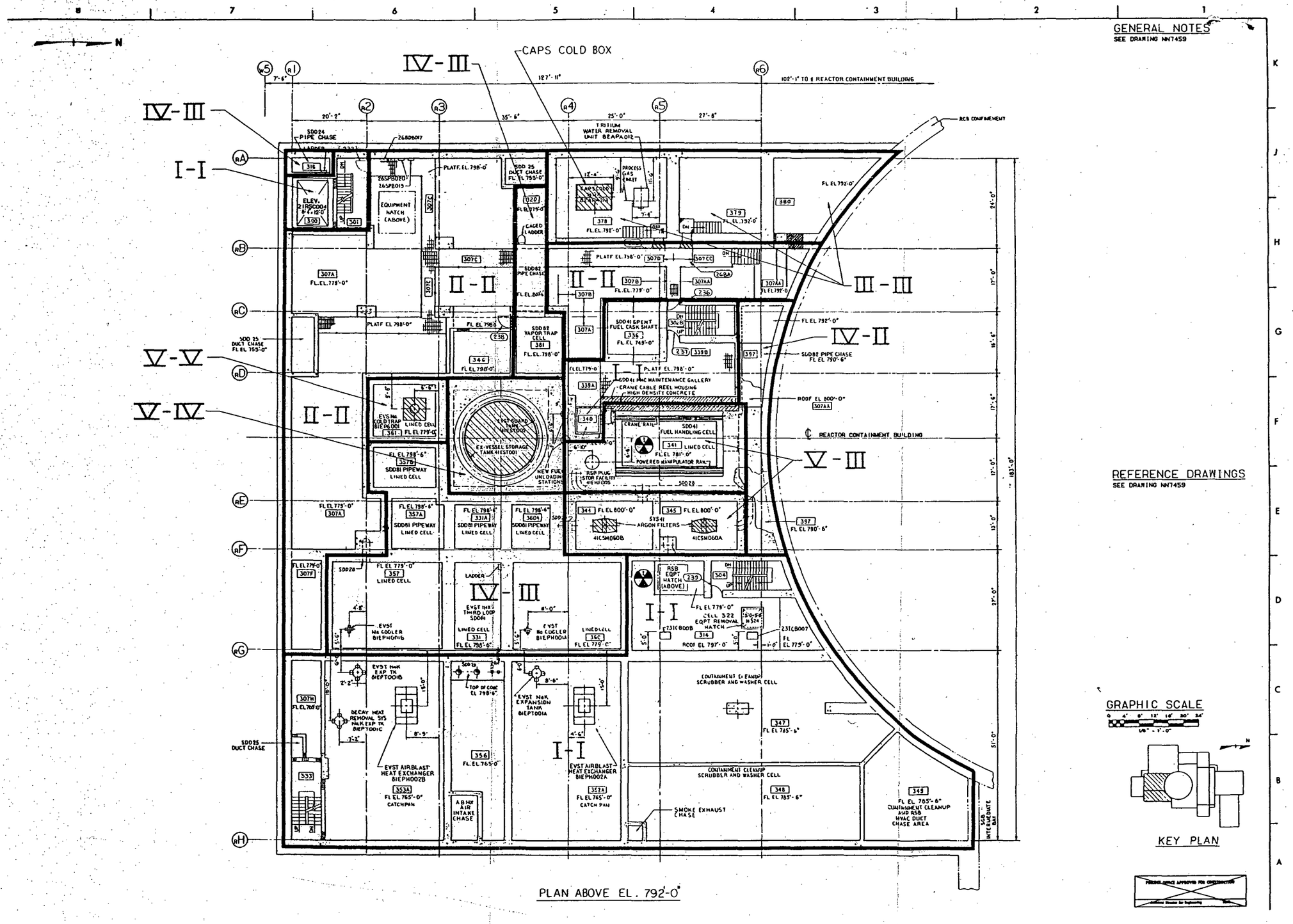

Figure 12.1-10 Plant Radiation Protection

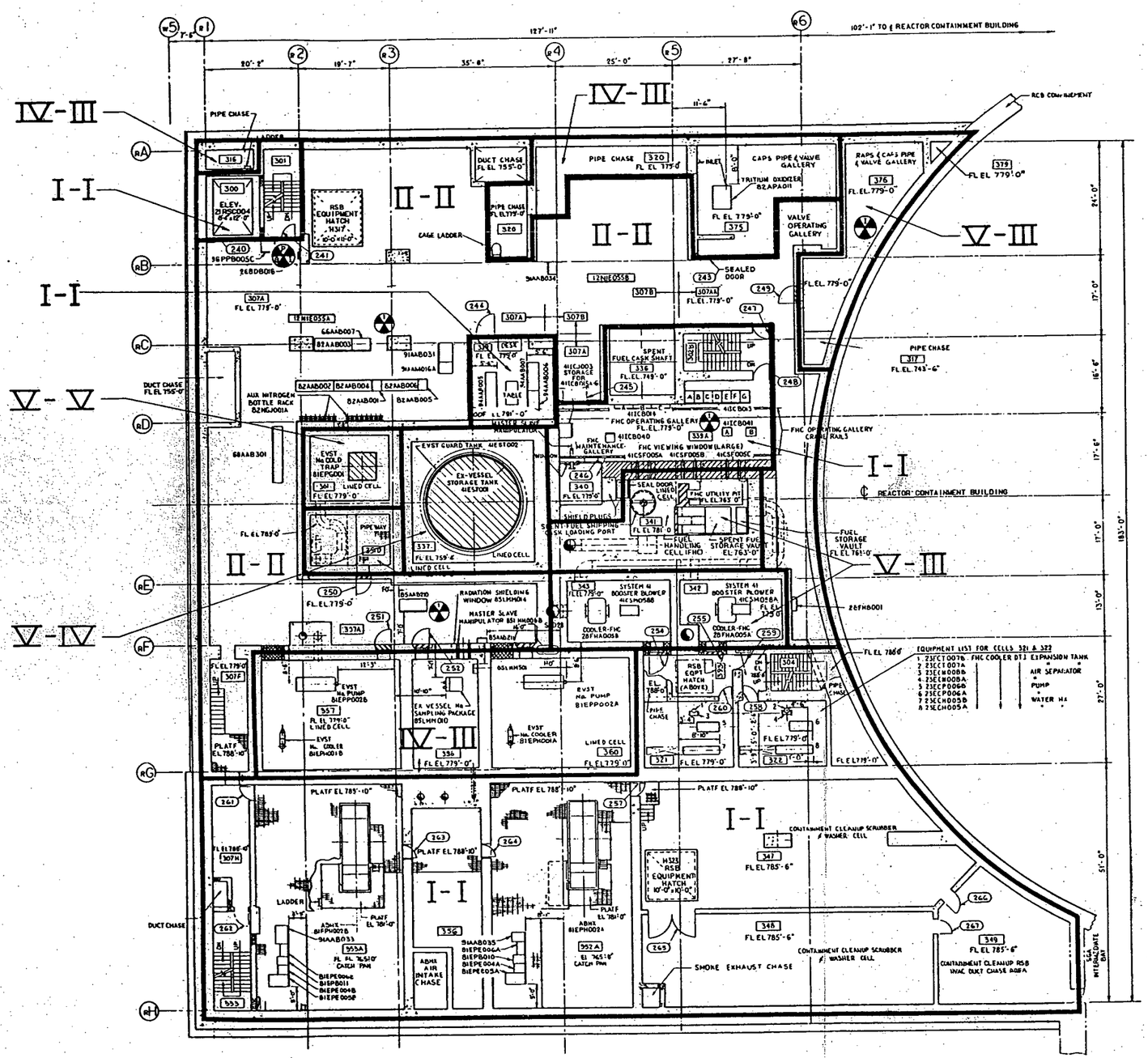

PLAN ABOVE EL. 779'-0"

REFERENCE DRAWINGS
SEE DRAWING NN7459

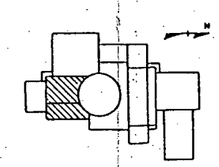

KEY PLAN

Figure 12.1-11 Plant Radiation Protection

Amend. 72
Oct. 1982

NN7462-2

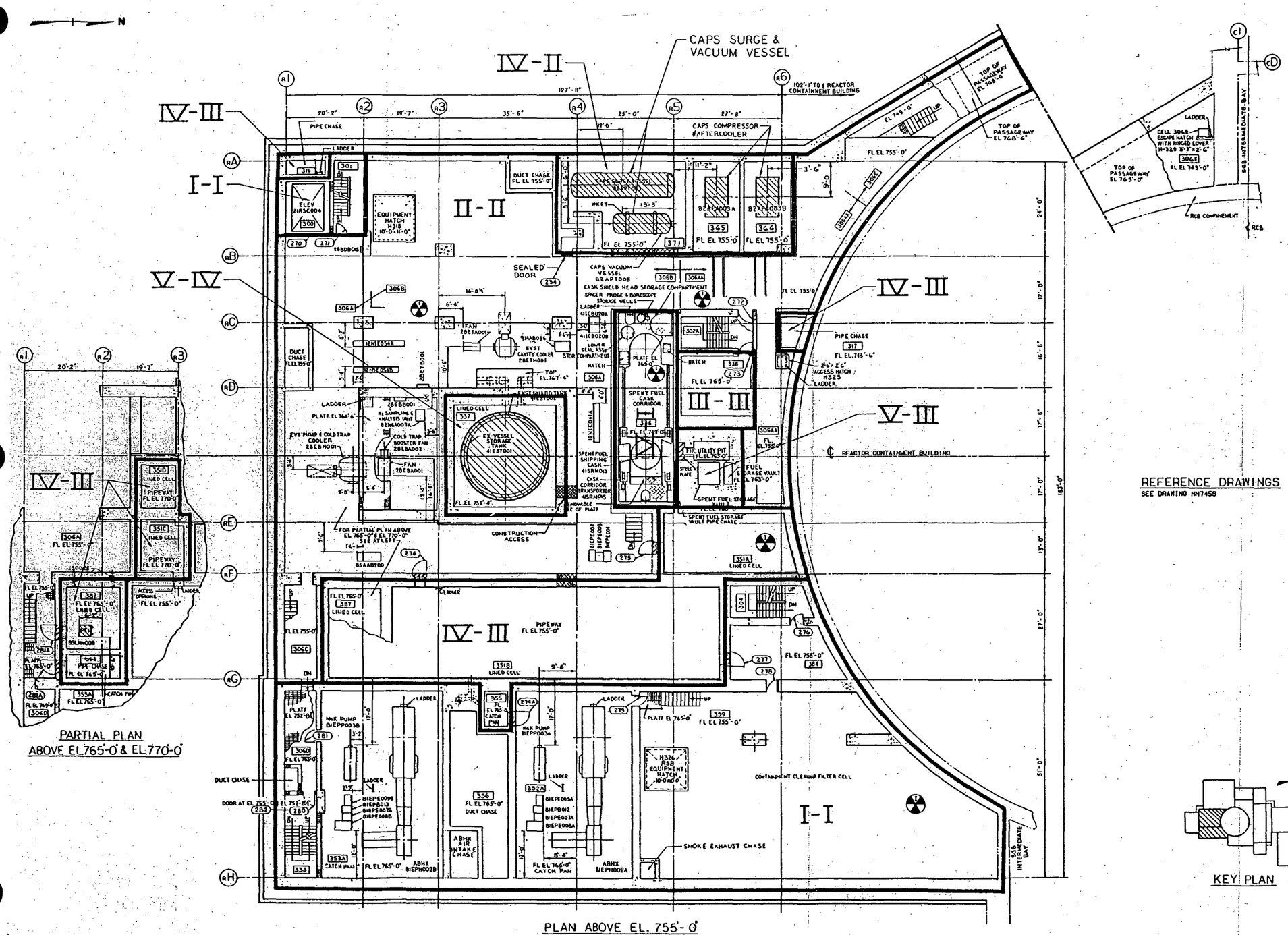

Figure 12.1-12 Plant Radiation Protectio

NN7463-1

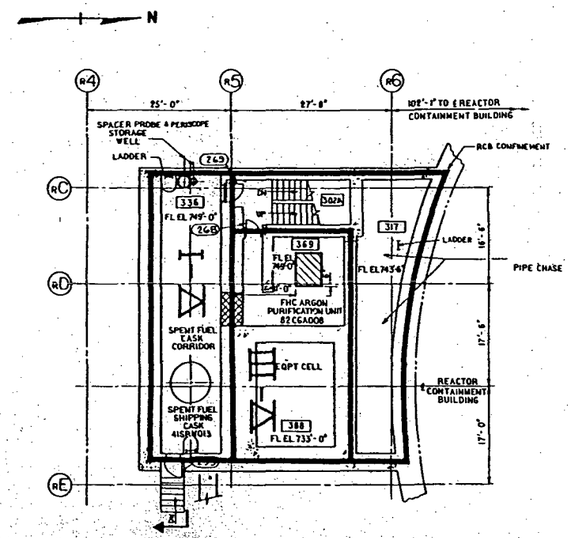

PARTIAL PLAN ABOVE EL.749'-0"

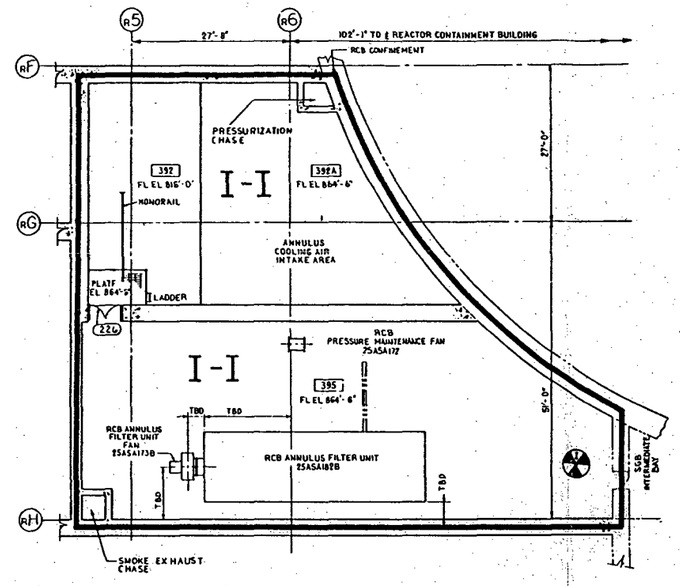

PARTIAL PLAN ABOVE EL.864'-6"

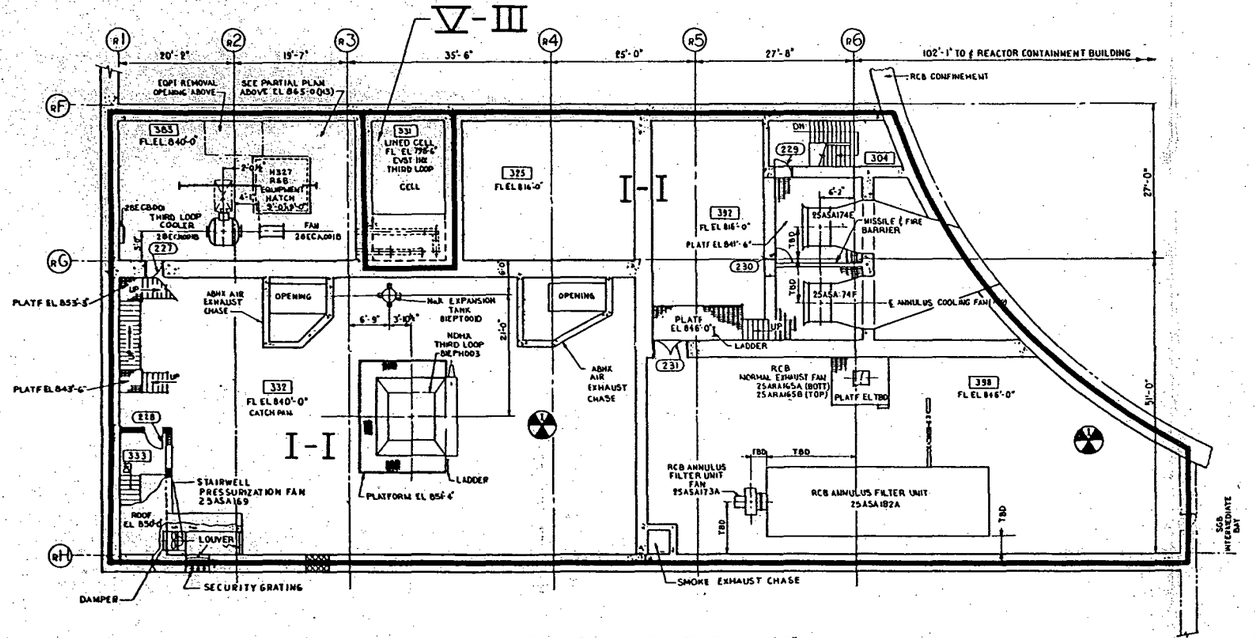

PARTIAL PLAN ABOVE EL.840'-0"

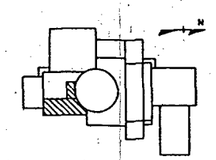

KEY PLAN

Figure 12.1-13 Plant Radiation Protectio

NN7464-1

Amend. 72
Oct. 1982

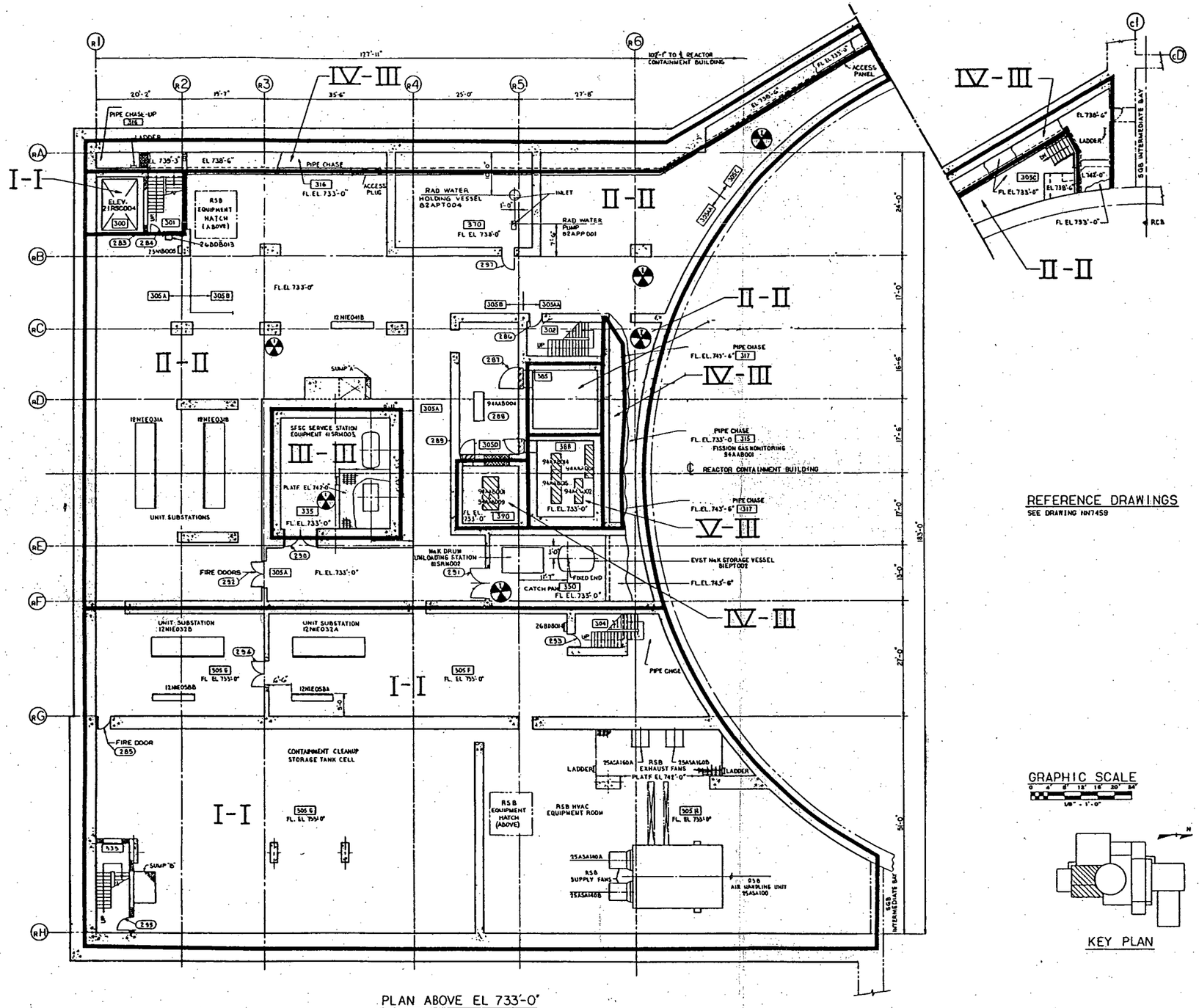

PLAN ABOVE EL 733'-0"

REFERENCE DRAWINGS
SEE DRAWING NN7459

GRAPHIC SCALE

KEY PLAN

Figure 12.1-14 Plant Radiation Protection

Amend. 72
Oct. 1982

NN7465-2

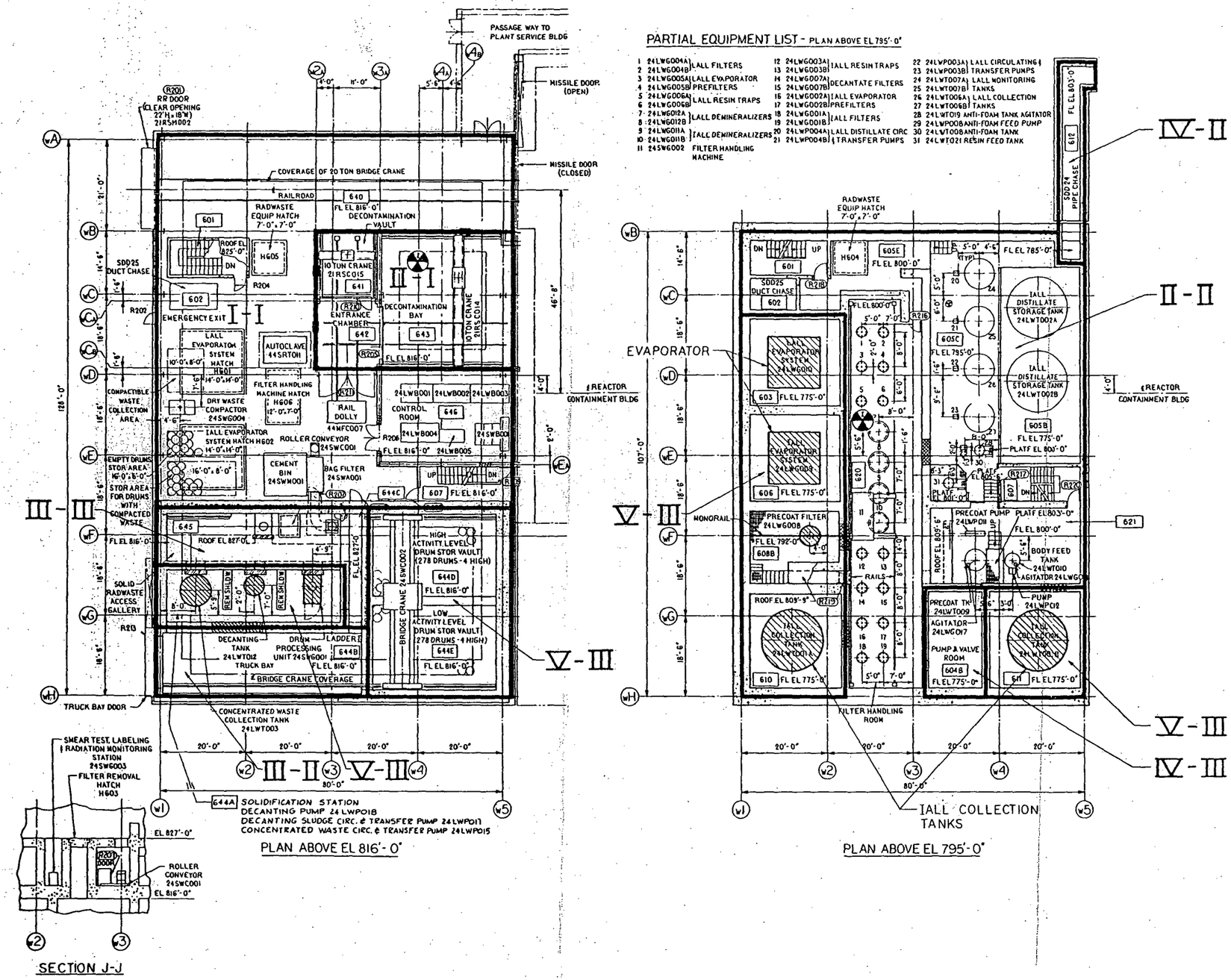

Figure 12.1-16 Plant Radiation Protection

NN7471-2

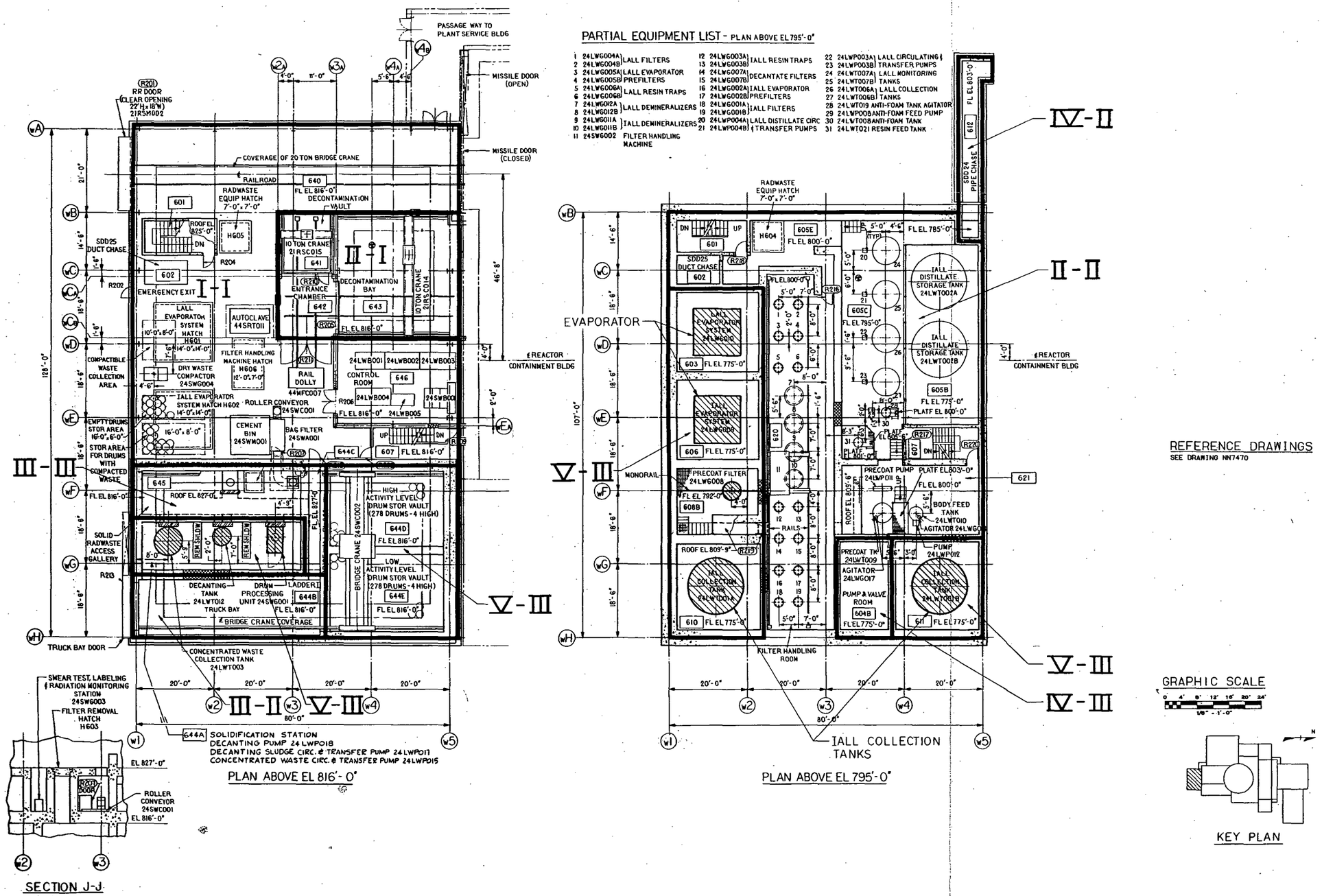

Figure 12.1-16 Plant Radiation Protection

NN7471-2

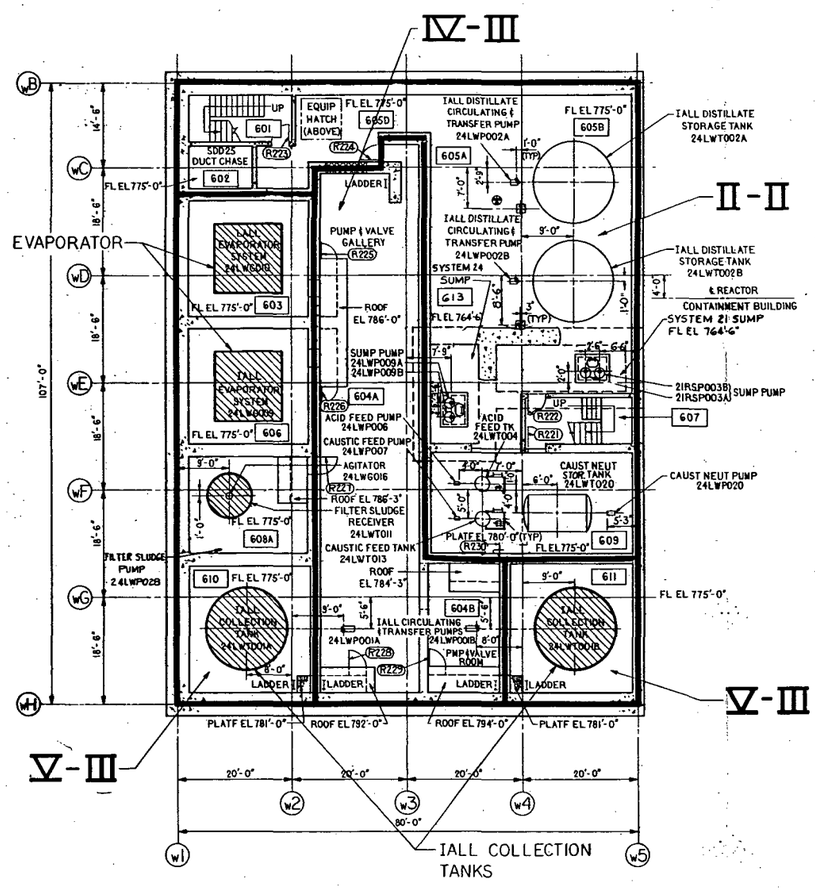

PLAN ABOVE EL 775'-0"

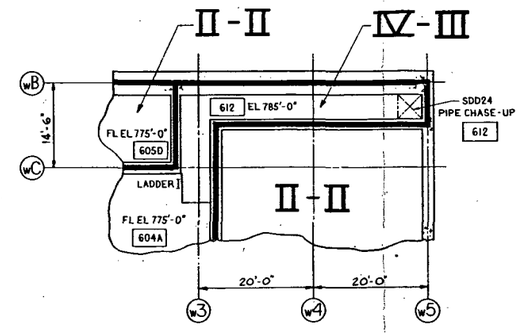

PARTIAL PLAN ABOVE EL785-0"

REFERENCE DRAWINGS
SEE DRAWING NN7470

GRAPHIC SCALE

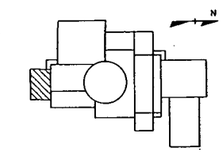

KEY PLAN

NN7472-1

Figure 12.1-17 Plant Radiation Protection

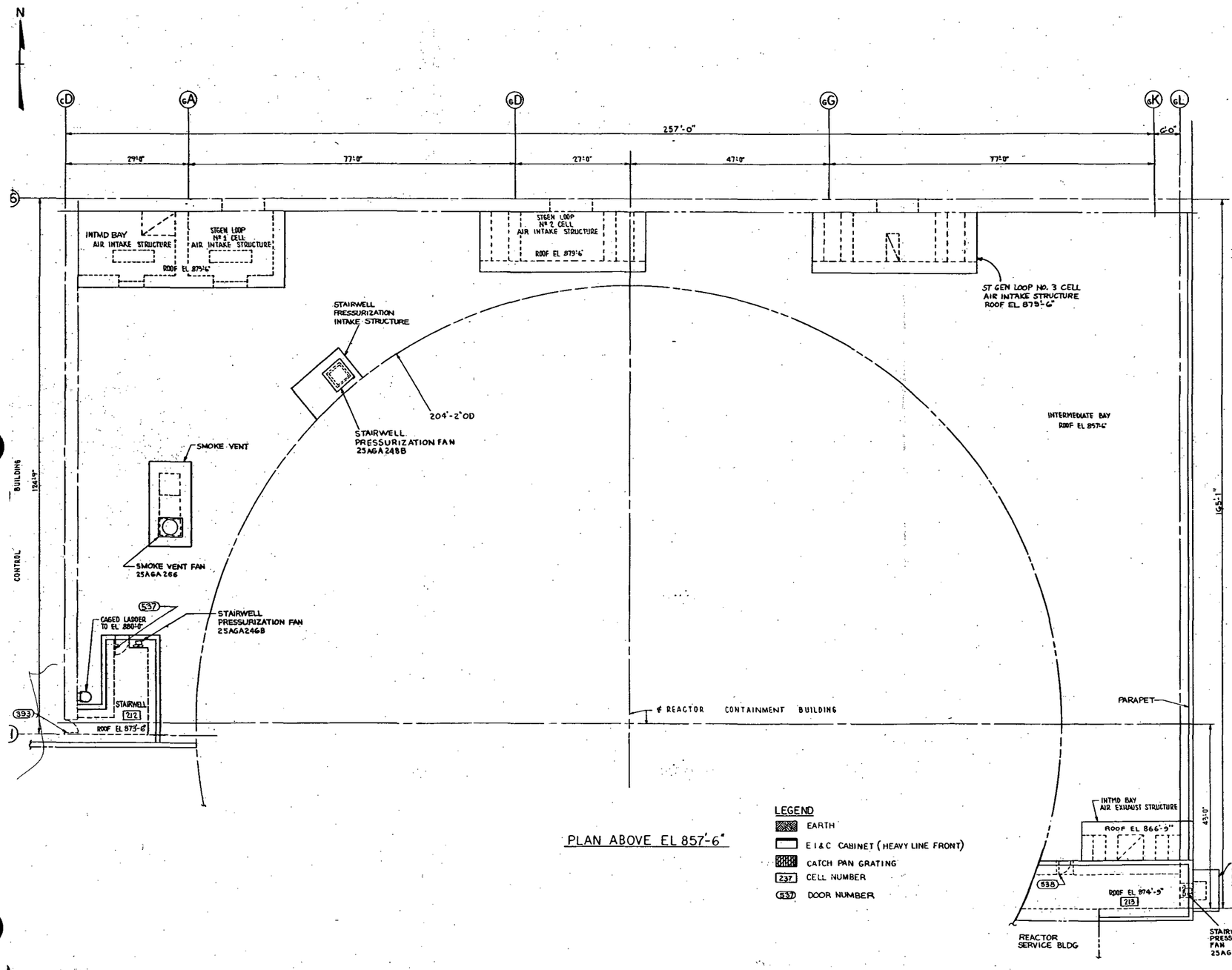

PLAN ABOVE EL 857'-6"

GENERAL NOTES

1. THE FIRST RADIATION ZONE DESIGNATION REFERS TO THE RADIATION LEVEL IN A CELL WHILE OPERATING. THE SECOND DESIGNATION DURING CELL SHUTDOWN. THE SHUTDOWN CONDITION REQUIRES THAT THE PIPE AND/OR EQUIPMENT IN A CELL BE DRAINED, PURGED OR VOIDED OF RADIOACTIVE SOURCES AS NECESSARY. RADIATION SOURCES INTERNAL AND EXTERNAL TO A CELL ARE CONSIDERED

2. PLANT RADIATION ZONE CLASSIFICATION

ZONE CLASS	DESIGN DOSE RATE RANGE (MREM/HR)	ZONE DESCRIPTION	DESIGN OCCUPANCY CRITERIA
I	≤ 0.2	RESTRICTED AREA ROUTINELY OCCUPIED	FULL TIME
II	> 0.2 TO ≤ 5	RESTRICTED AREA NOT ROUTINELY OCCUPIED	10CFR20
III	> 5 TO ≤ 100	RADIATION AREA LIMITED ACCESS FOR ROUTINE TASKS	10CFR20
IV	> 100 TO ≤ 5000	HIGH RADIATION AREA ACCESS TO PERFORM SPECIFIC NON-ROUTINE TASK	10CFR20
V	> 5000	INACCESSIBLE	10CFR20

3. THESE RADIATION ZONE DRAWINGS ARE TO BE USED ONLY FOR RADIATION ZONE INFORMATION.

REFERENCE DRAWINGS

NN7448- DESIGN RADIATION DOSE RATES SGB PLAN ABOVE EL 838'-0"

NN7449- DESIGN RADIATION DOSE RATES SGB PLAN ABOVE EL 816'-0"

NN7450- DESIGN RADIATION DOSE RATES SGB PLAN ABOVE EL 794'-0"

NN7451- DESIGN RADIATION DOSE RATES SGB PLAN ABOVE EL 765'-0"

NN7452- DESIGN RADIATION DOSE RATES SGB PLAN ABOVE EL 733'-0"

Figure 12.1-18 Plant Radiation Protection

NN7447-0

Amend. 49
April 1979

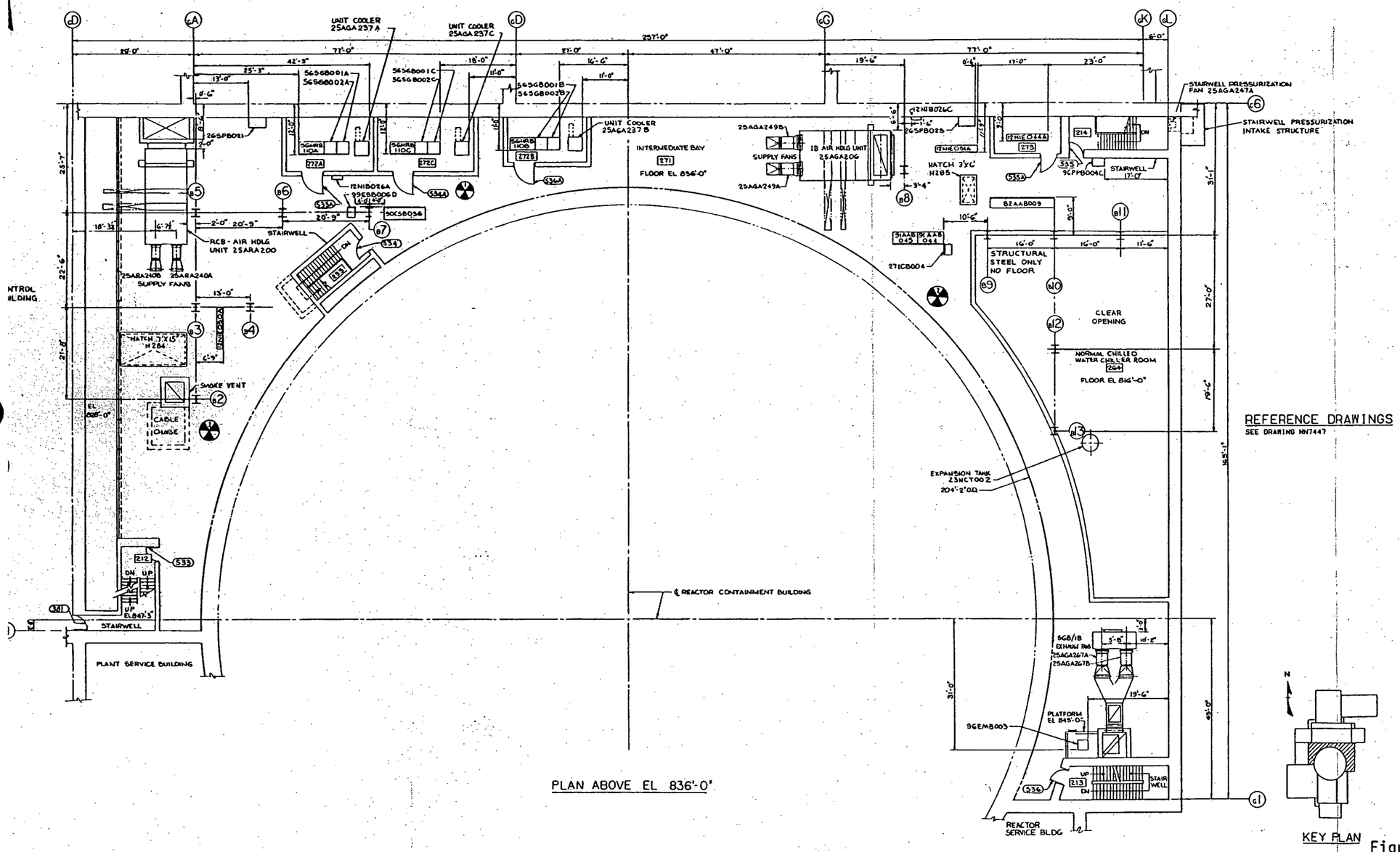

PLAN ABOVE EL 836'-0"

REFERENCE DRAWINGS
SEE DRAWING NN7447

Figure 12.1-19 Plant Radiation Protection

Amend. 72
Oct. 1982

NN7448-0

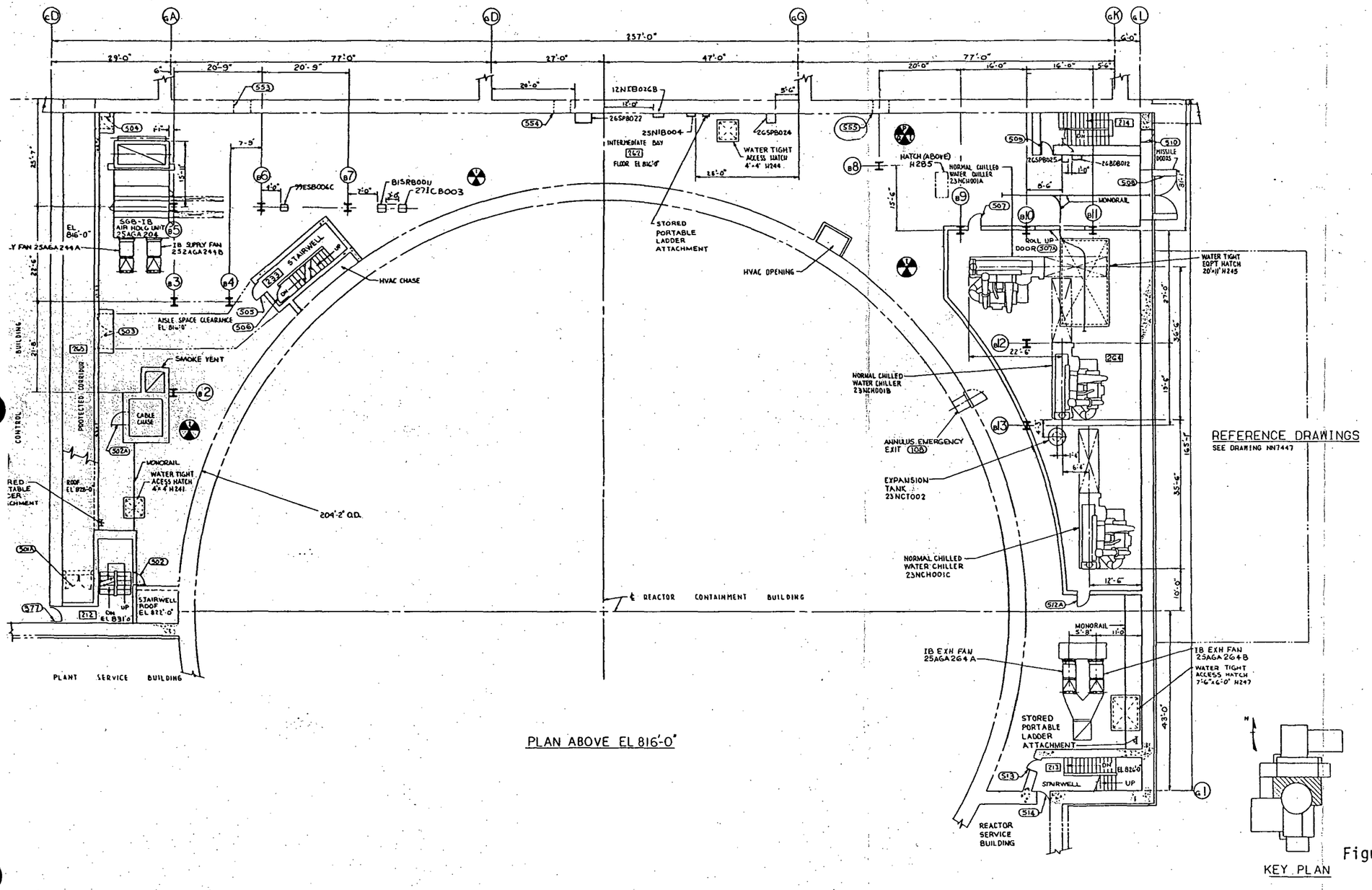

PLAN ABOVE EL 816'-0"

Figure 12.1-19a Plant Radiation Protection

NN7449-0

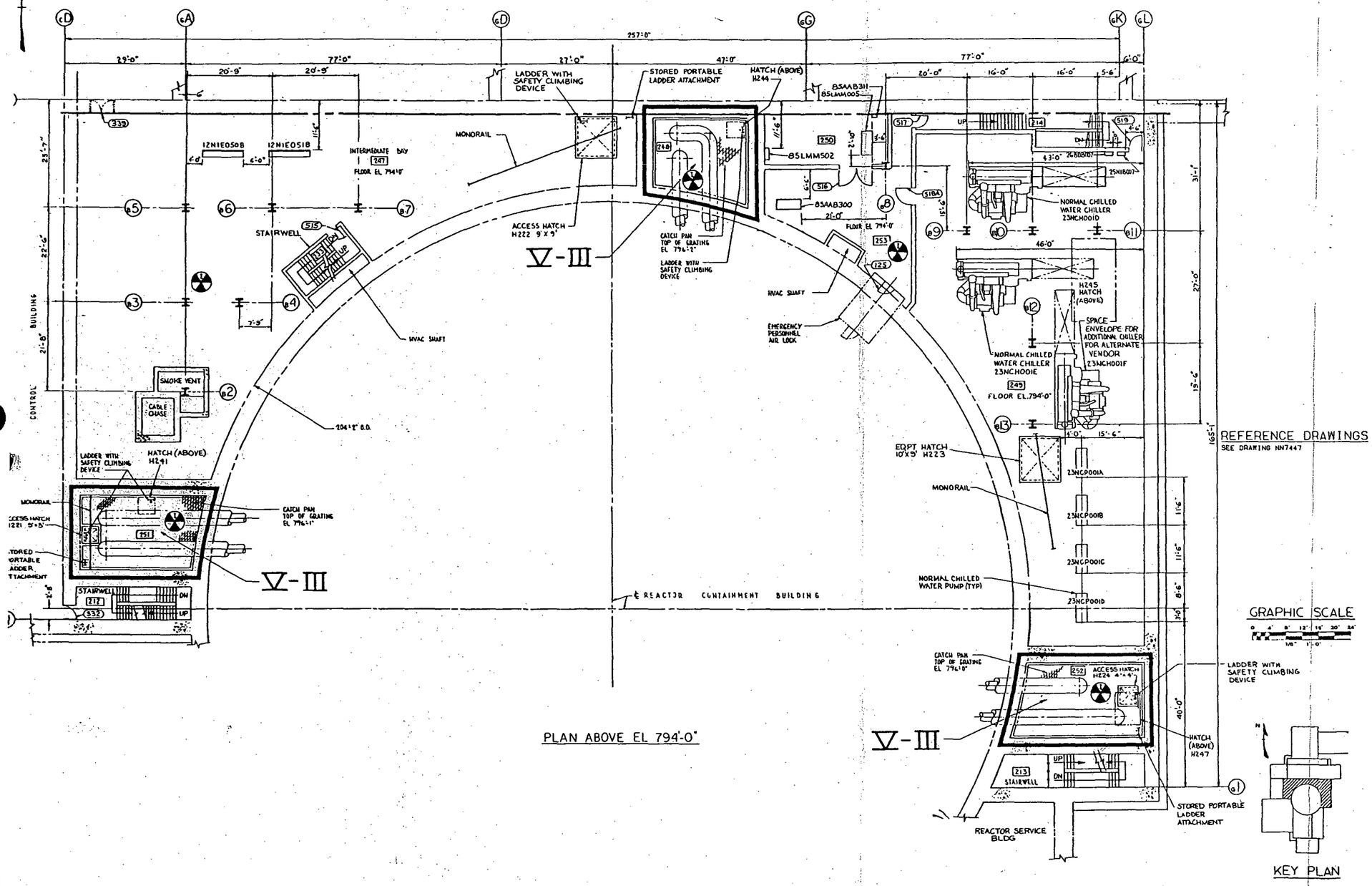

PLAN ABOVE EL 794'-0"

Figure 12.1-19b Plant Radiation Protection

NN7450-1

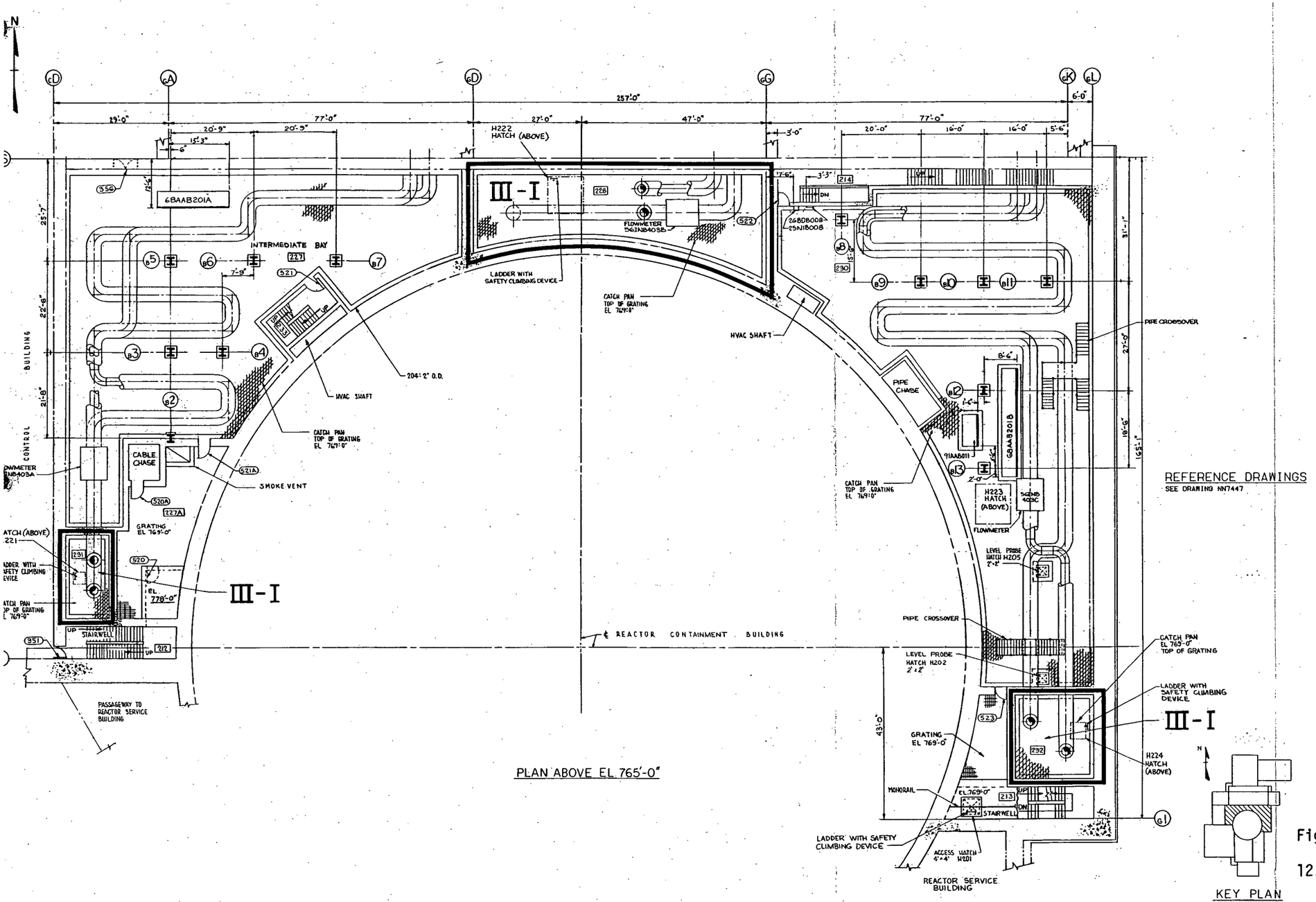

REFERENCE DRAWINGS
SEE DRAWING NN7447

PLAN ABOVE EL 765'-0"

Figure 12.1-19c Plant Radiation Protection

12.1-99c

Amend. 49
April 1979

NN7451-1

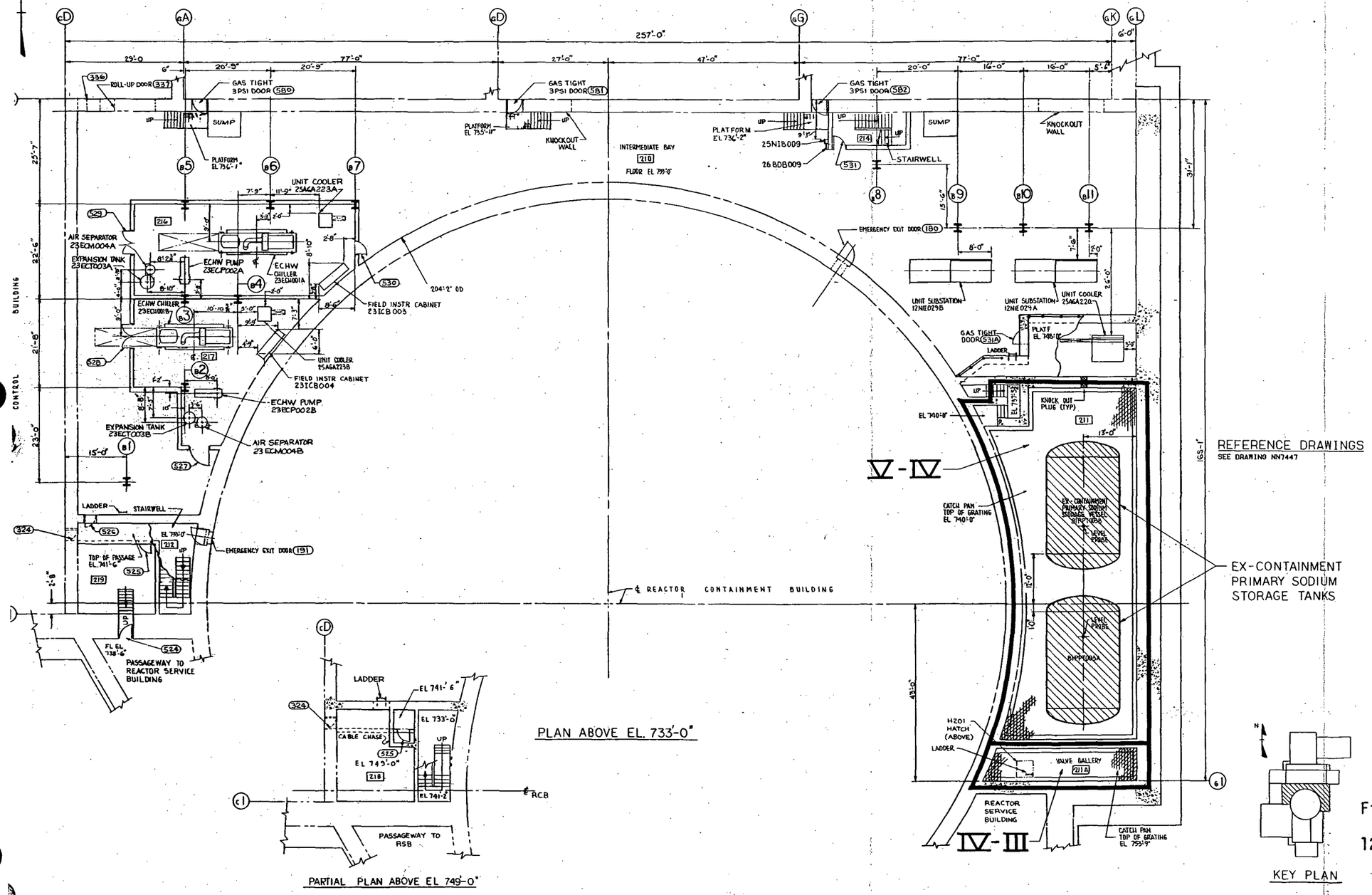

Figure 12.1-19d Plant Radiation Protection

12.1-99d

Amend. 49
April 197

NN7452-1

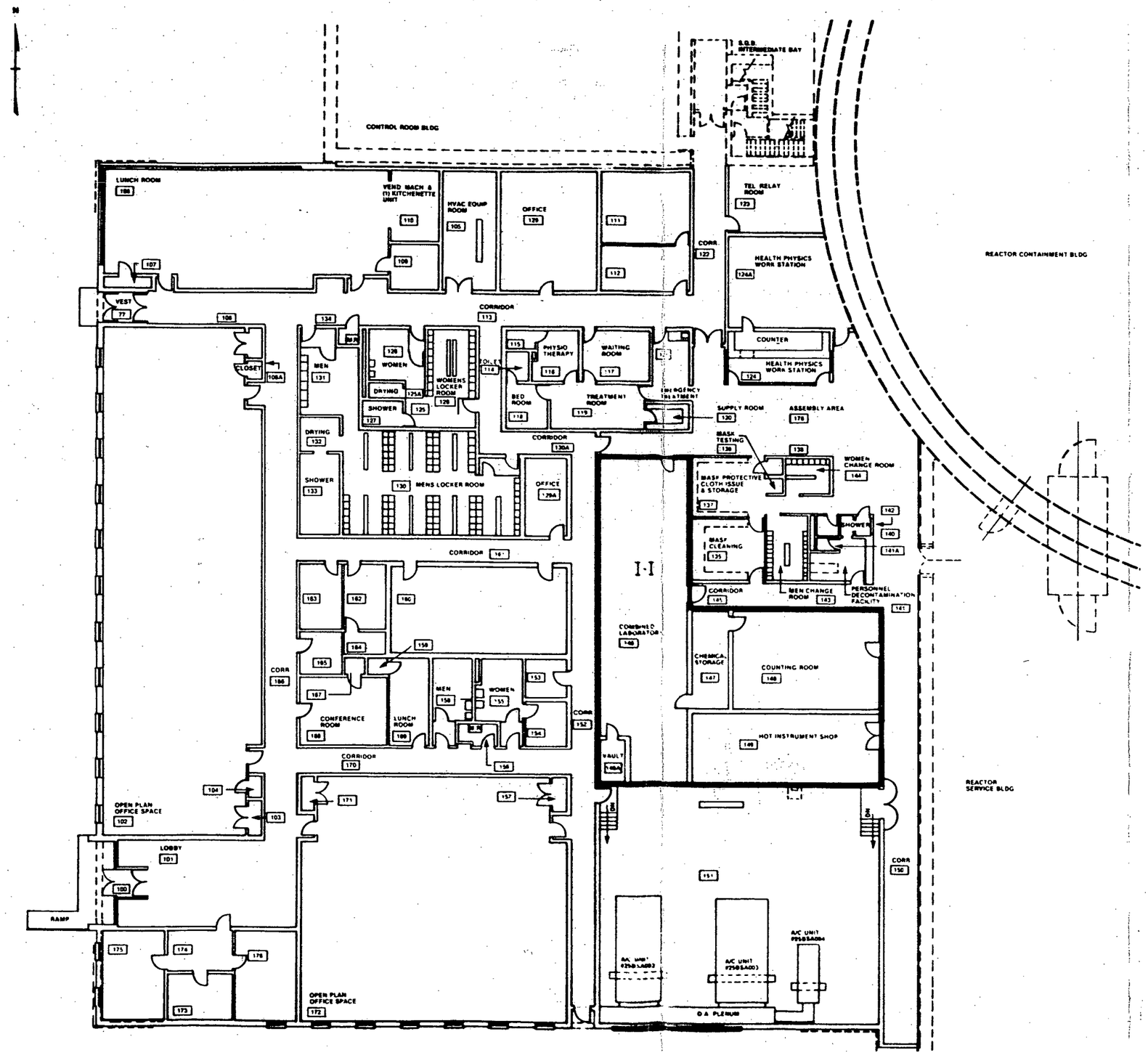

Figure 12.1-19e
Radiation Zoning of Cells and
Areas (PSB-Plan Above El. 816'-0")

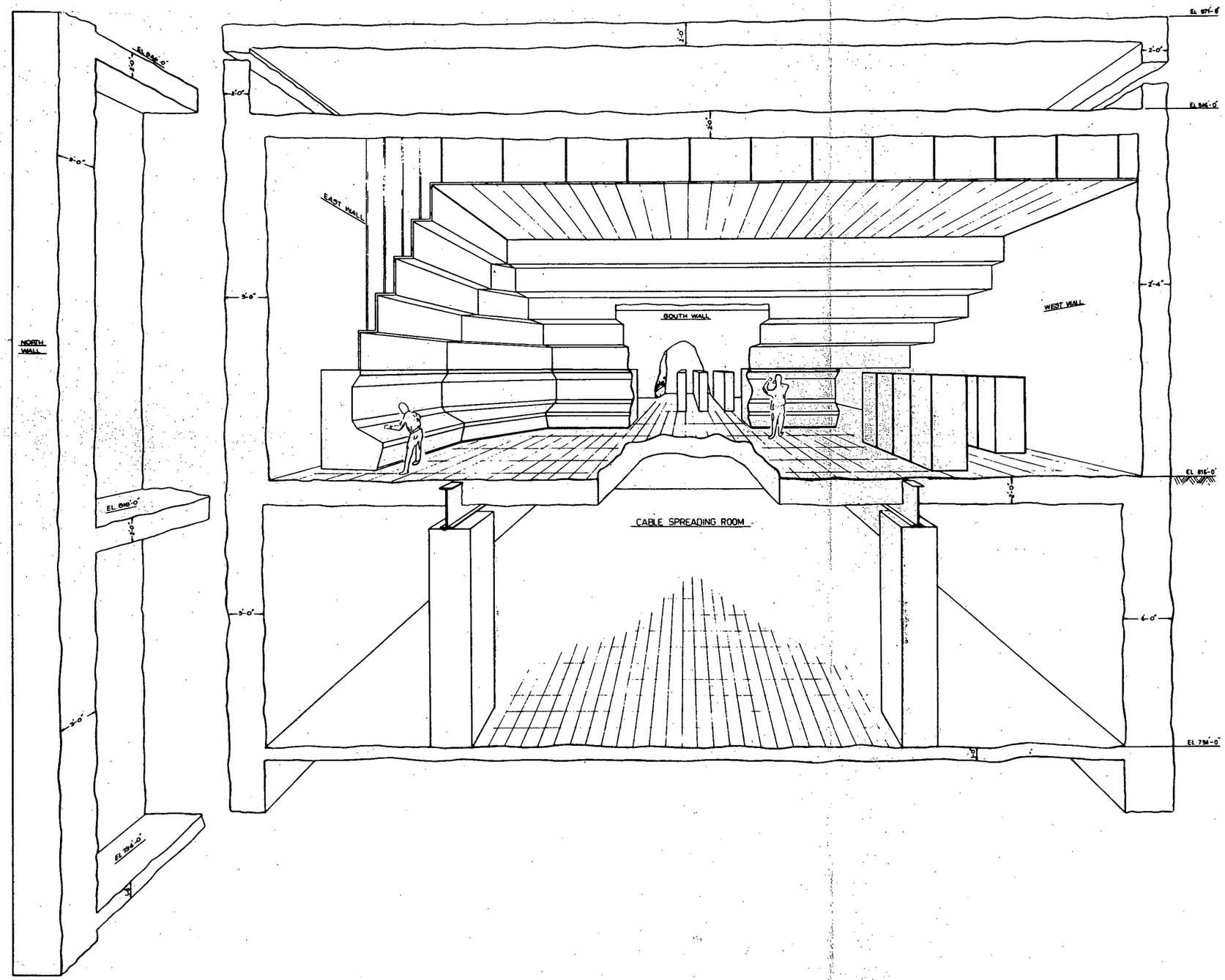

Figure 12.1-20
Control Room Shielding Perspective

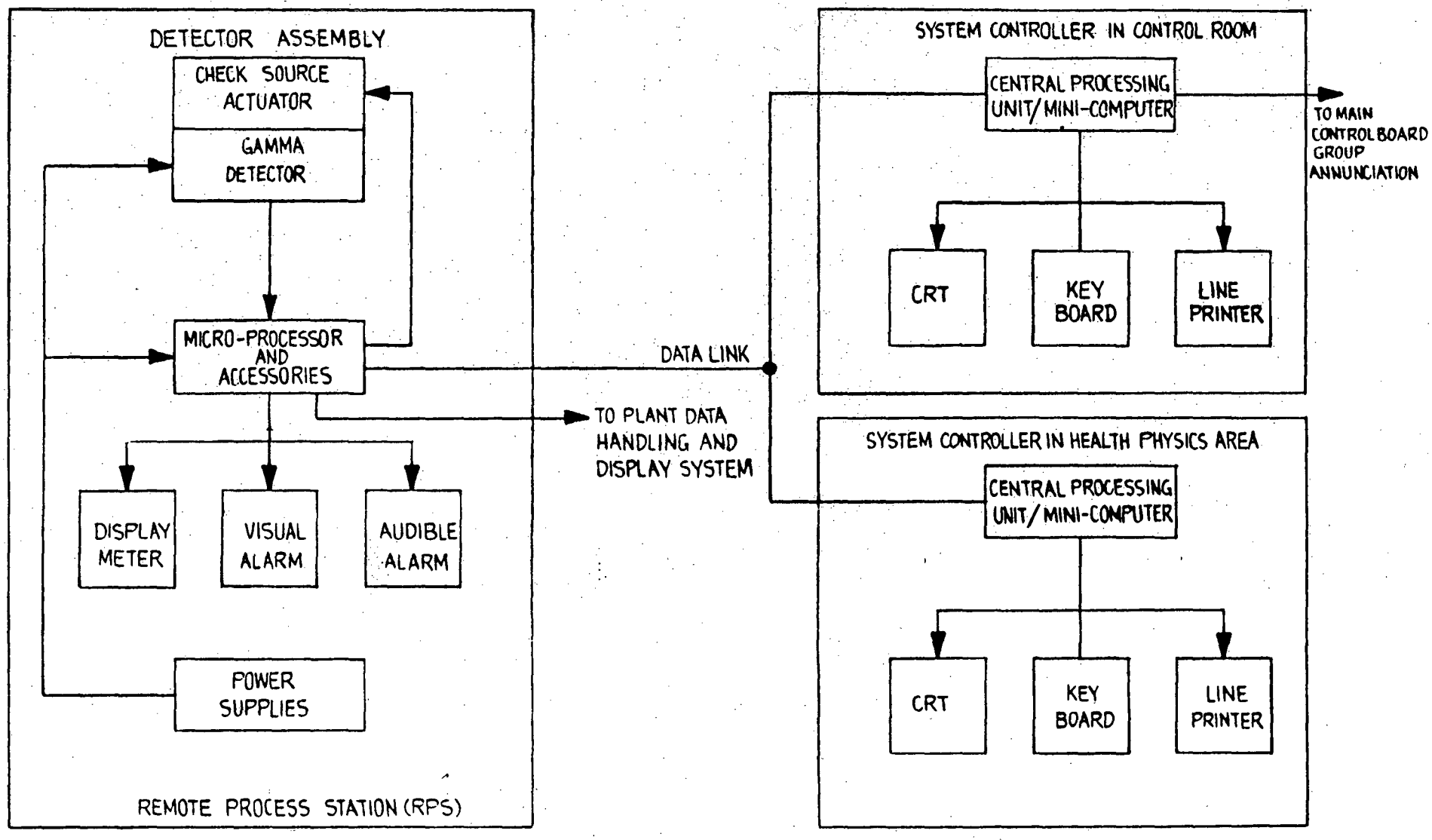

FIGURE 12·1-21 FUNCTIONAL BLOCK DIAGRAM OF AN AREA RADIATION MONITOR

Appendix to Section 12.1

Analytical Techniques, Basic Nuclear Data, Design Verification and Testing Used for Shielding Calculations

Calculations to determine the shielding thickness requirements for the reactor enclosure system use computer codes employing detailed models which mockup the significant three-dimensional aspects of the configuration. The full power operating condition calculations use multigroup neutron and gamma cross sections to represent the particle energy distribution of the spatial neutron and gamma flux distributions. A combination of neutron and gamma group structures ranging from 26 to 51 neutron groups and 13 to 25 gamma groups have been used in various stages of design analysis. The neutron and gamma sources considered in the shielding calculations of the reactor enclosure system are the neutrons associated with neutron fission, spontaneous fission, and (α, n) reactions with the oxygen of the oxide fuel.

Gamma sources consider the principal neutron reactions of neutron radioactive capture, neutron inelastic scatter, neutron induced fission, and neutron activation. The calculation of the multigroup neutron and gamma flux distributions employ one- and two-dimensional discrete ordinates transport theory and diffusion theory (ANISN or ANISN-W, DOTIIIW or DOTIII) computer codes. The neutron and gamma source distributions derived from the neutron flux distributions and reaction cross sections or neutron or gamma surface leakages are employed in point kernel (SCAP-W,
49 44 SCAP-BR) computer codes which mockup the three-dimensional aspects of radiation streaming geometries associated with penetrations and gaps.

Radiation analysis and shield design for the closure head
49 penetrations are calculated using the point kernel (SCAP-W, SCAP-BR)
44 and discrete ordinates transport (DOTIIIW, DOTIII) computer codes. The source terms for design of penetrations and required shielding are discussed in Section 12.1.3.

A flow chart illustrating the general use of computer codes and basic nuclear data in the CRBR shielding design is shown in Figure 12.1-A1 and the following discussion provides a description of codes and data.

Basic Nuclear Data

The basic nuclear data used in the shielding design has evolved from basic libraries defined for use in fast reactors to the use of evaluated nuclear data files, ENDF/B. Neutron cross section libraries employed in preliminary CRBR studies used theABBN (see Reference 1) 26-group library. Current design analyses use ENDF/B-II (Modified and ENDF/B-III data libraries). The ORNL supporting calculations have employed ENDF/B-III data libraries. Neutron cross section processing techniques to prepare multigroup cross sections are the XSRES-IDX technique as described in Section
44 4.3.3. Gamma cross section data libraries are prepared from ENDF/B-III data files or from the compilation of Reference 3.

Computer Code Descriptions

Computer codes used in CRBRP shielding analysis are present state-of-the-art codes developed or adapted to the LMFBR shielding design application. The codes used are:

44

ANISN-W
APPROPOS
DOTIIIW

44

GAMLEGW

LSD-2

ORIGEN
QAD
RIBD
SCAP
SCAP-BR
S-4M

TRIPLET
XSRES-WIDX

44

Abstracts of the codes are provided in Appendix A of this PSAR.

Design Verification and Testing

Verification of shield system performance, shielding design methodology and basic nuclear data is being carried out to support the CRBR shielding design. A series of experimental configurations simulating portions of LMFBR shield systems have been designed and experiments conducted. The principal experimental program has been conducted at Oak Ridge National Laboratory. A limited number of experiments related to shielding have been conducted in the Argonne National Laboratory experimental program supporting
44 the CRBRP nuclear design. This later program which provides data useful in evaluating neutron flux and gamma flux distributions in LMFBR's is described in Section 4.3.

In general, there are three types of experiments conducted to support shielding design. These are (1) experiments to measure the basic neutron and gamma attenuation characteristics of candidate materials for use in LMFBR shields, (2) experiments to parametrically define shield configuration and dimensional effects on shielding performance, and (3) prototypic or simulation experiments of portions of LMFBR shield systems. In addition to the above three types of experiments, measurements of neutron cross section data in the candidate LMFBR shield materials are conducted. The LMFBR shielding experimental program has progressed from the experiments defined to support the FFTF
44 design to experiments to support CRBRP design. The scope of experimental

programs conducted on FFTF shielding have provided a sound base of experimental data for method and nuclear data verification. The FFTF experiments were conducted in 1969 through 1973, LMFBR shielding experiments were initiated in 1973 with emphasis on CRBR shielding beginning in 1974.

The ORNL shielding experimental program is conducted at the ORNL Tower Shielding Facility. Experimental configurations employ a collimated beam of neutrons from the TSFR reactor configuration as an approximate planar source of neutrons incident on slab simulations of LMFBR shield systems. Simulations of experiments utilize either the bare beam or simulations of calculated neutron energy spectrum incident on the specific portion of the LMFBR shield system, e.g., at the reactor core/blanket interface. The design of spectrum modifiers to simulate incident spectrum have been utilized extensively in the TSF programs.

Experiments related to CRBR shield design which were conducted in the FFTF program on the TSF were: (1) mockup experiments of the lower shield region of the fuel assemblies which included representation of the streaming paths between assemblies and through shield orifice holes, (2) mockup experiments of the reactor vessel closure assembly penetration gaps which included parametric investigation of offsets and gap widths for annular gaps and slits in iron, (3) deep penetration neutron attenuation experiments in sodium, carbon steel and stainless steel, (4) mockup experiments to define neutron streaming in the primary inlet and outlet piping penetrations of the reactor cavity wall, the isolation valve cell and the shield walls adjacent to the heat transport system (HTS) cells, and (5) mockup experiments of the reactor closure head and head compartment shield system to define neutron and gamma shield effectiveness. These experiments employed spectrum modifiers to obtain prototypic neutron spectra incident on shield systems. The CRBR shielding program has expanded from this original FFTF program to include a number of experiments simulating the material and laminar configurations of candidate LMFBR radial, upper axial and lower axial shields. Planned experiments will simulate principal shielding design problems and provide tests of calculation methods in prototypic shield configurations. The scope of the completed and planned experimental program to support CRBR shielding design is shown in Table 12.1.A1.

In addition to the extensive experimental program conducted at ORNL, an extensive program of experiment analysis is being conducted by ORNL and the reactor manufacturers. These programs are employed to test the methodology, basic nuclear data, and method application to design solutions of LMFBR shields. The experimental analysis program purpose is many-fold in that it has (1) provided guidance in experiment planning to insure adequate data to test methods and basic nuclear data, (2) provided guidance in planning shielding design method development required to perform the shielding design of LMFBR's, (3) provided the reactor manufacturers the vehicle to utilize and test the methodology prior to, or in parallel to, the design analysis, and (4) provided correlation of the design analysis of portions of the CRBR shield system to experiment and provided realistic estimates of the

uncertainties and experimental-to-calculated bias associated with the shield performance. The latter purpose provides for a sound basis of shield design in that the detailed design support calculations performed by the reactor manufacturers and the independent support calculations performed by ORNL utilize the techniques and methods demonstrated in the experiment analysis effort.

Results from the LMFBR experimental and experiment analysis programs have demonstrated the veracity of the analytical techniques and shield design methods. Detailed results and comparisons of these structures are documented in References 3 through 13.

References to Appendix to Section 12.1

1. L. P. Abagyan, N. O. Bazazyants, I. I. Bondarenko, and M. N. Nikolaev, "Group Constants for Nuclear Reactor Calculations," Consultants Bureau Enterprises, Inc., New York, New York, 1964.

2. E. Storm and H. I. Israel, "Photon Cross Sections from 0.001 to 100 Mev. for Elements 1 through 100", LA-3753, November, 1967.

3. ORNL-TM-3969, "The ORNL Benchmark Experiment for Neutron Transport in Thick Sodium."

4. ORNL-4892, "Final Report on a Benchmark Experiment for Neutron Transport Through Iron and Stainless Steel."

5. WARD-SS-3045-3, "Radial Blanket and Shield Simulation Experiments--Analysis of Experimental Results," Topical Report, R. Rittenberger, G. Gibson, J. Ritts, November, 1973.

6. ORNL-TM-4364, "Fast Reactor Experimental Shielding," Monthly Progress Report, July, 1973.

7. ORNL-TM-4420, "Fast Reactor Experimental Shielding," Monthly Progress Report, August and September, 1973.

8. ORNL-TM-4469, "Fast Reactor Experimental Shielding," Monthly Progress Report, October, 1973.

9. ORNL-TM-4514, "Fast Reactor Experimental Shielding," Monthly Progress Report, November and December, 1973.

10. ORNL-TM-4592, "Fast Reactor Experimental Shielding," Monthly Progress Report, January, 1974.

11. ORNL-TM-4611, "Fast Reactor Experimental Shielding," Monthly Progress Report, February, 1974.

12. ORNL-TM-4402, "Fast Reactor Experimental Shielding," Monthly Progress Report, July and August, 1973.

13. ORNL-TM-4482, "Fast Reactor Analytical Shielding," Monthly Progress Report, July and August, 1973.

TABLE 12.1-A1

EXPERIMENTAL PROGRAM RELATED TO CRBRP SHIELDING

Experiment	Sponsor*	Objective
Radial Blanket and Shield Simulation	LMFBR	Provide experimental verification of neutron flux attenuation through radial blanket and radial shield simulation*
Near Core Gamma	CRBR	Provide experimental verification of gamma heating rate distributions in (1) stainless steel and Inconel radial shield configurations and (2) at core-blanket and blanket-shield interfaces
Upper Axial Shield	CRBR	Provide experimental verification of neutron attenuation methods based on the CRBR reactor closure head simulation with sodium pool simulation
Reactor Vessel Support Area	CRBR	Provide experimental verification of methods used to analyze reactor vessel support area neutron streaming
Concrete Rebar	CRBR	Provide experimental verification of neutron flux attenuation and secondary gamma production of reinforced concrete
LLFM		Provide experimental verification of ex-vessel LLFM neutron flux and count rate
Sodium Pipe Chaseway	FFTF, CRBR	Provide experimental verification of neutron streaming in sodium pipe chaseway
Effect of Shield Heterogeneities--Upper Axial and Radial Shields	LMFBR	Provide experimental determination of streaming effects due to composition heterogeneities (Upper Axial and Radial Shields)

TABLE 12.1-A1 (Continued)

Experiment	Sponsor*	Objective
Duct Streaming--Lower Axial Shield	LMFBR	Provide experimental determination of streaming effects due to composition heterogeneities (Lower Axial Shield)
Annular Gap and Slit Streaming	FFTF	Measure neutron streaming through iron shields with annular gaps or slits simulating closure head shielding.
Core Assembly Shield Streaming	FFTF	Provide experimental verification of streaming through coolant holes of core assembly shields.
Sodium Penetration	FFTF	Measure shielding effectiveness of sodium pool attenuation through up to 15 feet of sodium.
Inconel Penetration	FFTF	Measure neutron shielding effectiveness of Inconel shielding material
Gamma Ray Experiment	FFTF	Provide experimental verification of neutron transmission through up to 34 inches of carbon steel and provide verification of transmitted gamma spectra and dose.

*Sponsor of experiment involved in providing guidance to AEC-RRD for the specific project. LMFBR experiments are through efforts of reactor manufacturers.

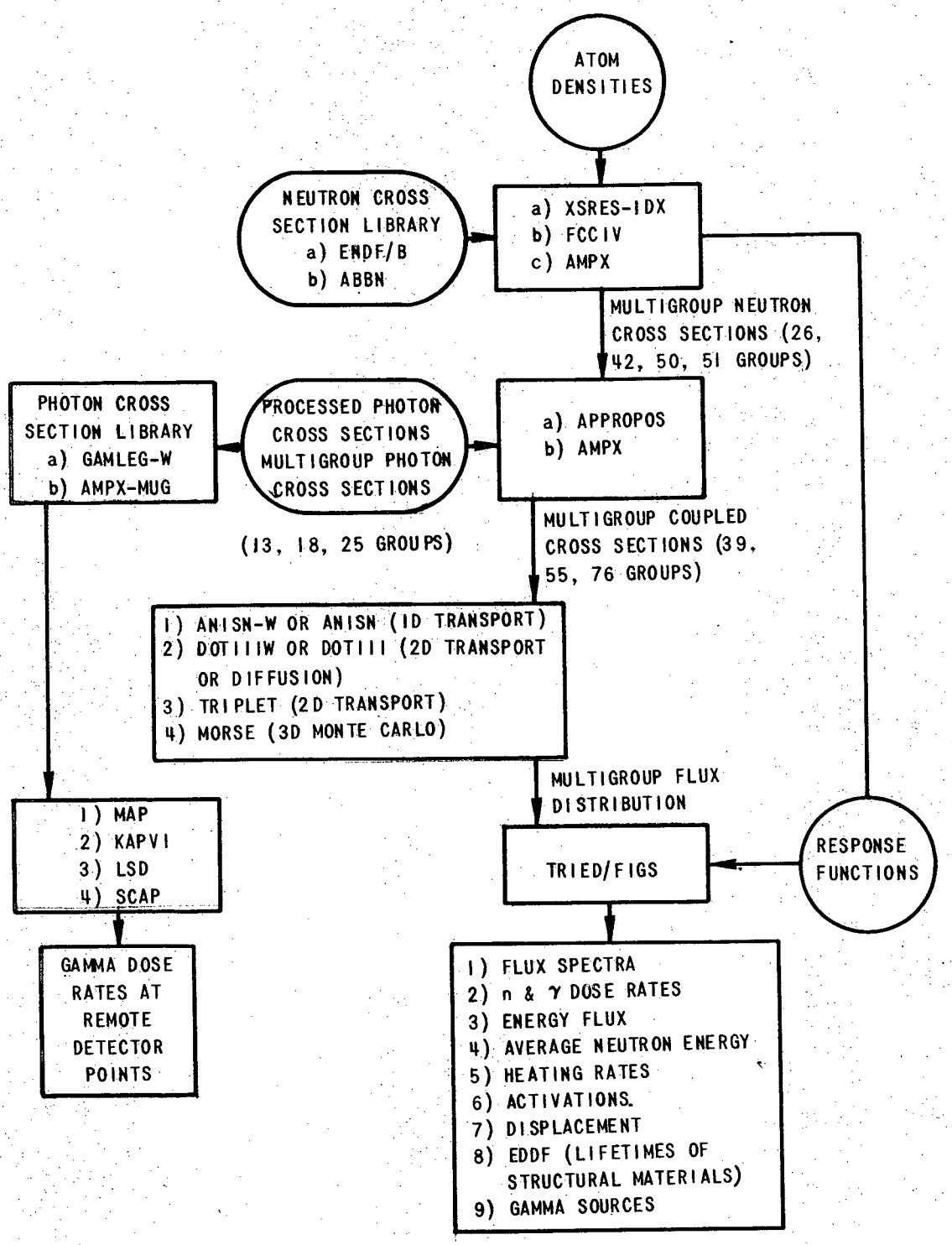

Figure 12.1A-1. Flow Chart of General Analytical Method

6714-22

12.2 VENTILATION

12.2.1 Design Objectives

49 The design objectives of the Heating, Ventilating and Air Conditioning (HVAC) System for normal operation, including anticipated operational
49 occurrences, as they relate to radiation protection, are to:

a) Limit the in-plant buildup of airborne radioactivity during normal plant operations so that the exposure to an individual from radioactive materials in the air will not exceed the design radiation dose rate for a specific habitable zone; Plant Ventilation will comply with the requirements of 10CFR20 Appendix B, Table I. Management policy regarding ALARA for this system is identical to that set forth in Section 12.1.1.2. 14

b) Limit the migration of airborne radioactivity from areas of high radiation potential to areas of low radiation potential.

c) Assure habitability of the main control room during any postulated abnormal condition to enable control or shutdown of
49 the plant, in compliance with CRBRP General Design Criterion 17.

d) Provide for the capability to isolate the Reactor Containment Building atmosphere after an accidental release of radioactivity.

The potential sources of radioactivity that the Ventilation System must consider in the design are the following:

a. The head access area (HAA), into which the cover gas and buffer seal gas leak.

b. The operating floor level of the Reactor Containment Building (RCB), into which the head access area air is vented.

c. The cells which house the intermediate sodium piping, into which tritium diffuses from the piping.

12.2.2 Design Description

49 Sections 9.6.6 describe the ventilation systems for all areas of the plant. The subsystems of the ventilation systems that provide control of airborne radioactivity are the RCB, RSB, Control Room, IHTS piping
49 cell and the HAA air cooling systems. The following discussion provides a system description that satisfies the Design Basis.

Provisions have been made in the design of the ventilation systems to prevent the flow of airborne radioactivity from one building to another and to maintain airborne radioactive contamination concentrations in areas
49 occupied by personnel as low as reasonably achievable. 25

Amend. 49
April 1979

The potential sources for airborne radioactive contamination are located in the Reactor Containment, Reactor Service and in the Steam Generator Buildings. All buildings are separated by heavy structural, shielding and fire separation walls. The penetrations through these walls are hermetically sealed. The Reactor Containment, Reactor Service and Steam Generator Buildings are served by totally independent HVAC systems. The relative pressure differential between certain portions of the above or other buildings are small (max. ¼ inch H_2O) and cannot cause flow or airborne radioactivity from one building to the other, due to the above described separation.

19 The outside air make-up rate for the plant HVAC systems is based on the frequency of occupation of the various areas. The occupation frequency
18 was determined in a conservative manner. On the basis of the outside air make-up rate, the plant HVAC system is capable of diluting the airborne contamination concentration in all occupied areas well below the permissible limits.

Additionally, the HVAC system air distribution is designed in such a manner, that all occupied areas, where the probability of airborne radioactivity exists, are maintained under a slight negative pressure with respect to the surrounding areas, resulting in the flow of air from the clean to the contaminated areas. The above principle is carried out for adjacent areas having airborne radioactive concentration probability, such that the degree of negative pressure is in proportion with the probability of the contamination, resulting in the flow of air from the areas having lower contamination to areas having higher contamination. 25

The ventilation systems that limit the airborne radioactivity to levels below those specified in 10CFR20 are the RCB and IHTS piping cell ventilation systems. The source of airborne radioactivity to the RCB is

reactor cover gas and buffer seal gas leakage into the head access area (HAA) with subsequent leakage into the RCB atmosphere. The ventilation system draws air from the containment operating floor through the HAA and exhausts back to
18 the RCB atmosphere. The required minimum flow rate of this stream is calculated based upon the radioactivity leak rate given in Table 12.2-1.

The throughput air flow for the RCB, HAA and IHTS ventilation systems provides dilution of airborne radioactivity to levels below MPC occupational levels to maintain the total radiation dose rate from airborne activity and activity from other sources below the allowable dose rate for the specific habitable zone. The required throughput air flow to limit the concentration of activity in the HAA to one-tenth MPC occupational values is 12000 cfm. The radionuclide concentrations in the HAA for operation with 1% failed fuel is presented in Table 12.2-2.

18

The tritium leakage into the IHTS piping cells is presented in Table 12.2-1. The 1.7×10^{-3} Ci/day leakage requires a dilution to 5×10^{-7} uCi/cc to meet the one-tenth MPC occupational concentration. With a 1000 cfm ventilation rate the tritium concentration in the IHTS piping cells will be 0.0083 MPC occupational limits.

The systems that limit the cross-contamination of airborne radioactivity are the Heating and Ventilation Systems for the RCB and the Inert Gas Receiving and Processing Systems. The basic design principle is the use of slightly negative or slightly positive compartment pressures to prevent exfiltration or infiltration of airborne contaminants.

The main control room outside air supply can be filtered by 100% redundant filters and is designed to operate during loss of off-site power, to assure habitability in any abnormal situation to enable control or shutdown
49 of the plant, in compliance with CRBRP General Design Criterion 17. This air supply maintains the control room at a positive pressure, relative to the outside atmosphere. It is provided with two widely separated and selectable intakes.

The inert atmosphere cells that contain primary sodium or radioactive material can be operated at a slightly negative pressure (nominal 2.5 in. water gauge) with respect to the adjacent work areas.

The RCB air supply and exhaust ducts are provided with automatically operated isolation valves. In the event of effluent airborne activity levels exceeding preset limits, the building is isolated. Provisions are included for the installation of a portable filter unit as required.

Sections 9.6.1 through 9.6.5 describe the ventilation systems for each building and the main control room. The conceptual design for the RCB provides 14,000 cfm of outside air. This is adequate to meet the design objectives for radiation protection. The conceptual design flow rate to each of the
18 IHTS piping cells is 1000 cfm, which is sufficient to meet the design objective for radiation protection and to satisfy personnel access requirements. Other plant areas will be designed in accordance with conventional heating and ventilation requirements. Analysis of design requirements for other areas involving potential radioactive release will be undertaken and results incorporated, as necessary, in the heating and ventilation requirements for these areas.

12.2.3 Source Terms

The sources of radioactivity originate from the reactor cover gas leakage and H^3 diffusion. The estimated radioactive leakages rates into normally accessible cells are presented in Table 12.2-1. The basis of the table is provided in Section 11.3.

12.2.4 Airborne Radioactivity Monitoring

12.2.4.1 Design Criteria

Fixed and mobile continuous air monitors (CAM) will be employed in conjunction with portable air sampling equipment to
49 satisfy the requirements of CRBRP General Design Criteria 17 and 56 and the relevant sections of 10CFR20; and to verify that radioactive atmospheric contamination within the CRBRP remains normally "as low
49 as reasonably achievable".

The above radioactivity monitoring which is provided for the CRBRP reflects a design philosophy which identifies the following levels of radiation protection (exclusive of the portable personnel monitoring provisions described in Section 12.3).

1. Continuous monitoring (fixed) performed on the ventilation which serves the Reactor Containment
18 Building (RCB) and Reactor Service Building (RSB) operating areas. Continuous monitoring is also performed to verify Control Room habitability.

2. Continuous monitoring (mobile) is performed in frequently occupied Nuclear Island operating areas adjacent to potential radioactivity sources. Frequently occupied areas include
49 radiation zone I and II (Figures 12.1-1 through 12.1-19d) cells which house numerous process system control panels.

Amend. 49
April 197[illegible]

3. Low-volume (integrating) air sampling is performed in infrequently occupied operating areas within the Nuclear Island. Infrequently occupied areas include radiation zone II and III cells where routine tasks are performed on a limited access basis.

4. High-volume grab sampling is performed (with accompanying Counting Room analysis) prior to personnel entry into Zone IV radiation zones; and whenever a gross determination of short-lived airborne radioactivity in lower radiation zoned areas is desired.

Fixed CAM's are provided as effluent and process monitors (described in Section 11.4) at locations which could conceiveably be subject to increases in radioactivity levels during various plant evolutions. The process monitors are used to monitor the ventilation exhaust from a particular cell or group of cells. Upon detection of radioactivity above desired levels the radiation monitor will produce an alarm at the process system local panel (in addition to the Control Room) and some monitors will initiate a signal to automatically isolate the affected area. The effluent monitors perform surveillance functions and provide (in the Control Room) indication of an abnormal occurrence warranting investigation by Health Physics personnel. Since the effluent monitors don't perform initiation of isolation the ranges have been selected to provide monitoring during normal and accident conditions. These monitors are included in Table 11.4-1. Fixed CAMs, except those downstream of HEPA filters will withdraw the samples isokinectically in accordance with ANSI N13.1. In addition, the monitors will be located as close as practical to the sample point, and sample line bends are minimized to avoid plate out.

Fixed CAM's are also provided to ensure adequate protection against contamination of the Control Room atmosphere due to airborne radioactivity following an accident condition. This monitoring arrangement is described in Section 11.4. Fixed radiogas monitors (PPS) are also used to initiate Reactor Containment Isolation as discussed in Section 7.3.1.

Mobile CAM's will be provided in select locations throughout the CRBRP to perform the following functions:

1. Continuously monitor the atmosphere at any specific location where maintenance is performed.

2. Continuously monitor the atmosphere at any specific location where a process system failure is suspected of causing airborne radioactivity leakage.

3. Continuously monitor individual inerted cell purging activities as required by the Heating, Ventilating and Air Conditioning System.

4. Continuously monitor the RCB atmosphere following containment isolation, after connection to the post-accident containment sampling penetrations discussed in Section 11.4.2.2.1.

5. Provide backup support to inoperative stationary airborne radioactive monitors.

The mobile CAM's will provide local audible and visual alarm indication of airborne radioactivity levels which exceed the monitor setpoint(s). Locations and design parameters of the various mobile airborne activity monitors are given in Table 12.2-3.

High and low volume portable air samplers will be employed to obtain representative samples of breathing air at infrequently occupied operating areas of the CRBRP. Samples obtained will be analyzed in the Counting Room for gross activity and radioisotopic identification, as required. The portable air samplers will be supplied as health physics equipment, and their frequency of use will be governed by the operational procedures of the CRBRP Health Physics Program.

12.2.4.2 Monitoring System Description

12.2.4.2.1 Continuous Air Monitors

Continuous air monitors (CAM) are used to provide detection of radiogas, particulate, radioiodine and alpha (Pu) activity as indicated in Table 12.2-3. A combination of single and multichannel instruments are used to perform the required monitoring functions. The following is a description of each type of monitor provided:

Gaseous Radioactivity Monitors

Each radiogas CAM continuously draws gas/air samples through a particulate filter into a shielded 4-Pi sample chamber where the gas is viewed by a beta detector, and then returns the gas/air back to the original source. A regulated vacuum pump is used to maintain desired flow rate through the monitor. Samples withdrawn from process or effluent flow will be obtained isokinetically from the source stream. Each monitor consists of a radiogas detector, vacuum pump, microprocessor and accessories, local indicator and alarms. The detector will have a minimum sensitivity of 3×10^{-7} μCi/cc for Kr-85, at the 95% confidence level. Each monitor cabinet will include local loss-of-signal, high and high-high radiation indicator lights, gas/air sample flowmeter and count-rate meter. Taps will be provided to allow samples to be withdrawn for analysis in the Counting Room. For stationary monitors, the detection signal is continuously provided for display on redundant Radiation Monitoring System CRTs located in the Control Room and the Health Physics Area of the Plant Service Building, via their respective Central Processing Units and Mini-Computers (System Controllers). All control signals from monitors which are transmitted to interfacing systems will originate from Remote Process Stations which are part of the local monitor cabinet. The alarm signals are permanently recorded by the redundant Radiation Monitoring System Line Printers located in the Control Room and Health Physics Area.

Iodine and Gaseous Radioactivity Monitors

Radioiodine and radiogas CAM's provide two distinct detection channels within a single monitor housing. A regulated vacuum pump continuously draws a gas/air sample at a measured flow rate into the monitor assembly.

The sampled gas/air flows through a fixed iodine filter, where a gamma detector observes radioiodine activity through a discriminator window. The minimum radioiodine sinsitivity is 10^{-10} μCi/cc for I-131 at the 95% confidence level.

From the iodine filter the air sample passes into a 4-Pi shielded chamber where a beta detector observes gaseous activity with a minimum sensitivity of 10^{-6} μCi/cc for Kr-85 at the 95% confidence level. The gas/air sample is then exhausted to the original source.

Each monitor contains the detectors, vacuum pump, microprocessor and accessories, and indicators. Display provisions at each monitor cabinet include (common for each detection channel) loss-of-signal, high and high-high radiation indicator lights, and (separate for each detection channel) count-rate meters. A sample flow rate gauge is also provided.

The detection signal is continuously provided for display on redundant Radiation Monitoring system CRTs located in the Control Room and the Health Physics Area of the Plant Service Building, via their respective Central Processing Units and Mini-Computers (system Controllers). All Control signals from monitors which are transmitted to interfacing systems will originate from Remote Process Stations which are part of the local monitor cabinet. The alarm signals are permanently recorded by the redundant Radiation Monitoring System Line Printers located in the Control Room and Health Physics Area.

Particulate, Iodine and Gaseous Radioactivity Monitors

Particulate, radioiodine and radiogas CAM's provide three distinct detection channels within a single monitor housing. A regulated vacuum pump continuously draws a gas/air sample at a measured flow rate into the monitor assembly. If process or effluent flow is being monitored, the sample is obtained isokinetically from the source stream. Particulates are collected on a filter paper having an efficiency of 99.0% for 0.3 microns particle sizes and viewed by a beta detector of minimum sensitivity of 10^{-10} μCi/cc for Cs-137 at the 95% confidence level, during an integrating time determined by sample flow rate. From the particulate filter, the sampled gas/air flows through a fixed iodine filter, where a gamma detector observes radioiodine activity through a discriminator window. The minimum radioiodine sensitivity is 4×10^{-12} μCi/cc for I-131 at the 95% confidence level.

From the Iodine filter the air sample passes into a 4-Pi shielded chamber where a beta detector observes gaseous activity with a minimum sensitivity of 3×10^{-7} μCi/cc for Kr-85 at the 95% confidence level. The gas/air sample is then exhausted to the original source.

Each monitor contains the detectors, vacuum pump, microprocessor and accessories, and indicators. Display provisions at each monitor cabinet include (common for each detection channel) loss-of-signal, high and high-high radiation indicator lights, and (separate for each detection channel) count-rate indicators. Mobile monitors are provided with a multipoint strip-chart recorder and audible and visual alarms for high and high-high radiation conditions.

For stationary monitors, the detection signal is continuously provided for display on redundant Radiation Monitoring System CRTs located in the Control Room and the Health Physics Area of the Plant Service Building, via their respective Central Processing Units and Mini-Computers (System Controllers). All control signals from monitors which are transmitted to interfacing systems will originate from Remote Process Stations which are part of the local monitor cabinet. The indicating analog meter in the Remote Process Station will indicate counts per minute on a five decade logarithmic scale. The alarm signals are permanently recorded by the redundant Radiation Monitoring System Line Printers located in the Control Room and Health Physics Area.

Gaseous In-Line Monitors

Gaseous in-line monitors provided to monitor radioactivity in some process systems including HVAC. The Monitor consists of a shielded section of pipe which is mounted by end flanges in the process line. A penetration through the pipe wall allows a beta scintillation detector to be placed in the process system flow. The detector will have a minimum sensitivity of 10^{-6} μCi/cc for Kr-85, at the 95% confidence level. Each monitor will have a local microprocessor with local indicator and alarms.

The detection signal is continuously provided for display on redundant Radiation Monitoring System CRTs located in the Control Room and the Health Physics Area of the Plant Service Building, via their respective Central Processing Units and Mini-Computers (System Controllers). All control signals from monitors which are transmitted to interfacing systems will originate from Remote Process Stations which are part of the local monitor cabinet. The alarm signals are permanently recorded by the redundant Radiation Monitoring System Line Printers located in the Control Room and Health Physics Area.

Alpha Radioactivity Monitors

Each alpha CAM (mobile units) provided will have the capability to differentiate plutonium alpha readings from the natural radon thoron alpha background through delayed detection techniques. Each alpha CAM continuously draws air samples into a shielded chamber where particulates greater than 0.3 microns are deposited on a filter with an efficiency of 99.0% and viewed by α detector(s). A regulated vacuum pump will be used

to maintain desired flow rate through the monitor arrangement, and return the air sample back to the original source. Each monitor contains the alpha detector(s), vacuum pump, microprocessor and accessories and indicators. The detector(s) will have a minimum sensitivity of 10^{-12} μCi/cc for Pu-239 at the 95% confidence level for a collection time of 8 hours. Display provisions at each monitor cabinet include loss-of-signal, loss-of-sample flow, high and high-high radiation indicator lights, sample flow-meter, count-rate meter, strip-chart recorder and audible alarms for high and high-high radiation conditions. These monitors shall have the capability to transmit data to the radiation monitoring consoles in the control room and health physics area when linked to the communication loop at the option of plant operators.

Figures 12.2-1 and 12.2-2 show typical block diagrams of the containment exhaust (PPS) and typical fixed (non-PPS) continuous air radiation monitoring channels. The PPS radiogas monitors used for Containment Isolation differ from the radiogas CAM described previously in the following manner:

1. Each Class 1E Monitor is individually wired to a dedicated Display and Control Unit (DCU) in the Control Room.

2. An analog output is provided by each monitor to the Plant Protection System (Containment Isolation System) Comparators, Logic and Safety Circuits.

3. The buffered output of each monitor is available for display on the Radiation Monitoring System CRTs and logging on Line Printers.

All CAM components will be modular, commercially available units designed for rapid replacement upon failure. Electric components will be exclusively solid-state, as available, and power will be supplied from the Instrument AC busses (120V, 60Hz), with the exception of Class 1E monitors. These latter CAM's will receive Class 1E power (120 Vac, 60Hz) from redundant vital instrument AC busses. Certain design parameters, as well as locations of the various airborne activity monitors are given in Table 12.2-3.

12.2.4.2.2 Portable Air Samplers

Portable air samplers will be used to obtain representative samples of both long and short-lived airborne radioactive contaminants in operating areas of the plant. Their use and placement will be under the direction of the CRBRP site Health Physicist.

Low Volume Samplers

Each sampling station consists of a regulated air pump and filter arrangement to deposit particulates greater than 0.3 microns in size, and/or radioiodine, as required. The sample flow rate is set locally and recorded to enable an accurate determination of activity. The filters will be collected after a suitable integrating time interval, and brought to the Counting Room for analysis. The only local output from the sampler unit is the pump flow signal. The complete pump and filter(s) arrangement are standard, commercially available units designed for ease of maintenance and interchangeability of components.

High Volume Samplers

High volume samplers will employ high speed air blowers to enable grab samples to be obtained in the 20-35 cfm range. Particulate and/or charcoal filters will be used for sample collection, and analysis in the Counting Room will be performed. This type of sampler will be used to determine the airborne radioactivity contribution due to shorter lived isotopes.

12.2.4.3 Maintenance and Calibration

On completion of the monitoring system installation, each CAM will be checked for proper operation and calibrated against a radiation check source(s) traceable back to the National Bureau of Standards or from an equally acceptable source. This initial calibration, and subsequent calibration at six month intervals will verify the electronic operation of both local and Control Room ratemeters and also all annunciation points (loss-of-signal, high radiation, etc.). In addition, each monitor is supplied with a built-in check source to provide rapid functional tests at periodic intervals.

12.2.5 Inhalation Doses

Inhalation doses to plant personnel will be limited and controlled consistent with 10CFR20 requirements via the heating and ventilation system design. Resulting doses will be kept as low as practicable during operation and maintenance and exposures will be compatible with existing regulations (10CFR20).

The expected annual inhalation doses to plant personnel in normally accessible cells can be determined from the leakage rates given in Table 12.2-1 and the design flow rates for ventilation air in the Heat Access Area and Intermediate Sodium Piping cells.

The concentration in these cells, for the expected leakage rates, is estimated by assuming that there is a uniform concentration in the cell atmosphere and the ventilation air stream. Thus, an equilibrium concentration will exist when the curie content discharged per day is equal to the leakage into the cell. The expected concentrations in the accessible cells are given in Table 12.2-4. The doses from the expected concentration can be estimated by assuming the ratio of the concentration to MPC occupational limits for each isotope present and multiplying this by 5 rem, the annual dose which would result from exposure to the MPC for 40 hours per week for 50 weeks of the year.

As shown in Table 12.2-4, the combined expected activity level for the isotopes present is about 0.01 MPC (occupational) in the Head Access Area. Thus, the corresponding annual dose would be about 5mrem/year.

The release to the Intermediate Sodium Piping cells is tritium and the resulting equilibrium concentration is 0.0008 MPC. The resulting expected yearly dose would be about 4mrem/year.

Both of the above annual dose estimates are conservative since each assumes occupancy in the cells by an individual of 40 hours per week for 50 weeks of the year. The expected occupancy is considerably less.

The control room will be designed to assure continued occupancy during postulated accident conditions. The expected radioactivity in the control room during normal plant operations is background level. Additional discussion is provided in Section 12.1.5.

TABLE 12.2-1

LEAKAGE RATES INTO NORMALLY ACCESSIBLE AREAS

	Leakage Into the Head Access Area		Leakage Into the Intermediate Sodium Piping Cells	
Isotope	Design* (Ci/day)	Expected+ (Ci/day)	Design* (Ci/day)	Expected (Ci/day)
Xe^{131m}	4.9E-6	4.9E-7	0	0
Xe^{133m}	1.6E-4	1.6E-5	0	0
Xe^{133}	2.8E-3	2.8E-4	0	0
Xe^{135m}	7.0E-4	7.0E-5	0	0
55 Xe^{135}	1.2E-2	1.2E-3	0	0
Xe^{138}	1.1E-3	1.1E-4	0	0
Kr^{83m}	4.1E-4	4.1E-5	0	0
Kr^{85m}	9.6E-4	9.6E-5	0	0
Kr^{85}	9.2E-8	9.2E-9	0	0
Kr^{87}	1.1E-3	1.1E-4	0	0
Kr^{88}	1.9E-3	1.9E-4	0	0
Ar^{39}	7.9E-3	7.9E-3	0	0
Ar^{41}	2.2E-4	2.2E-4	0	0
49 Ne^{23}	**	**	0	0
H^{3}	1.5E-7	1.5E-7	1.7 E-3	1.7 E-3
55 49 Total	2.9E-2	1.0E-2	0.0017	0.0017

*Design Base releases based on operation with 1% failed fuel
+Releases based on operation with 0.1% failed fuel (Expected Case)
**E-45

Amend. 55
June 1980

TABLE 12.2-2

RADIONUCLIDE CONCENTRATIONS IN HEAD ACCESS AREA - DESIGN VALUES

Isotope	MPC* (μCi/cc)	DESIGN† Concentration (μCi/cc)	DESIGN† Concentration ÷ MPC
Xe^{131m}	2E-5	8.4E-12	4.2E-7
Xe^{133m}	1E-5	2.6E-10	2.6E-5
Xe^{133}	1E-5	4.8E-9	4.8E-4
Xe^{135m}	1E-6	1.0E-10	1.0E-4
Xe^{135}	4E-6	1.6E-8	4.1E-3
Xe^{138}	1E-6	1.5E-10	1.5E-4
Kr^{83m}	1E-6	2.8E-10	2.8E-4
Kr^{85m}	6E-6	1.0E-9	1.7E-4
Kr^{85}	1E-5	1.6E-13	1.6E-8
Kr^{87}	1E-6	5.8E-10	5.8E-4
Kr^{88}	1E-6	1.6E-9	1.6E-3
Ar^{39}	5E-6	1.4E-8	1.7E-3
Ar^{41}	2E-6	1.5E-10	7.5E-5
49 Ne^{23}**	1E-6	**	**
H^3	5E-6	2.7E-13	5.3E-8
55 49 Totals		3.9E-8	9.2E-3

*10CFR20, Appendix B, Table I. (restricted area)
†At 30-year operation, 1% failed fuel (design base)
**Ne^{23} is not included because a minimum period of 5 minutes will occur for leakage from cover gas to head access compartment. Thus Ne^{23} will not be present in the head access. Decay during transit is not considered in evaluating any other isotopes.

TABLE 12.2-3

LOCATION OF CONTINUOUS AIR MONITORS

LOCATION			TYPE OF MONITOR	MONITOR AREA DESCRIPTION	BASIS FOR LOCATION/FUNCTION	REMARKS
BLDG.	ELEV.	CELL NO.				
RCB	B16	161A	Particulate/Radio-Iodine/Gaseous	Operating Floor	Mobile monitor to provide monitoring of work areas within containment	See Figure 12.2-2, See Sections 12.2.4.1 & 12.2.4.2.1. This locations is the normal storage position of the mobile monitor.
RCB	B16	161A	Particulate/Radio-Iodine/Gaseous	Operating Floor	Mobile monitor to provide monitoring of work areas and inerted cells in the containment	See Figure 12.1-2, See Sections 12.2.4.1 & 12.2.4.2.1. This location is the normal storage position of the mobile monitor.
RCB	B16	161A	Alpha	Operating Floor	Mobile monitor to provide monitoring of work areas within containment	See Figure 12.1-2, See Sections 12.2.4.1 & 12.2.4.2.1. This location is the normal storage position of the mobile monitor.
RCB	766	105M	Particulate/Radio-Iodine/Gaseous	Operating Floor	Mobile monitor to provide monitoring of work areas and inerted cells in the containment	See Figure 12.2-5, See Sections 12.2.4.1 & 12.2.4.2.1.. This location is the normal storage position of the mobile monitoring.

TABLE 12.2-3 (Cont'd)

LOCATION BLDG.	ELEV.	CELL NO.	TYPE OF MONITOR	MONITOR AREA DESCRIPTION	BASIS FOR LOCATION/FUNCTION	REMARKS
RSB	779	307B	Particulate/Radio-iodine/Gaseous	Operating Floor	Mobile monitor to provide monitoring of local work areas and post-accident monitoring of containment atmosphere	See Figure 13.1-11, See Sections 12.2.4.1, 12.2.4.2.1 & 11.4.2.2.1. This location is the normal storage position of the mobile monitor.
RSB	816	308A	Alpha	Operating Floor	Mobile monitor to provide monitoring of local work areas and post-accident monitoring of containment atmosphere	See Figure 12.1-9, See Sections 12.2.4.1, 12.2.4.2.1, & 11.4.2.2.1. This location is the normal storage position of the mobile monitor.
RSB	816	308B	Particulate/Radio-iodine/Gaseous	Operating Floor	Mobile monitor to provide monitoring of local work areas	See Figure 12.1-9, See Sections 12.2.4.1 & 12.2.4.2.1. This location is the normal storage position of the mobile monitor.
SGB-IB	816	262	Particulate/Radio-iodine/Gaseous	Operating Floor	Mobile monitor to provide monitoring of SGB-IB local work areas and post-	See Figure 12.1-19a, See accident monitoring of containment Sections 12.2.4.1, atmosphere12.2.4.2.1 & 11.4.2.2.1. This location is the normal storage position of the mobile monitor.

TABLE 12.2-3 (Cont'd)

LOCATION			TYPE OF MONITOR	MONITOR AREA DESCRIPTION	BASIS FOR LOCATION/FUNCTION	REMARKS
BLDG.	ELEV.	CELL NO.				
CB	816	431	Particulate/Radio-iodine/Gaseous	Operating Floor	Mobile monitor to provide monitoring of control room and local work areas	See Section 12.2.4.1 & 12.2.4.2.1. This location is the normal storage position of the mobile monitor.

TABLE 12.2-4

EXPECTED* ANNUAL EXPOSURE IN NORMALLY ACCESSIBLE CELLS

Head Access Area

Isotope	Expected Concentration (μCi/ml)	MPC+ (μCi/ml)	Expected Concentration ÷ MPC
Xe 131m	9.7 E-13	2.0 E-05	4.8 E-8
133m	3.0 E-11	1.0 E-05	3.0 E-6
133	5.5 E-10	1.0 E-05	5.5 E-5
135m	9.4 E-12	1.0 E-06	9.4 E-6
135	1.3 E-9	4.0 E-06	4.5 E-4
138	1.6 E-11	1.0 E-06	1.6 E-5
Kr 83m	2.9 E-11	1.0 E-06	2.9 E-5
85m	1.1 E-14	6.0 E-06	1.9 E-5
85	1.7 E-14	1.0 E-05	1.7 E-9
87	6.0 E-11	1.0 E-06	6.0 E-5
88	1.7 E-10	1.0 E-06	1.7 E-4
Ar 39	3.5 E-9	5.0 E-06	7.0 E-4
49 41	6.4 E-11	2.0 E-06	3.2 E-5
H 3	9.2 E-15	5.0 E-06	1.8 E-9
49 TOTAL	5.84 E-9		0.0015

Intermediate Sodium Piping Cells

49 H3	4.0 E-09	5.0 E-06	7.9 E-04

+MPC = MPC for Restricted Areas
*Failed Fuel Fraction = 0.1 percent at 1 year operation

Amend. 49
April 1979

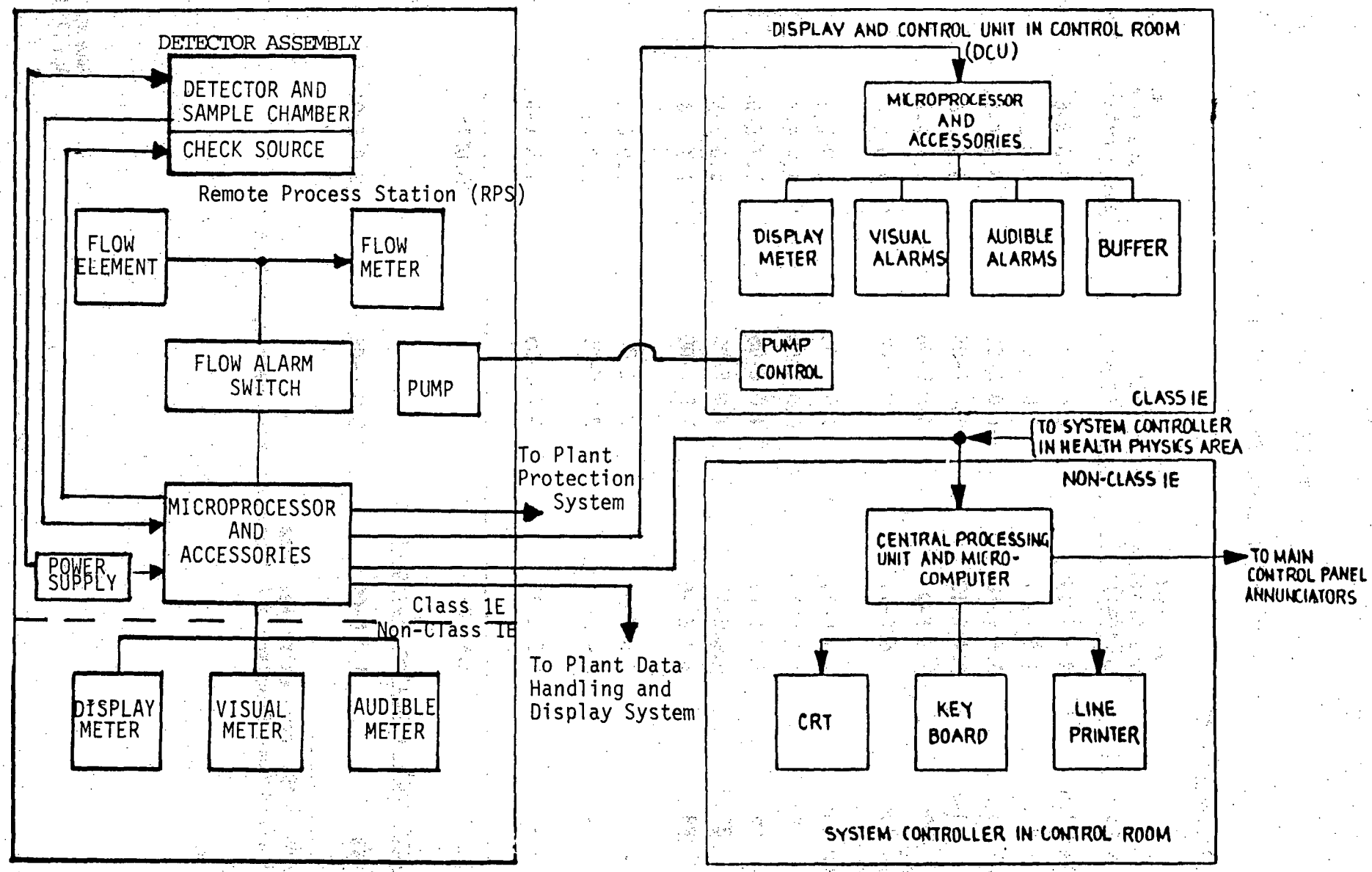

FIGURE 12.2-1 PPS CONTAINMENT EXHAUST RADIATION MONITORING CHANNEL (CLASS IE)

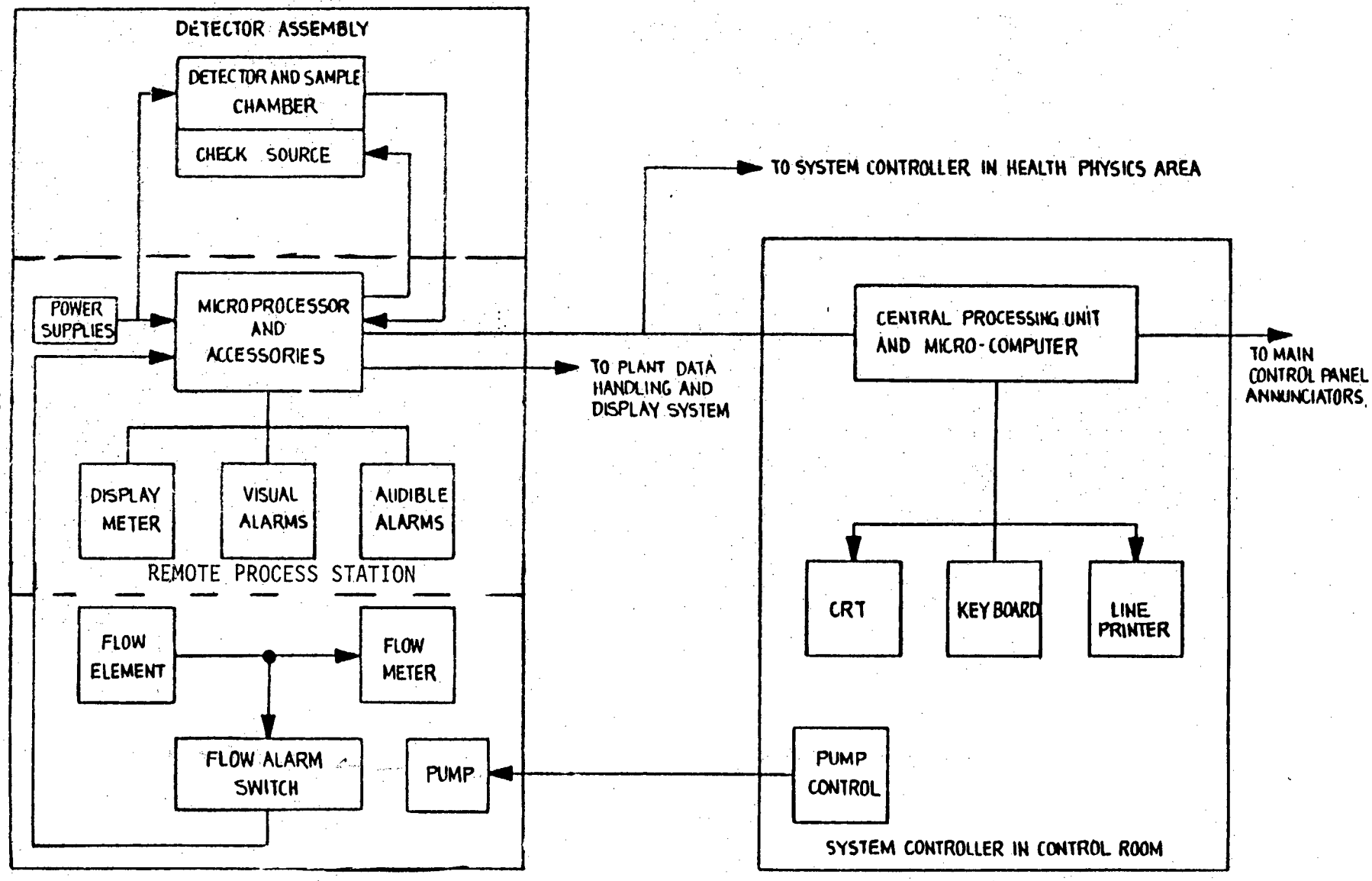

FIGURE 12.2-2 NON PPS AIR RADIATION MONITORING CHANNEL

12.3 HEALTH PHYSICS PROGRAM

12.3.1 Program Objectives

The health physics staff is a unit of the Radiological Hygiene Branch and is responsible for the health physics activities at the plant. It applies radiation standards and procedures; reviews proposed methods of plant operation; participates in development of plant documents; and assists in the plant training program, providing specialized training in radiation protection. During preoperational tests and after plant startup it provides health physics coverage for all operations including maintenance, fuel handling, waste disposal, and decontamination. It is responsible for personnel and inplant radiation monitoring, and maintains continuing records of personnel exposures, plant radiation, and contamination levels. Through implementation of the described program, plant personnel exposures will be maintained as low as is reasonably achievable (ALARA). A Radiation Protection Plan following the guidance of NUREG 0761, "Radiation Protection for Nuclear Power Reactor Licencees", will be developed and submitted at the Operating Licence stage.

The health physics staff is under the administrative supervision of the Chief, Radiological Hygiene Branch, in the TVA Division of Occupational Health and Safety.

The plant health physicist is responsible for direction of an adequate program of health surveillance for all plant operations involving potential radiation hazards. He keeps the plant manager informed at all times of radiation hazards and conditions related to potential exposure, contamination of plant and equipment, or contamination of site and environs. His duties include training and supervising health physics technicians; planning and scheduling monitoring and surveillance services; scheduling technicians to ensure around-the-clock shift coverage as required; maintaining current data files on radiation and contamination levels, personnel exposures, and work restrictions; and ensuring that operations are carried out within the provisions of developed radiological hygiene standards and procedures. He provides assistance and advice to the plant manager during radiological emergencies.

In addition, off-site staff from the Radiological Hygiene Branch is responsible for conducting a comprehensive environmental monitoring program prior to, during, and after plant startup. The Division of Occupational Health and Safety also advises on potentially harmful factors in the working environment other than radiation, all in relation to identified and approved standards as given in the TVA Hazard Control Manual.

Health physics personnel that are assigned to the plant staff will meet the provisions of Regulatory Guides 8.8 and 8.10 or Regulatory Guide 1.8 and Section 4 of ANSI N18.1, whichever is applicable at the time of appointment. As TVA has a highly qualified health physics staff, there should be no problem in meeting the provisions of the applicable guides.

TVA has established a formal program to ensure that occupational radiation exposures to employees are kept as low as is reasonably achievable (ALARA) which will be applied to CRBRP. The program consists of: (1) full management commitment to the overall objectives of ALARA; (2) issuance of specific administrative documents and procedures to the TVA design and operating groups that emphasize the importance of ALARA throughout the design, testing, startup, operation, and maintenance phases of TVA nuclear plants; (3) continual appraisal of radiological conditions in the operating nuclear plants by an on-site health physics staff, and (4) a 4-member corporate ALARA committee consisting of representatives from the TVA design, operations, and radiation protection groups, whose purpose is to review and appraise the effectiveness of the ALARA program on a plant-by-plant basis including CRBRP. This committee consists of key management and technical staff who have extensive backgrounds in inplant radiation control, including such areas as plant layout, shielding, personnel access control, ventilation, waste management, area and personnel monitoring, plant operations, and plant maintenance. The committee periodically evaluates TVA's overall ALARA program by assessing trends in occupational exposures or other radiation control problems, reviewing plant operating reports and radiation exposure profiles, and conducting onsite audits of each plant's ALARA efforts.

Specific responsibilities of the ALARA committee include the following:

(a) Determines that an effective ALARA program is established at each TVA nuclear power plant that appropriately integrates TVA management philosophy and NRC regulatory requirements;

(b) Determines that the ALARA program is implemented from initial planning through decommissioning of the plant;

(c) Reviews plant design features, operating procedures, and maintenance practices and audits the onsite radiation control program at least annually to assure that the objectives of the ALARA program are attained;

(d) Determines that information and data pertaining to radiation exposure of personnel from other operating LWR power plants are reflected in the design and operation of new TVA plants;

(e) Determines that experience gained during the operation of nuclear power plants relative to inplant radiation control is factored into revisions of operating procedures, where necessary, to assure that the procedures indeed do meet the objectives of the ALARA program;

(f) Determines that all maintenance activities are planned and accomplished in accordance with the objectives of the ALARA program; and

49

(g) Determines trends in the exposure of station personnel in order to permit actions to be taken to correct adverse trends.

Reports of the findings of the ALARA committee are promptly conveyed to top-level management staff along with appropriate recommendations for improvements in the design of new plants or corrections in operating plants.

12.3.2 Facilities and Equipment

The health physics facilities necessary to monitor and control the routine radiological condition of the plant is shown on the Plant Service Building General Arrangement drawing in Section 1.2. The focal point of control is the assembly area. All personnel entering or leaving the controlled (restricted) area must pass through this area. All other
52 doors are for emergency use only. The general entry control requirements will be coordinated with industrial security.

The control point is equipped with the following:

a) A health physics work station for routine counting and assignment of required equipment to workers entering the restricted area.

b) Mask-Protective clothes issue and storage area.

c) Male/female lockers, toilet facilities shower station

d) Mask cleaning station

e) Combined laboratory

f) Chemical storage room

g) Counting room

h) Hot instrument shop

The main personnel monitoring station is at the Reactor Service Building entrance from the Plant Service Building. This entrance/exit door will be equipped with all necessary monitoring equipment.

Contamination control, within the Plant Service Building control area, such as entering and exiting from counting room, hot instrument shop, mask cleaning area, laboratory area, radwaste area, will be accomplished by use of local survey equipment located at the accesses to these areas.

Contaminated laundry will be bagged, surveyed, and shipped
49 off-site for laundering.

For radiological purposes, all other areas, i.e., outside the RCB, RSB, Intermediate Bay and the cells in the PSB are uncontrolled (unrestricted).

Portable and laboratory equipment located in the health physics work station will allow the health physics personnel to measure dose rates and contamination levels throughout the plant in all routine and emergency situations. The portable health physics survey instrumentation is listed in Table 12.3-1 with the operational characteristics for each instrument. The fixed health physics laboratory counting systems are described in Table 12.3-2.

All potentially contaminated liquid drains in this area will be routed to the radwaste system and all potentially contaminated gaseous exhausts will be HEPA filtered.

57 Portable survey instrumentation will be checked and calibrated routinely with standard radioactive sources by the TVA Branch Laboratory in Muscle Shoals, Alabama. Accurate records on the performance of each instrument during each calibration will be maintained at this laboratory. Calibration and maintenance procedures specific for each instrument are written and routinely used. Each laboratory counting system is checked at regular intervals with standard radioactive sources for proper counting efficiencies, background count rates, and high voltage settings by health physics personnel at the plant.

TVA will provide protective clothing for use in radiation areas. Clothing required for a particular instance shall be prescribed by the Health Physics Staff based upon the actual or potential radiological conditions. Protective clothing available for use are:

a. Coveralls

b. Lab coats

c. Gloves - plastic and/or latex in light and heavy weights

d. Gloves - cotton in heavy weights and light weights

e. Head covers - skull caps and hoods

f. Foot covers - shoe rubbers and plastic booties

g. Plastic suits

49 Tape will be provided so that openings in clothing and between pieces can be sealed.

Respiratory devices available include the following:

a. Full-face masks with high efficiency particulate and charcoal filters.

b. Full-face masks with constant air flow supplies. A manifold unit will be used that contains mist and chemical filters, a regulatory and relief valve. Plastic supplied air hoods are also available.

c. Self-contained breathing apparatus of the 30-minute, pressure-demand bottled air type.

Equipment decontamination facilities consist of a large component cleaning cell in the Reactor Containment Building where large equipment will have the sodium and radioactive contamination removed prior to existing the building. In addition, there is a decontamination facility in the radwaste area of the Reactor Service Building with sinks and other decontamination equipment that will be used for small equipment, tools, etc.

There is a personnel decontamination facility with showers and sinks in the Plant Service Building near the exit from the controlled access area portal and the health physics work station. This facility will have the necessary decontamination equipment and supplies and appropriate survey instrumentation is readily available.

All exiting from the controlled access areas will be through a designated portal. Personnel and equipment contamination checkout instruments such as hand and foot counters and friskers will be available at the portal. All movement of contaminated personnel and equipment will be under health physics surveillance and control.

Respiratory protective equipment will be decontaminated, sanitized, surveyed, sealed in plastic bags and stored in the specified storage areas as will decontaminated clothes (see Plant Service Building G.A. in Section 1.2). Portable health physics instruments and equipment will be stored in the health physics work station or in specified field locations. Laboratory counting instruments will be located in the chemistry laboratory counting room and the health physics work station dependent upon the type and use of the instrument. Various chemical supplies will be stored in the chemistry laboratory. In addition many chemistry and health physics supplies will be stored in the plant warehouse on an automatic minimum/maximum reorder basis. 49

12.3.3 Personnel Dosimetry

A personnel monitoring service is provided within TVA for personnel exposed to ionizing radiation. A central laboratory for the calibration, processing, and handling of the badges is located in Muscle Shoals, Alabama. The badges, processed at monthly intervals, contain thermoluminescent dosimeters (TLD) for the measurement of dose due to beta, gamma, and neutron radiations. These dosimeters will measure doses from 10 mrem to greater than 1000 rem. Procedures are written for the processing and handling of the dosimeters strictly in accordance with the manufacturer's recommendations. The dosimeters are calibrated with standard radioactive sources specific for the type of radiation measured. A cross-check was performed with the National Sanitation Foundation on the accuracy of the dose determination for beta, gamma, and fast neutron radiations. The task of recording and tabulating the dose data is performed by computer. The printout details (for each monitoring period and for each individual working in the plant) the dose in rem to the skin and to the critical organs from external radiation for the current month, current quarter, current year, and entire exposure history and the fraction of the limit defined in 10 CFR, Part 20. These reports are maintained at the central laboratory in Muscle Shoals and in the plant health physics office. The TLD badge program follows the guidance provided in Regulatory Guide 8.7, "Occupational Radiation Exposure Systems."

TVA has a whole body counter in the plant to determine internal deposition of gamma-emitting radionuclides. The frequency of the counts will be determined for each individual dependent upon his work environment. Annual monitoring is performed as prescribed in "Bioassay Requirements for Nuclear Plant Workers" of the Division of Power Production Procedures Manual. The counter, which will be calibrated with standard radioisotope solutions in configurations approximating the human body, will employ a 1024 channel analyzer and a chair-type shadow shield that will enable the detection of approximately 1% of a maximum permissible body burden for the common gamma-emitting radionuclides associated with nuclear power plant operation. The gamma spectrum will be unfolded using a least squares computer program. The guidance of Regulatory Guide 8.9, "Acceptable Concepts, Models, Equations, and Assumptions for a Bioassay Program," has been followed.

The guidance of Regulatory Guide 8.3, "Film Badge Performance Criteria", is followed except that TVA does not calibrate to low energy photons and thermal neutrons in Table 1 of ANSI N13.7-1972 as TVA has not encountered radiations in these categories. TVA will add calibration in these categories if and when our experience indicates exposures are occurring in them. In addition, as TVA has had no problems in over one year's experience at higher temperature differentials than specified in ANSI N13.7-1972, Section 5.4.9, TVA may exceed this specification. Since the expected exposure incurred will be a combination of
49 beta-gamma emitters typical of activation and fission products, cali-

bration with the two recommended beta sources would not lead to any substantial increase in accuracy. Calibration geometries using uranium also result in very conservative exposure determination not realistic in the actual case. Therefore, the beta calibration will use the ANSI N13.7-1972 preferred ^{90}Sr-^{90}Y beta calibration sources only.

The guidance of Regulatory Guide 8.4, "Direct-Reading and Indirect-Reading Pocket Dosimeters", will be followed.

12.3.4 Estimated Occupancy Times

The anticipated man hours of occupancy for routine maintenance, operations, and refueling has been estimated for the normal accessible cells of the reactor containment and reactor service building. The anticipated man hours of access during reactor shutdowns to cells which normally contain primary sodium, reactor cover gas or fuel sources have not been estimated but will be small in comparison to the access report in Table 12.3-3.

The head access area of the Reactor Containment Building has the highest potential for airborne radioactivity concentrations. The anticipated exposure to airborne radioactive materials is included within the allowed dose rate.

49 The total estimated man hours per quarter by radiation zone are shown on Table 12.3-4.

TABLE 12.3-1

TYPICAL PORTABLE HEALTH PHYSICS EQUIPMENT

Instrument	Radiation Detected	Accuracy	Range	Number of Instruments	Remarks
GM Survey Meter	β, γ	±10% of full scale	0-150,000 cpm	12	Equipped with end window GM and standard GM detectors
Alpha Survey Meter	α, β	±10% of full scale	0-500,000 cpm	4	Equipped with two flat probes for the detection of α and β radiation
Neutron Survey Meter	η	See remarks	0-5,000 mRem/hr	10	Provides dose rate in mrem/hr for neutrons with energies between 0.025eV and 10MeV; directional response ±10%; energy response +15%; scale linearity ±10%
β, γ Survey Meter	β, γ	±10% of full scale	0-1,000 R/hr	3	Probe extendable to 13 feet and retractable to 20 inches
Cutie Pie Survey Meter	β, γ	±10% of full scale	0-10 R/hr	10	Equipped with either soft shell chamber 360° beta detection or hard shell chamber for discrimination of γ and β radiation
Low Energy Survey Meter	β, γ	±10% of full scale	0-300 mR/hr	1	Metal chamber with thin end window and metal cap for discrimination of γ and β radiation
Pocket Dosimeters	γ	±15%	0-200 mR	625	Integrating, indirect reading

TABLE 12.3-1 (Continued)

Instrument	Radiation Detected	Accuracy	Range	Number of Instruments	Remarks
Pocket Dosimeters	γ	-	0-100R	20	Direct reading
Pocket Dosimeters	γ	-	0-5R	20	Direct reading
Pocket Dosimeters	γ	-	0-1R	20	Direct reading
Pocket Dosimeter Chargers	NA	-	0-200mr/hr	10	For charging direct reading pocket dosimeters
Floor Monitor	β, γ	-	-	1	For locating radioactive spills
G-M Countrate Meter	β, γ	-	250pci	1	Countrate instrument used for contamination control monitoring
Friskers	β, γ	-	250pci	5	Countrate instrument used for monitoring wounds for contamination levels
Fixed Portal Monitors	β, γ	-	0-10R	2	With contrate meter
Low Volume Air Sampler		-	-	10	Contamination Level
Breathing Air Sampler		-	-	4	For use of operators at fuel handling cell

TABLE 12.3-2

TYPICAL HEALTH PHYSICS LABORATORY EQUIPMENT

Instrument	Radiation Detected	Sensivity (One-minute Counting Time)	Number of Instruments	Remarks
GM Counter	β, γ	80 ± 80 pCi	2	One counter with automatic sample changer and one with manual changer; used for measuring contamination levels on paper smears and planchets
Proportional Counter	γ, β, γ	15 ± 15 pCi	2	Differentiates between alpha and beta-gamma radiations; used for measuring contamination levels on paper smears and planchets
GM Countrate Meter	β, γ	250 pCi	1	Countrate instrument used to monitor for contamination control
Liquid Scintallation Counter	β	pCi/ml	1	Counts low energy betas; used for counting tritium samples
Alpha Detector	γ	pCi/l	1	Discriminates alpha energy peaks used primarily to detect presence of plutonium in sodium samples
Computerized spectroscopy unit Ge(Li) detector	β, γ	pCi/l	1	Discriminates gamma energy peaks used for radioisotopic analysis of process effluent and atmospheric samples

TABLE 12.3-3

ESTIMATED MAN HOURS OF ACCESS TO RADIATION AREAS
DURING NORMAL OPERATION AND OPERATIONAL OCCURRENCES

Operating Area	Man Hours/Quarter
1. Reactor Containment Building	
a. Operating Floor and Adjacent Balconies (Zone 1)	1275
b. Cells Below the Operating Floor in NE, SE, and SW Corners and Cell 152 (Zone 2)	950
c. Pump Wells (Zone 2)	580
d. Head Access Area (Zone 2)	220
e. All remaining Accessible Cells (Zone 3)	365
Total Reactor Containment Building	3390
2. Reactor Service Building	
a. Operating Floor, Balconies, and Refueling Cask Shaft and Corridor (Zone 1)	7560
b. OHRS Cells (Zone 1)	70
c. Access Corridors and Adjacent Sampling and Value Gallery Cells Below the Operating Floor (Zone 2)	2490
59 d. Fuel Handling Cell Operating Gallery (Zone 1)	5720
e. Radwaste Processing Area (Zones 1 & 2)	1315
Total Reactor Service Building	17155
3. Provision for Required Health Physics Coverage	3640
Total man hours in accessible areas of Reactor Containment and Reactor Service Building	24185 man hours/quarter

TABLE 12.3-4

ESTIMATED MAN HOURS OF ACCESS TO ACCESSIBLE RADIATION ZONES

Zone	Man Hours/Quarter
Zone I	17850
Zone II	5740
Zone III	595
Total	24185

49

TABLE 12.3-5

PERSONNEL PROTECTION MONITOR - AREA MONITORS

LOCATION BLDG.	ELEV.	CELL	AREA AND/OR PROCESS MONITORED	MONITOR TYPE	METER RANGE mR/hr	OPERATIONAL BACKGROUND (mR/hr)	MONITOR OUTPUT**	BASIS FOR LOCATION*
RCB	824'	162	I&C Cubicle	Direct Gamma	$0.01-10^3$	0.2	A	1.
RCB	824'	163	I&C Cubicle	Direct Gamma	$0.01-10^7$	0.2	A	1,5
RCB	824'	164	I&C Cubicle	Direct Gamma	$0.01-10^7$	0.2	A	1.,4,3
RCB	780'	105U	Primary PTI Operating Area	Direct Gamma	$0.1-10^4$	2.0	A	1.,2
RCB	766'	105S	Operating Floor	Direct Gamma	$0.1-10^4$	2.0	A	1.,2.,5
RCB	780'	161G	Operating Floor	Direct Gamma	$0.1-10^4$	2.0	A	1.,2.
RCB	794'	152	Operating Floor	Direct Gamma	$0.1-10^4$	2.0	A	1.,2.
RCB	752'	105H	Operating Floor	Direct Gamma	$0.1-10^4$	2.0	A	1.,2.
RCB	766'	105Q	Operating Floor	Direct Gamma	$0.1-10^4$	2.0	A	1.,2
RCB	733'	105A	Operating Floor	Direct Gamma	$0.1-10^4$	2.0	A	1.,2,5
RSB	842'6"	311	Refuel. Comm. Center	Direct Gamma	$0.01-10^3$	0.2	B	1.,3
RCB	802'	151	Head Access Area	Direct Gamma	$0.1-10^7$	25.0	A	1.,2.,4.
RSB	816'	308A	Operating Floor	Direct Gamma	$0.01-10^3$	0.2	B	1.,2.,3,6
RSB	816'	308A	Operating Floor	Direct Gamma	$0.01-10^3$	0.2	B	1.,3,6
RWB	816'	643	Decontamination Bay	Direct Gamma	$0.1-10^4$	2.0	B	1.,2
RCB	794'	105V	Operating Floor	Direct Gamma	$0.1-10^4$	2.0	A	1.,2,5
RSB	779'	307A	Ex-Vessel SSP Operating Area	Direct Gamma	$0.1-10^4$	2.0	A	1.
RCB	752'	105K	Operating Area	Direct Gamma	$0.1-10^4$	2.0	A	1.
RSB	755'	306A	Ex-Vessel PTI Operating Area	Direct Gamma	$0.1-10^4$	2.0	A	1.
SGB	836'	271	SGB(IB) Remote Shutdown Panels Area	Direct Gamma	$0.01-10^7$	Unrestricted (See NOTE 2)	A	1.

TABLE 12.3-5 (Cont'd)

BLDG.	LOCATION ELEV.	CELL	AREA AND/OR PROCESS MONITORED	MONITOR TYPE	METER RANGE mR/hr	OPERATIONAL BACKGROUND (mR/hr)	MONITOR OUTPUT**	BASIS FOR LOCATION*
ROB	733'	105F	Make-up Pump Valve Operating Gallery	Direct Gamma	$0.1-10^4$	2.0	A	1,5
ROB	733'	105D	Operating Area	Direct Gamma	$0.1-10^4$	2.0	A	1.
ROB	766'	105M	Primary SSP Operating Area	Direct Gamma	$0.1-10^4$	2.0	A	1.,2.
RWB	795'	605C	IALL Distillate Storage Tank Area	Direct Gamma	$0.1-10^4$	2.0	A	1
RWB	795'	620	Filter Handling Room	Direct Gamma	$0.1-10^4$	2.0	A	1
RSB	733'	305B	Operating Areas	Direct Gamma	$0.1-10^4$	2.0	A	1
RSB	779'	307A	Operating Floor	Direct Gamma	$0.1-10^4$	2.0	B	1.,2
RSB	781'	341	Fuel Handling Cell	Direct Gamma	$0.01-10^8$	2.0×10^8	B	3.
RSB	779'	339A	FHC Operating Gallery	Direct Gamma	$0.01-10^3$	0.2	B	1.,2.
RSB	749'	336	Spent Fuel Cask Corridor and Shaft	Direct Gamma	$0.01-10^8$	5.0×10^4	B	3.
RSB	755'	306AA	Operating Areas	Direct Gamma	$0.1-10^4$	2.0	A	1.,2.
RSB	733'	335	SFSC Service Station Equipment	Direct Gamma	$0.1-10^4$	10.0	B	1.,2.,3
SGB	816'	262	Operating Areas	Direct Gamma	$0.1-10^7$	Unrestricted (See NOTE 2)	A	1.,4
SGB	794'	253	Emerg. Airlock/Analysis Operating Area	Direct Gamma	$0.1-10^4$	Unrestricted (See NOTE 2)	A	1.,4,6
OB	816'	431	Control Room	Direct Gamma	$0.1-10^7$	Unrestricted (See NOTE 2)	A	1.
PSB	816'	146	Combined Lab	Direct Gamma	$0.01-10^3$	Unrestricted (See NOTE 2)	A	1.
RWB	775'	605A	IALL Distillate Storage Tank Area	Direct Gamma	$0.01-10^7$	2.0	A	1.

TABLE 12.3-5 (Cont'd)

BLDG.	LOCATION ELEV.	CELL	AREA AND/OR PROCESS MONITORED	MONITOR TYPE	METER RANGE mR/hr	OPERATIONAL BACKGROUND (mR/hr)	MONITOR OUTPUT**	BASIS FOR LOCATION*
RCB	816'	161A	Equipment/Personnel Airlock Area	Direct Gamma	$0.01-10^3$	0.2	A	1.
RCB	816'	169A	RCB Annulus	Direct Gamma	10^0-10^7	0.2	A	4
RCB	816'	169A	RCB Annulus	Direct Gamma	10^0-10^7	0.2	A	4
RCB	816'	169A	RCB Annulus	Direct Gamma	10^0-10^7	0.2	A	4
RCB	794'	161E	Primary Pump Drive	Direct Gamma	$10^{-1}-10^4$	2.0	A	5
RCB	794'	161D	Primary Pump Drive	Direct Gamma	$10^{-1}-10^4$	2.0	A	5
RCB	794'	161C	Primary Pump Drive	Direct Gamma	$10^{-1}-10^4$	2.0	A	5
RCB	766'	105Y	Valve Operating Gallery	Direct Gamma	$10^{-1}-10^4$	2.0	A	5
RCB	733'	111	Stairwell	Direct Gamma	$10^{-1}-10^4$	2.0	A	5
RCB	733'	105E	Access Area	Direct Gamma	$10^{-1}-10^4$	10.0	A	5
RCB	825'	106	Polar Crane Operating	Direct Gamma	$10^{-1}-10^4$	0.2	A	5
RCB	842'	165	EI&C Cubicle	Direct Gamma	$10^{-1}-10^4$	0.2	A	5
RCB	842'	167	EI&C Cubicle	Direct Gamma	$10^{-1}-10^4$	0.2	A	5
SGB	794'	247	Power Distrib. Panel Area	Direct Gamma	$10^{-1}-10^4$	Unrestricted	A	5,6
SGB	794'	271	Operating Area	Direct Gamma	$10^{-1}-10^4$	Unrestricted	A	5,6
SGB	794'	271	Operating Area	Direct Gamma	$10^{-1}-10^4$	Unrestricted	A	5,6
SGB	794'	262	Operating Area	Direct Gamma	$10^{-1}-10^4$	Unrestricted	A	5,6
SGB	794'	262	Operating Area	Direct Gamma	$10^{-1}-10^4$	Unrestricted	A	5,6
SGB	794'	211A	Valve Gallery	Direct Gamma	$10^{-1}-10^4$	5×10^2	A	6
SGB	794'	248	IHTS Pipe Chase	Direct Gamma	$10^{-1}-10^4$	1×10^4	A	6
SGB	794'	251	IHTS Pipe Chase	Direct Gamma	$10^{-1}-10^4$	1×10^4	A	6
SGB	794'	252	IHTS Pipe Chase	Direct Gamma	$10^{-1}-10^4$	1×10^4	A	6

TABLE 12.3-5 (Cont'd)

LOCATION BLDG.	ELEV.	CELL	AREA AND/OR PROCESS MONITORED	MONITOR TYPE	METER RANGE mR/hr	OPERATIONAL BACKGROUND (mR/hr)	MONITOR OUTPUT**	BASIS FOR LOCATION*
RSB	785'	348	Cont. Cleanup Scrubber	Direct Gamma	10^{-1}-10^{4}	0.2	A	6
RSB	785'	349	Cont. Cleanup & HVAC Duct	Direct Gamma	10^{-1}-10^{4}	0.2	A	6
RSB	840'	332	NDHX 3rd Loop Cell	Direct Gamma	10^{-1}-10^{4}	0.2	A	5
RSB	864'	395A	Annulus Filter	Direct Gamma	10^{-1}-10^{4}	0.2	A	6
RSB	733'	350	NAP Storage Vessel Cell	Direct Gamma	10^{-1}-10^{4}	2.0	A	6
RSB	733'	305M	Access Area	Direct Gamma	10^{-1}-10^{4}	2.0	A	6
RSB	733'	305C	RSB/SGB Passageway	Direct Gamma	10^{-1}-10^{4}	2.0	A	6
RSB	743'	311	SDD 82, 85 & 94 Area	Direct Gamma	10^{-1}-10^{4}	1×10^{2}	A	6
RSB	797'	314	SDD 23 Instru. Area	Direct Gamma	10^{-1}-10^{4}	0.2	A	5
RSB	755'	359	Cont. Cleanup Filter Cell	Direct Gamma	10^{-1}-10^{4}	0.2	A	6
RSB	779'	376	RAPS Pipe Gallery	Direct Gamma	10^{-1}-10^{4}	5×10^{3}	A	6
RSB	775'	3511	EVS Cooling Pipeway	Direct Gamma	10^{-1}-10^{4}	2×10^{3}	A	6

LEGEND

RCB - Reactor Containment Bldg.
RSB - Reactor Service Bldg.
SGB - Steam Generator Bldg.
CB - Control Bldg.
PSB - Plant Service Bldg.
RWB - Radwaste Area (Bay)

*BASIS FOR LOCATION

1. Provide personnel protection in trafficked area.
2. Monitor adjacent high radioactivity area.
3. Monitor refueling operations.
4. High level reactor containment radiation monitor (Accident Monitor).
5. Monitor areas conntaining safety-related equipment (Accident Monitor).
6. Monitor areas with hatches or penetrations from containment (Accident Monitor).

**MONITOR OUTPUT

A. Local and Control Room: Loss of signal indicator light, high level radiation alarm, high-high level radiation alarm, exposure meter (mR/hr).
B. Local, Control Room and Refueling Communication Center: (same as above).

NOTES:
Unrestricted: Defined by 10 CFR 20, Paragraph 20.105.
Background specified in table is maximum design background value during operation, based on Na-24 gamma field.

TABLE 12.3-6

PERSONNEL PROTECTION MONITORING - CONTINUOUS AIR MONITORS

LOCATION			AREA AND/OR PROCESS MONITORED	MONITOR TYPE	DETECTOR			ALARM SETPT.(s) µCi/cc	MONITOR OUTPUT (note 2)	REMARKS
BLDG.	ELEV.	CELL			TYPE	SENSITIVITY (µCi/cm)	BACKGROUND (mR/hr)			
RCB	816'	-	Operating Floor	Particulate	β SCINT	10^{-10} Cs-137	0.2	TBD	A	Mobile Monitor - Provides continuous monitoring of containment atmosphere
				Radioiodine	α SCINT	10^{-10} I -131	0.2	TBD		
				Gaseous	β SCINT	10^{-6} Kr-85	0.2	TBD		
RCB	816'	-	Operating Floor	Particulate	β SCINT	10^{-10} Cs-137	0.2	TBD	A	Mobile Monitor - can be used to monitor individual inerted cells
				Gaseous	β SCINT	10^{-6} Kr-85	0.2	TBD		
RCB	816'	-	Operating Floor	Alpha	α SCINT	10^{-12} Pu-239	0.2	TBD	A	Mobile Monitor - provides continuous monitoring of containment atmosphere
RCB	766'	105M	Operating Floor	Particulate	β SCINT	10^{-10} Cs-137	2.0	TBD	A	Mobile Monitor - can be used to monitor individual inerted cells
				Gaseous	β SCINT	10^{-6} Kr-85	2.0			
RSB	816'	364A	Operating Floor	Particulate	β SCINT	10^{-10} Cs-137	0.2	TBD	A	Mobile Monitor - can be used to monitor individual inerted cells
				Radioiodine	α SCINT	10^{-10} I-131	0.2	TBD		
				Gaseous	β SCINT	10^{-6} Kr-85	0.2	TBD		
RSB	816'	364A	Operating Floor	Alpha	α SCINT	10^{-12} Pu-239	0.2	TBD	A	Mobile Monitor - provided continuous monitoring of RSB Atmosphere
RSB	790'	355A	Operating Floor	Particulate	β SCINT	10^{-10} Cs-137	0.2	TBD	A	Mobile Monitor - can be used for post-accident of containment atmosphere
				Gaseous	β SCINT	10^{-6} Kr-85	0.2	TBD		
IB-SGB	816'	262	Operating Floor	Particulate	β SCINT	10^{-10} Cs-137	0.2	TBD	A	Mobile Monitor - can be used for post-accident monitoring of containment atmosphere
				Radioiodine	β SCINT	10^{-10} I-131	0.2	TBD		
				Gaseous	β SCINT	10^{-6} Kr-85	0.2	TBD		

TABLE 12.3-6 (CONTINUED)

LOCATION			AREA AND/OR PROCESS MONITORED	MONITOR TYPE	DETECTOR			ALARM SETPT.(s) µCi/cc	MONITOR OUTPUT (note 2)	REMARKS
BLDG.	ELEV.	CELL			TYPE	SENSITIVITY (µCi/cm)	BACKGROUND (mR/hr)			
CB	816'	-	Control Room	Particulate	β SCINT	10^{-10} Cs-137	-	TBD	A	Mobile Monitor - Provides continuous monitoring of control room intake air
				Radioiodine	α SCINT	10^{-10} I -131	-	TBD		
				Gaseous	β SCINT	10^{-6} Kr-85	-	TBD		

LEGEND

RCB - Reactor Containment Bldg.

RSB - Reactor Service Building

IB-SGB - Intermediate Bay-Steam Generator Building

CB - Control Building

SGB - Steam Generator Building

SCINT- Scintillation

NOTE: Monitor Output

A. Monitor housing includes: loss-of-signal, high radiation, high-high radiation indicator lights, sample flow reading, countrate meter (per detection channel), multipoint strip-chart recorder, audible alarms.

B. Radiation Monitoring Panel (Control Room): loss-of-signal, high radiation, high radiation indicator lights, countrate meter (per detection channel). Alarm annunciation (loss-of-signal, high radiation, high-high radiation) provided by Plant Control (System 90). Permanent recording by PDH & DS (System 91).

C. Same provisions as B.

Appendix 12A

Information Related To ALARA for Occupational Radiation Exposures

12A.1 CRBRP ALARA Commitment

The CRBRP management commitment for the plant design and operation is such that every reasonable effort shall be made to keep radiation exposures to plant personnel "as low as reasonably achievable" (ALARA), within the regulations of 10CFR20 and the guidelines in Regulatory Guides 8.8, 8.10, and 8.19.

12A.2 10CFR20 Requirements

10CFR20, "Code of Federal Regulations, Energy Section, Standards for Protection Against Radiation", applies to the CRBRP. The following specific criteria are excerpts from 10CFR20 which are applicable to the CRBRP ALARA Program.

12A.2.1 ALARA

Paragraph 20.1 (c) of 10CFR20 states in part that the licensee should, in addition to complying with the limits specified in 10CFR20, make every reasonable effort to maintain radiation exposures and release of radioactive materials in effluents to unrestricted areas as low as is reasonably achievable. "As low as is reasonably achievable" means as low as is reasonably achievable, taking into account the state of technology, and the economics of improvements in relation to benefits to the public health and safety and other societal and socioeconomic considerations, and in relation to the utilization of atomic energy in the public interest.

12A.2.2 Exposure Limits for Restricted Areas

Paragraphs 20.101 and 20.103 of 10CFR20 specify the permissible dose levels and airborne concentrations for restricted areas where the term "restricted area" means any area access to which is controlled by the licensee for purposes of protection of individuals from exposure to radiation and radioactive material. "Restricted area" shall not include any areas used as residential quarters, although a separate room or rooms in a residential building may be set apart as a restricted area.

12A.2.3 Exposure Limits for Unrestricted Areas

Paragraphs 20.105 and 20.106 of 10 CFR20 specify the permissible doses, levels, and concentrations for unrestricted areas where the term "unrestricted area" means any area access to which is not controlled by the licensee for purposes of protection of individuals from exposure to radiation and radioactive materials, and any area used for residential quarters. 49

12A.3 CRBRP ALARA Program

The CRBRP ALARA Program will be managed in two distinct phases through the lifetime of the plant. The first phase consists of the ALARA activities associated with the design, fabrication, construction and preoperational testing activities. For this phase, the Project has established a series of management review and controls designed to incorporate and evaluate specific ALARA features. The second phase will consist of the standard TVA ALARA policies and procedures which will apply during plant operations through the decommissioning of CRBRP. In addition, TVA will participate in the first stage of the ALARA program to assure a smooth transition of the ALARA responsibility to TVA. The two phases of the CRBRP ALARA Program are discussed below.

12A.3.1 CRBRP ALARA Program for the Design Through Preoperational Activities

The first stage of the ALARA Program involves the interaction of multiple engineering disciplines, i.e., radiation analysts, shielding designers, shielding analysts, system designers and component designers. The elements in this stage are as follows:

59| A. Establishment and control of estimated radiation exposure levels.

B. Design of the components and systems to achieve the
59| estimated radiation exposure and shielding objectives.

C. Reviews by the Project ALARA Committee to evaluate and manage the achievement of the objectives for radiation exposure.

D. Reviews by experienced health physicists to obtain applicable current LWR information.

12A.3.1.1 Plant Radiation Exposure Allocations

The Project has developed plant radiation exposure objectives
59| for specific functions and/or systems. The development of these estimated radiation exposure allocations was based on the consideration of the total staff required to operate and maintain the plant, and the radiation exposure objectives for individuals as well as the collective group. Objectives have also been developed for radiation exposures of contract
59| and utility personnel.

12A.3.1.2 Design of Components and Systems

After radiation exposure objectives, plant shielding criteria, radiation source terms, and time-access requirements are identified, the system designers proceed with the system and components design with the objective to reduce the total annual radiation exposure associated with their system to a level as low as reasonably achievable.

Management control of those features of the individual system designs which influence radiation exposure will be assisted by the use of estimated radiation exposure information compiled in a format consistent with Regulatory Guide 8.19. The program to achieve this is being developed to provide estimated radiation exposure information of the following types:

59

59

1. Dose for each nuclear island cell

2. Dose for specific categories of cells (primary heat transfer cells, Reactor Containment Building, Reactor Service Building, etc.)

3. Dose by skill classification (operators, mechanical maintenance, electrical maintenance, etc.)

4. Dose by system (auxiliary sodium, RAPS, etc.)

5. Dose by individual piece of nuclear island equipment.

These compilations are based on the following input information provided by the appropriate systems:

1. Component

2. Manhours of operation and maintenance required for each significant system component.

3. Frequency of Activity

4. Cell/Bldg. number

This, together with the predicted cell dose rate will form the basis for the radiation exposure study.

The radiation exposure information is periodically reviewed and updated as the system/component design and analyses is developed. By utilizing this system, the significant contributors to the plant radiation exposure can be identified and the appropriate ALARA action can be taken.

Section 12.1 provides the specific radiation protection and shielding criteria applicable to the CRBRP design. The system/component designers are responsible for meeting these criteria.

Formal component design reviews are peridocially performed which are consistent with the Project QA requirements. The radiation protection/shielding designers at each Reactor Manufacturer and the Architect Engineer participate in the appropriate reviews and must approve the shielding design of the component design before release. All changes to the plant design are reviewed and the impact on ALARA determined.

49

The appropriate corrective measures are taken as a result of this evaluation.

12A.3.1.3 Project ALARA Committee Reviews

A CRBRP Project ALARA Committee (PAC) has been established for the purpose of periodically reviewing the CRBRP system/component designs to assure that the ALARA goal will be met and to update plant radiation exposure information. The PAC is a multi-discipline group consisting of expertise in radiation analysis, shielding design, safety and licensing, and plant maintenance. These reviews result in guidance on reducing radiation exposure on a system/component basis.

The principal personnel involved in these reviews by position title including their experience are listed below:

59

Manager Shielding Analysis Westinghouse	18 years experience in radiation analysis and shielding design.
Principal Engineer Shielding Analysis Westinghouse	(a) 12 years experience in applied and technical aspects of health physics. (b) 10 years experience in radiation analysis and shielding design.
Senior Engineer Operations and Maintenance Westinghouse	10 years experience in reactor and plant operations and maintenance
Lead Engineer Radiation Safety and Shielding AI	25 years in health physics, and shielding design and analysis
Licensing Engineer, Licensing Group Burns & Roe	(a) 5 years experience in health physics (b) 16 years experience as health physicist in AEC/NRC I&C (c) 3 years experience as licensing engineer

49

12A.3.1.4 Health Physicists ALARA Reviews

The other level of review is performed by health physicists from TVA and Commonwealth Edison. There are three health physicists involved in these reviews, two from the TVA ALARA committee and one from Commonwealth Edison. The two TVA health physicists on the CRBRP ALARA committee satisfy the TVA commitments in PSAR Section 12A.3.2. The health physicist's ALARA review meetings are conducted twice a year. The health physicists review system/component design, maintenance outline procedures, and the radiation exposure data and provide recommendations to further reduce radiation exposure based on their ALARA experience at operating nuclear power plants. The specific personnel involved in these reviews by position title, including their health physics training and experience, are listed below:

Title	Training/Experience
Health Physics Supervisor, Technical Services, Nuclear, Commonwealth Edison Company	23 years experience in Power Reactor Health Physics
Chemical Engineer, Radiation Section, Emergency Preparedness and Protection Branch, Division of Nuclear Power, office of Power, Tennessee Valley Authority	7 years experience in power reactor chemistry programs. 1 1/2 years in radiation protection
Health Physicist Radiological Health Staff, Offices of Management Services Tennessee Valley Authority	23 years of experience in applied and technical aspects of health physics

12A.3.2 CRBRP Operations Stage ALARA Program

The purpose of TVA policies and procedures is to guide the official actions expected of TVA employees. A policy or a required procedure will not serve that purpose unless it is known to all those it affects and is understood, interpreted, and applied consistently. Continuing guides of this nature in TVA are published and distributed in such a way as to be available to all employees concerned. They are known as "administrative releases".

The TVA Administrative Release System is composed of Organization Bulletins, TVA Codes, TVA Instructions, and TVA Announcements.

With regard to information that occupational radiation exposures are low as is reasonably achievable, the following quotation is excerpted from TVA's Administrative Release Manual:

This instruction supplements the TVA Codes under VIII HAZARD CONTROL and VIII HEALTH SERVICES. It describes general responsibilities and administrative arrangements of ionizing radiation arising in connection with TVA's work. The detailed administrative arrangements in the instruction apply to all activities involving ionizing radiation.

TVA management is committed to maintaining radiation exposures to its employees and the general public, and the release of radioactive materials to unrestricted areas as low as is reasonably achievable (ALARA), as defined in 10 CFR Part 20. For the protection of its employees, TVA also subscribes to the ALARA philosophy set forth in the Nuclear Regulatory Commission Regulatory Guides 8.8 and 8.10 in the design and operation of all facilities utilizing radioactive materials or radiation sources.

ALARA Program - In view of the commitment in the TVA Administrative Release Manual, TVA has established a formal program to ensure that occupational radiation exposures to employees are kept as low as reasonably achievable (ALARA) and will apply this program to the CRBRP. The program consists of: (1) full management commitment to the overall objectives of ALARA; (2) issuance of specific administrative documents and procedures to the TVA design and operating groups that emphasize the importance of ALARA throughout the design, testing, startup, operation, and maintenance phases of TVA nuclear plants; (3) continued appraisal of inplant radiation and contamination conditions by the onsite radiation protection staff; and (4) a 4-member corporate ALARA committee consisting of management representatives from the TVA design, operations and radiation protection groups, whose purpose is to review and appraise the effectiveness of the ALARA program on a plant-by-plant basis, including the CRBRP. In developing its ALARA program, TVA has closely followed the recommendations of NRC Regulatory Guides 8.8 and 8.10.

The responsibility for implementing the ALARA philosophy in the operation of TVA nuclear power plants is assigned to two divisions. The Division of Power Production has the responsibility of implementing the operational procedures described in Section C.4 of Regulatory Guide 8.8. Further in the implementation of Section C.4, the Division of Environmental Planning provides the radiation protection staff for TVA nuclear facilities and has the ultimate responsibility for determining that TVA
52 maintains radiation exposures as low as reasonably achievable (ALARA) as defined in 10CFR Part 20. The radiation protection program management and staff in the Division of Environmental Planning will, as a minimum,
49 meet the qualification and training guidelines set forth in Regulatory Guides 8.8 and 8.10.

The review of TVA's radiation protection program will be the responsibility of the Division of Environmental Planning. A management representative of the Radiological Hygiene Branch, Division of Environmental Planning, will be the coordinator of ALARA. An ALARA committee composed of the coordinator, a health physicist, and a management representative of the Divisions of Engineering Design and Power Production will audit each of TVA's nuclear power facilities, including CRBRP, at least once each year to determine that the ALARA criteria are being met.

As each new nuclear plant is staffed in preparation for operation, the Director of Power Production issues operating and maintenance policy documents to plant management setting out the operating philosophy for keeping occupational radiation exposures as low as reasonably achievable. These documents fully meet the intent of NRC Regulatory Guides 8.8 and 8.10 and 10CFR Part 20 for normal operations, refueling, inservice inspection and maintenance activities.

Numerous documents, procedures and instructions are issued by each nuclear plant superintendent to his staff that emphasize the importance of keeping occupational radiation exposures as low as reasonably achievable. These document include, among others, the plant health physics manual, radiation control instructions, and operating and maintenance procedures. The objectives of ALARA and TVA's commitment thereto are also included in orientation and training sessions for the plant staff. Additionally, the radiation protection staff at the plant has the ALARA concept as an integral part of its activities and the plant health physicist has the clear responsibility for implementating and carrying out the ALARA program at the plant level.

To evaluate the effectiveness of the TVA ALARA program at all levels of conduct, a special interdivisional committee is used. This committee consists of key management and technical staff who have extensive background in inplant radiation control, including such areas as plant layout, shielding, personnel access control, ventilation, waste management, area and personnel monitoring, plant operations, and plant maintenance. The committee periodically audits TVA's overall ALARA program by assessing trends in occupational exposures or other radiation exposure profiles and conducting onsite audits of each plant's ALARA efforts.

49 Additional information is provided in Section 12.3.

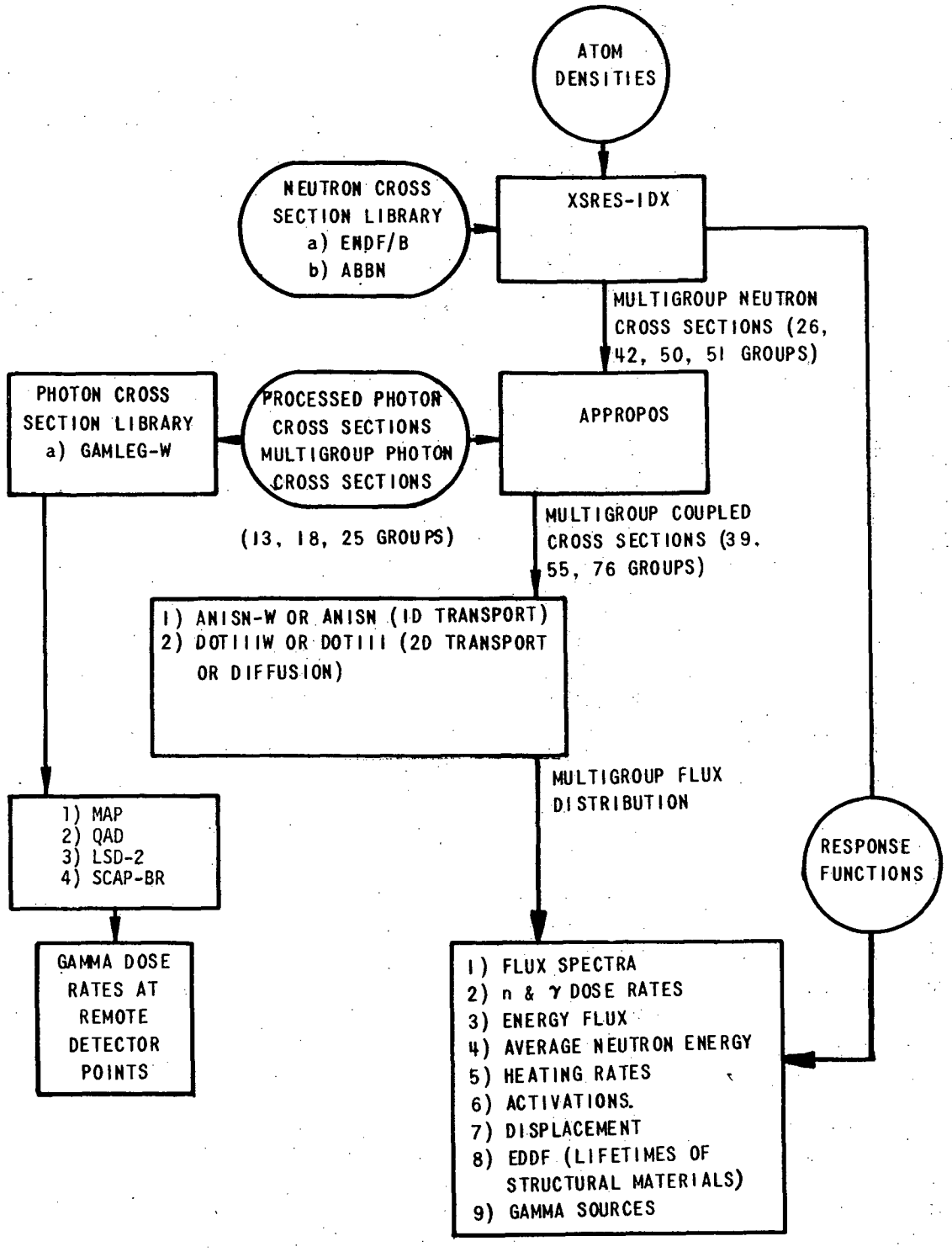

Figure 12.1A-1 Flow Chart of General Analytical Method

6714-22

CLINCH RIVER

BREEDER REACTOR PROJECT

PRELIMINARY SAFETY ANALYSIS REPORT

CHAPTER 13

CONDUCT OF OPERATIONS

PROJECT MANAGEMENT CORPORATION

CHAPTER 13.0 CONDUCT OF OPERATIONS

TABLE OF CONTENTS

		PAGE
13.0	CHAPTER 13.0 CONDUCT OF OPERATIONS	13.1-1
13.1	ORGANIZATIONAL STRUCTURE OF THE APPLICANT	13.1-1
13.1.1	Project Organization	13.1-1
13.1.1.1	Functions, Responsibilities, and Authorities of Project Participants	13.1-1
13.1.1.2	Applicants' In-House Organization	13.1-1
13.1.1.3	Interrelationships with Contractors and Suppliers	13.1-1
13.1.1.4	Department of Energy (DOE) Participation	13.1-1
13.1.1.5	Technical Support for Operations	13.1-1
13.1.1.5.1	TVA's Technical Staff	13.1-2
13.1.1.5.1.1	Division of Nuclear Power (NUC PR)	13.1-2
13.1.1.5.1.2	Other TVA Organizations	13.1-2
13.1.1.5.2	Project Technical Support	13.1-2
13.1.2	Operating Organization	13.1-2
13.1.2.1	Plant Organization	13.1-2
13.1.2.1.1	Operations Section	13.1-3
13.1.2.1.2	Engineering Section	13.1-3
13.1.2.1.3	Mechnical Maintenance Section	13.1-4
13.1.2.1.4	Electrical Maintenance Section	13.1-4
13.1.2.1.5	Instrument Maintenance Section	13.1-4
13.1.2.1.6	Health and Safety Services	13.1-5
13.1.2.2	Personnel Functions, Responsibilities, and Authorities	13.1-5

TABLE OF CONTENTS (Continued)

		PAGE
13.1.2.2.1	Plant Manager	13.1-5
13.1.2.2.2	Assistant Plant Manager	13.1-6
13.1.2.2.3	Operations Supervisor	13.1-6
13.1.2.2.4	Engineering Supervisor	13.1-6
13.1.2.2.5	Mechanical Maintenance Supervisor	13.1-6
13.1.2.2.6	Electrical Maintenance Supervisor	13.1-6
13.1.2.2.7	Instrument Maintenance Supervisor	13.1-7
13.1.2.3	Shift Crew Composition	13.1-7
13.1.3	Qualification Requirements for Nuclear Plant Personnel	13.1-8
13.1.3.1	Qualifications of Plant Personnel	13.1-9
	Figure 13.1-1	13.1-10
	Figure 13.1-2	13.1-11
13.2	TRAINING PROGRAM	13.2-1
13.2.1	Program Description	13.2-1
13.2.1.1	Program Content	13.2-1
13.2.2	Retraining Program	13.2-4
13.2.3	Replacement Training	13.2-4
13.2.4	Records	13.2-4
13.2.4.1	TVA	13.2-4
13.2.4.2	Plant	13.2-5
	Table 13.2-1	13.2-6
	Figure 13.2-1	13.2-11

TABLE OF CONTENTS (Continued)

		PAGE
13.3	EMERGENCY PLANNING	13.3-1
13.3.1	General	13.3-1
13.3.1.1	CRBRP-REP	13.3-1
13.3.1.2	Appendices	13.3-1
13.3.1.3	Additional TVA Plans and Procedures	13.3-2
13.3.1.4	Implementing Procedures	13.3-2
13.3.1.5	State Radiological Emergency Plan	13.3-2
13.3.2	Emergency Organization	13.3-2
13.3.3	Coordination with Offsite Groups	13.3-5
13.3.4	Emergency Action Levels	13.3-6
13.3.5	Protective Measures	13.3-7
13.3.5.1	Plant	13.3-7
13.3.5.2	Offsite	13.3-7
13.3.6	Review and Updating	13.3-7
13.3.7	Medical Support	13.3-8
13.3.8	Exercises and Drills	13.3-8
13.3.9	Training	13.3-8
13.3.10	Recovery and Reentry	13.3-9
13.3.11	Implementation	13.3-9
	Table 13.3-1	13.3-10
	Figure 13.3-1	13.3-11
	Figure 13.3-2	13.3-12

TABLE OF CONTENTS (Continued)

		PAGE
	Appendix 13.3A	13.3A-1
	Table 13.3A-1	13.3A-4
	Table 13.3A-2	13.3A-5
	Figure 13.3A-1	13.3A-6
	Figure 13.3A-2	13.3A-7
	Figure 13.3A-3	13.3A-8
	Figure 13.3A-4	13.3A-9
	Figure 13.3A-5	13.3A-10
	Figure 13.3A-6	13.3A-11
13.4	REVIEW AND AUDIT	13.4-1
13.4.1	Review and Audit - Construction	13.4-1
13.4.2	Review and Audit - Test and Operation	13.4-1
13.5	PLANT PROCEDURES	13.5-1
13.5.1	Administrative Services	13.5-1
13.5.2	Operating and Maintenance Procedures	13.5-1
	Table 13.5-1	13.5-2
13.6	PLANT RECORDS	13.6-1
13.6.1	Plant History	13.6-1
13.6.2	Operating Records	13.6-1
13.6.3	Event Records	13.6-1
13.7	RADIOLOGICAL SECURITY	13.7-1
13.7.1	Organization and Personnel	13.7-1

TABLE OF CONTENTS (Continued)

		PAGE
13.7.1.1	Office of Power	13.7-1
13.7.1.2	Office of Management Services	13.7-1
13.7.1.3	Employee Selection	13.7-1
13.7.1.4	Employee Evaluation	13.7-2
13.7.1.5	Industrial Security Training	13.7-3
13.7.2	Plant Design	13.7-3
13.7.2.1	Design Features	13.7-4
13.7.2.2	Physical Arrangements	13.7-5
13.7.2.3	Owner-Controlled Area	13.7-5
13.7.2.4	Protected Area	13.7-6
13.7.2.5	Vital Equipment and Vital Areas	13.7-6
13.7.2.6	Alarm Station	13.7-7
13.7.2.7	Security Barrier	13.7-7
13.7.3	Security Plan and Contingency Plan	13.7-7
13.7.3.1	Access Control	13.7-7
13.7.3.2	Control of Personnel by Categories	13.7-8
13.7.3.3	Access Control During Emergencies	13.7-8
13.7.3.4	Surveillance of Vital Equipment and Material Access Areas	13.7-9
13.7.3.5	Potential Security Threats	13.7-9
13.7.3.6	Administrative Procedures	13.7-9
13.7.3.7	Test and Inspections	13.7-10
13.7.4	Transportation of Fuel	13.7-10
	Figure 13.7-1	13.7-11

TABLE OF CONTENTS (Continued)

	PAGE
Figure 13.7-2	13.7-12
Figure 13.7-6	13.7-12
Figure 13.7-7	13.7-12
Figure 13.7-8	13.7-12
Figure 13.7-9	13.7-12
Figure 13.7-10	13.7-12
Figure 13.7-11	13.7-12

CHAPTER 13 CONDUCT OF OPERATIONS

LIST OF TABLES

TABLE NUMBER	TITLE	PAGE
13.2-1	Proposed Training Program	13.2-6
13.3-1	Participants in CRBRP Radiological Emergency Plan	13.3-11
13.3A-1	Projected Maximum Resident and Transient Population Distribution Within 10 Miles of the Demonstration Plant for Census Year 1980	13.3A-4
13.3A-2	Projected Maximum Resident and Transient Population Distribution Within 10 Miles of the Demonstration Plant for Census Year 2020	13.3A-5
13.5-1	Preliminary Schedule for O & M Procedures/Instructions	13.5-2

CHAPTER 13 CONDUCT OF OPERATIONS

LIST OF FIGURES

FIGURE NUMBER	TITLE	PAGE
13.1-1	Division of Nuclear Power	13.1-10
13.1-2	CRBRP Organization Chart	13.1-11
13.2-1	Proposed Training Schedule	13.2-11
13.3-1	Relationship of Emergency Centers and Agencies	13.3-11
13.3-2	Location of Technical Support Center, the Operational Support Center, Medical Facilities, and Personnel Decontamination Facilities	13.3-12
13.3A-1	Elapsed Exposure Time to Reach Specific Bone Dose Versus Downwind Distance (Based on Site Suitability Source Term)	13.3A-6
13.3A-2	Elapsed Exposure Time to Reach Specific Lung Dose Versus Downwind Distance (Based on Site Suitability Source Term)	13.3A-7
13.3A-3	Elapsed Exposure Time to Reach Specific Thyroid Dose Versus Downwind Distance (Based on Site Suitability Source Term)	13.3A-8
13.3A-4	Elapsed Exposure Time to Reach Specific Whole Body Dose Versus Downwind Distance (Based on Site Suitability Source Term)	13.3A-9
13.3A-5	Project Area - North Half	13.3A-10
13.3A-6	Project Area - South Half	13.3A-11
13.7-1	CRBRP Security Organization	13.7-11
13.7-2 and 13.7-6 to 13.7-11	Safeguards Information	13.7-12

CHAPTER 13 CONDUCT OF OPERATIONS

LIST OF APPENDICES

APPENDIX NUMBER	TITLE	PAGE
13.3A	Summary of Data Utilized for Source Term Radiological Analysis	13.3A-1

CHAPTER 13.0 CONDUCT OF OPERATIONS

13.1 ORGANIZATIONAL STRUCTURE OF THE APPLICANT

Contract AT (49-18)-12 has been established to design, construct and operate a Liquid Metal Fast Breeder Reactor (LMFBR) demonstration plant. The parties to the contract are the Department of Energy (DOE), the Tennessee Valley Authority (TVA), the Commonwealth Edison Company (CE), and the Project Management Corporation (PMC). The organizational structure of the applicant (DOE, PMC, and TVA) is covered in Section 1.4.

TVA, as part of its lead role responsibility described in Section 1.4, will be responsible for the safe operation of the CRBRP.

13.1.1 Project Organization

13.1.1.1 Functions, Responsibilities, and Authorities of Project Participants

The functions, responsibilities, and authorities of Project participants are described in Sections 1.4 and 1.4.2. The qualification requirements of Project participants are described in Section 1.4.4.

13.1.1.2 Applicants' In-House Organization

This material is covered in Section 1.4.2.

13.1.1.3 Interrelationships with Contractors and Suppliers

This material is covered in Section 1.4.3.

13.1.1.4 Department of Energy (DOE) Participation

The participation of DOE in the Clinch River Breeder Reactor Plant (CRBRP) Project is described in Section 1.4. In addition, DOE participates in R&D in support of the CRBRP Project through its LMFBR base technology programs described in Section 1.5.

13.1.1.5 Technical Support for Operations

TVA's Office of Power will be responsible for carrying out the operator role for the Clinch River Breeder Reactor Plant. Within the TVA Office of Power, the Division of Nuclear Power (NUC PR) will be responsible for the operation and maintenance of the CRBRP. The TVA technical staff supporting the operation of the CRBRP will consist of the Nuclear Central Office (NCO) staff in Chattanooga and also support from other divisions and offices within TVA (Section 13.1.1.5.1). In addition, technical support will be supplied by the CRBRP Project Office, the Lead Reactor Manufacturer of Westinghouse Advanced Reactor Division (W-LRM), and by the AE (Burns and Roe) (Section 13.1.1.5.2).

13.1.1.5.1 TVA's Technical Staff

13.1.1.5.1.1 Division of Nuclear Power (NUC PR)

The Division of Nuclear Power is responsible for the safe, efficient, and environmentally sound operation and maintenance of all TVA nuclear electric generating plants and will have this responsibility for the CRBRP. The organizational structure is shown in Figure 13.1-1.

The Director of Nuclear Power administers the work of the division and is assisted by the Assistant Director; Manager, Nuclear Production; Manager, Technical Support; and supporting staffs.

The Assistant Director assists the director in managing the division and is responsible for directing the work of division managers in the development and maintenance of programs to implement division policy.

The Manager, Nuclear Production is responsible for nuclear production activities including preliminary operations, preoperational testing, power generation, and field services at TVA nuclear generating plants. He will direct these activities of the CRBRP.

The Manager, Technical Support, is responsible for developing and maintaining written programs and providing direct technical support to the TVA nuclear plants in the areas of maintenance and engineering support, quality assurance and compliance, emergency preparedness and protection, industrial safety, and training. He supervises the Manager, Maintenance and Engineering, and the Chiefs of the Quality Assurance and Compliance Branch, the Emergency Preparedness and Protection Branch, and the Training Branch. He will assume these responsibilities for the CRBRP.

13.1.1.5.1.2 Other TVA Organizations

The TVA organization is shown in Figure 1.4-2. These offices/divisions will be available to provide support services to the CRBRP as required.

13.1.1.5.2 Project Technical Support

Project technical support for the operation of the CRBRP will be provided to the Division of Nuclear Power in TVA by the CRBRP Project Office, W-LRM, and Burns and Roe. Areas of support will be in accordance with the responsibilities described in Section 1.4.

13.1.2 Operating Organization

13.1.2.1 Plant Organization

The plant organizational chart is shown in Figure 13.1-2. The principal groups that function directly under the supervision of the Plant Manager and Assistant Plant Managers are the Plant Operations Section, the Plant Engineering Section, the Plant Maintenance Sections (Mechanical,

Electrical and Instrument), and the Health and Safety Services. The CRBRP organization follows the pattern developed through experience and used at TVA nuclear generating plants.

Plant employees will be selected primarily from existing TVA plant staffs and NUC PR's central office. Personnel qualifications shall be in accordance with NRC Regulatory Guide 1.8-1-R-1977.

13.1.2.1.1 Operations Section

The Operations Section will be responsible for all plant operations. It will provide operating personnel to support the preoperational testing, fuel loading, startup testing, startup, and plant operation. It will be responsible for coordinating and scheduling the training program for all operations personnel. It will provide the nucleus of emergency teams such as the plant rescue and fire-fighting organizations.

The Operations Section will be under the direction of the Operations Supervisor who will hold a valid NRC Senior Reactor Operator (SRO) license. He will be assisted by two inline Assistant Operations Supervisors; each will hold a valid NRC SRO license.

There will be five shift crews within the Operations Section to provide 24-hour coverage for operating the plant. The minimum shift crew when the reactor is operating will consist of the Shift Engineer who will hold an NRC SRO license, one Assistant Shift Engineer who will hold an NRC SRO license, two Unit Operators; each will hold an NRC Reactor Operator (RO) license, one Shift Technical Advisor (STA), and two Assistant Unit Operators. One Health Physics Technician and one Radiochemical Laboratory Analyst will also be assigned to each shift. Additional operators will be assigned as necessary. Plant management and technical support will be present or on call at all times.

13.1.2.1.2 Engineering Section

The Engineering Section will be under the direction of the Engineering Section Supervisor. He will be assisted by a complement of engineers. The Engineering Section will be responsible for providing technical direction and staff assistance in the areas of nuclear, mechanical, and chemical engineering. Responsibilities of this section will include plant and equipment performance tests, inplant fuel management, waste management and chemistry control.

The Engineering Section will carry out a comprehensive program of tests, studies, and investigations for the purpose of monitoring the reactor, engineered safeguards, and plant operating conditions to assure compliance with the operating license and to improve the efficiency of the plant. This will include the coordination of the surveillance test program with other plant sections.

13.1.2.1.3 Mechnical Maintenance Section

The Mechanical Maintenance Section will be under the direction of the Mechanical Maintenance Section Supervisor. He will be assisted by an inline Assistant Maintenance Supervisor.

The Mechanical Maintenance Section will be responsible for mechanical maintenance work and inspections in the plant. This will include scheduling and conducting periodic inspections and tests on the systems assigned to this section associated with the reactor and engineered safeguards, as required by the operating license. This section will develop and carry out a preventive maintenance program that assures that the repair and replacement of parts is consistent with the intent of applicable codes and basic requirements of the original equipment. A record file will be maintained by the section on all equipment, inservice tests, inspections, and maintenance reports.

13.1.2.1.4 Electrical Maintenance Section

The Electrical Maintenance Section will be under the direction of the Electrical Maintenance Section Supervisor. He will be assisted by an inline Assistant Maintenance Supervisor.

The Electrical Maintenance Section will be responsible for electrical maintenance work and inspections in the plant. This will include scheduling and conducting periodic inspections and tests on the systems assigned to this section associated with the reactor and engineered safeguards, as required by the technical specifications and operating license. This section will develop and carry out a preventive maintenance program that assures that the repair and replacement of parts is consistent with the intent of applicable codes and basic requirements of the original equipment. A record file will be maintained by the section on all equipment, inservice tests, inspections, and maintenance reports.

13.1.2.1.5 Instrument Maintenance Section

The Instrument Maintenance Section will be under the direction of the Instrument Maintenance Section Supervisor. He will be assisted by two inline Assistant Maintenance Supervisors.

The Instrument Maintenance Section will be responsible for instrument maintenance work and inspections in the plant. This will include scheduling and conducting periodic inspections and tests on the systems assigned to this section associated with the reactor and engineered safeguards, as required by the operating license. This section will develop and carry out a preventive maintenance program that assures that the repair and replacement of parts is consistent with the intent of applicable codes and basic requirements of the original equipment. A record file will be maintained by the section on all equipment, inservice tests, inspections, and maintenance reports.

13.1.2.1.6 Health and Safety Services

This department will consist of two groups which provide services in the Health and Safety Areas. Those units which will report administratively offsite and functionally onsite to the Assistant Plant Manager for Health and Safety Services will consist of Medical, Health Physics, Security, and Power Stores. They will be responsible for Medical Services, Radiological Protection, Plant Industrial Protection, and the procuring, storing, and issuing of items/components needed for the operation and maintenance of the plant. Those units which will report both administratively and functionally onsite to the same Assistant Plant Manager will consist of Industrial Safety and Fire Protection, Compliance, Quality Assurance, Document Control, and Administrative Services. They will have the responsibility for Plant Safety, and the many facets relating to Quality Control and Administrative Control, and ensuring compliance with industry and federal standards and requirements.

13.1.2.2 Personnel Functions, Responsibilities, and Authorities

During normal plant operations, the plant manager will be responsible for all plant activities. In the event of absences, incapacitation of personnel, or other emergencies, the following persons will be responsible in the order listed for all plant activities:

Plant Manager

Assistant Plant Managers

Engineering and Operations

Maintenance

Plant Operating Supervisor

13.1.2.2.1 Plant Manager

The Plant Manager will have direct responsibility for all plant activities. He will be responsible for safeguarding the general public and plant employees from hazards associated with the operation of the CRBRP through implementation of the TVA hazard control standards and requirements, applicable DOE and NRC rules and regulations, and plant procedures; and for adherence to all requirements of the operating license. He will receive direction and supervision from the Director, Division of Nuclear Power and staff assistance from the Division of Nuclear Power Central Office.

13.1.2.2.2 Assistant Plant Manager

There are three Assistant Plant Managers: Assistant Plant Manager for Engineering and Operations; Assistant Plant Manager for Maintenance; and Assistant Plant Manager for Health and Safety Services. These managers will assist the Plant Manager in planning, coordinating, and directing the plant activities under their control. In the absence of the Plant Manager an Assistant Plant Manager will be responsible for management of plant activities as indicated in Section 13.1.2.2.

13.1.2.2.3 Operations Supervisor

The Operations Supervisor will be responsible for the safe and efficient operation of the plant in accordance with the operating license, approved procedures and TVA hazard control standards and requirements. He will be responsible for the preparation and maintenance of up-to-date operating instructions and the preparation of operating records. He will also be responsible for operator training programs and operating personnel schedules and will be charged with the responsibility of keeping the Plant Manager fully informed in all matters of operating significance.

13.1.2.2.4 Engineering Supervisor

The Engineering Supervisor will serve as supervisor of the Engineering Section and as a staff engineer in providing engineering advice and assistance to the Plant Manager. He will be responsible for initiating, planning, and coordinating the technical training programs. His experience and training must provide him with a good understanding of nuclear reactor technology, hazards, safeguards, licensing requirements, and a knowledge of the control systems used in a nuclear plant. He will be responsible for analysis of the performance of the reactor and turbine cycle and associated equipment during the test, startup, and operation of the plant.

13.1.2.2.5 Mechanical Maintenance Supervisor

The Mechanical Maintenance Supervisor will be responsible for all mechanical maintenance work and inspections in the plant. He will be responsible for maintaining safe working conditions for his employees and for their adherence to safe working practices. He will be assisted in his work by an Assistant Supervisor with experience in mechanical maintenance. He will also be assisted by foremen of the various crafts within the section and engineers who will be assigned to the plant as the workload demands. The Mechanical Maintenance Supervisor shall have a thorough knowledge of the operation and maintenance of all plant mechanical equipment.

13.1.2.2.6 Electrical Maintenance Supervisor

The Electrical Maintenance Supervisor will be responsible for all electrical maintenance work and inspections in the plant. He will be responsible for maintaining safe working conditions for his employees and for their adherence to safe working practices. He will be assisted in his work by an Assistant Supervisor with experience in electrical maintenance. He will

also be assisted by foremen of the electrical craft within the section and engineers who will be assigned to the plant as the workload demands. The Electrical Maintenance Supervisor shall have a thorough knowledge of the operation and maintenance of all plant electrical equipment.

13.1.2.2.7 Instrument Maintenance Supervisor

The Instrument Maintenance Supervisor will be responsible for all instrument maintenance work and inspections in the plant. He will be responsible for maintaining safe working conditions for his employees and for their adherence to safe working practices. He will be assisted in his work by two assistant supervisors with experience in instrument maintenance. He will also be assisted by foremen of the Instrument Mechanics within the section and engineers who will be assigned to the plant as the workload demands. The Instrument Maintenance Supervisor shall have a thorough knowledge of the operation and maintenance of all plant instrumentation.

13.1.2.3 Shift Crew Composition

Normal Operations

The Shift Engineer on duty, a SRO, will be in direct charge of the plant including startup, operation, and shutdown of the reactor and ancillary systems. He may institute immediate action in any given situation to eliminate difficulties or remove equipment from service to preclude violation of the operating license or to avert possible injury or undue radiation exposure of personnel.

The Assistant Shift Engineer, a SRO, will be under the immediate supervision of the Shift Engineer. He will follow established procedures in doing his work. However, if a particular situation is not covered by a procedure, he may seek advice from the Shift Engineer; or, if the situation is critical, he may use his own judgment to prevent damage to equipment, injury to personnel, or undue radiation exposure of personnel. The duties of the shift supervisor as identified by NRC will be performed by the assistant shift engineer. The normal work station for the shift supervisor (assistant shift engineer) will be in the control room, but he periodically makes inspections of the plant equipment. He will immediately go to the control room during emergency situations. He will remain in the control room at all times during the accident situations to direct the activities of the unit operator unless formally relieved of this function by the shift engineer.

The shift technical advisor will report to the shift supervisor in the control room during off-normal reactor plant conditions. The role of the shift technical advisor will be to serve in the advisory capacity to the shift supervisor and not to assume command or control functions. The shift supervisor may choose to direct the shift technical advisor to perform his advisory role from either the control room or the onsite technical support center, or the shift supervisor may direct the shift technical advisor to

serve as a liaison between technical support personnel manning the onsite technical support center and the shift supervisor.

Routine duties and assignments of the shift technical advisor will include matters involving engineering evaluation of day-to-day plant operations from a safety point of view.

The Unit Operator who will hold a RO License will be under the immediate supervision of the Assistant Shift Engineer and the general supervision of the Shift Engineer. He will follow established procedures in performing his work. In emergencies when there is not time to get advise from his supervisor he may deviate from established procedures to prevent damage to equipment, injury to personnel, or undue radiation exposure of personnel. He will be responsible for the safe and efficient operation of the plant from the control room or from local control stations.

The Assistant Unit Operator will be under the immediate supervision of the Unit Operator and the general supervision of the Assistant Shift Engineer. He will follow established operating instructions in doing his work and will not deviate from those instructions except as directed. He will perform assigned routine inspections and manipulative operations without close supervision. He will assist in the operation and perform work requirements within defined areas such as the Control Building, Reactor Containment Building, Reactor Service Building, Turbine Generator Building, Diesel Generator Building, Intermediate Building, Steam Generator Building, and Intake Structure.

When on shift, the Radiochemical Laboratory Analyst will be under the functional supervision of the Shift Engineer. These duties consist of periodic sampling of the various systems, such as feedwater and main steam, water makeup, waste condensate, and periodic monitoring of the primary and secondary sodium coolant.

When on shift, the Health Physics Technician will be under the functional supervision of the Shift Engineer. He will perform routine radiation surveys, personnel monitoring activities, and other assigned duties. He will keep the Shift Engineer informed of radiation hazards and performs special surveys as requested.

Minimum Shift Crew Composition

A minimum shift crew will be established for specific plant conditions. These requirements are given in Section 16.6.

13.1.3 Qualification Requirements for Nuclear Plant Personnel

All personnel at the CRBRP will be required to obtain and maintain qualification standards in accordance with NRC Regulatory Guide 1.8-1-R-1977. The personnel selection and training program that assures fulfillment of these qualification requirements also satisfies NRC Regulatory Guide 1.8-1R-1977. In addition, the operation of the CRBRP will

be conducted in accordance with NRC Regulatory Guide 1.33-R2-1978, TMI Action Plan Items, I.C.3 of NUREG-0694-1980, and I.A.1.1 & I.A.1.3 of NUREG-0737-1980.

13.1.3.1 Qualifications of Plant Personnel

The positions of the plant staff have not yet been filled.

FIGURE 13.1-1

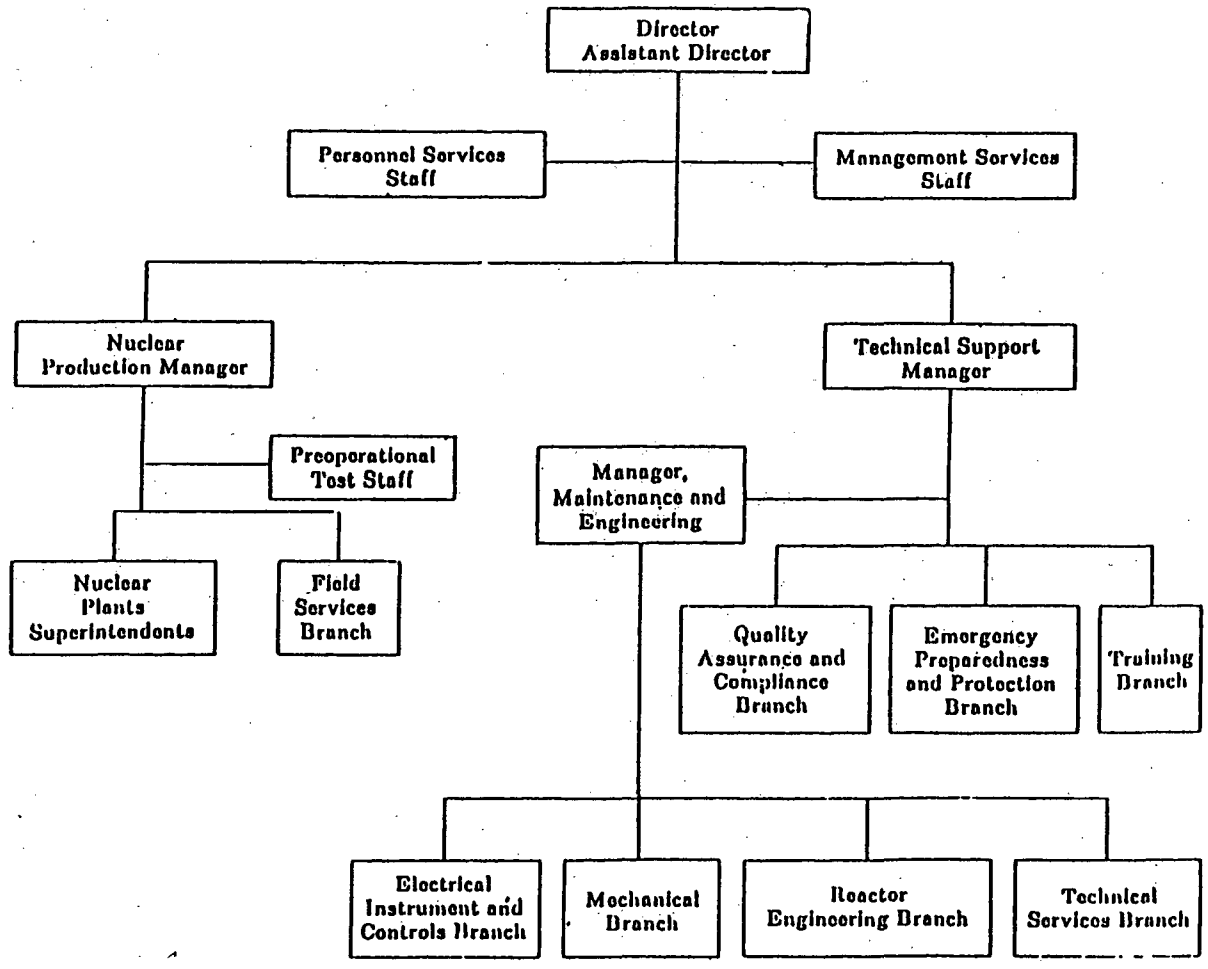

DIVISION OF NUCLEAR POWER

FIGURE 13.1-2
CRBRP ORGANIZATIONAL CHART

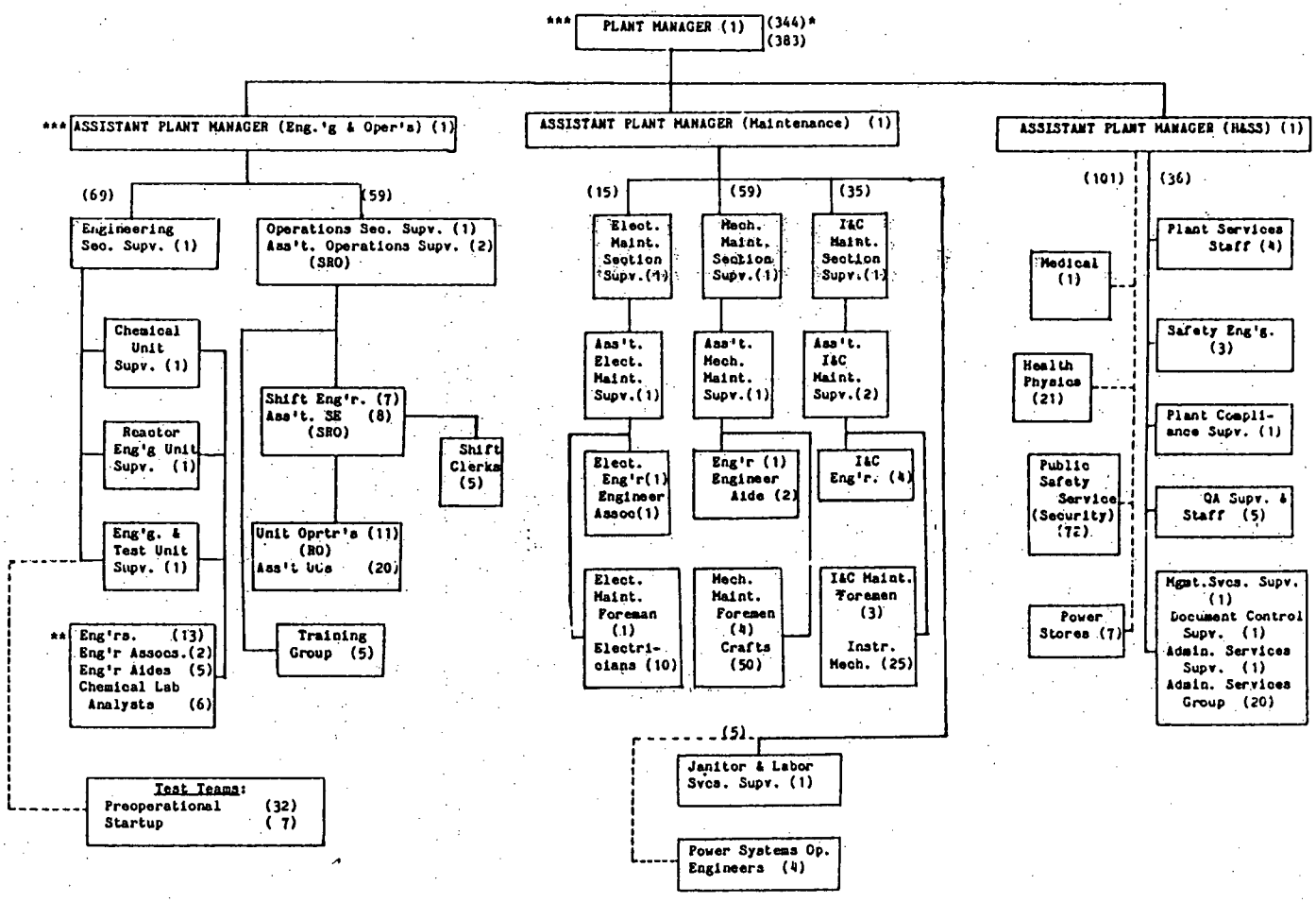

NOTE: Dash line indicates Functional Supervision;
-- Solid line indicates Functional & Administrative.
-- Information based on latest staffing plans.
-- The numbers indicate requirements for normal operation.
-- There will be five operating shifts.

* Test Teams (39) will transfer offsite 1-2 years after criticality.
** The Shift Technical Advisors (STA) are included here.
*** Will take training but not necessarily the NRC Exam.

2/2/82

13.2 TRAINING PROGRAM

13.2.1 Program Description

An onsite formal training program will be conducted prior to initial fuel loading.

The basic objectives of the training program are:

a. To assure that all plant personnel are properly trained and qualified to perform their assigned tasks in a safe and efficient manner.

b. To assure that the CRBRP is operated in accordance with NRC regulatory requirements and guidelines.

c. To assure that all training is formally documented.

d. To meet or exceed NRC licensing requirements.

In achieving these objectives, individual training needs will be established by comparing job requirements with individual experience.

The training program, as it is initially planned, will be approved by the Manager, Technical Support, after being approved by the Plant Manager. The properly planned and approved program will ensure that the content and the intent of the training program provides the necessary training for personnel associated with reactor operations. The program will be designed to train personnel both with and without previous nuclear experience. It will consist of both formal classroom-type lectures, self-study assignments, on-the-job training, and progress evaluation. This program will be the mechanism to ensure that all members of the plant operating staff are qualified for the assigned position prior to initial fuel loading.

The effectiveness of the training program will be evaluated by the performance of employees on TVA and NRC examinations in carrying out their assigned duties and by periodic evaluations of performance by supervisors. In addition, periodic audits of the training program will be performed by designees within the Office of Power, but outside the Division of Nuclear Power.

13.2.1.1 Program Content

At the time of manning the CRBRP, TVA should have highly trained nuclear plant operating personnel at the Browns Ferry, Sequoyah, Watts Bar, and Bellefonte Nuclear Plants. These plants will be the primary source of personnel for the CRBRP.

Those positions at the CRBRP which require an NRC licensed SRO will be filled by personnel who have or are eligible to sit for an NRC SRO license on a light-water reactor power plant. Other positions will be filled by personnel within the TVA organization as available and selected from

competent applicants from outside TVA. All CRBRP personnel will be given comprehensive training to produce personnel who have that combination of education, experience, and skills commensurate with their level of responsibility. This will provide reasonable assurance that decisions and actions during all normal and off-normal conditions will be such that the plant is operated in a safe and efficient manner.

The program will meet the guidelines and requirements of 10 CFR 55-1980, TMI Action Plan Items, I.A.1.1, I.A.2.1, I.A.2.3, I.A.3.1, and II.B.4 of NUREG-0737-1980, NRC Regulatory Guides 1.149-1981 and 1.8-1-R-1977, Item I.A.4.2 of NUREG-0718-R2-1982, and BTP CMEB 9.5-1-R3-1981.

Emphasis is placed on simulator use as an integral part of the training program. A plant-specific simulator will be available for the CRBRP to be located onsite and operational at the time of commencing preoperational testing. It will serve as a device for procedure checkout as well as a vital component of the operator training program. The training program for all candidates seeking NRC SRO and RO licenses will include significant time at the simulator. Selected personnel in the non-NRC licensed category will also receive training at the simulator. The simulator will accurately reproduce the general operating characteristics of the CRBRP, and the arrangement of the instrumentation and controls of the simulator will closely parallel that of the CRBRP.

The program will provide training for the following categories:

a. Individuals with no previous power plant experience
b. Individuals with no previous nuclear power plant experience
c. Individuals who have had nuclear experience but not NRC licensed
d. Individuals who hold, or have held, an NRC license for a LWR facility or a facility comparable to CRBRP
e. Individuals who will obtain an NRC SRO or RO 'cold' license
f. Individuals who will obtain an NRC SRO or RO 'hot' license
g. Individuals who will take the training for an NRC license but may <u>not</u> take the NRC exam [e.g. The Plant Manager or Assistant Plant Manager (Engineering and Operation) and the Shift Technical Advisor]
h. Individuals who will <u>not</u> be taking the license-type training, i.e., all plant staff whose positions do not require an NRC license

Table 13.2-1 includes detailed information on the training program, such as: Subject matter of each course, the duration of the course, the organization teaching the course, and the position titles for which the course will be given. Figure 13.2-1 presents a proposed training schedule for the CRBRP staff which is in accordance to NRC Regulatory Guide 1.8-1-R-1977. It is planned that the following personnel will obtain a 'cold' license in accordance with the requirements of 10 CFR 55-1980 before initial fuel loading: SRO license for the Operations Supervisor, at least five Shift Engineers, and at least five Assistant Shift Engineers; and obtain RO licenses for at least ten Unit Operators. The Plant Manager or the Assistant Plant Manager will obtain the training required for an SRO license. Since the 'cold' license will be obtained prior to criticality,

that part of the training consisting of actual startups will be performed at a research or power reactor and the control manipulations will be performed at the CRBRP- Specific simulator substituting for the real plant.

Under NRC procedures for determining the eligibility of an applicant to take a cold examination, the applicant is considered to have had extensive operating experience at a comparable facility if one of the following four conditions have been met:

a. Holding or having held an operator's or senior operator's license at a comparable licensed reactor facility. To date, NRC has considered any light water power reactor as comparable to any other light water power reactor. However, it is highly desirable that previously licensed individuals participate in a short course utilizing a nuclear power plant simulator similar to the facility for which the applicant will be seeking a license.

b. Determination of such experience as indicated in a. above at a comparable reactor facility not subject to NRC licensing (e.g., reactor facilities operated by the military services or owned by the Department of Energy (DOE).

c. The applicant has passed an NRC-administered written examination and operating test at a comparable licensed reactor facility after completing an NRC approved training program. Normally, the Commission issues a certification stating that the individual has met the requirements of an operator as set forth in 10 CFR 55-1980 in lieu of a license.

d. Certification of satisfactory completion of an NRC-approved training program which utilizes a nuclear power plant simulator as part of the program.

The non-NRC licensed personnel will also undergo training both prior to and after assignment to the CRBRP. The training program in which these employees participate prior to CRBRP assignment will include formal programs at TVA's Power Operations Training Center (POTC), TVA Administrative and Standards of Apprenticeship, or approved equals. After assignment to CRBRP the training will be commensurate with the individual's experience and job assignment and will follow the guidelines of Item I.A.2.2 of NUREG-0660-1980, and be conducted in accordance to NRC Regulatory Guide 1.8-1-R-1977.

The training of personnel for the position of Shift Technical Advisor (STA), a non-NRC licensed position, is specifically addressed because the STA serves the important function of technical advisor to the Shift Supervisor. The details of the STA training in the CRBRP Training Program when developed at the FSAR stage will be in accordance with TMI Action Item I.A.1.1 of NUREG-0737-1980.

A fire protection training program will be developed prior to fuel loading and will meet the guidelines of CMEB 9.5-1-R3-1981 as applicable to CRBRP, and include details such as interface requirements between the Plant

Operator and the Plant Constructor. The fire protection program of the Constructor will be the basis for the construction force fire-protection training. On occasions of interface between construction and operations in areas under control of operations, the involved construction personnel will be oriented on the applicable portion of the Operator's fire protection program. The fire prevention and protection program for plant operation will use the fire brigade system with properly trained personnel on each shift. The program will be formulated by the Safety and Fire Protection Engineer who will have had, prior to his assignment to the CRBRP Project, formal training in the areas of safety and fire protection engineering from an accredited school, college, or university. The post-CRBRP training will include plant-system familiarization and the techniques to be employed in preventing, detecting, control, and fighting of sodium and sodium-potassium fires.

The individual tasks and the various components of each position will be examined to identify the knowledge, skill, physical ability, duties, and responsibilities required for the individual to accomplish his or her job. In addition, the performance standards to be met in completing the task will be identified. This will be achieved by developing job descriptions for the positions and evaluating performance records of incumbents in similar positions before the positions at the CRBRP are filled.

The actual training program and schedule for the plant operating staff will be designed around the findings of a job/task analysis. Hence, the schedule is tentative and subject to change before submission as a part of the Final Safety Analysis Report.

13.2.2 Retraining Program

This information will be included in the FSAR.

13.2.3 Replacement Training

This information will be included in the FSAR.

13.2.4 Records

13.2.4.1 TVA

Official records of employee qualifications, experience, training, and retraining of each member of the plant organization are maintained in the official TVA Personal History Record (PHR) by the Division of Personnel. The PHR provides in a standardized arrangement, the information officially recognized in recording and supporting employee status. The PHR is maintained in current and accurate status and is controlled as to availability. The material admitted to this record is restricted to items for which authenticity has been confirmed through established procedures; for example, official TVA forms, signed statements from the employee, and management representatives. The official records, as identified above, of each TVA employee on the CRBRP Staff will be maintained in the PHR.

13.2.4.2 Plant

Records supporting requests for NRC SRO and NRC RO licenses will be maintained in the plant master file. These records will include training courses attended, retraining classes, number of reactor startups, and other information necessary to ensure that training requirements have been met. Some of these records will be duplicated in the PHR.

A training file for each member of the plant organization will be maintained in the plant master file. Information regarding participation in training and retraining activities and records of employee participation in training activities leading to promotion to a higher level of competence will be maintained in this training file.

TABLE 13.2-1
PROPOSED TRAINING PROGRAM

Subject Areas & Composition	Duration	Organization Teaching	Position Receiving Training
Candidates for NRC-License			
I. LMFBR & CRBRP-Specific Technology o Basic differences between LWRs and LMFBRs o Principles of Operation o Design Features o General Operating Characteristics o Reactor Instrumentation & Control o Specific subjects in 10CFR55-1980, Sections 21 and 22, and NUREG-0737-1980 o Heat Transfer, Fluid Flow, & Thermodynamics o Use of plant systems to control or mitigate an accident in which the core is damaged o Reactor & Plant transients	6 weeks	Onsite by Staff specialists	Plant Manager Assistant Plant Managers Operations Section Supervisors Shift Engineers Assistant Shift Engineers Unit Operators (Although the STA is a non-NRC licensed position, the STAs will receive this training.)
II. Sodium & Sodium Potassium Handling A. Offsite 1. Sodium Systems 2. Sodium System Components 3. Engineering Properties of Sodium 4. Corrosion, Mass Transfer, and Chemical Instrumentation 5. Materials Selection 6. Sodium Instrumentation and Electrical Systems 7. Operational Consideration 8. Maintenance 9. Sodium Safety	2-3 weeks	Offsite at Vendors Training Center	Selected members of Manager's Staff and Operating Section.
B. Onsite 1. Sodium Systems 2. Sodium System Components 3. Engineering Properties of Sodium 4. Corrosion, Mass Transfer, and Chemical Instrumentation 5. Materials Selection 6. Sodium Instrumentation and Electrical Systems 7. Operational Consideration 8. Maintenance 9. Sodium Safety	4 weeks	Onsite by Selected Staff Members who attended the offsite course	Plant Managers Assistant Plant Managers Operations Section Supervisors Shift Engineers Assistant Shift Engineers Unit Operators (Those of above who did not take the offsite course.)
III. CRBRP Plant Systems Lecture Series Includes lectures on details of each of the plant systems	20 weeks	Onsite by Engineers from Engineering Section who have become specialists in the systems	All personnel for plant positions who receive training for NRC license

TABLE 13.2-1 (Cont'd.)
PROPOSED TRAINING PROGRAM

Subject Areas & Composition	Duration	Organization Teaching	Position Receiving Training
Candidates for NRC License (Cont'd.)			
IV. Observation Training 1. LMFBR Plant Familiarization 2. Operating Evaluations 3. Liquid Metal Systems 4. Inert Gas Systems 5. Characteristics of an Operating LMFBR 6. FFTF Simulator (for LMFBR Familiarization)	up to 6 months	Offsite at an operating LMFBR	All personnel for plant positions who will receive training for NRC license.
V. Health Physics 1. Radiation Exposure Limits 2. Radiation 3. Special Work Permits 4. Contamination Control 5. Airborne Activity 6. Injuries in Contamination or Radiation Areas 7. Handling, Storage, and Transfer of Radioactive Materials 8. Safe Practices 9. REP for CRBRP	2 weeks	Onsite by Health Physics Supervisor	Plant Managers Assistant Plant Managers Operations Section Supervisors Shift Engineers Assistant Shift Engineers Unit Operators
VI. Work/Study Assignments TVA Management/Superv. Skills TVA Administrative Controls	1 week	Offsite personnel from TVA's Central Office	Selected positions such as Plant Managers, Assistant Plant Managers, Operations Section Supervisors, Shift Engineers, Assistant Shift Engineers, Unit Operators --
Operating Practices o Reactor Startups, Operating Instruction Preparation Sodium Load, Preoperational Tests Fuel Load, Plant Procedures	18 months	Onsite by Training Coordinator	Plant Managers, Assistant Plant Managers, Operations Section Supervisors, Shift Engineers, Assistant Shift Engineers, Unit Operators --
o CRBRP-Specific Simulator Training	200 hours		
o CRBRP-Control Room Operational	480 hours		
o 3 months on shift as licensed Operator	3 months		(For Candidates for 'hot' license only)
o Self-directed study	6 months		
VII. Pre-NRC License Examination o Operator Administered Exam o Inplant Briefing o Pre-license examination review	1 week 1 week 2 weeks	Onsite by Training Coordinator	All who are taking NRC examination

PROPOSED TRAINING PROGRAM

Subject Areas & Composition	Duration	Organization Teaching	Position Receiving Training
Candidates for NRC-License (Cont'd.)			
VIII. NRC License Examination Written Operating (to include simulator examination)	1 week	Onsite by Training Coordinator	Only those on the Manager's Staff and in Operating Section that are obtaining NRC license
IX. General Employee Training 1. Familiarization with Plant-Specific administrative procedures and plans to enable trainee to demonstrate knowledge in those areas of trainee's specialty. 2. Radiological Health & Safety 3. Industrial Safety 4. Plant-Controlled Access Areas and Security Procedures 5. Use of Protective Clothing and Equipment 6. Plant Quaity Assurance Program 7. Fire Protection Program 8. Plant Cleanliness and Housekeeping Requirements 9. General Description of Plant and Facilities 10. CRBRP REP	4 weeks	Onsite personnel by specialists in subject disciplines.	Plant Managers, Assistant Plant Managers, Operations Section Supervisors, Shift Engineers, Assistant Shift Engineers, Unit Operators
X. CRBRP Emergency Instructions	1 week	Onsite-by staff specialist	Plant Managers, Assistant Plant Managers, Operations Section Supervisors, Shift Engineers, Assistant Shift Engineers, Unit Operators
XI. Fire Brigade Training	1 week	Onsite-by staff specialist	Plant Managers, Assistant Plant Managers, Operations Section Supervisors, Shift Engineers, Assistant Shift Engineers, Unit Operators
Non-NRC Licensed Personnel			
I. LMFBR & CRBRP-Specific Technology Contents of course for non-licensed personnel will be tailored to specific disciplines	3 weeks	Onsite by specialists	Selected technical and supervisory personnel
II. Sodium & Sodium-Potassium Handling A. Offsite 1. Sodium Systems 2. Sodium System Components 3. Engineering Properties of Sodium 4. Corrosion, Mass Transfer, and Chemical Instrumentation 5. Materials Selection 6. Sodium Instrumentation and Electrical Systems 7. Operational Consideration 8. Maintenance 9. Sodium Safety	3 weeks	Offsite at Vendor's Training Center	Selected technical and supervisory personnel

TABLE 13.2-1 (Cont'd.)
PROPOSED TRAINING PROGRAM

Subject Areas & Composition	Duration	Organization Teaching	Position Receiving Training
Non-NRC Licensed Personnel (Cont'd.)			
B. Onsite 1. Sodium Systems 2. Sodium System Components 3. Engineering Properties of Sodium 4. Corrosion, Mass Transfer, and Chemical Instrumentation 5. Materials Selection 6. Sodium Instrumentation and Electrical Systems 7. Operational Consideration 8. Maintenance 9. Sodium Safety	4 weeks	Onsite by Engineers from Engineering Section who attended the offsite course	Selected Technical and Supervisory personnel
III. CRBRP Plant Systems Lecture Series Includes lectures on plant systems details	up to 20 weeks	Onsite by Engineers from Engineering Section who have become specialists in the systems	Selected personnel depending on their assigned position
IV. Health Physics & Safety	2 weeks	Onsite by the Health Physics Supervisor	All plant personnel including those on temporary assignment
V. Observation Training Training at an Operating LMFBR with content oriented to specific disciplines	up to 6 months	Offsite at an operating LMFBR	Selected members of maintenance supervision and of technical disciplines from the Engineering Section
VI. Onsite Work/Study Assignments o CRBRP Familiarization & Orientation o Developing Plant Procedures o Studying Plant Layout & Design o Technical Training in areas of Chemistry, Nuclear, Electrical, Instrumentation and Control o Basic Simulator Training o Supervisory Training TVA Management/Supervisory Skills TVA Administrative Controls o CRBRP-Specific Simulator Exercises o Participation in Preoperational & Startup Testing	52 weeks	Onsite by staff specialists	Selected technical and supervisory personnel
VII. General Employee Training 1. Familiarization with Plant-Specific administrative procedures and plans to enable trainee to demonstrate knowledge in those areas of trainee's specialty. 2. Radiological Health & Safety 3. Industrial Safety	4 weeks	Onsite personnel by specialists in subject disciplines	All plant personnel including those on temporary assignment

TABLE 13.2-1 (Cont'd.)
PROPOSED TRAINING PROGRAM

Subject Areas & Composition	Duration	Organization Teaching	Position Receiving Training
Non-NRC Licensed Personnel (Cont'd.)			
4. Plant-Controlled Access Areas and Security Procedures			
5. Use of Protective Clothing and Equipment			
6. Plant Quaity Assurance Program			
7. Fire Protection Program			
8. Plant Cleanliness and Housekeeping Requirements			
9. General Description of Plant and Facilities			
10. CRBRP REP			
VIII. CRBRP Emergency Instructions	1 week	Onsite-by staff specialist	All plant personnel including those on temporary assignment
IX. Fire Brigade Training	1 week	Onsite-by staff specialist	All permanently assigned plant personnel who may at sometime be a member of the fire brigade

Months Prior to Fuel Load ( )

	NRC License
PLANT MANAGER	D
ASSISTANT PLANT MANAGER	
ENGINEERING & OPERATIONS	D
MAINTENANCE	-0-
HEALTH & SAFETY SERVICES	-0-
OPERATIONS SUPERVISOR	SRO
ASSISTANT OPERATIONS SUPERVISORS	SRO
SHIFT ENGINEER	SRO
ASSISTANT SHIFT ENGINEER	SRO
UNIT OPERATOR	RO
ASSISTANT UNIT OPERATOR	-0-
ENGINEERING SUPERVISOR	D
CHEMICAL ENGINEER	-0-
MECHANICAL ENGINEER	-0-
NUCLEAR ENGINEER	-0-
SHIFT TECHNICAL ADVISOR	D
STARTUP CREW FROM CENTRAL OFFICE	-0-
CHEMICAL ENGINEER	-0-
MECHANICAL ENGINEER	-0-
NUCLEAR ENGINEER	-0-
MAINTENANCE SUPERVISOR (ELECTRICAL)	-0-
ASSISTANT SUPERVISOR	-0-
MAINTENANCE SUPERVISOR (MECHANICAL)	-0-
ASSISTANT SUPERVISOR	-0-
MAINTENANCE SUPERVISOR (INSTRUMENT)	-0-
ASSISTANT SUPERVISOR (INSTRUMENTATION)	-0-
ASSISTANT SUPERVISOR (INST.-COMPUTER)	-0-
INSTRUMENT ENGINEER	-0-
HEALTH & SAFETY SERVICES DEPARTMENT	
QUALITY ASSURANCE SUPERVISOR	-0-
QUALITY ASSURANCE ENGINEER	-0-
OTHERS INCLUDING:	
SAFETY & FIRE PROTECTION ENGINEER	-0-
INDUSTRIAL ENGINEER	-0-
PREOPERATIONAL TEST TEAM	
TEST COORDINATOR	-0-
TEST DIRECTOR	-0-
TEST ENGINEER	-0-

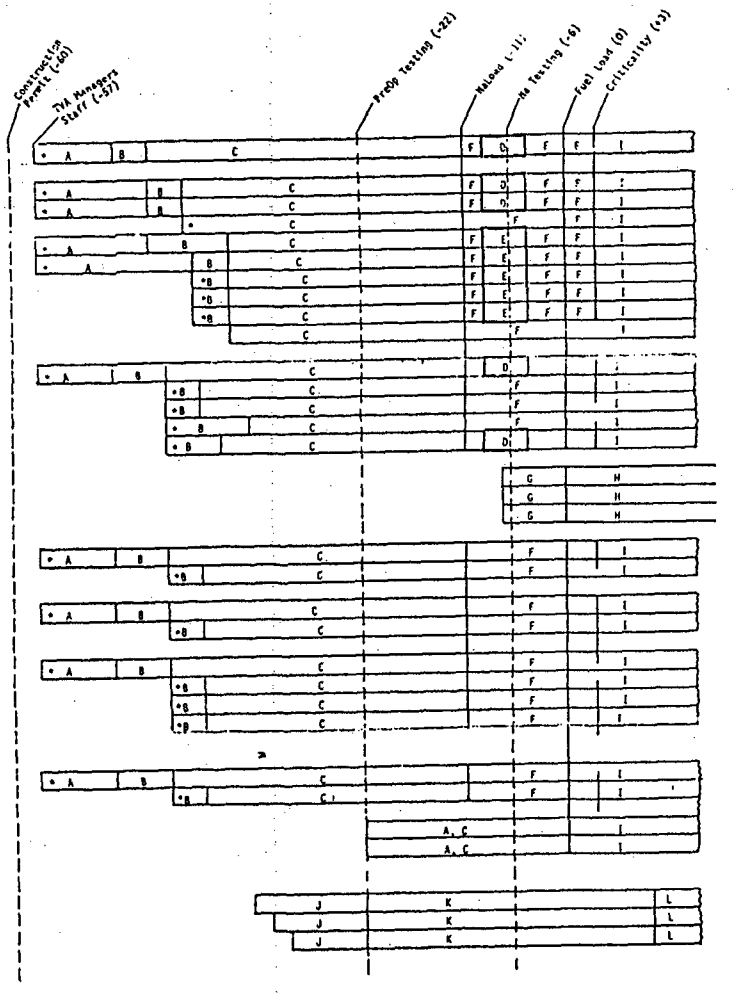

LEGEND:

- * - Assignment to CRBRP Project
- A - Onsite Familiarization
- B - Assignment to Operating LMFBR
- C - Onsite Training Program (See Table 13.2-1 for details)
- D - Intensive Operator Licensing Activities - W/O NRC Exam
- E - Intensive Operator Licensing Activities - With NRC Exam
- F - Sodium Load & Fuel Loading
- G - Assignment Onsite for Startup Familiarization
- H - Assignment As Member of Startup Crew Assisting Operations with Assigned Duties
- I - Startup Tests and Operation During Demonstration Period
- J - Assigned Onsite for Familiarization and Preparation of Preoperational Test Procedures
- K - Performing Preoperational Tests
- L - Return to Central Office

FIGURE 13.2-1
PROPOSED TRAINING SCHEDULE

13.3 EMERGENCY PLANNING

13.3.1 General

The Clinch River Breeder Reactor Plant Radiological Emergency Plan (CRBRP-REP) will be developed to provide protective measures for Plant personnel, and to protect the health and safety of the public in the event of a radiological emergency resulting from an inplant accident or an accident involving transportation of radioactive waste from Clinch River Breeder Reactor Plant. This plan fulfills the requirements set forth in 10 CFR 50-1982 that an emergency plan be included in the Preliminary Safety Analysis Report and be developed in accordance with the Nuclear Regulatory Commission (NRC) and Federal Emergency Management Agency (FEMA) guidance. As specified in NUREG-0654-R1-1980, Criteria for Preparation and Evaluation of Radiological Emergency Response Plans and Preparedness in Support of Nuclear Power Plants, the CRBRP-REP will ensure that:

1. Adequate measures are taken to protect employees and the public.

2. All individuals having responsibilities during an accident are properly trained.

3. Procedures exist to provide the capability to cope with a spectrum of accidents ranging from those of little consequence to major core melt.

4. Equipment is available to detect, assess, and mitigate the consequences of such occurrences.

5. Emergency action levels and procedures are established to assist in making decisions.

The Radiological Emergency Plan will consist of the CRBRP-REP and appendices.

These documents are briefly described below. The actual CRBRP-REP will be submitted as a separate document prior to fuel loading.

13.3.1.1 CRBRP-REP

This document will address general organizational responsibilities, capabilities, actions, and guidelines for TVA and project personnel during a radiological emergency.

13.3.1.2 Appendices

Specific information on each of the TVA emergency centers (for the CRBRP these centers will serve as Emergency Operations Facilities) will be included as appendices to the CRBRP-REP. These appendices will detail facility features, capabilities, equipment protective actions, and responsibilities. The CRBRP-REP, together with the appendices, will describe the methods TVA will use to:

1. Detect an emergency condition

2. Evaluate the severity of the problems

3. Notify Federal, State, and local agencies of the condition

4. Activate emergency organizations

5. Evaluate the possible offsite consequences

6. Recommend protective actions for the public

7. Mitigate the consequences of the accident

Since TVA has no authority outside the plant boundaries, State and local radiological emergency plans will support the CRBRP-REP. State and local agencies are responsible for ordering and implementing actions offsite to protect the health and safety of the public. The plans for State and local agencies will be incorporated as Appendix F to the CRBRP-REP.

13.3.1.3 Additional TVA Plans and Procedures

The CRBRP-REP will compliment the following:

1. Spill Prevention Control and Countermeasure Plan

2. Physical Security Plans (which include fire protection)

3. Plant Equipment Normal, Abnormal, and Emergency Operating Instructions

4. Plant Surveillance Instructions

13.3.1.4 Implementing Procedures

Specific procedures will be developed to ensure that accidents are properly evaluated, rapid notifications made, and assessment and protective actions performed. These procedures will be compiled in the Clinch River Breeder Reactor Plant Implementing Procedures Document (CRBRP-IPD).

Plant instructions for normal and emergency system operation and control will exist but will not be included in the CRBRP-IPD. These plant operating instructions will be designed to ensure that operators implement the procedures specified in CRBRP-IPD.

13.3.1.5 State Radiological Emergency Plan

The State of Tennessee Radiological Emergency Plan as well as the plan for that portion of the State of North Carolina within the 50-mile ingestion pathway will be included in Appendix F of the CRBRP-REP.

13.3.2 Emergency Organization

The plant manager will be in charge of all activities at the site and will have assistant managers to share his responsibilities as he deems necessary. The minimum staffing requirements for operation will be found in the Plant

Technical Specifications. The responsibilities of the minimum staff under normal operations will be as outlined in the PSAR. Under emergency conditions the responsibilities of the minimum staff will be unchanged. The site emergency organization will augment the shift operations crew in accordance with NUREG-0654-R1-1980, Table B-1. If members of the site emergency organization are not present when an emergency occurs, the shift engineer on duty will be designated the Site Emergency Director until relieved by the plant manager or his alternate. The duties and responsibilities of the various plant supervisors concerning plant emergencies will be outlined in the CRBRP-REP.

An on-site Technical Support Center (TSC) will be provided in accordance with 10 CFR 50 Appendix E-1982 and NUREG-0696-1981, "Functional Criteria for Emergency Response Facilities". The TSC will perform the following functions:

- Monitor plant operations and provide technical advice and overall plant management from a non-control room location
- Supply sufficient plant information for analysis of plant status and extent of any plant damage including the Safety Parameter Display System (SPDS) described in Section 7.5.14
- Record sufficient information to allow for a thorough review of plant incidents and to aid in plant recovery
- Provide communications with off-site personnel and provide for other peripheral functions not directly related to reactor operations
- Relieve control room congestion

In order to provide these functions, the TSC will be located on the 831 level of the controll building (see Figures 1.2-71 and 1.2-75) in close proximity to the control room. Access to the TSC during an emergency will be limited to those persons identified in the REP. The TSC will provide adequate working space for the identified support personnel and required support equipment. The TSC will be capable of being staffed and functional within approximately 30 minutes of an emergency. Radiological protection from airborne radioactivity and plant sources will be provided.

The TSC is included within the Control Room Habitability Zone described in Section 9.6.1.1.1 and 9.6.1.2.1 of the PSAR. Four CRTs of the Plant Data Handling and Display System described in Section 7.8 of the PSAR will be used to provide sufficient information for analysis of plant status.

An on-site Operational Support Center (OSC) will provide a location where support personnel can assemble and where support can be coordinated and will provide communication with the control room and the TSC. The location of the OSC will be in the lunch room area of the plant services building (See PSAR Figures 13.3-2 and 1.2-89). The OSC will have access to equipment necessary to support the plant emergency response.

The on-site CRBRP emergency plant organization as indicated in Figure 13.3-3 will be supported by the staffs of four emergency centers: the Central

Emergency Control Center (CECC) Staff and the Division of Nuclear Power Emergency Center (DNPEC) Staff in Chattanooga, Tennessee; the Muscle Shoals Emergency Control Center (MSECC) Staff in Muscle Shoals, Alabama; and the Knoxville Emergency Control Center (KECC) Staff in Knoxville, Tennessee. The CECC will function and provide all services as a 'near-site' Emergency Operations Facility. In addition, the offsite emergency organization will be supported by other TVA organizations as may be required.

The director of each center is responsible for directing his staff in carrying out their respective responsibilities. He is delegated the authority during emergencies to locate, direct, and dispatch the personnel and equipment necessary to carry out his staff's responsibilities.

The purpose of the CECC and associated CECC staff is to provide the facilities and manpower for evaluating, coordinating, and directing the overall activities involved in coping with a radiological emergency.

During an emergency, the CECC Director and his staff will review the response to the emergency by TVA and the appropriate State agencies to ensure that an effective and cooperative effort is being made. The CECC Director, after consultation with the Office of Health and Safety CECC representative, is responsible for providing TVA's recommended protective actions to the appropriate State officials.

The CECC staff will coordinate with all other TVA emergency centers to ensure an effective TVA effort in response to an accident situation. The CECC staff will also provide an accurate description of the emergency situation for TVA management and public information. In addition, the CECC will coordinate with offsite Federal agencies, such as the Nuclear Regulatory Commission (NRC) and Department of Energy (DOE), to ensure availability of additional outside resources to TVA.

The DNPEC staff provides support services during a radiological emergency to the affected plant. Support services may be provided by utilizing any necessary manpower and equipment under the direct control of the Division of Nuclear Power. If the division is unable to provide adequate services or support, requests will be made for additional support to other TVA divisions, local agencies, or government installations as may be required.

The Muscle Shoals Emergency Control Center (MSECC) supports the CECC by performing environmental radiological monitoring and dose assessments and by recommending protective actions for the public to the CECC. In performing these functions, the MSECC assists the Tennessee Department of Public Health in evaluating the population exposures resulting from radiological emergencies. Real-time meteorological data will be used in dose assessment related to actual and potential releases of radioactivity. The MSECC staff directs offsite environmental monitoring for the Tennessee Department of Public Health and continues monitoring activities until a State Field Coordination Center is established to coordinate the offsite environmental monitoring effort. The MSECC will continue to evaluate the need for monitoring assistance to the Tennessee Department of Public Health. The State may request assistance from the appropriate DOE Operations Office in accordance with Interagency Radiological Assistance Plan (IRAP) for additional support. The MSECC will monitor the radiation protection problems in the plant during emergencies to provide guidance, manpower, and equipment to the Plant Health Physicist as required to control and mitigate these problems.

The Knoxville Emergency Control Center (KECC) serves as the focal point for all essential support activities involving TVA Knoxville offices. The TVA Office of Engineering Design and Construction (OEDC), Division of Engineering

Design (EN DES), has been delegated overall responsibility for the KECC and for providing technical support during and following a radiological emergency.

This section addresses the EN DES responsibilities for technical support during emergency conditions.

The KECC also serves as the communication center for other essential TVA offices such as the TVA Board of Directors, the General Manager, the Nuclear Safety Review Staff, and the Information Office.

Real-time meteorological data will be available in the Control Room, Technical Support Center, CECC, MSECC, and State of Tennessee Emergency Operations Center.

The radiological emergency communications network will consist of a combination of commercial telephone circuits, radio, and microwave circuits. South Central Bell Telephone Company lines will be used as the primary means of communications during radiological emergency situations between plant, CECC, DNPEC, MSECC, KECC, and appropriate Federal and State agencies. This system will be augmented by the TVA Private Automatic Exchange (PAX). Hard copy data transmission will be accomplished by facsimile from the CRBRP to the DNPEC, the CECC, and the MSEC. The hard copy transmission is then followed up and verified by redundant telephone communications. TVA will provide the necessary interfaces to the CRBRP Technical Support Center Data System for transmission of necessary data to TVA emergency centers, as appropriate.

The primary means of notification of plant and offsite personnel is the commercial telephone circuits. Additionally, pocket pagers are provided to certain key individuals in the emergency organization.

Figure 13.3-1 illustrates the relationship between the TVA emergency centers and depicts the interface among TVA, Federal, State, and local agencies.

13.3.3 Coordination With Offsite Groups

TVA will have agreements with other Federal agencies to assist in the evaluation and control of any radiological emergency. These agreements will include such agencies as the Department of Energy (DOE), Oak Ridge Operations Office, and the National Aeronautics and Space Administration (NASA), Marshall Space Flight Center. The CECC staff may request assistance from these outside agencies as required. The Site Emergency Director will be responsible for notification of NRC's regional office of Inspection and Enforcement.

Agreement has been made with the State of Tennessee, Tennessee Emergency Management Agency (TEMA), to provide for planning and conduct of emergency operations for emergencies at CRBRP (Reference 1). TEMA is responsible for coordination of the efforts of all state agencies and local governments in the development of response plans that have an impact beyond the capability of a single agency or local government to control. The actual agreements and arrangements involved with such state agency and local government will be specifically defined in the State of Tennessee CRBRP Radiological Emergency Response Plan which will be provided in the CRBRP FSAR. The TVA CRBRP

Radiological Emergency Plan will utilize the liaisons already established in developing the Sequoyah and Watts Bar Radiological Emergency Plans with the State of Tennessee. TEMA will notify the State of North Carolina, Department of Crime Control and Safety, surrounding states as necessary, and coordinate assistance from the various Tennessee agencies.

TVA will maintain liaison with the Tennessee Emergency Management Agency, particularly with respect to the availability of emergency services. The Tennessee Emergency Management Agency will inform these agencies of actions to be taken under their respective statutory authority and assist them in developing emergency procedures. TVA will provide any necessary training for local fire and police departments, ambulance services, and hospitals in radiological hygiene practices and recognition of raidological hazards. The attached Table 13.3-1 lists the organizations that will be participating in the Clinch River Breeder Reactor Plant Radiological Emergency Plan.

Arrangements will be made for local ambulance service and fire departments to provide back-up emergency service as required to the plant. Agreements will also be culminated between TVA and a nearby hospital to provide emergency treatment to irradiated or contaminated patients as required. TVA will assist in training ambulance attendants and hospital personnel in this type of treatment and will ensure that adequate equipment is made available as necessary. An agreement will also be made with the Radiation Emergency Assistance Center and Training Site (REAC/TS) Facility operated by the Oak Ridge Associated Universities (ORAU) for emergency treatment of severely contaminated or irradiated personnel.

13.3.4 Emergency Action Levels

TVA will utilize the following emergency classification:

1. Notification of Unusual Event
2. Alert
3. Site Emergency
4. General Emergency

This system of classification will be consistent with the system used by State and local emergency organizations.

A Notification of Unusual Event will provide early and prompt notification of minor events which could develop into or be indicative of more serious conditions which are not yet fully realized. The purposes of Notification of Unusual Event are to (1) assure that the first steps in activating emergency organizations have been carried out, and (2) provide current information on unusual events.

An Alert class will be indicated when events are in progress or have occurred which involve an actual or potential substantial degradation of the level of safety of the plant. The purposes of the Alert class are to (1) assure that emergency personnel are readily available to respond if the situation becomes more serious or to perform confirmatory radiation monitoring if required, and (2) provide offsite authorities current status information.

A Site Emergency will be declared when events are in progress or have occurred which involve actual or likely major failures of plant functions needed for protection of the public. The purposes of the Site Emergency class are to (1) assure that response centers are staffed, (2) assure that monitoring teams are dispatched, (3) assure that personnel required for evacuation of nearsite areas are at duty stations if the situation becomes more serious, and (4) provide current information for and consultation with offsite authorities and the public.

A General Emergency will be declared when events are in progress or have occurred which involve actual or imminent substantial core failure with potential for loss of containment integrity. The purposes of the General Emergency class are to (1) initiate predetermined protective actions for the

Arrangements will be made for an ambulance service to provide emergency service as required to the plant. Agreements will also be culminated between TVA and a nearby hospital to provide emergency treatment to irradiated or contaminated patients as required. TVA will assist in training ambulance attendants and hospital personnel in this type of treatment and will ensure that adequate equipment is made available as necessary. An agreement will also be made with the Radiation Emergency Assistance Center and Training Site (REAC/TS) Facility operated by the Oak Ridge Associated Universities (ORAU) for emergency treatment of severely contaminated or irradiated personnel.

13.3.4 Emergency Action Levels

TVA will utilize the following emergency classification:

1. Notification of Unusual Event
2. Alert
3. Site Emergency
4. General Emergency

This system of classification will be consistent with the system used by State and local emergency organizations.

A Notification of Unusual Event will provide early and prompt notification of minor events which could develop into or be indicative of more serious conditions which are not yet fully realized. The purposes of Notification of Unusual Event are to (1) assure that the first steps in activating emergency organizations have been carried out, and (2) provide current information on unusual events.

An Alert class will be indicated when events are in progress or have occurred which involve an actual or potential substantial degradation of the level of safety of the plant. The purposes of the Alert class are to (1) assure that emergency personnel are readily available to respond if the situation becomes more serious or to perform confirmatory radiation monitoring if required, and (2) provide offsite authorities current status information.

A Site Emergency will be declared when events are in progress or have occurred which involve actual or likely major failures of plant functions needed for protection of the public. The purposes of the Site Emergency class are to (1) assure that response centers are staffed, (2) assure that monitoring teams are dispatched, (3) assure that personnel required for evacuation of nearsite areas are at duty stations if the situation becomes more serious, and (4) provide current information for and consultation with offsite authorities and the public.

A General Emergency will be declared when events are in progress or have occurred which involve actual or imminent substantial core failure with potential for loss of containment integrity. The purposes of the General Emergency class are to (1) initiate predetermined protective actions for the public, (2) provide continuous assessment of information from the site and

public, (2) provide continuous assessment of information from the site and offsite, and (3) initiate additional measures as indicated by releases or potential releases of radioactivity.

Recognition of the emergency class which may result from many initiating conditions will be primarily a judgement matter for plant operating personnel. The initiating conditions used for recognizing and declaring the emergency class will be based on specific measured values or observable conditions defined as Emergency Action Levels (EAL). These can be combinations of specific instrument readings (including their rates of change), annunciator warnings, time periods certain conditions exist, etc. The specific instrument readings and parameters required for determination of these EAL's will be detailed in plant operating instructions. These EAL's will be used as thresholds for determining the emergency classifications.

13.3.5 Protective Measures

13.3.5.1 Plant

In the event of an unplanned release of radioactivity or sudden increase in radiation levels, it will be the responsibility of the Site Emergency Director to make the decision concerning the necessity for building and/or area evacuation. In arriving at this decision, the primary considerations will be personnel safety. The emergency siren will be used to initiate the assembly of personnel. The public address system will be used to evacuate specific areas. Upon hearing the emergency signal, all persons in the plant will go to their preassigned areas to wait completion of radiological surveys and further instructions. If only a specific area is to be evacuated, personnel in that area will evacuate to a safe area. Employees will be released from their assembly points when the Site Emergency Director determines it is suitable. Should evacuation of unnecessary site personnel be considered, routes, specific radiological conditions, traffic density, and weather conditions will be evaluated prior to directing their evaluation. Any necessary personnel decontamination identified during area evacuation and accountability will be accomplished prior to evacuation from the site.

13.3.5.2 Offsite

Through the assessment actions of the MSECC, the actual or potential offsite environmental conditions will be known. The State and local agencies will be responsible for implementing actions to protect the health and safety of the public. TVA recommends protective actions to these agencies but the State and local governments are responsible for deciding if any actions are needed and what they should be. TVA will assist State and local governments as necessary to implement protective actions for the public. TVA will also provide a prompt notification system for State and local governments to alert the public within a 10-mile area around the plant that protective actions may be required.

13.3.6 Review and Updating

The CRBRP-REP will be reviewed annually by the Division of Nuclear Power and the Division of Occupational Health and Safety for accuracy, completeness,

operational readiness, and compliance with existing regulations. All holders of these plans will acknowledge in writing, receipt of all changes.

13.3.7 Medical Support

The CRBRP-REP will include a description of medical facilities at the plant and arrangements made with other facilities to provide additional support. One ambulance will be maintained at the site. Medical consultation will be available from TVA doctors in Chattanooga and other areas. Members of the plant emergency teams will be trained in first aid.

Arrangements will be made with a local hospital and with attending physicians for the emergency treatment of contaminated, injured, and exposed individuals. The Oak Ridge Associated Universities REAC/TS has agreed to provide treatment to severely contaminated or exposed individuals.

Arrangements will be made with a local private ambulance service to provide emergency service as required to the plant and affected areas in the event that more than one ambulance is required.

Figure 13.3-2 depicts the proposed locations of the Technical Support Center, the Operations Support Center, and the layout of the medical facilities and the personnel decontamination facilities.

13.3.8 Exercises and Drills

An exercise will be conducted at Clinch River Breeder Reactor Plant prior to the issuance of the full power operating license to test the CRBRP-REP, State, and local plans. Exercises will be conducted yearly thereafter. Drills will be conducted in the following areas:

1. Medical Emergencies
2. Radiological Monitoring
3. Radiochemistry
4. Transportation
5. Radiological Dose Assessment
6. Fire

13.3.9 Training

TVA will provide General-REP training to all plant personnel and specific training to emergency response personnel. This training provides emergency staff personnel with general knowledge of the emergency plan. Training on specific duties and emergency responsibilities will be provided personnel as necessary. This training will be such that each of these individuals will have a working knowledge of the emergency plan and his responsibilities and actions upon declaration of an emergency.

Training and periodic retaining will be provided to those offsite agencies who may be involved during an emergency, and will include procedures for notification, basic radiation protection, their expected roles, and site access procedures, as applicable. The Division of Occupational Health and Safety will provide for training to fire, police, ambulance, and hospital personnel from agencies with which TVA has agreement letters.

13.3.10 Recovery and Reentry

The CRBRP-REP will provide for the development and implementation of detailed recovery and reentry plans based on evaluation of conditions existing at the time. Recovery and reentry will be a deliberate, thoroughly planned evaluation and all procedures developed will be reviewed by the Plant Operations Review Committee prior to implementation.

13.3.11 Implementation

Operating instructions promulgated in the plant operating manual will be used to control plant operations during normal operating conditions. Abnormal operating instructions and emergency operating instructions which are contained in the Plant Operating Manual will be used to specify the manipulation of controls of the plant during conditions requiring protective measures to be taken to place the plant in a safe condition. The abnormal and emergency instructions will contain assignments of responsibility for the performance of specific tasks not otherwise established by plant practices and instructions.

Plant instrumentation indications requiring implementation of emergency and abnormal operating instructions will be specified in these instructions. Emergency action levels, also based on plant instrumentation indication, requiring implementation of the CRBRP-REP for protection of personnel and the environment are specified in the emergency plan.

Specific actions required of offsite TVA support groups will be delineated in the CRBRP-REP.

Instructions for medical treatment and handling of contaminated and exposed individuals will be contained in the CRBRP-REP.

Equipment requirements, including communications equipment, for implementation of the emergency plan will be contained in CRBRP-REP. Storage and calibration requirements will be specified. Alarm signals will be described in the plant procedures.

Instructions for restoring the emergency situation to normal, from the standpoint of the hazard to personnel, plant safety, and the environment, will be contained in the CRBRP-REP and the emergency and abnormal operating instructions. Instructions for repair of plant equipment or structures will be prepared after evaluation of the damage or malfunction involved.

Reference to Section 13.3

1. Letter, Tanner, E.P., Director, Tennessee Emergency Management Agency, to Green, H. J., TVA, July 6, 1982. (Supplied to NRC in letter HQ:S:83:242, John R. Longenecker to J. Nelson Grace, April 8, 1983.)

TABLE 13.3-1

PARTICIPANTS IN CRBRP RAIDOLOGICAL EMERGENCY PLAN

Tennessee Emergency Management Agency

Tennessee Department of Public Health

Tennessee Department of Agriculture

Tennessee Department of Public Welfare

Tennessee Department of Safety

Tennessee Department of Conservation

Tennessee National Guard

Tennessee Game and Fish Commission

Tennessee Department of Transportation

City and County Officials of Roane, Anderson, Loudon, Morgan, and Knox Counties

Sheriff's Department of Roane, Anderson, Loudon, Morgan, and Knox Counties

Civil Defense Coordinators of Roane, Anderson, Loudon, Morgan, and Knox Counties

Local Police Departments

Local Ambulance Service

Local Fire Department

Radiological Emergency Assistance Center Training site (REAC/TS)

Oak Ridge Hospital of the United Methodist Church (ORHUMC)

Department of Energy (DOE)

National Aeronautics and Space Administration

Nuclear Regulatory Commission

Environmental Protection Agency

Federal Emergency Management Agency

FIGURE 13.3-1

Relationship of Emergency Centers and Agencies

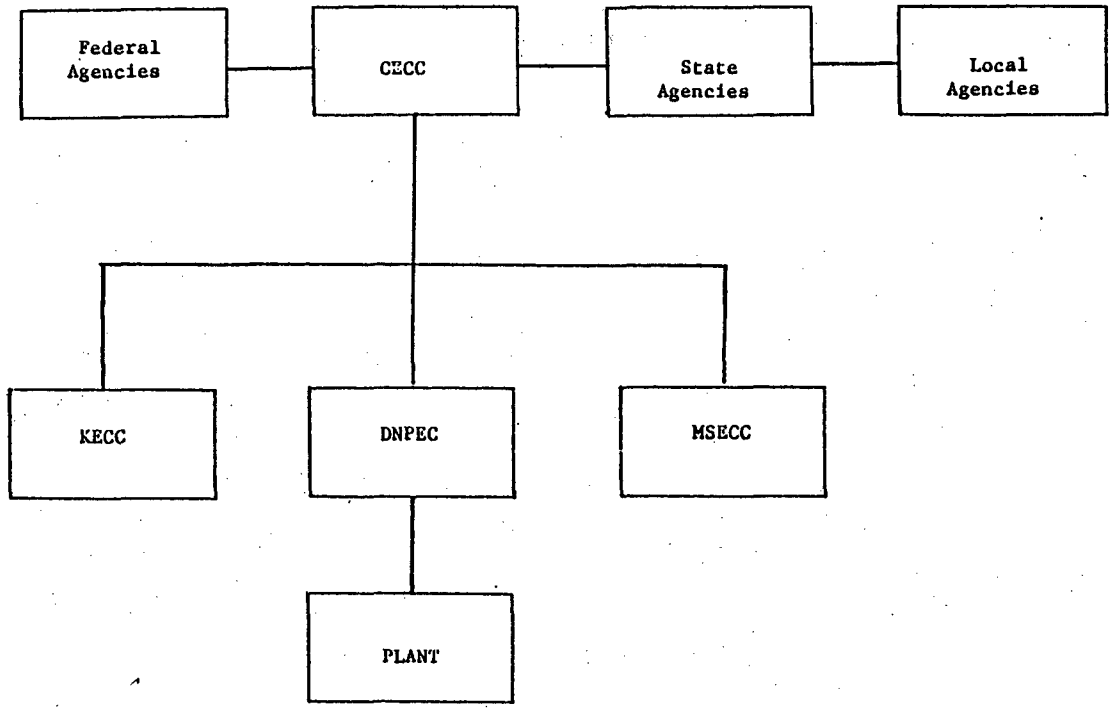

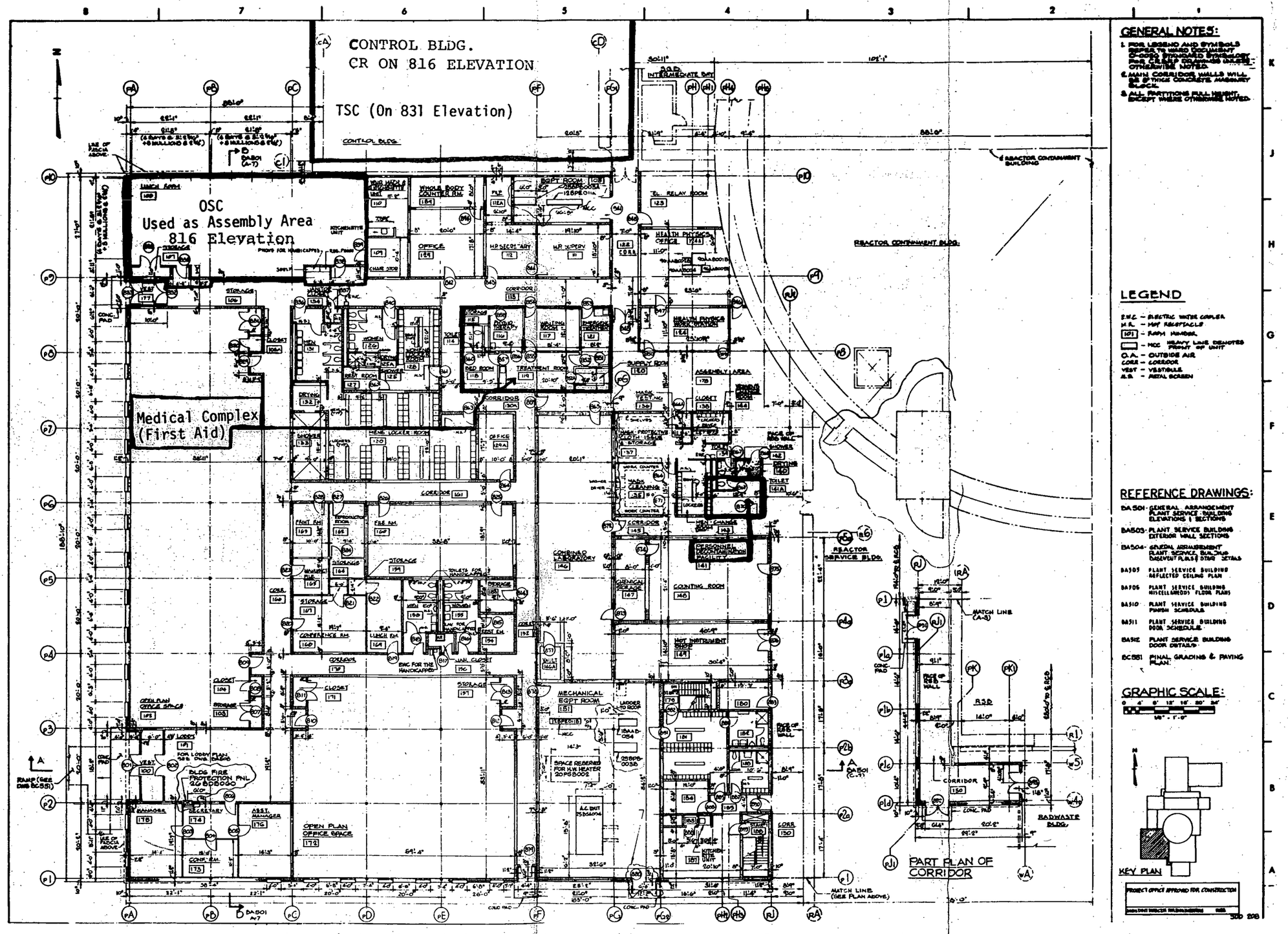

BA500-7

Locations of Technical Support Center, Operational Support Center, Medical Facilities and Personnel Decontamination Facilities

Figure 13.3-2

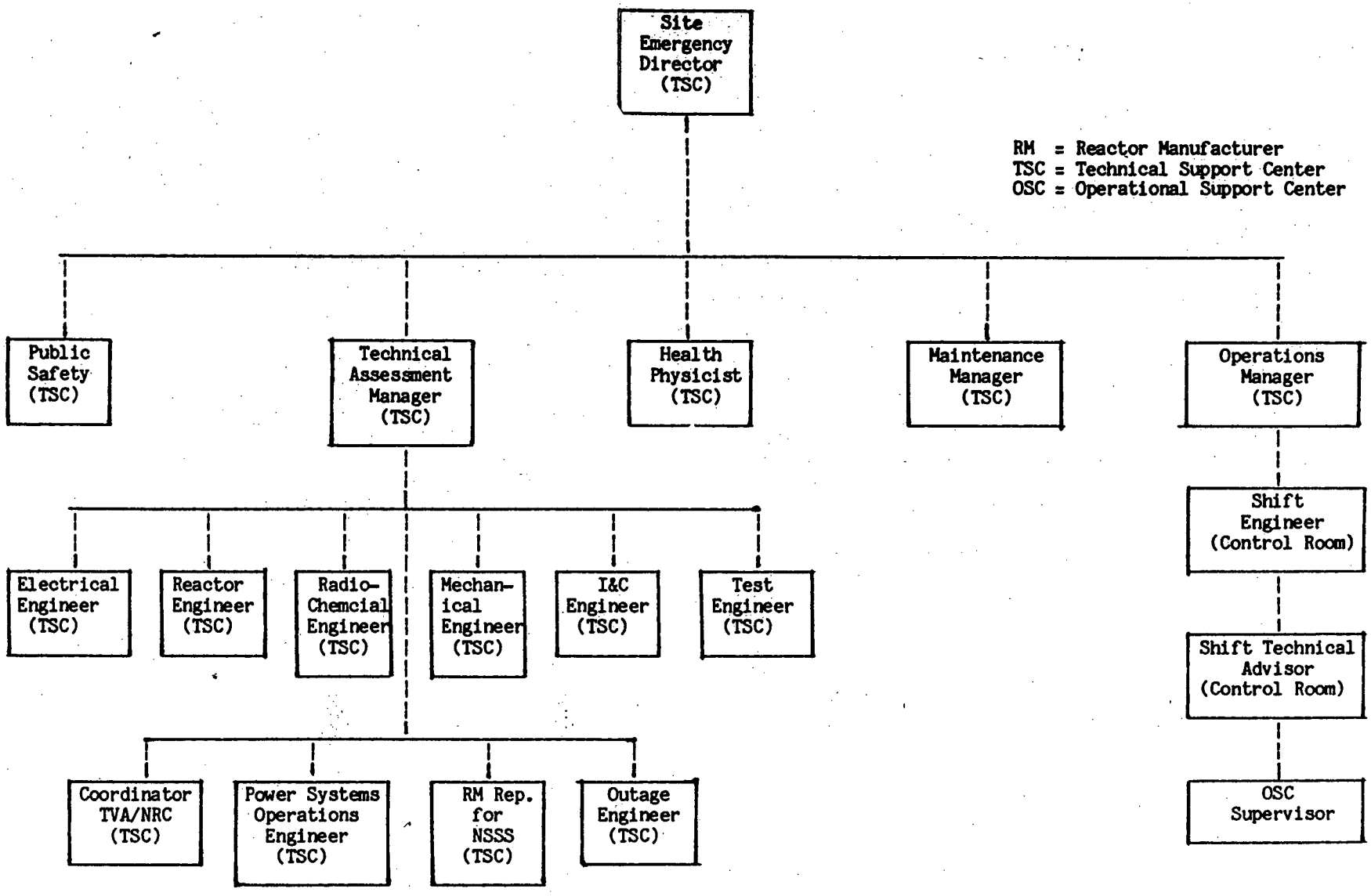

FIGURE 13.3-3 CRBRP EMERGENCY PLANT ORGANIZATION

APPENDIX 13.3A

A. Introduction

A radiological analysis of the facility design features, site layout, and site location with respect to considerations of surroundings in compliance to 10 CFR 50, Appendix E-1982 has been conducted. The findings of this analysis are listed in this section.

B. Description of Analysis for Clinch River Project Emergency Planning Curves

Plots showing projected ground level doses, for both whole body and thyroid, resulting from the most serious design basis accident analysis is depicted in Figures 13.3A-1 through 13.3A-4. These provide, respectively, the elapsed exposure times to reach specific bone, lung, thyroid, and whole body doses as a function of downwind distance based on exposures resulting from the Site Suitability Source Term (SSST). The use of SSST is conservative since it envelopes the most serious design basis accident analyzed in the PSAR.

Source Term

100% Noble Gases

25% Halogens (50% release to containments, 1/2 of which [25% total] is airborne and available for release)

1% Solid Fission Products

1% Plutonium

Released instantly to and uniformly distributed in Reactor Containment Building (RCB).

Meteorology

Atmospheric dispersion parameters (x/Q's) are the ninety-fifth percentile values (see Section 2.3). Consistent with Regulatory Standard Review Plan, Section 2.3.4, the 0-2 hour exposure intervals were evaluated based on the single-hour 95% x/Q value.

Plume front transit times to downwind positions are based on a wind speed of 1 mile/hour.

Containment Modeling

The following parameters are used to evaluate Source Term releases from containment:

RCB Leakage to Annulus (Direct to Annulus Filter Intake)	0.1% Volume/Day

Annulus Flow Rates	
Filtered Exhaust	3000 CFM
Filtered Recirculation	3500 CFM per 1000 CFM Exhausted
Time Delay from Source Term Release to Initiation of Annulus Filtration	No Delay
Time Delay from Source Term Release to Initiation of Annulus Recirculation	<10 Seconds
Total Bypass Leakage (1% of RCB Leakage)	0.001% Volume/Day
Bypass Leakage Direct to Environment (60% of Total Bypass)	0.0006% Volume/Day
Bypass Leakage to the Reactor Service Building (RSB) (40% of Total Bypass)	0.0004% Volume/Day
Sources of Bypass Leakage to the RSB	96.4% Personnel and Equipment Airlock 3.6% All other Sources
Gamma Shielding	1.5" Steel (RCB) Plus 4' Concrete
Filter Efficiencies	
Iodine	95%
Particulate	99%
Noble Gas	-0-

Radiological Parameters

Inhalation dose factors are per Regulatory Guide 1.109-R1-1977 for a standard adult.

Time dependent breathing rates are per Regulatory Guide 1.4-R2-1974.

External gamma whole body exposure is based on a semi-infinite cloud per Regulatory Guide 1.4-R2-1974 for the released material and includes direct exposure from the material within the Reactor Containment Building.

Radioactive decay of nuclides during downwind transit of the plume is conservatively neglected. While conservative, this assumption has minimal impact on the results, since off-site exposures are controlled by relatively long-lived nuclides.

C. Estimated Reaction and Response Times

1. The time required for the initial accident assessment of the most serious design basis accident may require 15 minutes. This time is an estimate based on the operation of the reactor instrumentation used to follow the course of accidents. Based on TVA's experience, the time required to perform an initial dose projection and notify offsite authorities can be accomplished in 15 minutes.

For the most serious design basis accident, the projected two-hour doses at the exclusion area boundary do not reach the protective action guide level for evacuation.

2. The time required to warn all resident and transient persons in any evacuation sector will conform to the requirements of 10 CFR 50, Appendix E-1982.

3. The estimated elapsed time, after the initial warning, to evacuate the 2-mile emergency planning zone (EPZ) is 4 hours. The estimated evacuation time for the 5-mile EPZ is 5 hours, 20 minutes. The estimated evacuation time of the 10-mile EPZ is 7 hours 15 minutes. Each estimate contains a 1-hour 50-minute preparation time factor.

4. These evacuation time estimates were prepared by the Traffic Management Division of the Tennessee Department of Transportation.

   a. Figures 13.3A-5 and 13.3A-6 are maps showing all roads within 10 miles of the Clinch River Project. Also indicated are the 2-, 5-, and 10-mile EPZ.

   b. Table 13.3A-1 shows the transient and resident populations in the 16 directional sectors within 10 miles of the Clinch River Project. This table uses 1980 census data.

   c. Table 13.3A-2 shows the estimated transient and resident populations in the 16 directional sectors within 10 miles of the Clinch River Project. This table uses the projected population figures for year 2020. The projected population figures come from a report prepared by the Firm of Dames and Moore dated June 16, 1981.

   d. Private automobiles will be the primary means for evacuating the population. Buses may be used to evacuate the Edgewood School. The problem will be specifically addressed in the CRBRP-REP.

5. Table 13.3-1 gives the agencies involved in the CRBRP emergency plan.

TABLE 13.3A-1
MAXIMUM RESIDENT AND TRANSIENT
POPULATION DISTRIBUTION WITHIN
10 MILES OF THE DEMONSTRATION PLANT
FOR CENSUS YEAR 1980

Sector Designation	Radial Interval (miles) 0-1	1-2	2-3	3-4	4-5	5-10
N	0	0	14	184	0	2,000
NNE	0	0	0	0	22	4,400
NE	0	0	0	8	80	7,191
ENE	10	10	0	8	0	4,728
E	20	30	50	398	3,568	5,172
ESE	20	30	50	187	159	2,300
SE	0	59	50	460	110	7,200
SSE	0	300	79	90	320	2,000
S	0	89	50	120	160	1,120
SSW	10	69	50	80	90	936
SW	20	80	119	110	140	1,292
WSW	20	70	80	193	340	5,000
W	0	130	114	110	991	6,764
WNW	10	94	170	10	60	4,676
NW	30	44	0	10	40	3,972
NNW	10	514	316	850	120	1,100
Sum for Radial Interval	150	1,519	1,142	2,818	6,200	59,851
Accumulative Total up to Radius Indicated	150	1,669	2,811	5,629	11,827	71,680

TABLE 13.3A-2
MAXIMUM RESIDENT AND TRANSIENT
POPULATION DISTRIBUTION WITHIN
10 MILES OF THE DEMONSTRATION PLANT
FOR CENSUS YEAR 2020

Sector Designation	Radial Interval (miles) 0-1	1-2	2-3	3-4	4-5	5-10
N	0	0	14	184	0	2,000
NNE	0	0	0	0	22	8,300
NE	0	0	0	8	132	8,591
ENE	20	20	0	8	0	6,352
E	50	80	140	678	5,236	4,896
ESE	20	30	70	217	189	1,500
SE	0	69	70	758	70	11,500
SSE	0	492	89	110	210	1,300
S	0	109	60	150	200	936
SSW	10	79	70	100	110	1,108
SW	30	100	139	130	170	1,700
WSW	20	80	100	223	410	8,852
W	0	150	134	130	1,399	10,524
WNW	10	114	210	10	50	3,860
NW	30	44	0	10	40	5,032
NNW	10	774	424	850	100	900
Sum for Radial Interval	200	2,141	1,520	3,566	8,338	77,451
Accumulative Total up to Radius Indicated	200	2,341	3,861	7,427	15,765	93,216

FIGURE 13.3A-1

ELAPSED EXPOSURE TIME TO REACH SPECIFIC BONE DOSE VERSUS DOWNWIND DISTANCE (BASED ON SITE SUITABILITY SOURCE TERM)

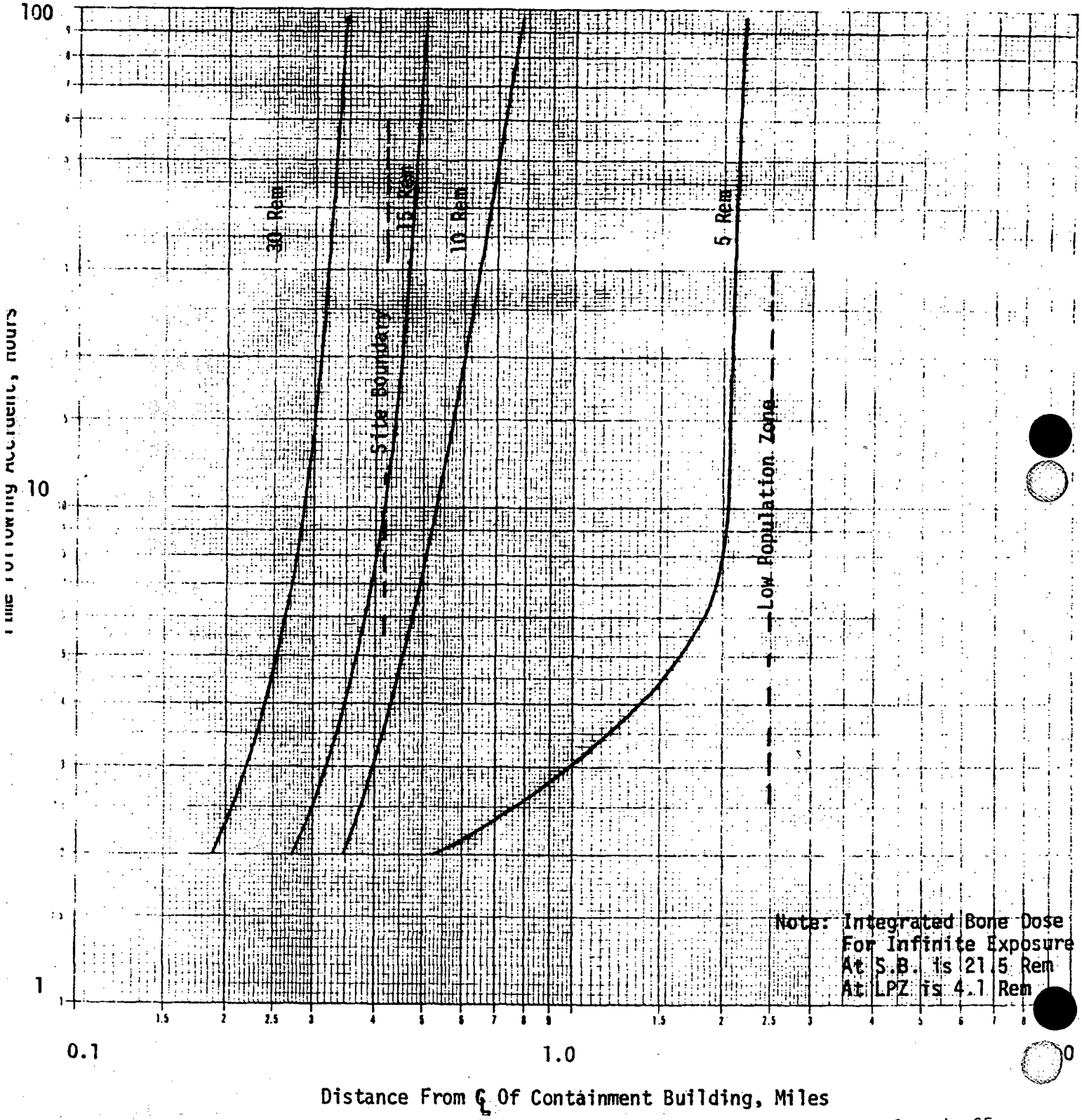

FIGURE 13.3A-2

ELAPSED EXPOSURE TIME TO REACH SPECIFIC LUNG DOSE VERSUS DOWNWIND DISTANCE (BASED ON SITE SUITABILITY SOURCE TERM)

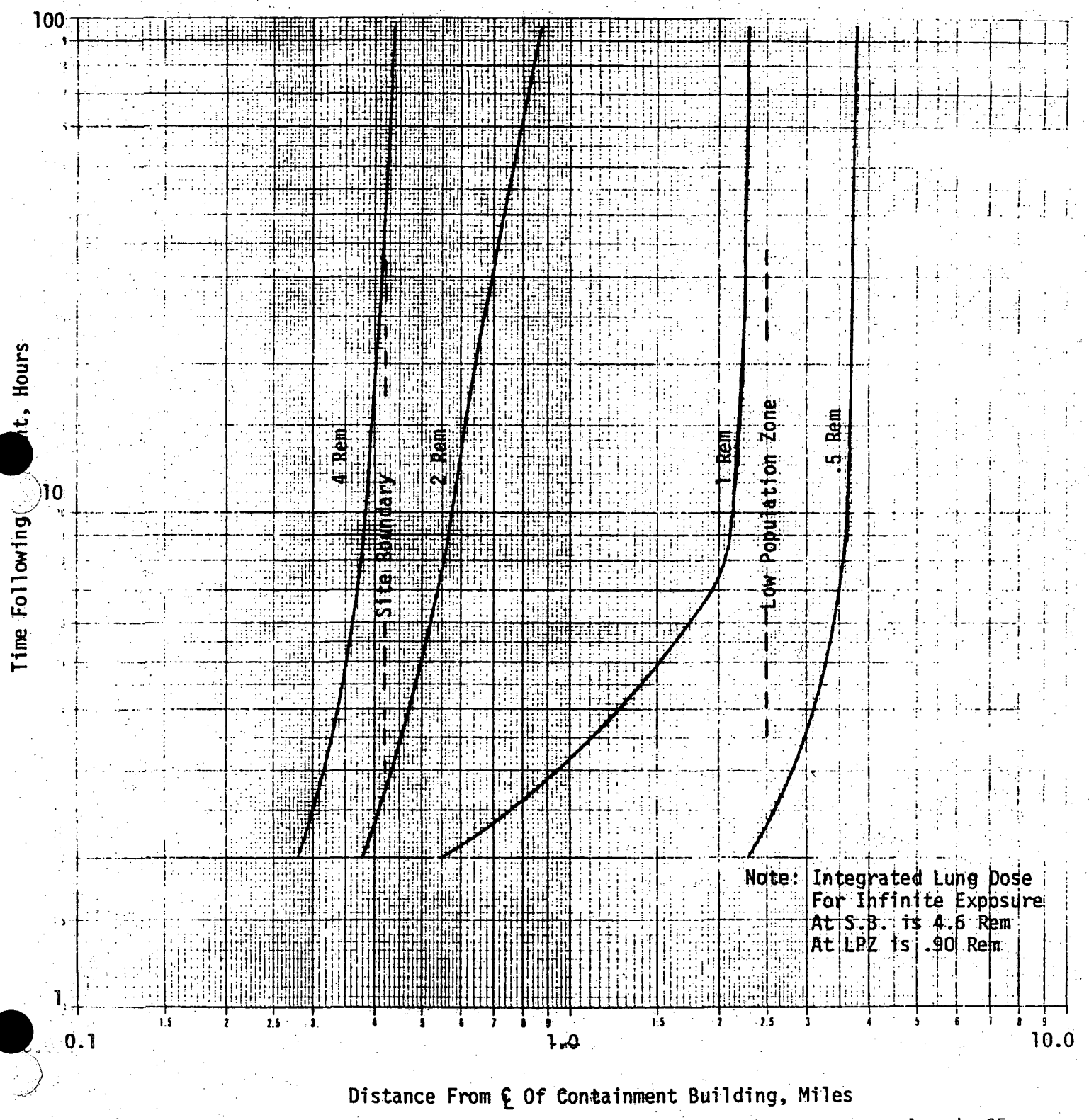

Amend. 65
Feb. 1982

FIGURE 13.3A-3

ELAPSED EXPOSURE TIME TO REACH SPECIFIC THYROID DOSE VERSUS DOWNWIND DISTANCE (BASED ON SITE SUITABILITY SOURCE TERM)

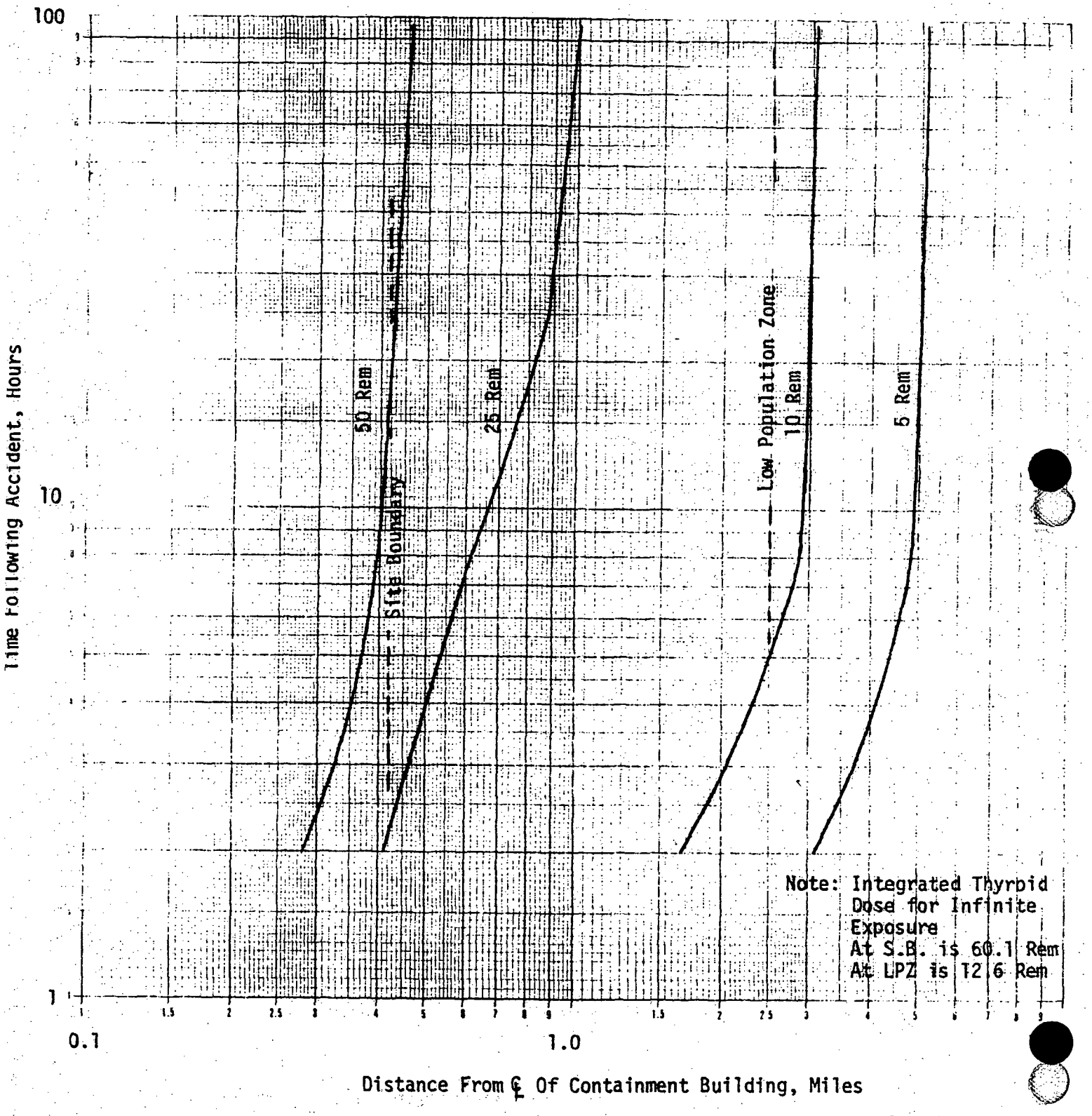

Amend. 65
Feb. 1982

FIGURE 13.3A-4

ELAPSED EXPOSURE TIME TO REACH SPECIFIC WHOLE BODY DOSE VERSUS DOWNWIND DISTANCE (BASED ON SITE SUITABILITY SOURCE TERM)

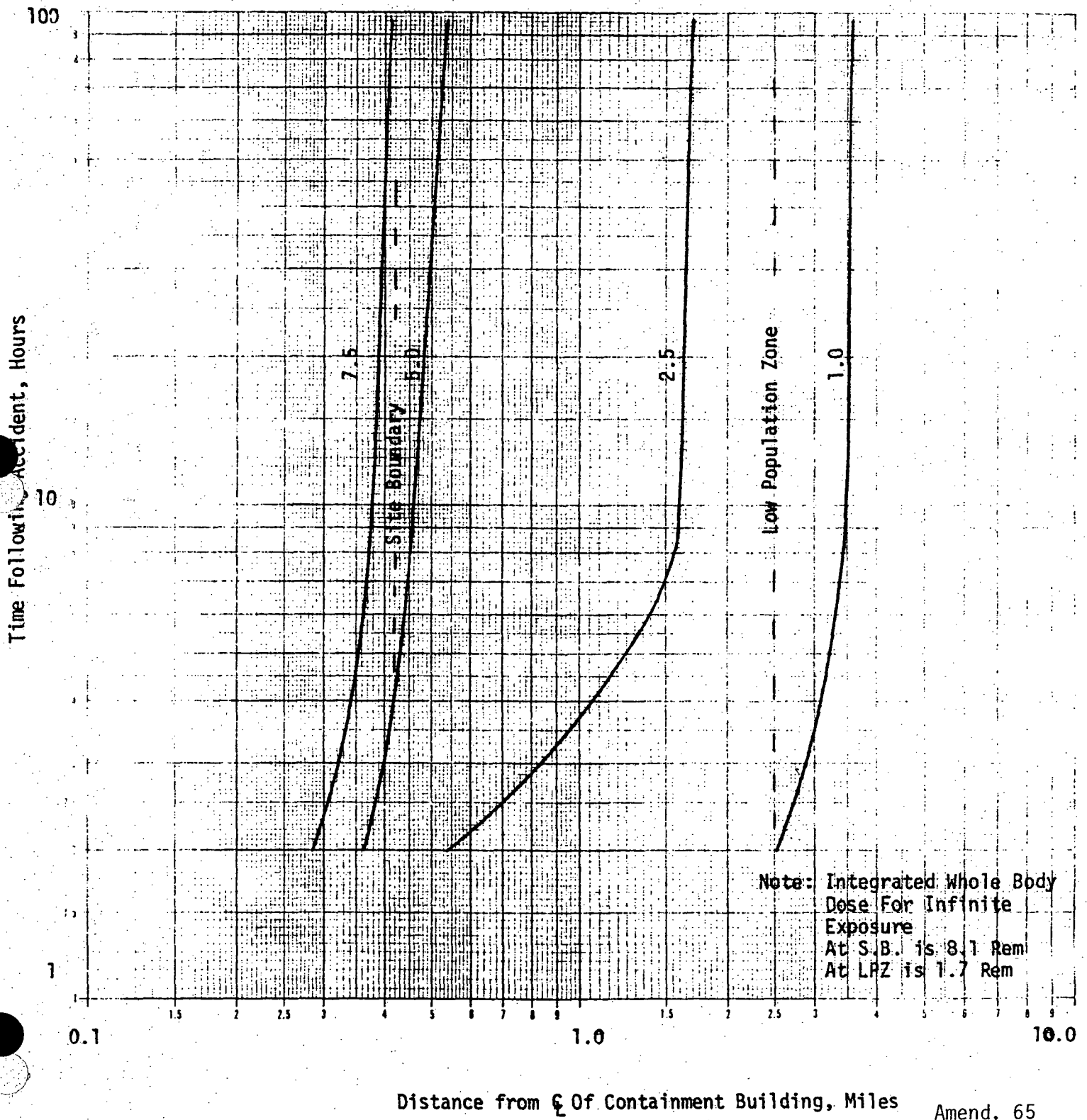

Amend. 65
Feb. 1982

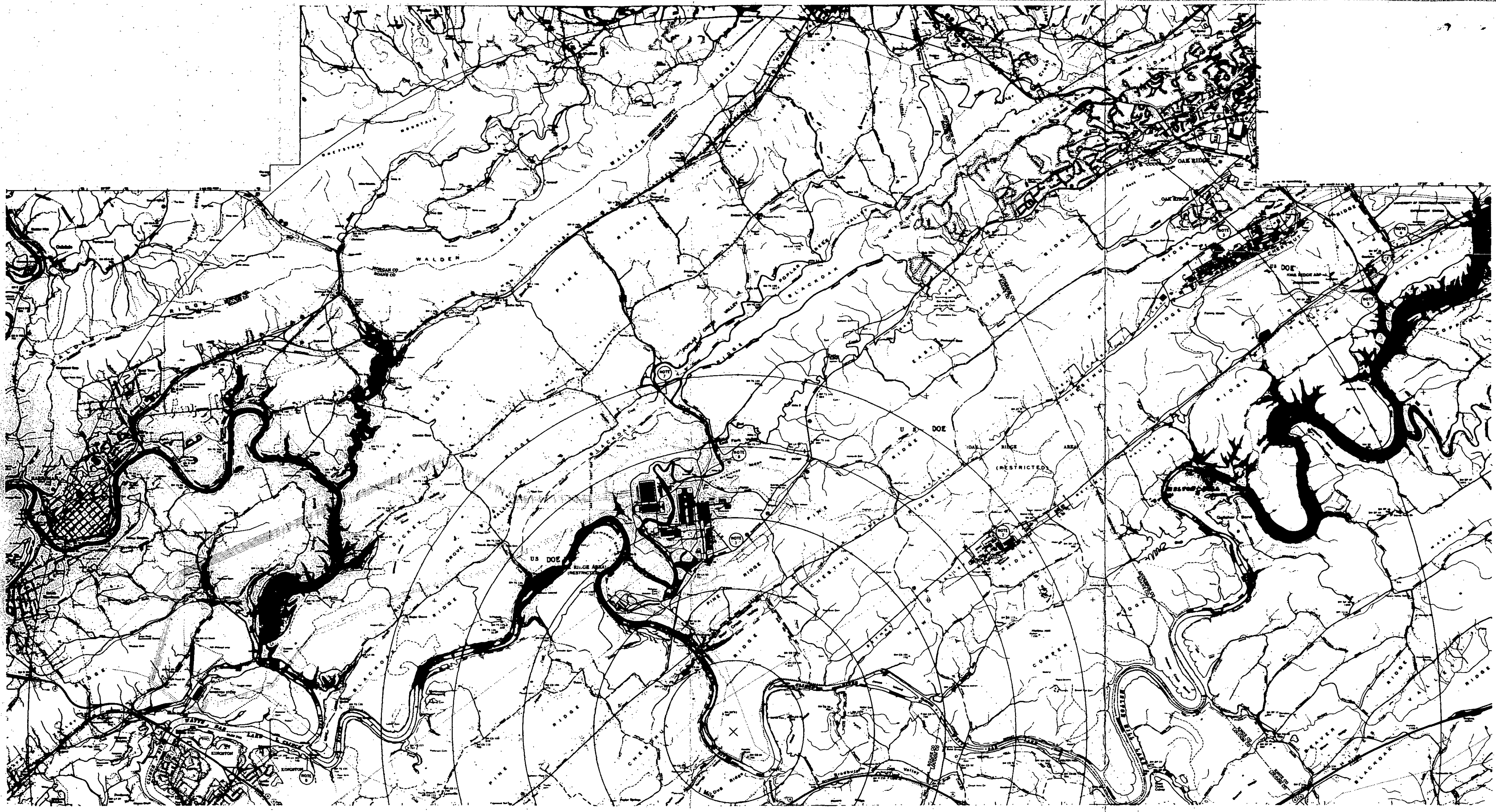

LEGEND

Primary highway, hard surface heavy duty (24 ft.)
Secondary highway, hard surface, medium duty (24 ft.)
Light-duty road, hard or improved surface (16-18 ft.)
Unimproved road
Road under construction, alinement known
Proposed road
Dual highway, dividing strip 25 feet or less
Dual highway, dividing strip exceeding 25 feet
Trail
Interstate Route, U. S. Route, State Route
Railroad: single track and multiple track
Bridge: road and railroad
Drawbridge: road and railroad
Footbridge

Buildings (dwelling, place of employment, etc.)
School, church, and cemetery — Cem
Buildings (barn, warehouse, etc.)
Power transmission line with located metal tower
Telephone line, pipeline, etc. (labeled as to type)
Wells other than water (labeled as to type) — Oil, Gas
Tanks: oil, water, etc. (labeled only if water) — Water
Horizontal and vertical control station:
Tablet, spirit level elevation — BM △ 5653
Other recoverable mark, spirit level elevation — △ 5455
Horizontal control station: tablet, vertical angle elevation — VABM △ 9519
Any recoverable mark, vertical angle or checked elevation — △ 3775
Vertical control station: tablet, spirit level elevation — BM × 957
Other recoverable mark, spirit level elevation — × 954

CRBRP MAP INFORMATION

NOTES

1. Four-lane Road from ORGDP to intersection with White Wing Road
2. 3 lane road, 1 lane reversible with directional signal lights.
3. 5 lane road, 3 lanes reversible with directional signal lights.
4. 3 lane road, 1 lane reversible with directional signal lights.
5. Guard at gate during day - gate locked at night. Bull Bluff Road is access to recreational area.
6. This Bridge closed for an indefinite period
7. one way bridge
8. Ferry.

T-T Indicates - - Includes portion of roads of more than 2 lanes. ref. notes 1, 2, 3, and 4 above.

SCALE OF MILES

1 0 1 2

FIGURE 13.3A-5 Project Area - North Half

Amend. 69
July 1982

LEGEND

- Primary highway, hard surface heavy duty (24 ft.)
- Secondary highway, hard surface, medium duty (24 ft.)
- Light-duty road, hard or improved surface (16-18 ft.)
- Unimproved road
- Road under construction, alinement known
- Proposed road
- Dual highway, dividing strip 25 feet or less
- Dual highway, dividing strip exceeding 25 feet
- Trail
- Interstate Route · U. S. Route · State Route
- Railroad: single track and multiple track
- Bridge: road and railroad
- Drawbridge: road and railroad
- Footbridge
- Tunnel: road and railroad
- Buildings (dwelling, place of employment, etc.)
- School, church, and cemetery — Cem
- Buildings (barn, warehouse, etc.)
- Power transmission line with located metal tower
- Telephone line, pipeline, etc. (labeled as to type)
- Wells other than water (labeled as to type) — Oil, Gas
- Tanks: oil, water, etc. (labeled only if water) — Water
- Horizontal and vertical control station:
  - Tablet, spirit level elevation — BM △ 5653
  - Other recoverable mark, spirit level elevation — △ 5455
- Horizontal control station: tablet, vertical angle elevation — VABM △ 889
  - Any recoverable mark, vertical angle or checked elevation — △ 3775
- Vertical control station: tablet, spirit level elevation — BM × 957
  - Other recoverable mark, spirit level elevation — × 954
- Spot elevation — 7369

CRBRP MAP INFORMATION

NOTES

1. Four-lane Road from ORGDP to intersection with White Wing Road
2. 3 lane road, 1 lane reversible with directional signal lights.
3. 5 lane road, 3 lanes reversible with directional signal lights.
4. 3 lane road, 1 lane reversible with directional signal lights.
5. Guard at gate during day – gate locked at night.
   Bull Bluff Road is access to recreational area.
6. This Bridge closed for an indefinite period
7. one way bridge
8. Ferry.

1-7 Indicates - Includes portion of roads of more than 2 lanes, ref. notes 1, 2, 3, and 4 above.

SCALE OF MILES

1 0 1 2

FIGURE 13.3A-6 Project Area - South Half

13.4 REVIEW AND AUDIT

13.4.1 Review and Audit - Construction

The review and audit function during plant design and construction will be accomplished as an integral part of the quality assurance program described in Chapter 17.

13.4.2 Review and Audit - Test and Operation

This will be included in the FSAR.

13.5 PLANT PROCEDURES

13.5.1 Administrative Procedures

The plant administrative procedures will be provided at the FSAR stage. At that time both general and initial test program administrative procedures will be addressed.

13.5.2 Operating and Maintenance Procedures

Plant operating and maintenance procedures/instructions will be prepared for integrated plant operations, system operation, and plant maintenance activities following the generic categories listed in Table 3.5-1. They will be prepared by the plant operating personnel in accordance with NRC Regulatory Guide 1.33-R-2-1978. These procedures/instructions will be followed by the licensed operators in the operating the plant.

The preliminary schedule for the preparation of the operating and maintenance procedures/instructions is given in Table 13.5-1.

Table 13.5-1

Preliminary Schedule for O&M Procedures/Instructions

Title	Schedule for Preparation
General Operating Instructions	To be completed and approved at least six months prior to fuel loading and additional instructions developed as plant operation proceeds.
Normal Operating Instructions	To be completed and approved at least six months prior to fuel loading and additional instructions developed as plant operation proceeds.
Emergency Operating Instructions	To be completed and approved at least six months prior to fuel loading and additional instructions developed as plant operation proceeds.
Abnormal Operating Instructions	To be completed and approved at least six months prior to fuel loading and additional instructions developed as plant operation proceeds.
Maintenance Operating Instructions	To be completed and approved at least six months prior to fuel loading and additional instructions developed as plant operation proceeds.
Other Manuals/Procedures/Plans Fire Brigade Handbook Health Physics Manual Administrative Release Manual Division Procedure Manual Operational Quality Assurance Manual TVA Hazards Control Manual Nuclear Materials Management Guide Radiological Emergency Plan	To be complete and available at least six months prior to fuel loading.

FIGURE 13.5-1

DELETED

13.6 PLANT RECORDS

13.6.1 Plant History

The CRBRP operating record program, under TVA's responsibility as the plant operator, will observe all acts of Congress, Executive orders, and regulations of Federal agencies having jurisdiction in records administration and comply with 10 CFR 50, Appendix B, Section XVII-1982. TVA complies with Federal Power Commission regulations concerning the preservation and disposal of records of public utilities and licensees, insofar as these regulations apply to TVA records relating to the generation, transmission, and sale of electric energy.

The Plant Administrative Officer will have responsibility for the general supervision and coordination of the plant master file.

13.6.2 Operating Records

This will be included in the FSAR.

13.6.3 Event Records

This will be included in the FSAR.

13.7 RADIOLOGICAL SECURITY

The requirements of applicable provisions of: 10 CFR Part 11-1982; Part 25-1982; Part 50 [these applicable Paragraphs, 34(c), 34(d), 34(e)-1981-82]; Part 70 [Paragraph 20a-1980]; Part 73 [these applicable Sections, 20, 21, 25, 26, 45, 46, 55, 71, 72, 80,-1980-82 Appendices B-1981 and C-1978]; and Part 95-1980-82 will be followed at CRBRP. This section discusses in general how the CRBRP will meet the requirements and each of the Parts and/or Paragraphs listed above will be discussed at the appropriate paragraph. The CRBRP Physical Security Plan, Safeguards Contingency Plan, and Security Personnel Training and Qualification Plan will be submitted as separate safeguards information documents. Specific details will be provided by these plans.

13.7.1 Organization and Personnel

The Office of Power of the Tennessee Valley Authority (TVA) will have the security responsibilities for the CRBRP for the period from receipt of fuel to the end of operation. The organization chart shown in Figure 13.7-1 delineates this responsibility which is explained in Sections 13.7.1.1 and 13.7.1.2.

13.7.1.1 Office of Power

The Office of Power is responsible for protection of power properties. It develops detailed plans and applies specific security measures.

The Division of Nuclear Power is responsible for security of operating nuclear plants. The Nucler Power Security Section prepares required physical security plans and Safeguards Contingency Plans for approval by the Manager of Power. The Director, Division of Nuclear Power, approves the Guard Training and Qualification Plan.

13.7.1.2 Office of Management Services

The security force at the CRBRP will be provided by the Public Safety Service (PSS) Branch in the Office of Management Services of the Tennessee Valley Authority. The Public Safety security unit at CRBRP will be under the administrative supervision of the supervisor of the Nuclear Operations Section, located in the Public Safety Service Branch office, but he will be under the functional supervision of the plant manager.

13.7.1.3 Employee Selection

As discussed in Section 13.1, TVA will operate the plant, and accordingly, will provide all operating and security personnel who will be regular TVA employees.

TVA appoints, promotes, transfers, and retains employees on the basis of merit and efficiency, as prescribed in the TVA Act and in accordance with other applicable Federal laws and regulations. It is the policy of TVA to promote present employees, whenever possible, who have demonstrated

competence, reliability, and stability to vacant positions in preference to hiring persons from outside the organization. This is often accomplished by upgrading employees through internal training programs.

Specific instructions pertaining to personnel matters are contained in Section III of the TVA Administrative Release Manual. These instructions are observed by all plant supervisors, especially as they apply to appointment, transfer, promotion, and retention of employees.

Selection for a position is supportable by records of education, training, and experience, and by records of judgements which have been made regarding work performance, ability, and condition of health.

In selecting for placement or retention in positions, covered by agreements negotiated between TVA and the employee organizations, the provisions of such agreements are observed.

Because of TVA's conformance to the Veteran's Preference Act, when employing outside candidates for vacant positions, a large number of persons beginning employment have successfully completed tours of duty with the military forces of the USA. The availability for review of the military record of these candidates provides good control in the selection of high-quality candidates.

Each new TVA employee is given a physical examination and a national agency check, and written inquiries are routinely made to references such as former employers, schools, and police. Before any employee is allowed unescorted access to a nuclear plant protected area, there must be satisfactory results from his security check and emotional stability check.

Public Safety (PS) officer selection procedures include a preemployment interview by the PSS area chief and one or more PSS unit supervisors in addition to the steps previously mentioned. Upon acceptance, the candidate's first six months of employment are probationary. Appointment as a PS officer is dependent upon satisfactory service during this period and satisfactory completion of training and qualification as provided for in the CRBRP Training and Qualification Plan to be submitted with the CRBRP Physical Security Plan.

In the course of hiring personnel, the spirit and intent of 10 CFR Parts 11-1982 and 25-1982 will be adhered to in considering eligibility for Special Nuclear Material access and access to National Security information.

13.7.1.4 Employee Evaluation

Because of the general policy of promoting present employees rather than appointing candidates from outside TVA, most employees at the CRBRP will be known from their previous employment record with TVA. Although TVA employees are not given routine psychiatric examinations, they will be given when an employee's on-the-job performance indicates that this is desirable.

Observation of employee service is made as a regular part of day-to-day continuous supervisory function. When performing this function, supervisors will be alert for any unusual behavioral patterns such as may result from mental stress, alcohol, or other drug abuse.

In addition to this kind of review, the performance of employees in management and salary policy positions are reviewed formally and the results reported in order (1) to further aid in maintaining a high level of employee performance and the maximum utilization of employee abilities; (2) to provide recorded evidence of employee performance for use in making judgements concerning transfer, demotion, promotion, and terminations; (3) to assure that employees are adequately and systematically informed of the effectiveness of their service; and (4) to further facilitate the maintenance of a high standard of supervision in TVA. All employees' services are reviewed formally at the time of status changes and at such other times as may be required to achieve the above purposes. A service review shall precede each recommendation for operator licensing or renewal of an operator license.

13.7.1.5 Industrial Security Training

All employees at CRBRP will receive training in security procedures with emphasis on being alert to the presence of unauthorized persons and evidence of forced entry. This training will normally be conducted by a member of the Plant Security Force under the direction of the Plant Manager. The security force training and qualification will be in accordance with CFR 10 Part 73, Appendix B-1981.

13.7.2 Plant Design

The physical plant design has been developed so as to accommodate the necessary security provisions. TVA, along with DOE and PMC and its architect-engineer, Burns and Roe, will provide a continuing review of the plant design, as well as the detailed security provisions. Burns and Roe, as the architect-engineer for the Project, has been delegated the responsibility for detailing the security provisions. The design criteria used at the CRBRP will assure that the physical security facilities and the plant layout will be developed so as to thwart any attempted sabotage. All plans, drawings, design information, etc., related to the security system will be treated in accordance with 10 CFR Section 73.21-1981 or 10 CFR Part 95-1980-82 as appropriate. The physical security design will:

(1) Control entry to the plant site and portions of the plant;

(2) Deter or discourage penetration by unauthorized persons;

(3) Detect such penetrations in the event they occur; and

(4) Apprehend in a timely manner unauthorized persons or authorized persons acting in a manner constituting a threat of sabotage.

In the design and operation of the plant, care will be taken to minimize the potential for radiological sabotage by the use of access control measures to prevent unauthorized persons from entering the protected area. Should such persons succeed in entering the protected area, special access control measures will prevent them from entering vital equipment areas and the Special Nuclear Material (SNM) material access area.

All of the design features will be in accordance with the requirements and the performance objectives of 10 CFR Sections 73.20-1981 and 73.55-1980. In those cases where SNM is present, the additional requirements of 10 CFR Sections 73.45-1982 and 73.46-1980 will be met. The design features will meet the performance objective with a high degree of assurance based on detailed analysis.

13.7.2.1 Design Features

The design features of this plant will meet the performance objectives and requirements of 10 CFR 73.20-1981 in that it will provide with a high degree of assurance that activities involving special nuclear material will not be inimical to the common defense and security, and will not constitute an unreasonable risk to the public health and safety. The physical protection system will be designed to protect against the design basis threats of theft or diversion of strategic special nuclear material and radiological sabotage as stated in paragraph 10 CFR 73.1(a)-1982. Design features will be:

a. A security barrier with intrusion detection system around the perimeter of the plant. Gates will be kept closed and locked except during times of authorized use.

b. Employee and visitor parking located outside the security barrier.

c. An isolation zone extending from inside the security barrier to outside the barrier in which all activities will be controlled. This zone will be void of obtrusive structures and plant growth. In addition, a cleared zone will be maintained outside the isolation zone to facilitate observation of persons approaching the isolation zone.

d. A patrol road extending completely around the plant inside the security barrier.

e. Outdoor closed circuit television (CCTV) systems to permit observation of the plant perimeter, isolation zone, cleared zone, and protected area.

f. An outdoor lighting system to provide illumination to the protected area and isolation zone at a level compatible for both visual and CCTV observation.

g. A minimum number of exterior plant doors leading to vital areas, all of which will be hardened against penetration and kept locked.

h. A cardkey electronic access control system to control personnel access to vital areas in conformance with each employee's level of authorization.

i. An intrusion detection system to indicate status of hatches, emergency exits and seldom used equipment or personnel access doors providing access to vital areas.

j. An access control facility to control personnel access to the protected area and containing equipment to search personnel for weapons and explosives.

k. A communication system which will allow continuous communications between PSS officers and the central alarm station. Also, redundant communications links will be maintained between the plant and the local law enforcement agency.

l. An electric power system to provide emergency power to the security and lighting loads.

m. A force of trained, uniformed, and armed PS officers used on a three-shift basis to police the property, provide access control, respond to alarms, evaluate the situations, and neutralize the threats. Guards will be trained to meet the requirements of 10 CFR Part 73 Appendix B-1981.

n. Firefighting and other emergency equipment located throughout the plant area to minimize the consequences of fires or explosions.

o. Engineered safeguards and protective systems that will be provided to minimize the consequences of fires or explosions or to minimize the effects of postulated major equipment failures, natural disasters, and operator errors which would also serve to minimize the effects of radiological sabotage.

13.7.2.2 Physical Arrangements

The CRBRP site is in a remote location. It is unlikely that major civil disorders would occur at or near the plant area. The plant will be located on a peninsula formed by a meander of the Clinch River between river miles 14.5 and 18.6 near the center of a 1364-acre tract owned by and in the custody of the United States Government (see Section 2.1).

13.7.2.3 Owner-Controlled Area

Ultimately, a permanent access road to the plant will lead into the plant. During construction, a temporary construction road will lead into the construction area. The perimeter of the reservation will be marked prior to the completion of construction with signs to provide reasonable assurance that persons entering the area are aware they are on private property. Employee parking areas will be located outside the security barrier so that only plant vehicles and trucks making deliveries will need

to be admitted. While construction is in progress, the temporary construction road will be the only route of access to the Project. A continuous access control guard post will be maintained on this road for the duration of construction activities. Section 2.1 shows the reservation boundary of the owner-controlled area.

13.7.2.4 Protected Area

When all construction work is completed, there will be an 8-foot high perimeter security barrier enclosing the protected area. An isolation zone will be maintained both outside and inside the security barrier which meets or exceeds the NRC requirement as specified in 10 CFR 73.55-1980. A patrol road will be located inside this barrier. A sectionalized instrusion detection system designed to be self-checked and tamper-indicating will be located along the barrier with sensors located on or between it and the patrol road. Closed-circuit television (CCTV) systems using lowlight level cameras including some with zoom lens and remote pan and tilt controls will be used to provide a means of promptly viewing the sector or general area involved. Safeguards Information Figure 13.7-2 indicates compliance with 10 CFR Sections 73.20, 45, 46 and 55,-1980-82, and are treated as safeguards information in accordance with 10 CFR Section 73.21-1981.

13.7.2.5 Vital Equipment and Vital Areas

All vital equipment and material access areas will be located within a vital area or building which, in turn, will be located within a protected area. Doors and gates to vital areas and to other selected sensitive areas will be kept closed and locked at all times. Safeguards Information Figures 13.7-6 through 13.7-11 indicate compliance with ANSI N18.17-1973, Section 3.4, and other applicable guides and regulations.

As construction nears completion and the equipment is made operational, the doors and gates to vital areas will be identified by signs which state that entry through them will be with the permission of the shift engineer on a need basis. Upon completion of construction, these doors and gates will be controlled by a cardkey access control system.

The cardkey system will be self-checking and tamper-indicating and an emergency power source provided. The regular power supply and emergency supply will be supervised and the operation of each cardkey controlled door tested no less frequently than once each seven days.

All issues of cardkeys will be authorized by the Plant Manager according to individual needs of employees requiring access to areas controlled by the cardkey system. Each card in the system will be programmed individually and can be programmed out at any time if lost. The cards will be issued and returned daily to insure that they do not leave the site.

13.7.2.6 Alarm Station

All intrusion detection devices will annunciate in a continuously manned central alarm station, and in a secondary alarm station, both of which will meet the requirements of CFR 10 Subparagraph 73.46(e)(5)-1980.

Each sector of the outdoor intrusion detection system and the operation of each cardkey controlled door will be tested no less frequently than once each seven days. Onsite and offsite communication facilities will be tested at the beginning of each security force workshift.

13.7.2.7 Security Barrier

The protected area barrier will consist of an 8-foot high No. 9 gauge chain-link fence (7-feet of fabric and 3 strands of barbed wire on angle brackets). The alignment of the security barrier will have a minimum number of angles and curves to facilitate effective observation and maximum length sectors of the intrusion detection system.

13.7.3 Security Plan and Contingency Plan

The Plant Physical Security Plan will describe security measures used to minimize the potential for industrial sabotage, theft and/or diversion including access control, surveillance of vital equipment, and plans for responding to security threats and will be written in accordance with 10 CFR Paragraph 50.34(c)-1981. The Contingency Plan, which will be written to be mutually supporting with the security plan, will be written in accordance with 10 CFR 50.34(d)-1982. Both plans will be treated as Safeguards Information in accordance with 10 CFR Subparagraph 73.21 (b)(1)-1981 and Part 95-1980-82 as appropriate.

13.7.3.1 Access Control

The CRBRP will have a perimeter security barrier that encloses all vital areas. The plant will have two portals for normal access: (1) A personnel portal and (2) a nearby vehicle gate. General public visitors will not be permitted inside the security barrier. Employees and special visitors' parking areas will be located outside the security barrier. Vehicle access will be limited to those required for delivery of material, operations, maintenance, and security of the plant. Persons, packages, and vehicles will be subject to search upon entering, leaving, and while within the plant area.

There will be a minimum number of exterior accesses to the CRBRP buildings. All of them will have penetration resistant doors with frames, hinges, and locks or security devices designed to prevent forced entry and will be alarmed or cardkey controlled. These doors will be kept locked.

All persons authorized to enter the protected area unescorted will have had a satisfactory security check and emotional stability check and will have completed as a minimum a brief plant indoctrination and radiation protection course which describes plant organization and layout, controlled zones, radiation and contamination hazards, exposure limits and controls, elementary health physics, and pertinent sections of the site emergency plan.

Even those persons who are authorized unescorted access will have their movement limited by physical barriers, such as locked doors, to prevent them from entering areas containing vital equipment or areas of high radiation levels. Only those who need access to these areas will be provided means of entering. Access to vital areas and material access areas will be controlled to meet the performance objectives of 10 CFR Parts 11-1981-82 and 25-1982, and Sections 73.20-1981 and 73.45-1982.

When special visitors and other persons who have not completed this training enter the protected area, they will be escorted by an employee trained in radiation protection and plant emergency procedures. The escort will be responsible for the safety and security of the people in his charge until they leave the plant protected area.

13.7.3.2 Control of Personnel by Categories

Employees and visitors authorized unescorted access to the plant protected areas by the Plant Manager will be issued a photo-type identification (ID) badge with tamper-resistant features. These persons will be identified, issued a radiation detection badge and dosimeters, and then be admitted to the protected area. Other persons not issued ID badges who require escorts may be identified by personal recognization, TVA identification card, or other available identification media. They will be issued a numbered visitor's badge to be worn on their person while within the plant protected area. Access to vital areas and material access areas will be in conformance with the Performance Objectives of 10 CFR Parts 11-1981-82 and 25-1982, and Sections 73.20-1981 and 73.45-1982.

The only unescorted construction workers who may be inside the confines of the operating unit will be those selected to perform maintenance or other work before final acceptance of equipment. Upon being granted unescorted access by the Plant Manager, these persons will be issued a photo ID badge and given a brief security indoctrination course covering the evacuation procedure and relevant sections of the site emergency plan.

Contractor personnel, manufacturers' representatives, and other special visitors who require access to the plant will be logged in, badged, and escorted.

13.7.3.3 Access Control During Emergencies

Upon hearing of an emergency, the access portal will be locked to ensure controlled entry and exit. Special visitors who are onsite will be escorted to the access portal.

Plant employees will report to the predesignated stations from which they will be dispatched as needed to combat the emergency. All access control procedures will be compatible with the CRBRP Radiological Emergency and Contingency Plans.

13.7.3.4 Surveillance of Vital Equipment and Material Access Areas

Unit operators will continuously monitor the status of plant systems and equipment by means of annunciators, indicating lights, indicators, and recorders. New equipment or material will be inspected on delivery. Operating logs and computer printout data will be periodically examined for changes in equipment performance. Most equipment will be in continuous operation and any change will immediately be detected by the operator. Standby and emergency equipment will be periodically tested on a routine basis as required by the technical specifications. Procedures will be employed to control access to the material access area in accordance with 10 CFR Part 11-1981-82 and Sections 73.45-1982 and 73.46-1980. In addition, activities in the vicinity of the material access area will be monitored. The combination of these efforts should provide reasonable assurance that unauthorized physical changes in the status of components of equipment will not be undetected for long periods of time.

Accountability of fissile and fertile material is inherent in the design of the CRBRP refueling system for reasons other than security. After inspection at receipt, the assemblies will not be visually identified again until shipment of the irradiated assemblies. The assemblies will be mechanically identified prior to insertion into the core and subsequent to removal from the core as part of the reactor safety program. All movements of fuel within the plant will be monitored and/or recorded on the refueling system computer for inventory purposes and to insure reactor safety during core configuration changes.

13.7.3.5 Potential Security Threats

The security system will be designed to deter unauthorized persons from entering the protected and vital areas and to detect such attempts. Operating personnel will be trained to be alert for unauthorized persons and to appropriately notify the security force.

Detailed descriptions of decisions/actions regarding potential security threats will be included in the CRBRP Contingency Plan. The Contingency Plan will address actions in the event of an attempt at plant break-in or an indication of an attempt of theft or diversion or an actual theft, diversion or sabotage. Planned actions in the event of civil disturbances, bomb threats, and other emergencies, will be included. Detailed procedures will be provided plant employees so that they may cope with these and other events in the optimum manner possible. The Contingency Plan will be protected in accordance with the requirements of 10 CFR Section 73.21-1981.

13.7.3.6 Administrative Procedures

In the event of an incident of suspected sabotage or condition which threatens the security of the plant, the security force will notify the

Plant Manager and initiate a thorough investigation. A report will be prepared which includes as a minimum the cause of the event, extent of damage, if any, and action taken to prevent recurrence of similar event. Copies of the report will be sent to the Plant Manager. When appropriate, the Plant Manager will also report the situation to NRC.

Representatives of the Nuclear Power Security Section and Office of Power Quality Assurance and Audit Staff will make an annual audit of the CRBRP Physical Security Program for adequacy of content and performance. Based on their audit, they will make recommendations for revising and updating the plant and related plant procedures.

13.7.3.7 Test and Inspections

This information will be supplied in the CRBRP Physical Security Plan.

13.7.4 Transportation of Fuel

The transportation of fuel for CRBRP will be the responsibility of the Department of Energy, both for delivery of new fuel and removal of spent fuel. Requirements virtually identical in objective and scope to those set forth in 10 CFR Sections 70.20-1981, 73.25-1981, and 73.26-1981 will be met. All plans concerning moves of fuel will be controlled in accordance with the appropriate directives of the agency in charge, i.e., DOE or NRC.

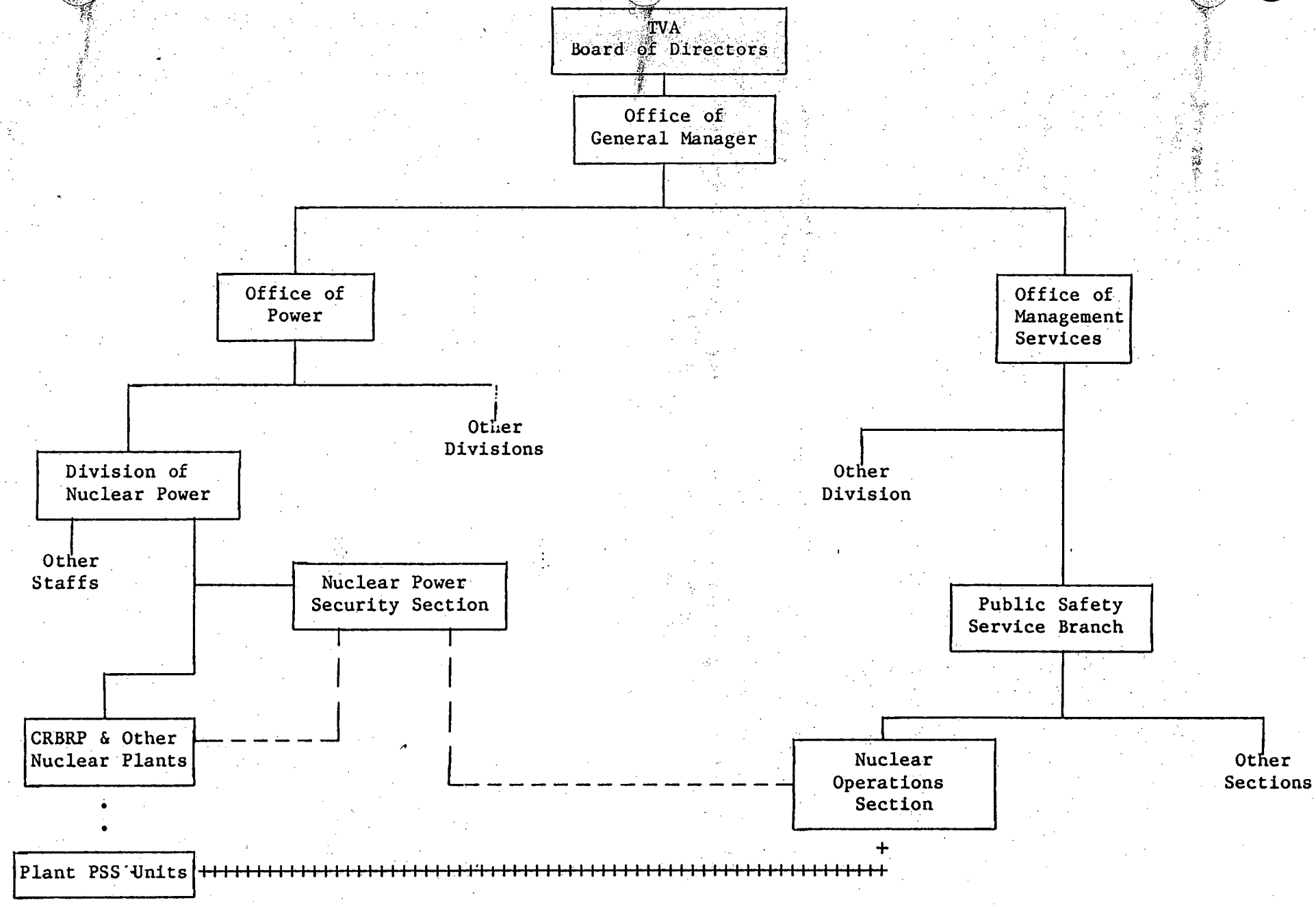

Figure 13.7-1
CRBRP Security Organization

— — — Coordination
++++++Administrative Responsibility
••••••Functional Responsibility

Figures 13.7-2 and 13.7-6 through 13.7-11 are considered as Safeguards Information and are not included in the PSAR.