CLINCH RIVER
BREEDER REACTOR PROJECT

PRELIMINARY SAFETY ANALYSIS REPORT

VOLUME 26

PROJECT MANAGEMENT CORPORATION

Question CS421.1

During meetings with the applicant and Westinghouse, several discussions have been held concerning the fact that the primary and secondary shutdown systems do not each, individually, comply with Section 4.7.3 of IEEE-279 on Control and Protection System Interaction. The applicant should document for inclusion in the PSAR the justification of the adequacy of the proposed design for complying with Section 4.7.3 of IEEE-279. This justification should include a discussion of the system adequacy with respect to control and protection system interaction during periodic testing of a protection system channel or when a protection system channel is out of service for maintenance. If the justification includes the use of a median selector for control signals, plans to periodically test the median selector during plant operation should also be discussed.

Response

The two PPS reactor shutdown systems, considered together, always meet Section 4.7.3 of IEEE-279.

The provision of two diverse and independent shutdown systems provides the plant with an unusually high degree of protection against common mode failure incidents.

Under normal operating conditions, and in the great majority of abnormal conditions, each system separately fully meets the requirements of IEEE-279.

However, in a limited number of situations, it is possible that during testing or maintenance of a channel which supplies signals to both protection and control, a single sensor failure could initiate plant control actions requiring protective action and simultaneously prevent proper protective channel response. Applying the criteria of Section 4.7.3 of IEEE-279, which requires the assumption of a second random failure for these channels, results in the assumption that the protective function in one of the systems would be disabled. In these situations, the redundant functions in the alternate system always provide protection as required by Section 4.7.3 of IEEE-279.

The likelihood of such potentially disabling situations is limited by the use in the control system of a median select arrangement which precludes response to abnormally high or low signals. However, when one protection channel is placed in the trip condition, a simultaneous sensor failure in a low direction could potentially result in disabling the protection system at the same time that a faulted control system calls for a power increase.

With regard to validation of the median selector, most failures of the median selector are self-annunciating (i.e., abnormal plant response is detected by the operator or subsystems within both shutdown systems leading to a plant trip). Other median selector failures (eg., output not following the true median input) occurring together with a sensor failure do not cause a plant response. In any case, median selector failures do not invalidate the performance of the related protection system. Nevertheless, functional testing of the median selector circuits is performed annually as part of the scheduled maintenance.

In the majority of situations, further built-in control features (such as built-in overall temperature loops or rod movement blocks related to alternate flux measurements) will prevent any such overpower conditions from developing.

Where this is not the case, as previously noted, protection is provided by the second independent protection system.

Section 4.7 of IEEE-279 deals with control/protection system interaction. There is no control/protection system interaction for the SCRS.

Question CS421.2

The staff requires that the applicant document how the CRBR primary and secondary shutdown systems meet GDC 20 through 29. Also, provide documentation showing the separation maintained between the shutdown systems, the independency of the shutdown systems, common mode failures of the shutdown systems (i.e., sharing of inverters, an overvoltage of over/under frequency in the Reactor Protection system power supply), the testability of the shutdown systems manual initiation for both systems, diversity of the shutdown system electrical circuitry components, and how each of the shutdown systems independently meet IEEE-279.

Response

10CFR50 GDC 20 through 27 are redefined as CRBRP GDC 18 through 25 and are addressed in PSAR Chapter 3.1.

GDC 28 and 29 are not included in the CRBRP GDC. However, the present design fully meets both criterion.

- Criterion 28 - The plant is designed to limit the consequences of postulated reactivity transients to acceptable levels. Events considered include the accidental withdrawal of single control rods or groups of control rods at conservative withdrawal rates. Also considered are rod drop accidents, accidents that lead to fuel rod motion due to the loss of hydraulic holddown forces, and accidents that cause cold sodium insertion.

- Criterion 29 - The Project has taken steps to assure an extremely high probability of accomplishing required safety functions in response to anticipated operational occurrences. Not only are applicable standards utilized, but an extensive program of qualitative and quantitative analysis and developmental testing is underway. The object of this Reliability Program is twofold: 1) enhance system reliability in areas where analysis shows improvement is desirable, and 2) verify component reliability.

Section 7.1 of the PSAR discusses separation criteria utilized in the design of the protection system. Section 7.2 includes a discussion of testability and manual initiation as well as of those design features which provide independence and freedom from common mode failure. These provisions ensure that under normal operating conditions, and the great majority of abnormal conditions, each shutdown system separately, fully meets the requirements of IEEE-279.

1. Extremely Unlikely Events

   The Primary Shutdown System is required to respond to all anticipated, unlikely, and extremely unlikely events. The Secondary Shutdown System is required to respond to all anticipated and unlikely events. The only extremely unlikely event to which the Secondary Shutdown System must respond is the safe shutdown earthquake. The allowable damage limits for the Secondary System are one level higher than for the Primary Shutdown System.

2. Control/Protection Interaction

Refer to the response to Question CS421.1.

Strict independence is maintained between the Primary and Secondary Shutdown Systems with three exceptions:

1. Instrument Ground

The plant has one instrument ground. Both shutdown systems use this same ground. However, physically separated cables are run to this ground from each instrument channel in the Primary and Secondary Shutdown Systems.

2. HTS Pump Trip

Both shutdown systems trip each HTS pump breaker through separate trip coils. The separate trip coils and relay logic used to drive them provide sufficient independence to prevent failure propagation from the pump trip circuits to the control rod trip circuits of either shutdown system.

3. Power Supplies

The Primary and Secondary Shutdown Systems obtain power from the same three power divisions. Each power division utilizes separate 1E uninterruptible power supplies including batteries, rectifiers, inverters, etc. Which are designed to prevent transient electrical power fluctuations. Nevertheless, mitigating features have been provided in the design including:

- o Isolation of 1E power division from potential transient sources,
- o surge suppression by the inverters,
- o power supplies utilizing protective devices (i.e., circuit breakers, fuses, varistors) filtering, isolation transformers, overcurrent and overvoltage trips, and component derating.

Question CS421.3

Provide a list of safety grade trips and non-safety grade trips for the Reactor Protection System. Provide confirmation that credit will be taken for only the safety grade trips in the analysis of Chapter 15.

Response

All trips in the Reactor Shutdown System are safety grade and are listed in Table 7.2-1. Therefore, any Reactor Shutdown System trips used in Chapter 15 are safety grade.

Question CS421.4

The applicant should formally submit a diagram of the auxiliary feedwater system showing the division assignments for all valves and safety grade instrumentation and controls. A discussion should be included to indicate the normal position and position upon loss of power of each valve. In your presentation, and in Section 7.4.1.1.6, credit is taken for the feedwater isolation valve to fail safe in the open position upon loss of electrical power. Justify this fail-safe analysis for all incidents (i.e., hot shorts, power supply overvoltage, etc.) that could prevent operation of this isolation valve.

Response:

Figures 5.1-5 and 5.1-5a of the PSAR (attached) have been marked up (Figure QCS421.4-1, 2) to show the power division assignments for all valves and safety grade instrumentation. The controls for the devices are not shown, however, the power assignment is the same as that of the valves, louvers, and fan blade pitch control being actuated. The normal position and failure position of the valves are shown in Figures 5.1-5 and 5.1-5a.

As shown in Figure 5.1-5 there are six isolation valves, two in parallel to each steam drum. One valve supplies water from the electric driven pumps, the other, from the turbine drive pump. Each capable of supplying 100 percent water flow to the steam drum. These two valves are supplied power from separate Class 1E power divisions. The failure of one valve to open on demand would not result in the loss of water to a steam drum, as the required water would be supplied by the parallel line.

The isolation valves (52AFV103A-F) are closed in normal operation. They open automatically on SGAHRS trip or when the steam drum level drops to 8" below normal water level (NWL). Automatic closing occurs when the steam drum level rises to 8" above NWL for the motor driven pump AFW supply and 12" above normal water level for the turbine driven pump AFW supply.

Each isolation valve is supplied from a regulated 480 VAC power supply and is designed to operate within the over voltage tolerance allowed for that power supply.

In addition, Figure 5.1-5 shows that there are flow control valves in series with these isolation valves. Each of the flow control valves is supplied with power from a Class 1E power division different from the Class 1E power division supplied to the isolation valve in the same line.

The flow control valves (52AFV104A-F) are open during normal plant operation. They modulate to control the auxiliary feedwater flow to maintain steam drum level.

Each flow control valve is supplied from a 135 VDC power supply and is designed to operate with the voltage tolerances allowed for that power supply.

The design provides for failure of the control power to result in a "fail-safe" position (open) for the isolation valve, and an "as-is" position for the flow control valve; therefore, the capability to maintain the AFW supply has been assured.

The wiring and controls for the isolation or flow control valves in the line supplying water to any steam drum are in separate Class 1E power divisions and separation is provided in accordance with IEEE-383. Hot shorts between the two valves supplying the same steam drum will not occur. The only hot short which could occur would be within the same power division between the valve and control circuits. This could result in two of the six isolation valves not opening when called upon. The two valves that fail, being in the same power division supply separate steam drums. Since there is a 100 percent redundant water supply to each steam drum, a failure of two of the six isolation valves would not result in the loss of water to any of the three steam drums. A short between two Class 1E power divisions is not a credible event because of the separation between divisions.

Any hot short within a given division in the local panel will not affect the control elements in the main control room area, and vice versa, because isolators are located between them. Shorts or voltage spikes might cause circuit current to exceed the current limitations of the control circuit fuse and consequently the failed (open circuited) power supply would result in a "fail-safe" (open) position of the AFW isolation valve. The flow control valve in the same power division would fail as-is (open) at this time because of the failure in the control circuit.

Upon the loss of power the isolation valves are driven to their fail-safe de-energized positions by accumulator pressure, which is released and applied to the bottom of the actuator cylinder. The flow control valves fail in the as-is position. In the unlikely event of a valve, or the even more unlikely event of all valves, in a power division failing to assume their de-energized positions, the operator can manually operate these valves to accomplish a safe shutdown under any set of conditions.

The above has discussed the ability to provide water to the steam drums with the loss of a division of power; however, if there is a break in the feedwater line to a steam generator or a steam line in a steam generator loop, the operator has the capability to remotely close the flow control valve in series with the isolation valve that failed in the open position. In addition, the operator could also manually operate the valves to isolate the AFW supply from the pipe break.

If there is a break in the auxiliary feedwater line to one steam generator and a failure in the division of power that does not feed the affected loop, the loop would isolate the break. The other loops would continue to supply feedwater to the steam drums as the isolation valve affected by the power failure would go to its failure position (open) and the affected flow control valve would remain in its normal position (open). If the power failure is such that it prevents an isolation valve from obtaining its failure position,

the affected flow control valve on the parallel line would remain in its normal position (open), and flow would be controlled by the opening and closing of the isolation valve on the other division of power. The flow would be maintained to the steam drum by either the motor driven or turbine driven pumps.

The AFWS valves are safety-related and are qualified to perform their function in the worst accident environmental condition they are expected to experience. The isolation valves and the flow control valves are provided by different suppliers and use different types of actuators. The isolation valves are gate valves with electro-hydraulic actuators that have internal accumulators to provide the reserve energy to take the valves to their failure position. The flow control valves have internal trim designed to permit throttling the flow as well as providing shutoff capability. These valves have an electro-hydraulic actuator that permits modulation of the valve position and fails in position. Because of the different valve suppliers and the different type of actuators, no common failure mode is anticipated.

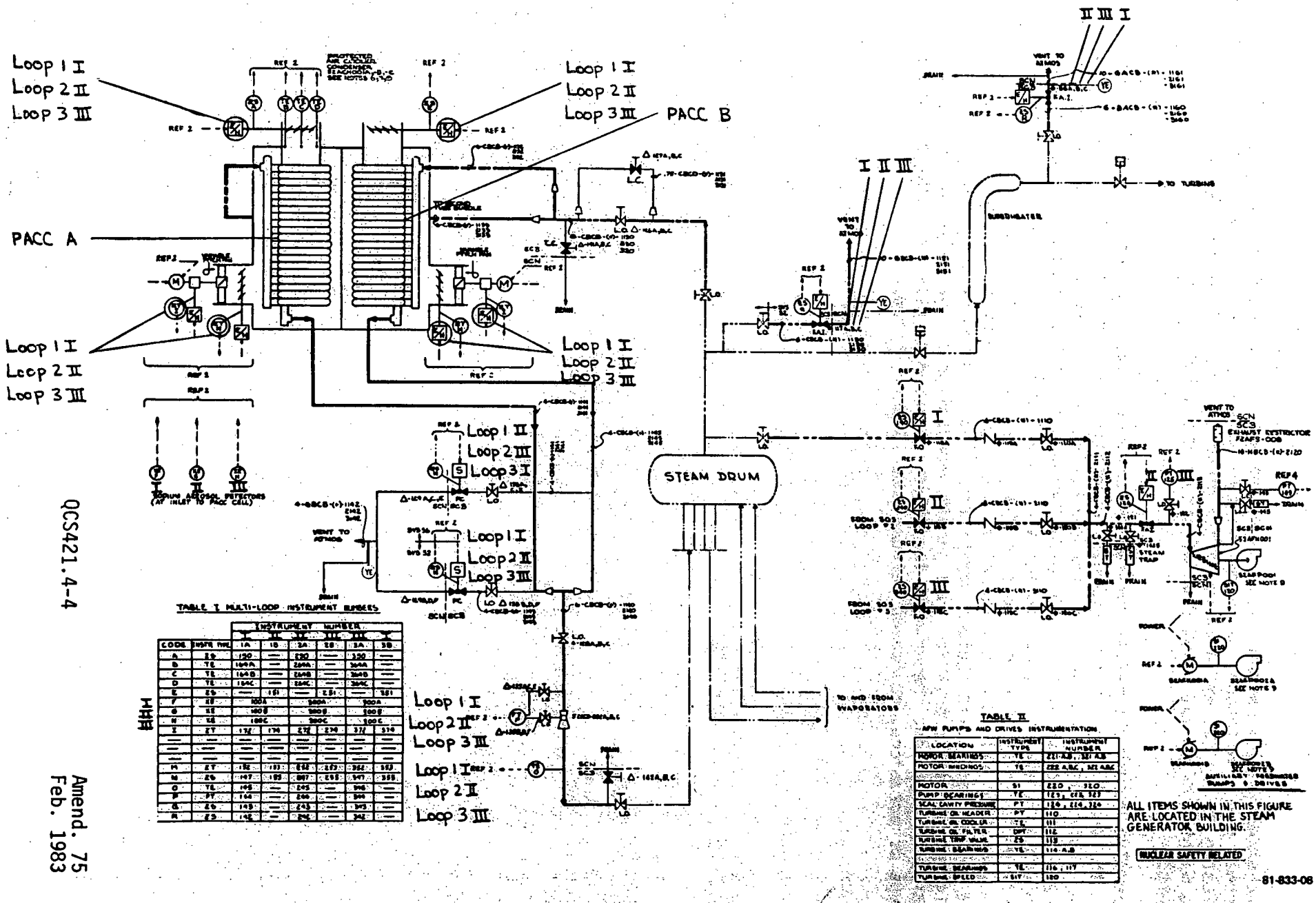

TABLE I MULTI-LOOP INSTRUMENT NUMBERS

CODE	INSTR. TYPE	INSTRUMENT NUMBER I	II	III	IV	V	VI
A	ZS	150	—	250	—	350	—
B	TE	169A	—	269A	—	369A	—
C	TE	164B	—	264B	—	364B	—
D	TE	164C	—	264C	—	364C	—
E	ZS	—	151	—	251	—	351
F	ZS	100A		200A		300A	
G	TE	100B		200B		300B	
H	TE	100C		200C		300C	
I	ZT	174	175	274	275	374	375
—	—	—	—	—	—	—	—
—	—	—	—	—	—	—	—
—	—	—	—	—	—	—	—
M	ZT	192	193	292	293	392	393
N	ZS	197	198	297	298	397	398
O	TE	195	—	295	—	395	—
P	PT	166	—	266	—	366	—
Q	ZS	149	—	249	—	349	—
R	ZS	148	—	248	—	348	—

TABLE II

AFW PUMPS AND DRIVES INSTRUMENTATION

LOCATION	INSTRUMENT TYPE	INSTRUMENT NUMBER
MOTOR BEARINGS	TE	221-A,B , 321 A,B
MOTOR WINDINGS	TE	222 A,B,C , 322 A,B,C
MOTOR	SI	220 , 320
PUMP BEARINGS	TE	123 , 124 , 125
SEAL CAVITY PRESSURE	PT	126 , 214 , 326
TURBINE OIL HEADER	PT	110
TURBINE OIL COOLER	TE	111
TURBINE OIL FILTER	DPT	112
TURBINE TRIP VALVE	ZS	113
TURBINE BEARINGS	TE	114 A,B
TURBINE BEARINGS	TE	116 , 117
TURBINE SPEED	SIT	120

FIGURE QCS 421.4-1

STEAM GENERATOR AUXILIARY HEAT REMOVAL SYSTEM PIPING AND INSTRUMENTATION DIAGRAM

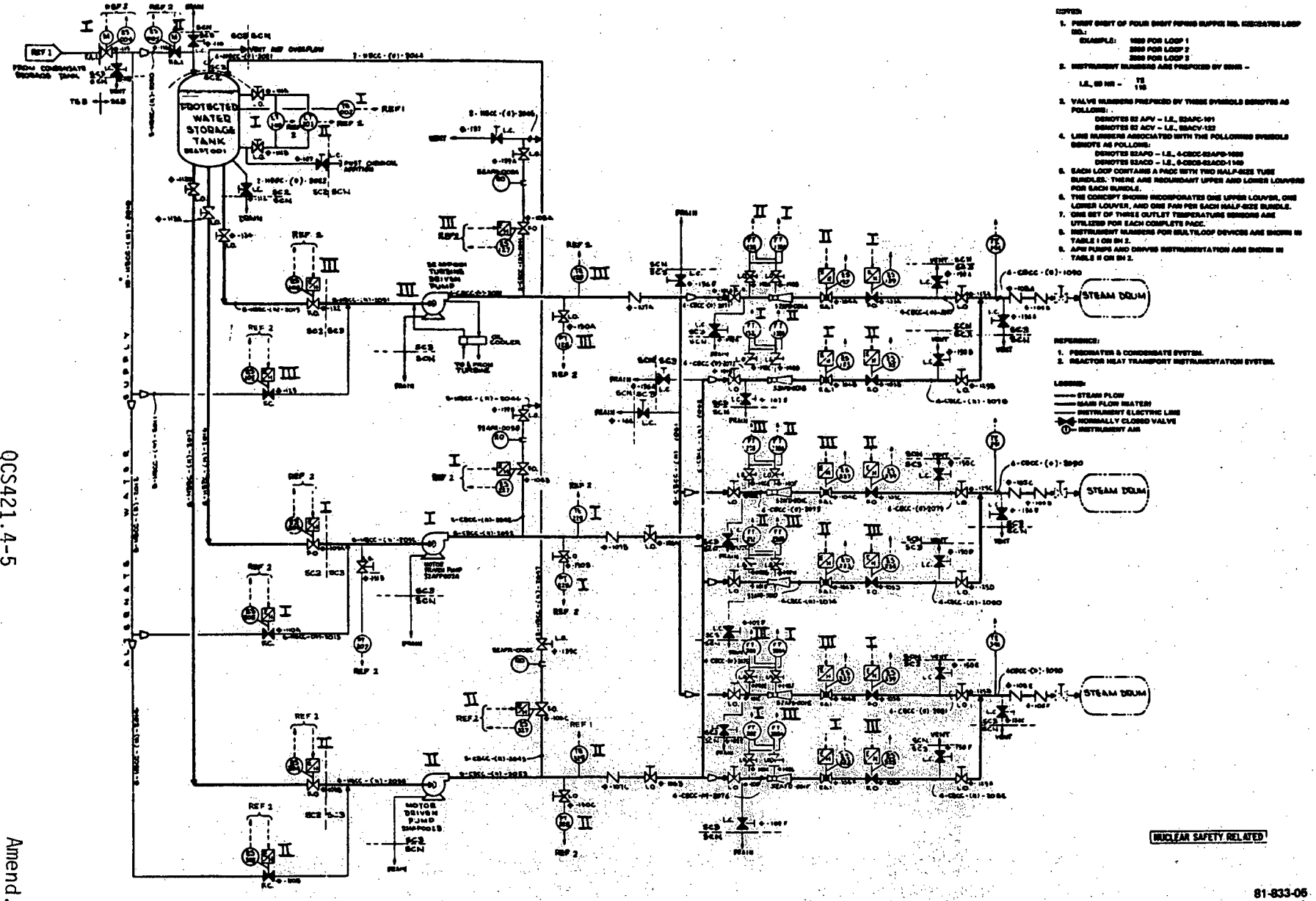

FIGURE QCS 421.4-2

STEAM GENERATOR AUXILIARY HEAT REMOVAL SYSTEM PIPING AND INSTRUMENTATION DIAGRAM

Question CS421.5

Section 7.6 of the PSAR states that the Radiation Monitoring System contains safety related components which are discussed in Chapter 11. However, Chapter 11 does not discuss these safety related components. Correct the PSAR to identify the safety related compoents of the Radiation Monitoring System.

Response

A PSAR amendment will be submitted by July 1982 which will identify safety related components of the Radiation Monitoring System. Safety-related process and effluent monitors will be described in Section 11.4.2.2.8 and identified in Table 11.4-1. High range containment area monitors which are safety related will be identified in Section 12.1.4.1.

Question CS421.06

The CRBR Table 7.1-3 of Chapter 7.0 page 7.1-1 Amendment 57 November 1980 lists the applicable IEEE Standards for the safety related instrumentation and control systems. The following listed standards need to be updated to the shown revision.

As Listed	Revise to
IEEE-308-1974	IEEE-308-1978
IEEE-317-1972	IEEE-317-1976
IEEE-334-1971	IEEE-334-1974
IEEE-336-1971	IEEE-336-1977
IEEE-338-1971	IEEE-338-1977
IEEE-352-1974	IEEE-352-1975
IEEE-379-1972	IEEE-379-1977
IEEE-384-1974	IEEE-384-1977

Response

Table 7.1-3 has been updated to reflect the new revision dates of the IEEE Standards indicated in the question where applicable to the CRBRP design. IEEE 334 is being deleted from Table 7.1-3 since it is discussed in Sections 8.3.1.2.7 and 8.3.1.2.25.

Question CS421.7

Various instrumentation and control system circuits in the plant (including the reactor protection system, engineered safety features actuation system, instrument power supply distribution system) rely on certain devices to provide electrical isolation (PSAR 7.2.2) capability in order to maintain the independence between redundant safety circuits and between safety circuits and non-safety circuits. Therefore, provide the following information:

a) Identify the types of isolation devices which define the Class 1E boundary for interfaces between the safety circuits and non-safety circuits.

b) Provide the acceptance criteria for each isolation device identified in response to part a above.

c) Describe the type of testing that will be conducted on the isolation devices to ensure adequate protection against EMI (i.e., noise), short-circuit failures, voltage faults, and/or surges.

Response

I. NSSS

Within the NSSS, Class 1E isolation devices are applied to the interconnections of Class 1E and non-Class 1E circuits, and to Class 1E logic circuits of redundant divisions. For devices isolating instrument signals, the normal operating level on the isolated output side is < 50 volts (AC or DC) with signal levels in the milliampere range. For control signals, the normal operating level on the isolated output side is 120 VAC/125 VDC. Isolation devices are applied as follows:

A. LED - Phototransistor Pairs

(a) These devices are used to isolate Class 1E low energy instrument level signals.

(b) The acceptance criteria is for the isolation device to withstand 1250 VAC (RMS) for 1 minute without damage and to provide 10^{10} ohms isolation resistance.

(c) Type testing is conducted in an as-installed configuration by applying 1250 VAC (RMS) for 1 minute across the isolation barrier with the unit at maximum temperature and humidity. This is followed by a megger check for isolation resistance.

B. Transformer/LED - Phototransistor Pairs

(a) These devices are used to isolate the Class 1E instrument level analog input signals from the analog output signals used in non-1E systems (control, indication).

(b) The buffers meet the isolation acceptance criteria of Part E of this response.

(c) Type testing is performed with 250 VAC (RMS) and ± 170 VDC accident potentials.

(d) In addition, the isolation barrier is tested to 1250 VAC for one minute with acceptance based upon no arcing or damage.

C. Relays

(a) Relays are used to provide isolation between redundant channel outputs from the Reactor Shutdown System for channel inputs to the heat transport system pump trip logic and for Class 1E/non-Class 1E isolation of channel trip indications to the annunciator and computer. Inputs may be control level or instrument level signals.

(b) For relays operating at control signal levels, the relay must withstand 1250 VAC coil to contact for one minute without arcing/damage. For instrument signal levels, relays must withstand 500 VAC coil to contact, and contact to contact, for one minute without arcing or damage.

(c) Type testing is performed by applying the appropriate voltage from (b) across the isolation barrier with no arcing or damage. This is followed be a megger check for isolation resistance.

D. Isolation Transformers on AC Power Inputs

(a) Isolation transformers with Faraday shields are required.

(b) Power supplies must be capable of withstanding a ± 20% voltage transient (surge) and a ± 10% frequency transient with respect to design center values without damaging the loads connected to it. Loads must be capable of normal on-off cycling of the power supply without damage.

(c) Equipment is checked for proper operation with a ± 10% voltage and ± 5% frequency variation of the power supply input.

E. Acceptance Criteria for Buffers

Electronic buffers are functionally specified which will not require recalibration or adjustments of any nature after being subjected to the following:

1. Short circuit of the buffer output and short to ground of the buffer output.

2. Open circuit of the buffer output.

3. Application of 250 VAC 60 Hz from either output connection or power supply connection to chassis ground.

4. Application of 170 VDC of either polarity from either input connection or output connection or power supply connection to chassis ground.

5. Application of 250 VAC 60 Hz from either output connection to either input connection.

6. Application of 170 VDC of either polarity from either output connection to either input connection.

7. Application of 250 VAC 60 Hz directly across the output connections.

8. Application of 170 VDC of either polarity directly across the output connections.

9. AC common mode interference shall not exceed ± 0.02% of span per volt when supplied from a 60 Hz source. DC common mode interference shall not change calibration by more than ± 0.01% of span per volt.

10. Calibration change due to normal mode interference from a 60 Hz source equal to ten times input span of no more than ± 0.1% of output span.

11. The peak to peak noise and ripple together shall not exceed 0.1% of output span when measured at the output of the buffer. Input noise feedback from the buffer into the PPS input signal shall be less than 0.01% of input span.

12. Insulation resistance shall not be less than 20 megohms at 24°C (75°F) and 500 volts, when measured on the completed assembly. In addition the reliability, maintainability, design life, and fail safe features shall be analyzed by the Supplier and included in the supplied documentation.

II. BOP

For BOP systems either OPTO isolators or relays are used for isolation. The acceptance criteria and type of testing used for BOP Class 1E isolators are:

a) The acceptance criteria is to withstand 1250VAC (RMS) and 1250VDC for one minute without damage and to provide a minimum of 10^9 ohms isolation resistance.

b) Type testing is conducted in an as-installed configuration by applying the voltages specified in 3(b) above, for one minute across the isolation barrier with the unit at maximum temperature and humidity. This is followed by a megger check across the barrier for isolation resistance. All systems inputs and outputs are tested for Surge Withstand Capability per IEEE-472.

Question CS421.8

Document the design provisions for conducting response time tests of BOP and NSSS protection systems in accordance with R.G. 1.118. Identify safety-related systems that do not have provisions for response time testing. Discuss the techniques to be used to periodically measure safety-related sensor time responses.

Response

The CRBRP Protection systems are being designed to comply with R.G. 1.118. The NSSS protective systems (RSS, CIS and SGAHRS initiation) use an overlap testing technique to verify that system response times are within acceptable limits. The following features are provided for response time testing:

A. For the neutron detectors, detector-cable capacitance checks are made with the detectors and cables in the as-installed configuration to identify increases in capacitance which could affect time response of the channel.

B. For the reactor vessel level instruments, the sensors are checked in the as-installed configuration by inserting a step increase in the primary coil excitation current at a steady state sodium temperature and level and monitoring the increase in secondary coil output voltage due to the increase in magnetic field strength.

C. For channel response time testing, not including sensors, a test signal source is connected to the channel which can simulate the sensor input over the entire range. Measurements of channel input changes and channel output changes are recorded. These tests include istrument channel equipment and the comparator trip outputs to the logic trains. Where protective functions use two or more variables, channel time response is determined for each input to the function one variable at a time. The remaining variables are adjusted to a conservative value within the normal operating range.

D. The Primary RSS and Steam Generator Auxiliary Heat Removal System (SGAHRS) initiating logic time response is checked during functional testing of the logic. Pulses are inserted into the redundant instrument channel comparators to simulate the eight possible combinations of trip and reset. For test inputs with two or more redundant channels tripped, the logic output is checked for a trip condition. This trip output must be detected within the propagation delay limits of the logic train or it is flagged by the tester as a failure.

E. The Primary RSS scram breaker time response is checked by inserting trip signals to the logic train and monitoring the time to current interruption on the output side of the breakers. Each breaker is tested separately to assure compliance with response time requirements.

F. The Secondary RSS logic is tested by inserting a trip input to the comparator and monitoring the time required until the current to the solenoid scram valve in interrupted.

G. Time response testing of the Secondary RSS scram solenoid valves is included with testing of the Secondary rods.

H. The CIS logic and breakers are tested in a similar fashion to D and E.

I. Response time measurement of pressure or differential pressure is performed by applying a pulse with a specific ramp rate and comparing the output of a tested transducer with the output of a fast acting reference transducer. The output of both transducers is recorded on a strip chart for subsequent computation of the response time.

J. Response time measurement of thermocouples or RTDs is facilitated with the use of a loop current step response analyzer. The loop current step response analyzer sends a pulse of current to the thermocouple or RTD. The analyzer receives time varying voltage data from the temperature sensing device, digitizes and stores test data. The analyzer then computes the sensor time constant and displays this on a panel meter.

K. A sweep generator shall be provided for measuring pump speed signal conditioning time response. The sweep generator shall have an auxiliary voltage output that is proportional to frequency output. The sweep generator shall supply an input to the pump speed signal conditioning modules and the proportional voltage output will be supplied to an oscilloscope. The output of the pump speed signal conditioning modules will also be supplied to the oscillograph.

L. Response time measurement of the sodim flow signal conditioning modules shall be accomplished utilizing a millivolt generator that provides a ramp output. The methodology used is analagous to the methodology described in the previous paragraph.

M. A sensor response time monitor will be used to determine if time response degradation has occurred in PPS channels. The device samples the normal fluctuations around the average valve of the sensor output and determines the time response characteristics of the sensor based on the number of times the output signal crosses its average valve in a fixed time interval. This device may be used on RTDs, thermocouples, pressure sensors, level sensors, and flow sensors as a method of determining time response degradation of PPS channels. Use of this methodology is fast and efficient but cannot be used for initial time response measurements. Only time response degradation can be measured.

N. A test and calibration signal source is permanently installed on each PPS Shutdown Panel. The signal source is used to inject a step test signal for comparater response time measurement. The step test signal is inserted into the channel to cause a PPS comparator to trip. The output of the comparator is compared to the output of the test signal and time response characteristics are calculated.

O. SGB flooding is detected with temperatures and humidity sensors. When flooding is detected the feedwater isolation valves shut to prevent damage to SGAHRS components. A method of verifying humidity sensor time response characteristics is to be determined.

P. Radiation monitors are provided with a built-in check source. The check source is normally shielded from the detector, and the shield is solenoid operated. Response time can be measured by electrically actuating the solenoid operated shield, and obsreving the monitor output, taking due account for solenoid response time.

Q. Gas detectors can be tested similarly to pressure instruments by injecting known composition of gas through the test valves and observing the instrument output.

R. Flow sensors whose operation is based on the hot wire technique are not tested in situ. They would be removed from the pipe or duct and placed in a test fixture in which flow can be suddenly terminated, and the flow sensor output observed.

S. Sound powered phone jacks, test cabling, and test points are incorporated into the design to facilitate the testing methods described above. Most of the testing hardware is portable but some permanently mounted equipment is provided to minimize the effort required to measure the time response of the PPS comparaters.

Question CS421.9

Identify where instrument sensors or transmitters supplying information to more than one protection channel, to both a protection channel and control channel, or to more than one control channel, are located in a common instrument line or connected to a common instrument tap. The intent of this item is to verify that a single failure in a cmmon instrument line or tap (such as break or blockage) cannot defeat required protection system redundancy.

Response:

Redundant protection channels, protection channels and control channels, or more than one control channel instrumentation sensors or transmitters are not located in common instrument lines or taps. Therefore, the required protection system redundancy will not be defeated by a blockage or breakage of an instrument line or tap.

Question CS421.10

Identify any sensors or circuits used to provide input signals to the protection system which are located or routed through non-seismically qualified structures. This should include sensors or circuits providing input for reactor trip, emergency safeguards equipment, and safety grade interlocks. Verification should be provided that the sensors and circuits meet IEEE-279 and are seismically and environmentally qualified. Testing or analyses performed to insure that failures of non-seismic structures, mountings, etc., will not cause failures which could interfere with the operation of any other portion of the protection system should be discussed.

Response

All sensors and circuits that provide input signals to the protection system are located and routed through seismically qualified structures, are designed to IEEE-279 criteria, and will be seismically and environmentally qualified.

Question CS421.11

Verify that a failure modes and effect analysis will be performed for each of the ESF systems identified in Section 7.3.1.

Response

Section 7.3.1 only discusses the Containment Isolation System (CIS). The CIS must meet IEEE-379 which requires an analysis to show compliance with the single failure criteria. Although the FMEA is an acceptable format for this analysis, it is not the only approved of method. Therefore FMEA's will not necessarily be performed, however, analyses of the CIS per the requirements of IEEE-379 will be made.

Question CS421.12

The staff has recently issued Revision 2 to Regulatory Guide 1.97, "Instrumentation for Light-Water-Cooled Nuclear Power Plants to Assess Plant and Environs Conditions During and Following an Accident." This revision reflects a number of major changes in post-accident instrumentation, and includes specific implementation requirements for plants in the license review stage. Discuss this Reg. Guide and how it is applicable to the Breeder.

Response

The requirements of Regulatory Guide 1.97, Revision 2 is applicable in principle to CRBRP. Proper provisions for instrumentation to monitor plant variables and systems during and following an accident are necessary for CRBRP as they are for an LWR plant. However, the requirements delineated in Regulatory Guide 1.97, Rev. 2, are specifically for LWR plants and a different set is required for LMFBR's because of fundamental technological differences affecting their design and operation. For a discussion of the implementation of these requirements see Appendix H, Item II.F.3, Instrumentation for Monitoring Conditions (Reg. Guide 1.97) of the PSAR.

Question CS421.13

Provide and describe information for NSSS and BOP safety-related setpoints that verifies that environmental error allowances will be based on the highest value determined in qualification testing.

Response

Performance requirements are part of the input in calculating safety-related setpoints. All NSS and BOP safety-related instrumentation and control equipment shall meet the performance requirements indicated in the ordering data under any combination of environmental conditions as defined in the applicable equipment specifications. The environmental conditions include normal and accident environments.

If test data obtained during equipment qualifications are greater than the specified performance requirements the instruments setpoints will be suitably adjusted to assure conservative margins.

Requirements covering instrumentation performance under worst case environmental conditions have been specified for the Reactor Shutdown System (RSS) equipment. These performance requirements are part of the input used in calculating the RSS safety-related setpoints. If the test data obtained during equipment qualification indicate that the predicted allowance for environmental errors is exceeded, the RSS setpoints will be suitably adjusted so as to ensure the same conservative margins.

Question CS421.14

Discuss the CRBR design pertaining to bypassed and inoperable status indication. As a minimum, provide information to describe:

1. Means to be used for compliance with the recommendations of R.G. 1.47.

2. The design philosophy to be used in the selection of equipment/systems to be monitored.

3. How the design of the bypass and inoperable status indication systems will comply with positions B1 through B6 of ICSB Branch Technical Position No. 21.

The design philosophy should describe as a minimum the criteria to be employed in the display of inter-relationships and dependencies on equipment/systems and should insure that bypassing or deliberately induced inoperability of any auxiliary or support system will automatically indicate all safety systems affected.

Response

The following responds to items 1, 2 and 3:

1. A discussion regarding compliance with R.G. 1.47 is provided in new PSAR section 7.5.12.

2. The safety functons and systems to be monitored by Inoperable Status Monitoring System (ISMS) are based upon Engineered Safety Features of Chapter 6 of the PSAR and are shown in the Table 7.5-4 of PSAR Section 7.5. There are 2 active safety systems which are not included in ISMS: the Reactor Shutdown System, which provides separate indication, and the Containment Isolation System, for which no bypasses or deliberately induced inoperable states have been identified. (Reactor Shutdown System bypasses are discussed in Section 7.2.1.1 of the PSAR.) The design of ISMS will employ the following steps to ensure that the system inter-relationships and dependencies on auxiliary systems are properly identified.

   - For each system and subsystem in the attached table, the states of the components which lead to system inoperability will be identified.

   - The Maintenance Outline Procedures and Operating Outline Procedures will be reviewed to identify any maintenance testing, or surveillance activities which would cause any active component to be bypassed or inoperable.

   - The results of the first two items will be combined to define the components to be monitored and to develop the logic for identifying inoperable systems per Regulatory Guide 1.47.

- In addition, the auxiliary and support systems required for operation of all active components in the safety systems will be identified and the above 3 steps repeated for these identified auxiliary and support systems. Inoperability of these auxiliary and support systems would be indicated by auxiliary system inoperability indications and an indication of the inoperability of the affected components.

3. The design of the CRBRP bypass and inoperable status indication systems is intended to comply with positions B1 through B6 of ICSB Branch Technical Position No. 21 as follows:

   BTP1. ["The bypass indicators should be arranged to enable the operator to determine the status of each safety system and determine whether continued reactor operation is permissable."]

   Bypass indication for safety systems is to be combined on a single ISMS indicator panel with separate indications for each of the following subsystems: (Ref. PSAR Sec. 7.5.12)

   - Decay Heat Removal System
   - Fuel Storage Heat Removal System
   - Control Room Habitability
   - Annulus Filtration
   - Reactor Service Building (RSB) Filtration

These dedicated indicators are activated whenever a system is determined bypassed or inoperative.

In addition, the ISMS is supported by Plant Annunciator System (PAS) and the Plant Data Handling and Display System (PDH&DS), and changes in the safety system status are transmitted to the PAS for audible and visual annunciation to the operator. PDH&DS cathode ray tube (CRT) displays may be used to provide the operator information about safety systems.

   BTP2. ["When a protective function of a shared system can be bypassed, indication of that bypass condition should be provided in the control room of each affected unit."]

   CRBRP shares no safety system with other units.

   BTP3. ["Means by which the operator can cancel erroneous bypass indications, if provided, should be justified by demonstrating that the postulated cases of erroneous indications cannot be eliminated by another practical design."]

   Activation of bypass indication is provided by a computer program which is not accessible to the plant operator. Cancellation of bypass indication is normally only possible through removal of the condition which caused the bypass indication (e.g., reclosing of a critical valve or breaker). If the condition is erroneous, the cause of the error (e.g., a short-circuited wire) must be determined and corrected in order to cancel the bypass indication.

BTP4. ["Unless the indication system is designed in conformance with criteria established for safety systems, it should not be used to perform functions that are essential to safety. Administrative procedures should not require immediate operator action based solely on the bypass indications."]

The CRBRP bypass and inoperable status indication system is not used to perform functions essential to safety. CRBRP operating procedures will not require immediate action in response to bypass indications.

BTP5. ["The indication system should be designed and installed in a manner which precludes the possibility of adverse effects on plant safety systems. Failure or bypass of a protective function should not be a credible consequence of failures occurring in the indication equipment, and the bypass indication should not reduce the required independence between redundant safety systems."]

The ISMS equipment shall be isolated from the associated safety related equipment so as to preclude any abnormal or normal action of the ISMS from preventing the performance of a safety function. It is intended that all electrical input connections to ISMS from safety related equipment are electrically isolated at the safety related equipment.

BTP6. ["The indication system should include a capability of assuring its operable status during normal plant operation to the extent that the indicating and annunciating function can be verified."]

The ISMS will provide a means of verifying that the indicator lights are functional.

Question CS421.15

Identify and document where microprocessors, multiplexers, or computer systems may be used in or interface with safety-related systems.

Response:

Many microprocessors, multiplexers, and computers are used in CRBRP systems; however, in general, they are used in non-Class 1E applications. Whenever a microprocessor, multiplexer or computer acquires a Class 1E signal, that signal is isolated by a qualified Class 1E isolator before being utilized by a non-Class 1E system.

The two systems which use microprocessors, multiplexers or computers for Class 1E applications are the Solid State Programmable Logic System (SSPLS) and the Radiation Monitoring System. Information about these systems is provided below. The Plant Data Handling and Display System (PDH&DS) is the largest computer system used in the plant. Information about this system is also provided below.

The Radiation Monitoring System has Remote Processor Stations which are microprocessor based, radiation monitoring electronic and communication assemblies. PSAR paragraph 11.4.2.1 describes the Remote Process Stations. The microprocessor receives raw count rate and process system data, and manipulates the data into the desired form. Data exchange and monitor control is via channel dedicated multiplexed signal paths. Non-Class 1E equipment can exercise control over a Class 1E radiation monitor. Any data extracted from the Class 1E monitors for use in non-Class 1E equipment is via Class 1E grade buffers.

The Solid State Programmable Logic System controls and actuates safety-related, Class 1E equipment. It contains the control logic, signal conditioners, isolation devices, and auxiliary circuits. The SSPLS can potentially use microprocessor based circuitry. The SSPLS will be qualified to IEEE 323, 344 and 383 as required for all Class 1E devices in order to preclude common mode failures. In addition, the SSPLS is comprised of three (3) separate and redundant safety-related systems so that a failure in a system will not affect any component or device in the other system. Also, all motor operated or pneumatically actuated valves controlled by the SSPLS can also be operated or actuated manually. Pumps, fans, and dampers, however, required the SSPLS in order to operate. PSAR paragraph 8.3.1.1.2 describes the SSPLS.

The solid state programmable logic system (SSPLS) can potentially use microprocessor based circuitry for control of safety-related equipment. Multiplexers and computers are not used in SSPLS.

The SSPLS will be utilized to control categories of equipment from the control room and remote shutdown panels such as: Circuit breakers and contactors for motors, chillers, solenoid valves, etc.

The SSPLS will receive manual inputs from the control pushbuttons and inputs from the field and other equipment for control of each device. The SSPLS will perform the necessary logic operations and interlocking functions and provide final outputs to each piece of equipment to be controlled. It contains control logic, signal conditioners, Class 1E to non-Class 1E isolation devices, power supplies and auxiliary circuits. The SSPLS equipment will be qualified to IEEE Standards 279-1971, 323-1974, 344-1975 and 383-1974 as required for all Class 1E equipment. The SSPLS is comprised of three (3) separate and functionally redundant safety-related divisions such that the failure of one division will not affect any component or equipment of the other two divisions. Equipment of different safety divisions are located in separate cells of the plant. Each of the three safety divisions has the capability to safely shutdown the plant. In addition, each functional circuit has been provided with dedicated components such that a circuit or component failure will only affect the operation of a single equipment. This will be achieved whether discrete logic components or microprocessors are used in the design of the SSPLS system.

Microprocessors, if used, will be tested and qualified to meet all requirements applicable to Class 1E equipment as described above. In addition, the microprocessor based circuitry will be dedicated to control only one device so that failure of the microprocessor will not affect the failure of any other controlled component.

When microprocessor based systems are used, they will meet the following requirements:

Modules using microprocessors shall be capable of being tested on a discrete basis.

SSPLS cards shall not use multiplexing.

Each microprocessor shall be furnished with continuous self-diagnostic capability to interrogate its function.

SSPLS will be designed for maximum reliability and availability. SSPLS availability for each device channel shall be 99.9955%. In determining device channel availability, a device channel failure is defined as the inability of the SSPLS to initiate equipment actuation signals and associated status indication signals in response to any input command.

A description of the transfer of SSPLS controls is given below.

Each SSPLS cabinet shall be provided with one Master Transfer Switch (MTS) and Individual Transfer Switches (ITS) for each individual equipment to be controlled.

The Master Transfer Switch will permit the transfer of control of all the associated equipment from Control Room to the local control panels and vice versa.

The Individual Transfer Switch will permit the transfer of control of individual equipment from the Control Room to the local control panel and vice versa.

In order to control individual equipment from a remote location, both MTS and ITS must be in the remote position.

Similarly, in order to control individual equipment from a local station, ITS must be in local position.

Irrespective of the type of hardware used (discrete components or microprocessor), the channel information is processed to the end actuator and each piece of the process is testable on a periodic basis to demonstrate integrity. This includes any manual actuation functions supplied by the system to insure compliance with IEEE 279. If microprocessor based circuitry is used, the software used to implement the microprocessor logic will also be testable. The software used will be subjected to verification and validation and will meet the requirements of IEEE 730-1981 (Standards for Software Quality Assurance Plans). The features provided for periodic testing can also be used to operate the equipment manually.

Also, in the unlikely event of a random failure of the SSPLS control circuitry for any device controlled by one SSPLS safety division, the ability to initiate the redundant device in the other SSPLS safety divisions will not be affected.

The CRBRP Plant Data Handling and Display System (PDH&DS) is a non-safety-related microprocessor based system that interfaces with safety-related systems and non-safety-related systems as well for the purpose of retrieving data for operator information. The system provides for information display and data handling, inoperable status monitoring of safety systems and emergency response facility data display. In all cases, Class 1E grade buffers are used for isolation between the PDH&DS and safety-related systems. The PDH&DS is described in PSAR paragraph 7.8.

Question CS421.16

I & E Bulletin 80-06 addressed concerns related to safety equipment not remaining in its emergency mode upon reset. The applicant should specify and justify any places in the design of CRBR safety system logic where safety equipment will not remain in its emergency mode upon reset of an engineered safeguards actuation signal.

Response:

There are no places in the design of the CRBRP safety program logic where, once actuated, safety equipment will not remain in its emergency mode upon automatic or manual reset of an engineered safeguards actuation signal. Equipment can only be returned to its normal condition by manual action (except as noted). Operation of the CIS automatic back pressure valves (explained below) is an exception to this since manual action is not required for these valves to return to their normal position (open). However, these valves will automatically return to their emergency position (closed) when an actuation signal (low pressure) is present. The electrical systems are designed to ensure:

a) Circuit breakers will close on the presence of an emergency signal where driven equipment is powered through medium or low voltage switchgear. The breakers will remain closed even after actuating signal has been reset. Opening of the breakers is achieved through any of the following: manual operation, or electrical fault, or absence of process interlocks which otherwise are necessary for continuous operation of the equipment.

b) Where operated equipment is powered through motor control centers or power distribution panels seal in circuitry is provided for the momentary contacts. The circuit will remain energized even when the actuating signal resets, and can be de-energized only by manual operation, or electrical fault, or by absence of process interlocks which are otherwise necessary for continuous operation of the equipment.

Examples of the system designs follow:

Primary and Secondary Reactor Shutdown System

Once initiated, the Primary and Secondary reactor shutdown systems and the automatic Containment Isolation System (CIS) remain in a tripped condition until manually reset by the operator. These systems do not automatically reset if the actuation signal resets.

Containment Isolation System (CIS)

As part of the CIS design, automatic back pressure valves are used on the argon supply, nitrogen supply and service air supply lines which penetrate containment. These valves are backpressure regulated and close automatically if the supply side pressure drops below the preset limit. The valve actuation point has been chosen to guarantee flow into the containment building if the supply side pressure is above the preset limit. Selection of the actuation

point includes consideration of the maximum accident pressure within containment. In addition, remote manual control switches are available to the operating staff in the control room which allow manual operation of these valves.

Reactor Heat Transport Instrumentation System (RHTIS)

The SGAHRS initiation signals are developed by the PPS system. The PPS system sends two redundant primary and two redundant secondary signals to the RHTIS 1 out of 4 trip logic.

Once a trip signal is sensed by the RHTIS it "latches in" and the PHTIS trip logic will not reset automatically when the primary initiation signal developed by the PPS system resets. All SGAHRS components will continue to perform in the "SGAHRS initiation mode" until the operator manually resets the three SGAHRS initiation trips in the RHTIS. The operator will only reset the SGAHR's initiation circuits when SGAHRs is no longer needed for decay heat removal. After resetting, SGAHR's is automatically restarted should conditions indicate that sufficient decay heat is not being removed - as indicated by low steam drum level. Then, SGAHR's equipment will again automatically maintain the correct drum level.

Aerosol Release Mitigation System (ARMS)

The Aerosol Release Mitigating System (ARMS) sends a signal to the steam generator ventilation system upon detecting aerosols in the steam generator bays. ARMS detector coincidence (2 of 3) circuits sends a signal to the Nuclear Island HVAC System which is used to melt fusible link closing damper valves in the HVAC duct. The fusible link controller cannot be reset without a maintenance effort to replace the link. In addition to the fusible link, the present ARMS detector circuit design does not allow resetting a tripped detector if the alarm condition persists. Design will also include provision for preventing a reset if either an alarm or a fault condition exists. This latter provision accommodates the situation where an alarm condition (sodium leak) results in destruction of the detector.

Question CS421.17

The information supplied for remote shutdown (PSAR Section 7.4.3) from outside the control room is insufficient. Therefore, provide further discussion to describe the capability of achieving hot or cold shutdown from outside the control room. As a minimum, provide the following information:

a) A table listing the controls and display instrumentation required for hot and cold shutdown from outside the control room. Identify the train assignments for the safety-related equipment.

b) Design basis for selection of instrumentation and control equipment on the hot shutdown panel.

c) Location of transfer switches and the remote control station.

d) Description of transfer switches and the remote control station.

e) Description of isolation, separation and transfer/override provisions. This should include the design basis for preventing electrical interaction between the control room and remote shutdown equipment.

f) Description of control room annunciation of remote control or overridden status of devices under local control.

g) Description of compliance with the staff's Remote Shutdown Panel position.

Response:

The response to this question is provided in the amended text for Section 7.4.4.

Question CS421.18

Provide documentation that verifies that control provided for safe shutdown from outside the Control Room will include the capability for reset of any engineered safety features equipment having a high likelihood of being automatically initiated during the normal transient occurring following a manual reactor trip. For example, the Auxiliary Feedwater System may be in this category.

Response:

The Auxiliary Feedwater (AFW) and Protected Air-Cooled Condenser (PACC) are subsystems of the Steam Generator Auxiliary Heat Removal System (SGAHRS). THe AFW Subsystem is not initiated during the normal transient occurring following a manual reactor trip. Howver, all AFW Subsystem component control capability can be transferred from the main control panel to local panels by transfer switches located on the local panels as described in PSAR Sections 7.4.1.1.6 and 7.4.3.1.3. Therefore, the AFW Subsystem can be reset from the local panels when steam venting ceases and decay heat is being removed in a closed-loop mode by the PACCs alone. Throughout the decay heat removal mission, the operator can manually start and stop the AFW Subsystem at the local panels as necessary to maintain steam drum level.

The PACC Subsystem is automatically initiated by all reactor trips, and it remains in operator for the duration of the plant shutdown or as long as the reactor generates significiant decay heat. The PACC has the capability of being reset at the local panels. Then, the operator can manually start and stop the PACC units. Once started the PACC units will automatically control steam drum pressure the same as in the Main Control Room.

Question CS421.19

A number of concerns have been expressed regarding the adequacy of safety systems in mitigation of the kinds of control system failures that could actually occur at nuclear plants, as opposed to those analyzed in PSAR Chapter 15 safety analyses. Although the Chapter 15 analyses are based on conservative assumptions regarding failures of single control systems, systematic reviews have not been reported to demonstrate that multiple control system failures beyond the Chapter 15 analyses could not occur because of single events. Among the types of events that could initiate such multiple failures, the most significant are in our judgement those resulting from failure or malfunction of power supplies or sensors common to two or more control systems.

To provide assurance that the design basis event analyses adequately bound multiple control system failures you are requested to provide the following information:

1) Identify those control systems whose failure or malfunction could seriously impact plant safety.

2) Indicate which, if any, of the control systems identified in (1) receive power from common power sources. The power sources considered should include all power sources whose failure or malfunction could lead to failure or malfunction of more than one control system and should extend to the effects of cascading power losses due to the failure of higher level distribution panels and load centers.

3) Indicate which, if any, of the control systems identified in (1) receive input signals from common sensors, common hydraulic headers, or common impulse lines.

The PSAR should verify that the design criteria for the control systems will be such that simultaneous malfunctions of control systems which could result from failure of a power source, sensor, or sensor impulse line supplying power or signals to more than one control system will be bounded by the analysis of anticipated operational occurrences in Chapter 15 of the Final Safety Analysis Report.

Response:

The design criteria for the Plant Protection System requires that control system malfunctions do not as a consequence compromise the capability of plant protection systems to maintain the plant in a safe condition. Accordingly, the Plant Protection System has been designed to provide continuing protection in the event of control system failures and malfunctions. The Plant Protection System is designed as a safety-related system and includes redundant instrument channels, qualified to safety grade requirements. Where control actions are accomplished by plant control systems, functions important to safety are monitored through the Plant Protection System. Thus, the Plant Protection System through its redundnat sensory channels will sense and respond appropriately to the consequential effects of control system failures or malfunctions. This includes failures or malfunctions within one control

system that directly affect the functioning of other control systems, e.g., loss of a power supply common to several control systems, or shared sensor inputs.

Evaluation of the application of these design criteria applied to CRBRP Plant Protection System and Plant Control System involves analysis of postulated events which could propagate the effects of failures or malfunctions through more than one control system. Events which are considered to cause or result in such propagation are:

1) Loss of a single instrument

2) Break of a single instrument line

3) Loss of power supply for all systems provided from a common power source (e.g., a single inverter supplying several systems).

CRBRP control systems which may affect functions important to safety are:

A) Supervisory Control
B) Reactor Control
C) PHTS and IHTS Sodium Flow Control
D) PHTS and IHTS Pump Speed Control
E) Steam Drum Level Control
F) Turbine Control
G) Bypass Valve Control

Analysis of such events have been conducted for the control systems above. These analyses show that for postulated events considered in 1) thru 3) above the plant is maintained in a safe condition and no conditions result which are worse than those addressed in the PSAR Chapter 15, Accident Analyses.

Control system failures (including malfunctions of shared power sources or common sensors), which cause plant transients requiring reactor shutdown system action, will be terminated by the shutdown system within the CRBR limits for anticipated operational occurrences. This includes the condition of a protection channel in test and any additional single random failure within the reactor shutdown system.

The analyses assume initial conditions to be anywhere within the full operating power range of the plant (i.e., 0 - 100%), where applicable.

The results of the analysis indicate that, for any of the postulated events considered in 1) thru 3) above, the accident analyses in Chapter 15 of the PSAR are bounding.

Loss of Any Single Instrument

Median select circuits are used by most of the control systems itemized above to provide the median (or middle) signal of three sensors as the control feedback signal. For systems using median select circuits the failure of one sensor will not result in loss of control. The analysis in this section, however, goes beyond a sensor failure for these systems and considers a failure in the controller circuitry such that the feedback signal fails high or low. Table QCS421.19-1, Loss of Any Controller Feedback Signal, is an evaluation of the effect on the control systems and the plant caused by loss of the feedback signal either high or low. For control action in the unsafe direction, the bounding PSAR accident is listed. Where no control action occurs or where control action is in a safe direction, no bounding accident is given. This table clearly shows that for the feedback signal failing high or low, events in Chapter 15 of the PSAR are bounding. Control systems that don't use median select circuits are discussed below.

The turbine EHC speed control as well as primary and intermediate pump speed control systems use auctioneering circuits rather than a median select circuit. The circuits are designed such that one sensor failure will not affect control. Two failures are required for loss of the control function. Even though one sensor failure has no effect, this analysis considers failure of the feedback signal high or low. Plant effects and bounding events are given in Table QCS421.19-1.

The turbine EHC flow control and bypass valve position control systems do not use median select circuits but rather single sensors for the feedback signal. For these systems the failure of one sensor will result in a plant disturbance. Plant effects and the bounding event for failure of the feedback signal high or low is provided in Table QCS421.19-1.

The analysis in Table QCS421.19-1 also covers the case of a sensor failure while testing a redundant PPS channel. Control systems that use buffered PPS signals all have median select circuits. For the worst case, the median select circuit would choose one of the failed input signals as the controller feedback. The resulting transient is the same as that in Table QCS41.19-1 where the feedback signal downstream of the median select is assumed to be failed high or low.

Common Sensors Used by Control Systems

There are two cases where common sensors are used by control systems. The Supervisory Control and Bypass Valve Pressure Control systems both use pressure sensors in the main steam header. Each system has its own median select circuit, and the two systems are not in operation at the same time, therefore, failure of a common sensor will not result in loss of control.

The second case involves the Supervisory and Steam Drum Level Control systems. both systems use superheater steam flow sensors and a common median select circuit in each loop. Since median select circuits are used in each loop, the failure of a single sensor will not result in loss of control in either control system. In the event the median select circuit fails low, the NSSS

power is reduced by the supervisory controller and feedwater in the affected loop is reduced by the drum level controller. A reactor scram and SGAHRS initiation results due to low drum level. The bounding event is Loss of Normal Feedwater (PSAR Section 15.3.1.6). In the event the median select fails high, NSSS power is increased but limited to 100% power by a reactor control limiter and feedwater increases until a high drum level condition results in isolation of the main feedwater and a reactor trip. The Chapter 15 bounding event is not applicable for this case.

Break of Any Single Instrument Line

The break of an instrument line common to more than one control system is not applicable to CRBRP. There are only two cases in which sensors are common to more than one control system and the common point is at the transmitter or median select output. These two cases were addressed in the previous section.

Loss of Power to a Protection Separation Group

This section analyzes the effects on the control systems caused by the loss of an inverter powering a protection channel. If the bus to protection channel A, B or C fails low, then the affected PPS channel will trip and the following PPS buffered signals used by the control systems will drop to zero: Channel A, B or C corresponding to the failed bus for reactor flux, primary sodium flow, intermediate sodium flow, steam drum level, superheater steam flow and feedwater flow. Since median select circuits are used to provide the median of the three buffered PPS signals as the controller feedback signal, there will be no loss of control and no effect on the plant. Chapter 15, Accident Analysis, is not applicable.

The following describes the effects in the event power is lost to a redundant protection channel while a PPS channel is under test:

1) If an inverter fails with power lost to the PPS logic, the channel under test is tripped during test satisfying the 2/3 trip logic, and a reactor scram will occur.

2) If a bus fails such that power is lost to a sensor or transmitter but not to the PPS logic, the controller feedback signal in the worst case will be low as a result of two input signals low. (One due to power failure and one due to channel test condition.)

Loss of Power to Control Systems

This section examines the effects on the control systems caused by loss of a bus powering these systems. Most of the control systems are supplied by primary and alternate sources of power and have redundant power supplies in the cabinets. The alternate power source will supply power in the event of a failure of the primary source. Thus, total loss of power requires failure of both power sources and is unlikely. For these control systems, loss of one supply will not result in loss of the control function and the Chapter 15 Accident Analysis, therefore, is not applicable. Control systems that are powered from one source are discussed below.

For the primary rod controller, there is some circuitry that is not powered from redundant supplies. In the event non-Class 1E UPS system A bus fails low, all rod position displays will be lost and rod movement in group or single modes will be inhibited. No plant disturbance results since primary rods are powered from redundant MG sets and remain stationary. Plant operation will proceed in accordance with technical specification limits.

For the primary and intermediate speed control systems, loss of either non-Class 1E 13.8 KV, 480 VAC or 120 VAC buses feeding the pump drive equipment will lead to a pump trip followed by a reactor scram. The bounding event is Spurious Primary Pump Trip (PSAR Section 15.3.1.2).

Besides the loss of power to control systems from the loss of a power distribution bus, there is a chance of having an electrical fault on one of the control system circuit cards. The control systems are designed so that each card is used in only one control system. A circuit card failure cannot directly impact more than one control system. A failure on a control card would cause the controller to generate either an "off" or a "full on" or "as is" or "between off and full on" output, depending on the type of failure. This result would be similar to having the feedback signal fail high or low. Therefore, the failure of or loss of power in any control system circuit card would be bounded by the Loss of Any Controller Feedback signal analysis described in Table QCS421.19-1.

Conclusions

The preceding sections have shown that failures of individual sensors, loss of controller feedback signals, breaks in instrument lines and loss of power to protection channels and control systems all result in events which are bounded by Chapter 15 of the PSAR or result in events with no control or plant impact. Therefore, the PSAR Chapter 15 Accident Analysis adequately bounds the consequences of these fundamental failures.

Table QCS421.19-1

Loss of Any Controller Feedback Signal

Feedback Signal	System	Assumed Failure Direction	Effect	Bounding Event
Reactor Flux	Reactor Control	Lo	Control rods are withdrawn if flux control in auto until high flux or flux-to-flow deviation rod blocks stop rod motion.	Bounding Event is Maloperation of Reactor Plant Controllers (PSAR Section 15.2.2.3).
		Hi	Control rods are inserted if flux control in auto.	Not applicable.
Core Exit Temperature	Reactor Control	Lo	Control rods are withdrawn if core exit temperature control in auto until high flux or flux-to-flox deviation rod blocks stop rod motion.	Bounding event is Maloperation of Reactor Plant Controllers (PSAR Section 15.2.2.3).
		Hi	Control rods are inserted if core exit temperature control in auto.	Not applicable.
Turbine Inlet Temperature	Turbine Inlet Temperature Control	Lo	Control rods are withdrawn if turbine inlet temperature control in auto until high flux or flux-to-flow deviation rod blocks stop rod motion.	Bounding event is Maloperation of Reactor Plant Controllers (PSAR Section 15.2.2.3).
		Hi	Control rods are inserted if turbine inlet temperature control in auto.	Not applicable.
Turbine Inlet Pressure	Turbine Inlet Pressure Control	Lo	Intermediate pump speed in all loops increase if turbine inlet pressure control in auto.	Not applicable.
		Hi	Intermediate pump speed in all loops decreases if turbine inlet pressure control in auto.	Bounding event is Loss of Off-Site Electrical Power (PSAR Section 15.3.1.1).

Table QCS421.19-1

Loss of Any Controller Feedback Signal

Feedback Signal	System	Assumed Failure Direction	Effect	Bounding Event
Superheater Steam Flow	Unit Load Control (Load Programmer)	Lo	Setpoints to all NSSS control systems will decrease to 40% of design.	Not applicable.
		HI	Setpoints to all NSSS control systems will increase to 100% of design.	Bounding event is Maloperation of Reactor Plant Controllers (PSAR Section 15.2.2.3).
Primary Sodium Flow	Primary Sodium Flow Control	Lo	Primary pump speed increases if primary flow control in auto mode.	Not applicable.
		HI	Primary pump speed decreases if primary flow control in auto mode.	If flow controller output change is greater than 10%, pump speed does not change due to speed control mode transfer to manual (open loop). If flow controller output change is less than 10% pump speed decreases over time. Hence, bounding event is Spurious Primary Pump Trip (PSAR Section 15.3.1.2).
Intermediate Sodium Flow	Intermediate Flow Control	Lo	Intermediate pump speed increases if intermediate flow control in auto mode.	Not applicable.
		HI	Intermediate pump speed decreases in affected loop if intermediate flow control in auto mode. Pressure control increases pump speed in other loops.	If flow controller output change is greater than 10%, pump speed does not change due to speed control mode transfer to manual (open loop). If flow controller output change is less than 10% pump speed decreases over time. Hence, bounding event is Loss of Off-Site Electrical Power (PSAR Section 15.3.1.1).

Table QCS421.19-1

Loss of Any Controller Feedback Signal

Feedback Signal	System	Assumed Failure Direction	Effect	Bounding Event
Primary Speed	Primary Speed Control	Lo	Speed control automatically transfers to open loop control. No loop disturbance.	Not applicable.
		Hi	Same as above.	Not applicable.
Intermediate Speed	Intermediate Speed Control	Lo	Speed control automatically transfers to open loop control. No plant disturbance.	Not applicable.
		Hi	Same as above.	Not applicable.
Steam Drum Level	Steam Drum Level Control	Lo(1)	Main feedwater flow increases if steam drum level control is in auto. Increase in feedwater flow results in a high drum level and isolation of feedwater. Reactor trips upon isolation of main feedwater.	Not applicable.
		Hi(2)	Main feedwater flow decreases if steam drum level control in auto. Reactor scram and SGAHRS initiation result due to low drum level.	Bounding event is Loss of Normal Feedwater (PSAR Section 15.3.1.6).
Flow Reference Trim	Turbine EMC Speed Control	Lo	Turbine steam flow decreases as control valves close. NSSS follows steam flow if in supervisory control mode.	Not applicable.

(1) Same effect for feedwater flow feedback falling low or superheater steam flow feedback falling high.

(2) Same effect for feedwater flow feedback falling high or superheater steam flow feedback falling low.

Table QCS421.19-1

Loss of Any Controller Feedback Signal

Feedback Signal	System	Assumed Failure Direction	Effect	Bounding Event
Flow Reference Trim (continued)		Hi	Turbine steam flow increases as all control valves open. NSSS follows steam flow up to 100% power (high flux limiter in reactor control) if in supervisory control mode. At 100% power, mismatch condition results in cooldown of the NSSS followed by a turbine trip on low pressure.	Bounding event is Turbine Trip (PSAR Section 15.3.1.5).
Valve Position	Turbine EMC Flow Control	Lo	Turbine steam flow initially increases as affected control valve opens. Increase in flow is minimized by other 3 control valves closing to compensate. Disturbance on NSSS is small and bounded by normal plant transients.	Not applicable.
		Hi	Turbine steam flow initially decreases as affected control valve closes. Decrease in flow is minimized by the other 3 control valves opening to compensate. At 100% power, flow decrease continues due to limited compensation (valves fully open). NSSS follows steam flow if in supervisory control mode.	Not applicable.
Valve Position	Bypass Valve Control	Lo	Steam flow increases and pressure decreases as affected valve opens. If in load error mode, turbine trips on low pressure. If in pressure mode, other valves close to compensate; possible turbine trip.	Bounding event is Turbine Trip (PSAR Section 15.3.1.5).

Table QCS421.19-1

Loss of Any Controller Feedback Signal

Feedback Signal	System	Assumed Failure Direction	Effect	Bounding Event
Valve Position (continued)		HI	Steam flow decreases and pressure increases as affected valve closes. If in load error mode, NSSS follows steam flow reduction. If in pressure mode, other valves open to compensate; possible turbine trip.	Not applicable.
Pressure	Bypass Valve Control	Lo	Valves close increasing turbine inlet pressure and decreasing steam flow.	Bounding event is Failure of Steam Bypass System (PSAR Section 15.3.2.4).
		HI	Valves open decreasing turbine inlet pressure and increasing steam flow with possible turbine trip on low pressure.	Bounding event is Turbine Trip (PSAR Section 15.3.1.5).

Question CS421.20

As a result of the Loose Parts Monitoring Briefing held on February 24, 1982, the staff requires a formal submittal for the following:

(1) An analysis for all loose objects that can occur in the primary, intermediate, and the steam systems and their effect on safety.

(2) An analysis for the potential effects of crud on safety.

(3) An analysis for a system to detect failures through a noise diagnostic program.

(4) Criteria for a system that will satisfy Regulatory Guide 1.33 (i.e., CRBR needs to develop their own threshold analysis).

(5) The design concepts being considered with a demonstration of feasibility.

Response

The CRBRP Project has developed and is implementing an action plan that will fully evaluate the need for CRBRP Loose Parts Monitoring. The action plan will be conducted in two phases as follows:

- Phase I - Development of the basis for CRBRP Component Degradation Monitoring

- Phase II - Identification of the requirements and implementation needed to support the basis in Phase I.

Phase I of the action plan will establish data needed to assure that the CRBRP that the CRBRP provides a level of safety comparable to LWR's and identify general approaches to obtain the needed data.

Phase II of the action plan will (a) identify the specific monitoring requirements and design changes (if any) needed to support monitoring requirements; (b) establish the operational and limiting criteria for (a); (c) determine the specific methods for implementing (a) and (b); and (d) develop a plan for research, development and test, if needed, to demonstrate the practicability of (c) above.

Phase I of the action plan is scheduled for completion by September 15, 1982 with the Phase II effort scheduled for completion by February 28, 1983. Reports on the outcome of these actions will be available after the above date.

Question CS421.21

"If control systems are exposed in the environment resulting fom the rupture of steam lines or feedwater lines, the control systems may malfunction in a manner which would cause consequences to be more severe than assumed in safety analyses. I&E information Notice 79-22 discusses certain non-safety grade or control equipment, which if subjected to the adverse environment of a high energy line break, could impact the safety analyses and the adequacy of the protection functions performed by the safety grade systems."

"The applicant should confirm in the PSAR that design bases for instrumentation and control systems will include a design criterion that high energy line breaks will not cause control system failures to complicate any event beyond the PSAR analysis."

"The specific 'scenarios' discussed in the above referenced Information Notice are to be considered as examples of the kinds of interactions which might occur. Your control system design should include those scenarios, where applicable, but should not necessarily be limited to them."

Response

CRBRP is committed (PSAR Section 7.1.2.13) to assuring that safety system design features are included which will mitigate any malfunctions of non-safety grade control equipment which occur as a result of high energy line breaks, such that the effects of such malfunctions will not cause control system failures to complicate any event beyond the PSAR analysis.

Question CS421.22

The information supplied in PSAR Section 7.5 concentrates on the information and monitoring systems but does not provide sufficient information to describe safety-related display instrumentation needed for all operating conditions. Therefore, please expand the PSAR to provide as a minimum additional information on the following:

1. ESF Systems Monitoring
2. ESF Support System Monitoring
3. Reactor Protective System Monitoring
4. Rod Position Indication System
5. Plant Process Display Instrumentation
6. Control Boards and Annunciators
7. Bypass and Inoperable Status Indication
8. Control Room Habitability Instrumentation
9. Residual Heat Removal Instrumentation

Response:

This response describes safety-related display information available to the operator in the control room.

Display instrumentation provided for ESFs is described below. Section 7.3 will be revised to include this information. The instrumentation for monitoring ESF support systems are described in the indicated sections of the PSAR: HVAC-7.6.4; Plant Service and Chilled Water Systems-7.6.1; Diesel Generator-8.3.3; Electric Power Systems-8.3.1.1.2, 8.3.1.1.5 and 8.3.2.1.1. The Reactor Protective Monitoring System is described in Section 7.2. Additional information about the display instrumentation has been inserted into Section 7.2 with this response. A description of the display instrumentation provided in the control room for operators for Rod Position Indication is provided in PSAR Section 7.7.1.3.2. Control Boards and Annunciators are detailed in Section 7.9. The Inoperable Status Monitoring System (including bypass monitoring) is discussed in PSAR Section 7.5.12. Section 7.4.1 discusses instrumentation and controls for the SGAHRS which is a part of the overall Shutdown Heat Removal system.

Safety-Related Display Information for ESF Systems

Reactor Containment Building Annulus Filtration System

Monitoring, including indications and alarms, is provided in the control room for the following parameters for each of the redundant trains:

a. Annulus filter fan discharge flow;
b. Annulus pressure maintenance fan discharge radiation;
c. Annulus filter unit inlet radiation;
d. Annulus filter unit relative humidity;
e. Annulus differential pressure (3 monitors for each train); (alarm only);
f. Annulus discharge to atmosphere, radiation (2 monitors for each train);
g. Fan vibration (alarm only);
h. Filter unit leaving air temperature (alarm only);

i. Individual component differential pressure (alarm only);
j. Filter unit differential pressure (alarm only).

Status of the following equipment is provided in the control room for each of the redundant trains:

Annulus Filter Fan
Annulus Pressure Maintenance Fan
Annulus Filter Fan Discharge Damper
Annulus Pressure Maintenance Fan Discharge Damper
Annulus Filter Unit Recirc. Air Damper

RSB Filtration System

Monitoring including indications and alarms is provided in the control room for the following parameters for each of the redundant trains:

a. RSB cleanup filter fan discharge flow and radiation;
b. RSB cleanup filter train leaving air temperature (2 monitors in each train);
c. RSB cleanup filter unit inlet flow;
d. Fan vibration (alarm only);
e. Individual component differential pressure (alarm only);
f. Filter unit differential pressure (alarm only).

Also non-safety-related indications and alarms are provided in the control room for radiation detection in the roof air exhaust discharge.

Status of the following equipment is provided in the control room for each of the redundant trains:

RSB Cleanup Filter Fan
RSB Cleanup Filter Fan Discharge Damper
RSB Cleanup Filter Recirc. Air Supply Damper
RSB Cleanup Filter Recirc. Discharge Damper
RSB Cleanup Filter Normal Exhaust Damper

Control Room Habitability System

Monitoring including indications and alarms is provided in the control room for the following parameters for each of the redundant trains:

a. Main air intake radiation (control room outside air);
b. Remote air intake radiation (control room outside air);
c. Mixed air temperature (2 monitors in each train);
d. Control room A/C unit supply air flow;
e. Control room A/C unit discharge air temperature (2 monitors in each train);
f. Toxic gas in main air intake (alarm only);
g. Toxic gas in remote air intake (alarm only);
h. Smoke in main air intake (alarm only);
i. Smoke in remote air intake (alarm only);
j. Filter unit air flow;
k. Fan vibration (alarm only);

l. Filter unit leaving air temperature (alarm only);
m. Individual filter unit components differential pressure (alarm only);
n. Filter unit differential pressure (alarm only).

Status of the following equipment is provided in the control room for each of the redundant trains:

a. Control Room A/C Unit
b. Control Room A/C Unit Discharge Damper
c. Control Room A/C Unit Inlet Damper
d. Control Room A/C Unit Supply Air Damper (two for each train)
e. Control Room Filter Unit Supply Fan
f. Control Room Filter Unit
g. Control Room Filter Inlet Damper
h. Control Room Filter Unit Supply Fan Discharge Damper

Guard Vessels, Cell Liners and Catch Pans

No instrumentation is required as none is provided for ESF guard vessels (for the reactor and the primary heat transport system), cell liners and catch pans.

Steam Generator Building Aerosol Release Mitigation System Instrumentation and Controls

The Steam Generator Building (SGB) Aerosol Release Mitigation System is designed to control the release of sodium aerosols from the Steam Generator Building in the event of a design basis leak in one of the three IHTS loops. The functional design of this system is discussed in Section 6.2.7. The following instrumentation is provided in the main control room for the SGB Aerosol Release Mitigation System.

Main Control Room Instrumentation for the Steam Generator Building Aerosol Release Mitigation System

a. Aerosol Detector Alarm Indication
b. SGB Loop #1, #2 and #3 Dampers Position Status Indication
c. RCB Supply And Exhaust Fans Common Alarm
d. RSB Dampers and CB Isolation Valves Position Status Indication
e. CB Dampers and CB Isolation Valves Position Status Indication
f. SGB-IB Damper Position Status Indication
g. RSB-RWA Supply and Exhaust Fans and the Exhaust Filter Fan Common Alarm
h. ABHX Intake and Exhaust Dampers Position Status Indication
i. SGB-MB Outside Air Damper Common Alarm
j. DGB Intake Tornado Damper and Outside Air Damper Position Status Indication

Question CS421.23

In the CRBR PSAR Section 7.6, several instrumentation and control systems are listed as being required for safety which have not been included in the following discussion in Section 7.6. It is apparent from our review of this section that these are systems which have been omitted and also, have not been completed. The staff requires additional information to complete out review of Section 7.6.

Response

The information related to instrumentation and control for the following safety related systems is being developed and will be provided in a July 1982 amendment of PSAR Section 7.6.

1. Emergency Plant Service Water System;

2. Emergency Chilled Water System;

3. Recirculation Gas Cooling System;

4. Nuclear Island Heating, Ventilating and Air Conditioning System.

Question CS421.24

In the PSAR Section 7.5.6.14, a limited description of the CRBR Sodium Dump System is presented. Provide a detailed discussion of this system and present a single failure analysis for this system.

Response:

Assuming the PSAR reference is Section 7.5.6.1.4. "Sodium Dump", this section outlines the role of the Instrumentation and Monitoring System in support of the Sodium Dump Subsystem described in PSAR Section 5.5.2.7 (the IHTS portion, drain piping and valves, are discussed in PSAR Section 5.4).

The sodium drain operation following reactor shutdown is at the option of the plant operator and is not required to perform an active safety function.

Section 5.5.2.7 has been revised to reflect a more detailed discussion of the Sodium Dump Subsystem design; however, a single failure can be accepted without jeopardizing the heat transport capability of the remaining two loops because of loop redundancy.

Question CS421.25

With regard to Question 222.63, it appears from Figure 7.2-2E that a failure in a test switch with permissive outputs may prevent tripping of the corresponding primary or intermediate pump. Provide a discussion of such an event.

Response:

It should be noted that Figure 7.2-2E was deleted from the PSAR by Amendment 36 issued in March 1977. Figure 7.2-2 has been corrected to reflect the present features included for on-line testing of the HTS pump breaker trip logic.

The HTS pump breaker logic is tested by using a test breaker to bypass one of the two breakers which are in series with each HTS pump motor. Two test breaker mechanisms are provided for the plant. These test breakers are mechanically configures to assure that both series HTS pump breakers in a loop cannot be bypassed at the same time.

Breakers for the same primary and intermediate HTS loop are tested at the same time. To prevent a spurious HTS pump trip during test, permissive contacts are used to make the HTS breaker test switches inactive until the actuating the lost switch will initiate a trip signal from the pump trip logic to the pump breakers. Failure of the permissive contacts to function when the HTS test breaker is installed will not allow operation of the test switch. This type of failure will not prevent propagation of an HTS pump trip signal from the reactor shutdown system. If the permissive contacts spuriously actuate when an HTS test breaker is not installed, nothing will happen unless the operator manually actuates the test switch. Again, this type of failure will not prevent propagation of an HTS pump trip signal from the reactor shutdown system.

Refer to Section 7.2.1.1 (Page 7.2-2a) of the PSAR for a description of the HTS pump trip provisions.

Question CS421.26

In the PSAR, Section 7.4.1.1.2 discusses the Protected Air-Cooled Condenser (PACC) and how air flow through it is controlled by a combination of fan blade pitch and inlet louver position. The staff requires a detailed discussion of this instrumentation and in particular the method used for fan blade pitch indications.

Response:

The outlet louvers have discrete open and closed position sensors. These provide indication at both the local control panel and main control panel in the control room.

The inlet louvers have both discrete open and closed position sensors and a continuous position sensor. The continuous position sensor provides feedback to the louver control. Both types provide indication at the local control panel and at the main control panel in the control room.

The fan blade pitch is sensed by continuous position sensors for both control and indication. The indication is provided at the local control panel and at the main control panel in the control room.

Both the discrete and continuous sensors are integral to the actuator. The discrete sensors are roller switches activated by a cam and the continuous is a potentiometer.

This instrumentation discussed above is Class 1E with the exception of the indicating lights.

All instrumentation and controls necessary for the PACCs to carry out their intended safety function is safety-related.

Question CS421.27

In the PSAR Section 7.3, the statement is made that the initiation of containment isolation is the only Engineered Safety Feature (ESF) identified which requires a description in this Section. Chapter 6 of the PSAR denotes several systems (Annulus Filtration System, Reactor Service Building Filtration System, and the Residual Heat Removal System including SGAHRS and OHRS) in addition to the Containment Isolation System as being part of the ESF System. Justify why these systems aren't included in Section 7.3 of the PSAR. Also, the staff believes that the Sodium-Water Reactor Pressure Relief System (SWRPS) should be classified as part of the ESF System. Describe the actions to be automatically initiated or to be initiated by operators to mitigate sodium-water reactions. The discussions should include actions necessary to protect public safety or avoid an unanalyzed plant upset.

Response:

Section 7.3 as modified by Amendment 71 provides a cross-reference to PSAR Section 6.1 which identifies Engineered Safety Features (ESFs) and the sections of the PSAR where they are discussed. Additional information is provided in the response to NRC Question CS421.22.

The Sodium/Water Reactor Pressure Relief System's (SWRPRS) safety function is accomplished by the mechanical actuation of the rupture discs by pressure generated from a sodium/water reaction occurring in a steam generator module (ref. PSAR Sections 5.5.2.4 and 5.5.2.6).

Subsequently, the SWRPRS instrumentation and control has two functions. These two electrical functions have different safety consequences, and therefore, one is classified as safety-related, and the other as non-safety-related.

1) Safety-related instrument and control function: Actuation of the SWRPRS is detected immediately downstream of the rupture discs (ref. PSAR Section 5.5.2.4). A safety-related (Class 1E) signal resulting from the sensors, is transmitted to the PPS (ref. PSAR Section 7.2.1.2.2). This initiates a reactor trip and is part of the Plant Protection System. As stated in Section 7.5.6.2 this complies with requirements stated in Section 7.1.2 and 7.2.2.

2) Non-safety-related instrument and control functions: A buffered signal initiates actions as described in Section 7.5.6.1.2. Since these actions only isolate the loop affected, the ability of any other loop to remove decay heat from the reactor is not compromised. Therefore, these functions are not considered safety-related.

For automatic and operator actions in case of sodium/water reactions, see Sections 5.5.2.8, 7.5.5.3, and 7.5.6.

Question CS421.28

Section 7.5.6.2 of the PSAR dealing with the Sodium-Water Reactor Pressure Relief System (SWRPRS) states: "SWRPRS equipment whose failure could cause loss of decay heat removal capability to the SGAHRS is safety related. Any credible single failure in the SWRPRS can lead to the failure of at most one of the three decay heat removal loops. Since thre three decay heat removal loops are redundant and independent, the SGAHRS will meet the single failure criterion and the adequacy of the decay heat removal system following a credible single failure in the SWRPRS is assured." Provide details explaining the inter-relationships of the SWRPRS and the SGAHRS.

Response:

The SGAHRS (Steam Generator Auxiliary Heat Removal System) is connected to the water side of the Steam Generator System (SGS) as shown in PSAR Figure 5.1-5. SGAHRS is designed to remove decay heat that has been transported to the SGS, as discussed in PSAR Section 5.6.

The SWRPRS is connected to the intermediate heat transport sodium piping, as shown in PSAR Figure 5.1-4. Its function is to relieve pressure in the IHTS generated by a large sodium water reaction in an evaporator or superheater (See PSAR Section 5.5.2.6).

The interrelationship of the SWRPRS and the SGAHRS is as follows; if a SWRPRS trip occurs during SGAHRS operation, the SGAHRS safety related auxiliary feedwater isolation valves in the affected loop are automatically closed. This is accomplished by a SWRPRS activation of the SGAHRS auxiliary feedwater isolation valves (see PSAR Section 7.5.6.1.2 and figure 7.5-6 for SWRPRS trip logic details). Decay heat removal is provided by the redundant heat transport loops, unaffected by SWRPRS trip logic details). Decay heat removal is provided by the redundant heat transport loops, unaffected by SWRPRS trip in the affected loop.

Question CS421.29

Discuss in further detail the measurement system used for detecting a sodium/water reaction (PSAR Section 7.5.5.3.1) and how this system meets IEEE-279. Do the hydrogen detectors cause loop isolation at their setpoints?

Response:

The steam generator leak detection system is provided to give early indication of small water/steam-to-sodium leaks, thereby allowing the operator to take corrective action to reduce the system pressure before significant steam generator damage and rupture disc actuation occur.

The leak detection system detects the presence of very small water-to-sodium leaks by continuously monitoring the hydrogen and oxygen concentrations in the sodium stream. The operator response to elevated concentrations is discussed in PSAR Section 7.5.5.3.2.

The leak detection system serves only to decrease component damage and plant down time in the event of a small sodium/water reaction. No automatic corrective action is initiated by signals from the oxygen and hydrogen meters; therefore, the leak detection system is not a part of the CRBRP Plant Protection System and is not subject to the requirements of IEEE-279, "Criteris for Protection Systems for Nuclear Power Generating Stations." Overpressure protection for the intermediate heat transport system (IHTS) is provided by the sodium/water reaction pressure relief system (SWRPRS) rupture discs located at the superheater inlet, at the evaporator outlets, and on the cover gas equalization line between the IHTS expansion tank and the sodium dump tank. The SWRPRS is discussed in PSAR Sections 5.5.2.6 and 7.5.6.1.

Question CS421.30

To extend our review, the staff (ICSB & EC&G) each require a set of one line I&C Drawings for the safety related CRBR systems. Drawings should also be provided that indicate the separation used in the CRBR design.

Response:

The NRC Staff in a telecon with the Project on 9/13/82, confirmed that the requested information is currently in their possession.

Question 421.31

Address the adequacy of the Reactor Vessel Level gauges with emphasis on the lack of diversity, the level range chosen, the method selected, and the effects of temperature on the level accuracy. Provide this same discussion for the level probes in the sodium expansion tank, the sodium dump tank, and the sodium pump tank. Also, discuss provisions made for sodium level measurements in the intermediate system.

Response:

Mutual inductance type sodium level probes are used for all continuous sodium level measurements in the reactor vessel, sodium expansion tank, sodium dump tank and the sodium pump tank. This type of level probe has been shown to be superior to other types of level probes during sodium testing of various types of level probes. Other types of level probes which were evaluated in this test program include balanced bridge type inductive level probes, displacer-float type level transducers, delta P type level transducers and time domain reflectometry transducers. The advantage of using highly reliable mutual inductance type probes outweighs any advantage that could be obtained from type diversity.

The mutual inductance level probe has a primary and secondary inductance coil. Excitation is applied to the primary coil which develops a signal in the secondary coil. The signal magnitude in the secondary coil is dependent upon the height of the sodium.

To compensate for sodium temperature changes a temperature compensation circuit is integral with the signal condition equipment and works on the concept of resistance changing with temperature. The compensation circuit measures the voltage and current in the primary coil and evaluates changes to determine the resistance change and automatically adjusts the output of the signal conditioner based on the resistance change.

The reactor vessel contains four narrow range probes, three of which are used by the Primary Reactor Shutdown System, and two wide range probes which are designated to the part of the Accident Monitoring (AM) System. The measurement range chosen for the narrow range probes (30 inches) is based on a range which is wide enough to cover the normal operating ranges of the sodium level in the reactor vessel but is narrow enough that the uncertainty associated with the measurement is minimized.

The measurement range chosen for the wide range probes (189 inches) is based on the ability to monitor the sodium level down to the level of the reactor vessel outlet nozzles.

Each Primary pump contains two redundant wide range probes (80.5 inches) to monitor sodium level over the full elevation of the pump tank.

Sodium level measurement is accomplished in the intermediate system via the sodium pump and expansion tank, the intermediate sodium pumps have a single wide range probe (86.9 inches) installed in the pump tank which monitors the full range of the sodium level in the pump tank. Two level probes are installed in the sodium expansion tank, a wide range probe to measure the full range of anticipated steady state and transient sodium levels in the tank and a narrow range probe for accuracy during fill of the system. The wide range level probe in the expansion tank also provides a signal for a high and low level alarm. The pump tank level probe provides a signal for a high and low level alarm, and isolation of IHTS argon cover gas system.

Two wide range level probes are installed in each sodium dump tank. These probes are arranged with overlap to provide for monitoring sodium levels during sodium fill and drain operations of the Intermediate Heat Transport System.

Question CS421.32

Upon reviewing the PSAR Section 7.7.1.10, it is apparent that the Sodium Fire Protection System is proposed as a non-safety system. Justify this classification.

Response:

In inerted cells, piping and equipment of the Primary Heat Transport System and the Ex-vessel Storage Tank System containing radioactive sodium are located in cells with Engineered Safety Feature (ESF) steel liners (Section 6.4). Sodium fires are surpressed in these inerted cells due to the low oxygen content (2%) within the cell atmosphere and the high integrity liner preventing contact with structural concrete.

In air-filled cells, the Sodium Fire Protection System (SFPS) (PSAR Section 9.13.2) provides Engineered Safety Features (ESFs) and non-safety related features to accommodate the effects of a sodium fire. The Catch Pan System (Section 6.5) and the Aerosol Release Mitigation System (Section 6.2.7) provide the ESF protection. Associated with the ESF Aerosol Release Mitigation system are safety-related instrumentation of the Aerosol Release Limiting Instrumentation (Section 9.13.2) and the Heating, Ventilating, and Air Conditioning System (Section 9.6). Other non-safety related instrumentation (Section 9.13.2.2.3) is also provided for the SFPS which is not required to protect the health and safety of the public.

PSAR Section 7.7.1.10 has been revised in response to this question. PSAR Section 7.3 discusses instrumentation associated with Engineered Safety Features.

Question CS421.33

Does the safety-related instrumentation in contact with a sodium or sodium potassium (PSAR Section 7.5.2.1.1) environment meet IEEE-279, Section 4.5? Include a discussion of freeze protection for this environment.

Response:

The pressure-sensing instrumentation in PSAR Section 7.5.2.1.1 meets the criteria of IEEE-279, Section 4.5. These instruments are close coupled to the large diameter piping so the Na/NaK bellows interface is less than 10 inches from the piping. The instrument is inside the piping insulation and the temperature at the Na/NaK interface is less than 20°F below that of the piping, therefore, no freeze protection is required. (The piping is always maintained at a temperature 150° above the freezing point of sodium, except when maintenance is being performed.) These instruments are mounted to drain automatically if the piping is drained.

All other instrumentation is protected from the sodium environment by wells or thimbles.

Question CS421.34

PSAR Section 7.5.2.1.2 states in part that a signal is provided to the control room indicating that the pony motor is running. The staff requires more information with regard to the CRBR pony motor instrumentation and control system. In particular, the initiation signals for the pony motors, manual initiation capability, qualifications for the system, and the design criteria for the system should be discussed. PSAR Section 7.5.6.1.1 states in part that the sodium pony motor is tripped upon a large leak detection. Discuss the safety aspects of this trip and provide the staff information on other signals that will trip the pony motors.

Response:

The pony motor runs continuously during all modes of plant operation except during sodium pump or drive system maintenance. Therefore, there is no need for automatic or manual initiation signals except for the start-stop switch.

Normal pony motor start is through a permissive sequence circuit which starts the external lubricating oil cooling system and high pressure lube oil pump, and when the oil system achieved flow and pressure the pony motor starts. Once started the loss of flow or pressure will not result in a pony motor trip. This method of starting is not classified as safety-related.

In the safety-related mode, pony motor operation does not require the use of the external lubricating oil cooling system or high pressure lube oil pump. This function is carried out by a start-stop switch on the main control panel in the control room.

The non-safety permissive sequence starting circuit is isolated from the safety circuit and will not prevent the operation of the safety function. The safety circuit will be qualified per WARD-D-0165 (Ref. 13 of PSAR Section 1.6).

There is available in the control room, pony motor speed and current indications. Pony motor current indication is provided via the PDH&DS. These circuits are non-safety related.

The only condition which results in an automatic IHTS pony motor trip (the PHTS pony motor is not tripped) is a large sodium/water reaction which results in a rupture disc rupturing. The safety aspects of this trip are specifically addressed in the response to Question CS421.27.

Question CS421.35

Provide a more detailed discussion (PSAR Section 7.5.4.1.1) on the argon cover gas monitoring system and indicate the design criteria for this system. Also, Section 7.5.4.1.1 indicates that a minicomputer will be used for cover gas analyses. Discuss the use of this minicomputer and how its failure relates to system operation.

Response:

The response to this question is provided in revised PSAR Section 7.5.4.1.1.

Question CS421.36

Provide a more detailed discussion of the CRBR Leak Detection system and how it meets the provisions contained in the Light Water Reactor Regulatory Guide 1.45. The discussion should include detection methods, detector sensitivity, detector response time, signal correlations and calibration, seismic qualification, testability, and the provisions for technical specifications.

Response:

PSAR Section 7.5.5.1.1 has been revised to provide a more detailed discussion of the CRBRP Leak Detection Instrumentation System. A comparison to the provisions of Regulatory Guide 1.45 is contained in Section 5.3 of WARD-D-185, "Integrity of the Primary and Intermediate Heat Transport System Piping in Containment", (Reference 2 of PSAR, Section 1.6).

Technical Specifications will be developed at the FSAR stage. The Technical Specification will require that the plant will be placed in either the hot shutdown or refueling condition if there is a confirmed leak in either the primary or intermediate heat transport system.

Question CS421.37

Discuss the provisions made for alarming a zero or negative differential pressure (PSAR Section 7.5.5.2.1) as to sensor type, location, setpoints, testability, and annunciation.

Response

The intermediate loop pressure to primary loop pressure is maintained at presssures greater than 10 psi. When the pressure on the intermediate loop drops to within 10 psi of the primary loop, the operator is alerted by an alarm. The alarm is on a positive pressure differential and not zero or negative pressure differential.

Each instrument channel includes provisions for insertion of a test signal on the sensor side of the signal conditioning electronics.

The sensor type, locations, setpoints and annunciation are described in PSAR Section 7.5.2.1.1. PSAR Pages 7.5-7, 7.5-8, 7.5-27 have been modified for clarification.

Question CS421.38

Section 7.4.2.1.4 of the PSAR states: "Control interlocks and operator overrides associated with the operation of the superheater outlet isolation valves have not been completely defined." Have these interlocks and overrides now been defined?

Response

The need for control interlocks and operator overrides is currently being reviewed and a Project position will be reflected in the PSAR in November, 1982.

Question CS421.39

Section 7.5.4 of the PSAR deals with the Fuel Failure Monitoring (FFM) System. There are no requirements or criteria delineated in the PSAR for this system. Discuss the design criteria for this system.

Response:

The response to this question is provided in revised PSAR Section 7.5.4.

Question CS421.40

Section 7.6.4.2 of the PSAR states: "Instrumentation and control are provided to comply with CRBR General Design Criterion 13, Section 3.1.3". A review of the CRBR Program Office Preliminary Design Criteria of 1976 and those revised in 1981 do not have a Section 3.1.3 to Criterion 13. Is there a different set of criteria being used?

Response:

a different set of criteria is not being used, the reference to Section 3.1.3 is PSAR Section 3.1.3, "Conformance with CRBRP General Design Criteria". It should be noted that PSAR Table 3.1.4 gives a cross-reference from old criteria number to new criteria number. The new criterion number is 11. PSAR Section 7.6.4.2 is being revised to change the criterion number from 13 to 11.

Question CS421.41

Section 7.7.1 of the PSAR deals with the Plant Control System. The section states in part: "The automatic control includes two modes: a reactor follow mode in which the plant is operated based on a reactor power level established by the plant operators; and load follow mode in which the plant responds to the load demand from the operator or the utility Automatic Load Dispatch System. The automatic control system maintains the temperatures, flows, and pressures according to a specified plant load profile shown in Figure 5.7-1 and 5.7-2." In the second mode, the plant responds to the load demand from the operator or the utility Automatic Load Dispatch System. This system is not identified as part of the Plant Control System and cannot be identified as being located in the reactor control room. Therefore, does the dispatcher have control of the Automatic Load Dispatch System? If so, disucss the means to defeat the automatic load dispatch system if it is concluded at the time of the operating license review that automatic load dispatching is not permitted.

Response:

The Supervisory Control System is described in PSAR Section 7.7.1.1 and Figure 7.7-2. Plant loading/unloading is performed by changing the turbine load (Turbine Electrohydraulic Control commanded by Unit Load Control) with the NSSS following (plant controllers commanded by Load Programmer). The Unit Load Control can be operated in either a Local Operator mode where the operator inputs desired load and rate signals from the Main Control Panel (MCP) or a Remote Dispatch mode where the dispatcher (TVA Power System control Center in Chattanooga, TN) via micorwave inputs the loading/unloading rate signal in the form of electrical pulses. The operator selects the mode from the MCP and sets rate and unit load limits which are in effect for both modes. The dispatcher rate signal is supplied to the Unit Load Control by a Data Acquisition and Control Terminal (DACT).

The Supervisory Control and DACT panels are located in the Control Room. If it is concluded at the time of the operating license review that the Remote Dispatcher mode is not permitted, this mode can be defeated by simply removing the field wiring between the Supervisory Control panel and DACT for the dispatcher rate signal. The operator would then control plant loading/unloading in the Local Operator mode. The DACT would be retained since power generation related data is transmitted to the Power System Control Center (PSCC) via this equipment.

Question 421.42

Section 7.1.2 and 7.2.2 of Chapter 7 of the PSAR reference the use of IEEE standards. Other sections in Chapter 7 make reference to Section 7.1.2 but do not identify specific IEEE standards which were implemented in the system design. Justify why Section 7.3 through 7.7 of the PSAR do not provide enought information to determine whether the IEEE standards are implemented in the design.

Response:

Chapter 7 has been revised to add specific identification of IEEE standards when appropriate as described below. Compliance with IEEE standards for non-safety related systems is not required and therefore use of IEEE standards for those systems is not discussed.

Section 7.2 - This section is amended to clarify the use of IEEE standards.

Section 7.3 - This section is amended to clarify the use of IEEE standards.

Section 7.4 - This section is amended to clarify the use of IEEE standards.

Section 7.5.1 - The Wide Range and Power Range Flux Monitors discussed in this section are safety related, the IEEE standards of Table 7.1-3 are applied to the designs.

Section 7.5.2 - Addresses the types of functions and the sensors used in the plant and does not specifically identify these instruments as safety related or not. Table 7.5-1 identifies the variables which are safety related as does Section 7.2. Paragraph 7.5.2.2 states that the instruments which are a part of the Protection system comply with the requirements of Section 7.1.2 and 7.2.2 which encompasses the IEEE standards listed in Table 7.1-3.

Section 7.5.3 - The sodium level probes discussed in this section are 1E. The remaining instrumentation is non-1E. Section 7.5.3.2 states that the sodium level probes are part of the Reactor Shutdown system and will comply with PPS Design Requirements (Sections 7.1.2 and 7.2.2). The probes, therefore, will comply with IEEE standards identified in these sections as applicable to PPS.

Section 7.5.4 - The Failed Fuel System is not safety related.

Section 7.5.5 - The leak detection systems discussed in this section are not safety related.

Section 7.5.6 - SWRPRS instrumentation and control has two functions. One is to initiate a reactor trip, the other is to isolate the affected loop. The reactor trip function is part of the Plant Protection system and as stated in 7.5.6.2 complies with Sections 7.1.2 and 7.2.2. Isolation of the affected loop is not safety related since it does not compromise the ability to remove decay heat from the unaffected loops.

Sections 7.5.7, 7.5.8 and 7.5.9 - The instruments discussed in these sections are safety related, the IEEE standards of Table 7.1-3 are applied to the designs.

Sections 7.6.1, 7.6.2, 7.6.4 and 7.6.6 - These Sections have been revised to incorporate applicable IEEE Standards.

Section 7.6.5 - The SGB Flooding Protection System is safety related and section 7.6.5 is amended to clarify the use of IEEE standards.

Sections 7.7 and 7.8 - No IEEE standards are applied in these sections since the systems described therein are non safety related systems.

Section 7.9 - This section has been amended to clarify the use of IEEE standards.

Question 421.43

Section 7.7.1.3.2 of the PSAR deals with the Rod Position Indication System. Discuss the design criteria for this system.

Response:

The basic criteria for the Rod Position Indication System are 1) to provide redundant indication of primary control rod position over the full range of possible rod movement and 2) provide position information necessary to insure that maximum control rod misalignments are limited to a value less than ±1.5 inches.

To meet the first criterion two diverse and independent measuring systems are provided. Each system is capable of measuring the position of the primary rods throughout their range of motion. The Absolute Rod Position Indication System (ARPI) determines the position of the control rod absorber through the position of the mechanism lead screw relative to the control rod drive mechanism. As the ARPI provides a direct measurement of rod position, it does not lose its reference after a scram or temporary loss of power.

The Relative Rod Position Indication system (RRPI) determines the position of the control rod absorber by monitoring the rotation of the roller nut which operates the lead screw. Because the roller nut opens to allow the lead screw to drop during a scram, the RRPI loses its reference and must be rezeroed after such an event.

To insure that the second design criterion is met, it is necessary to provide system accuracy such that event when readout, accuracy and position uncertainty associated with the position of the absorber assembly relative to the reactor core are considered, rod misalignments are limited to a value less than 1.5 inches. The accuracy of the RRPI and ARPI, each being better than ±0.3 inches, insures that the second criterion is met.

Question CS421.44

Seismic Instrumentation is provided for the CRBR. For earthquake events, this instrumentation would be vital to the reactor operator. This instrumentation is not included in the systems described in Chapter 7 of the PSAR. Provide the design criteria for the seismic instrumentation.

Response:

Detailed information on seismic instrumentation and the attendant design criteria are provided in PSAR Section 3.7.4 and Appendix 3.7-A (Section 10).

Question CS421.45

Describe features of the CRBRP environmental control system which insure that instrumentation sensing and sampling lines for systems important to safety are protected from freezing during extremely cold weather. Discuss the use of environmental monitoring and alarm systems to prevent loss of, or damage to, systems important to safety upon failure of the environmental control system. Discuss electrical independence of the environmental control system circuits, and the monitoring/alarm circuits.

Response

All safety related process, instrument and sampling lines are contained entirely within environmentally controlled buildings. There are no safety related instrumentation sensing or sampling lines located external to the building or near building access openings from the external environment, such as doors and equipment hatches, which could freeze as a result of exposure to cold weather.

The Nuclear Island Heating, Ventilating and Air Conditioning (NI HVAC) System will maintain a miminum temperature of 55°F in all areas of the NI buildings which contain safety-related equipment. All HVAC units utilizing outside air for ventilation will alarm when the temperature of the air, measured upstream of the cooling coil, is below a fixed set point. Electrical independence of the NI HVAC System is described in Chapters 7.1 and 7.6 of the PSAR.

Question CS421.46

As called for in Section 7.1 of the Standard Review Plan, provide information as to how your design conforms with the following TMI Action Plan Items as described in NUREG-0737:

a) II.D.3 - Relief and safety valve position indication

b) II.E.4.2 - Containment isolation dependability (positions 4, 5 and 7)

c) II.K.3 - Final recommendations

.9 - PID controller

.12 - Anticipatory reactor trip

It has been the case for light water reactors to provide an anticipatory reactor trip following a turbine trip directly from the turbine bypass and/or control valves. In the PSAR, Table 7.2-2 indicates that a turbine trip will cause a reactor trip upon a steam feedwater flow mismatch and/or steam drum level indication. Justify the lack of an anticipatory reactor trip initiated from turbine bypass or control valve closure.

Response:

a) II.D.3 Direct Indication of Relief and Safety Valve Position

Position

"Reactor coolant system relief and safety valves shall be provided with a positive indication in the control room derived from a reliable valve position detection device or a reliable indication of flow in the discharge pipe."

CRBRP Design:

As stated in Appendix H of the PSAR, which addresses TMI position II.D.3, the CRBRP, unlike pressurized water reactors, has an unpressurized reactor coolant system and has no relief and safety valves in the reactor coolant loop. Thus, the potential for loss of coolant to the reactor through safety relief valves such as occurred at TMI does not exist on the CRBRP plant. TMI II.D.3 deals with the inability to cool the reactor as a result of loss of coolant to the reactor through the safety relief valves. Therefore, neither the requirement nor the principle of the requirement have any application on CRBRP.

Safety relief valves and vent control valves are utilized in the steam side of the heat transport system for overpressure protection and venting for SWRPRS and SGAHRS operation. A failure to close when expected or leakage from one of these valves could result in loss of water inventory from that particular steam generation loop, which could lead to the loss of the heat removal capability of that loop. Should the leak be sufficient to prevent the affected loop from removing decay heat, there are two remaining loops which are capable of performing the required safety function of decay heat removal.

The SGS safety valves are pilot operated valves which will open when system pressure reaches their set points. In addition, the evaporator outlet and superheater outlet safety valves will open when actuated by an air-operated actuator. Main control room indication of pilot stem position, not main valve stem position, is provided for these valves. To provide a backup to the pilot stem position indicators, an acoustic sensor has been added to the vent piping downstream of each SGS safety valve. These sensors will detect either a stuck open valve or any steam leakage past the seat of a closed valve. These conditions will be alarmed and annunciated in the main control room.

The SGAHRS steam drum and superheater vent control valves have electric/hydraulic operators and are provided with Class 1E direct stem position indicators in the main control room. Acoustic sensors located on the vent piping downstream of the valves will detect any steam leakage past the seat of a closed valve, and the leakage will be alarmed and annunciated in the main control room.

In addition to the above mentioned valve position indication, the loss of water inventory at a rate sufficient to be of a safety concern can be detected and the loop isolated by class 1E instrumentation. These are, steam drum pressure, steam drum level and main feedwater flow or SGAHRS AFW flow.

b) Item II.E.4.2 Containment Isolation System Dependability

Position (4)

"The design of control systems for automatic containment isolation valves shall be such that resetting the isolation signal will not result in the automatic reopening of containment isolation valves. Reopening of containment isolation valves shall require deliberate operator action."

Clarification

"(4) Administrative provisions to close all isolation valves manually before resetting the isolation signals is not an acceptable method of meeting position 4.

(5) Ganged reopening of containment isolation valves is not acceptable. Reopening of isolation valves must be performed on a valve-by-valve basis, or on a line-by-line basis, provided that electrical independence and other single-failure criteria continue to be satisfied."

CRBRP Design:

CIS valve closure is controlled by initiating an isolation signal to the CIS breaker undervoltage coil. Reset of the isolation signal to the CIS breaker undervoltage coil will not automatically reset the CIS valves. Reset of the CIS valves requires the operator to manually close the CIS breaker. Individual valve control switches are provided, which will allow the operator to manually select all valves closed prior to closing the CIS breaker. This will allow each CIS valve to be individually opened under administrative control. This meets the intent of Position 4 and Clarifications 4 and 5.

Position (5)

"The containment setpoint pressure that initiates containment isolation for nonessential penetrations must be reduced to the minimum compatible with normal operating conditions."

CRBRP Design:

Containment pressure is not used to initiate automatic containment isolation. The CIS back pressure valve setpoints are chosen to assure that, upon system failure, the containment isolation valves remain closed for the highest containment pressure.

Position (7)

"Containment purge and vent isolation valves must close on a high radiation signal."

CRBRP Design:

CRBRP purge and vent lines will isolate on a high radiation signal. There are no sealed-closed purge isolation valves.

c) II.K.3 Final Recommendations

.9 Proportional Integral Derivative Controller Modification

Position

"The Westinghouse-recommended modification to the proportional integral derivative (PID) controller should be implemented by affected licensees."

CRBRP Design:

This TMI action plan requirement was provided to preclude the spurious opening of pressurizer power operated relief valves (PORVs) in Westinghouse-designed PWRs. There are no PORVs on the CRBRP reactor coolant boundary; therefore, this action plan requirement is not applicable to CRBRP.

.12 Anticipatory Trip

"Position

Licensees with Westinghouse-designed operating plants should confirm that their plants have an anticipatory reactor trip upon turbine trip. The licensee of any plant where this trip is not present should provide a conceptual design and evaluation for the installation of this trip."

CRBRP Design:

An anticipatory trip upon turbine trip is not required because the Intermediate Heat Transport System acts as a buffer between the reactor and the Steam Generator System (SGS). This arrangement loosely couples the reactor and SGS such that events in the SGS (such as turbine trip) are not immediately reflected as changes in reactor parameters. Response time of the Steam to Feedwater Mismatch is more than adequate to scram the reactor upon a turbine trip making the anticipatory trip from the bypass/control valves unnecessary.

Question CS421.47

Discuss the design bases for the ventilation systems used for engineered safety feature areas including areas containing systems required for safe shutdown. The discussion should cover redundancy, testability, etc.

Response:

The design bases for the ventilation systems used for engineered safety feature areas are discussed in the PSAR and located in the following sections:

(1) Sections 6.3.1 and 9.6.1.1 for the Control Building Control Room Habitability System.

(2) Sections 6.2.5 and 9.6.2.1 for the Reactor Containment Building Annulus Filtration System.

(3) Sections 6.2.6 and 9.6.3.1 for the Reactor Service Building Filtration System.

(4) Section 6.2.7 for the Steam Generator Building Aerosol Release Mitigation System.

(5) Section 9.6.5 for the Diesel Generator Building.

Question CS421.48

Using system schematics, describe the sequence for periodic testing of the:

a) outlet steam isolation valves

b) main feedwater control valves

c) main feedwater isolation valves

d) auxiliary feedwater system

e) pressure relief valves at superheater

The discussion should include features used to insure the availability of the safety function during test and measures taken to insure that equipment cannot be left in a bypassed condition after test completion.

Response:

Periodic testing of these components/system will be accomplished as follows:

a) Outlet Steam Isolation Valves (Refer to PSAR Figure 5.5-2B for a schematic of the electro/hydraulic actuator).

The test mode of the steam and feedwater isolation gate valves, which are opened hydraulically and closed pneumatically, is as follows:

- A test mode switch must be activated and held in this position by the operator. This action simultaneously overrides the pressure switch (PS1) normally maintaining full hydraulic pressure to hold the valve open and de-energizes the pneumatic (SV3) and hydraulic (SV2) solenoid-operated pilot valves, causing the valve to begin to close pneumatically.

- The valve closes until the 10%-closed limit switch is activated. This activation re-energizes the pneumatic (SV3) and hydraulic (SV2) pilot valves which blocks hydraulic flow in the valve actuator and stops the valve stroke.

- After the operator verifies the valve has stroked to 10% closed, he releases the test mode switch. Upon release of this switch the pressure switch (PS1) controlling hydraulic pressure in the actuator is re-energized and functions to cycle the valve open hydraulically.

- The operator verifies the valve has returned to full open position, thus completing the verification of valve operability.

The limiting of the valve stroke to approximately 10% closed will permit normal plant operation during valve testing. All safety functions will remain operable, since trip signals will override the valve test mode switch.

Section 5.5.2.3.1 and Figure 5.5-2A have been revised to incorporate a functional description of the electro/hydraulic actuator employed. Figure 5.5-2B has been added to provide a schematic for this actuator.

b) Main feedwater control valves.

These valves operate at a mid-stroke position which depends on power level and will move whenever power level is changed or whenever there is a system disturbance. Therefore, no additional testing is required to demonstrate valve operability.

c) Main feedwater isolation valves.

These valves will be tested in the same manner as the outlet steam isolation valves.

d) Auxiliary feedwater system.

The following describes the method of periodically testing the SGAHRS system.

This test will be performed once every three months to demonstrate the operability of the SGAHRS Auxiliary Feedwater Subsystem. It will be performed during normal plant operation and under conditions that are as close to design as practical and provides for initiation of the complete sequence that brings the AFW Subsystem into operation for a reactor shutdown following a postulated accident. To ensure the availability of the safety function during the test, the logic design provides for the Plant Protection System initiation signal override of the SGAHRS AFW test switch signal.

The initial conditions for the startup of the SGAHRS for the quarterly test require the plant to be operating at or above 40% power with the SGAHRS filled, the Plant Protection System in operation and SGAHRS initiation logic in the reset mode. The SGAHRS instrumentation is operable, the controls are in the automatic mode of operation and the valves are in their normal SGAHRS standby position as shown in PSAR Figure 5.1-5a. The protected air cooled condensers (PACC) are on standby with the fans off and louvers closed. All manual interface valves with the Steam Generator System (SGS) are open.

The periodic test procedure is as follows:

(1) Initiate the Plant Data Handling and Display System (PDH&DS) Procedure for Test Trip Review for recording the following variables:

a. PWST level and temperature
b. AFW pump inlet and discharge pressure
c. AFW pump discharge temperature
d. AFW flow
e. AFW recirculation flow
f. AFW recirculation valve position

g. AFW control valve position
h. AFW isolation valve position
i. AFW turbine isolation valve position
j. AFW turbine pressure control valve position
k. Drive turbine steam inlet pressure
l. Drive turbine exhaust pressure
m. Drive turbine speed
n. Drive motor speed
o. Steam drum pressure
p. Steam drum level

(2) Manually start the system for this test with the SGAHRS AFW switch. System startup is entirely automatic upon receipt of the initiation signal. The following automatic actions constitute startup of the SGAHRS in the system test mode and occur as a result of manual operator initiation:

a. Drive turbine steam supply valves (52AFW118A, B, C) open and steam is supplied to the AFW pump drive turbine (52AFN001) which in turn drives the full-size AFW pump (52AFP001). The drive turbine pressure control valve (52AFV121) opens to modulate steam pressure at 1000 psig at the drive turbine inlet.

b. AFW pump drive motors (52AFK001A, B) start and drive the half-size AFW pumps (52AFP002A, B).

c. AFW isolation valves (52AFV103A through F) open.

d. AFW flow control valves (52AFC104A through F) begin control of AFW flow. In the SGAHRS test mode these valves will close because the steam drum level is being maintained at the normal water level (NWL) by the feedwater system. Since the setpoints for the motor-driven pumps are at 4 in. below NWL, and 18 in. below NWL for the turbine driven pump, no flow from the SGAHRS will be injected into the steam drums.

e. AFW pump recirculation valves (52AFV108A, B, C) begin their recirculation flow function. In the SGAHRS test mode these valves will remain open because no flow is being supplied to the steam drums.

The following automatic functions, which normally occur with a SGAHRS initiation, are suppressed during the system test in order to prevent unwanted loss of Steam Generator System inventory and tripping of the turbine:

- Opening of the superheater vent control valves (52AV116A, B, C)
- Open of the steam drum vent control valves (52AFV117A, B, C)
- Closure of the superheater outlet isolation valves (53SGV012)

- o Closure of the steam drum drain valves (53SGV014 and 015)
- o Opening of the PACC noncondensible vent valves (52ACV129A through F)
- o Startup of the PACCs

(3) Observe and confirm the operation of the Auxiliary Feedwater Subsystem after the test initiation. The following status represents the normal operation of the AFW Subsystem under test conditions:

a. Motor-driven AFW pumps (52AFP002A, B) running at rated speed.
b. Drive turbine steam supply isolation valves (52AFV118A, B, C) are open.
c. Drive turbine pressure control valve (52AFV121) is open.
d. AFW pump drive turbine (52AFN001) and turbine-driven AFW pump (52AFP001) running at rated speed.
e. AFW flow control valves (52AFV104) are closed.
f. AFW isolation valves (52AFV103) are open.
g. AFW pump recirculation valves (52AFV108) are open.
h. Superheater vent control valves (52AFV116) are closed.
i. Steam drum vent control valves (52AFV117) are closed.
j. Superheater outlet isolation valves (53SGV012A, B, C) and steam drum drain valves (53SGV014 A, B, C and 105 A, B, C) are open.
k. PACC noncondensible vent valves (52ACV129A through F) are closed.

(4) Shut the AFW Subsystem down after 2 minutes and use the plant computer printout to verify all parameters. The subsystem is shut down and returned to standby.

(5) Evaluate the system test results recorded by the PDH&DS and perform corrective maintenance on those components requiring it as demonstrated by the test data and repeat test if necessary.

The following SGAHRS actuated valves also require periodic test:

- o Superheater Vent Control (52AFV116A, B, C)
- o Steam Drum Vent Control (52AFV117A, B, C)
- o PACC Noncondensible Vent (52ACV129A through F)

At intervals of three months these valves will be exercised, one at a time, to the position required to fulfill their function. The procedure for the exercising test is as follows:

(1) Isolate the appropriate isolation valve upstream of the valve to be tested.

(2) Transfer control switch of the valve to be tested to the manual mode (skip this step if no such switch is provided for the valve).

(3) Open the valve using the start/stop switch and the manual controller (or open/close switch).

(4) Confirm the necessary valve movement by exercising the valve while observing the appropriate Control Room or local panel position indicator.

(5) Close the valve being tested.

(6) Open the appropriate upstream isolation valve closed in Step (1).

(7) Transfer control switch for the valve back to automatic mode.

(8) Repeat Steps (1) through (7) in turn for each valve to be tested.

(e) Pressure relief valves at the superheater

The safety relief valves will be removed and bench tested during plant shutdowns at intervals consistent with ASME code requirements for safety valves. Periodic testing during plant operation is not planned.

Question CS421.49

Discuss the design of the CRBR purge system. Provide the effects of the argon purging of the cover gas spaces on the Radioactive Argon Processing System's measurement of tag samples (CRBR PSAR Section 7.5.4.1.3).

Response:

A clarifying revision has been made to PSAR Section 7.5.4.1.3. The argon purge is described in Section 9.5.1.2.1. RAPS is described in Section 11.3.

The action of RAPS is to clean the cover gas of xenon and krypton gases. This removes the fission gases (radioactive and stable xenon and krypton gases) and tag gases (stable xenon and krypton gases) released from "old" leakers and thus, improves the capability for both detection and location of newly occurring fuel pin leakers.

Question CS421.50

Please discuss how a single failure within the Plant Service Water system and/or the Emergency Chilled Water System affects safe shutdown.

Response:

A single failure within the Normal Plant Service Water System has no effect on the safe shutdown of the plant. The Normal Plant Service Water System serves no safety function. If there is a failure of the Normal Plant Service Water System the Emergency Plant Service Water System is automatically initiated to maintain safe shutdown.

Single Failure Analysis of the Emergency Chilled Water System is found in Table 9.7.5.

Single Failure analysis of the Emergency Plant Service Water System is found in PSAR Table 9.9-6.

Question 421.51

Using drawings (schematics, P&ID's), describe the automatic and manual operation and control of the atmospheric relief valves (superheater). Describe how the design complies with the requirements of IEEE-279 (i.e., testability, single failure, redundancy, indication of operability, direct valve position indication in control room, etc.).

Response:

The atmospheric relief valves on the superheater outlet line, valves 53SGV106, 107, & 108 in Figure 5.1-4, provide overpressure protection for the superheater and also provide superheater blowdown capability in the event of a sodium/water reaction event.

The overpressure protection is provided when the steam pressure reaches the valve set pressure. The steam pressure overcomes the force exerted by a spring on the pilot valve and opens the pilot valve. This action then causes the main valve to go to the full open position, where it remains until the pressure in the steam line is reduced below the set pressure. Both the pilot valve and the main valve then close. This valve is designed to meet all requirements of the ASME Code, Section III, Class 3, for overpressure protection devices.

An electro-pneumatic actuator is installed on the pilot valve of each superheater and evaporator relief valve, which can open, but not close the valve. For evaporator and superheater blowdown following a SWRPRS event, the relief function is actuated automatically when the SWRPRS is activated (See PSAR Section 7.5.6.1.2 and Figure 7.5-6 for SWRPRS trip logic). SWRPRS actuation of these valves is not safety related.

Each evaporator and superheater outlet relief valve can also be opened individually by means of a control button on the main control panel. This control, along with other valve controls, permits the operator to isolate and blow down a single module in the event that a small leak is identified in an evaporator or the superheater module and the plant is being shut down before a rupture disk bursts.

The requirements of IEEE-279 do not apply to the superheater outlet safety/relief valves, since these valves perform their overpressure protection function independent of the electro-pneumatic actuator. Overpressure protection is discussed in Section 5.5.2.4 of the PSAR.

Valve position is indicated in two ways:

(1) An electromagnetic switch senses the position of the electro-pneumatic actuator on the pilot valve stem and actuates position lights in the main control to verify the pilot valve has been opened electrically.

(2) Acoustic sensors are attached to the valve discharge pipes near the valve outlet to verify the presence of flow through the valve and actuates a group alarm in the main control room. The acoustic sensors are capable of detecting small leaks from a valve which has closed, but not fully re-seated itself and thus, provide direct indication of valve position.

Question CS421.52

Describe how the effects of high temperatures in reference legs of steam drum water level measuring instruments subsequent to high energy breaks are evaluated and compensated for in determining setpoints. Identify and describe any modifications planned or taken in response to IEB 79-21. Also, describe the level measurement errors due to environmental temperature effects on other level instruments using reference legs.

Response:

The steam drum water level instrument uses a reference leg which operates at ambient temperature. The maximum cell temperature following a high energy pipe break would be 215°F. This results in the indicated water level being apprximately 1.4 inches above actual water level.

The setpoint which is affected by this event is the 8-inch below normal water level which results in a protection system reactor trip and Steam Generator Auxiliary Heat Removal (SGAHRS) initiation. The 8-inch below normal water level setpoint is such that the trip signal will occur with sufficient water inventory to prevent the water level from going out of range or Steam Drum dryout prior to a reactor trip and SGAHRS initiation.

It should be noted that the three loops in CRBRP are in separate cells, and the environment from a high-energy pipe break will only affect one loop. The other two loops will provide decay heat removal. In addition, the 1.4 inch higher than actual indication does not affect the ability to monitor the water level in the affected loop during post accident monitoring.

IEB 79-21 identifies the need for bias circuits to correct large increases in indicated versus actual water level indication as a result of increased ambient temperature. This is due to the long steam generator reference legs in pressurized water reactors. In CRBRP the steam drum has a short reference leg (38 inches). Therefore, CRBRP level instruments do not have this large magnitude of level inaccuracy as a result of high ambient temperature. The small increase of 1.4 inches in indicated level above the actual level is well within the setpoint margin, to ensure that water inventory is maintained within the level instrument range during the event and post accident monitoring. Therefore, there is no need for compensation circuits or channel modification.

Level instruments in the Reactor Primary Heat Transport System and Intermediate Heat Transport System do not need nor use reference legs.

Question 421.53

Section 7.2.1.1, paragraph 2, of the PSAR states the Primary RSS is comprised of 24 subsystems and the Secondary RSS is comprised of 16 subsystems. Each of these subsystems consists of three physically separate redundant instrument channels. This information contradicts the information in Table 7.2-1 and Figure 7.2-2B and 7.2-2D, which shows there are 8 subsystems in the Primary RSS and 7 subsystems in the Secondary RSS. Shouldn't it be that the Primary RSS allows 24 inputs, the Secondary RSS allows 16 inputs? There are 8 subsystems in the Primary RSS providing 17 inputs to the Primary RSS logic and the Secondary RSS consists of 7 subsystems providing 16 inputs to the Secondary RSS logic as follows:

PLANT PROTECTION SYSTEM PROTECTIVE FUNCTIONS

Primary Reactor Shutdown System	# of Inputs
1. Flux-Delayed Flux (Positive and Negative)	2
2. Flux-Pressure	1
3. High Flux	1
4. Primary to Intermediate Speed Mismatch	3
5. Pump Electrics	3
6. Reactor Vessel Level	1
7. Steam-Feedwater Flow Mismatch	3
8. IHX Primary Outlet Temperature	3
9.	7 Spare

Secondary Reactor Shutdown System	
1. Modified Nuclear Rate (Positive and Negative)	2
2. Flux-Total Flow	2
3. Startup Nuclear	1
4. Primary to Intermediate Flow Ratio	2
5. Steam Drum Level	3
6. Evaporator Outlet Sodium Temperature	3
7. Sodium Water Reaction	3
	0 Spare

Response:

The Primary RSS coincidence logic allows 24 comparator inputs, the Secondary RSS coincidence logic allows 16 comparator inputs. Not all of the potential inputs are presently utilized. Table 7.2-1 has been revised to indicate the number of inputs.

Question 421.54

Section 7.1.2.1 of the PSAR states the PPS includes the Reactor Shutdown System (RSS), the Containment Isolation System (CIS), and the Shutdown Heat Removal System (SHRS).

Table 7.5-1 of the PSAR states that the following are safety-related sub-systems and part of the PPS.

Wide Range Flux Monitoring
Power Range Flux Monitoring
Reactor Inlet Pressure
Primary and Intermediate Flow on Heat Transport Loops
Evaporation Sodium Outlet Temperature on Heat Transport Loops
Primary/Secondary Pump Speed on Sodium Pumps
Feedwater Flow on Steam Generator
Feedwater Temperature on Steam Generator
Superheat Steam Temperature on Steam Generator
Steam Drum Pressure on Steam Generator
Superheat Steam Pressure on Steam Generator
Rupture Discs Operation on Sodium-Water Reactor Pressure Relief

Why aren't these subsystems covered as part of the PPS in Section 7.1.2.1 of the PSAR?

Response:

The safety related instrumentation in Table 7.5-1 identified in the question is PPS instrumentation and is described in Section 7.5 in accordance with the Standard Format and Content (SFAC).

Section 7.1.2.1 describes the design bases for the safety related systems. Since this instrumentation is a part of the PPS. the same design bases described in 7.1.2.1 have been applied to the design of this instrumentation. For clarity, 7.1.2.1 has been modified to so state.

Question 421.55

Section 7.2.2 of the PSAR provides the General Functional Requirements. The periodic testing requirement states that the Plant Protection System (PPS) is designed to permit periodic testing of its functioning including actuation devices during reactor operation.

It is not apparent from the PSAR, Chapter 7, that the PPS subsystems identified in Table 7.5-1 meet the general-periodic testing requirement.

Response:

PPS instrument channels listed in Table 7.5-1 are provided with the following on-line test features. In general, an overlapping type of test is used to provide complete coverage by the tests.

a. The sensors are checked by cross checking between redundant PPS channels or between channels that have a known relationship to each other. Redundant PPS channels are compared by the operator and by the Plant Data Handling and Display System.

b. Each instrument channel includes provisions for insertion of a test signal on the sensor side of the signal conditioning electronics. Test points are built into the channel design to allow measurement of channel performance.

c. During testing, the channel under test will be placed in a tripped condition.

d. Using the test signal inputs in (b), the instrument channel electronics, including comparators, are tested for proper response to a trip level test signal.

e. The Primary RSS and CIS logic is tested for proper function by inserting test pulses to the trip comparators and monitoring the logic output for proper response to combinations of trip inputs.

f. The Primary scram breakers are tested by manually inserting a trip signal into one of the Primary RSS logic trains and verifying that the scram breakers associated with that logic train open.

g. Due to the general coincidence type of logic in the Secondary RSS, the instrument channel test signal will propagate through the trip logic to the solenoid valves. Therefore, tripping the instrument channel will also provide a test of the Secondary RSS logic.

h. The CIS breakers are tested by inserting trip signals at the comparators and verifying that the CIS breakers open.

i. The HTS pump breakers are tested by inserting a test breaker to bypass the HTS pump breaker during the test period. A trip signal is manually inserted into the pump trip logic and proper breaker operation is verified.

Provisions for time response testing is provided as described in the Response to Question 421.08.

Question 421.56

Discuss the reason for not providing spare inputs to the Secondary Shutdown System since the Primary Shutdown System has seven spare inputs.

Response:

The Primary Shutdown System design is based upon the hardware design utilized for the Fast Flux Test Facility shutdown system. This hardware design accepted inputs in groups of 8. Thus, with 17 active inputs, the hardware configuration required will provide for a maximum capability of 24 inputs for the Primary Shutdown System.

As only 16 inputs were required for the Secondary Shutdown System, the hardware configuration was limited to take only this number. Provision of an additional unused group of spares was considered to be inappropriate. This was on account of the general coincidence logic of the secondary system in which increases in interconnected equipment can increase the probability for spurious scrams.

Question CS421.57

PSAR Section 7.7.1.5 discusses steam drum water level control. Discuss the operation of this control system. Include information on what consequences (i.e., overfilling the steam generator system and causing water flow into the steam piping, etc.) might result from a steam generator level control channel failure.

Be sure to discuss hi-hi (12 inches) steam generator level logic for main feedwater isolation.

Response:

PSAR Section 7.7.1.5 has been updated in response to this question.

The control system for the purpose of responding to this question is subdivided into three parts. These are:

- o input signals
- o level control circuit
- o control valve.

The steam drum level control circuit has a three element (steam flow, feedwater flow and steam drum level) controller and a median select module for each of the three redundant measurement channels for each input signal.

Failure of one of the input signals will result in the median select circuit selecting one of the two remaining good channels for control purposes.

Failure of the level control circuit (including median select circuit) which could result in flooding of the steam drum is mitigated by two independent Class 1E high steam drum water level trips which are set at 8 inches and 12 inches above normal water level. The 8 inch logic train closes the steam drum isolation valve and the main and startup bypass feedwater control valves. The 12 inch logic train closes the feedwater isolation valve.

Failure of the control valves which results in an increased steam drum water level will result in the same trips as discussed above for a failure in the level control circuit. Although the control valves may not respond to the 8 inch trip, the steam drum inlet isolation valve will still respond to the 8 inch trip.

The Class 1E trip circuits also isolate the steam generator auxiliary heat removal system, auxiliary feedwater (AFW). The 8 inch trip isolates the AFW steam isolation valves for the motor driven pumps and the 12 inch trip isolates the turbine driven pump AFW steam drum isolation valves.

The steam drum outlet nozzle which provides steam to the superheater is located 35 inches above normal water level and the steam dryers are also located well above the 12 inch trip setting. Since there are two redundant Class 1E logic trains which close redundant feedwater valves and since the steam drum can function properly at the 12 inch trip level the entry of water into the superheater inlet line need not be considered.

Question CS421.58

Recent review of a plant (Waterford) revealed a situation where heaters are to be used to control temperature and humidity within insulated cabinets housing electrical transmitters that provide input signals to the reactor protection system. These cabinet heaters were found to be unqualified and a concern was raised since possible failure of the heaters could potentially degrade the transmitters, etc.

Please address the above design as it pertains to CRBR. If cabinet heaters are used then describe as a minimum the design criteria used for the heaters.

Response:

The only CRBRP IE equipment which use cabinet heaters are the Sodium Pump Drive System PPS Breakers. The heaters are Class 1E and are qualified to temperature and humidity environments of 125°F and 90% relative humidity.

When heaters are used in IE cabinets, it is a CRBRP requirement to environmentally qualify them according to IEEE 323, if the heaters are required to enable the equipment in the cabinet to perform its safety function.

Question CS421.59

Table 7.1.4 gives a list of RDT Standards applicable to Safety Related Instrumentation and Control Systems. The RDT standards are intended for use by non-commercial reactors, therefore the staff does not normally require compliance with these standards. However, since the applicant is taking credit for their applicability, we have reviewed the CRBR design using criteria noted in RDT Standard C16-1T and the following items were noted:

1. Section 7.2.2 of the PSAR states:

   "The Plant Protection System meets the safety-related channel performance and reliability requirements of the NRC General Design Criteria, RDT Standard C16-1T, IEEE Standard 279-1971, applicable NRC Regulatory Guides and other appropriate criteria and standards."

   RDT Standard C16-1T states in Section 3.1.3 the following:

   "The PPS does not directly include the reactor operator in implementing a Protective Function. However, manual control devices for manual initiation of <u>each</u> and <u>every</u> Protective Action are required for defense against unanticipated events. These manual control devices are considered part of the PPS."

   Section 7.2.2 of the PSAR also states:

   "The Plant Protection System includes means for manual initiation of each protective action at the system level with no single failure preventing initiation of the protective action. Manual initiation depends upon the operation of a minimum of equipment because the manual trip directly operates the scram breakers, solenoid scram valve power supply, or equivalent for Shutdown Heat Removal and Containment Isolation System."

   Are the RSS, the Shutdown Heat Removal System, and the Containment Isolation System the <u>only</u> systems of the PPS that initiate a Protective Action?

2. RDT C16-1T states the following in Section 3.2.3.4:

   "The PPS shall limit the consequences of:

   - two concurrent independent Unlikely Faults,

   - other combinations of concurrent independent faults designated by the RSD (Responsible System Designer),

   to a severity level less than that of the Design Basis Accident."

   Has the analysis for the PPS been based to include the two above conditions?

3. RDT C16-1T states the following in Section 3.2.4:

"The Protective Functions established by the RSD as required in Section 3.2 shall be listed in a tabular format containing, but not limited to, the following column headings:

- o Protective Function;
- o incident, or excursion requiring the specified Protection Action;
- o reference to design basis documentation;
- o monitored variable, including important limitations;
- o Protective Action required;
- o time permitted for completion of Protective Action;
- o critical plant variable (not necessarily a measured variable);
- o permissible limit on critical variable;
- o Protection Margin;
- o worse case Set Point;
- o required or acceptable instrument Accuracy;
- o nominal Set Point;
- o remarks."

4. RDT C16-1T states the following in Section 3.3:

"3.3 Essential Performance Requirements (EPR)

The EPR for all relevant PPS equipment shall be determined using the results of the analyses that establish each of the required Protective Functions, together with the environmental conditions to which the Protective Subsystem(s) in question will be subjected. The most stringent performance requirements so determined shall be the basis for the equipment specifications.

3.3.1 Range of Environmental Conditions

The Design Basis shall contain a statement of the range of environmental conditions under which the PPS must perform during normal, abnormal, and accident conditions, for example:

- o transient and steady-state conditions of the electric power supply (voltage, frequency);

- transient and steady-state conditions of other utility supplies (coolant, compressed air or gas, etc.);
- temperature;
- humidity;
- pressure;
- vibration;
- radiation.

3.3.2 Credible Single Events

The Design Basis shall contain a list of the malfunctions, accidents, and natural events against which the PPS is to have defenses, for example:

- falling objects;
- single structural failures;
- leaking or broken supply piping (local flooding);
- local fires;
- local explosions;
- missiles;
- lightning;
- wind;
- earthquake.

3.3.3 Instrument Channels

The Essential Performance Requirements of each Instrument Channel shall be determined from the requirements for each Protective Function tabulated as required by Section 3.2 and shall be documented by the PPS designer. The following are examples of Instrument Channel EPR's which should be listed:

- accuracy,
- response time,
- repeatability,
- sensitivity,
- gain,
- range,

- span,
- range of environmental conditions and utility supplies within which the EPR must be met,
- range of environmental conditions and utility supplies within which the EPR need not be met, but damage to the PPS Components is not incurred.

3.3.4 Logic Elements

The EPR of the Logic Elements shall be determined for the limiting Protective Function tabulated as required by Section 3.2, and shall be documented by the PPS designer. The following are examples of logic element EPR's which should be listed:

- response time,
- hysteresis,
- range of environmental conditions and utility supplies within which the EPR must be met,
- range of environmental conditions and utility supplies within which the EPR need not be met, but damage to the PPS Components is not incurred.

Provided that these ranges differ from those specified for the Instrument Channels.

3.3.5 Actuators

The EPR of the Actuators shall be determined for the limiting Protective Function tabulated as required by Section 3.2, and shall be documented by the PPS designer. The following are examples of Actuator EPR's which should be listed:

- design life;
- device release time;
- acceleration;
- environmental conditions;
- force, horsepower, torque;
- reliability;
- velocity;
- control valve stroke time;
- pneumatic operator fill time;
- structural constraints.

NOTE: This list of EPR's refers mainly to control (shim, safety) rods and valves. A conceptually related list should be prepared for other devices.

3.3.6 Power Sources

The Design Basis shall list the characteristics of the essential load requirements and the length of time each must be carried and state the required source of power for each.

3.3.7 Testing

The Design Basis shall identify and provide justification for the type of testing (either periodic, monitoring, or none) which will be used to confirm the ability of each item of PPS equipment to meet each of its EPR's."

Are these to be found in the Design Basis? They are not found in the PSAR or SDD.

5. RDT C16-1T states the following in Section 4.4:

"PPS equipment and its installation shall be of a quality consistent with the reliability requirements of paragraph 4.1.2. Prior to initial reactor operation, it shall be established for the entire PPS that all Components are fundamentally capable of meeting the requirements set forth in the Design Basis, and the quality assurance program requirements set forth in Section 5. Compliance with applicable requirements of MIL-N-52335 is recommended but not required."

Are these intentions to show or is it documented somewhere that the instrumentation meets the requirements set forth in the Design Basis? This type of information is not found in the PSAR or SDD.

6. RDT C16-1T states the following in Section 4.5.7:

"Instrument Channel Bypass shall not be provided unless justified by the RSD. If justified, provisions may be made for permanently installed arrangements to routinely bypass single Instrument Channels in only those systems that have "extra" redundancy, such as 2-of-4 or 1-of-3 systems. Bypasses are not allowed in designs have 1-of-2 taken twice. The system must be able to carry out every Protective Function after any Internal Random Failure at all times. These provisions shall meet the following requirements.

a. Means shall be provided to limit the number of Instrument Channels that can be bypassed at a given time in order that redundancy shall be maintained.

b. The fact that any Instrument Channnel is bypassed shall be visually and audibly annunciated in the control room. The annunciation shall identify the Instrument Channel being bypassed. Reset of the audible annunciation shall require a deliberate manual action by the operator.

c. Test means shall be provided for the purpose of confirming proper Instrument Channel reconnection after removal of a Bypass.

d. The means provided for bypassing shall not cause the violation of any of the requirements of this Standard. Particular attention shall be given to meeting the requirements of Section 4.2.

Unanticipated conditions may require Instrument Channel Bypasses until formal bypassing means can be designed and installed. Also, certain maintenance and troubleshooting operations may require temporary Bypasses. Such Bypasses are potentially unsafe and are to be avoided as a means for routinely altering Protective Functions. When such Bypasses cannot be avoided, supervised Instrument Channel Bypasses must be applied manually on an individual basis. Adequate administrative control is required to insure that a sufficient number of Instrument Channels will not be bypassed to negate a Protective Function and that such a Bypass is removed when no longer required. Additionally, provisions are necessary to confirm that the Instrument Channel operates properly after the Bypass is removed. Administrative control of such temporary Bypasses shall meet the intent of the requirements of this paragraph, a through d above. See also paragraph 4.8.3."

The requirement allows instrument channel bypasses, but does not allow bypassing of entire systems which provide protective functions. Has an exception been taken to this requirement?

7. If bypassing of the PPS systems is accomplished by operating mode selection then Section 4.5.8 of RDT C16-1T states:

"The PPS shall be arranged so that the required protection is obtained automatically when the reactor operating mode is selected."

For any PPS bypasses using operating mode selection, do they meet the requirement of Section 4.5.8?

8. RDT C16-1T, Section 4.5.9 states the following:

"The operator shall be provided with accurate, complete, and timely information pertinent to the plant conditions requiring Protective Action and to the status of each Protective Subsystem and the PPS as a whole. This information shall include but not be limited to the following:

a. A recording or indication of each plant variable required to be monitored in order to provide Protective Action (see paragraph 4.6.3.2). If a sampled data system is used, the sampling frequency shall be consistent with the maximum rate of change of the recorded variable.

b. Status of bypasses.

c. Indication of the position of Actuators. (On-off, open-closed, or variable position indication shall be dictated by the operating mode of the Actuator in question). The status shallbe monitored by themost practical means consistent with paragraph 4.5.1.

d. State of each Instrument Channel output Bistable in the PPS. The fact that a channel output Bistable has tripped shall be visually and audibly annunciated in the control room and reset of the visual annunciator shall require deliberate manual action by the plant operator. The audible annunciator may be reset automatically.

e. State of all Operation System equipment which has major influence on the PPS operation.

f. State of all specially controlled conditions for PPS equipment."

Review of the PSAR and SDD does not provide information to whether each PPS Bistable is designed to provide visual and audible annunciation in the reactor control room. do the bistables meet this requirement?

9. RDT C16-1T, Section 4.6.3, states the following:

"4.6.3.1 Monitoring - Continuous testing in the form of monitoring signals within the PPS shall be applied in accordance with the following requirements:

a. In general, capability for continuous monitoring shall be provided to detect those failures or conditions that could potentially result in the inability to implement a Protection Function(s) from the failure of a sufficient amount of equipment either simultaneously or in a time interval shorter than the interval between periodic on-line tests. The required time interval between tests shall be determined in accordance with Section 4.1.2.

b. Monitoring shall be provided in Protective Subsystems that do not employ coincidence and also have a required interval between tests shorter than the planned reactor operating interval.

An unsafe Failure detected in any one Protective Channel of a group of three or more Protective Channels comprising a given Protective Subsystem shall cause an alarm automatically. If detected unsafe Failures accumulate to the point that only one Protective Channel remains with no detected failure, provisions shall be made to automatically initiate a controlled action of the remaining Protective Channel Actuators. (This controlled action need not be as rapid as the intended Protective Action.)

4.6.3.2 Surveillance - The PPS shall be physically arranged and instrumented so that surveillance, through the use of all available information, can be performed with the objective of detecting the need for calibration, Component Failure, incipient Failure, or other forms of degradation that might escape detection by other means. Bistable input signals for each PPS Instrument Channel shall be displayed clearly, continuously, and individually (also see paragraph 4.5.9)."

Review of the PSAR and the SDD does not provide information to determine whether the continuous monitoring and surveillance requirements are met. Does the PPS meet the requirements of Section 4.6.3?

10. RDT C-16-1T, Sections 4.7.b & c state the following:

"b. The number of power supplies and the arrangement of their circuits for supplying power to the PPS shall be such that in the event of a loss of all off-site power, an Internal Random Failure cannot prevent implementation of any Protective Function due to loss of power."

"c. The consideration of power supply Failures shall include the effects of increases and decreases in voltage of ac and dc supplies, and the effects of increases and decreases in the frequency of ac supplies. Also see paragraph 4.2.3."

Review of the PSAR and SDD does not provide information to determine whether the requirement was considered and met. Do the power supplies for the PPS meet the requirements of Section 4.7.b and c?

11. RDT C-16-1T, Section 5.2, requires the following:

"The following shall be provided in or with the PPS System Design Description(s) (SDD):

a. The Design Basis, containing all information required in paragraph 3 of this Standard.

b. Identification of all the criteria and requirements which the PPS shall meet. Where exceptions to this Standard are proposed, the justification for each such exception shall be included in the SDD.

c. Where justification for certain provisions are required by this Standard, and such provisions are proposed for a PPS, the justification for including these provisions shall be included in the SDD. (For example, see paragraphs 3.3.7, 4.5.1, and 4.5.7.)

d. Identification of the Protective Subsystem(s) which are provided to implement each Protective Function.

e. Description of each Protective Subsystem and the PPS as a whole, including description of all interfaces between the PPS and other systems.

f. A statement of the criteria which will be met by important monitoring and surveillance equipment (see paragraph 3.1.4), and a description of this equipment.

g. A statement of the criteria which will be met by Operation System equipment proposed for use as specified in paragraph 3.2.3.1, and a description of this equipment."

Is the SDD going to be updated to include items a, b, c, d, e, f and g above?

12. The summary of SDD Number 99 states that the PPS includes the Reactor Shutdown System (RSS) and the Containment Isolation System (CIS). This is in contradiction to the PSAR, Section 7.1.2.1, which includes the Shutdown Heat Removal Systems.

    Also, since SDD No. 99 is for the PPS, why are not all the safety related systems identified in Table 7.5-1 as PPS included in this description.

Response:

All references to RDT Standard C16-1T have been removed from the PSAR.

CRBRP is applying appropriate IEEE Standards to the design of Safety Related Instrumentation and Control Systems in accordance with current NRC positions enumerated in the Standard Review Plan. The technical requirements of these standards have been determined to be adequate and appropriate for use on the Project. Accordingly, RDT Standard C16-1T is not used as a basis for licensing, although it may be used in the engineering process. All references to RDT Standard C16-1T have been removed from Chapter 7 of the PSAR.

Question CS430.1 (8.2)

Provide physical layout drawings and/or additional description in the PSAR of the physical independence to be provided between the offsite power circuits in proximity of the plant to the switchyards and from the switchyard to the Class 1E onsite power system. Also provide description of physical independence between Class 1E and the offsite circuits protective relaying.

Response:

K-31 and Fort Loudoun-2 161KV transmission lines (both connected to the reserve switchyard of the CRBRP) provide the two physically independent offsite power sources to CRBRP; details of their routing and construction in the proximity of the plant have been described in Section 8.2.1.1 and 8.2.1.3 of the PSAR.

The CRBRP will be connected to the TVA 161KV grid using four separate connections between the switchyards and the TVA grid as described in Section 8.1 of the PSAR. All four transmission lines are kept continuously energized. The CRBRP design includes two physically separate and electrically independent switchyards, generating switchyard and reserve switchyard. Each of these two switchyards is connected to the TVA grid by two separate 161KV transmission lines. The two connections to the reserve switchyard, from the Oak Ridge Gaseous Diffusion Plant (ORGDP) switchyard of DOE, designated as the K-31 line, and the other to the Fort Loudoun Hydroelectric Plant, designated as Fort Loudoun-2 line, are considered the two physically independent and immediate access circuits. These circuits are located so as to minimize the likelihood of their simultaneous failure under operating and postulated accident and environmental conditions. The physical separation of the four (4) transmission line connections from the TVA 161KV grid to the CRBRP switchyards is shown in Figure 8.2-12. The K-31 transmission line connection crosses over the two connections (Roane and Fort Loudoun 1) to the Generating switchyard. As such, failure of any of the two 161KV line connections to the Generating switchyard will not result in failure of the K-31 or Fort Loudoun-2 lines.

Further, between the CRBRP and the destination substations (K-31 and Fort Loudoun 2):

1. at any one location no transmission line crosses over the two transmission lines to the Reserve Switchyard simultaneously;

2. transmission lines are spaced sufficiently apart such that failure of one line does not affect the other line. (See Figures 8.2-11 and 8.2-12).

The 4.16KV medium voltage (MV) winding of the Reserve Station Service Transformer (RSST) 11AAX005A will be connected to the Medium Voltage switchgear of Class 1E, Division 1 through a non-segregated phase bus duct and to the Medium Voltage Switchgear of Class 1E, Division 3 through a non-segregated phase bus duct and MV cables. The 4.16KV MV winding of the RSST 11AAX005B will be connected to the Medium Voltage Switchgear of Class 1E Division 2 through non-segregated phase bus duct. Similarly, the 4.16KV windings of the Unit Station Service Transformers (USSTs) 11AAX006A and B are

also connected to the Class 1E, Division 1, 2 and 3 Medium Voltage Switchgear through non-segregated phase bus ducts.

Non-segregated phase bus ducts from the RSSTs 11AAX005A and B and USSTs 11AAX006A and B to the Medium Voltage Switchgear of Class 1E, Division 1, 2 and 3 will be physically separated such that failure of any one bus duct will minimize the likelihood of failure of the other bus ducts.

Control and protection circuits for the Reserve Switchyard have been arranged to receive 125V DC power from two independent Divisions A and B DC power distribution systems (see Figure 8.2-13).

The DC equipment of the two divisions are physically separate and electrically independent of each other. The control cables of Divisions A and B are routed in separate trays and conduits.

Question CS430.2 (8.2) (3.1.3.1)

Section 3.1.3.1 of the PSAR indicates that each of the reserve transformers is capable of supplying full power required for the auxiliary AC power distribution system to supply one redundant class 1E division load groups. Figure 8.3.1 of the PSAR in contradiction, shows reserve transformers supplying two Class 1E division loads as well as numerous non-Class 1E loads. Correct the contradiction and describe the capability and capacity of the offsite circuits, including the unit station service and reserve transformers, to supply all connected loads (Class 1E and Non-Class 1E) for all modes of plant operation.

Response:

The two reserve station service transformers located in the reserve switchyard have been designed with the capability to provide power to all plant connected loads (Class 1E and Non-Class 1E) under all modes of plant operation including startup, normal operation, and to facilitate and maintain a safe plant shutdown. One of the two reserve station service transformers also supplies 100 percent power to Class 1E loads of Divisions 1 and 3 and the other reserve station service transformer provides 100 percent power to Class 1E loads of Division 2 as indicated in Figure 8.3.1. Section 3.1.3.1 of the PSAR has been revised to further describe the capability and capacity of reserve unit station service transformers.

The CRBRP is connected to the TVA 161kV grid using two separate and physically independent switchyards - the plant generating switchyard and the plant reserve switchyard. The plant generating switchyard is connected to the TVA 161kV power grid by two 161kV transmission lines. The plant reserve switchyard is connected to the TVA 161kV grid by two physically separate and electrically independent 161kV transmission lines. Each of the four transmission lines is capable of providing power to all connected loads (Class 1E and Non-Class 1E) required for plant startup, normal operation and to facilitate and maintain a safe plant shutdown.

The two unit station service transformers have been designed with the capability to provide power to all plant connected loads (Class 1E and Non-Class 1E) under all modes of plant operation including startup, normal operation and to facilitate and maintain a safe plant shutdown. One of the two unit station service transformers also supplies 100 percent power to Class 1E loads of Division 1 and 3 and the other unit station service transformers provides 100 percent power to Class 1E loads of Division 2.

Question CS430.3 (8.1)

Section 8.3.1.1 of the PSAR indicates that three independent load groups are provided with load group 1 redundant to load group 2. No description as to redundancy of load group 3 has been provided in Chapter 8 of the PSAR. Conversely, Section 3.1.3.1 of the PSAR under criterion 26 response indicates that the power supplies servicing the heat transfer system are fully redundant. Clarify Chapter 8 of the PSAR to indicate redundancy of the 3 divisions.

Response:

The Class 1E electrical distribution system consists of three Class 1E divisions (Division 1, 2 and 3). Each of these divisions is separated physically and electrically from the other two divisions as described in Section 8.3.1.4 and 8.3.1.2.1 of the PSAR. Each of these divisions is provided with an onsite (standby) diesel generator and has the capability to shutdown the plant safely. However, from the consideration of connected loads, Class 1E Divisions 1 and 2 provide power to redundant load groups and as such are described as redundant divisions in the PSAR. Class 1E Division 3 provides Class 1E power to Loop 3 of the Heat Transport System (HTS) and to certain-plant Non-Class 1E loads. The Non-Class 1E loads are connected through an isolation subsystem. Since not all the loads powered from Division 3 are identical or similar to those powered by Division 1 or 2, this division has not been identified as redundant to Division 1 or 2 in the PSAR. However, as far as the HTS is concerned, the Divisions 1, 2 and 3 power supplies are fully redundant serving the Loops 1, 2 and 3 Class 1E loads, respectively. Sections 8.1.2 and 8.3.1.1 of the PSAR have been revised to add the above clarification.

Question CS430.5 (8.3.1)

You state in Section 8.3.1.2.1 that "the standby onsite power supply network has provisions to manually cross-connect the 4.16kV buses of the Division 1 and 2 power supplies in case of extreme emergency". Enumerate and define each case of extreme emergency that would necessitate the use of the interconnections. For each case listed justify its noncompliance with the independence requirement of criterion 15 listed in Section 3.1 of the PSAR.

Response:

Manual cross-connection of 4.16kV Class 1E Division 1 and Division 2 Standby Onsite Power Supplies will be initiated if all of the following extreme emergency conditions occur:

a) Loss of Plant, Preferred, and Reserve Power to 4.16kV Class 1E buses 12N1E003A and 12N1E003B;

b) Diesel 12N1E022A or 12N1E022B failed to start and is determined to be inoperable, and

c) Critical safety-related loads associated with the operative diesel generator have failed and become unavailable.

The manual cross-connection will be disconnected as soon as one of the above conditions cease to exist.

PSAR Section 3.1, Criterion 15, Electric Power Systems, states that "the two diesel generator units will be physically and electrically independent of each other and the offsite AC power supplies".

The Class 1E Division 1 and Division 2 Standby Onsite AC Power Supplies, with a provision for manual cross-connection, meet the criteria for independence of Regulatory Guide 1.6 as follows:

1) No provisions exist for automatically connecting one Class 1E load group to another Class 1E load group;

2) No provisions exist for automatically transferrring loads between redundant Class 1E power sources;

3) Mechanical and electrical interlocks have been provided to prevent an operator error that would result in paralleling of standby power sources;

4) The circuit breakers used for the cross-connection will normally be stored in separate locked dummy compartments. Opening of the doors of these compartments shall be alarmed in the Control Room.

5) The insertion of breakers in the operating compartments used for the cross-connection will be annunciated to the Control room operator.

Therefore, there is no non-compliance with the Regulatory Requirements. PSAR Section 3.1 will be revised to include the following paragraph:

Provision has been made in the safety-related AC distribution system design, for manual cross-connection between the 4.16kV switchgear buses of Class 1E Divisions 1 and 2. Manual cross-connection details are as described in Section 8.3.1.2.1 of the PSAR.

Question CS430.6 (8.2) (8.3.1) (8.3.2)

The response to Criterion 16 in Section 3.1 of the PSAR indicates that periodic tests of the transfer of power between onsite and offsite sources and between the normal offsite supply and the preferred (reserve) supply are performed only during prolonged plant shutdown periods. The response to Criterion 16 implies that the power transfer has not been designed to be testable during operation of the nuclear plant as recommended by IEEE Standard 338-1977 and Regulatory Guide 1.118. In addition it has been implied that the onsite AC and DC systems have all not been designed to be testable during operation of the nuclear plant. Describe compliance with IEEE Standard 338-1977 and Regulatory Guide 1.118 and justify areas of noncompliance.

Response

The design of the power transfer schemes of CRBRP for transfer of power between the normal offsite supply and the preferred (reserve) supply and the onsite AC and DC systems are in full compliance with Criterion 16, IEEE Standard 338-1977 and Regulatory Guide 1.118.

Section 3.1 of the PSAR has been revised to further clarify the conformance of CRBRP design with Criterion 16, IEEE Standard 338-1977 and Regulatory Guide 1.118.

Question CS430.7 (8.3.1) (8.3.2)

You state in Section 8.3.1.1.2 of the PSAR under the subheading "Testing and Inspection", that "In the case an emergency signal is generated during the testing, the circuit breaker cannot be closed immediately." Describe how the design implied by this statement meets the recommendations of IEEE Standard 338-1977.

Response

The periodic testing procedure for the safety-related electrical distribution system meets the recommendations of IEEE Standard 338-1977. The PSAR Section 8.3.1.1.2 subheading "Testing and Inspection" has been revised to reflect the recommendations.

Question CS430.8 (8.3.1) (8.3.2)

Section 8.3.1.2.11 of the PSAR indicates that conductors of the penetration are designed to withstand the maximum short-circuit currents based on the interrupting capability of the protection device associated with the penetration assembly conductors. Position C.1 of Regulatory Guide 1.63, on the other hand, states that the electric penetration asembly versus the conductor should be designed to withstand the maximum short-circuit condition. Justify noncompliance to Position C.1 of Regulatory Guide 1.63.

Response

The electrical penetration conductors and the assembly will be designed to withstand the maximum short-circuit current versus time conditions that could occur given single random failures of circuit overload protection devices in accordance with Position C.1 of Regulatory Guide 1.63. PSAR Section 8.3.1.2.11 has been revised.

Question CS430.9 (8.3.1) (8.3.2)

You state in Section 8.3.1.4 of the PSAR that environmental type test will be performed on cables and terminations that are required to function in a hostile environment. This statement implies that cables or terminations that are not required to function in a hostile environment, will not be environmentally qualified and may not be in compliance with IEEE Standard 323-1974. Justify noncompliance.

Response

All cabling and terminations will be designed, qualified and tested in accordance with IEEE Standard 323-1974 supplemented by Regulatory Guide 1.131.

PSAR Section 8.3.1.4, Part B, has been revised to reflect the above.

Question CS430.10 (8.3.1)(8.3.2)

Section 8.3.1.2.14 of the PSAR indicates that physical separation of circuits and equipment comprising or associated with the Class 1E power system, Class 1E protection systems and Class 1E equipment, will be in accordance with criteria set forth in paragraph 8.3.1.4 of the PSAR. Separation criteria described in Sections 8.3.1.2.14 and 8.3.1.4 of the PSAR is not clear and does not meet the guidelines of IEEE Standard 384 and Regulatory Guide 1.75. For example, the PSAR indicates that non-Class 1E cables in panels will be separated from Class 1E cables so that they will not provide a combustion path between different divisions. Section 5.6.5 of IEEE Standard 384-1974 states that non-Class 1E cables shall be separated by six inches or a barrier. In general no criteria has been described for separation of Class 1E and non-Class 1E cables. Other examples include: (1) no criteria for separation between cables trays and conduits of another division, (2) confusing criteria for the separation of the third division (the design indicates there are three divisions but only two redundant divisions. Separation criteria refers to only two redundant divisions in many cases versus the three divisions), (3) confusing definition for associated cables, (4) no criteria for separation between associated cables and non-Class 1E cables, and (5) no criteria before and after an isolatoin device. Revise your PSAR description of physical separation of circuits to comply with the recommendations of IEEE Standard 384-1974 and guidance of R.G. 1.75 or justify noncompliance.

Response:

The CRBRP physical separation design criteria is fully consistent with the guidelines set forth in IEEE Standard 384-1974 and Regulatory Guide 1.75. CRBRP separation criteria includes requirements for separating each of Safety-Related Divisions 1, 2 and 3 from each of the remaining Safety-Related Divisions in accordance with IEEE Standard 384-1974 and Regulatory Guide 1.75. Items being separated on these bases include Class 1E and associated cabling, circuits, equipment, raceways, and systems.

The PSAR Section 8.3.1.4 has been revised to further clarify consistency with IEEE Standard 384-1974 and Regulatory Guide 1.75 for the following items:

1. Separation of Class 1E and non-Class 1E cables and circuits within control board and other panels.

2. Separation of Class 1E and non-Class 1E cables and circuits.

3. Separation between cable trays and conduits of another division.

4. Criteria for the separation of third division.

5. Criteria for separation between associated cables and circuits and non-Class 1E cables and circuits.

6. Separation criteria before and after an isolation device.

Question CS430.11 (8.3.1) (8.3.2)

You state in section 8.3.1.4.E of the PSAR that only one safety division is routed in a fire hazard zone and that this one division is suitably protected so that a fire in the zone will not effect the safety functions of the other safety groups. This statement does not meet current regulatory guidelines. Current guidelines require that the one division be suitably protected so that fire in the zone will not affect the safety function of the one division located in the zone. The other safety groups must be separated by a three-hour fire rated barrier from the zone.

In addition to current guidelines, it is proposed that if the one division cannot be protected from the effects of fire in the zone (such as in areas of potential sodium fires) there must be a minimum of two remaining safety divisions outside the fire zone and separated by a barrier sufficient to contain the fire. The remaining safety divisions must be capable of safely shutting down the reactor in compliance with the single failure criteria. Indicate compliance with the above current and proposed guidelines in the PSAR or describe and justify an acceptable alternative.

Response

CRBRP equipment arrangements and fire suppression system design has been developed in a manner as to preclude the likelihood of a fire in an area reaching safety-related equipment. Spacial separation and/or walls are provided between fire hazard and safety-related equipment, and general area sprinkler coverage has been provided wherever feasible to protect safety related equipment from potential exposure to fires.

In the event of a fire in a fire zone containing a safety division, which affects that division, there will be two remaining safety divisions outside the fire zone, separated by three-hour fire rated barriers and capable of safely shutting down the reactor. This will be in compliance with the proposed NRC guidelines. Furthermore, the CRBRP design will comply with BTP CMEB 9.5-1 position C.5.d governing the control of combustibles.

Question QCS430.12 (8.3.1) (8.3.2)

Fire hazard zones have been defined in the PSAR as areas in which a potential fire hazard could exist as a consequence of the credible accumulation of a significant quantity of flammable material. Current regulatory guidelines define areas of credible accumulation as any open areas of the plant where transient combustables can be placed. This definition encompasses most areas of the plant including switchgear and cable spreading rooms. Revise the PSAR to incorporate the above definition or describe an alternative definition with justifications.

Response

Those areas of the plant where transient combustibles can be placed will be considered in the fire hazard analysis and will be considered in the selection of fire suppression systems and arrangement of the fire barriers. The definition of Fire Hazard Zones is contained in updated sections 8.3.1.4 and 9.13.1.

> A Fire Hazard Zone is "Areas in which a potential fire hazard could exist as a consequence of the credible accumulation of a significant quantity of fixed or transient combustible material."

The specific areas where transient combustibles are considered will be identified in the Fire Hazard Analysis. Our review of the plant layout indicated that neither the cable spreading room nor the Class 1E switchgear rooms need to be considered for placement of transient combustibles since they are not part of a pathway of any combustible traffic.

Furthermore, administrative controls governing the handling of transient fire loads will be implemented in accordance with BTP CMEB 9.5-1 position C.2c.

Question CS430.13

Separation of Class 1E raceways from high energy pipelines as defined in the PSAR is to be greater than 15 feet or less than 15 feet if the pipe is suitably restrained so as not to whip and strike the raceway. Current regulatory guidelines require that the Class 1E raceway be protected by a barrier so that pipe whip missiles, jet impingement or environmental effects of the pipe break will not cause failure of the Class 1E raceway. Fifteen feet of space is not considered adequate protection. Indicate compliance with the above guidelines in the PSAR or propose, describe, and justify an acceptable alternative.

Response

CRBRP has three (3) Class 1E Divisions with complete physical separation between divisions. Any damage to cable trays caused by pipe whip missiles, jet impingement, or environmental effect will be limited to the same safety division to which the pipe belongs, and the two other divisions capable of safely shutting down the plant will remain unaffected.

Additional protection will be provided against any single Class 1E Division cable tray damage due to high energy pipe whip missiles by restraint of high energy pipe lines in the vicinity of Class 1E raceways. The design of restraints and/or barriers will be determined by analysis to meet BTP APCSB 3-1, rather than the arbitrary 15 foot distance.

Protection against single Division damage due to high energy jet impingement or environmental effect is considered impractical and unnecessary since two additional safe shutdown Divisions will be available as noted above.

Question CS430.14

Separation between redundant raceways as defined in the PSAR takes into consideration the presence of rotating equipment, monorails, and equipment removal paths and the possibility that heavy equipment could be lifted and dropped and possibly cause failure of two raceway channels. Minimum separation between the two raceway channels is to be such as to preclude failure of both channels. Current regulatory guidelines, however, requires protection of each raceway as well as separation so that the dropped equipment will not cause failure of either raceway. An alternative to protection would be a design that provides an additional two independent systems each capable of shutting down the reactor and separated such that neither will be affected by the "dropped equipment" or failure of rotating equipment. Indicate compliance with the above guidelines in the PSAR or describe and justify an acceptable alternative.

Response:

The routing of the safety-related raceways of CRBRP is such that any "dropped equipment" will not result in a failure of any of these raceways.

The CRBRP raceway design is in full compliance with IEEE Standard 384-1974 as supplemented by Regulatory Guide 1.75.

In addition, the safety systems design for CRBRP includes three physically and electrically independent divisions, each capable of shutting down the reactor. Equipment of each of these divisions, are located and cables are routed in separate plant areas such that failure of rotating equipment will not cause failure of more than one safety division. The likelihood of rotating equipment missile damage to Class 1E equipment* is minimized or eliminated by one or a combination of the following:

i) Qualification of Non-Class 1E and Class 1E rotating equipment to prevent missiles during the worst case seismic event (which envelopes normal operating conditions) for that rotating equipment.
ii) Segregate rotating equipment from Class 1E equipment.*
iii) Provide missile protection by walls or barriers for the Class 1E equipment.*
iv) Provide redundant equipment* necessary to meet the single failure criterion.

Division 3 cables within the control room and upper cable spreading room areas are routed in raceways embedded in concrete floors and walls up to the point of entry to the Division 3 panels. There are no Division 3 cables or raceways in either the upper cable spreading room or the lower cable spreading room.

The PSAR Section 8.3.1.4 has been revised.

* Equipment is construed here to include equipment, circuits, cabling, raceways, systems, etc.

See PSAR Section 3.5 for additional information on missile protection.

Question CS430.15 (8.3.1) (8.3.2)

Section 8.3.1.2.14 of the PSAR indicates that Non-Class 1E loads will be connected to one division of the Class 1E system through an isolation device.

a) The proposed design for the isolation device addresses primarily protection of the Class 1E system due to worst case faults in the Non-Class 1E system. Justify why other failures of the Non-Class 1E system such as hot shorts are not considered in the design of the isolation devices.

b) The isolation device is to be designed as indicated in the PSAR so that voltage on the Class 1E system buses will not drop below 70 or 80 percent of nominal given a worst case fault in the Non-Class 1E system. With most Class 1E equipment designed to operate at not less than 90 percent of nominal, justify your design that allows lower voltage.

c) Describe the methods to be used to demonstrate the design capability of the isolation device.

Response

Faults and failure modes other than the worst case three phase fault have also been addressed in the design of the isolation system. However, the analysis provided in the PSAR includes the worst case condition only in order to demonstrate that even under this extreme condition the degradation of the Class 1E system will be within the acceptable limits. Protective devices have been provided in the design to clear any fault on the Non-Class 1E system such as phase to ground, phase to phase, and three phase faults, within a reasonable time such that there is no degradation to the Class 1E system.

a) A phase to ground fault (which is the most likely mode of failure) on a Non-Class 1E circuit will have no effect on the Class 1E system since the isolation system includes a 4.16kV/480V delta-wye connected transformer with the high resistance grounded neutral. The neutral is grounded through a 55.4 ohm resistor which will limit the phase to ground fault current to approximately 5 amperes. The Class 1E 480V and 4.16kV circuit breakers will be tripped to clear a ground fault in the case that the affected Non-Class 1E breaker fails to trip.

   Any phase to phase or three phase fault on the Non-Class 1E circuits will be isolated by instantaneous operation of the affected branch feeder circuit breaker. Back-up protection is provided by fast operation of the 480V supply circuit breaker (0.2-0.3 sec clearing time) or by the 4.16kV unit substation transformer feeder circuit breaker (0.6-0.7 sec clearing time). In addition undervoltage sensors are provided at the input terminals of the 480V supply circuit breaker. These undervoltage sensors will initiate tripping of the 480V and 4.16kV circuit breakers within five (5) seconds upon sensing the undervoltage caused by loss of power or failure of the circuit breakers to clear a fault.

b) The isolation system is designed so that impedance of the system is high enough that the worst possible fault (three phase bolted fault) on the 480V Non-Class 1E bus will not degrade the voltage at 4.16kV Class 1E bus below the following levels:

(1) When the 4.16kV Class 1E bus is being supplied from offsite power supply, the voltage at the bus will not drop below 80 percent of nominal.

(2) When the 4.16kV Class 1E bus is being supplied from onsite (standby) power supply the voltage at the bus will not drop below 75 percent.

The minimum voltage levels of 75 and 80 percent of nominal are chosen to be the same as the allowable minimum voltage levels during the sequential loading of the 4.16kV Class 1E bus or during starting of the largest motor after the bus has been fully loaded.

As discussed in a) above, any fault on 480V Non-Class 1E system will be cleared within five (5) seconds. After the fault has been cleared the voltage at the 4.16kV bus will be restored to a minimum of 90 percent of nominal within two (2) seconds, which will allow all connected loads to operated continuously.

c) The high impedance transformer used as an isolation device will be subjected to a short-circuit withstand test as part of the shop testing program at the manufacturer's facility. After the transformer has been energized a three phase fault will be applied at the secondwary windings for the maximum duration of the fault. The purpose of this test is to demonstrate the mechanical and thermal capability of the transformer to withstand short-circuit stresses which the transformer could experience and to verify the transformer current limiting capability.

Section 8.3.1.2.14 of the PSAR has been revised to add the above discussion.

Question CS430.16 (8.3.1) (8.3.2)

Section 8.3.1.2.14 of the PSAR indicates that analyses and testing of associated circuits will be performed in accordance with paragraphs 4.5(3), 4.6.2 and 5.1.1.2 of IEEE Standard 384-1974. Describe in the PSAR and in detail the analyses and testing that will be performed. The description should include the minimum separation distance between associated and Non-Class 1E cables that will be demonstrated by the proposed analyses and testing.

Response:

All associated circuits as defined in IEEE Standard 384-1974, paragraph 3, will be treated and routed as Class 1E circuits of the same division. The criteria governing routing of Class 1E circuits are given in Section 8.3.1.4 as supplemented by the response to NRC Question CS430.10.

Based upon the above considerations, analysis and testing of associated circuits will not be required, per paragraph 4.5(1) of IEEE Standard 384-1974.

At the present time there are no exceptions to the above criteria; however, if in the future any exceptions are known and the need of an analysis is identified, the details of the analysis and any testing that has been performed to demonstrate that Class 1E circuits are not degraded below an acceptable level will be included in the FSAR.

Revised PSAR Section 8.3.1.2.14 reflects the above.

Question CS430.17 (8.3.1) (8.3.2)

Section 8.3.1.2.22 of the PSAR indicates that the Class 1E system will be designed to assure that a design basis event will not cause loss of electric power to more than one Class 1E load group at one time. This proposed design does not meet IEEE Standard 308-1974, justify noncompliance. Also provide the results of a failure mode and effects analysis in accordance with Section 4.8 of IEEE Standard 308-1974 for a design basis event that causes failure of one load group and a single failure in another load group.

Response

CRBRP electrical power distribution system design is in full compliance with IEEE Standard 308-1974 as described below:

1. All Class 1E electrical equipment will be specified and qualified such that the environmental conditions resulting from any design basis event will not cause loss of electric power to any Class 1E loads related to safety, surveillance or protection, thereby maintaining the safety of the plant at all times.

2. Loss of electric power to any Class 1E equipment or to any Class 1E division will not cause damage to the fuel or to the reactor coolant system.

3. In addition, Class 1E AC and DC Power Supplies and distribution systems have been designed as three physically and electrically independent safety divisions, each capable to safely shutdown the plant and conform to the requirements of Class 1E electrical system.

An analysis of the failure modes of Class 1E power systems and the effect of these failures on the electric power available to Class 1E loads will be performed in accordance with IEEE Standard 308-1974, to demonstrate that a single component failure will not prevent satisfactory performance of the minimum Class 1E loads required for safe shutdown and maintenance of post-shutdown or post-accident plant security. The results of this analysis will be included in the FSAR.

The Section 8.3.1.2.22 of the PSAR has been revised to reflect the above discussion.

Question CS430.18 (8.3.1) (8.3.2)

Section 8.3.1.2.22b of the PSAR states that "A loss of electric power to equipment that could result in a reactor power transient capable of causing significant damage to the fuel or to the plant operation." (See Section 15.1.2.) The last words of the above statement "to the plant operation" are not clear and are inconsistent with Section 4.1 (2) of IEEE Standard 308-1974. Provide clarification and justify noncompliance to IEEE Standard 308-1974.

Response

See the Response to Question CS430.17.

Question CS430.19 (8.3.1) (8.3.2)

You state in Section 8.3.1.2.22 of the PSAR that indicators and controls will be provided outside the control room in compliance with Section 4.4 of IEEE Standard 308-1974. Provide a description of the design provisions that assure electrical isolation between controls and indicators located in the control room and remote locations. The current staff position requires that no single failure in the control room shall cause failure at the remote locations.

Response

Controls and indicators located in the control room are electrically separated from controls and indicators at remote locations. Separation is by independent overcurrent protection for each source, so that overcurrent in the power source for control and indication at the control room does not affect operation of the power source for remote control and indication. Both control circuits (control room and remote) interface in the common control logic in the solid State Programmable Logic System Cabinet where they are electrically isolated. This design satisfies the staff position that no single failure in the control and indication at the control room shall cause failure in the control and indication at the remote location.

Question CS430.20 (8.3.1) (8.3.2)

Describe the source of control power to Division 3 AC switchgear and diesel generator.

Response

Control power to Division 3 AC switchgear and Division 3 diesel generator unit is provided from Division 3 DC power supply described in the PSAR Section 8.3.2.

Table 8.3-2C, "Class 1E Division 3 125V DC Load List", of the PSAR has been revised to include all DC loads required to support operation of Division 3 AC switchgear and Division 3 diesel generator unit.

Question CS430.21 (8.3.1)

Operating experience at certain nuclear power plants which have two cycle tubocharged diesel engines manufactured by the Electromotive Division (EMD) of General Motors driving emergency generators have experienced a significant number of turbocharger mechanical gear drive failures. The failures have occurred as the result of running the emergency diesel generators at no load or light load conditions for extended periods. No load or light load operation could occur during periodic equipment testing or during accident conditions with availability of offsite power. When this equipment is operated under no load conditions insufficient exhaust gas volume is generated to operate the turbocharger. As a result the turbocharger is driven mechanically from a gear drive in order to supply enough combustion air to the engine to maintain rated speed. The turbocharger and mechanical drive gear normally supplied with these engines are not designed for standby service encountered in nuclear power plant application where the equipment may be called upon to operate at no load or light load condition and full rated speed for a prolonged period. The EMD equipment was originally designed for locomotive service where no load speeds for the engine and generator are much lower than full load speeds. The locomotive turbocharged diesel hardly ever runs at full speed except at full load. The EMD has strongly recommended to users of this diesel engine design against operation at no load or light load conditions at full rated speed for extended periods because of the short life expectancy of the turbocharger mechanical gear drive unit normally furnished. No load or light load operation also causes general deterioration in any diesel engine.

To cope with the severe service the equipment is normally subject to and in the interest of reducing failures and increasing the availability of their equipment EMD has developed a heavy duty turbocharger drive gear unit that can replace existing equipment. This is available as a replacement kit, or engines can be ordered with the heavy duty turbocharger drive gear assembly.

To assure optimum availability of emergency diesel generators on demand, applicant's who have in place an order or intend to order emergency generators drive by two cycle diesel engines manufactured by EMD, should be provided with the heavy duty turbocharger mechanical drive gear assembly as recommended by EMD for the class of service encountered in nuclear power plants. Discuss your plans to incorporate this improvement.

Response

The onsite (standby) AC power supplies for CRBRP consist of three diesel generator units. Two of these diesel generators, used for Class 1E

Divisions 1 and 2 have been procured from DeLaval Turbine Inc., Engine and Compressor Division; Oakland, California and do not have the turbocharger related design problems as identified in the NRC concern. The final vendor information regarding the diesel generator for Class 1E Division 3 is presently not available pending completion of the procurement process. However, if the engine of this diesel generator unit (Class 1E Division 3) is manufactured by the Electromotive Division (EMD) of General Motors, the following action will be taken:

a) The unit will be specified with a heavy duty turbocharger gear unit suitable for no load or light load operation of the diesel generator unit for a prolonged time, or

b) If the diesel generator is already manufactured without a heavy duty turbocharger gear unit, the turbocharger gear unit will be replaced with a heavy duty turbocharger gear assembly using the replacement kit from the Electromotive Division of General Motors.

c) The required modifications as discussed under a) and b) above will be completed prior to plant startup.

Question CS430.22 (8.3.1)

Provide a detailed discussion (or plan) of the level of training proposed for your operators, maintenance crew, quality assurance, and supervisory personnel responsible for the operation and maintenance of the emergency diesel generators. Identify the number and type of personnel that will be dedicated to the operations and maintenance of the emergency diesel generators and the number and type that will be assigned from your general plant operations and maintenance groups to assist when needed.

In your discussion, identify the amount and kind of training that will be received by each of the above categories and the type of ongoing training program planned to assure optimum availability of the emergency generators.

Also discuss the level of education and minimum experience requirements for the various categories of operations and maintenance personnel associated with the emergency diesel generators.

Response

There are currently no plans for personnel to be dedicated only to the above listed tasks. The level of training, including the amount and kind of training, that will be received by each of the above categories, the type of training program planned, and the level of education and minimum experience requirements for the various categories of operations and maintenance personnel have not been determined. When these are finalized, information will be included in the PSAR. It is anticipated that the above plans will be very similar to those used by TVA and that manufacturer's recommendations and requirements will be utilized in developing these plans.

Question CS430.23 (8.3.1)

Periodic testing and test loading of an emergency diesel generator in a nuclear power plant is a necessary function to demonstrate the operability, capability and availability of the unit on demand. Periodic testing coupled with good preventive maintenance practices will assure optimum equipment readiness and availability on demand. This is the desired goal.

To achieve this optimum equipment readiness status the following requirements should be met:

1. The equipment should be tested with a minimum loading of 25 percent of rated load. No load or light load operation will cause incomplete combustion of fuel resulting in the formation of gum and varnish deposits on the cylinder walls, intake and exhaust valves, pistons and piston rings, etc., and accumulation of unburned fuel in the turbocharger and exhaust system. The consequences of no load or light load operation are potential equipment failure due to the gum and varnish deposits and fire in the engine exhaust system.

2. Periodic surveillance testing should be performed in accordance with the applicable NRC guidelines (R.G. 1.108), and with the recommendations of the engine manufacturer. Conflicts between any such recommendations and the NRC guidelines, particularly with respect to test frequency loading and duration, should be identified and justified.

3. Preventive maintenance should go beyond the normal routine adjustments, servicing and repair of components when a malfunction occurs. Preventive maintenance should encompass investigative testing of components which have a history of repeated malfunctioning and require constant attention and repair. In such cases consideration should be given to replacement of those components with other products which have a record of demonstrated reliability, rather than repetitive repair and maintenance of the existing components. Testing of the unit after adjustments or repairs have been made only confirms that the equipment is operable and does not necessarily mean that the root cause of the problem has been eliminated or alleviated.

4. Upon completion of repairs or maintenance and prior to an actual start, run, and load test, a final equipment check should be made to assure that all electrical circuits are functional, i.e., fuses are in place, switches and circuit breakers are in their proper position, no loose wires, all test leads have been removed, and all valves are in the proper position to permit a manual start of the equipment. After the unit has been satisfactorilfy started and load tested, return the unit to ready automatic standby service and under the control of the control room operator.

Provide a discussion of how the above requirements have been implemented in the emergency diesel generator system design and how they will be considered when the plant is in commercial operation, i.e., by what means will the above requirements be enforced.

Response

1. During periodic testing and test loading, each diesel generator unit will be tested at load in excess of the minimum 25 percent of the unit rated load, as described in Section 8.3.1.1.1 of the PSAR.

2. Diesel engine surveillance testing will be performed in accordance with NRC Regulatory Guide 1.108 (Rev. 1, 8/77) as described in Section 8.3.1.1.1 of the PSAR and in accordance with recommendations of the diesel engine manufacturer. Any conflicts between the manufacturer's recommendations and the NRC guidelines will be identified and discussed after receipt of the manufacturer's surveillance testing recommendations.

3. The Plant Maintenance Group, through the review of Work Requests, Licensee Event Reports and Surveillance Test Reports, will maintain awareness of problems associated with the diesel generator units. Repeated problems with any equipment or component important to safety will become a subject for a plant investigation to determine if the cause of the problem is related to improper maintenance, improper operation, poor design, or manufacturing deficiencies. If the problem is determined to be caused by improper maintenance or operation, preventative measures such as proper training or procedure changes will be implemented. If the problem is determined to be caused by design or manufacture, a request will be made to engineering for an evaluation and/or solution.

4. Administrative Procedure will specify for all systems, including the diesel generator units, that shift supervision shall "require a checklist to be performed on the affected system and on portions of other systems located in the areas in which significant maintenance was performed". Based on the activities performed, this checklist will include such items as valves, electrical and instrument alignments, tests to ensure that electrical circuits are functional, wiring check for loose connections, visual checks to ensure that proper fuses are in place and that the circuit breakers and disconnect switches are in proper position, etc.

Question CS430.24 (8.3.1)

The availability on demand of an emergency diesel generator is dependent upon, among other things, the proper functioning of its controls and monitoring instrumentation. This equipment is generally panel mounted and in some instances the panels are mounted directly on the diesel generator skid. Major diesel engine damage has occurred at some operating plants from vibration induced wear on skid mounted control and monitoring instrumentation. This sensitive instrumentation is not made to withstand and function accurately for prolonged periods under continuous vibrational stresses normally encountered with internal combustion engines. Operation of sensitive instrumentation under this environment rapidly deteriorates calibration, accuracy and control signal output.

Therefore, except for sensors and other equipment that must be directly mounted on the engine or associated piping, the controls and monitoring instrumentation should be installed on a free standing floor mounted panel separate from the engine skids, and located on a vibration free floor area. If the floor is not vibration free, the panel shall be equipped with vibration mounts.

Confirm your compliance with the above requirements or provide justification for noncompliance.

Response

Except for sensors and other equipment that must be directly mounted on the engine or associated piping, the controls and monitoring instrumentation for each diesel generator unit are installed on two (2) free standing floor mounted panels separate from the diesel generator unit skids. The control panels will be equivalent to NEMA Type 12 in order to protect the control devices and components from dust and other environment.

The diesel generator units are located in a Seismic Category I building separate from all other plant buildings. The diesel generator units will be installed on their own foundations which are isolated from the main building slab and are designed to eliminate any vibration to control panels. The control panels are located on the main building slab and will not be subjected to engine vibration, and as such, no vibration mounts are required.

Section 8.3.1.1.1 of the PSAR has been revised to include the above clarification.

Question 430.25 (8.3.2)

In Chapter 8 of the PSAR, you discuss three (3) emergency diesel generators. In Chapter 9, however, the discussion of emergency diesel generator auxiliary systems includes only two (2) diesel generators. Revise your PSAR so Chapters 8 and 9 are in agreement. The PSAR revisions should cover the text material, as well as applicable P&ID's and General Arrangement Drawings showing plan, elevation, and section views. Questions asked in Chapter 9 are applicable to all emergency diesel generators.

Response

Chapter 9.14 of the PSAR has been updated to include the description of the three (3) emergency diesel generators. The updated PSAR Chapter 9.14 is provided herewith. The revised PSAR Chapter 9.14 includes the design basis for the Diesel Generator auxiliary system. The generic description of the system is also provided. The P&ID's and General Arrangements are under development and will be provided in later revisions of the PSAR.

Question CS430.26 (8.3.1)

In Section 8.3.1.1.2 of the PSAR, under the heading Circuit Protection, you list the emergency diesel generator protective trips. However, there is no discussion of protection in the event of excessive jacket water temperature of turbo-charger malfunctions. Expand your PSAR to discuss these protective features, or explain why such protection is not required.

Response

The diesel generator units will be provided with surveillance systems permitting Main Control Room and local surveillance and to indicate the occurrence of abnormal, pretrip or trip conditions.

Adequate instrumentation will be provided to monitor the variables for successful operation and to generate the abnormal, pretrip and trip signals required for alarm of the following conditions:

Starting Air System
Lubricating Oil System
Fuel Oil System
Jacket Water Cooling System
Combustion Air Intake System
Exhaust System
Generator
Generator Field
Generator Excitation System

The alarms and indicating devices provided at the Diesel Generator Local Control Panel and the engine mounted control panel (as indicated by an *) are as follows:

Diesel Generator Unit Functions	Indicating Devices	Alarms
- Start	Pilot Light	
- Stop	Pilot Light	
- Unit In Standby Mode	Pilot Light	X
- Unit In Test Mode	Pilot Light	X
- Unit In Maintenance	Pilot Light	X
- Unit Ready to Start	Pilot Light	X
- Unit Fail to Start	Pilot Light	X
- Engine Vibration		X
- Unit Disabled		X
- Generator Vibration		X
- Unit Running Time	Meter	
- Generator Differential Current	Relay Target	X
- Generator Overcurrent	Relay Target	X
- Generator Reverse Power	Relay Target	X
- Generator Loss of Field	Relay Target	
- Generator Field Ground	Relay Target	X
- Generator Ground	Relay Target	X
- Sequence Starting	Pilot Light	
- Generator Field Volts	Meter	
- Generator Field Amps	Meter	
- Generator Kilowatts	Meter	
- Generator Kilovars	Meter	
- Generator Amps	Meter	
- Generator Volts	Meter	
- Generator Frequency	Meter	
- Generator Output Circuit Breaker	Pilot Lights	
- Generator Space Heater	Pilot Lights	

- Generator Lockout	Pilot Light	X
- Unit Loss of DC Control	Pilot Light	X
- Voltage Unbalance (due to blown PT fuses)		X
- Generator Stator Temperature	Meter	
Phase "A" Winding		HI
Phase "B" Winding		HI
Phase "C" Winding		HI
- Each Generator Bearing Temperature	Meter	HI

Engine Starting System Functions:

- Air Receiver #1 - Pressure	*	HI/LO
- Air Receiver #2 - Pressure	*	HI/LO
- Air Compressor #1	Pilot Lights	
- Air Compressor #2	Pilot Lights	
- Air Dryer #1	Pilot Lights	
- Air Dryer #2	Pilot Lights	
- Moisture @ Air Receiver #1		HI
- Moisture @ Air Receiver #2		HI
- Fuel Oil Day Tank Level	Meter	HI/LO
- Fuel Injector Header Pressure	*	LO
- Main Engine-driven Pump Suction Filter Differential Pressure	*	HI
- Main Engine-driven Pump Discharge Filter Differential Pressure	*	HI
- AC Pump Suction Filter Differential Pressure	*	HI
- AC Pump Discharge Filter Differential Pressure	*	HI
- Fuel Oil Day Tank Conductivity	Meter	HI
- AC Fuel Pump	Pilot Lights	HI

- F.O. Transfer Pump #1	Pilot Lights	
- F.O. Transfer Pump #2	Pilot Lights	
- F.O. Transfer Pump #1 Suction Strainer Differential Pressure	Meter	HI
- F.O. Transfer Pump #2 Suction Strainer Differential Pressure	Meter	HI
- F.O. Storage Tank Level	Meter	LO
- F.O. Storage Tank Conductivity	Meter	HI
- Turbo Aftercooler Water Inlet Temperature	Meter	
- Turbo Aftercooler Water Outlet Temperature	Meter	
- Turbo After Cooler Water Outlet Temperature	Meter	

Engine Cooling System Functions:

- Jacket Water Expansion Tank Level		LO
- Jacket Water Header Pressure		LO
- Jacket Water Temperature	*	HI/LO
- Jacket Water Heater	Pilot Lights	
- Jacket Water Heater Pump	Pilot Lights	
- Flow Service Water	Meter	LO
- Lubricating Oil Sump Level	Meter	LO
- Lubricating Oil Header Pressure	*	LO
- Lubricating Oil Temperature	*	HI/LO
- Crankcase Pressure	*	HI
- Lubricating Oil Heater	Pilot Lights	
- Lubricating Oil Heater Pump	Pilot Lights	
- Lubricating Oil Discharge Filter Differential Pressure	*	HI

Engine Speed and Load Control System Functions:

- Governor

- Unit Speet	Tachometer	HI

Excitation System Functions:

- Static Exciter Diode Failure	Pilot Lights	X
- Generator Voltage Regulator		

- Generator Voltage Regulator

---

*denotes that indicating devices are provided on the engine-mounted control panel.

The alarms and indicating devices provided in the Main Control Room are as follows:

DIESEL GENERATOR UNIT FUNCTION	INDICATING DEVICES	ALARMS
Engine Trouble		X
Crankcase Pressure		HI
Unit in Standby Mode	Pilot Light	
Unit not available	Pilot Light	X
Synchronization	Synchroscope	
Power Output	Wattmeter	
Generator Output	Ammeter	
Generator Frequency	Frequence Meter	
air Receiver Pressure		LO
Diesel Generator Trip		X
Engine overspeed		X
Generator Differential Protection		X
Lube oil Pressure		LO
Jacket Water Temperature		HI/LO
Generator Field Ground		X
Bearing Temperature		HI
Engine Vibration		HI

The following protections are provided to trip the Diesel Generator unit during the testing mode:

Engine overspeed
Low Lubricating Oil Pressure
Generator Differential Overcurrent
Generator Overcurrent
Reverse Power Flow to Generator
Generator Loss of Field
Generator Ground
Generator Field Ground
High Jacket Water Temperature
Excessive Engine Vibration

After an automatic start of the Diesel Generator under a plant emergency condition, all protective functions will be bypassed except for the following as described in Section 8.3.1.1.2 of the PSAR:

Generator Differential Overcurrent
Engine Overspeed

The emergency Diesel Generator will be provided with protection against excessive jacket water temperature, such that the operator will be alarmed if the temperature exceeds 190 F and the unit will be tripped on temperature in excess of 200 F during the unit testing. This protective trip feature will be bypassed when the unit is running in an emergency mode.

The turbo-charger will be provided with alarms for low lube oil pressure, excessive vibration and high jacket water temperature to alert the operator of potential turbo-charger malfunction. The performance of the turbo-charger will be periodically observed during the testing of the unit. Should a failure of some part of the turbo-charger prevent its operation, the engine can be operated as a normally aspirated engine until repairs can be made to the turbo-charger.

The malfunction of the turbo-charger will result in some loss of power output, however, since there is substantial margin in the load capability of the units, the ability of these units to perform their intended function during an emergency will not be affected. This will be confirmed with the vendor at a later date.

Question CS430.27

The PSAR Section covering onsite communications should be expanded to include the following information:

a) Identify all areas from which it will be necessary for plant personnel to communicate with the control room or the emergency shutdown panel during and following transients and/or accidents (including loss of offsite power) in order to mitigate the consequences of the emergency and to attain a safe, cold plant shutdown.

b) Indicate the types of communications that will be available in each of the above areas to provide an adequate communications under all normal operations and design basis accident conditions, including the safe shutdown earthquake.

Response

a) Table QCS430.27-1 identifies the vital areas by building, cell and cell designation from which it will be necessary for plant personnel to communicate with the control room or the emergency shutdown panels during the full spectrum of accident or incident conditions (including loss of offsite power).

b) Table QCS430.27-1 also identifies the types of communications that will be available in each of the above areas to communicate with the control room or the emergency shutdown panel during normal operation and accident conditions.

The communication system is designed for high reliability during normal and emergency operation of the plant within the plant and between the plant and other TVA facilities.

The communication system is not required to perform any safety function. Therefore, the operation of the communication system, except the portable radio system, cannot be ensured during and after a safe shutdown earthquake.

The system is designed to provide effective and diversified means of communication in all vital areas of the plant during the full spectrum of accident or incident conditions under the maximum potential noise levels. The various means of communications as described in PSAR Section 9.11 complement one another. Should for some reason one or more communication means be unavailable, diverse means should continue to be available.

The portable radio units which will be handcarried by plant personnel will provide them with the capability to communicate among themselves on an alternate frequency in case of loss of base station, antenna, satellite receiver and transmitter of portable radio system.

The communication equipment located in Seismic Category I structures will be mounted on seismically qualified supports.

LEGEND

PA-IC	=	Public Address Intra-plant Communications System
PAX	=	Private Automatic Exchange (Telephone System)
MCJ	=	Maintenance Communication Jacking System (Sound Powered Communication System)
PRS	=	Portable Radio System
CB	=	Control Building
RSB	=	Reactor Service Building
RCB	=	Reactor Containment Building
SGB	=	Steam Generator Building
DGB	=	Diesel Generator Building
ECT	=	Emergency Cooling Towers
FPH	=	Fire Protection Pump House
CR	=	Control Room
RSP	=	Remote Shutdown Panel
HVAC	=	Heating, Ventilating, and Air Conditioning
USS	=	480V AC Unit Substation
MCC	=	Motor Control Center
AFW	=	Auxiliary Feedwater
SWGR	=	Medium Voltage Switchgear
SSPLS	=	Solid State Programmable Logic System
EI&C	=	Electrical Instrumentation & Control
EVST	=	Ex-vessel Storage Tank
EVSS	=	Ex-vessel Storage Subsystem
ABHX	=	Air Blast Heat Exchanger

TABLE 1 QCS430.27-1

X = AVAILABLE

AREA			TYPE OF COMMUNICATION FROM CR & RSP TO AREA			
BLDG.	CELL	CELL DESIGNATION	PA-IC	PAX	MCJ	PRS*
CB	410A	Control Room HVAC Cell	X		X	X
	410B	Control Room Filter Cell	X		X	X
	411A	Control Room HVAC Cell	X		X	X
	411B	Control Room Filter Cell	X		X	X
	412	Air Handling Unit Area	X	X	X	X
	413	Return Fan Area	X	X	X	X
	421	Security Room (Reserved)	X	X		X
	431	Main Control Room	X	X	X	X
	432	Computer Room	X	X	X	X
	446	USS and MCC Area	X	X	X	X
	451	125V Division 1 Battery Room	X		X	X
	453	250V Division 3 Battery Room	X		X	X
	454	Division 1 AC/DC Equipment Room	X		X	X
	455	Secondary Rod Control Room	X		X	X
	456	Prim. Rod Control MG Set Cell	X		X	X
	457	Prim. Rod Control Room	X		X	X
	458	125V Division 3 AC/DC Equipment Room	X		X	X
	459	Division 3 AC/DC Equipment Room	X	X	X	X
	460	Division 2 AC/DC Equipment Room	X	X	X	X

*Portable radios will be hand carried by plant personnel

Table 1
(Cont'd.)

X = AVAILABLE

AREA			TYPE OF COMMUNICATION FROM CR & RSP TO AREA			
BLDG.	CELL	CELL DESIGNATION	PA-IC	PAX	MCJ	PRS*
SGB	202	Auxiliary Bay Loop 1	X	X	X	X
	202A	Turbine AFW Pump			X	X
	202B	AFP Cooler Room			X	X
	204	Auxiliary Bay Loop2	X	X	X	X
	204A	AFW Pump A			X	X
	204B	AFW Pump B			X	X
	206	Auxiliary Bay Loop 3	X	X	X	X
	207	Steam Gen. Cell Loop 1	X		X	X
	208	Steam Gen. Cell Loop 2	X		X	X
	209	Steam Gen. Cell Loop 3	X		X	X
	215	SGAHRS PWST Room Auxiliary Bay	X		X	X
	216	Emer. Chiller Room Int. Bay	X		X	X
	217	Emer. Chiller Room Int. Bay	X		X	X
	221	Auxiliary Bay Loop 1	X	X	X	X
	222	Auxiliary Bay Loop 2	X		X	X
	223	Auxiliary Bay Loop 3	X	X	X	X
	241	Auxiliary Bay Loop 1	X	X	X	X
	242	Auxiliary Bay Loop 2	X	X	X	X
	243	Auxiliary Bay Loop 3	X	X	X	X
	244	Steam Gen. Cell Loop 1	X		X	X
	245	Steam Gen. Cell Loop 2	X		X	X
	246	Steam Gen. Cell Loop 3	X		X	X
	247	Intermediate Bay West	X	X	X	X

Table 1
(Cont'd.)

X = AVAILABLE

AREA			TYPE OF COMMUNICATION FROM CR & RSP TO AREA			
BLDG.	CELL	CELL DESIGNATION	PA-IC	PAX	MCJ	PRS*
SGB	253	Intermediate Bay East	X		X	X
	262	Intermediate Bay Floor El. 816'-0"	X	X	X	X
	271	Intermediate Bay Floor El. 836'-0"	X	X	X	X
	272A	Remote Shutdown Cell A	X	X	X	X
	272B	Remote Shutdown Cell B	X	X	X	X
	272C	Remote Shutdown Cell C	X	X	X	X
	273	Motor Control Center Division 3 Cell	X		X	X
	281	Auxiliary Bay Loop 1	X	X	X	X
	282	Auxiliary Bay Loop 2	X		X	X
	283	Auxiliary Bay Loop 3	X	X	X	X

Table 1
(Cont'd.)

X = AVAILABLE

AREA			TYPE OF COMMUNICATION FROM CR & RSP TO AREA			
BLDG.	CELL	CELL DESIGNATION	PA-IC	PAX	MCJ	PRS*
EEB	521	SWGR Bus and USS Cell	X	X	X	X
	524	SWGR Bus and USS Cell	X	X	X	X
	525	Fire Pump Area	X		X	X
	541	Fire Pump Area	X		X	X

Table 1
(Cont'd.)

X = AVAILABLE

AREA			TYPE OF COMMUNICATION FROM CR & RSP TO AREA			
BLDG.	CELL	CELL DESIGNATION	PA-IC	PAX	MCJ	PRS*
DGB		Diesel Generator A and Auxiliaries	X	X	X	X
		Diesel Generator B and Auxiliaries	X	X	X	X
		Diesel Generator C and Auxiliaries	X	X	X	X
		DG A HVAC Equipment Room	X	X	X	X
		DG B HVAC Equipment Room	X	X	X	X
		DB C HVAC Equipment Room	X	X	X	X

Table 1
(Cont'd.)

X = AVAILABLE

AREA			TYPE OF COMMUNICATION FROM CR & RSP TO AREA			
BLDG.	CELL	CELL DESIGNATION	PA-IC	PAX	MCJ	PRS*
RCB	151	Head Access Area	X	X	X	X
	161A	Operating Floor	X	X	X	X
	163	EI&C Cubicle	X	X	X	X
	165	EI&C Cubicle	X	X	X	X
	167	EI&C Cubicle	X	X	X	X
	169A	Annulus Above Operating Floor			X	X
	105F	Makeup Pump & Valve Cell	X	X	X	X
	105G	Personnel & Equipment Access	X		X	X
	105H	Corridor & Valve Gallery	X	X	X	X
	105Z	Makeup Pump Cooler Cell			X	X

Table 1
(Cont'd.)

X = AVAILABLE

AREA			TYPE OF COMMUNICATION FROM CR & RSP TO AREA			
BLDG.	CELL	CELL DESIGNATION	PA-IC	PAX	MCJ	PRS*
RSB	305B	El. 733' Access Area	X		X	X
	305E	USS Cell	X		X	X
	305F	USS Cell	X		X	X
	305G	Heat Exchanger Cell	X		X	X
	305I	Heat Exchanger Cell	X		X	X
	306A	El. 755' Access Area	X	X	X	X
	306B	El. 755' Access Area	X		X	X
	307A	El. 779' Access Area	X	X	X	X
	307B	El. 779' Access Area	X		X	X
	308B	RSB Operating Floor	X	X	X	X
	309	MCC Area	X	X	X	X
	311	Refueling Communication Center	X	X	X	X
	314	Instrumentation Area	X		X	X
	325	EVSS Pump & Pipeways Cooler			X	X
	326	ABHX Cell Unit Cooler	X	X		X
	327	ABHX Cell Unit Cooler	X		X	X
	347	Containment Clean-up Filter Cell	X		X	X
	347A	Radiation Monitor Cell			X	X
	348	Containment Clean-up Chase			X	X
	349	Containment Clean-up Chase			X	X
	352A	EVST, ABHX Loop A Cell	X		X	X
	353A	EVST, ABHX Loop B Cell	X		X	X

Table 1
(Cont'd.)

X = AVAILABLE

AREA			TYPE OF COMMUNICATION FROM CR & RSP TO AREA			
BLDG.	CELL	CELL DESIGNATION	PA-IC	PAX	MCJ	PRS*
RSB	359	Containment Clean-up Scrubber & Washer Cell	X		X	X
	391	Containment Clean-up Filter Cell	X		X	X
	395	RCB Annulus Filter Unit Cell	X		X	X
	398	RCB Annulus Filter Unit Cell	X		X	X

Table 1
(Cont'd.)

X = AVAILABLE

AREA			TYPE OF COMMUNICATION FROM CR & RSP TO AREA			
BLDG.	CELL	CELL DESIGNATION	PA-IC	PAX	MCJ	PRS*
ECT	121	Division 1 MCC Area	X	X	X	X
	122	Division 2 MCC Area	X	X	X	X

Question CS430.28 (9.11)

The final design of the onsite communications systems will be reviewed with regard to functional capability of all normal operating and accident conditions. Therefore, the PSAR should be expanded, to the extent practicable, to include the following:

a) A list of all working stations including locations and the type of communication system(s) provided at each location.

b) The maximum sound levels that will exist at each of the above identified working stations for all transient accident conditions.

c) The maximum background noise level that will exist at each working station during normal operation and accident condition and yet reliably expect effective communication with the control room using the communication system(s) available at that station.

d) Communication systems performance requirements and test procedures (including frequency) which will be imposed to ensure that effective communication with the control room or emergency shutdown panel is possible under all conditions.

e) A discussion of protective measures to be taken to ensure functional onsite communication systems, including considerations for component failure, loss of power, and severing of a communication line or trunk as a result of an accident or fire.

Response

a) The response to question CS430.27 provides a list of communications system locations.

b) The maximum sound level (noise) that will exist at each of the working stations identified in item (a) above for all transient accident conditions will be within the sound levels as shown under item (c) below.

The sound levels of the PA-IC speakers will be adjusted 5 db above the maximum background noise level.

c) The maximum background noise levels that will exist at each working station during normal operation and accident conditions is not determined at this time and will be included in FSAR. However, the maximum expected noise level in each area is given below.

Building	Area	Maximum Expected Noise Level (db)
Reactor Service Building	General Areas	90
	ABHX Unit Cooler Cell	95
	Containment Cleanup Scrubber and Washer Cell	95
Steam Generator Building	General Areas	90
	Emer. Chiller Room	95
	Auxiliary Bays	95
Control Building	General Areas	85
	HVAC Cell	100
	Equipment Rooms	90
Diesel Generator Building	General Areas	90
Turbine Generator Building & Other Balance of Plant Buildings	General Areas	90

The working stations for communication systems will be located to provide voice communication between two or more locations in the plant, even in areas of extreme noise levels. In the areas of high ambient noise (> 90 dbA) supplementary red flashing indicating lights are provided at a visible location above the working station to draw the attention of the operating personnel for an incoming call. The handsets will be located in sound absorbing booths in high noise areas. Headsets are provided for use at the maintenance communication jacking stations throughout the plant.

Tests will be made to determine ambient noise levels in all plant areas in order to verify the communication system design and to make any system adjustments, if required.

d) Communication systems performance requirements and test procedures (including frequency of testing) which will be imposed to ensure that effective communication with the control room or emergency shutdown panels is possible under all conditions will be included in the Plant Communication System test procedures and in the FSAR.

e) The following protective measures are taken to ensure functional onsite communication systems:

1. Diverse and redundant means of communication systems are used to ensure reliable and effective means of communication both intra-plant and external to the plant for all modes of plant operation including emergency conditions.

2. The communication subsystems are designed such that the failure of the power supply or the component of a subsystem or a communication loop, will not impair the operation of other subsystems or other communication loops of the subsystem. The power supplies are designed such that the complete Public Address Intra-plant Communication system is not lost in any area of the plant due to a single failure of the equipment or the power supply circuit.

3. The communication subsystems (except the maintenance communication jacking (MCJ System)) are powered from the non-Class 1E uninterruptible power supplies (UPS). The MCJ system is sound powered and requires no power for its operation.

4. Communication equipment location in the Reactor Containment Building are connected to their communications subsystem through a number of independent electrical containment penetrations. The failure of a penetration due to a single localized accident will not cause failure of the remaining communication subsystem(s) in the Reactor Containment Building.

5. The maintenance communication jacking (MCJ) sound powered system provides six independent and separate sound-powered telephone communication loops with three circuits each for communications between the ControlRoom and the different plant buildings. All of the five Nuclear Island Building sound powered loops are available for communication use between the remote shutdown panel and the Nuclear Island Buildings for supporting remote plant shutdown.

6. The communication equipment located in Seismic Category I structures will be mounted on seismically qualified supports.

Question CS430.29 (9.12)

Provide a tabulation of vital areas where emergency lighting is required for safe shutdown of the reactor and evacuation of personnel in the event of an accident.

Response

Emergency lighting for CRBRP is provided by the Standby Lighting System and the Emergency Lighting System as described in Sections 9.12.2 and 9.12.3 of the PSAR.

Table 430.29-1 tabulates areas of the plant where emergency lighting is utilized.

TABLE 430.29-1

LEGEND

ABHX	Air Blast Heat Exchanger
AFW	Auxiliary Feedwater
CB	Control Building
DGB	Diesel Generator Building
ECT	Emergency Cooling Tower
EEB	Electrical Equipment Building
EVSS	Exvessel Storage Subsystem
EVST	Ex-vessel Storage Tank
IB	Intermediate Bay
MG	Motor Generator
PWST	Protected Water Storage Tank
RCB	Reactor Containment building
RSB	Reactor Service Building
SGAHRS	Steam Generator Auxiliary Heat Removal System
SGB	Steam Generator Building

TABLE 430.29-1

BLDG.	CELL NO.	CELL DESIGNATION	REMARKS
RCB	105A	Corridor	
RCB	105D	Corridor	Access to 105F, G
RCB	105E	Personnel & Equipment Access	Access to 105F
RCB	105F	Makeup Pump & Valve Cell	Access to 105F
RCB	105G	Personnel & Equipment Access	
RCB	105H	Corridor & Valve Gallery	
RCB	105L	Cable Tray & Access Corridor	
RCB	105M	Corridor	
RCB	105T	Corridor	Access to 105Z
RCB	105Z	Makeup Pump Cooler Cell	Access to 105Z
RCB	109	Stairwell	
RCB	151	Head Access Area	Access to 105G, H, M
RCB	161A	RCB Main Operating Floor	
RCB	161C	PHTS Pump Motor Cavity	
RCB	161D	PHTS Pump Motor Cavity	
RCB	161E	PHTS Pump Motor Cavity	
RCB	163	I&C Cubicle	
RCB	165	I&C Cubicle	
RCB	167	I&C Cubicle	
SGB	201	Stairwell	
SGB	202	Auxiliary Bay Loop 1	Access to 202,241,281
SGB	202A	Turbine AFW Pump	
SGB	202B	AFW Pump Cooler Room	
SGB	204A	AFW Pump A	
SGB	204B	AFW Pump B	
SGB	206	Auxiliary Bay Loop 3	
SGB	207	Steam Generator Cell Loop 1	
SGB	208	Steam Generator Cell Loop 2	
SGB	209	Steam Generator Cell Loop 3	
SGB	210	Intermediate Bay	Access to 216,217

BLDG.	CELL NO.	CELL DESIGNATION	REMARKS
SGB	212	Stairwell	Access to 210,271
SGB	214	Stairwell	Access to 253,262,271
SGB	215	SGAHRS PWST Room	
SGB	216	Emergency Chiller Room	
SGB	217	Emergency Chiller Room	
SGB	221	Auxiliary Bay Loop 1	
SGB	222	Auxiliary Bay Loop 2	
SGB	223	Auxiliary Bay Loop 3	
SGB	233	Stairwell	Access to 247,262,271
SGB	241	Auxiliary Bay Loop 1	
SGB	242	Auxiliary Bay Loop 2	
SGB	243	Auxiliary Bay Loop 3	
SGB	244	Steam Generator Cell Loop 1	
SGB	245	Steam Generator Cell Loop 2	
SGB	246	Steam Generator Cell Loop 3	
SGB	247	Intermediate Bay West	
SGB	253	Intermediate Bay East	
SGB	262	IB Cell	
SGB	263	Protected Corridor	
SGB	271	IB Cell	
SGB	272A	Remote Shutdown Cell A	
SGB	272B	Remote Shutdown Cell B	
SGB	272C	Remote Shutdown Cell C	
SGB	273	Motor Control Center	
SGB	281	Auxiliary Bay Loop 1	
SGB	282	Auxiliary Bay Loop 2	
SGB	283	Auxiliary Bay Loop 3	
RSB	301	Stairwell	Access to 306,306A
RSB	303	Stairwell	Access to 311
RSB	304	Stairwell	Access to 305E, 347 305F, 349, 352A 359, 360
RSB	305A	El. 733' Access Area	Access to 305B

BLDG.	CELL NO.	CELL DESIGNATION	REMARKS
RSB	305B	El. 733' Access Area	
RSB	305E	Unit Substation Cell	
RSB	305F	Unit Substation Cell	
RSB	305G	Heat Exchanger Cell	
RSB	305H	RSB HVAC Equipment Room	Access to 305G, I
RSB	305I	Heat Exchanger Cell	
RSB	306A	El. 755' Access Area	
RSB	306B	El. 755' Access Area	
RSB	306D	El. 765' Access Area	Access to 350
RSB	307H	El. 788' Access Area	Access to 353A
RSB	308A	RSB Operating Floor	Access to 301,309, 324,326, 392
RSB	309	Motor Control Center	
RSB	311	Refueling Communication Center	
RSB	314	Instrumentation Area	Access to 341,349
RSB	325	EVS Pump & Pipeways Cooler Cell	
RSB	326	ABHX Cell Unit Cooler Cell	
RSB	327	ABHX Cell Unit Cooler Cell	
RSB	333	Stairwell	Access to 350,357
RSB	347	Containment Cleanup Filter Cell	
RSB	247A	Radiation Monitor Cell	
RSB	348	RCB Cleanup Chase	
RSB	349	RCB Cleanup Chase	
RSB	352A	EVST ABHX Loop A Cell	
RSB	353A	EVST ABHX Loop B Cell	
RSB	357	EVS Cooling Loop B Cell	
RSB	359	RCB Cleanup Scrubber & Washer Cell	
RSB	360	EVS Cooling Loop A Cell	
RSB	384	El. 755' Access Area	Access to 359
RSB	391	RCB Cleanup Filter Cell	
RSB	392	Access Area & Laydown Space	Access to 304,325, 327,391, 395,398
RSB	395	Annulus Filter Unit Cell	
RSB	398	Annulus Filter Unit Cell	

BLDG.	CELL NO.	CELL DESIGNATION	REMARKS
OB	410A	Control Room HVAC Cell	
OB	410B	Control Room Filter Cell	
OB	411A	Control Room HVAC Cell	
OB	411B	Control Room filter Cell	
OB	412	Air Handling Unit Area	
OB	413	Return Fan Area	
OB	416A	Airlock	Access to 410B
OB	416B	Airlock	Access to 410A
OB	417A	Airlock	Access to 411B
OB	417B	Airlock	Access to 411A
OB	421	Industrial Security System Cell	
OB	422	Technical Support Center	
OB	423	Tech. Support Center Conference Room	
OB	424	Stairwell	Access to 413, 446, 450, 467, 524
OB	431	Control Room	
OB	432	Computer Room	
OB	440	Corridor	Access to 432, 442 443, 448
OB	441	Corridor	Access to 440, 513
OB	442	Corridor	Access to 431, 440
OB	443	Stairwell	Access to 429, 440
OB	446	Unit Substation Area	
OB	448	Corridor	Access to 424, 431, 440
OB	450	Corridor	Access to 421, 422, 424

BLDG.	CELL NO.	CELL DESIGNATION	REMARKS
CB	451	Division 1 Battery Room	
CB	453	Division 3 Battery Room	
CB	454	Division 1 AC/DC Equipment Room	
CB	455	Secondary Rod Control Room	
CB	456	primary Rod Control MG Set Room	
CB	457	Primary Rod Control Room	
CB	458	Division 2 Battery Room	
CB	459	Division 3 AC/DC Equipment Room	
CB	460	Division 2 AC/DC Equipment room	
CB	467	Corridor	Access to 424,451, 453,454, 455,456, 457,458, 459,460
EEB	513	Equipment Removal Hatch Area & Corridor	Access to 441,263
EEB	521	Switchgear Bus & USS Cell	
EEB	524	Switchgear Bus & USS Cell	
EEB	525	Equipent Removal Hatch Area	
EEB	540	Switchgear Bus Area	Access to 541
EEB	541	Equipment Removal Hatch Area	
EEB	542	Primary Sodium Pump MG Set Room	Access to 543
EEB	543	Intermediate Sodium Pump MG Set Room	Access to 540
DGB		Diesel Generator A and Auxiliaries	
DGB		Diesel Generator B and Auxiliaries	
DGB		Diesel Generator	
DGB		DG A HVAC Equipment Room	
DGB		DG B HVAC Equipment Room	
DGB		DG C HVAC Equipment Room	
DGB		DG A Filter Bank	
DGB		DG B Filter Bank	
DGB		DG C Filter Bank	
DGB		Passageway to DG A HVAC Equipment	
DGB		Passageway to DG B HVAC Equipment	
DGB		Passageway to DG C HVAC Equipment	
ECT		Emergency Cooling Tower Pumphouse A	
ECT		Emergency Cooling Tower Pumphouse B	

Question CS430.30 (9.12)

Identify the types of lighting that will be provided in the above tabulated vital areas. Show that lighting will be available in the event of a design basis accident, including the safe shutdown earthquake.

Response:

The CRBRP Lighting System provides normal, standby and emergency lighting as described in Section 9.12 of the PSAR. The Normal Lighting System provides illumination under all normal plant operating conditions with power available from the Plant, Preferred, or Reserve power supply systems. The Standby Lighting System provides adequate illumination under all normal and emergency plant operating conditions with power available from the Plant, Preferred, Reserve or Class 1E Onsite AC Power System. Under an emergency condition, resulting in loss of all offsite power sources, the standby lighting system will be powered from the Class 1E onsite AC power system (Emergency Diesel Generators). Both Normal and Standby Lighting Systems utilize high pressure sodium and fluorescent light fixtures. The Emergency Lighting System provides adequate illumination at points of egress, in the Control Room, at remote shutdown locations and at all locations required for access to safety-related equipment. The Emergency Lighting System utilizes self-contained individual eight (8) hour rated battery powered units with sealed beam lamps and self-contained eight (8) hour rated battery powered exit signs.

All lighting fixtures in Nuclear Island buildings are seismically qualified to maintain structural integrity in accordance with IEEE Std. 344-1975. The lighting fixtures and raceways are supported to meet Seismic Category 1 requirements as described in Sections 3.7.2 and 3.7.3 of the PSAR.

The Standby Lighting System is classified as 1E up to and including the lighting panel. The circuits to the Standby Lighting System light fixtures are also 1E and are routed to maintain required separation from non-Class 1E or Class 1E cables of other Divisions as described in Section 8.3.1.2 of the PSAR. However, the lighting fixtures are non-Class 1E and as such these circuits from the lighting panels to the lighting fixtures of the standby lighting system are considered associated 1E.

PSAR Section 9.12 has been revised to reflect the above.

Question CS430.31 (9.12)

For all vital areas identified, indicate that illumination levels during accident conditions will be adequate for performance of any tasks associated with safe shutdown of the reactor, and for maintaining the reactor in a safe shutdown condition. Demonstrate that sufficient lighting will be available in the vital areas in the event of a prolonged loss of offsite power illumination levels should be in conformance with applicable sections of the Illumination Engineering Society (IES) Lighting Handbook.

Response:

The Normal Lighting System provides illumination to the level recommended by the IES Handbook. Where illumination is required for operation or maintenance of safety-related equipment, the Standby Lighting System receives power from the Emergency Diesel Generator and provides an average illumination of twenty (20) foot candles. During loss of offsite power, access routes to areas containing safety-related equipment are illuminated by the Standby Lighting System to a level of three (3) foot candles. The Emergency Lighting System provides one foot candle illumination, per NFPA 101, Section 5-8, and IES recommendation, in all egress routes and where access is required for fire fighting in areas containing safety related equipment. The emergency lighting system utilizes self-contained individual eight (8) hour rated battery powered units with sealed beam lamps and self-contained eight(8) hour rated battery powered exit signs for a period of 8 hours, per Branch Technical Position CMEB 9.5-1, paragraph 5g. Lighting in the Control Room at all operator work stations will be powered from the plant Class 1E uninterruptible power supply (UPS) system and will provide an illumination of minimum 10 foot candles in accordance with the requirements of Section 6.1.5.4 of NUREG 0700 during loss of all offsite power.

QCS430.32 (9.14.1)

Provide a general arrangement drawing for the Emergency Diesel Generator Fuel Oil Storage and Transfer System. Show storage tank locations and piping runs in relation to the diesel generator building and any other structures in the vicinity. Include section views, as necessary, for clarity.

Response

The general arrangement and piping drawings will be developed on the basis of the design bases and system description provided with the responses to Question 430.25. The development of the general arrangement and piping drawings is in process and will be provided in a later revision of the PSAR.

Question CS430.33 (9.14.1)

Describe the instruments, controls, sensors and alarms provided for monitoring the diesel engine fuel oil storage and transfer system, and describe their function. Identify the temperature, pressure, and level sensors which alert the operator when these parameters are exceeded, and state where the alarms are annunciated. Discuss the system interlocks provided, to the extent practical.

Provide a discussion of the testing and maintenance program which will be implemented to ensure a highly reliable instrumentation, controls, sensors, and alarm system.

Response

The emergency diesel engine fuel oil storage and transfer system will provide sensors and alarms to monitor and control the fuel oil parameters for all three diesel generators. Monitoring and control of the Diesel Generator 7-day storage tank assemblies will be provided by the following sensors:

1. Low-low storage tank level.
2. High-high storage tank level.
3. High/low storage tank level.
4. Storage tank level transmitter.

The low/low and high/high tank level switches will annunciate alarms locally at the diesel engine control panel and actuate the diesel generator trouble alarm in the control room. The high/low level switches will provide interlocks to automatically start and stop the fuel oil transfer pumps. The storage tank level transmitter will provide level indication locally.

A Seismic Category I truck fill connection, condensate sump, and inspection-dipstick gauge manholes will be provided for each embedded 7-day storage tank assembly.

For the Diesel Generators electric motor driven fuel oil transfer pumps will be provided to transfer fuel from the embedded 7-day storage tank assembly to the day tank. Each of these pumps will be independently capable of supplying fuel to the day tank.

The following level instrumentation and controls will be provided for each day tank and associated transfer pumps:

1. High/high level alarm.

2. High level switch to automatically stop the fuel oil transfer pump.

3. Low level switch to automatically start the primary fuel oil transfer pump.

4. Low/low level switch to automatically start the standby fuel oil transfer pump and for alarm.

A selector switch will be provided on the engine control cabinet which will allow the operator to administratively select the primary pump. The high/high and low/low alarms will annunciate both locally and actuate the Diesel Generator trouble alarm in the Control Room. A local level meter will be provided to indicate day tank level.

From the day tank fuel will be supplied to the diesel injectors by a shaft driven pump. An electric motor-driven fuel pump will be provided as a backup for the engine driven fuel pump. Separate suction and discharge lines will serve each pump. Each pump will have a suction duplex strainer and discharges to a duplex filter downstream from the discharge junction. Pressure indication will be provided on the suction and discharge of each fuel pump and a high fuel oil filter differential pressure alarm is provided locally and actuates a Diesel Generator trouble alarm in the Control Room.

Fuel oil pressure will be monitored just upstream of engine injectors. Low fuel oil pressure will be indicated on the diesel engine control panel.

Periodic testing will be performed on the Diesel Generators to demonstrate that the units are operational as described in Section 8.3.1.1.1 of the PSAR. Portions of these surveillance requirements include:

- Verify the proper fuel oil levels in the day tank

- Verify the proper fuel oil level in the 7-day storage tanks

- Verify the fuel oil transfer pump can be started and that it can transfer fuel from the storage system to the day tank

- Verify the diesel starts and accelerates from standby condition to rated speed in 10 seconds

In addition, testing and maintenance of all fuel oil instruments will be performed in accordance with the scheduled maintenance and calibration program for the Clinch River Plant.

Question CS430.34 (9.14.1)

Provide a discussion of the design provisions which will be used to protect the fuel oil storage tank fill and vent lines from damage by tornado missiles.

Response

The Fuel Oil Storage and Transfer System storage tank vent and fill lines will be protected from tornado damage by the application of:

- o appropriate thickness earth cover or
- o concrete tornado missile shielding or
- o the combination of the two methods described above.

The tornado missile protection will be in accordance with the requirements of SRP 3.3.2 "Tornado Loading and SRP 3.5.3 "Barrier Design Procedures".

Question CS430.35 (9.14.1)

Expand the PSAR to include a discussion of the fuel oil storage tank and how your design will conform to the requirements of ANSI N-195 and R.G. 1.137. Provide specific information on:

1. The method to be used in calculating the capacity of the fuel oil storage tanks.

2. The types of coatings or coating systems to be used to prevent internal and external corrosion of the fuel oil storage tanks and underground piping.

3. A discussion of the cathodic protection system which will be applied to the fuel oil storage tanks, or the rationale of why cathodic protection will not be used.

Response

The calculation of the storage tank capacity is based on the requirements of Regulatory Guide 1.137, utilizing the continuous seven (7) day operating method at full loaded capacity of the diesel engines.

The internal and external coating system for the storage tanks will meet the ANSI N-195 requirements.

The cathodic protection system design is pending completion of the site survey for cathodic protection. The final cathodic protection design for the storage tanks will be in accordance with ANSI N-195.

The next update of Chapter 9.14 of the PSAR will include the applicable description of how the fuel oil storage tank design meets the requirements of ANSI N-195 and Regulatory guide 1.137.

Question CS430.36 (9.14.1)

Expand the PSAR to include a discussion of the following:

1. The means for detecting or preventing growth of algae in the diesel fuel oil storage tanks. If it were detected, describe the methods which will be employed for cleaning the affected tank(s).

2. The method(s) to be employed for removal of water from the diesel fuel oil storage tanks and the day tanks, should water accumulate in either tank.

3. The provisions to be made to prevent the entrance of deliterious material into the diesel fuel oil storage tanks during filling, and as a consequence of adverse environmental conditions.

Response

The procedures for the maintenance of the diesel fuel oil quality will be in accordance with Regulatory guide 1.137 and ANSI N195, specifically:

1. The fuel oil storage tank will be sampled and tested monthly. The test will include check for biological growth. If biological growth is found, a biocide will be used to controlit, based on the recommendation of the fuel supplier and diesel manufacturer.

2. The monthly fuel oil storage tank sample will be checked for presence of water. If water accumulation is detected, it will be pumped out. The tanks will be slightly sloped toward the pump out connection to facilitate the water removal.

3. A procedure will be established to sample and test all new fuel oil deliveries prior to entering the fuel oil into the storage tank. The same procedure will provide instructions how to avoid entrance of deliterious material into the fuel oil storage tank during filling and it will specify the use of filters during filling operations.

Question CS430.37 (9.14.1)

Assume an unlikely event has occurred requiring operation of a diesel generator for a prolonged period that would require replenishment of fuel oil without interrupting operation of the diesel generator. What provision will be made in the design of the fuel oil storage fill system to minimize the creation of turbulence of the sediment in the bottom of the storage tank. Stirring of this sediment during addition of new fuel has the potential of causing the overall quality of the fuel to become unacceptable and could potentially lead to the degradation or failure of the diesel generator.

Response

A filter will be provided on the fill lines to the diesel oil storage tanks. The filters will be rated 5 micron, 98% removal.

Minimization of turbulence in the tanks will be accomplished by providing a flow distributor inside each tank on the fill line. This flow distributor will consist of a section of pipe capped at the end, projecting approximately 12 inches into the tank, and containing a multiple number of holes. The flow distributor will act to minimize turbulence by distributing the flow of new fuel oil over a large surface area in the tank.

Question CS430.38 (9.14.1)

In the PSAR, you state that fuel can be delivered to the site within 24 hours. Expand your PSAR to include a discussion of how the fuel will be delivered, both in normal operations and in the event of extremely unfavorable environmental conditions. In your discussion, include the sources where quality diesel fuel is available and the distances to be traveled from the source to the site, to the extent practical.

Response:

The principle fuel oil distributor utilized by TVA has many local outlets within 100 miles of the site. Fuel oil will be purchased and allocated one year in advance of delivery; however, fuel oil is available on an emergency basis from numerous other suppliers. The list of suppliers is attached herewith.

Access to the site under extremely unfavorable environmental conditions, such as flooding, is available by several alternate paths.

Other extremely unfavorable environmental conditions, such as tornados, would not be long lasting and any necessary access routes could be opened in a short period of time. Onsite diesel oil storage is sufficient to allow operation of each diesel generator for a week. This is more than adequate time to replenish the diesel oil supply under the most unfavorable environmental conditions.

FUEL OIL SUPPLIERS

Ashland Chemical Co.
P.O. Box 2271
Knoxville, TN 37901

Express Marketing Int'l. (ENI)
4420 Bonny Oaks Drive
Chattanooga, TN 37416

Tri County Oil Company
P.O. Box 12237
Knoxville, TN 37912

Morton Oil Company
P.O. Box 1130
Maryville, TN 37801

Midtown Oil Company
P.O. Box 205
Kingston, TN 37763

Prater Oil Company
P.O. Box 1334
Morristown, TN 37814

Southern Oil Service
P.O. Box 1104
Chattanooga, TN 37404

Benton Oil Service, Inc.
4831 Bonny Oaks Drive
Chattanooga, TN 37416

General Oil Company
P.O. Box 68
Chattanooga, TN 37401

Kelso Oil Company
641 Atlanta Avenue
Knoxville, TN 37917

Harriman Oil Company
P.O. Box 262
Harriman, TN 37748

Pettway Oil Company
3324 Alton Park Blvd.
Chattanooga, TN 37410

Ace Oil Company
P.O. Box 5253
Chattanooga, TN 37406

Question CS430.39 (9.14.1)

Discuss the design considerations that will determine the physical location of the diesel engine fuel oil day tank(s) at your facility. Assure that the proposed physical location of the fuel oil day tank(s) meet(s) the requirements of the diesel engine manufacturers.

Response:

The diesel engine fuel oil day tanks will be located in the Diesel Generator Building. For each diesel generator room, a separate day tank room will be provided with 3 hour rated fire enclosures, in accordance with the BTP CSMB 9.5-1 requirements. The elevation of the day tanks will assure slight positive pressure at the engine driven fuel oil pumps. The actual elevation of the day tanks will be established on the basis of the diesel engine manufacturers' recommendation.

Question CS430.40 (9.14.1)

What is the purpose of the standby motor driven fuel oil pump shown of Figure 9.14.7? Expand the PSAR to include a description of this pump, its function, the pump control scheme, and the source of electrical power for the motor.

Response

The standby motor driven fuel oil pump shown on Figure 9.14.7 is indicated to provide fuel oil supply during the engine starting cycle. This pump will be provided with a battery power supply and will be arranged to operate when the engine receives a start signal and it will operate until the system fuel oil pressure is established by the engine driven fuel oil pump. The actual use for this booster pump is dependent on the design of the selected vendor. The PSAR will be revised upon the receipt of the actual vendor design.

Question CS430.41 (9.14.1)

What is the source of electrical power for the diesel fuel oil transfer pumps? Also, provide the salient pump characteristics; i.e., capacity, discharge head, NPSH requirements, and motor HP; to the extent possible.

Response

The electrical power for each diesel fuel oil transfer pump is provided from the same diesel generator for which the fuel oil transfer pump provides service. The transfer pump will be designed to provide fuel supply in excess of the maximum diesel engine consumption by a factor of 3 or more. The specific pump characteriestics are not available at this time and will be provided in the FSAR.

Question CS430.42 (9.14.1)

Discuss the precautionary measures that will be taken to assure the quality and reliability of the fuel oil supply for emergency diesel generator operation. Include the type of fuel oil, impurity and quality limitation as well as diesel index number or its equivalent, cloud point, entrained moisture, sulfur, particulates and other deliterious insoluble substances; procedure for testing newly delivered fuel, periodic sampling and testing of on-site fuel oil (including interval between tests), interval of time between periodic removal of condensate from fuel tanks and periodic system inspection. In your discussion include reference to industry (or other) standard which will be followed to assure a reliable fuel oil supply to the emergency generators.

Response

The procedure for assurance of the quality and reliability of the fuel oil supply has not been finalized. The procedure will be completed in accordance with Reg. Guide 1.137, ANSI N195 and SRP 9.5.4. Chapter 9.14 of PSAR will be extended to include the procedural requirements relating to assurance of the fuel oil quality and reliability following the completion of the operating procedures.

Question CS430.43 (9.14.1)

Discuss what precautions have been taken in the design of the fuel oil system in locating the fuel oil day tank and connecting fuel oil piping in the diesel generator room with regard to possible exposure to ignition sources such as open flames and hot surfaces.

Response:

The diesel generator day tanks will be enclosed in rooms with 3-hour fire barriers separate from the diesel generators. Each day tank room will be served by a sprinkler system that is automatically actuated in the event of fire. A curb will be provided under the tanks to contain any oil spillage. Except where the fuel oil piping connects to the tanks and diesels, all fuel oil supply lines will be embedded in the floor surrounding the diesel generator. There are no ignition sources or hot surfaces, which can affect the fuel oil piping.

Question CS430.44 (9.14.1)

What is the purpose of the piping run identified as 3-HBDW-D6B on Figure 9.14.1? Also, what is the actual location of line 2-HBCW-D4 on Figure 9.14.1; i.e., inside or outside the diesel generator building?

Response

The pipe lines 6A and 6B are connected to the fuel oil transfer pump discharge line and they transfer fuel oil from the storage tank to an outdoor hose connection for the purpose of the storage tank cleaning. The pipe line D4 and the fuel oil transfer pumps will be located inside the Diesel Generator Building.

Question CS430.45 (9.14)

Diesel generator auxiliary systems should be designed to Seismic Category 2, ASME Section III, Class 3, or Quality Group C requirement in conformance with Regulatory Guides 1.26 and 1.29. Expand your PSAR to include a discussion of the engine mounted fuel oil piping and components, and provide the industry standards that were used in the design, manufacturing, and inspection of the piping and components. Also, show on the appropriate drawings where the Quality Group Classification changes from Quality Group C.

Provide similar discussions and drawings for the other diesel generator auxiliary systems, i.e., lubricating oil, cooling water, air starting, and combustion air intake and exhaust systems, to the extent practical.

Response:

The diesel engine and all casted diesel vendor supplied components, including the fuel oil filters, will be designed in accordance with ANSI N-195 and B31.1 requirements. All other piping and components will be designed to ASME Section III, Class 3, Quality Group C requirements per the requirements of Regulatory Guides 1.26 and 1.29. The specific interface boundaries between the various code and quality components will be identified in future P&ID revisions.

Question CS430.46 (9.14)

Identify all high and moderate energy lines and systems that will be installed in the diesel generator room. Discuss the measures that will be taken in the design of the diesel generator facility to protect the safety related systems, piping and components from the effects of high and moderate energy line failure to assure availability of the diesel generators when needed.

Response:

The only high energy line in the diesel generator room will be the diesel exhaust pipe, which is seismically qualified and provided with expansion joints to accommodate thermal growth to 950 F. The line will be provided with 8-inch thick, ceramic, fibrous blanket type insulation. The blankets will be 1-inch thick and have staggered joints. Stainless steel jacketing will be provided.

The moderate energy lines will be the emergency service water lines, which provide cooling water to the diesel engine, the starting air (250 psig) piping between the accumulators and the engine/generator skid and the diesel oil lines connected to the diesel engine. These moderate energy lines are also seismically qualified.

The diesel generator rooms will be provided with a drainage system to prevent accumulation of water in case of a pipe break. All high and moderate energy piping will be analyzed in accordance with BTP ASB 3-1 and MEB 3-1. If needed, spray shields will be provided to prevent direct water impingement on the diesel generator or on any electrical components.

NRC Question CS430.47 (9.14)

The diesel generator structures are designed to seismic and tornado criteria and are isolated from one another by a reinforced concrete wall barrier. Describe the barrier (including openings) in more detail and, its capability to withstand the effects of internally generated missiles resulting from a crankcase explosion, failure of supports for one or all of the starting air receivers, or failure of any high or moderate energy line and initial flooding from the cooling system so that the assumed effects will not result in loss of an additional generator.

Response:

The three emergency diesel generators will be located in separate diesel generator rooms of a seismic Category I building. This building is being designed as discussed below.

The assumed effects from the events described will not result in loss of an additional generator due to the design as described below. The Diesel Generator Building is designed to provide complete separation between the independent divisions. This is accomplished by providing completely separate bays for housing the redundant diesel generators, diesel auxiliaries, and cell cooling equipment. Each bay is separated by a concrete wall barrier with no openings. Separate outside access is provided to each bay.

The separation walls are sized to withstand the worst case internally generated missile within each bay without resulting in concrete spalling. These evaluations are performed using criteria such as the modified Petry, the modified NDRS formulas and the equivalent static load formula from the paper by R. A. Williamson and R. R. Alvy, November, 1973 (Reference 7, PSAR Section 3.5). See PSAR Section 3.5.4 for additional details on the calculation methods outlined above.

Failure of the structural supports for the starting air receivers is precluded by designing as Seismic Category I supports.

Equipment housed in each of the diesel generator bays are mounted on concrete pads to prevent failure of essential equipment in the event of the worst case internal flooding condition. Since no openings are provided between independent bays, propagation of internal flooding accidents to an adjacent bay is prevented.

Question CS430.48 (9.14)

Expand the PSAR to include a discussion of non-seismic systems or structures in the diesel generator building or near the fuel oil storage tanks and piping. Show that the failure of any non-seismic system or structures will not result in damage to any of the diesel generator auxiliary system with the attendant loss of its respective diesel generator.

Response:

The Diesel Generator Building will be located far away from the non-seismic category structures, such that failure of the non-seismic structures will not result in damage to any of the diesel generator auxiliary systems. The non-seismic category components located in the diesel rooms will be supported and/or restrainted in such way that their failure will not affect the safety related components.

Question CS430.49 (9.14.2)

Expand your PSAR to include a section on how the diesel generator cooling water system design conforms to the design criteria and bases detailed in SRP 9.5.5 (NUREG-0800). Provide justification for non-conformance, as applicable.

Response:

The updated PSAR Chapter 9.14.2 "Diesel Generator Cooling Water System" provides the description of the design basis demonstrating that the system design criteria are in accordance with SRP 9.5.5.

Question CS430.50 (9.14.2)

Describe the instrumentation, controls, and sensors and alarms provided for monitoring of the diesel engine cooling water system and describe their function. Discuss the testing necessary to maintain and assure a highly reliable instrumentation, controls, sensors, and alarm system, and where the alarms are annunciated. Identify the temperature, pressure, level, and flow (where applicable) sensors which alert the operator when these parameters exceed the ranges recommended by the engine manufacturer and describe what operator actions are required during alarm conditions to prevent harmful effects to the diesel engine. Discuss the systems interlocks provided, to the extent practical.

Response

The emergency diesel engine cooling (jacket) water sensors and alarms for all three diesel generators will be provided for control of the diesel engine jacket cooling water parameters during normal operation and standby mode. These sensors and alarms will consist of the following:

1. High jacket water temperature.

2. Low jacket water temperature.

3. Low jacket water pressure.

4. Low jacket water expansion tank level.

All of the above jacket water sensors will actuate an alarm locally on the diesel engine control panel. High jacket water temperature will actuate an individual alarm in the control room. All other sensors will actuate the diesel generator trouble alarm in the control room. The high jacket water temperature will effect a trip of the diesel engine in the test mode. However, if the diesel engine is operating in the emergency mode the trip function will be bypassed. Refer to Question/Response 430.26.

A thermostatically controlled jacket water immersion heater and an electric motor drive keepwarm pump will be provided for each engine to maintain the recommended jacket water standby temperature to allow immediate starting at the minimum ambient temperature.

Periodically, during shutdown, a simulated loss of offsite power test will be conducted. A portion of this test will be to verify the Diesel Generator jacket cooling water system trips are bypassed during the emergency mode of operation. In addition, the testing and maintenance of all the jacket cooling water instrumentation will be performed in accordance with the scheduled maintenance and calibration program for the Clinch River Plant.

Question CS430.51 (9.14.2)

Provide a more complete description of how the diesel generator cooling water system functions. Include a description of all components that make up, or interface with the cooling water system, and describe their function. Show how cooling water temperature is maintained at a predetermined level during operation in any condition from no load to maximum load. Include seismic and quality group classifications.

Response:

The updated PSAR Chapter 9.14.2 "Diesel Generator Cooling Water System" includes the available information for the diesel generators.

Question CS430.52 (9.14.2)

In PSAR sections 9.14.2.2 d and e, you discuss the diesel engine jacket water "keepwarm" system for use when the engine is not running. The information presented in these PSAR sections and on Figure 9.14-2 is not sufficient for a comprehensive review of the system design and function. Therefore, expand your PSAR to include a complete description of the cooling water system design and functions with respect to the "keepwarm" or standby mode of operation. Show that the entire cooling water system is maintained at 125°F. Include details of the circulating pump, electric heater, source of power, flow path, and controls scheme. Revise Figure 9.14-2, as required. In the event of a failure in this system, describe how the failure will be detected, and what actions must be taken by the operator(s) to insure that diesel engine standby temperatures are maintained. Provide seismic and quality group classifications for this system.

Response:

The updated PSAR Chapter 9.14.2 "Diesel Generator Cooling Water System" includes the available information for the jacket water keep warm system of the diesel generators.

Question CS430.53 (9.14.2)

A three-way, air operated temperature control valve is shown on Figure 9.14-8. Provide more detail on this valve and how it operates. Describe the control air system, including the air supply, how the pressure is regulated, consequences of a malfunction resulting in either too high or too low pressure, provisions for manual override, if any, alarms and indictions, and any other pertinent data, to the extent practical.

Response:

The air operated temperature control valve shown on Figure 9.14-8 was based on another engine manufacturer. For CRBRP design, there shall be no control air system for controlling diesel auxiliary systems.

The updated PSAR Chapter 9.14.2 "Diesel Generator Cooling Water System" provides the design of the three-way control valve.

Question CS430.54 (9.14.2)

Indicate the measures to preclude long-term corrosion and organic fouling in the diesel engine cooling water system that would degrade system cooling performance, and the compatibility of any corrosion inhibitors or antifreeze compounds used with the materials of the system. Indicate if the water chemistry is in conformance with the engine manufacturer's recommendations, or the plan to verify conformance.

Response:

The updated PSAR chapter 9.14. 2 "Diesel Generator Cooling Water System" provides the available information for the diesel generators.

The jacket water will be sampled and analyzed periodically in accordance with the diesel engine maintenance schedule. Based on the result of the sampling analysis, a corrosion inhibitor will be added to the jacket water. The applied corrosion inhibitor will be selected on the basis of the diesel Manufacturers' recommendation. Provisions are existing in the design of the diesel engine jacket water systems to permit the addition of the chemical treatment material.

Question CS430.55 (9.14.2)

Describe the provisions made in the design of the diesel engine cooling water system to assure that all components and piping are filled with water.

Response:

The updated PSAR Chapter 9.14.2 "Diesel Generator Cooling Water System" includes the available information for the diesel generators. For all three diesel engines, the highest point of the system will be vented to atmosphere to assure that all system components and piping are filled with water.

Question CS430.56 (9.14.2)

In the PSAR, you state that the expansion tank has sufficient capacity to replace water evaporated in the jacket water system. The final design of the cooling water system will be reviewed with regard to the system capacity for makeup due to minor system leaks at pump shaft seals, valve stems, and other components, and to maintain required NPSH on the system circulating pump. Therefore, to the maximum extent possible, expand your PSAR to provide the size of the expansion tank size will be adequate to maintain required pump NPSH and makeup water for seven days continuous operation of the diesel engine at full rated load without makeup, or provide a seismic Category I, safety Class 3 makeup water supply to the expansion tank.

Response:

The updated PSAR Chapter 9.14.2 "Diesel Generator Cooling Water System" includes the available information for the diesel generators.

For Divisions 1 and 2 engines, the standpipe is sized to provide reserve capacity to offset the system water losses due to minor leakages through the pump shaft seals and valve steams, and evaporation through vents for seven days at rated load without make-up. The available reserve water capacity in the standpipe will be defined as water contained from the water level above the system circulating pump suction needed to maintain required NPSH of the circulating pump, to the operating water level of the standpipe. For Division 3 engine, the expansion tank is sized similarly to the standpipes for Division 1 and 2 engines. The expansion tank for the Division 3 diesel engine will be designed to ASME Section III, Class 3, Seismic Category I requirements (and the tank will be provided with a lo-level alarm). The actual leakage from the jacket water system will be determined during station performance testing.

If the leakage observed exceeds the required capacity of the standpipe or expansion tank for the 7 days of operation, a backup supply from the Category I emergency plant service water system will be added.

The normal makeup water is supplied from the Category III demineralized water supply. Water can also be added manually should the Category III demineralized water supply be unavailable. Adequate NPSH will be available to the jacket water pump at all times.

A sight glass and low level alarm are provided on the standpipe or expansion tank.

Question CS430.57 (9.14.2)

Provide a tabulation showing the individual and total heat removal rates for each major component and subsystem of the diesel generator cooling water system. Discuss the design margin (excess heat removal capability) included in the design of major components and subsystems.

Response:

The updated PSAR Chapter 9.14.2 "Diesel Generator Cooling Water System" includes the available information for the diesel generators.

Each engine cooling water system and system components shall be designed to provide adequate heat removal capability for the engine it serves at rated load and heat transfer capability to the Emergency Plant Service Water System. The detailed tabulation of the individual heat removal rates will be provided in a later revision of the PSAR.

Question CS430.58 (8.14.2)

Recent licensee event reports have shown that tube leaks are being experienced in the heat exchangers of diesel engine jacket cooling water systems. Provide a discussion on the provisions which will be made to detect tube leakage, and the corrective actions that will be taken. Include jacket water leakage into the lube oil system (standby mode), lube oil leakage into the jacket water (operating mode), jacket water leakage into the engine combustion air intake and governor oil systems (operating or standby modes). Provide the permissable inleakage or outleakage in each of the above conditions which can be tolerated without degrading engine performance or causing engine failure. The discussion should also include the effects of jacket water/service water systems leakage, to the extent practical.

Response:

The updated PSAR Chapter 9.14.2 "Diesel Generator Cooling Water System" includes the available information for the diesel generators.

Question CS430.59 (9.14.2)

The diesel generators are required to start automatically on loss of all offsite power and in the event of a DBA. The diesel generator sets should be capable of operation of less than full load for extended periods without degradation of performance or reliability. Should a DBA occur with availability of offsite power, discuss the design provisions and other parameters that have been considered in the selection of the diesel generators to enable them to run unloaded (on standby) for extended periods without degradation of engine performance or reliability. Expand your PSAR to include and explicitly define the capability of your design with regard to these requirements.

Response

The diesel generator sets for CRBRP will be designed to have the capability to operate at less than full load for extended periods without degradation of performance or reliability.

The manufacturer of the diesel generators for Class IE Divisions 1 and 2 (DeLaval Turbine Inc., Engine and Compressor Division in Oakland, California) has conducted no-load endurance tests on a diesel generator set essentially identical to those intended for use on CRBRP. The objective of this test was to establish that the diesel generator set could successfully pick up and carry the designated loads after operating at a no-load and synchronous speed for an extended period of time.

The engine was run in a no-load rated speed condition for 168 hours and performed without developing abnormal engine responses, noise or vibration. The engine successfully performed with a load of 4000KW after the no-load run.

The diesel generator set of Division 3 will also be tested to ensure its capability to operate at less than full load for extended periods.

Upon receipt of an emergency signal (as a result of a DBA), the diesel generator sets will automatically start and will run on no-load (on a standby mode) if the offsite power is still available. Administrative controls will be used to shutdown the units within a reasonable time after ensuring the stability of the offsite power. The operation of the units at no-load during this time will not result in any degradation of engine performance or reliability as demonstrated by the no-load test described above.

In order to eliminate the problems of carbon build up due to prolonged diesel generator operation under light load or no load conditions, requirements will be included in the periodic testing procedure to run the diesel generators on load. This periodic loading of the diesel generators will result in blow out of built in carbon deposits and prevent any possible degradation of the engine performance.

The testing of the diesel generators is described in Section 8.3.1.1.1 of the PSAR.

Periodic testing of the diesel generator units during the plant preoperational test program and at least once every 18 months (during refueling or prolonged plant shutdown) will be performed to demonstrate full load carrying capability for an interval of not less than 24 hours of which 22 hours will be at a load equivalent to the continuous rating of the diesel generator unit and 2 hours at a load equivalent to the 2 hour rating of the diesel generator units.

Provisions have been made in the system design to synchronize the diesel generator with the offsite power sources in order to achieve the rated loading as discussed above during this testing.

Question CS430.60 (9.14.2)

Provide the source of power for the diesel engine motor driven jacket water keepwarm pump and electric jacket water heater. Provide the motor and electric heater characteristics, i.e., motor hp., operating voltage, phase(s), frequency and kw output as applicable. Also include the pump capacity and discharge head, if available.

Response:

The updated PSAR Chapter 9.14.2 "Diesel Generator Cooling Water System" includes the available information for the diesel generators.

The motor and electric heater characteristics as well as pump capacity and discharge head shall be provided in the FSAR.

Question CS430.61 (9.14.3)

Expand your PSAR to include a section on how the emergency diesel engine air startng system will conform to the design criteria and bases detailed in SRP 9.5.6 (NUREG-0800). Provide justification for non-conformance, as applicable.

Response:

The updated PSAR Chapter 9.14.3 "Diesel Generator Starting System" provides the description of the design basis demonstrating that the system design criteria are in accordance with SRP 9.5.6.

Question CS430.62 (9.14.3)

Expand your PSAR to include a detailed description of the diesel engine mounting portion of the air start system. Include such things as the function of the air line to the fuel rack, activation of the air start solenoid and air relay valves, type and number of air start motors, and any other pertinent data, if available.

Response:

The updated PSAR Chapter 9.14.3 "Diesel Generator Starting System" includes the available information for the diesel generators.

Question CS430.63 (9.14.3)

Describe the operation of the emergency diesel engine air start system. Begin with an engine start signal and continue through engine running. Include all components in the system and the function of each. Show how a component failure will not result in total failure of an engine air start system. Also, state whether the air start system, once activated, will continue to operate until all compressed air is exhausted, or will it shut down after a specified period of time to allow successive starting attempts. Refer to Figure 9.14-3, as applicable.

Response:

The description of the operation of the emergency diesel engine air start system and the safety analysis of the system is provided in the updated PSAR Chapter 9.14.3.

Question CS430.64 (9.14.3)

Describe the air dryers in the air start system. State whether they are refrigerant or dessicant type, and the air quality levels they will maintain. Provide a discussion of how the compressd air quality will be monitored, and the provisions that will be made in your operation and maintenance programs to ensure consistently high quality compressed air to the receivers.

Response:

The design basis for air dryers for all three divisions is included in the revised PSAR Chapter 9.14.3. The description of the air dryers for the diesel engines is provided in the updated PSAR Chapter 9.14.3.

Question CS430.65 (9.14.3)

Describe the instrumentation, controls, sensors and alarms provided for monitoring the diesel engine air starting system and describe their function. Describe the testing necessary to maintain a highly reliable instrumentation, control, sensors and alarm system and where the alarms are annunciated. Identify the temperature, pressure and level sensors which alert the operator when these parameters exceed the ranges recommended by the engine manufacturer and describe any operator actions required during alarm conditions to prevent harmful effects to the diesel engine. Discuss system interlocks provided, to the extent practical.

Response

The emergency diesel engine air starting system sensors and alarms for all three diesel generators will be provided for control and monitoring of the starting air parameters during normal and standby operation. These sensors will consist of the following:

1. High/low air receiver pressure

2. High-high/low-low air receiver pressure

3. High air receiver moisture

Items 2. and 3. above will actuate local alarms on the diesel engine control panel and also will be an input to a diesel engine trouble alarm in the Control Room. Control switches for the air compressors and the air dryers will be located on the local control cabinet. When the air compressor control switch is in "Automatic", the high/low air receiver pressure switches will automatically start and stop the air compressors. Pressure gages will be provided with each air receiver.

The testing and maintenance of all starting air instrumentation will be performed in accordance with the scheduled maintenance and calibration program for the Clinch River Plant.

Question CS430.66 (9.14.4)

Expand your PSAR to include a section on how the emergency diesel engine lubricating oil system will conform to the design criteria and bases detailed in SRP 9.5.7 (NUREG-0800). Provide justification for non-compliance.

Response:

The updated PSAR Chapter 9.14.4 "Diesel Generator Lubrication System" provides the description of the design basis demonstrating that the system design criteria are in accordance with SRP 9.5.7.

Question CS430.67 (9.14.4)

Expand your description of the emergency diesel engine lubricating oil system. The PSAR text should include a detailed system description of what is shown on Figure 9.14-4. The PSAR text should also describe: 1) components and their function, 2) instrumentation, controls, sensors and alarms, and 3) a diesel generator starting sequence for a normal start and an emergency start. Also Figure 9.14-4 should show the diesel engine lubrication circuits, to the extent practical.

Response:

The updated PSAR Chapter 9.14.4 "Diesel Generator Lubrication System" includes the available information for the diesel generators.

Question CS430.68 (9.14.4)

An emergency diesel generator unit in a nuclear power plant is normally in the ready standby mode unless there is a loss of offsite power, an accident, or the diesel generator is under test. Long periods on standby have a tendency to drain or nearly empty the engine lube oil piping system. On an emergency start of the engine as much as 5 to 14 or more seconds may elapse from the start of cranking until full lube oil pressure is attained even though full engine speed is generally reached in about five seconds. With an essentially dry engine, the momentary lack of lubrication at the various moving parts may bearing surfaces producing incipient or actual component failure with resultant equipment unavailability.

The emergency condition of readiness requires this equipment to attain full rated speed and enable automatic sequencing of electric load within ten seconds. For this reason, and to improve upon the availability of this equipment on demand, it is necessary to establish as quickly as possible an oil film in the wearing parts of the diesel engine. Lubricating oil is normally delivered to the engine wearing parts by one or more engine driven pump(s). During the starting cycle, the pump(s) accelerate slowly with the engine and may not supply the required quantity of lubricating oil where needed fast enough. To remedy this condition, as a minimum, an electrically driven lubricating oil pump, powered from a reliable DC power supply, should be installed in the lube oil system to operate in parallel with the engine driven main lube pump. The electric driven prelube pump should operate only during the engine cranking cycle or until satisfactory lube oil pressure is established in the engine main lube distribution header. The installation of this prelube pump should be coordinated with the respective engine manufacturer. Some diesel engines include a lube oil circulating pump as an integral part of the lube oil preheating system which is in use while the diesel engine is in the standby mode. In this case an additional prelube oil pump may not be needed.

Confirm your compliance with the above requirement or provide your justification for not installing an electric prelube oil pump.

Response:

The Divisions 1 and 2 diesels use a four-stroke engine design and are designed with a continuous prelube system to enhance starting capability after diesel shutdown periods. The design incorporates a circulating oil pump and heater which operates to circulate warm oil through the engine when not in operation. The circulating oil pump operates whenever the engine is running below 280 rpm. The heater operates when the oil temperature drops below 120°F. The Divisions 1 and 2 diesel engines have Transamerica Delaval serial numbers 77034 and 77035 and are included in item 12 of the enclosed Transamerica Delaval notification. These engines were originally to be used by Tennessee Valley Authority at the Phipps Bend Nuclear Plant near Rogersville, Tennessee. The Divisions 1 and 2 diesel engines will be altered to correct the potential problems with lubrication of the turbocharger thrust bearings reported by Transamerica Delaval under the 10CFR21 provisions.

The Division 3 diesel engine is provided with a continuous lubrication system. In addition to the engine driven lube oil pump, two motor driven pumps are provided for standby lubrication; one pump for the turbocharger and one pump for the other engine components. The motor driven turbocharger pump also operates when the engine is running. During the pre-lube period, the oil level is maintained below the camshaft level to prevent oil entering into the exhaust manifold. The lube oil cooler is acting as a heater during the pre-lube period utilizing the heat from the jacket water keep warm system.

TENNESSEE VALLEY AUTHORITY
KNOXVILLE, TENNESSEE 37902
W7C126, 400 West Summit Hill Drive

August 4, 1982

Mr. P. Brewington
Deputy Manager for Projects
CRBRP Project
Post Office Box U
Oak Ridge, Tennessee 37830

Attention: Mr. D. Hicks

Gentlemen:

CLINCH RIVER BREEDER REACTOR PROJECT
DIESEL-DRIVEN GENERATOR UNITS
CONTRACT TV-38624A, SUPPLEMENT NO. 3
LETTER NO. CR-4

10 CFR 21 NOTIFICATION

Per telecon of July 26, 1982, between your Jim Krass and our Tom Hogan, attached is all information concerning a 10 CFR 21 notification to the NRC by Transamerica Delaval Incorporated on the lubrication of the thrust bearings of the turbochargers.

Very truly yours,

TENNESSEE VALLEY AUTHORITY

C. A. Chandley, Chief
Mechanical Engineering Branch

Enclosures

Oakland, California 94621
(415) 577-7400

December 22, 1980

Tennessee Valley Authority
W10 D224-400 Commerce Avenue
Knoxville, TN 37902

Attention: C. A. Chandley
Chief, Mechanical Engineering Branch

Subject: 10 CFR 21 Notification
S/N 77024/35 (TVA, Stride)

Gentlemen:

Enclosed please find a copy of a 10 CFR 21 Notification dated December 16, 1980.

A solution to the problem tailored to your particular facility is under development and will be forwarded shortly.

Very truly yours,

TRANSAMERICA DELAVAL INC.
Engine and Compressor Division

John Wilder
Engineer, Customer Service

ncb

Enclosure

TO ADD ATTACHMENTS

SENT NOV 17 81

cc: MEDS, 100 UB-K, w/1

MEB 81 01 05 52 7

Make sure they provide us a schedule and follow through with fixing our units.

MEDS, E4B37 C-K

N6M-16

Transamerica
Delaval

Engine and Compressor Division
550 85th Avenue
P.O. Box 2161
Oakland, California 94621
(415) 577-7400

December 16, 1980

RECEIVED
DEC 18 1980
Quality Control Dept.

Director
Office of Inspection and Enforcement
U. S. Nuclear Regulatory Commission
Washington, D.C. 20555

Dear Sir:

In accordance with the requirements of Title 10, Chapter 1, Code of Federal Regulations, Part 21, Transamerica Delaval hereby notifies the Commission of a potential defect in a component of DSR and DSRV Standby Diesel Generators. There exists a potential problem with lubrication of the thrust bearings of the turbochargers which could result in engine non-availability.

Transamerica Delaval has supplied the DSR and DSRV series engines with the potential defect to the following sites:

1.	Long Island Lighting Co., Shorham Nuclear Power Station	SN 74010/12	DSR 8
2.	Middle South Energy, Grand Gulf Nuclear Station	SN 74033/36	DSRV 16
3.	Duke Power, Catawba Station	SN 75017/20	DSRV 16
4.	Southern California Edison, San Onofre	SN 75041/42	DSRV 20
5.	Cleveland Electric, Perry Nuclear Station	SN 75051/54	DSRV 16
6.	Tennessee Valley Authority, Bellefonte Station	SN 75080/83	DSRV 16
7.	Washington Public Power Supply System WPPSS #1	SN 75084/85	DSRV 16
8.	Texas Utilities Services Incorporation, Commanche Peak 1 and 2	SN 76001/4	DSRV 16
9.	Washington Public Power Supply System, WPPSS #4	SN 76031/32	DSRV 16

10.	Consumers Power, Midland 1 and 2	SN 77001/04	DSRV 12
11.	Tennessee Valley Authority, Hartsville Station	SN 77024/31	DSRV 16
12.	Tennessee Valley Authority, Rogersville Station	SN 77032/35	DSRV 16

The units at Southern California Edison are the only units that have been placed in commercial operation.

These turbochargers are manufactured by Elliott Company of Jeannette, Pa. They are installed on the engines by Transamerica Delaval and lubricated in accordance with Elliott Co. recommendations.

The potential defect exists in the lubricating oil system that supplies oil to the turbocharger bearings. The design of this system permits lubricating oil to flow to the bearings only when the engine is running and prevents oil flow to the bearings when the engine is in the standby mode. The oil seal of the turbocharger is a labyrinth type seal and is only effective when the turbocharger is running. Because of the possibility of seal leakage when the turbocharger is at rest (engine standby mode) the turbocharger L.O. system is by-passed at this time.

Turbocharger thrust bearings may experience rapid wear because of the unique operations of nuclear standby engines. Prematurely worn thrust bearings can be found by inspection of the turbochargers. If the system defect is not corrected, engine availability could be affected. The problem will be eliminated by modifying the turbocharger lube oil system so that the turbocharger thrust bearing receives adequate oil during pre-lubing. The modification to the system must also insure the turbo is not over-lubed.

Transamerica Delaval has designed the system modification correcting the problem. We will supply drawings and all the information necessary to modify the turbocharger lube oil system. Parts and technical services required will be furnished by Transamerica Delaval on request and in accordance with each individual contract. A copy of this letter is being sent to each cognizant party listed in Para. 2. Detailed instructions for performing the inspection of the turbocharger thrust bearings and for performing the modification will be sent by December 31, 1980.

We estimate that the inspection and piping modification will be completed by January 20, 1981 at the Southern California Edison San Onofre site.

This report confirms an initial telephone report on December 16, 1980 to Mr. Robert Dodds, Region 5, Chief, Engineering Section.

Our evaluation of this matter was concluded on December 15, 1980.

Sincerely,

Clinton S. Mathews
Assistant General Manager

CSM:pt

cc: Mr. Robert Dodds, NRC, 1990 N. California Blvd., Walnut Creek, CA 94596

bcc: DPT Group
Alan Barich V. Dilworth

Note to all bcc's: Dick Boyer will coordinate customer/A.E. notification with Dilworth and Durie.

CSM:pt

Question CS430.69 (9.14.4)

Several fires have occurred at some operating plants in the area of the diesel engine exhast manifold and inside the turbocharger housing which have resulted in equipment unavailability. The fires were started from lube oil leaking and accumulating on the engine exhaust manifold and accumulating and igniting inside the turbocharger housing. Accumulation of lube oil in these areas, on some engines, is apparently caused from an excessively long prelube period, generally longer than five minutes, prior to manual starting of a diesel generator. This condition does not occur on an emergency start since the prelube is minimal.

When manually starting the diesel generators for any reason, to minimize the potential fire hazard and to improve equipment availability, the prelube period should be limited to a maximum of three to five minutes unless otherwise recommended by the diesel engine manufacturer. Confirm your compliance with this requirement or provide your justification for requiring a longer prelube time interval prior to manual starting of the diesel generators. Provide the prelube time interval your diesel engine will be exposed to prior to manual start.

Response:

The Division 1 and 2 Diesel engine turbochargers are not continuously prelubricated at any magnitude with the exception of the turbocharger thrust bearings. Therefore, no accumulation of oil will occur thus precluding any fire hazard.

For the Division 3 diesel engine, see response to Question 430.68.

Question CS430.70 (9.14.4)

A three-way, air operated, temperature control valve in the lube oil discharge circuit is shown on Figure 9.14-4. Provide more detail on this valve and how it operates. Describe the control air system and how it is used to regulate lube oil temperature. Indicate the source of the control air, and show how the pressure is regulated, the consequences of a malfunction resulting in either too high or too low pressure, any provision for manual override, all alarms and indications, and any other pertinent data, to the extent practical.

Response

The air operated temperature control valve shown on Figure 9.14-4 was based on another engine manufacturer. For CRBRP design, there will be no control air system for controlling the diesel auxiliary system.

Question CS430.71 (9.14.4)

Describe the instrumentation, controls, sensors and alarms provided for monitoring the emergency diesel engine lubricating oil system, and describe their function. Describe the testing necessary to maintain a highly reliable instrumentation, control, sensors and alarm system and where the alarms are annunciated. Identify the temperature, pressure and level sensors which alert the operator when these parameters exceed the ranges recommended by the engine manufacturer and describe any operator actions required during alarm conditions to prevent harmful effects to the diesel engine. Discuss system interlocks provided. Coordinate the text material with the instrumentation and controls shown on Figure 9.14-4, to the extent practical.

Response:

The emergency diesel engine lubricating oil pressure and temperature sensors and alarms for all three diesel generators will be provided for control and monitoring of the diesel engine lubricating oil parameters during normal operation and standby mode. The sensors and alarms will consist of the following:

1. High lubricating oil temperature
2. Low lubricating oil temperature
3. Low lubricating oil header pressure
4. High lubricating oil filter discharge pressure
5. Low lubicating oil reservoir level
6. High crankcase oil pressure
7. High generator bearing oil temperature

All of the above lubricating oil sensors will actuate an individual alarm both locally at the diesel engine control panel and in the Control Room, except low lube oil temperature and high oil filter discharge which will actuate the diesel generator trouble alarm in the Control Room. The low lubricating oil header pressure and high generator bearing oil temperature will effect a trip of the diesel engine in the test mode. However, if the diesel engine is operating in the emergency mode the trip function will be bypassed. Refer to Question/Response 430.26.

The oil will be heated by either an AC motor driven lubricating oil pump or an immersion heater in the lube oil sump tank to insure rapid starting.

At least once every 18 months, during shutdown, a simulated loss of offsite power test will be conducted. A portion of this test will be to verify the diesel generator lubricating system trips are bypassed during the emergency mode of operation. In addition, testing and maintenance of all the lubricating instruments will be performed in accordance with the scheduled maintenance and calibration program for the Clinch River Plant.

Question CS430.72 (9.14.4)

A lube oil storage tank in the diesel generator room is shown on Figures 1.2-77 and 9.14-4. Explain the purpose of this tank, and state whether the stored lube oil will be used to replenish the emergency diesel engine sump during normal operation and prolonged emergency (seven days) operation. If this is the case, then the storage tank and interconnecting piping must meet Seismic Category 1 and ASME Section III Class 3 requirements. Revise your PSAR accordingly.

Response:

The purpose of the lube oil storage tank is for convenience only. The emergency diesel engine sump will contain a sufficient amount of oil to maintain the engine during normal operation and prolonged emergency (seven days) operation without the need for additional oil. The tank will be designed to ASME Section VIII and seismically supported. The tank piping to the engine will be provided with two isolation valves designed to the ASME Section III Class 3 requirements so that the failure of this tank will not cause any damage to any safety related systems.

Question CS430.73 (9.14.4)

What measures have been taken to prevent entry of deliterious materials into the engine lubrication oil system due to operator error during recharging of lubricating oil or normal operation? What provisions have been made to prevent corrosion of the storage tank interior surfaces with resulting contamination of the stored lube oil?

Response:

The updated PSAR Chapter 9.14.4 "Diesel Generator Lubrication System" includes the available information for the diesel generators.

Question CS430.74 (9.14.4)

For the diesel engine lubrication system in Section 9.5.7 provide the following information: 1) define the temperature differential flow rate, and heat removal rate of the interface cooling system external to the engine and verify that these are in accordance with recommendations of the engine manufacturer; 2) discuss the measures that will be taken to maintain the required quality of the oil, including the inspection and replacement when oil quality is degraded; 3) describe the protective features (such as blowout panels) provided to prevent unacceptable crankcase explosion and to mitigate the consequences of such an event; and 4) describe the capability for detection and control of system leakage, to the extent practical.

Response:

The updated PSAR Chapter 9.14.4 "Diesel Generator Lubrication System" includes the available information for the diesel generators.

The specific information requested above will be provided in a later revision of the PSAR.

Question CS430.75 (9.14.5)

Provide a description of the emergency diesel engine combustion air intake and exhaust system complete with test material and P&IDs. This description should conform to RG 1.70 and SRP 9.5.8 (NUREG-0800). Revise your PSAR accordingly.

Response:

The updated PSAR Chapter 9.14.5 "Diesel Generator Combustion Air Intake and Exhaust System" provides the description of the design basis demonstrating that the system design criteria are in accordance with SRP 9.5.8.

Question CS430.76 (9.14.5)

Describe the instrumentation, controls, sensors and alarms provided in the design of the diesel engine combustion air intake and exhaust system which alert the operator when parameters exceed ranges recommended by the engine manufacturer and describe any operator action required during alarm conditions to prevent harmful effects to the diesel engine. Discuss systems interlocks provided, to the extent practical.

Response

The description of the instrumentation, sensors, and alarms provided in the design of the diesel engine combustion air intake and exhaust system is provided in the updated PSAR Chapter 9.14.5. There are no controls or interlocks associated with the combustion air system.

Question CS430.77 (9.14.5)

Provide the results of an analysis that demonstrates that the function of your diesel engine air intake and exhaust system design will not be degraded to an extent which prevents developing full engine rated power or cause engine shutdown as a consequence of any meteorological or accident condition. Include in your discussion the potential and effect of fire extinguishing (gaseous) medium, recirculation of diesel combustion products, or other gases that may intentionally or accidentally be released on site, on the performance of the diesel generator, to the extent practical.

Response

The design for the diesel engine combustion air intake and exhaust system is included in the revised PSAR Chapter 9.14.5. The description demonstrates that the function of the system will not be degraded as a consequence of any meteorological or accident condition.

Question CS430.78 (9.14.5)

Discuss the provisions made in your design of the diesel engine combustion air intake and exhaust system to prevent possible clogging, during standby and in operation, from abnormal climatic conditions (heavy rain, freezing rain, dust storms, ice and snow) that could prevent operation of the diesel generator on demand.

Response

The design basis for the diesel engine combustion air intake and exhaust system is included in the revised PSAR Chapter 9.14.5. The provisions made in the design to prevent possible clogging from abnormal climatic conditions are also included.

Question CS430.79 (9.14.5)

Show that a potential fire in the diesel generator building together with a single failure of the fire protection system will not degrade the quality of the diesel combustion air so that the remaining diesel will be able to provide full rated power.

Response:

The design basis for the diesel engine combustion air intake and exhausst system is included in the revised PSAR Chapter 9.14.5. The description demonstrates that a potential fire in the diesel generator building will not degrade the quality of the diesel combustion air.

Question CS430.80 (9.14.5)

Experience at some operating plants has shown that diesel engines have failed to start due to accumulation of dust and other deliterious material on electrical equipment associated with starting of the diesel generators (e.g., auxiliary relay contacts, control switches - etc.). Describe the provisions that have been made in your diesel generator building design, electrical starting system, and combustion air and ventilation air intake design(s) to preclude this condition to assure availability of the diesel generator on demand.

Also describe under normal plant operation what procedure(s) will be used to minimize accumulation of dust in the diesel generator room; specifically address concrete dust control to the extent practical.

Response

The design basis for the diesel engine combustion air intake and exhaust system is included in the revised PSAR Chapter 9.14.5. The description indicates the provisions that have been made in the design to prevent the accumulation of dust and other deliterious material, including concrete dust.

Question CS430.81 (10.2)

Expand your discussion of the turbine speed control and overspeed protection system. Provide additional explanation of the generator electrical load following capability for the turbine speed control system with the aid of system schematics (including turbine control and extraction steam valves to the heaters). Tabulate the individual speed control protection devices (normal, emergency and backup), the design speed (or range of speed) at which each device begins operation to perform its protective function (in terms of percent of normal turbine operating speed). In order to evaluate the adequacy of the control and overspeed protection system, provide schematics and include identifying numbers to valves and mechanisms (mechanical and electrical) on the schematics. Describe in detail, with reference to the identifying numbers, the sequence of events in a turbine trip including response times, and show that the turbine stabilizes. Provide the results of a failure mode and effects analysis for the overspeed protection system. Show that a single steam valve failure cannot disable the turbine overspeed trip from functioning. (SRP 10.2, Part III, Items 1, 2, 3 and 4.)

Response:

The discussion of the turbine speed control and overspeed protection systems in the PSAR has been expanded (see update to PSAR Section 10.2.2.6). Specifically, the turbine load following capability is discussed in Section 10.2.2.6 and 10.2.2.8, while the response of the extraction system to a transient is discussed in Section 10.2.2.7. The turbine speed control and emergency trip systems are explained in Section 10.2.2.6. Attached for information only purposes is a flow diagram of the Emergency Trip System. The system arrangement to prevent a turbine overspeed due to the failure of a single main steam valve is discussed in Sections 10.2.2.6. A description of the possible failures in the turbine generator system and the effects on the turbine control system is also included in Section 10.2.2.6.

Question CS430.82 (10.2)

The turbine speed control and overspeed protection system does not incorporate stop and intercept valves between the high pressure and low pressure elements of the main turbine. Provide a discussion why such valves are not required, and show that the turbine stabilizes following a trip without the aid of stop and intercept valves. Revise your PSAR accordingly.

Response

See revised PSAR Section 10.2.2.7 for the requested information.

Question CS430.83 (10.2)

In the turbine generator section discuss: 1) the valve closure times and the arrangement for the main steam stop and control valves in relation to the effect of a failure of a single valve on the overspeed control functions; 2) the valve closure times and extractioin steam valve arrangements in relation to stable turbine operation after a turbine generator system trip; 3) effects of missiles from a possible turbine generator failure on safety-related systems or components. (SRP 10.2, Part III, Items 3 and 4.)

Response

1. See PSAR Sections 10.2.2.1 and 10.2.2.6 for the requested information.

2. See PSAR Section 10.2.2.7 for the requested information.

3. The turbine generator is located in a non-safety-related building which does not contain safety-related systems or components. PSAR Section 10.2.3 presents the results of an evaluation of the potential for turbine missiles to impact safety-related equipment in adjacent buildings.

Question QCS430.84 (10.2)

Expand your PSAR to include a discussion of the steam extraction valves design and operation. Provide the closure times for the extraction steam valves installed in the extraction steam lines to the feedwater heaters. Show that stable turbine operation will result after a turbine trip. (SRP 10.2, Part III, Item 4)

Response

See revised PSAR Section 10.2.2.7 for the requested information.

Question CS430.85

Provide a discussion of the Inservice Inspection program for throttle stop and control steam valves and the capability for testing essential components during turbine generator system operation.

Response:

The turbine stop and control valves are not safety-related items: therefore, the requirements of the ASME Boiler and Pressure Code, Section XI, Division I - Inservice Inspection are not applicable.

However, the turbine stop and control valves will be subject to a surveillance testing program. These requirements, though not fully developed at this time, are expected to include periodic cycling of each stop and control valve and applicable requirements of the Standard Review Plan 10.2.

These activities will be in addition to the planned maintenance for this equipment. The details of the complete surveillance program will be discussed in the FSAR.

Question QCS430.86 (10.2)

Discuss the effects of a high and moderate energy piping failure or failure of the connection from the low pressure turbine to condenser on nearby safety related equipment or systems. Discuss what protection will be provided the turbine overspeed control system equipment, electrical wiring and hydraulic lines from the effects of a high or moderate energy pipe failure so that the turbine overspeed protection system will not be damaged to preclude its safety function. (SRP 10.2, Part III, Item 8)

Response:

As stated in PSAR Sections 10.3.3 and 10.3.1, failure of the main steam (or any high or moderate energy piping) line cannot jeopardize any safety related equipment since there is no safety related equipment in the turbine generator building. The possibility of a turbine missile being generated as a result of overspeed is discussed in 10.2.3.

Even though the turbine is a non-safety related system, it does incorporate redundant overspeed protection systems as described in Section 10.2.2.6. A high or moderate energy pipe break would have to do the following to disable the overspeed trip protection system. The electrical and mechanical trip valves would have to be disabled in such a way as to prevent them from operating to their denergized states and dumping high pressure hydraulic fluid from the stop and control valves. At the same time, the pressure integrity of the hydraulic fluid system would have to be maintained following the steam line break so that high pressure hydraulic fluid can continue to be applied to the stop and control valves keeping them open. It is extremely unlikely that any high or moderate energy pipe break would lead to this situation thereby causing the overspeed protection system to fail. Failure of the connection from the low pressure turbine to the condenser will result in loss of condenser vacuum, thereby initiating a turbine trip.

Question QCS430.87

In the PSAR, you do not discuss the in-service inspection, testing and exercising of the extraction steam valves. Provide a detailed description of:

1. The extraction steam valves.

2. Your in-service inspection and testing program for these valves. Also provide the time interval between periodic valve exercising to assure the extraction steam valves will close on turbine trip.

Response:

See revised PSAR Section 10.2.2.7 for the requested information.

The Extraction Steam System is classified as a Non-Safety Related Item and as such the requirements of the ASME Boiler and Pressure Vessel Code, Section XI, Division 1 - Inservice Inspection are not applicable.

However, the Extraction Steam Check valves will be subject to a surveillance testing program which has not yet been fully developed. This testing will include periodic mechanical operation of the extraction check valve (including solenoids, operating cylinders, etc.).

Question QCS430.88 (10.2)

Provide P&IDs for the generator hydrogen control and bulk storage system. Identify all components in the system, and revise the PSAR text to include a description of the components and their function in the systems. Show the bulk hydrogen storage system in relation to other buildings on the site.

Response:

The design of the Turbine Generator Hydrogen Control and Storage System is still under development at this time; however, design basis and criteria are as follows:

1. The storage system is located outdoors, southeast of the maintenance bay (see PSAR Fig. 2.1-5a) away from safety related equipment.

2. The control system maintains essentially pure hydrogen (97% - 98%) in the generator casing.

3. Hydrogen is only distributed to the non-safety related TGB and distribution piping in the TGB is guard-piped.

4. The generator housing is designed with a minimum number of gas tight joints to minimize leakage of hydrogen. In addition, the generator housing is designed to withstand the effects of the pressure generated by an internal explosion of a mixture of hydrogen and air.

5. The hydrogen control panel contains a gas tight partition separating electrical equipment from hydrogen tubing and explosion proof instruments are used throughout.

6. The bulk storage unit consists of 2 sets of hydrogen bottles, one in reserve and one on line. The reserve bottles automatically come on line at a predetermined low pressure. In addition, there is a header isolation valve which shuts at a predetermined maximum flow in the event of a hydrogen pipe break.

7. A carbon-dioxide system is provided to purge the generator when changing from hydrogen to air or air to hydrogen to preclude a hydrogen/air mixture from occuring.

Attached are P&IDs BM562 AND GE13303568 for information only.

Question CS430.89

(10.3) As explained in Issue No. 1 of NUREG-0133, credit it taken for all valves downstream of the Main Steam Isolation Valve (MSIV) to limit blowdown of a second steam generator in the event of a steam line break upstream of the MSIV. In order to confirm satisfactory performance following such a steam line break provide a tabulation and descriptive text (as appropriate) in the PSAR of all flow paths that branch off the main steam lines between the MSIVs and the turbine stop valves. For each flow path originating at the main steam lines, provide the following information:

a) System identification
b) Maximum steam flow in pounds per hour
c) Type of shut-off valve(s)
d) Size of valve(s)
e) Quality of the valve(s)
f) Design code of the valve(s)
g) Closure time of the valve(s)
h) Actuation mechanism of the valve(s) (i.e., Solenoid operated motor operated, air operated diagram valve, etc.)
i) Motive or power source for the valve actuating mechanism

In the event of the postulated accident, termination of steam flow from all systems identified above, except those that can be used for mitigation of the accident, is required to bring the reactor to a safe cold shutdown. For these systems describe what design features have been incorporated to assure closure of the steam shut-off valve(s). Describe what operator actions (if any) are required.

If the systems that can be used for mitigation of the accident are not available or decision is made to use other means to shut down the reactor describe how these systems are secured to assure positive steam shut-off. Describe what operator actions (if any) are required.

If any of the requested information is presently included in the PSAR text, provide only the references where the information may be found.

Response:

Section 15.3.3 of the PSAR, as revised, addresses steam or feed line pipe break event. Section 5.5 of the PSAR describes the design of the steam generator system. An updated steam generator system valve data list is provided in the revised Section 5.5.3.4 and Table 5.5-8a.

Question QCS430.90 (10.4.1)

Provide a tabulation in your PSAR showing the physical characteristics and performance requirements of the main condensers. In your tabulation include such items, as: 1) the number of condenser tubes, material and total heat transfer surface, 2) overall dimensions of the condenser, 3) number of passees 4) hot well capacity, 5) special design features, 6) minimum heat transfer, 7) normal and maximum steam flows, 8) normal and maximum cooling water temperature, 9) normal and maximum exhaust steam temperature with no turbine by-pass flow and with maximum turbine by-pass flow, 10) limiting oxygen content in the condensate in cc per liter, and 11) other pertinent data. (SRP 10.4.1, Part III, Item 1).

Response

1) See revised PSAR Table 10.4-1
2) See revised PSAR Table 10.4-1
3) See revised PSAR Table 10.4-1
4) See revised PSAR Table 10.4-1
5) None
6) No minimum heat transfer.
7) See PSAR Figure 10.1-2 and 10.1-3
8) See revised PSAR Table 10.4-1
9) See revised PSAR Table 10.4-1
10) See revised PSAR Table 10.4-1
11) None

Question CS430.91 (10.4.1)

Discuss the effect of main condenser degradation (leakage, vacuum loss) on reactor operation. (SRP 10.4.1, Part II, Item 1.)

Response

Main condenser degradation falls essentially into two categories.

1. Circulating water inleakage will contaminate the condensate. See revised PSAR Section 10.4.6.1 for design basis for the Condensate Cleanup System. Should the circulating water inleakage be excessive, sufficient monitoring/sampling is provided to assess the effects on continued operation and technical specification limits will be established in the FSAR to address operation above design limits.

2. Loss of condenser vacuum is discussed in revised PSAR Section 10.4.2.

Question QCS430.92 (10.4.1)

Discuss the measures taken; 1) to prevent loss of vacuum, and 2) to prevent corrosion/erosion of condenser tubes and components (SRP 10.4.1, Part III, Item 1).

Response

See revised PSAR Section 10.1 for the requested information.

Question CS430.93 (10.4.1)

Indicate and describe the means of detecting and controlling radioactive leakage into and out of the condenser and the means for processing excessive amounts. (SRP 10.4.1, Part III, Item 2.)

Response

See revised PSAR paragraph 11.3.6.2 for tritium production and disposal.

Question CS430.94 (10.4.1)

Discuss the measures taken for detecting, controlling and correcting condenser cooling water leakage into the condensate stream. (SRP 10.4.1, Part III, Item 2.)

Response

PSAR Section 5.5.3.11.4 presents monitoring and alarms for the condensate stream. A condenser leak within the design parameters will be controlled by the condensate cleanup system (see revised PSAR Section 10.4.6.1). See revised PSAR Section 10.4.1.2 for provisions to correct a condenser cooling water inleakage problem.

Question CS430.95

Provide the permissible cooling water inleakage and time of operation with inleakage to assure that condensate/feedwater quality can be maintained within safe limits.

Response

See revised PSAR Section 10.4.6.1 for the requested information.

Question QCS430.96

In section 10.4.1.4 you have discussed tests and initial field inspection but not the frequency and extent of inservice inspection of the main condenser. Provide this information in the PSAR.

Response

The Main Condenser is classified as a non-safety related item and as such it does not fall under the requirements of the ASME Boiler and Pressure Vessel Code, Section XI, Division 1 - Inservice Inspection.

However, the Main Condenser will be subject to a surveillance program. These requirements are not fully developed at this time.

This activity will be in addition to the planned maintenance for this equipment. The details of the complete surveillance program will be discussed in the FSAR.

Question QCS 430.97 (10.4.1)

Indicate what design provisions have been made to preclude failures of condenser tubes or components from turbine by-pass blowdown or other high temperature drains into the condenser shell. (SRP 10.4.1, Part III, Item 3)

Response

See revised PSAR Section 10.1 for the requested information.

Question QCS430.98 (10.4.1)

Discuss the effect of loss of main condenser vacuum on the operation of the main steam isolation valves (SRP 10.4.1, Part III, Item 3).

Response

Loss of condenser vacuum has no direct effect on the main steam isolation valves (superheater outlet isolation valves).

Question CS430.99 (10.4.4)

Provide additional description (with the aid of drawings) of the turbine bypass system (condenser dump valves and atmosphere dump valves) and associated instruments and controls. In your discussion include:

1. The size, principle of operation, construction and set points of the valves.

2. The malfunctions and/or modes of failure considered in the design of the system.

3. The maximum electric load step change the reactor is designed to accommodate without reactor control rod motion or steam bypassing. (SRP 10.4.4, Part III, items 1 and 2).

Response

See revised PSAR Figure 10.3-1 for the drawing of the turbine bypass system. See PSAR Figure 5.1-4 for drawings showing the location of pressure relief devices.

See revised PSAR Section 10.3.2 for details of the pegging steam control valve, condenser dump valves and desuperheaters.

The safety/power relief valves are discussed in revised Section 5.5.2.4 of the PSAR.

The maximum electric load step change the reactor is designed to accommodate without reactor control rod motion or steam bypassing is plus or minus two percent reactor power. See PSAR Section 7.7.1.2 and 7.7.1.8 for additional information.

Question QCS430.100 (10.4.4)

Provide a P&ID for the turbine by-pass system showing system components and all instrumentation. (SRP 10.4.4, part III, item 1)

Response

See Figure 10.3-1 of the PSAR for a basic flow diagram of the turbine bypass system. P&ID BM502 and Instrument Loop Diagram BE4107 have been transmitted for your information by separate transmittal.

Question QCS430.101 (10.4.4)

Provide the maximum electric load step change that the condenser dump system and atmospheric dump system will permit without reactor trip.

Response:

CRBR is designed to take a ten percent step reduction in electric load without a reactor trip or action by the condenser dump system. Greater reductions in load will cause action by the condenser dump and/or atmospheric dump systems and a possible reactor trip initiated by the Steam to Feedwater Flow Mismatch subsystems. The exact load step which will result in a trip will depend on instrument uncertainties with a trip always occurring at values over thirty percent.

Additional information regarding these systems is located in PSAR Sections 10.3, 5.7.2, and 7.4.2.

Question QCS430.102

In Section 10.4.4.4 you have discussed tests and initial field inspection but not the frequency and extent of inservice testing and inspection of the turbine bypass system. Provide this information in the FSAR.

Response:

The Turbine Bypass System is not a safety related system and as such the requirements of ASME Boiler and Pressure Code, Section XI, Division 1-Inservice Inspection are not applicable.

However, the Turbine Bypass System will be subject to a surveillance test program. These requirements, are not developed at this time; however, they will include periodic cycling of the bypass valves and periodic testing of the control system using simulated inputs.

These activities will be in addition to the planned maintenance for this equipment. The details of the complete surveillance program will be discussed in the FSAR.

Question QCS430.103 (10.4.4)

Provide the results of an analysis indicating that failure of the turbine by-pass system high energy line will not have an adverse effect or preclude operation of the turbine speed control system or any safety related components or systems located close to the turbine bypass system. (SRP 10.4.4, Part III, Item 4)

Response:

The bypass steam line is basically an extension of the main steam header; therefore, the response to Question 430.86 regarding a high or moderate energy pipe break of a main steam line is also applicable.

Question CS430.104

Provide the results of a failure mode and effects analysis to determine the effect of malfunction of the turbine bypass system on the operation of the reactor and main turbine generator unit (SRP 10.4.4, Part III).

Response

A failure mode and effects analysis addressing the effect of this malfunction is not available at this time and will be provided as input to the FSAR. These events are discussed in revised PSAR Section 10.4.4 and revised PSAR Section 15.3.2.4.

Question CS460.1

The model that was used to calculate the source terms for normal operation assumes 1% failed fuel. Please provide the basis for such a high percentage of failed fuel. For light water reactors, the staff assumes that the reactor coolant activity concentrations are roughly equivalent to a failed fuel fraction of 0.12% for purposes of calculation of radiological effluent source terms.

Response:

It is expected that during normal operation, the best estimate of the failed fuel fraction will be 0.1% or less. The use of the 1% failed fuel assumption was to:

a. Provide an arbitrarily conservative basis for the design of biological shielding in normally occupied areas of the plant. For areas in which infrequent maintenance activities occur, the shielding is based on a range of failed fuel of 0.1%-1.0% depending upon ALARA considerations.

b. Provide plant capability for operation with larger than expected occurrences of failed fuel.

Question CS460.2

Page 11.5-3 of the PSAR discusses the options available for processing, storing and disposing of metallic sodium and sodium bearing solids. It states that a firm decision has not been made regarding method and assigned responsibility for ultimate disposal.

At the operating license (OL) stage, the applicant will be required to demonstrate that methods for processing, packaging, transporting and ultimate disposal of the waste have been developed that will satisfy the applicable criteria of 10 CFR Part 61, 10 CFR Part 71, DOT, disposal site license conditions, Regulatory Guide 1.143 and Standard Review Plan Section 11.4. The applicant should commit to developing waste processing, packaging, transportation and disposal methods in accordance with these applicable criteria.

Response:

The ultimate disposal of metalic sodium and sodium bearing solids requires the conversion of the metalic sodium to a disposible form and the cleaning of sodium bearing solids to a disposible level.

The Department of Energy will develop methods for processing, packaging, transporting and ultimate disposing of sodium waste to meet the intent of the appropriate criteria of 10CFR Part 61, Part 71, Department of Transportation, Disposal Site license conditions, Regulatory Guide 1.143, and Standard Review Plan Section 11.4. These will be demonstrated in time for the operating license.

QUESTION CS 460.3

Show that you will be in compliance with items II.F.1, Attachment 1, Noble Gas Effluent Monitor, II.F., Attachment 2, Sampling and Analysis of Plant Effluents, and III.D.1.1, Integrity of Systems Outside Containment Likely to Contain Radioactive Material (as applicable to the CRBRP) of NUREG-0737, "Clarification of TMI Action Plan Requirements".

RESPONSE:

NUREG 0737 ITEM II.F.1, Attachment 1, "Noble Gas Effluent Monitor"

In regard to II.F.1, Attachment 1, Noble Gas Effluent Monitor, of NUREG-0737, CRBRP will continuously monitor the following potential accident release paths, for gaseous radioactivity:

PATH	UPPER RANGE
1. Radwaste Building Ventilation Exhaust	10^{-6}-10^{2} micro Ci/cc
2. Reactor Service Building Exhaust	10^{-6}-10^{3} micro Ci/cc
3. Steam Generator Building (Intermediate Bay) Exhaust	10^{-6}-10^{3} micro Ci/cc
4. Annulus Cooling Exhaust	10^{-6}-10^{4} micro Ci/cc
5. Annulus and Containment Purge (TMBDB) Effluent	10^{-6}-10^{5} micro Ci/cc

Each of the above monitors will be environmentally qualified, in accordance with Reference 13 of Section 1.6. Monitors will be powered from highly reliable power sources. All monitors will employ side-stream monitoring with a beta detector and will obtain a representative sample in accordance with ANSI 13.1. The radiation level will be continuously provided for display and alarm signals which are permanently recorded by the redundant Radiation Monitoring Consoles located in the Control Room and Health Physics Area.

Initial calibration will be performed by monitor manufacturer subsequent in-plant calibrations will be performed by secondary sources which are traceable to the National Bureau of Standards.

NUREG 0737 Item II.F.1, Attachment 2, "Sampling and Analysis of Plant Effluents

Attachment 2, Sampling and Analysis of Plant Effluents, of NUREG-0737, requires sampling and analyzing plant effluents for radioiodine and particulates. CRBRP will continuously monitor the paths listed in Attachment 1 for radioiodine and particulate activity. The upper range for radioiodine will be 10^2 micro Ci/cc and for particulates 10^2 micro Ci/cc. Absorption for iodine will be 95% and particulate filter efficiency will be 99% for 0.3 micron and larger. Provisions shall be provided to ensure that the absorber is not degraded by entrained water in the effluent stream. Monitors will meet the same requirements described above for Noble Gas Effluent Monitors.

In addition to the monitoring described above, removal of samples for laboratory analysis may also be performed. Temporary shielding, as necessary, will be provided and procedures developed to ensure personnel safety when collecting samples.

NUREG 0737 Item III.D.1.1, "Integrity of Systems Outside Containment Likely to Contain Radioactive Material"

Appendix H of the PSAR provides CRBRP's evaluation of and resolution to the requirements delineated in NUREG-0718. NUREG-0718 defines requirements of NUREG-0737 applicable to Applications for Construction Permits. Included is discussion of Item III.D.1.1.

This requirement has been determined to be applicable to CRBRP in principle, recognizing that the detailed requirements are specific to LWR's and do not reflect the unique technology of LMFBRs.

By features of design and operational controls, CRBRP will confine primary coolant fluids to within containment and will not process them outside of containment. Any leakage of systems containing these primary coolant fluids would be to the containment only.

Thus, CRBRP will be in compliance with the principle of concern of Item III.D.1.1.

Question CS 471.7(12.1.11.5)

As specified in NUREG-0718, "Proposed Licensing Requirements for Pending Applications for Construction Permits and Manufacturing License," (III.D.3.1), as it relates to CRBRP, you should address action plan requirements regarding radiation protection plans which will keep exposures to workers as low as is reasonably achievable during both normal operation and accident conditions, and which would allow plant workers to take effective action to control the course and consequences of an accident. A general explanation of how the requirements will be met is required prior to issuance of the construction permit. Sufficient detail should be presented to provide reasonable assurance that the requirements will be implemented properly. Staff guidance is provided in NUREG-0761, "Radiation Protection For Nuclear Power Reactor Licensees".

Response:

A Radiation Protection Plan will be prepared in accordance with the guidelines of Task Action Plan Item III.D.3.1 and supplemented by NUREG-0761 in fulfillment of the stated requirements of this question. As discussed in Section 12.3.1, this Radiation Protection Plan will be submitted at the Operating License application stage.

QUESTION CS 471.1

Provide commitments to conform to the provisions of the following Regulatory Guides, as they apply to CRBRP, or describe alternative measures to be taken to provide a comparable degree of worker protection.

1.97, "Instrumentation for Light-Water-Cooled Nuclear Power Plants to Assess Plant and Environs Conditions During and Following an Accident"

8.12, "Criticality Accident Alarm Systems"

8.13, "Instruction concerning Prenatal Radiation Exposure"

8.14, "Personnel Neutron Dosimeters"

8.15, "Acceptable Programs for Respiratory Protection"

8.26, "Applications of Bioassay for Fission and Activation Products"

8.27, "Radiation Protection Training for Personnel at Light-Water-Cooled Nuclear Power Plants"

8.29, "Instructions Concerning Risks from Occupational Radiation Exposure"

RESPONSE

The applicability of the subject NRC Regulatory Guides to CRBRP is summarized as follows:

Regulatory Guide 1.97, Rev. 2, is considered to be applicable in principle and intent, however some parameters to be monitored for accidents in CRBRP are different from those for Light Water Reactors. The appropriate application of R.G. 1.97, Rev. 2, to CRBRP will be provided in PSAR Section 7.5.11 by May, 1982, which will show a comparable degree of protection consistent with LWR application.

Regulatory Guide 8.12, Rev. 1, Regulatory Position 1, is considered to be applicable in principle and intent. The potential for a criticality accident at CRBRP does not exist due to the quantities and form of the Special Nuclear Material, the geometric spacing and/or permanently installed neutron absorbers. Criticality evaluations for unirradiated fuel assemblies in New Fuel Shipping Containers and the New Fuel Unloading Station are discussed in PSAR Section 9.1.1.3. Criticality evaluations in the EVST and the FHC are provided in PSAR Sections 9.1.2.1.3 and 9.1.4.10.3.

Regulatory Guides 8.13, 8.14, 8.15, 8.26, 8.27, and 8.29 are considered to be applicable in principle and intent to CRBRP. The explicit application of these Regulatory Guides will be specified in the FSAR at the Operating License stage.

CS 471.2 (12.1.5) As specified in Regulatory Guide 8.19, you should use personnel exposure data for specific kinds of work and job functions available from similar operating plants. Describe information you have obtained concerning operating LMFBRs, regarding source terms and occupational radiation exposures.

Reply: The number of operating LMFBRs is very limited. Most of the existing operating LMFBRs which have had sufficient power operation to build up residual radiation sources are located in Europe and the Soviet Union. In addition, the results obtained from one operating plant are not necessarily applicable to another plant or plant design. The operating temperatures and plant arrangements are very important factors in determiningj the residual radiation dose rates.

For these reasons, our principal effort has been to develop models which predict the radiation dose rates in all cells requiring operational or maintenance personnel entry. The source terms used to derive these radiation dose rates have been compared with the available LMFBR source term information.

Light water nuclear plant experience has been used to determine maintenance requirements wherever similar components are in use.

The following sources of information have been used to determine source terms and occupational radiation exposures:

<u>Data and Source Term Model Information</u>

1. W. F. Brehm, "Effect of Oxygen in Sodium Upon Radionuclide Release from Austenitic Stainless Steel", HEDL-SA-985, September 1975

2. W. F. Brehm et al, "Radionuclide Release from 316 Stainless Steel into 538°C Sodium", HEDL TME-78-85, March 1979

3. C. Bagnall and D. C. Jacobs, "Relationship for Corrosion of Type 316 Stainless Steel in Liquid Sodium", WARD-NA-3045-23

4. Proceedings of the International Conference on Liquid Metal Technology in Energy Production, Seven Springs, Pa., 1976, "The Influence of LMFBR Fuel Pin Temperature Profiles on Corrosion Rates", S. A. Shiels, C. Bagnall, S. L. Shrock, S. J. Orbon.

<u>Sources of Information on Operating LMFBRs</u>

5. V. D. Kizin, V. L. Polyakov et al, "How BOR-60 Reactor Power Station Equipment is Services in a Radiation Environment", Atomnaya Energiyo, Vol. 37, No. 6, pp. 471-474, December 1974

6. V. D. Kizin, V. L. Polyakov et al, "Radioactivity of Long-Lived Nuclides in the Primary Loop of the BOR-60 Reactor During Operation with Defective Fuel Elements", Lenin Research Institute for Nuclear Reactors (NIIAR-P-5 299), Dimitrougrad, January 1977.

7. A. W. Thorley et al, "Fission and Corrosion Product Behavior in Primary Circuits of LMFBRs, A Status Review of Work being Done in the U.K.", TGR-Report-2856(R)

8. "DFR Behavior of Fission Products, Activation Products and Fissile Material in the DFR Coolant", TGR Memorandum 5131

9. C. A. Erdman et al, "Radionuclide Production, Transport, and Release from Normal Operation of Liquid Metal cooled Fast Breeder Reactors", EPA-520/3-75-019

Sources of Information on Radiation Exposure and Plant Maintenance

10. L. A. Johnson, "Occupational Radiation Exposure at Light Water Cooled Power Reactors", NUREG-0323, March 1978

QUESTION CS 471.3 (12.2.4.2.1)

As specified in Regulatory Guide 1.70, Section 12.3.4, you should describe criteria and methods for obtaining representative inplant airborne radioactivity concentrations, including airborne radioiodines and other radioactive materials. Describe how radioiodines will be determined during use of gaseous and particulate radioactivity monitors.

RESPONSE:

Section 12.2.4.1 of the PSAR describes the design criteria for airborne radioactivity sampling. Section 12.2.4.2.1 describes the methods used in processing airborne radioactivity samples for 1) Gaseous activities, 2) Particulate and Gaseous activities, 3) Particulate, Iodine, and Gaseous activities, and 4) alpha activities. A description of how radioiodines are determined when sampled is contained in 3) above, Particulate, Iodine, and Gaseous activities.

Samples from systems (other than general area air samples) are obtained using isokinetic or other appropriate sampling as the means of receiving a representative sample. In addition, instrumentation is located as close as practicable to the sample point and sample line bends are minimized. Sample line material is selected to minimize or eliminate such variables such as plate out, etc.

Question CS471.4 (12)

As specified in Regulatory Guide 1.70, Section 12.3.1.2, you should describe any special protective features that use shielding, geometric arrangement, or remote handling to assure that OREs are ALARA. Describe the spent fuel transfer process, with clear drawings of fuel at each step of that process, showing relevant shielding present, access control features, and maximum dose rates in occupiable space nearby. Describe precautions taken to prevent inadvertent access to all unshielded potentially very high radiation areas in the vicinity of the spent fuel transfer pathway.

All accessible portions of the spent fuel transfer pathway must be shielded during fuel transfer. Use of removable shielding for this purpose is acceptable. This shielding shall be such that the resultant contact radiation levels shall be no greater than 100 rads per hour. All accessible portions of the spent fuel transfer pathway where potentially lethal radiation fields are possible during fuel transfer, shall be clearly marked with a sign indicating that fact. If removable shielding is used for the fuel transfer pathway, it must also be explicitly marked as above. If other than permanent shielding is used, local audible and visible alarming radiation monitors must be installed to alert personnel if temporary fuel transfer pathway shielding is removed during fuel transfer operations.

Response

As specified in Regulatory Guide 1.70, Section 12.3.2, special protective features, including shielding, geometric arrangement, and remote handling, assure that overall radiation exposures are ALARA. All accessible portions of the spent fuel transfer pathway are shielded during fuel transfer. Permanent shielding incorporated in the fuel handling equipment, rather than removable shielding, is used for this purpose. This shielding is such that the resulting contact radiation levels meet the CRBRP objectives stated in the PSAR, Section 12.1.1.2.

Refueling operations are described in Section 9.1.4.1 of the PSAR. The operations described include receipt of new core assemblies into the plant (transfer from shipping containers to the ex-vessel storage tank), refueling preparations, refueling, refueling termination, and spent fuel shipping. The flow path of new and spent core assemblies during these operations is shown on the plan view of the RCB and RSB in Figure 9.1-1 of the PSAR. The text and flow path identify several locations in which core assemblies are contained for use, interim storage, or longer term storage pending use or shipment. These locations are listed below. The equipment and facilities, and their shielding, are described in the PSAR sections referenced and shown in isometric drawings in the PSAR figures referenced. Shielding of cells in which equipment is contained is described in PSAR Section 12.1.2.

Equipment or Facility	Section	Figure	Type of Core Assemblies Contained
Reactor Vessel	5.2	-	New and Spent
New Fuel Shipping Container	9.1.1	9.1-5	New Only
New Fuel Unloading Station	9.1.1	9.1-3	New Only
Ex-Vessel Storage Tank (EVST)	9.1.2.1	9.1-6	New and Spent
Ex-Vessel Transfer Machine (EVTM)	9.1.4.3	9.1-13	New and Spent
Fuel Handling Cell (FHC)	9.1.4.10	9.1-7 & 9.1-9	Spent Only
Spent fuel Shipping Cask (SFSC)	This item is separately licensed.		Spent Only

The list includes all locations for both new and spent core assemblies; however, only spent core assemblies are discussed further in this response. All spent core assemblies (fuel, blanket, control, and removable radial shield assemblies) are handled alike. The calculated radiation dose rates in normally occupied areas from spent core assemblies in these locations are listed below.

Equipment or Facility	Normally Occupied Area	Dose Rate (mrem/hr)
Reactor Vessel (24 hours after reactor shutdown)	Head access area	0.1 to 0.4
EVST	RSB operating floor above the EVST	0.05
EVTM	EVTM control console and EVTM floor valve operator locations (on RCB or RSB operating floor at least 12 feet from the EVTM centerline)	1.8
FHC	FHC operating gallery, RSB operating floor, cask corridor (with shipping cask loading port plug installed), and other cells adjacent to the FHC	0.2

In cases where transient surface dose rates exceed the limits specified in PSAR Section 12.1.2 access to the equipment is administratively controlled. In each case, definition of the area and responsibility for ensuring that personnel are excluded will be part of refueling operating procedures. The areas are identified and discussed below.

1. During passage of a spent fuel or blanket assembly through the EVTM closure valve and floor valve, the access to space within 9 ft. of the valve's surface (within 12 ft. of the EVTM centerline) is administratively prohibited. The transient dose rate at the valve's surface during assembly transfer will be about 1100 mrem/hr. The elevated level will exist for only about 10 sec.

2. During passage of the IVTM port plug through the IVTM Port Nozzle, access to the space within 7 feet of the nozzle centerline is administratively prohibited. The transient dose rate at the equipment surface during the IVTM port plug transfer is about 750 mrem/hr. The elevated level will exist for about three minutes.

3. During loading of a spent core assembly into a spent fuel shipping cask from the FHC, the access door to the cask corridor will be locked and posted as a high radiation area. Positive control will be made before each entry following the completion of the spent fuel shipping cask loading to ensure that a high radiation level does not exist. Personnel access to the corridor will be required only for mating the cask to the FHC spent fuel loading port in preparation for core assembly loading and for demating the cask after loading has been completed. The transient dose rate at the surface of the cask has been estimated to approximately 10^2-10^3 Rem/hr based upon SFSC studies. The design surface dose rate will be supplied in the FSAR. The elevated radiation level will exist for less than 30 seconds per core assembly transfer.

QUESTION CS 471.5 (12.3)

As specified in Regulatory Guide 8.8, you should attain the objectives in Section C to provide assurance that exposures of station personnel to radiation will be ALARA throughout the plant, from planning and design through decommissioning.

Describe the features that you have incorporated into your design to maintain occupational radiation exposures as low as is reasonably achievable during the eventual decommissioning of the plant.

RESPONSE:

The ALARA program for design of CRBRP has been described in Section 12A.3.1. Features incorporated into the design for maintaining operational, surveillance and maintenance radiation exposures ALARA also assist in maintaining exposures ALARA during decommissioning. The design features include the following:

(1) Permanent Shielding and Isolation of Components

Isolation of system components is provided by placing tanks, pumps, valves and process loops in separate shielded cells which will reduce the radiation exposures during decommissioning operations by reducing the exposures from adjacent radiation sources. Furthermore, the thickenss of permanent shielding between cells is based upon reducing the radiation level in the occupied cell to the objectives specified in PSAR section 12.1 with the adjacent cells operating or filled with radioactive sodium. Since Na-22, Na-24, corrosion and fission products are the predominant radiation source, draining the process systems prior to removal of components during maintenance and decommissioning will result in lower dose rates from adjacent cells than during the operating phase of the plant. Shielding of these cells for personnel protection during the operating phase of the plant is more limiting than exposure considerations for maintenance and decomissioning.

(2) Accessibility for Maintenance and Removal of Equipment

Evaluations of the various plant systems containing radioactive process streams have been conducted to determine the necessary space for portable shielding, the requirements for hoisting equipment and adequate removal paths. Features required for the installation of equipment, such as padeyes, will be retained to facilitate the removal of components during maintenance activities and decommissioning. Draining of radioactive sodium from nearby equipment (discussed in (1) above) also facilitates access for maintenance and decommissioning.

(3) Material Selection

Material used in the reactor internals and primary heat transport system have been selected to minimize the presence of activated corrosion/erosion products. As indentified in Section 11.1.5, plate

out of corrosion (mass transfer) products in the PHTS system will occur rather than the build up of local crud traps. Hence, the design has inherently avoided the localized high radiation level problems associated with crud traps.

(4) Cleanup Fission, Fuel and Corrosion Products by Cold Traps

The cold traps normally operating in the primary and ex-vessel sodium system (see Section 9.2) will collect various activated isotopes (see Table 12.1-7). As such, these components decrease the overall presence of isotopes in the components to be removed during decommissioning. Although cold trap removal is not scheduled during the operating life of the plant, an ALARA has resulted in a decision to provide integral shielding for these traps to minimize exposures during either unplanned replacement or decommissioning.

(5) Location of equipment in lowest practical radiation zone

Where practical, all equipment has been located in low radiation zones to minimize irradiation of equipment, and to permit maintenance/removal of the equipment with the lowest resulting personnel doses.

(6) Refueling System and Components

The refueling system is in place during decommissioning. This ensures that all of the spent core assemblies can be removed from the reactor and eventually removed from the site. The refueling system can also be used to remove dummy assemblies from the RV which were used in the core assembly removal as well as remove lower inlet modules from the lower internals of the RV. The core assembly handling machines have been designed for cleaning after use since they will be contaminated but not radioactive. The Fuel Handling Cell is lined with stainless steel which aids in cell decontamination.

(7) Sodium Removal and Decontamination System and Components

Cleaning equipment and decontamination facilities are provided for sodium removal and acid solution decontamination and will continue to be available for processing components for disposal during decommissioning. Installed liquid and gaseous waste processing for the effluents is in place and will be available for use during decommissioning. A regulated maintenance shop is available and can be used for disassembly of low level radioactive components for convenient disposal.

Question CS 471.6

As specified in NUREG-0718, "Proposed Licensing Requirements for Pending Applications for Construction Permits and Manufacturing License" (II.B.2), as it relates to CRBRP, you should perform radiation and shielding design reviews of spaces around systems that may contain highly radioactive fluids; implement plant design modifications necessary to permit adequate access to vital areas and protect safety equipment; and to the extent possible, provide preliminary design information at a level consistent with that normally required at the construction permit stage of review. Where new designs are involved, provide a general discussion of their approach to meeting the requirements by specifying the design concept selected and the supporting design bases and criteria; demonstrate that the design concept is technically feasible and within the state of the art, and that there exists reasonable assurance that the requirements will be implemented properly prior to the issuance of operating licenses.

Response:

The CRBRP ALARA program is described in PSAR Section 12.A. CRBRP implementation of NUREG 0718 is discussed in recently submitted Appendix H to the PSAR (Amendment 66). Your attention is directed to Section II.B.2 of Appendix H.

QUESTION CS 471.8

As specified in NUREG-0718, "Proposed Licensing Requirements for Pending Applications for Construction Permits and Manufacturing License", (III.D.3.3), as it relates to CRBRP, you should review your designs to assure that provisions for monitoring inplant radiation and airborne radioactivity are appropriate for a broad range of routine and emergency conditions. To the extent possible, provide preliminary design information at a level consistent with that normally required at the construction permit stage of review. Where new designs are involved, provide a general discussion of your approach to meeting the requirements by specifying the design concept selected and the supporting design bases and criteria. Demonstrate that the design concept is technically feasible and within the state of the art, and that there exists reasonable assurance that the requirements will be implemented properly prior to the issuance of operating licenses.

RESPONSE:

Chapter 12 of the PSAR includes detailed information concerning monitoring of inplant radiation and airborne radioactivity during routine conditions. Emergency conditions are also considered. CRBRP implementation of NUREG-0718 is discussed in Appendix H of the PSAR (Amendment 66). Your attention is directed to Section III.D.3.3. of Appendix H. Regulatory Guide 1.97, as it applies to CRBRP, is presently being incorporated into the plant design and a revision to the PSAR, Section 7. 5.11, is expected by May, 1982.

Question CS490.1

The plutonium concentration in the mixed oxide driver pins has been changed from 20 and 25% in the FFTF and the previous CRBR design to 33% in the current CRBR design. This gives rise to concern over whether any of the data base on integral fuel pin performance or on fueled-cladding behavior is relevant to the current design of CRBR. Specific concerns include:

1) How does the change of Pu concentration effect fuel cladding chemical interaction? What is the basis for this assessment?

2) The thermal conductivity and solidus and liquidus temperatures of the fuel (plus probably other phenomena that enter into thermal performance) are affected significantly by the change in Pu concentration. It seems inescapable, therefore, that the power-to-melt tests and the thermal performance models based thereon do not apply to the revised CRBR fuel design. If the applicant agrees with this assessment, how does he plan to replace these two key pieces of the fuel design evaluation methods? If he does not agree with this assessment, he is requested to justify his position.

3) How does the change of Pu concentration affect the applicability of properties and models that are dependent on stoichiometry? Is it anticipated that hitherto unimportant or unsuspected effects of Pu redistribution will become significant? How is it anticipated that these changes will affect fuel performance? What is the basis for this assessment?

4) How does the higher concentration of Pu affect the fission gas retention characteristics of the fuel? If significantly different, how does this affect the applicability of the fuel pin evaluation models? How does the changed Pu concentration affect both time dependent and time independent deformation behavior of the fuel? How will this affect fuel performance? What are the bases for both answers? If an assessment is not possible now, how does the applicant propose to resolve the issue?

5) How does the change of Pu concentration affect fuel swelling as a function of burnup? What is the basis for this assessment?

6) Why doesn't this change invalidate both the CDF and the Ducility Limited Strain models for evaluating fuel performance? If it does invalidate both models, how does the applicant plan to evaluate fuel pin performance?

7) It would seem to be a minimum requirement that some check tests of 33% Pu concentration fuel pins be performed in FFTF and some of those pins be given transient tests in TREAT to confirm the predicted effects of the higher Pu concentration. What plans does the applicant have for such tests? Please be specific in the response. If there are no such plans, how does the applicant plan to justify his assessment of the effect of the change? Are there any data at all on the behavior of irradiated mixed oxide fuel with this high a concentration of Pu?

Response

The question addresses the effects of switching from 25% Pu in depleted Uranium to 33% Pu in depleted uranium. In general, the response to the question is as follows:

The increase in plutonium enrichment in CRBRP will result in a very slight increase in the free oxygen due to the slightly higher ratio of plutonium-to-uranium fissions. The previous CRBRP plutonium enrichment was approximately 25% Pu (or 75% U^{238}) while the new enrichment is 33% Pu (or 67% U^{238}). Because the ratio of U^{238} fission rate to Pu fission rate is so low, the difference in fission products produced between 25% Pu and 33% Pu fuels will not be significant. A slightly lower fuel melting temperature and a decrease in thermal conductivity will result from the increased plutonium content.

The question implies concerns regarding the effects of extrapolating from the EBR-II data base (25% in 20-80% enriched uranium) to the CRBRP enrichment (33% Pu in depleted uranium). The response is as follows:

The CRBRP fuel will have nearly all fissions take place in plutonium whereas the EBR-II data base had a high percentage of uranium fissions. Since the uranium fissions produce more zirconium fission product, which acts as a getter for oxygen, and CRBRP has essentially no uranium fissions, CRBRP is expected to have increased free oxygen in the fuel pins.

The potential consequences to CRBRP of a slightly higher oxygen potential are; slightly increased fuel cladding chemical interaction (FCCI), enhanced Pu and O_2 migration, enhanced fission product migration, and increased fuel-sodium reaction. However, based on the results of the ANL-08 and P-15 experiments which had mostly plutonium fissions, the effects of the fission product yield has little or no effect on fuel pin performance. A programmed startup is needed at the beginning of a cycle to mitigate potential thermal performance degradation.

1) Increasing the Pu content in the CRBRP fuel from 25% to 33% did not change the fission rate per unit volume. Since nearly all fissions occur in plutonium in both the lower and higher Pu fuels, the fission product inventory in both cases is nearly identical. FCCI is primarily influenced by fission product inventory in this case and therefore, the affect of the higher plutonium concentration is insignificant. Preliminary results from the ANL-08 experiment, which included fuel rods with 30% and 40% Pu fuel, showed that FCCI to be similar or less severe than 25% Pu fuel.

2) Increased Pu concentration results in slightly decreased thermal conductivity and decreased solidus and liquidus temperatures. These properties have been well established, and fuel performance analysis codes, such as LIFE, account for these variations. Although the codes were calibrated using the 25% Pu fuel data, the fundamental nature of the thermal performance models, and the availability of the basic data, reduces the uncertainty in extrapolation to higher Pu content fuels. In addition, power-to-melt data will become available from the DEA-2 test which contains some 29% Pu fuel rods. Additional specific tests are planned or ongoing for both FFTF reloads with higher plutonium (29%) content, including DE-9, D9-3, and CRBRP (33% Pu) prototype tests (3 assemblies), and EBR-II Operational Reliability Testing (ORT) program.

   The effect of Pu content on restructuring will be available from the ANL-08 post-irradiation examination results. Preliminary information indicates that the restructuring behavior is not dissimilar to 25% Pu fuel. In addition, information will be available from the aforementioned tests.

3) The CRBRP fuel will have the same as-fabricated O/M range as in the current EBR-II and FFTF oxide fuels. Increased plutonium concentration will result in a slightly higher increase in O/M with burnup compared to 25% Pu fuel. The properties and models that depend on stiochiometry are primarily fuel creep, thermal conductivity and melting temperatures, which are already included in the property correlations and models in the current analytical codes. The available preliminary information on high Pu content fuels (ANL-08) does not indicate any significant difference in the Pu redistribution from that observed in 25% Pu fuel. Additional confirmation of this will be obtained in the aforementioned test and in particular, in CRBRP prototype tests in FFTF, which are scheduled for irradiation starting FFTF cycle 2. Based on the ANL-08 experiment fission gas release and fuel deformation data mentioned earlier, it is not expected that gaseous swelling will be affected significantly.

   Another phenomenon which depends on stoichiometry is fuel-sodium reaction in the event of a cladding breach. Since the increase in fuel O/M with burnup is more rapid compared to 25% Pu fuel, there will be more oxygen available for fuel-sodium reaction. An assessment of the effects can be made based on the current RBCB test results, which included very high burnup (11 to 15%) fuel pins. The oxygen available in these high burnup pins is higher than that in a CRBR pin at goal burnup. The diameter increases due to the fuel-sodium reaction were within the acceptable range. The current ORT/RBCB program should provide additional information for evaluating the effects of higher Pu content.

4) Currently there are no fission gas retention data on high Pu fuels. However, based on preliminary fission gas release data from ANL-08 no significant differences in retention behavior are expected compared to the 25% Pu fuel.

   Data on deformation behavior will become available when all the ANL-08 post-irradiation examinations are completed and results are evaluated. Based on ANL-08 preliminary fuel rod profilometry information no significant difference in deformation behavior is expected. However,

further evaluation of ANL-08 information is planned. Additional data will become available from the FFTF DE-9, D9-3, and CRBRP prototype tests.

5) The change in the Pu concentration to a higher value will quite possibly reduce fuel swelling, since the fission product yield of zirconium will decrease slightly. Zirconium is readily oxidized and goes into solution thereby contributing to the fuel swelling. Reduction of fuel swelling is beneficial since Fuel Cladding Mechanical Interaction (FCMI) would then be reduced. However, the ANL-08 preliminary test results have not yet confirmed this point i.e., rod deformation appears very similar).

6) The CDF and ductility limited strain models are applied to the cladding behavior. Of course, the cladding loading will be from fuel swelling and fission gas. Having a different plutonium fuel concentration does not invalidate the models now used for evaluating cladding behavior, since there are no differences that have thus far been noted in the deformation or swelling behavior based on the ANL-08 preliminary information (4 and 5 above). The current ANL-08 data do not show any differences in the total cladding loading due to fuel swelling and fission gas with 30-40% Pu fuel compared to 25% Pu fuel. If subsequent testing did show significant deformation/swelling differences, it might be necessary to alter some of the cladding loading values that input to the CDF and ductility limited strain models, but the CDF and ductility limited strain models would still be used to evaluate fuel rod cladding performance.

7) The planned tests to verify the behavior of high plutonium content in addition to the ANL-08 test are:

Test	Pu Content	Reactor	Remarks
CRBR-3	33%	FFTF	cycle 2 start
CRBR-5	33%	FFTF	cycle 5 start
D9-3	29%	FFTF	cycle 1 start
DE-9	29% FFTF	FFTF	cycle 2 start
DEA-2	29% Reload	FFTF	Test Complete PIE in progress
CRBR-Transient	33%	FFTF/TREAT	In Planning
EBR-II-Transient	33%	EBR-II/ORT program	In Planning
EBR-II-RBCB	33%	EBR-II/ORT program	In Planning

The testing mentioned above with high plutonium content is either in place or in planning stages. The steady-state and transient program plans will be provided to NRC via a summary description document in September, 1982 which will include the effect of higher Pu content.

Question QCS490.2

The current data base for fuel pin response and cladding failure threshold under transient overpower (TOP) conditions includes no data at all in the ramp range from the power-to-melt tests (about 0.005 cents/s) to the W-2 test (about 5 cents/s), and very little data for ramp rates between 5 cents/s and 50 cents/sec. Please delineate the testing planned to provide data in the cited ramp range. If no testing is anticipated in the slow ramp rate range, how is it planned to determine what the cladding failure threshold range, how is it planned to determine what the cladding-failure threshold is and what the threshold is for molten fuel expulsion (not necessarily the same)?

Response

Fuel rod response and failure thresholds have been determined for transients overpower (TOP) conditions of 50¢/sec to $3/sec. Slow ramp rate tests of 0.01 to 10¢/sec. are planned to the EBR-II Operational Reliability Testing (ORT) program. In addition, the effect of intermittent slow ramp rate transients (side by side tests with and without) are planned, as well as the effect of transients on tight bundles. The TOPI-1 (A, B, C, D) tests will explore ramp rate and transient overpower on pre-irradiated fuel rods to define breach limits. The TOPI-2 test is a transient overpower test on a pre-irradiated breached rod. TOP-4 (A, AA) (B, BB) are side-by-side tests (steady-state and steady-state plus periodic TOP) in a vehicle capable of reconstitution and utilize agressive rods designed to breach at mid-life. TOP-7 is a duty cycle test (alternating 1000 hour periods at 100 and 70% power on aggressive rod designs). TOB-10 is a tight bundle test with steady state operation and periodic TOP. The steady state and transient program plans will be available in a summary description document by the end of FY82 including a general description of the EBR-II ORT program.

The CRBRP methodology considers the response of cladding to slow ramp rate transients by modelling slow strain rate, hold time and annealing effects in the cladding. As well-characterized slow ramp rate data become available, they will be used to qualify the analytical methodology.

Question CS490.3

Current state-of-the-art analysis methods use stress-rupture based correlations for predicting fueled and unfueled cladding breach under both steady-state and transient conditions. There appears to be a lack of fundamental understanding of cladding failure mechanisms as evidenced by:

1) Very large difference in load bearing capability and ductility of fuel cladding between steady-state and transient conditions, yet stress-rupture formulations are being used for both classes.

2) Hints of fission product assisted stress cracking propagation.

3) The elimination of much of the damage with regard to transient capability when steady state irradiated above 1050°F.

What testing plans are there to better identify the mechanisms of cladding failure, to define how steady-state and transient behavior mesh together and to develop more appropriate failure criteria, particularly under overpower conditions.

Response

It is acknowledged that the use of stress-rupture type correlations for the analysis of transient events appears inappropriate. Current CRBRP methodology employs stress-rupture correlations for the analysis of steady state performance only.

On the other hand, the analyses of transient performance employ correlations which are based on short term failure data, e.g., tensile, fuel cladding transient testing. Furthermore, these correlations consider the effects of fuel-adjacency as well as the reduced irradiation effects at elevated steady state temperatures.

Planned testing programs which will enhance our understanding of transient failure mechanisms include TREAT and EBR-II transient programs and FCTT testing. The steady-state and transient program plans will be provided to the NRC via a summary description document before the end of FY82.

Question QCS490.4

Continuing questions in predicting and understanding fuel pin response to overpower conditions are the ductility and load bearing capability of fueled irradiated cladding under fuel cladding mechanical interaction (FCMI) conditions, and whether cladding response to these conditions is significantly different than exhibited under gas pressure loading. What testing is planned to define response to FCMI transient loading? Please forward whatever data may exist in this area, along with the project evaluation of the data.

Response

The fuel cladding mechanical interaction (FCMI) type loading conditions are being tested on fuel rods in the TREAT and FCR-II Operational Reliability Testing (ORT-Transient) programs.

The fuel rod cladding performance evaluation under FCMI loading conditions resulting from short term overpower events are based on cladding tests made under gas pressure (load controlled) loading in the Fuel Cladding Transient Testing (FCTT) facility at HEDL. It is assumed that gas pressure loading of cladding results in equal or lower failure loads and lower or equal average strains than FCMI (strain controlled) type loadings. The reason for this assumption is the capability of the FCMI loading system to bridge weak spots in the cladding, that is, local bulging does not develop in the FCMI strain controlled loading system. In a gas loading system a developing local bulge continues to be loaded by the same pressure; the cladding flows until plastic instability and failure occurs.

HEDL has performed exploratory tests on unirradiated cladding which was loaded in a Fuel Cladding Mechanical Interaction Mandrel Loading Test (FCMI/MLT) system. As a result ot these test data, strain controlled loading generates equal or larger average hoop strains at failure than gas loading. Because of this, minimal testing is presently planned to determine the difference in cladding failure due to FCMI and gas loading. However, the two cladding loading systems may generate different cladding failure modes: cladding

bulges and pin holes under gas loading, and cladding rips under FCMI type loading.

The mandrel test results are not being used to support the CRBRP fuel design for the above reasons.

Question QCS490.5

There appears to be evidence that cladding ductility and load bearing capability is much less affected by irradiation at temperatures above 1050 to 1100°F than by irradiation below that temperature level. This implies that under transient overpower conditions the site of the cladding breach, if it occurs, is virtually certain to be below the axial level of the transition region. This may, depending on inlet coolant temperature and coolant flow rate, force the site of the fuel expulsion in an undetermined reactivity insertion accident low enough that the fuel movement causes substantial additional reactivity insertion, significantly exacerbating the accident. Please provide:

1) The data which support the cited cladding behavior:

2) A comparison of irradiated cladding ductility and strength above and below the transition temperature;

3) The best estimate of the transition temperature and its uncertainty, and the range of temperature involved in the transition;

4) Three steam (high side) estimates of the fractions of fuel and blanket pins where in the transition temperature occurs on the cladding below X/L = 0.75, 0.65 and 0.55.

What would be the impact of lowering the inlet coolant temperature by 50 to 100°F if this were necessary to avoid the transition temperature being reached at too low an axial position.

Response

The 1000-1200°F transition in the effects of irradiation on the cladding's tensile properties is known to the applicant and is incorporated in the current correlations which describe these properties; relevant data are given in the Nuclear Systems Materials Handbook.

The low temperature region which is most affected by irradiation is characterized by an irradiation induced increase in strength; as such, operation in this region is not necessarily detrimental.

The location of a potential breach site is determined by the interaction of a number of factors. These include the axial distributions in: (a) cladding stress, (b) temperature, and (c) the phenomena which diminish the cladding's load bearing capability, e.g., interstitial loss, sodium corrosion, annealing, etc. Typically, these factors combine to yield a potential breach site which is located at or above core midplane; indeed, this location bears little or no intrinsic dependence on the axial position of the transition in the claddings sensitivity to irradiation.

In view of the above, and since the transition phenomenon is modeled in the CRBRP methodology, there is no basis for concern related to axial position of the transition point nor to consider lowering core operating temperature.

Question QCS490.6

Non-prototypic factors in TREAT transient overpower (TOP) tests of EBR-II irradiated fuel pins seriously compromise translation of the results of these tests to the CRBR. What plans are there to evaluate those factors experimentally, particularly radial power depression and short vs. long pins, and now the additional factor of 33% Pu concentration as versus the 25% Pu concentration of the tests? Other factors include non-prototypic fluence to burnup ratio and U235 to Pu fission ratio, preconditioning, and static capsule non-prototypic cladding temperature. The ratio of U235 fissioning to Pu fissioning is of concern because 30% more Zr fission product would be produced from Pu fissioning and might adversely affect fuel cladding chemical interaction through its effect on oxygen potential.

If there are no tests planned to evaluate the effects of the non-prototypic factors in the data base, how does the applicant plan to account for these factors in applying the data base to CRBR design evaluation?

Response

Consideration of non-prototypic factors in TREAT transient overpower (TOP) tests is of concern to CRBRP and to the fast breeder community. Because of this concern, plans have been made to investigate non-prototypic factors. Present plans call for TREAT and EBR-II Operational Reliability Testing (ORT) programs. The effect of radial power depression is to be investigated by tests in the EBR-II ORT program and in TREAT tests with neutron filters. Short versus long rod effects will be investigated by utilizing prototypic rods in TREAT. The 33% Pu concern and pre-conditioning will be investigated in TREAT and in the EBR-II ORT program. The U^{235} versus Pu fission ratio concern will be investigated in TREAT transient and steady-state testing of FFTF and EBR-II irradiated rods. Slow ramp rate transient overpower (TOP) data will be investigated in the EBR-II ORT program. The steady-state and transient program plans will be available in a summary description document in September, 1982, including a general description of the EBR-II ORT program.

Question QCS490.7

Several of the EBR-II pins that have been TREAT tested were irradiated in subassemblies from which other pins have exhibited metallurgical evidence of far higher temperatures than can be accounted for during irradiation by thermal hydraulic means. Please enumerate the TREAT tests that involved pins from such assemblies and the apparent temperature defect in each case. Please provide your evaluation of what effect this may have on the results of the subject tests.

Response

Fuel rods selected from the following EBR-II irradiation test assemblies were tested in the HOP and HUT Series in TREAT.

PNL-9	in HUT
PNL-10	in HUT
PNL-11	in HUT
P-14	in HUT
P-15	in HUT
PNL-17	in HOP
P-23	in HOP
ANL-A	in HOP
WSA-3	in HOP and HUT

Rods used for TREAT testing, except for one (a P14 rod), were discharged from assemblies that prior to discharge or interim examination did not exhibit failures attributed to local overheating.

Breached rods of subassemblies P14 and P23 did exhibit metallurgical evidence of hot spots. It has been implied that these over-temperatures were the result of subassembly reconstitution or associated with special rod locations. Since it is now known when and where the hot spots on rods occurred, they may have been present in other TREAT tested rods. However, since hot spots are localized, the cladding exposed to both nominal and hot spot temperatures was subjected to TREAT tests with failure likely to occur at the weakest spot. No obvious difference exists between TREAT test results with rods from assemblies which later exhibited hot spot related failures and other TREAT test results.

Question CS490.8

The FCTT data are generated at constant load and increasing temperature. Permanent straining occurs as the yield strength decreased with increasing temperature. Thus straining and annealing are inextricably intertwined in the data obtained. The data are probably relevant for loss-of-flow events; however, in overpower events, straining is more likely to be dependent on differential expansion of the fuel against the cladding and only mildly dependent of cladding temperature. What plans are there to perform FCTT tests in which the strain rate is independently controlled? Please supply whatever data may be available in this area.

Response

The FCTT test with independently controlled strain rates. Such tests were performed on unirradiated and some irradiated cladding specimens by HEDL. A schedule of availability of all such topical reports in the fuel, control, and blanket assembly design area will be provided by the end of FY82.

In addition, FCTT type tests with unirradiated and defueled cladding were performed at HEDL, not at controlled strain rates, but at constant temperature and increasing pressure and at variable ratios of pressure and temperature ramps. These tests were performed to simulate the pressure-temperature histories similar to those referenced in the questions. Figure QCS490.8-1 shows the temperatures, pressure-time histories of these tests, the number of tests and cladding fluence ranges.

Figure QCS490.8-1

TEMPERATURE-TIME HISTORIES OF VARIABLE TEMPERATURE PRESSURE FCTT TESTS

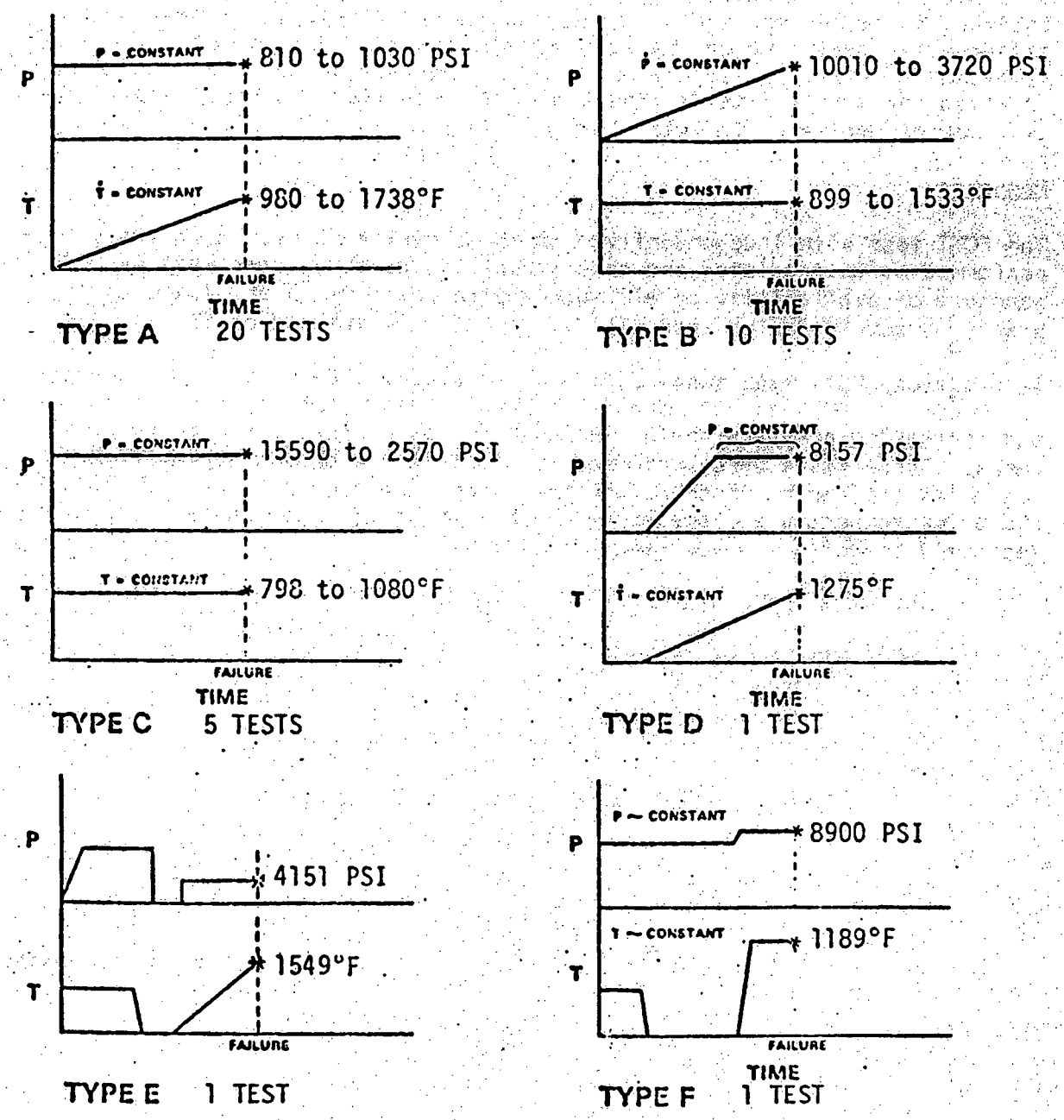

Fluences at Failure Points
6.2 to 11.2x 10^{22} n/cm^2 (F > 0.1 MeV)
$\sigma_{Hoop} \approx 7.17 \times P$ (psi)

Question QCS490.9

Essentially no data exist for either steady-state or transient performance of blanket pins. What are the current testing plans to obtain blanket pin data? If no tests are planned for blanket pins under either or both steady-state or transient conditions, how is it planned to confirm predicted cladding failure thresholds and margins to cladding failure?

Response

Three EBR-II blanket irradiation test have been completed in support of the CRBRP blanket design:

- WBA-20 - Steady state test with one power jump. The data report is in preparation.
- WBA-21 - Steady state test the post irradiation examination is complete. The documentation is in preparation.
- WBA-24 - Cyclic transient test in EBR-II with WBA-21 irradiated and fresh blanket rods; the post irradiation examination is complete. The documentation is in preparation.

The following tests are either part ot the current program planning or are ongoing:

- Four operational transient tests in EBR-II using WBA-20 and WBA-21 pre-irradiated rods and fresh rods.
- One operational transient test in EBR-II to determine the run beyond cladding breach (RBCB) performance.
- One TREAT test with WBA-21 pre-irradiated rod.
- Four tests in FFTF
  - WBA-40 - A radial blanket assembly test is in the reactor.
  - WBA-41 - An inner blanket assembly test is in the reactor.
  - WBA-45 - A thermocouple instrumented blanket assembly test is in fabrication.
  - WBA-46 - A power to melt test is in fabrication.

The steady-state and transient program plans will be available in a summary description document by the end of FY82 including the blanket development program plan. A schedule of the availability of all topical reports on the fuel, control, and blanket assembly designs will also be provided at that time.

Question QCS490.10

What plans are there to incorporate transient fuel mechanical interaction loads into the CDF fuel pin evaluation method for overpower events? Are there any plans for incorporating FCTT test results for fuel cladding into the CDF method? Has the method been used to analyze TOP tests (especially those in which cladding breach occurred), and if so, what were the results?

Has the criterion been calibrated to the high fluence data now available? If so, please tabulate the additional data that have been incorporated.

Response

In the current procedures for the analysis on overpower transient events, LIFE-IV-T is the principal source of information vis-a-vis cladding stresses due to FCMI; these stresses are subsequently used in the computation of the in-transient damage.

At the time of PSAR submittal, the calibrated transient version of LIFE was not operational. The transient analyses were conducted with a specially developed code named PCON which employed, as input, FORE-II temperatures. PCON contains fuel models which result in a conservative assessment of cladding damage, that is, load relaxation due to fuel plasticity and fuel creep was not permitted. Cladding models were consistent with those used in FURFAN and load relaxation due to cladding creep was not permitted. In addition, the fuel-to-cladding gap was assumed to be closed or the initial cladding loading was assumed to be equal to the steady state FCMI if the gap was closed at the start of the transient.

Recently, LIFE-IV-T has been calibrated against the following TOP tests: H5-7A, HUT 3-7A, HUT 3-5A, HOP 3-1B, HUT 12-1 and HUT 12-4. The calibrated code was then validated against the following tests: HUT 5-7B, HUT 5-2B, HUT 3-7B, HUT 3-5B, HUT 3-6A, HUT 5-5B and HOP 3-2C. Subsequent to the above calibration of LIFE-IV-T, comparisons of the PCON/FORE-II procedure with LIFE have shown that, of the two methods, the PCON/FORE-II procedure is the more conservative. Table QCS490.10-1 shows a nominal comparison of the average cladding and fuel temperature increase as calculated by LIFE and FORE-II.

For both the U2b and SSE umbrella overpower events at core midplane. FORE-II yields a lower cladding temperature increase and a higher fuel temperature increase than LIFE which results in a higher transient FCMI loading than would be predicted by LIFE. Table QCS490.10-2 shows the peak cladding stresses as predicted by both PCON and LIFE for both the U2b and SSE. Results show that the PCON/FORE-II methodology and the non-strain rate dependent tensile properties used for the PSAR yields the peak stresses and therefore results in a conservative assessment of the FCMI due to transient overpower events.

Even when the FCMI due to overpower events was considered, the minimum margin still resulted at the top of the fuel column. Therefore, the results reported in the PSAR for damage near the top of the fuel column represent the minimum margins or worst cases results.

With respect to the utilization of FCTT data from fuel adjacent cladding, the applicant's current methodology does, indeed, incorporate formulations derived from the entire available data base.

TABLE QCS490.10-1

NOMINAL COMPARISON OF FORE-II

AND LIFE-IV (TRANSIENT) TEMPERATURES

	Temperature Increase (^{o}F)	
	SSE	U2b
	(X/L = 0.5)	(X/L = 0.5)
Average Cladding		
LIFE-IV	164	29
FORE-II	154	30
Average Fuel		
LIFE-IV	515	182
FORE-II	525	181

TABLE QCS490.10-2

NOMINAL COMPARISON OF PCON

AND LIFE-IV (TRANSIENT) STRESSES

	Equivalent Stress at Cladding ID (PSI)	
	SSE	U2b
	(X/L = 0.5)	(X/L = 0.5)
LIFE-IV	54,950	36,010
PCON with LIFE-IV Temperatures	56,915	46,801
PCON with FORE-II Temperatures (PSAR Methodology)	64,168	48,938

Question CS490.11

The basis for construction of 99% confidence bands for the CDF fuel evaluation model was criticized by the partial draft safety evaluation report (SER) prepared in 1977 on pages 4.2-44 through 4.2-46. The question involved has not been resolved. Please discuss the relative merits of the method used in Reference (58) to Section 4.2 and the method suggested in the partial SER. Please also perform the evaluation of the two methods suggested on page 4.2-46 and provide the result. All page numbers refer to the partial draft SER.

Response

The Project is unaware that any SER for CRBRP has ever been issued by the NRC. The following response is provided on the assumption that the basis for construction of the 99% confidence bands for the CDF fuel evaluation models is a concern to the NRC.

In the CDF procedure, as outlined in Reference (58) of PSAR Section 4.2, the properties of the cladding are described by linear regression equations which were formulated using experimental data. For design level analyses, the uncertainties in the cladding properties are treated via 99% confidence bands about the regression equations.

The partial draft SER raised three issues related to the confidence bands and their mode of application in the CDF procedure. In the following response, each issue is addressed separately.

Glossary

A = intercept of regression equation,

B = slope of regression equation (i.e., regression coefficient),

N = number of data points,

S_E = standard error of estimate,

T = student's T-statistic,

V_A = variance in the intercept,

V_B = variance in the slope,

V_D = variance about the independent variable in the design environment,

$V(\hat{Y})$ = variance in the expected true value,

$\bar{X}$ = mean of independent variable from test data,

$\hat{X}$ = value of independent variable used in calculation,

$\tilde{X}$ = possible random variate about $\hat{x}$,

X_I = i-th measured value of the independent variable from test data,

$\bar{Y}$ = mean of dependent variable from test data,

$\hat{Y}$ = best estimate of the true value of the property,

$\tilde{Y}$ = possible random variate of the true value of the property,

$\tilde{Y}_D$ = possible true value of the property in the design environment,

$\tilde{Y}_m$ = possible measured value of the property in the source test environment,

Y_i = i-th measured value of the property from test data,

α = probability (confidence) level,

σ_x = standard deviation about $\bar{X}$,

σ_y = standard deviation about $\bar{Y}$,

ν = degrees of freedom.

A. Validity of the Equation Used to Compute the Confidence Bands

In the CDF technique, as described in PSAR Reference (58), the variances used to calculate the confidence bands about the regression equations are computed according to

$$V(\hat{Y}) = S_E^2 \left\{ (1/N) + (\hat{X} - \bar{X})^2 / [(N-1)\sigma_x^2] \right\} \tag{A.1}$$

The validity of the above equation has been questioned and the suggestion made by NRC that the proper variance is

$$V = S_E^2 \left\{ 1 + (1/N) + (\hat{X} - \bar{X}) / [(N-1)\sigma_x^2] \right\} \tag{A.2}$$

However, Equation (A.2) is meant to deal exclusively with predicting possible measured values of the property in the source test. Whereas, Equation (A.1) defines the variance in the true value of the property.

Clearly, the intent of the design procedure is to deal with expected values of the property in the design environment. Thus, the CDF procedure employs Equation (A.1) and adds to this the anticipated variances (i.e., uncertainties) in the independent variables as encountered in the design environment.

To highlight the fundamental differences between the two equations and their application, they are derived in parallel in the discourse which follows.

Given a test which yields N measured values of a property, Y, and the associative values the independent variable, X, then, by definition:

$$\bar{Y} = (1/N) \sum_{i=1}^{N} Y_i \quad , \tag{A.3}$$

$$\sigma_Y^2 = [1/(N-1)] \sum_{i=1}^{N} (\bar{Y} - Y_i)^2 \quad , \tag{A.4}$$

$$\bar{X} = (1/N) \sum_{i=1}^{N} X_i \quad , \tag{A.5}$$

$$\sigma_X^2 = [1/(N-1)] \sum_{i=1}^{N} (\bar{X} - X_i)^2 \tag{A.6}$$

If Y is linearly dependent on X then a linear regression equation can be formulated so that

$$\hat{Y} = A + B\hat{X} \tag{A.7}$$

describes a line (i.e., a regression line) which is a best estimate of the mean (true) value of the property when $X = \hat{X}$.

The standard error of estimate for the N measured points is given by

$$S_E^2 = [1/(N-2)] \sum_{i=1}^{N} (\hat{Y} - Y_i)^2 \tag{A.8}$$

where $\hat{Y}_i$ is the value of the regression equation evaluated at the test's i-th value of X. The standard error of estimate is somewhat comparable to the standard deviation vis-a-vis the regression line; it accounts for all random variations in the test data such as random measurement errors, variability in the pre-conditioning of the test specimens, variability in the test's environment and the related variability in the independent variable.

The variance in the intercept of the regression equation is given by

$$V_A = S_E^2/N \tag{A.9}$$

and the variance in the slope is given by

$$V_B = S_E^2 \Big/ \sum_{i=1}^{N} (\bar{x} - x_i)^2 = S_E^2 \Big/ [(N-1)\sigma_x^2] \tag{A.10}$$

The variance in $\hat{Y}$ about the regression line at $X=\hat{X}$ is obtained by summing the variances in the slope and intercept, i.e.,

$$V(\hat{Y}) = V_A + V_B(\hat{x} - \bar{x})^2 \tag{A.11}$$

Note that $V(\hat{Y})$ is the variance in the estimate of the property's true value as determined from the test and is not the variance in the test data.

Assume for a moment that all collateral variabilities need not be considered. In this case, a single possible value of the true property at $X=\tilde{X}$ would be given by

$$\tilde{Y} = \hat{Y} + RV(\hat{Y})^{1/2} \tag{A.12}$$

where R is understood to be a suitable multiplicative factor. In other words, Equation (A.12) defines the variability of the expected true value of the property if X were known precisely and if there were no extrinsic random errors.

In reality, the overall variability in the expected value of the property depends on the collateral variabilities that are operating under any given set of conditions; these collateral variances must, of course, be added to Equation (A.12).

If one were interested in estimating a possible measured value of the property in the source test* itself then the appropriate collateral variance must include the random measurement errors, the variability in pre-conditioning, etc. This, of course, is described directly by the standard error of estimate given by Equation (A.8). It follows therefore, that in the source test, a possible measured value of the property at $X=\hat{X}$ is given by

---

*A source test is defined as the test used to obtain the N measured data points one which is identical in every way.

$$\tilde{Y}_m = \hat{Y} + RV(\hat{Y})^{1/2} + RS_E \tag{A.13}$$

Expanding Equation (A.13) yields

$$\tilde{Y}_m = A + B\hat{x} + RS_E \left\{ 1 + (1/N) + (\hat{x} - \bar{x})^2 / [(N-1)\sigma_x^2] \right\}^{1/2} \tag{A.14}$$

Note that the variance employed in Equation (A.14) is exactly the form suggested by NRC [i.e., see Equation (A.1)] and that (A.14) is relevant only in computing possible measured values in the source test.

If the property in question is to be used in a design calculation, then there is no interest in the collateral variance associated with the source test's random errors. Indeed, for a design calculation, the appropriate collateral variance(s) must reflect the uncertainties in the design environment as well as the specific nature of the design problem.

Typically, the collateral variances associated with the design environment are treated via an assigned uncertainty in the independent variable. Thus, let V_D be the assigned variance about x in the design environment. Then, a possible true value of the property in the design environment is given by

$$\tilde{Y}_D = \hat{Y} + R_1 V(\hat{Y})^{1/2} + B R_2 V_D^{1/2} \tag{A.15}$$

Expanding Equation (A.15) yields

$$\tilde{Y}_D = A + B[\hat{x} + R_2 V_D^{1/2}] + R_1 S_E \left\{ (1/N) + (\hat{x} + R_2 V_D^{1/2} - \bar{x})^2 / [(N-1)\sigma_x^2] \right\}^{1/2} \tag{A.16}$$

Let $\tilde{x}$ be a possible random variate of the independent parameter, i.e.,

$$\tilde{x} = \hat{x} + R_2 V_D^{1/2} \tag{A.17}$$

Then, it follows from Equation (A.16) that

$$\tilde{Y}_D = A + B\tilde{x} + R_1 S_E \left\{ (1/N) + (\tilde{x} - \bar{x})^2 / [(N-1)\sigma_x^2] \right\}^{1/2} \tag{A.18}$$

Equation (A.18) is a direct expression of the typical application of a regression equation to a design problem. Specifically, the design level estimate of the true property is computed using the regression equation and its variance, both evaluatd at the design level value for the independent variable.

Equation (A.18) represents the procedure employed by the CDF technique to compute cladding properties; note that the variance used in (A.18) is exactly that specified in PSAR Reference (58).

B. <u>The Distribution of Data Points Relative to the Confidence Points About a Regression Equation</u>.

In Section IV of PSAR Reference (58), a series of Figures compare the regression equations to their source data, included in these figures are the 99% confidence bands about the regression line. In all cases, a large fraction of the data fall outside the confidence bands.

The question has been frequently asked as to why 99% of the data are not enclosed with the confidence bands and condequently, questions the bands' validity.

As conventionally defined, confidence limits address the probability that the true value of the property (i.e., the mean) lies within a certain range. Thus, there is no requirement that the confidence limits encompass the data.

On the other hand, the limits which are expected to encompass a specified fraction of the data are frequently referred to as tolerance limits; these limits may be used to address the probability that a measured value (i.e., a data point) will fall within a certain range.

Conventionally defined confidence bands about a regression equation can be described by Equation (A.18) with $\tilde{X} = \hat{X}$ and $|R_1|$ taken to be a proper value of the student's T-statistic. In other words,

$$\tilde{Y} = A + B\hat{X} \pm TS_E \left\{ (1/N) + (\hat{X} - \bar{X})^2 / [(N-1)\sigma_X^2] \right\}^{1/2} \quad \text{(B.1)}$$

Similarly, Equation (A.14) would describe the tolerance bands, i.e.,

$$\tilde{Y}_m = A + B\hat{x} \pm TS_E \left\{ 1 + (1/N) + (\hat{x}-\bar{x})^2 / \left[(N-1)\sigma_x^2 \right] \right\}^{1/2} \tag{B.2}$$

Equation (B.1) addressed the probability that the true value of the property lies with the range $\hat{Y} \pm |\tilde{Y} - \hat{Y}|$; Equation (B.2) addresses the probability that data points will fall with the range $\hat{Y} \pm |\tilde{Y}_m - \hat{Y}|$. Clearly $|\tilde{Y} - \hat{Y}| < |Y_m - \hat{Y}|$; thus, one would anticipate that data points may fall outside the confidence bands.

C. Conservativeness of the CDF Design Procedure.

As mentioned earlier, for design level analyses, the uncertainties in the cladding's properties are treated in the 99% confidence bands about their regression equations; these are taken to combine in the most unfavorable way possible. Depending on the property in question the most unfavorable level may be the upper or lower confidence band.

In Section V of PSAR Reference (58), the design procedure is examined and verified using a number of independent sources of data. In these verification examples, the design procedure successfully bracketed, or would have precluded, all of the failure data from (a) multistage stress-rupture tests, (b) creep/tensile and creep/burst tests and (c) FCTT tests.

The veracity of the above verifications has been questioned*. Specifically, it has been suggested that if the confidence bands do not encompass all of the data from the respective source tests, then the limits computed in the verification examples could not have bracketed the failures as shown.

In view of the discussions in Parts A and B, it should now be clear that, within the capabilities of the models, the design procedure should bracket a vast majority of the failures. Specifically, it was shown that the confidence bands describe the limits of certainly about the true values of the properties.

---

*All of the information and data necessary for the duplication of the verification analyses are contained within PSAR Reference (58).

Thus, the design level CDF, computed with the worst combination of 99% confidence bands should achieve unity prior to any CDF computed with random combinations of the properties as might be encountered in nature.

It was with this point in mind that the following study was undertaken.

The objective of the study was to compare the results of a typical design level fuel pin analysis with that from a Monte Carlo analysis. In the Monte Carlo treatment, the values for the various properties are randomly chosen from simulated experimental populations and then combined at random. This is done in a large number of FURFAN computations. Thus, within the capabilities of the models, the Monte Carlo treatment yields a sample of CDF values drawn from a population having variability comparable to that which would be obtained in nature. In this regard, the Monte Carlo distributions in the CDF may be taken as estimates of the conditional probability of achieving given CDF values.

The operating parameters assumed for this analysis are summarized in Table QCS490.11-1. These parameters correspond to conditions with 2 plant factors prevailing; note that these parameters remain the same within each Monte Carlo trial.

The results of the typical deterministic design level analysis for the subject pin is given in Figure QCS490.11-1. As shown, by combining all properties at their worst confidence levels a CDF = 1.0 is achieved after 540 EFPD. In comparison, a combination of properties at their nominal levels (with the 2 factors still prevailing) yields a CDF of 0.905 after 825 EFPD.

The Monte Carlo analysis involved 100 trials each using a set of properties which were randomly chosen from their respective distributions and randomly combined. Figure QCS490.11-2 gives the resultant distributions of CDF values at 540 EFPD, the time the design limit is achieved. Note that at this time, the entire population of possible CDF values is below unity with 99% of the values less than 0.8.

Figure QCS490.11-3 shows the cumulative distributions in the CDF's at various times during the 825 EFPD operating period. As such, this figure represents

estimates of the time dependent, cumulative conditional probabilities of achieving CDF values less than some specific value, i.e., P(CDF $\leq$ X).

Figure QCS490.11-4 compares the cululative conditional probability estimate for CDF $\leq$ 1.0 to the design level and nominal CDF's. As shown, at the 540 EFPD limit P(CDF $\leq$ 1) $\sim$ 100%. At 825 EFDP, where the nominal CDF is 0.91, P(CDF $\leq$ 1) $\sim$ 54%. In other words, at the steady state limit (i.e., 540 EFPD) there is almost a 100% probability that the CDF is less than unity; also, after 825 EFPD there is $\sim$ 54% probability that CDF $\leq$ 1.0.

TABLE QCS490.11-1 SUMMARY OF PARAMETERS USED IN ANALYSIS

Inside Radius of Cladding: 0.100 inch
Outside Radius of Cladding: 0.114 inch
Axial Location: X/L = 1.0
2σ Plant and 2σ Hot Spot Factors

TIME (DAYS)	TEMPERATURE (°F) I.D.	TEMPERATURE (°F) O.D.	PRESSURE (PSI)
0	1308	1284	180
275	1236	1211	500
275	1259	1234	540
559	1195	1170	1150
550	1214	1187	1150
825	1152	1128	1750

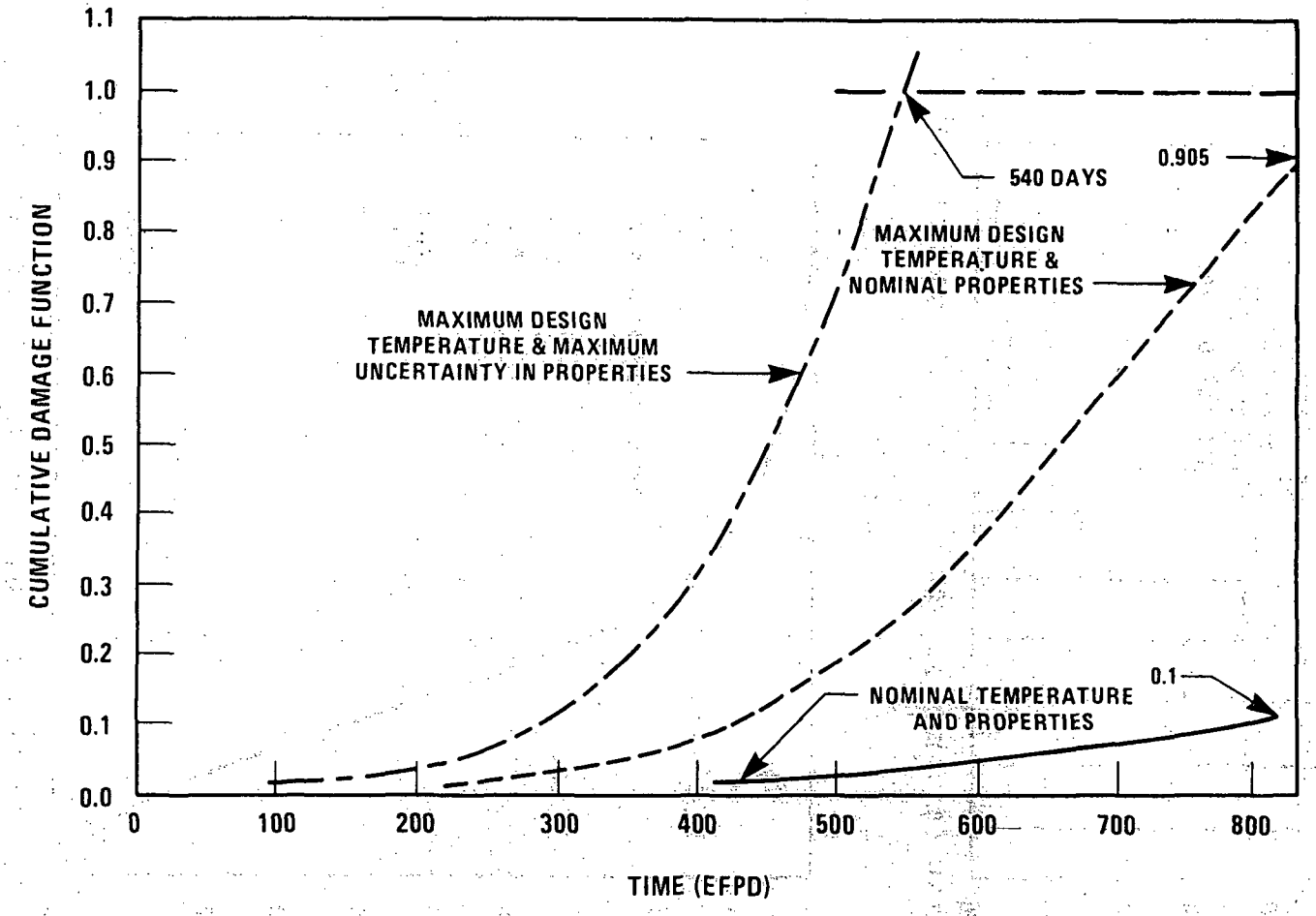

Figure QCS490.11-1. Cumulative Mechanical Damage Due to Steady State Operation at X/L = 1.0

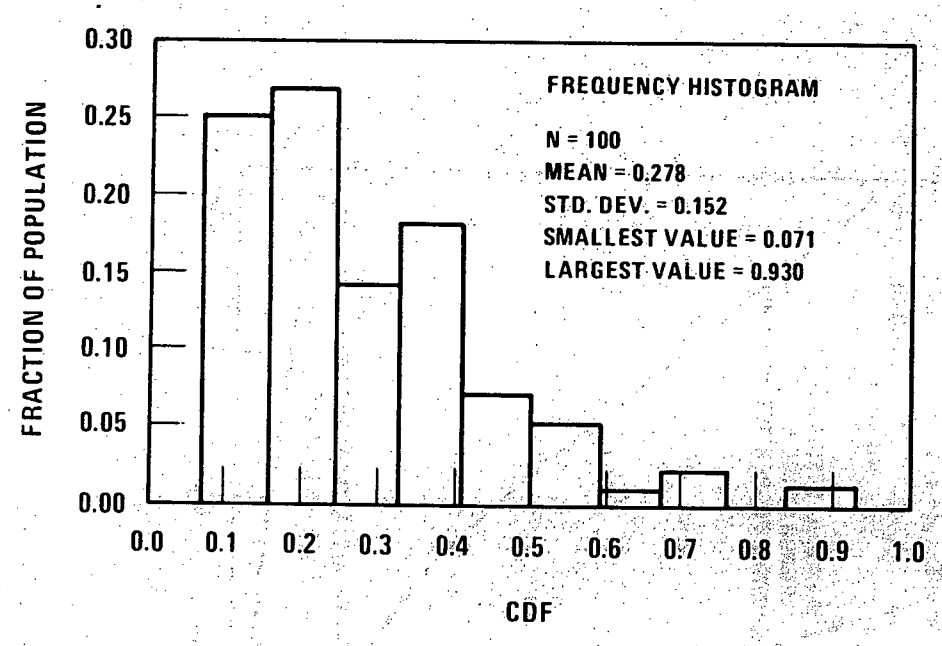

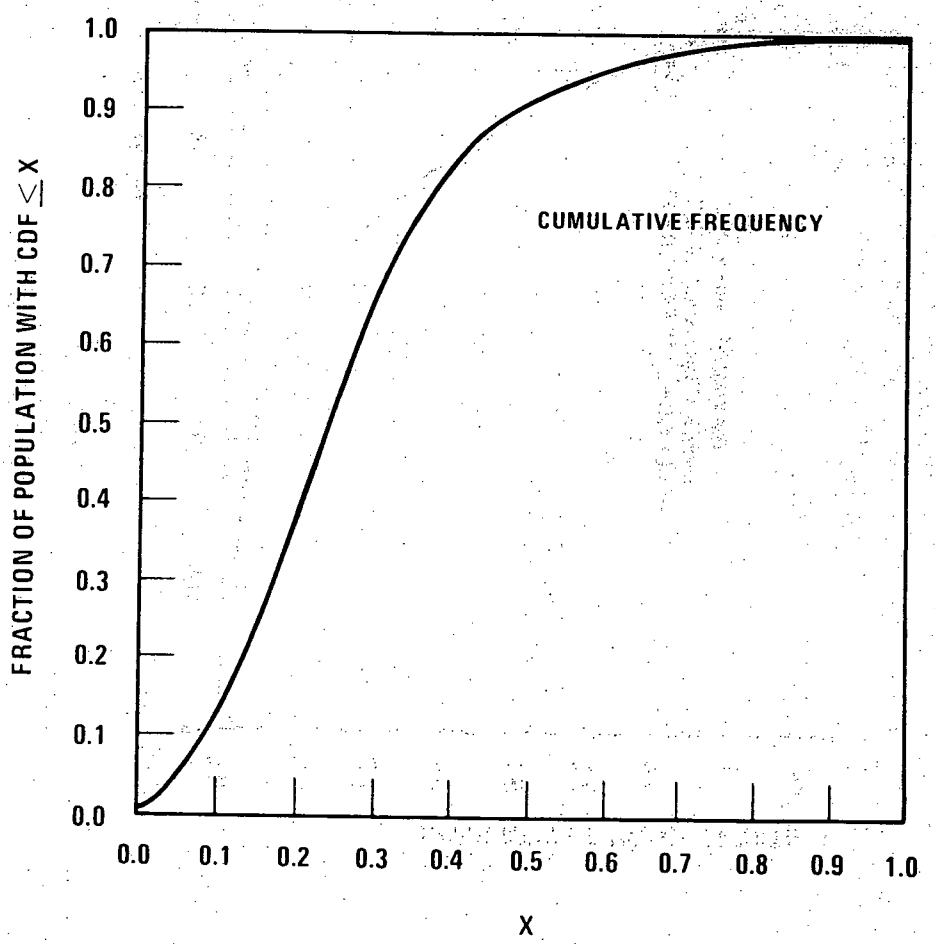

Figure QCS490.11-2. Distribution of Possible CDF Values at X/L = 1.0 After 540 EFPD of Steady State Operation

7190-2

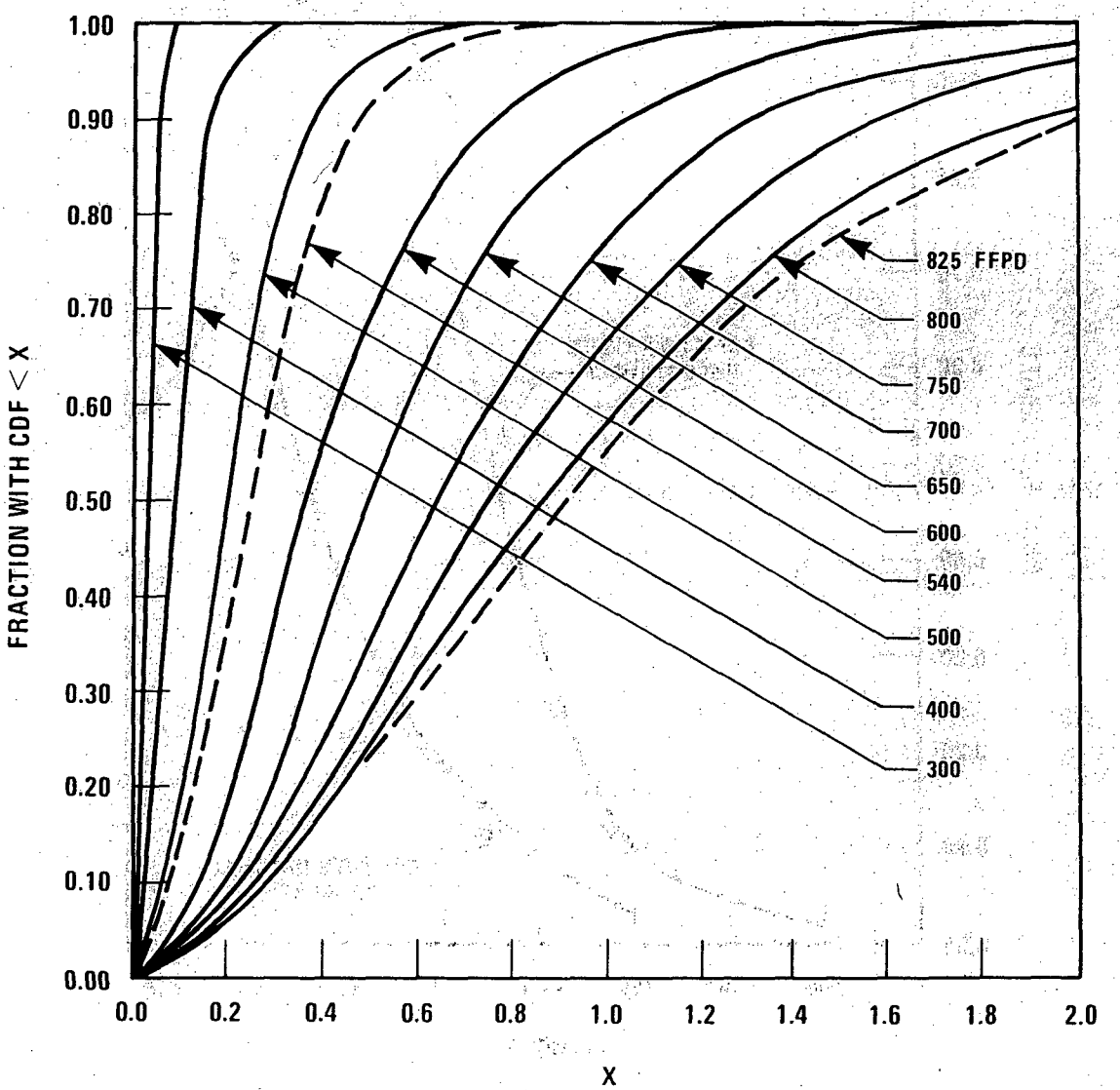

Figure QCS490.11-3. Cumulative Frequency Distributions in Possible CDF Values at X/L = 1.0 After Various Periods of Steady State Operation

7190-3

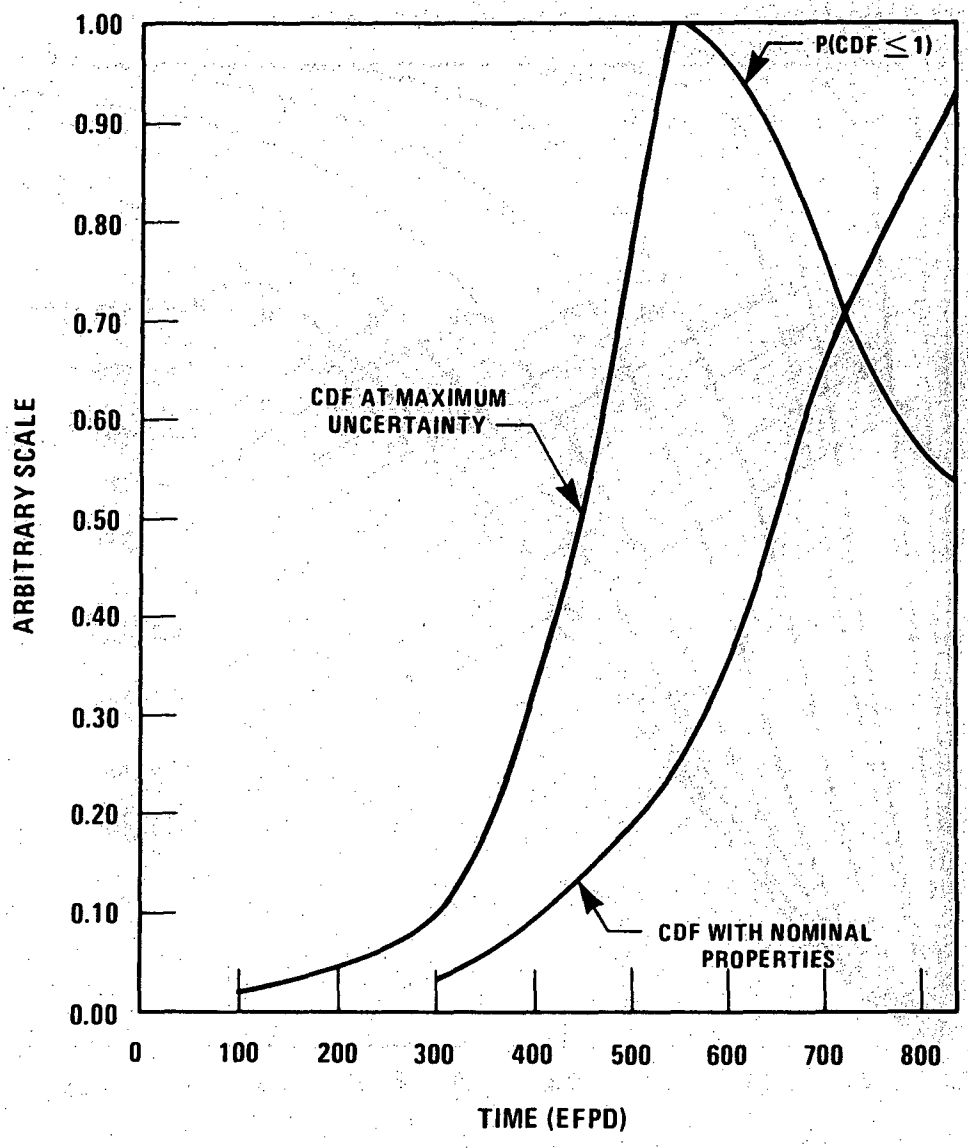

Figure QCS490.11-4. Comparison of the Conditional Probability that CDF $\leq$ 1.0 and the Corresponding CDF Values at the Design and Nominal Levels

7190-4

Question CS490.12

What plans are there to evaluate predictions for duct dilation and fuel and blanket subassembly refueling loads against FFTF experience. If it is not planned to use FFTF experience in this area, or CRBR predictions methods do not predict FFTF experience, how does the applicatant plan to demonstrate the adequacy of his design with regard to the effect of subassembly bowing and distortion?

Response

CRBRP plans to utilize FFTF experience on duct dilation and subassembly refueling loads. CRBRP has identified specific data needs to FFTF and has performed an initial prediction of the FFTF core restraint performance using CRBRP core restraint methodology. Results from the FFTF predictions will be used to qualify the CRBRP methodology prior to FSAR submittal.

Question CS490.13

After reading the description of the FRST code in appendix A, it is apparent that the ductility limited strain model for evaluating fuel performance is very different from the old "design procedure", or as it was also called, the "design recipe" or "FCF213". The information provided in the PSAR on this model is quite limited. Please provide a detailed description of the model, including material properties used and the data to back those properties. A listing of the FRST code would be very helpful. Please also indicate how the model has been calibrated and qualified.

Response

A detailed description of the FRST code will be documented in a report to be submitted to NRC by January, 1983. This report will contain a description of the analytical models employed by the code, the material properties and the basis for those properties.

The question addresses the difference between the FCF213 design procedure implemented for FFTF and the FRST design code used as the design procedure for CRBRP fuel rods. Both procedures calculate creep strains using the same creep equation for solution annealed material. Both procedures limit the ductility limited strain:

Steady State	0.2% fuel		FFTF and CRBRP
	(0.1% blanket in CRBRP)		
Normal, Anticipated	0.3% fuel		FFTF used 0.7%
and Unlikely Events	0.2% blanket	CRBRP	

FFTF limits were verified for FFTF (e.g., see PSAR Sections 4.2.1.1.2.2, pages 4.2-6 through 4.2-8, and 4.2.1.3).

The CRBRP and the FFTF design procedure are based on the same type of assumptions. Table 490.13-1 lists the assumptions for input parameters to the steady state cladding creep analysis including some of the implications of these conservation assumptions. The most important implication is that the calculated strain overpredicts the actual strain.

CRBRP and FFTF employ slightly different procedures to calculate the input parameters. These differences are a result of the effort to use consistent

properties and parameters consistent with the CRBRP nuclear, thermal hydraulic and mechanical analysis codes. For example, 2σ uncertainties are applied to plant expected conditions throughout the fuel performance analysis for CRBRP whereas nominal temperatures are used in FCF213. Differences between FCF213 and FRST steady-state property assumptions are summarized in Table QCS490.13-2. The biggest difference between both procedures is the smaller cladding tolerance and contingency of the FRST procedure. The FCF213 cladding loading due to 100% fission gas release might be thought to be more conservative than the 2σ fission gas release. However, FRST obtains fission gas pressures from the NICER and LIFE codes which are based on a defined set of coupled uncertainties which for high powered pins yield 100% release based on the +2σ release data. Therefore, comparison between the two design procedures requires a case by case comparison. In summary, the cladding loading and cladding temperatures used in FRST are more conservative than in FCF213.

The overpower transient evaluation of CRBRP rods with FRST is similar to the FCF213 approach, yet individual properties input to each procedure are evaluated differently. Table QCS490.13-3 summarizes similarities and differences of both procedures.

The FRST temperatures are obtained from the FORE-II code, which provides a consistent basis for all safety analyses. These calculations use 3σ uncertainties applied to thermal hydraulic design conditions. Local conditions are considered in evaluating cladding damage.

Both fuel rod transient evaluation procedures are validated based on the same fuel rod transient test data. The results obtained with FRST are conservative in predicting fuel rod transient test failures. The comparison of predicted and observed failure times for overpower transient tests will be included in the topical report of FRST.

The differences and similarities between FCF213 and FRST, as discussed above and in the attached tables, can be summarized as follows:

- Steady state loading is comparable only for fission gas loading (FRST considers steady state loading of the cladding due to FCMI).
- FRST calculates local axial loads due to transients which are higher than the column average loads for the limiting location.
- FRST uses consistently higher temperatures than FCF213.

TABLE QCS490.13-1

DESIGN PROCEDURE FOR

CRBRP STEADY STATE CREEP ANALYSIS

Calculated Parameters	Required Assumptions	Comment
Strain rate	Thermal creep rate for solution annealed 316 stainless steel	Overpredicts irradiated 20% CW 316 SS creep rate
Temperature	Upper 2σ local hot spot over design life	97.5% of time temperature is below this requirement
Fission gas	Total gradient totally relaxed by thermal creep	Primarily relaxed by non-damaging irradiation creep
Fission gas	Upper 2σ limit, linear by cycle	Linear behavior more conservative than actual exponential increase
Fuel loading	Worst prediction considered	Worst combination of irradiation induced creep and swelling and fabricated variables
Cladding wastage	Upper limit on tolerance, wear, defects, sodium corrosion and fission product attack	Approximately 40% of original cladding thickness is assumed not effective at end of design life
Stress limit	Below proportional limit	No plastic strain allowed

TABLE QCS490.13-2

COMPARISON OF FCF-213[1] AND FRST

STEADY STATE PERFORMANCE EVALUATION ASSUMPTION

Property	FCF-213[1]	FRST	Comments
Cladding Loading	Fission Gas Pressure (100% Nominal Release)	$+2\sigma$ Fission Gas + Uncertainties and FCMI from LIFE[2]	Comparable at X/L = 1.0, FRST, More Conservative Otherwise
Cladding Temperature	Nominal Cladding ID	Hot Spot Midwall with Uncertainties at $+2\sigma$ Level	FRST More Conservative
Cladding Tolerance and Contingency	2.5 Mils	1.5 Mils	
Fuel Cladding Chemical Interaction	2.0 Mils @ BOL	CDF/LIFE Model	FCF-213 Used for Gas Loading Only, No Effect Otherwise
Sodium Corrosion	2.1 Mils Max. @ EOL	CDF/LIFE Model	

NOTES:
(1) As described and verified in addendum to HEDL-TME-75-48
(2) Corrected by wastage to give same stress

TABLE QCS490.13-3

COMPARISON OF FCF-213[1] AND FRST

OVERPOWER TRANSIENTS EVALUATION ASSUMPTIONS

Property	FCF-213[1]	FRST	Comments
Fuel & Cladding Temperature Increase	Nominal by ARGUS Code	3σ Hot Spot by FORE-II Code	FORE-II Nominal Temperatures Similar to LIFE-IV (TREAT)
Cladding Thermal Expansion	Same		Conservative Relative to Failure Time
Fuel Axial Expansion	Same		
Cladding Pressure at Time Zero	100% Fission Gas Only	$+2\sigma$ Fission Gas and LIFE SS FCMI	Transient Increase of SS Loading Very Conservative
Plenum Temperature During Transient	Outlet Coolant Temperature	Local Cladding Temperature	
Basis for Transient Contact Pressure	Fuel Column Axial Average	At Local (X/L) Conditions	Little Difference for EBR-II/TREAT, FRST Conservative for Limiting X/L
Stress-Strain Curves	$\varepsilon P = 0.2\%$ $\varepsilon^* = 0.7\%$	εP = Prior PL, $\varepsilon^* = 0.3\%$ for DLS	Necessary for Multiple Transients, Stress
	Same for Contact Pressure		At ε^* is Same

NOTE:
(1) Per HEDL-TME-75-40, R. E. Baars, September 1975

Question CS490.14

Substantial power jumps are anticipated in some fuel and blanket pins on starting up after refueling. The impact of these power jumps is to cause a sharp increase in fuel cladding mechanical interaction (FCMI) which then decays off as fuel and cladding deform under stress. The phenomenon was evaluated for the PSAR using a version of the LIFE code which had not been calibrated as to its prediction of FCMI or the manner in which FCMI decays. How is it planned to calibrate the method for predicting FCMI and the effect thereof on fuel damage?

Response

The LIFE code (which provides FCMI loadings) has been calibrated to EBR-II fuel rods which have experienced small power jumps during irradiation. In addition, the LIFE code utilizes blanket rods in the calibration which underwent power jumps in EBR-II varying between 5 and 25%. The LIFE code has been checked against fuel and blanket rods in EBR-II which experienced 54 cyclic transients and a final power jump of from 25 to 50%. Future plans are to utilize the data that is to be obtained from the EBR-II Operational Reliability Testing (ORT) program to qualify the code. The ORT program will examine the effect of slow transients on fuel and blanket rods that occur when FCMI is at or near a maximum. The steady-state and transient program plans will be available for review via a summary description document by the end of FY82, including a description of the EBR-II ORT program.

In addition, it should be noted that CRBRP intends to mitigate the effects of power jumps at refueling on FCMI via a programmed startup (see PSAR Figure 4.2-16).

Question CS490.15

Experience with the FFTF fuel system will be essential to resolving several licensing issues for the CRBR. Please detail the plans for surveillance of FFTF driver fuel pins (including both non-destructive and destructive examinations) and for transient tests of FFTF irradiated fuel pins. To what extent will the project have influence over the base technology program?

Response

The FFTF has a Driver Fuel Evaluation plan that includes Post Irradiation Examination (PIE) surveillance of fuel assemblies and of fuel pins contained within the assemblies. Present program plans (which are periodically updated) include approximately 20 FFTF driver assemblies. Presently, two assemblies are to be removed at each of the first four cycles. In addition, two instrumented assemblies, one power-to-melt assembly (PIE ongoing), six Run to Cladding Breach (RTCB) assemblies, and several special test assemblies are to be examined. The PIE includes both non-destructive and destructive examination of fuel rods and also duct examination. Transient testing plans of FFTF driver fuel rods have not as yet been finalized. CRBRP input to the transient testing plan has been presented, and a preliminary TREAT testing program is being finalized. The steady state and transient program plans will be provided in a summary description document to be available by the end of FY82.

Question CS490.16

Several transient tests have been conducted since the most recent CRBR licinsing activity. Documentation (data report, final report) available now or which becomes available in the future is requested for the following tests:

HEDL	ANL
HOP PTO 1-2A	J1
HOP PTO 3-2E	P2
HUC PTO 2-2A	P3
HOP 1-6A	P3A
HUT 3-5B	P4
HUT 5-5B	H6
HUT 3-6A	
HUT 3-6B	
W-2	
W-1	

All HEDL tests above bear the new test designation.

Response

A schedule for the availability of all such topical reports supporting the CRBRP fuel, control, and blanket assembly design will be provided by the end of FY82.

Question CS490.17

The behavior of irradiated core 1 steel for the FFTF duct and fuel pin cladding was found to be significantly different in swelling and steady-state stress rupture strength from N-lot and other test steels upon which much of CRBR design was based. How does the applicant plan to demonstrate the conservatism of CRBR design in view of the unexpected additional uncertainty in material behavior that this implies? Does the applicant plan to initiate irradiation tests early-on to discern whether a similar deviation will occur for CRBR duct and fuel pin cladding material? If no such testing is planned, how does the applicant plan to discern such a deviation before it has become a problem in CRBR?

Response

CRBRP intends to procure 316 stainless steel to FFTF core 4 type specifications. FFTF core 4 material will be irradiated in FFTF to discern any major deviations from the data base. It is expected, however, that only heat-to-heat variations will exist between FFTF core 4 steel and CRBRP production material. The effect of heat-to-heat variations have been found to be small as evidenced by FFTF core 1 data.

Question CS490.18

The discussion of operation with defected fuel pins in the PSAR was apparently current as of September, 1979. Please update this discussion as may be warrented by new information.

What additional defected pin test results have become available since 1979, and how do they apply to the CRBR? Have any transient tests been performed (or are any planned) on defected pins? If no transient tests on defected pins are planned, how does the project plan to demonstrate that continued operation with failed pins would be safe, since this entails exposure to anticipated and unlikely events?

How is the change to 33% Pu concentration expected to affect continued operation of failed fuel pins?

Response

A comprehensive test program to address the Run Beyond Cladding Breach (RBCB) capability has been undertaken and is ongoing. Two pre-defected irradiated fuel rod assembly steady-state tests have been completed in EBR-II and reported (RBCB-6, 7, Reference 1 and 2). Three additional irradiated fuel rod assembly steady-state EBR-II tests have also been completed in which breaches occurred naturally and operation continued after breach (RBCB-1, 2, 3). In addition, another pre-irradiated fuel rod bundle steady-state EBR-II test in the Breached Fuel Test Facility (BFTF) has also been completed (XY-2) in which a breach also ocurred naturally. United Kingdom data have been reported (Reference 3) on the effects on Dounreay Fast Reactor (DFR) irradition of large number of pre-defected fuel rods. They conclude that even in high burnup rods, continued operation after failure can be allowed for at least 60 days without unacceptable deterioration of the rod or significant loss of fuel. The U.S.-obtained steady-state information also indicates benign operation. Preliminary conclusions are that there was little fuel loss; enhanced detectable delayed neutron detector signals were observed and no rapid rod-to-rod propagation occurred. Steady-state operation can safely continue for at least (approximately) 22 days. The defects appear to grow mostly due to reactor shutdown-startup operation.

As part of the EBR-II Operation Reliability Testing (ORT) program, additional RBCB testing is either planned or underway. Fuel steady-state kinetics and contamination fuel rod bundle tests are planned (RBCB-K1, K2, K2A, K2B, K2C). The objectives of thee tests are to utilize the EBR-II BFTF to confirm the kinetics of fuel-sodium reaction in breached mixed-oxide rods, to determine the delayed-neutron (DN) signals from them as a function of time and breach condition, and to characterize the type of contamination to be expected from RBCB operation. Three detection and instrumentation fuel rod bundle tests are planned (RBCB-D1, D2, D3). The objectives of these tests are to determine delayed neutron release characteristics from breached rods as a function of reactor power and sodium temperature and will utilize both open core EBR-II positions and a specially instrumented Fuels Performance Test Facility (FPTF) in the EBR-II. Five additional Fuel and Irradiation Variables tests are planned (RBCB-V@, V4, V5, V6, V7) with the objectives of thee tests to invetigate a range of fuel and irradiation variables expected to influence the swelling and degradation of fuel and blanket rods in open core EBR-II positions. The V2 test will explore plenum defects, the V4 test involves larger diameter fuel rods, the V5 test will use blanket rods, the V6 test will be an unreconstituted test to explore mid-life failures, and the V7 test will provide information on storage effects in sodium.

There have been no recent transient tests run on defected fuel rods. In the ORT program, it is presently planned to have a transient overpower test (TOP 1-2) on a breached rod. The steady-state and transient program plans will be available in a summary description document by the end of FY82, including the ORT/RBCB program plan.

The RBCB-V6 test mentioned earlier is presently planned to study the 33% plutonium rods. It is expected that there may be a slight enhancement of fuel-sodium reaction due to increased oxygen availability.

References: 1) HEDL-TME-79-23, "Results from the RBCB Irradiation of a Pre-Defected Pin (RBCB-6)", D. C. Langstaff, et.al., March, 1979.

2) HEDL-TME-79-62, "Results from the RBCB Irradiation of a Pre-Defected Pin (RBCB-7)", D. C. Langstaff, et.at., February, 1980.

3) "Defect Pin Behavior in the DFR", W. M. Sloss, K. Q. Bagley, E. Edmonds, and P. E. Potter. International Conference on Fast Breeder Reactor Fuel Performance, Monterey, California, March 5-8, 1979 (Library of Congress Catalog Card No. 79-50775).

Question CS490.19

There are a number of thermal and mechanical fuel performane codes, both steady-state and transient, that more or less satisfactorily predict data available on thermal performance, cladding breach, and cladding inelastic strain. Yet these codes can vary wildly as to fuel-cladding interface pressure, gap conductance, fission gas release, etc., particularly in extrapolations outside the calibration data base. This situation arises because the only data available for calibration are integral-pin, post-test data including thermal data relatively remote from the region of interet. It is virtually impossible to qualify individual phenomena models; this coupled with the number and complexity of models and the uncertainty of material properties allows an unlimited number of solutions to the problems of predicting extrapolated performance.

It is of particular concern therefore, that all temperatures and performance predictions be performed in a consistent fashion for the purpose of reviewing fuel performance. Correlations and models that use calculated input parameters (for instance, the Failure Potential Correlation, or any of the SIEX code correlations) should be used only in keeping with the manner in which they wre developed. Otherwise their use may yield totally invalid results. Alternatively, when assessing compliance with a criterion based on independent data, use of different models may give very different assessments.

What steps has the applicant taken, or does he plan to take, to ensure that all evaluations will be done in a consistent fashion, and that inputs to all empirical correlations will be determined in a fashion consistent with their development?

Response

CRBRP agrees with the stated concern and takes considerable care to insure consistency in analytical methods through implementation of the following project procedures:

- Analysis checking procedures.
- Analysis code verification and qualification procedures
- Requirements for approval of material properties to be used by the project.
- Configuration control of all baselined documentation (drawings, discussion, hot channel factors, etc.)

The checking, verification, and code qualification procedures will preclude the possibility that individual models developed and calibrated using one code are taken out of context and used in another code.

The CRBRP final analysis verification and qualification are subject to Project audit.

Question CS490.20

Cladding breach for undercooling conditions is generally considered to occur when the current burst pressure declines below the plenum pressure due to increasing cladding temperature. There are few data, if any, available to conservatively confirm just when breach would be expected. Virtually all FCTT data were obtained for either very high gas pressure or for low fluence or nonfueled cladding, and the loss of coolant tests conducted by ANL were all for low burnup pins. Please supply any additional data that may now be available (either FCTT or integral pin data) that are more relevant than the data quoted above to end-of-life, undercooling failure threshold conditions - that is, at plenum pressures in the 1000 to 1500 psi range, and at cladding irradiation damage levels approaching end-of-life conditions.

If no more relevant data than that quoted above are available, are there plans to obtain such data? If so, please describe those plans. If not, how does the applicant plan to demonstrate the conservatism of the fuel and blanket design for undercooling conditions?

Response

Additional FCTT tests were performed on defueled cladding with fluences of 6.3 to 11.2 - 10^{22} n/cm^2 (E > 0.1 MeV) in the 1000 to 1500 psi internal gas pressure range. These tests are included in the test series referenced in Question CS490.8, as Type A tests, see Figure QCS490.8-1. A decision on the release of the above information including report format and a schedule for the release of the data will be submitted by July 31, 1982. A schedule of availability of all such topical reports supporting the fuel, control, and blanket assembly design will be provided by the end of FY '82.

Question CS490.21

In PSAR Section 4.2, the reader is referred frequently to PSAR Section 15.1.2 for details of the CDF fuel evaluation model and its development and qualification. However, the portions of Section 15.1.2 dealing with those subjects appear to have been deleted. Does this presage a decision to abandon the CDF fuel evaluation method for preparation of the PSAR and the operating licenses application? If so, what does the applicant plan to use in its place to evaluate fuel performance?

Response

With respect to the description of the CDF technique, in PSAR Section 15.1.2 the reader is referred to Reference 58 of Section 4.2 as per PSAR Amendment 61.

The CDF remains an integral part of the applicant's current performance analysis methodology and will continue as such.

Question CS490.22

The CDF method for fuel performance evaluation provides a model for determining the accumulated cladding damage due to steady state operation and all anticipated transient events plus one unlikely event at the end of life, and includes auxiliary models to account for cladding wastage, corrosion, and irradiation damage. All of these models, however, appear to depend on input from other sources as to plenum pressure, fuel cladding mechanical interaction loads, time-temperature history, etc. The manner in which this input is generated is also important to the validity of the method. Was the generation of input data for determination of the transient limit curves (TLC's) accomplished in a manner consistent with the generation of data for individual events that were compared with the TLC's.

Response

The input items and methods used to generate the Transient Limit Curves are required to be consistent with the items and methods used to describe the individual events.

Question CS490.23

The criterion for preservation of coolable geometry for all reactor design basis accidents in extremely unlikely events is no sodium boiling. The coolant saturation temperature at the top of the CRBR core is about 1800°F (1255K). Presumably, therefore, no phenomenon has been identified up to 1800°F that could affect coolable geometry. However, there may be a mechanism to compromise coolable geometry short of coolant boiling under loss-of-flow conditions. In the space between 1600 and 1800°F, significant numbers of end-of-life fuel pins could breach, releasing large amounts of fission gas. Studies have shown that at full flow, release of all of the gas in the fuel pins in one subassembly at the end-of-life could uncover the portion of the subassembly, or the top part of it, for approximately 0.1 to 0.2 seconds. Presumably, the cladding that was uncovered would be without cooling during this time. The uncovered time would be much less than the approximate 0.8 seconds without cooling required at full power to reach the cladding solidus temperature. However, under loss-of-flow conditions (low flow), the time some portion of the core would be uncovered would undoubtedly be much longer, probably more than long enough to melt cladding at full power.

At the other extreme, if the power were instantaneously reduced to zero from full power, the fuel and cladding with no cooling would equilibrate to a temperature above the cladding solidus for all powers above about 20 KW/m. It therefore, follows that indefinite loss of cooling is not necessarily tolerable even with an instantaneous scram. In short, the existence of some combination of flow coastdown, residual heat generation rate, and residual stored energy that would culminate in cladding melting cannot be ruled out now for a loss-of-coolant event that penetrates the temperature space between 1600°F and coolant saturation.

Therefore, a no-boiling limit does not necessarily preclude loss of coolable geometry under loss-of-flow conditions. Rather, protection against loss of coolable geometry is ensured by scramming the reactor rapidly enough to avoid breach of any fuel pins. With these considerations, explain the adequacy of the no-boiling limit for undercooling events. The fact that there are no identified protected loss-of-flow events in which cladding (let alone coolant) exceeds 1600°F for end-of-life (high plenum pressure) fuel pins does not answer this question.

Response

Protection against loss of coolable geometry is ensured by scramming the reactor rapidly enough to prevent melting of cladding. The no-boiling guideline is adequate to ensure no cladding melting for all design basis events.(1)

The question specifically addresses a postulated, extremely unlikely undercooling event in which cladding breach occurs leading to fission gas release and a consequent degradation of cladding cooling. The concern expressed is that this degradation of cooling might lead to cladding melting and thus loss of core coolable geometry. An enveloping event involving cladding breach has been evaluated and maintenance of core coolable geometry

demonstrated. A summary of this evaluation is provided in the following paragraphs. A more detailed discussion of the evaluation is being prepared for inclusion in the PSAR (Section 15.1.4) in the near term.

Accident Assumptions

Although the question only addressed undercooling events, it was assumed that a large increase in reactor power (due to a 60c step reactivity insertion) occurs concurrent with a flow coastdown in all 3 PHTS loops. It was postulated that the primary reactor shutdown system fails completely so that reactor shutdown depends on the secondary shutdown system. It was further postulated that the secondary control assembly (SCA) with the highest worth failed to insert and that the SCAs which did insert did so with a speed reduced to account for conservatively determined effects of a Safe Shutdown Earthquake.

Analysis

An analysis was performed assuming failure of all fuel rods in the hot subassemblies at various points in the reactor cycle, with ruptures assumed at the top-of-core location. It was conservatively assumed that while fission gas blankets a pin, there is no cooling of the affected cladding.(2) The flow transient due to the fission gas release lasts only approximately 0.2 seconds before the coolant flow velocity is restored. There is a sufficient margin to coolant saturation temperature that the coolant re-enters all coolant channels.

Conclusions

The effect of temporary loss-of-cooling due to fission gas release would not result in cladding melting.

Summary

Assurance of core coolable geometry requires reactor shutdown sufficiently rapidly to avoid cladding melting. The no-sodium boiling criterion assures that the cladding does not reach its melting temperature. A postulated event which assumes that fission gas release degrades cladding cooling by temporarily removing the sodium coolant does not result in cladding melting and thus does not result in loss of core coolable geometry.

(1) In fact, prevention of sodium boiling may be an overly conservative guideline because there is considerable experimental data which demonstrates that at low power levels, no cladding melting occurs even in the event of sodium boiling (References QCS490.23-1 and 2).

(2) Experimental and analytical data show that introduction of vapor into a channel does not remove all cooling from the cladding (References QCS490.23-3 and 4). The mitigating effects which occur in two-phase flow were not considered in this analysis.

References: (QCS490.23)

1. J. L. Wantland, P. W. Garrison, W. R. Nelson, et al., "Sodium Boiling Incoherence in a 19-Pin Wire-Wrapped Bundle," in Proceedings of the International Meeting on Fast Reactor Safety Technology, Vol. 4, pp. 1678-1685, American Nuclear Society, LaGrange Park, IL (1979).

2. J. F. Dearing and S. D. Rose, "Two-Dimensional Modeling of Sodium Boiling in the W-1 Sodium Loop Safety Facility Experiment," Trans. Amer. Nucl. Soc., 39, pp. 1067-1069 (1981).

3. J. M. Henderson, et al., "W-1 SLSF Experiment Final Report," TC-2050-R1, September 1981.

4. G. Hoeppner, F. E. Dunn, and T. J. Heames, "The SAS3A Sodium Boiling Model and Its Experimental Basis," Trans. Amer. Nucl. Soc., 20, pp. 519-521 (1975).

Question CS490.24

The W-2 test is a slow, overpowered test (about 5 cents/s ramp rate) conducted on full length FFTF geometry fuel pins in the Sodium Loop Safety Facility (SLSF) by the Hanford Engineering Development Laboratory (HEDL). It has not been fully examined or analyzed; nevertheless, the test has several important implications for the CRBR.

First, there is the puzzle of very early cladding breaches, possibly as early as ten seconds into the transient, and with a breach definitely confirmed at about 15 seconds into the transient. These early failures were unexpected because of the low fluence that had been accumulated by the cladding.

Second, gross fuel expulsion occured about as predicted by all of the prediction methods (as to time) at about 22 seconds into the transient. However, the site of the expulsion was apparently at axial midplane, which was unexpected.

Third, it is speculated that the site of expulsion may have been influenced by the early failure, which is presumed to have occured at midplane.

The applicant is requested to comment on: 1) the implications of the early cladding breaches with respect to the adequacy of performance evaluation models in cladding failure criteria being used for the CRBR, and 2) the implications of the midplane site of the fuel expulsion and of the influence the early failure may have had on the location of the site, for beyond-design energetics.

Response

1) Evaluation of the W-2 Sodium Loop Safety Facility (SLSF) test was not intended to be used by the CRBRP as a primary requisite to test the validity of the CRBRP methodology in predicting incipient failure threshold (time). Since the completion of the test, considerable effort has been expended by the safety community reviewing the test results, however, complete test examination and interpretation of test instrumentation has not been reported in the open literature, although a preliminary data report is available. Once the W-2 test has been fully examined and it can be determined that the test will provide a useful benchmark relative to predicting cladding breach initiation, the incipient failure threshold time can be evaluated using the CRBRP methodology. A schedule for the release of the available testing information will be provided to NRC by July 31, 1982.

2) The TOP event with fuel expulsion at the core midplane has been analyzed extensively, and the results are documented in Reference QCS490.24-1. The analyses have shown that the midplane fuel expulsion would not result in a sustained superprompt critical excursion, whether fission gas or fuel

vapor pressure causes the fuel expulsion. Reference QCS490.24-1 also contains the results of an alternative SAS/FCI analysis to provide insite into the margin available. This less rigorous analysis assumed the superprompt critical excursion based on SAS/FCI calculations at near prompt critical, despite the fact the SAS/FCI calculations at such conditions were considered unrealistically conservative (Reference QCS490.24-2). The resulting work energy was calculated to be 33 MJ at sodium impact with the reactor head, which is well below the SMBDB value at 101 MJ.

The NRC question speculated that the site of fuel expulsion in the W-2 test may have been influenced by the early cladding breach which was not predicted by current analytical models. This implies that the fuel expulsion site may not be determined accurately within the current models. To address the implication, PLUTO2 calculations have been performed to confirm that the midplane fuel expulsion, which has been analyzed as mentioned above, is the most energetic case. The results of these PLUTO2 calculations are plotted in Figure QCS490.24-1. Examination of Figure QCS490.24-1 shows that the midplane fuel expulsion yields essentially the highest peak positive reactivity feedback from fuel motion. Therefore, it can be said that an early cladding breach may cause at worst fuel expulsion at the midplane, which has been analyzed from the standpoint of the whole core response (Reference QCS490.24-1).

References:

QCS490.24-1 S. K. Rhow, et al., "An Assessment of HCDA Energetics in the CRBRP Heterogeneous Reactor Core, "CRBRP-GEFR-00523, December 1981.

QCS490.24-2 J. L. McElroy, et al, "An Analysis of Hypothetical Core Disruptive Events in the Clinch River Breeder Reactor Plant," CRBRP-GEFR-00103, General Electric Co., April 1978.

Figure QCS490.24-1

PLUTO2 Prediction of Peak Fuel

Motion Reactivity vs. Failure Location

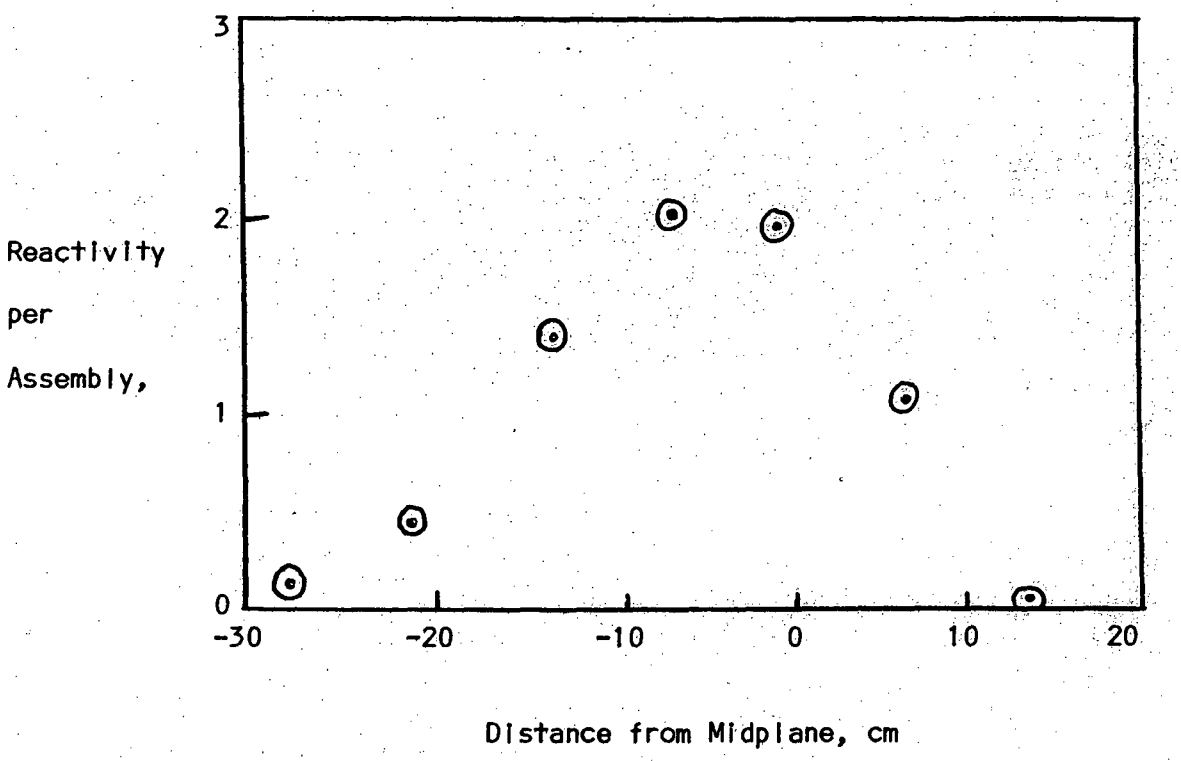

Question CS490.25

Plenum pressures for the FFTF were determined for design purposes assuming 100% release of fission gas. However, the CRBR takes credit for retained fission gas, predicting the fraction of release using a correlation to data (PSAR page 4.4-40). In developing the correlation, were peak or average values of linear heat rating and burnup used to represent the overall pin? If peak values were used, will not the correlation underpredict the fractional release? This would not necessarily be detected by comparing predicted with observed values in Table 4.4-13 unless the pins in Table 4.4-13 had axial power distributions that were signficantly different from those of the calibration pins listed in Table 4.4-12. Were the predictions shown in Table 4.4-13 made for nominal parameters or 2 sigma parameters?

Response

Fission gas release analytical models and experimental data were not available in the late 60's at the time of FFTF design, thus the only alternative was to conservatively adopt 100% release.

In CRBRP design, empirical models derived from experimental data are used to calculate the fractional release from unrestructured fuel. One hundred percent release is still assumed from restructured fuel. In evaluating the release from the unrestructured fuel, the entire fuel column, axially and radially, is considered; the fuel temperature distribution is calculated, restructuring isotherms are determined and the local fractional release is calculated from empirical correlations (which are functions of linear power rating and burnup). The local release is then integrated over the entire fuel to obtain the total release. Thus, the actual distribution (not a peak or an average value) of the linear power and burnup is used. Similarly, the experimental pins used for calibration and verification were characterized in detail, using their actual power/burnup distribution. Release calculations were done using exactly the same procedure as for CRBRP design pins and compared with the measured release, as reported in PSAR Sectioin 4.4.2.8.16. The NICER code, which adopts simplified models from the LIFE code, was used to perform these calculations. Predictions of data were therefore made using nominal parameters. Uncertainties in fission gas release predictions were obtained through comparative regression analysis of predictions versus measurements. The uncertainty on fractional fission gas release is only one of the uncertainties considered in evaluating the plenum pressure. Uncertainties on plenum temperature, plenum volume, fission gas production (linear power and burnup) and fission gas yield are also considered, in addition to the effect of residual gases, as discussed in Section 4.4.3.2.4. The 2o level of confidence is used in design predictions of the fission gas plenum pressure.

Finally, it must be pointed out that for the highest power/temperature pins, nominal +2σ fission gas release is equivalent to 100% release (see Figure 4.4-30). Only for the "cold" pins is the calculated 2o release less than 100%. Use of a 100% release on these pins would have resulted in an overcooling requirement (see orificing philosophy discussion in Section 4.4.2.5). The advantage of the CRBRP method is that by no "overdesigning" the cold pins, flow can be saved and this "saved" flow is allocated where most needed, i.e., to the hot pins. The hot pins thus receive more flow than they would if a 100% release assumption were used throughout the core and, therefore, the CRBRP approach is not only more realistic than the FFTF, but also more <u>conservative</u>.

Question CS490.26

What is the predicted plenum pressure for the absorber rods? How do predicted pressures compare with test data on absorber rods?

Response

New B_4C test data (see Question CS490.28) is currently under evaluation. Preliminary correlations from these data predict PCA pin pressures of 3600 psi at 275 FPD for the peak power pin. Verification of B_4C helium release correlations will be obtained from PCA irradiation Test in FFTF.

Question CS490.27

It appears that the CDF method for fuel pin performance evaluation is primarily oriented toward prediction of design life. Is the method used for evaluating the extent of damage short of design life, or is it used strictly as a fail, no-fail indicator? In applying the CDF method, is the 1.0 for design life partitioned into separate allocations for steady-state and/or anticipated transients?

Response

The CDF method, as employed in PSAR Section 4.2, provides both an indication of cladding damage prior to achieving design goals as well as an indicator of adequate performance vis-a-vis the preclusion of cladding failure.

The CDF is never partitioned into separate allocations for steady-state and/or anticipated transients.

Question CS490.28

Please provide the available B_4C test data and documentation for the tests identified in Table 4.2-46A, PSAR page 4.2-413, as supporting the CRBR control assembly design. What revelant experience has been gained thus far in FFTF startup testing and operation with regard to CRBR control assembly design?

Response

The B_4C tests, listed in Table 4.2-46A have been completed and the data is currently under review. Final correlations on B_4C pellet swelling and helium release will be incorporated in the Nuclear System Materials Handbook.

During FFTF startup and operation, the following results were obtained:

1. Measured scram insertion times are within requirements, and are in good agreement with predictions.

2. Measured control assembly worths were well predicted and meet or exceed requirements.

Because of the similarity between FFTF and CRBR designs and analysis methods, these results provide confidence that similar results will be obtained for CRBR.

Question CS490.29

Although not necessary for review of the PSAR, all codes used in design and evaluation of the fuel and blanket rods will need to be reviewed. Based on our current understanding, the codes to be reviewed will include.

FURFAN

LIFE-III

any of the LIFE-IV series

anticipated to be used for the PSAR

FORE-2M

FRST

Response

The applicant acknowledges that codes used in design and evaluation of the fuel and blanket rods may need to be reviewed by NRC during the FSAR review. Appendix A of the PSAR provides existent information for the various codes cited. Relevant information for the codes will be made available at the time of FSAR submittal to facilitate NRC review.

Question CS490.30

The coolant flow rate is automatically cut back upon the initiation of a reactor scram to minimize thermal shock. Are there any conceivable circumstances under which a scram could be called for, the rods fail to be inserted, and the flow cutback is still executed? What is the outcome of such an event?

Response

In view of the complete redundancy and diversity of the design of the CRBRP shutdown systems, no such circumstances are conceivable. However, hypothesized events similar to the one discussed in the question are analyzed by the CRBRP in the beyond-design-base evaluations and are documented in References 10a and 10b of Section 1.6 of this PSAR.

Question CS490.31

On page 11 of Reference 58 to PSAR Section 4.2 it states that "...all possible emergency events are divided into two broad categories according to the physical processes involved, viz., undercooling and rapid reactivity insertions." The definitions of the two categories appear to exclude any consideration of transient fuel cladding mechanical interaction on a slow time scale, that is, on a time scale much greater than one second. Yet, the possibility of such occurring clearly cannot be ruled out. In fact, all reactivity insertion (or overpower) events are fundamentally different from loss-of-flow events regardless of speed. How, the, does the CDF model evaluate "slow" reactivity insertion events?

Response

The question refers to the observation that unterminated transient tests on fuel rods in TREAT resulted in a decrease of the power at the failure threshold with decreasing ramp rates. CRBRP is protected against reactivity insertions at very slow ramp rates. The automatic control features preclude slow reactivity ramps transients exceeding 103% of full power. This band is a combination of a ± 2% dead band on power oscillation plus a ± 1% band due to calorimetric power measurement uncertainty. In the manual control mode, the slowest reactivity ramp is 0.05%/sec. The primary trip is activated after 300 seconds into the transients when 15% overpower is being exceeded. In this time-power envelope of 115% power and 300 sec. time all combinations of power ramp rates are possible.

The CDF model documented in the PSAR Section 4.2 does not employ a strain rate sensitive transient CDF model. The worst possible slow reactivity insertion event, the U2b transient, is enveloped by a rapid insertion transient followed by a 300 sec. hold of power. Such a transient accumulates larger transient damage than the postulated slow reactivity insertion transient. This conclusion is based on a preliminary comparison of the transients calculation and assumptions presented in the PSAR with a transient damage model which includes a strain rate sensitive cladding damage model. Preliminary results indicate that a fast power ramp results in higher fuel-cladding mechanical interaction stresses than slow reactivity stresses.

During the 300 second hold of power, the maximum stress relaxes and the strain rate decreases, but not sufficiently to result in lower damage than accumulated during a slow power increase as a result of slower cladding strain rate. An updated transient CDF model which incorporates cladding strain rate effects is currently under development and will be discussed as part of the PSAR.

Unterminated transient tests were performed with the objective of determining failure threshold as a function of power ramp rate. Preliminary results have been published in Reference QCS490.31-1. Additional slow overpower transient tests are planned in the Operational Transient Test (ORT) program in EBR-II. A preliminary description of the program objectives is presented in Reference QCS490.31-2. The ORT program will include a simulation of the CRBRP U2b event with fast power ramp rates and a subsequent power hold of 300 sec., in addition to the slow ramp rate tests described in Reference QCS490.31-2.

The steady-state and transient program plans will be available in a summary description document before the end of FY '82 including the EBR-II ORT program.

References: QCS490.31-1, "Oxide Fuel Performance During Normal Operation and Off-Nominal Events", E. T. Weber, et al, Reactor Safety Aspects of Fuel Behavior, ANS Topical Meeting, August 2-6, 1982, Sun Valley, Idaho.

QCS490.31-2, "A Program for Operational Transient Testing of Breeder Reactor Fuel", A. Boltax and J. I. Sackett, Reactor Safety Aspects of Fuel Behavior, ANS Topical Meeting, August 2-6, 1982, Sun Valley, Idaho.

Question CS490.32

If for whatever reason, one or more absorber rods breached, and B_4C were washed or eroded out of the breached rods, how would this be detected? What is the maximum reduction in shutdown capability in either the primary or secondary control system that could occur through either burnout or washout at the detection threshold? Is any surveillance planned to ensure that the functional capability of neither the primary nor secondary control systems has degraded unacceptably?

Response

There is no system in CRBR designed to detect the rupture of a control assembly pin or the subsequent erosion or washout of the B_4C. This position is supported by the following information:

1. As detailed in Section 15.4.2, the failure of an absorber pin is considered unlikely due to the conservative loads and design criteria used in the design analysis. The only identified mechanism which could cause pin cladding failure is excessive internal pressure, and pin rupture tests have shown that this mechanism produces only pin hole or very fine crack defects. Since pin pressure increases with lifetime, large pin pressures would only occur late in life when the required shutdown reactivity is a minimum.

2. Recent test data from FFTF on irradiated B_4C pellets have shown that for a very large cladding defect (1.0" x 0.1"), a maximum of only 0.16 grams of B_4C were eroded after 50 days in 1000°F sodium, flowing at 5 feet per second. The results of this test, and other tests described in Section 15.4.2 lead to the conclusion that the probability of eroding significant quantities of B_4C from cladding defects is extremely unlikely.

3. Due to the high self-shielding of the enriched B_4C in control assemblies, the loss of small amounts of B_4C would produce no detectable change in control assembly worths. To reduce the worth of a control assembly 1% would require the loss of approximately 150 grams of enriched B_4C.

4. The scram insertion performance and shutdown margin is calculated assuming the most reactive control assembly is inoperative. Therefore, the B_4C from an entire control assembly could be lost without compromising the calculated scram insertion performance or the shutdown margin.

Finally, the position of the operating control rod banks is constantly monitored and compared to the expected position. If significant quantities of B_4C were lost due to cladding rupture of the PCA pins, the operating bank would be withdrawn less than the predicted amount. This trend would be monitored, and the core would be shutdown before the shutdown margin was reduced below an acceptable level.

Question CS490.33

Please show the quantitative delays in effecting a reactor scram starting with the time a real variable or quantity reaches its scram trip point and ending with the time the power just starts to decline.

Response

The time delay in effecting a reactor scram varies with event. Generally speaking, this time delay is the sum of 1) instrument channel, 2) Reactor Shutdown System (RSS), and 3) control rod delays.

The instrument channel delay includes the sensor and transmitter delays. The delays range from 10 msec. for the neutron flux detectors to 5 seconds for the IHX and evaporator outlet thermocouples. Table 7.2-3 summarizes the instrument channel delays used in the Chapter 15 safety analysis.

The RSS delay includes delays from the calculational units, comparators, coincidence and final actuation logic. A delay of 0.1 second conservatively envelopes these individual factors.

The control rod delay includes delays from unlatching and rod insertion speeds. Unlatching time (start of CRDM stator current decay/current interruption to solenoid valves to start of primary/secondary rod motion) is approximately 0.1 second. The time to "turn around" an event (begin reduction of adverse temperature and/or power trends) varies, but can generally be assumed to occur before one dollar of reactivity has been inserted. This occurs within approximately 0.31 and 0.46 seconds after the start of rod motion for the primary and secondary control rods, respectively. Figures 4.2-93 and 4.2-94 provide the minimum primary and secondary scram insertion requirements used in the Chapter 15 safety analysis.

Question CS490.34

It is our understanding that rod bundle-duct interaction can cause substantial cladding stresses, at least for blanket rod bundles. Are these loads considered in evaluating fuel rod performance by either the CDF or the ductility limited strain model? If so, please provide a specific description of how this is done, including examples for both steady-state and transient conditions.

Response

Bundle duct interaction has been postulated to cause substantial local cladding bending stresses. This conclusion is based on rod-bundle duct interaction analysis. The analysis method and some conclusions have been reported in Reference QCS490.34-1. An earlier report, Reference QCS490.34-2, contains details of the analysis method and was submitted to NRC. Cladding principal stresses due to rod bundle duct interaction have been calculated based on conservative assumptions, for example; assuming rigid pellets without gap. These calculated wire wrap stresses or strains are presently not being considered in the cladding damage analyses. Actually, the fuel pellet material does creep significantly at typical CRBRP blanket rod operating conditions and allows local creep deformations of the cladding due to wire-cladding interaction. Cladding profilometry measurements were performed on experimental blanket assemblies WBA-20 and WBA-21 tested in EBR-II to determine the magnitude of the local cladding deformation. Measurements on WBA rods indicate a maximum ovality of 0.6% D/D superimposed on a peak average diametral strain of 1.15% D/D. This information is contained in the final performance test report for these tests. The response to Question CS490.9 gives the status of these tests and a date for a plan to release this information.

Since cladding damage due to rod bundle-duct interaction was of concern, fuel assembly and radial blanket assembly tests are planned which will exhibit significant rod bundle duct interaction. These tests are included in the test plans which will be provided in response to Question CS490.15 for the FFTF fuel surveillance program, in response to Question CS490.9 for blanket irradiation program, and as part of the irradiation test program in support of CRBRP.

However, the initial concern about the damaging effect of wire wrap-cladding interaction on cladding performance decreased because the test assembly P53 in EBR-II with significant rod bundle-duct interaction did not exhibit a rod failure. In addition, irradiation tests on fuel assemblies with 217 rods and very severe rod bundle-duct interaction did not result in cladding failures (see Reference QCS490.34-3).

In summary, no cladding failures have been attributed to wire wrap-cladding interaction. One of the reasons may be that cladding failures are caused by exceeding membrane stress and strain limits. Cladding loads due to wire wrap-cladding interaction are compressive and reduce the local membrane stress and strain but introduce secondary bending strains which relax due to creep as indicated by the blanket irradiation tests in EBR-II.

Because of the above considerations and since testing to evaluate these effects are planned, the calculated wire wrap-cladding stresses or strains are presently not being considered in the cladding damage analysis.

References: QCS490.34-1, E. C. Schwegler, Jr., "Cladding Response to Uniform Radial Compaction of Clinch River Breeder Reactor Plant Rod Bundles", Nuclear Engineering and Design 61 (1980) pgs. 223-235.

QCS490.34-2, CRBRP-ARD-0149, E. C. Schwegler, "Wire Wrap-Cladding Interaction in LMFBR Fuel Rods", dated December 1977.

QCS490.34-3, J. Rousseau, et al, "Deformation of Fuel Rods with Wire Spacer in the Presence of Swelling and Creep Due to Irradiation", International Conference on Irradiation Behavior of Metallic Materials for Fast Reactor Core Components, Corsica, France, June 4-8, 1979, pg. 291.

Question CS490.35

Many computer codes were used by the CRBRP designers to perform the thermal and hydraulic analyses presented in section 4.4 of the CRBR PSAR. Some of these codes are proprietary and some were developed by the CRBRP or its contractors and are not widely available. To evaluate the applicability of these codes to the thermal and hydraulic analyses presented in section 4.4, substantially more information is needed than is presented in section 4.4, in Appendix A, and in the references cited in Appendix A. Therefore, please provide code manuals and/or detailed descriptions along with code listings for the following codes.

a. CATFISH
b. CORINTH
c. COTEC
d. CRSSA
e. DEMO
f. FATHOM-360
g. FATHOM-360S
h. FLODISC
i. FORE-2M
j. NICER
k. OCTOPUS
l. TRITON

Response

Since last submission of the CRBRP PSAR, two of the codes in the above list have been superseded. The CØRINTH code has been replaced by the DOE national program code CØBRA-WC. Also, the FLØDISC code has been replaced by CØBRA-WC for analysis of very low flow (natural circulation) conditions. In the flow range from 100% to ~ 50% flow the FLØDISC code has been replaced by CATFISH.

The CRAB-II code which analyzes the primary control assembly steady state hydraulics, scram dynamics and flotation behavior should be added to the list.

Descriptions of the major features, models applications and typical results of the above codes have been reported in the open literature; a list of these papers/articles/reports is attached.

An extensive validation effort is ongoing for all of the above codes.

Manuals and validation reports for all the above codes will be provided prior to FSAR submittal. Appendix A will be modified to reflect the above changes.

AVAILABLE OPEN LITERATURE PUBLICATIONS

CATFISH

1) M.D. Carelli and J.M. Willis, "An Analytical Method to Accurately Predict LMFBR Core Flow Distribution", Trans. Amer. Nucl. Soc., 32, pp. 575-576, 1979.

2) M.D. Carelli and J.M. Willis, "Analytical Modeling of Core Hydraulics and Flow Management in Breeder Reactors", Proceedings of the XVIII Congress of the International Association for Hydraulic Research, Cagliari (Italy), September 10-14, 1979.

CØTEC

1) E.H. Novendstern, "Mixing Model for Wire Wrap Fuel Assemblies", Trans. Amer. Nucl. Soc., 15, pp. 866-867, 1972.

2) E.H. Novendstern, "Turbulent Flow Pressure Drop Model for Fuel Rod Assemblies Utilizing a Helical Wire Wrap Spacer system", Nucl. eng. Design, 22, pp. 19-27, 1972.

3) Y.S. Tang, M.R. Yeung and M.D. Carelli, "A Core Design Subchannel Analysis Code Calibration and Validation", to be presented at the ANS Annual Meeting, Los Angeles, June 1982.

4) F.C. Engel, R. A. Markley and B. Minushkin, "Buoyancy Effects on Sodium Coolant Temperature Profiles Measured in an Electrically Heated Mockup of a 61-Rod Breeder Reacter Blanket Assembly", ASME-78-WA-HT-25.

5) F.C. Engel, R.A. Markley and B. Minushkin, "Heat Transfer Test Data of a 61-Rod Electrically Heated LMFBR Blanket Assembly Mockup and Their Use for Subchannel Code Calibration", in Fluid flow and Heat Transfer Over Rod or Tube Bundles, pp. 223-229, American Society of Mechanical Engineers, New York, 1979.

6) F.C. Engel, R.A. Markley and B. Minushkin, "The Effect of Heat Input Patterns on Temperature Distribution in LMFBR Blanket Assemblies", ANS/ASME International Topical Meeting on Nuclear Reactor Thermal-Hydraulics, Saratoga Springs, NY, October 1980, NUREG/CP-0014, Vol. 3.

DEMØ

1) W.H. Alliston, "LMFBR Demonstraton Plant Simulation Model (DEMØ)", CRBRP-ARD-0005, February 1978.

FATHØM 360 AND FATHØM-360S

1) M.D. Chuang, M.D. Carelli, C.W. Bach and J.S. Killimayer, "Three-Dimensional Thermal-Hydraulic Analysis of Wire Wrapped Rods in Liguid Metal Fast Breeder Reactor Core Assemblies", Nuclear Science and Eng., 64, pp. 244-257, 1977.

2) M.C. Chuang, M.D. Carelli and M.R. Yeung, "Distributed Parameter Analyses of the Thermal-Hydraulic Behavior of Wire Wrapped Rods in LMFBR Cores", paper submitted to the 2nd International Topical Meeting on Nuclear Reactor Thermalhydraulics, Santa Barbara, January 1983.

NICER

1) M.D. Carelli, C. W. Bach and R.A. Markley, "Analytical Techniques for Thermalhydraulics Design of LMFBR Assemblies", Trans. Amer. Nucl. Soc., 17, pp. 423-424, 1973.

ØCTØPUS

1) M.D. Carelli, A.J. Friendland, C.W. Bach and R.A. Markley, "An Optimized Method for Orificing LMFBR Cores", Trans. Amer. Nucl. Soc., 26, pp. 437-438, 1977.

2) M.D. Carelli and C.W. Bach, "Orificing Interchangeable LMFBR Cores", Trans. Amer. Nucl. Soc., 34, pp. 268-270, 1980.

TRITØN

1) M.D. Carelli and C.W. Bach, "Thermal-Hydraulic Analyses for CRBRP Core Restraint Design", Trans. Amer. Nucl. Soc., 21, pp. 393-395, 1975.

2) F.C. Engel, B. Minushkin and R.A. Markley, "Comparisons of Design Code Predictions with LMFBR Blanket Heat Transfer Test Results", American Nuclear Society and the European Nuclear Society November 1980 International Conference, Washington, D.C.

CRAB and CRAB-II

1) M.D. Carelli, C.W. Bach and R.A. Markley, Hydraulic and Scram Dynamics Analysis of LMFBR Control Rod Assemblies", Trans. Amer. Nucl. Soc., 16, 1, pp. 218-219, 1973.

2) M.D. Carelli, H.W. Brandt, C.W. Bach and H.D. Kulikowski, "LMFBR Control Rods Scram Dynamics", Trans. Amer. Nucl. Soc., 18, pp. 278-279, 1974.

3) M.D. Carelli, L.A. Baker, J.M. Willis, F.C. Engel and D.Y. Nee, "CRAB-II: A Computer Program to Predict Hydraulics and Scram Dynamics of LMFBR Control Assemblies and its Validation", to be presented at the ANS Topical meeting on Reactor Physics and Core Thermal-Hydraulics, Kiamesha Lake, NY, September 1982.

CØBRA-WC

1) T.L. George, K.L. Basehore, C.L. Wheeler, W.A. Prather and R.E. Masterson, "CØBRA-WC: A Version of CØBRA for Simple-Phase Multi-Assembly Thermal-Hydraulic Transient Analysis", PNL-3259, July 1980.

2) E.U. Khan, W.A. Prather, T.L. George, J.M. Bates, "A Validation Study of the CØBRA-WC Computer Program for LMFBR Core Thermal-Hydraulic Analysis", PNL-4128, December 1981.

FØRE-2M

1) J.N. Fox, B.E. Lawler and H. R. Butz, "FØRE-II: A Computational Program for the Analysis of Steady State and Transient Reactor Performance", GEAP-5273, September 1966.

2) J.V. Miller and R.D. Coffield, "FØRE-2M: Modified Version of the FØRE-II Computer Program for the Analysis of LMFBR Transients", CRBRP-ARD-0142 (available from US/DOE Technical Information Center), November 1976.

Question CS490.36

Part A: In the uncertainty analyses presented in Section 4.4.3.2 of the CRBR PSAR, the rationale used to determine 2 and 3 uncertainty factors for thermal and hydraulic data is discussed. The discussion does not include a quantitative justification for non-statistical factors nor does it provide information about the methods used to determine statistical factors. Please indicate for the data presented in Tables 4.4-18A through 4.4-31 which of the uncertainty factors are determined statistically and which are not. Also, for the non-statistical factors please provide a quantitative basis and for the statistical factors please provide a detailed description of the methods used and of the data base.

Part B: In addition to uncertainties in material property data, design tolerances, and similar data there are uncertainties associated with the numerical methods (including model) used in the various computer codes. Are uncertainties in numerical methods (including models) included in the uncertainty factors presented in Tables 4.4-18A through 4.4-31? If uncertainties in numerical methods are included in the overall uncertainties, please provide a detailed mathematical description of the methods used to determine these uncertainties. If numerical method uncertainties are not accounted for, please explain why they are not.

Response

A topical report "CRBRP Core Assemblies Hot Channel Factors Preliminary Analysis", CRBRP-ARD-0050 has been submitted to the NRC and was issued by TIC/DOE in February 1980. This report discusses the methodology, rationale and bases of the hot channel/spot factors used in the CRBRP core assemblies thermofluids design.

The specific questions are fully covered in the report.

Question CS490.37

According to the CRBR PSAR (Section 4.4.2.5) the procedure used to determine assembly orificing for the heterogeneous core is based on a 3 loop natural circulation transient with an imposed maximum coolant temperature of 1550°F. Using this method, minimum required flows are calculated and used to determine flows for 12 orificing zones. The above procedure resulted in a minimum core flow of 93.07% of total flow out of a maximum allowed core flow of 94% of total flow. What would the result have been if, instead of using PEOC, THDV at 3σ had been used to define the temperature T_M?

Response

The 1550°F maximum coolant temperature was only a conservative guideline to quantify transient constraints to be accounted for in the orificing process which optimizes flow allocations. Other constraints, i.e., lifetime, outlet temperature and gradients are also considered and subsequently constraints are quantitatively expressed on an equal basis. The minimum flow required to satisfy the most restrictive of the various constraints is then calculated and the orificing configuration is selected. Since all the constraints are put on an equal basis, the orificing configuration and relative flow allocation among the various zones is completely independent whether PEOC or THDV plant conditions are considered. In particular, T_M is a 2σ, PEOC temperature; the equivalent 3σ, THDV temperature is reported in Table 4.4.3 of the CRBR PSAR. The same orificing would have resulted using either one of the two temperatures, provided the other constraints were on the same basis (i.e., 2σ, PEOC or 3σ, THDV). Using the flows selected in the orificing process, the resulting T&H parameters (e.g., temperatures, flow and pressures) are then quantitatively predicted in detail for all the core assemblies as described in Section 4.4.3.3.

Question CS490.38

In Section 4.4.2.6 of the CRBR PSAR there is a discussion of reactor coolant flow distribution at low flow conditions. It is stated there that a system of three computer codes (DEMØ, CØBRA-WC and FØRE-2M) was used to assess the effect of all natural circulation cooling on the maximum coolant temperatures in CRBR. Please provide a detailed description of the geometry modeled by each of the codes and of the data coupling between them, i.e., output used as input, for the calculations discussed in the above section. The geometry model information should include the number and type of assemblies modeled, the number of fuel or blanket rods in each assembly that are modeled explicitly, the LIM model, and the UIS model. Also, please provide detailed results, i.e., temperature distribution and flow rates as a function of time, for the calculations used to arrive at the conclusions presented. No experimental evidence of natural circulation cooling for the CRBR heterogeneous core geometry is presented in this section. Are there any experimental data? If not, what type of experiments are planned to demonstrate the conclusions presented?

Response

Before presenting the direct response of Question CS490.38 concerning the Section 4.4.2.6 (i.e., Reactor Coolant Flow Distribution at Low Reactor Flows) information, the following three points need to be made:

- A detailed DEMØ, CØBRA-WC and FØRE-2M model of CRBRP has not been used for the Section 4.4.2.6 analyses. Section 4.4.2.6 will be amended to clarify this point.

- The Natural Circulation transient is the only event where significant flow redistribution would occur; other design events have 57.5% full flow from pony motors and buoyancy effects are insignificant.

- CRBRP worst case design and safety predictions have neglected the beneficial effects of inter- and intra-assembly flow and heat redistribution with regard to lowering maximum core temperature predictions. Thus, the phenomena described in Section 4.4.2.6 have not been used in the PSAR Nautral Circulation predictions. Details were explained at the January 26, 1982 NRC/CRBRP meeting and in topical report WARD-D-0308.

With the above facts in mind regarding the Section 4.4.2.6 information, the following discussion provides the response to the question:

- Curves provided in Section 4.4.2.6 and other independent studies (Refs. QCS490.38-1 and 2) which found similar trends exemplify conservatism of neglecting flow and heat redistribution. Information on flow redistribution shown by Figures 4.4-66 and 4.4-67 was calculated by a preliminary model using the CØRINTH code. Figure QCS490.38-1 shows a schematic of the core parallel flow network modeled for these studies. An average channel in each type assembly was analyzed. The LIM model used is described in Sections 4.2 and 4.4. As can be noted in the figure, the UIS was neglected for this initial study. The typical fuel hot rod transient temperature data exemplified on Figure 4.4-68 were calculated for FFTF fuel

rods under natural circulation cooling using the system of computer codes: DEMØ, CØBRA-WC and FØRE-2M, described below. Due to prototypicality of the fuel and system designs, the same trends as found in FFTF would occur for CRBRP.

- CRBRP has a system of three computer codes (DEMØ, CØBRA-WC and FØRE-2M) verified to reduce maximum core temperature predictions from those presented to-date which neglect inter- and intra-assembly flow and heat redistribution. Current analyses (which conservatively did not use the system of three codes) result in a large 150 to 400°F margin to the coolant boiling criterion used for judging natural circulation capability (described in WARD-D-0308 and at the January 26, 1982 NRC/CRBRP meeting for heterogeneous core design). Since the margin to coolant boiling is so large on the conservative basis, there is not need to use the codes for PSAR predictions. However, predictions from this system of codes will be included in the PSAR. Details of the system of three codes (including coupling between them and experimental verification) are provided in "Verification of Natural Circulation in Clinch River Breeder Reactor Plant - An Update". The analysis procedure with regard to the input/output and sequencing between the three codes is shown by Figure QCS490.38-2.

- Figure QCS490.38-3 shows experimental data and results of analyses with DEMØ, CØBRA-WC and FØRE-2M for the highest temperature FFTF fuel rod during a prototypic natural circulation tests. This information was discussed at the January 26, 1982 NRC/CRBRP meeting. The top two curves of this figure show the effect of inter- and intra-assembly flow and heat redistribution reducing worst case temperature predictions such as those in WARD-D-0308. It can be noted that both of these predictions are extremely conservative (due to the uncertainty factors applied) relative to the experimental test data and expected predictions (nominal) gien by the low curves on the figure.

- Extensive experimental data (e.g., core component pressure drop and sodium heat transfer testing in fuel and blanket assemblies over wide range of conditions, decay heat, pump coastdown characteristics, FFTF and EBR-II natural circulation tests, etc.) are already available as described in the report, "Verification of Natural Circulation in CRBRP Plant - An Update".

- Acceptance Test Phase natural circulation experimental will be performed to demonstrate CRBRP natural circulation capability.

References: A) A. K. Agrawal, et al, "Dynamic Simulation of LMFBR Plant Under Natural Circulation", ASME Rapan 79-HT-6, 1979.

B) M. Khatib-Rahban and K. B. Cady, "Establishment of Buoyancy-Induced Natural Circulation in Loop-Type LMFBRs", Trans. Amer. Nucl. Soc., 28, pp. 432-433, June 1978.

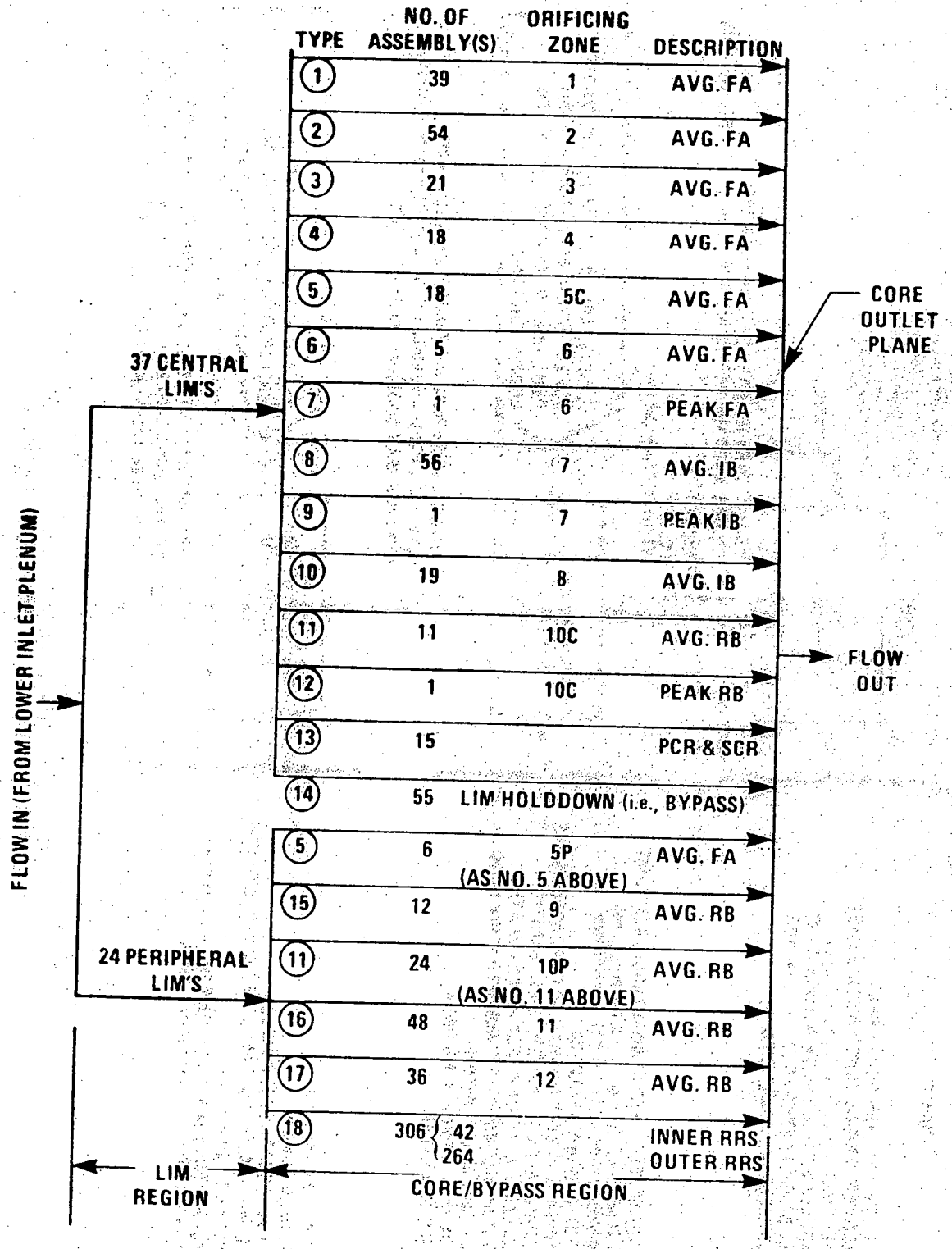

Figure 490.38-1. Corinth Model of CRBR

7102-1

Amend 69
July 1982

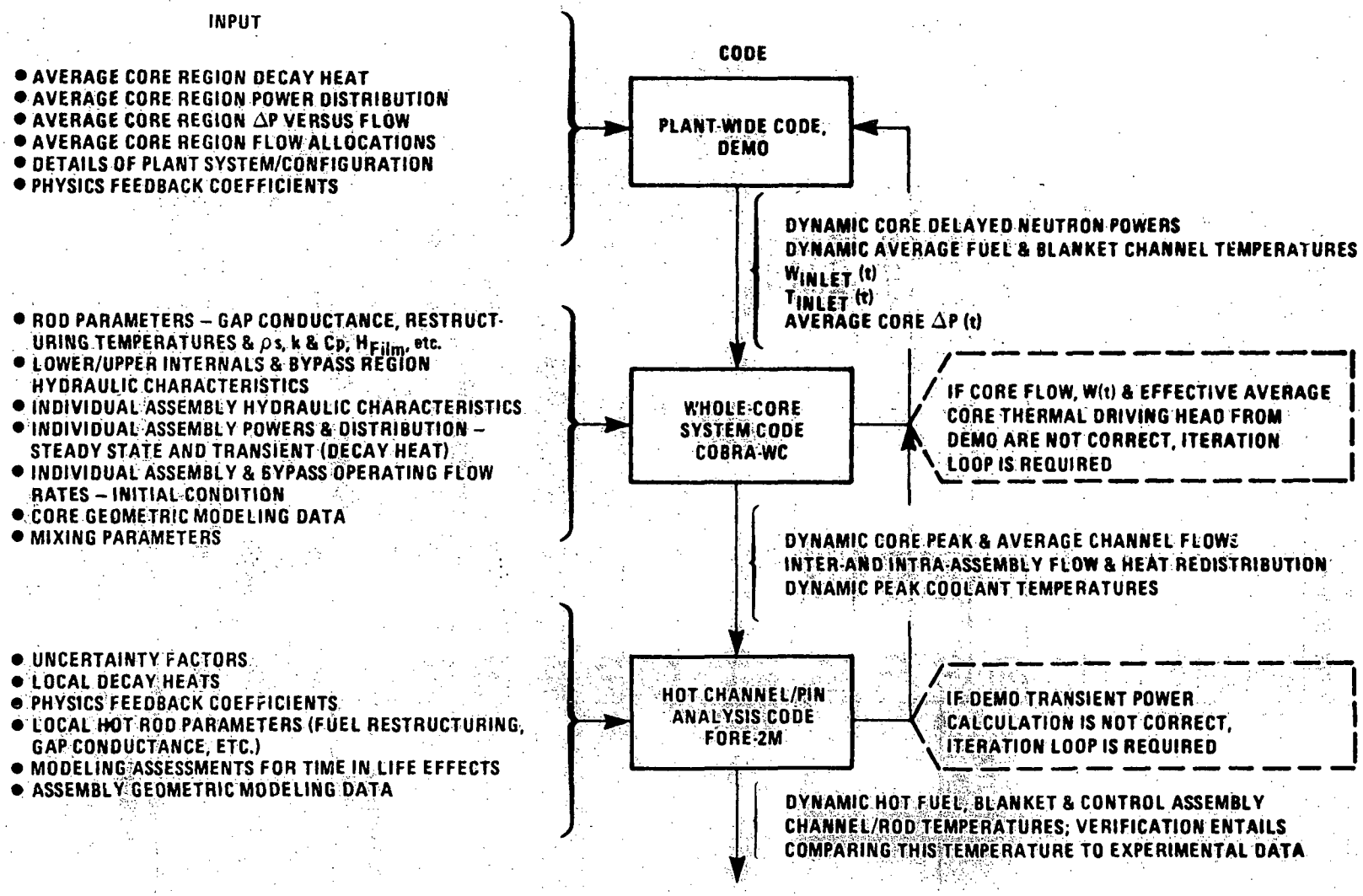

Figure 490.38-2. CRBRP NCVP Analysis Procedure

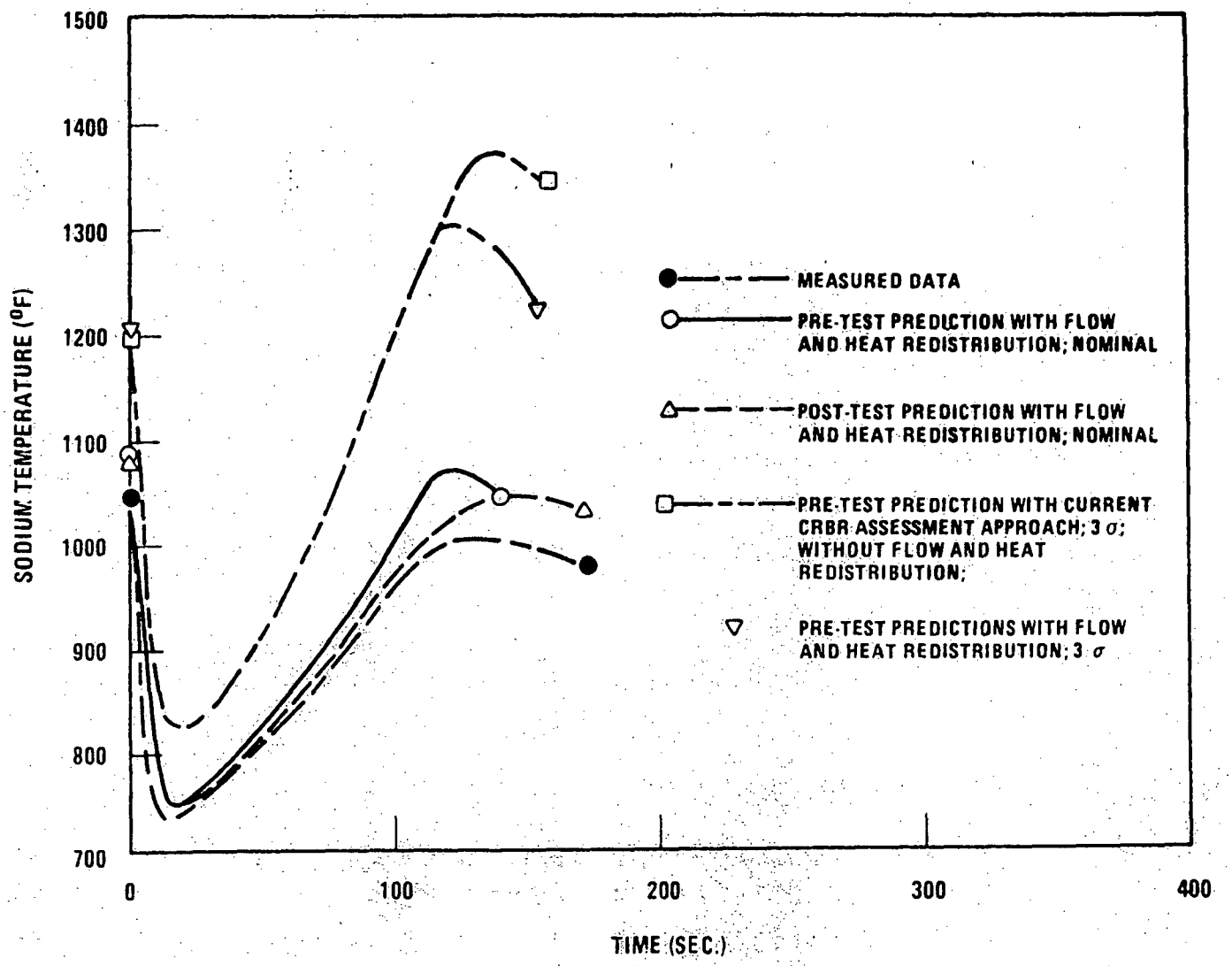

Figure 490.38-3. Measured and Predicted Sodium Temperatures at Top of the Fuel Section, TX1016, for Row 2 FOTA-FFTF (Test Initiated from 100% Power/100% Flow)

Question CS490.39

In Section 4.4.2.8.5 there is a discussion of fuel-cladding gap effects on peak cladding temperatures reached during an undercooling transient. The discussion concludes that under LOF conditions with scram it is conservative to overestimate heat transfer to the cladding early in the transient, i.e., a higher peak cladding temperature will be calculated. Please provide quantitative justification, i.e., transient temperature results, for this conclusion.

Response

The worst case undercooling transient of PSAR Section 15.3 is the "loss of off-site electrical power" event reported in Section 15.3.1-1. This transient has been updated with FØRE-2M in Section 15.1.4 for the heterogeneous core design using a fixed gap conductance model. For fuel assembly #52 which contains the highest cladding temperature hot rod for any core location at any time in life, a maximum cladding temperature of 1455°F was calculated in a 36 basis. In response to the above question, this analysis was repeated with the FØRE-2M variable gap conductance model (both the Section 15.1.4 update and this new evaluation having the same initial gap conductance at time zero). Because of the mechanisms described in Section 4.4.2.8.5 and referred to in the question, a 5°F decrease in maximum cladding temperature was found due to the lowering of the gap conductance from its initial value as the cladding expands proportionately more than the fuel. A comparison of the maximum cladding temperatures for the two cases is given by Figure 490.39-1.

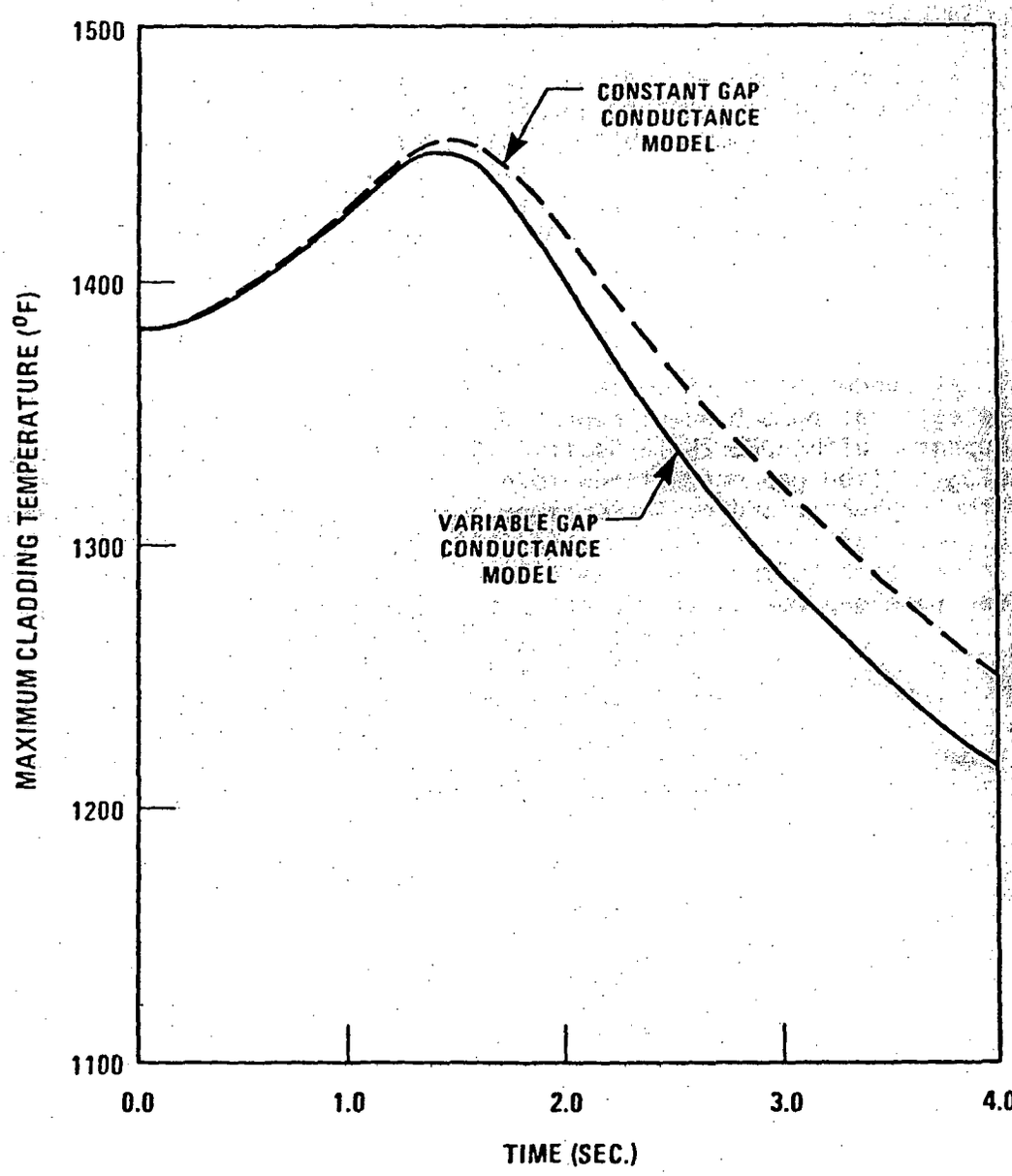

Figure 490.39-1. Maximum Cladding Temperature (3σ) for FA-52 as Calculated With and Without Transient Gap Conductance Variation (Loss of Off-Site Electrical Power Undercooling Transient)

7102-4

Question CS491.1

In Section 3.1, "Conformance with General Design Criteria," there is no design criterion comparable to 10CFR50, Part A, Criterion 28, "Reactivity Limits". Why is this general design criterion not a part of Section 3.1? Are appropriate limits on the potential amount and rate of reactivity increase discussed in this criterion going to be quantitatively specified?

Response

10CFR50, Part A, Criterion 28, "Reactivity Limits" is not a part of Section 3.1 since the CRBRP Design Criterion was established prior to the present 10CFR50, Part A. However, as discussed in Question Response CS421.2, the present CRBRP design fully meets Criterion 28 of 10CFR50, Part A. In Section 3.1, Criterion 23, "Protection System Requirements for Reactivity Control Malfunctions", Criterion 24, "Reactivity Control System Redundancy and Capability", and Criterion 25, "Combined Reactivity control Systems Capability" serve as sufficient criteria for limiting the amount and rate of reactivity increase.

Question CS491.2

Please explain why Criterion 29, "Protection against Anticipated Operational Occurrences", of 10CFR50, Part A is not a criterion in Section 3.1 of the PSAR.

Response

Like Criterion 28, of 10CFR50, Part A, discussed in Question Response CS491.1, CRBRP Criterion 29 was established prior to the present 10CFR50, Part A. Question Response CS421.2 discusses how the CRBRP design fully meets this criteria.

Question CS491.3 (4.2.2.1)

The specific speed of response requirements does not seem to be presented in Section 4.2.2.1.3. Where is it presented?

Response

The PSAR section listed should be 4.2.3.1.3. The specific speed of response requirements are given in PSAR Figures 4.2-114 and 4.2-119.

Question CS491.4 (4.2.3.3)

Why aren't there sufficient calculational uncertainties listed to enable one to judge the fragility of the PCRS and SCRS scram conclusions?

Response

It is not possible to identify and combine statistical uncertainties in the PCRS scram analysis for the constituents which produce the results presented in Figures 4.2-114 and 4.2-119. PSAR Section 4.2.3.3 has been updated to include more recent results, and where possible, calculational uncertainties have been estimated.

PSAR Section 4.2.3.3 will be updated to include more recent results which will consist of the DYNALSS Code verification (comparison between predictions and test results) predicted CRBRP SCRS scram performance and required CRBRP SCRS scram performance. The DYNALSS code is used to predict SCRS scram performance. Where possible, calculational uncertainties will be included in the SCRS scram performance predictions. This information will be incorporated into the PSAR in FY 1982.

Question CS491.5

a) In one case you claim one dollar of reactivity is inserted within .3 seconds after rod motion begins. Why doesn't this agree with the presentation in Figure 4.2-122?

b) Why aren't the treatments of PCRS and SCRS scram parallel?

Response:

a) The applicant has noted the inconsistency and update the discussion in the PSAR.

The scram insertion speed requirements of the SCRS are shown in Figure 4.2-94 and discussed in Section 4.2.3.1 of the PSAR.

Test results to date have indicated that scram reactivity insertion requirements are met.

b) The two shutdown systems are diverse. Design and scram performance requirements have been established for each system. Given the distinct performance requirements for each system, discussion of the scram requirement and predicated scram performance can be made for each system.

Question CS491.6 (4.2.3.4)

Are the PCA position indicators and dampers also being tested?

Which of the tests mentioned in Section 4.2.3.4.1 have been completed and documented?

Response

The PCA position indication systems and the PCRDM dashpots were included in the system level tests. PSAR Section 4.2.3.4.1 has been revised to reflect this information.

The following tests of Section 4.2.3.4.1.1 (Primary Control Rod System) have been completed:

A. Component Tests

1. Dynamic Seismic Friction Test - Test report not issued

2. Control Assembly Hydraulic (Flow) Test - Test report not issued

3. Control Assembly Pin Compaction Test - Test report not issued

4. Control Assembly Rotational Test Joint - Documentation complete

5. B_4C Data Test - See response to Question CS490.28

6. Friction and Wear Tests - Documentation complete

7. Control Assembly Analytical Methods - Test report not issued

B. System Level Tests - Test report not issued

C. PCA Irradiation Test to begin in FFTF Core 2

The following tests of Section 4.2.3.4.1.2 (Secondary Control Rod System) have been completed except as noted:

A. Latch - Tests - Documentation Complete[1]

B. Damper Tests - Test report not issued

C. Position Indication Tests - Test report not issued

D. SCA Status Flow Tests - Test report not issued

E. Prototype Tests - Test report not issued

NOTE: While SCRS Prototype tests P-1, P-2, and EL-4 have been completed, SCRS Prototype tests P-3 and P-4 tests are in progress.

F. Coil Cord Tests - Test report not issued

G. Latch Seal Tests - Test report not issued

H. Nosepiece Flow Tests - Documentation complete[2]

I. Argon Control System - Test report not issued

1. Documentation includes, "CRBRP-GEFR-00524, "SCRS Latch Assembly Scram Cycling Test Final Evaluation Report," May 1980 and CRBRP-GEFR-0054, "SCRS Latch Assembly Real Time Test Numers One and Two Report," June 1981.

2. CRBRP-GEFR-00487, "Development of Nosepiece Orifice For the Secondary Control Rod System," October 10, 1979.

Question CS491.7 (4.3.2.1)

The Source Range Flux Monitoring (SRFM) System is described in Section 4.3.2.1.5. The applicant is requested to provide the minimum acceptable neutron flux at the detector, the maximum acceptable gamma-ray dose at the detector, and the calculated neutron flux and gamma-ray dose rate at the detector. Also, provide a description (method, models, etc.) of how these calculations were made.

In this same section it is indicated that SRFM detector operating character will be experimentally verified in ZPPR critical experiments which will mockup the actual CRBR installation as close as practical. In addition, transport calculations will be employed to account for neutron scattering effects in the cavity which cannot be mocked up in the ZPPR. Please respond to the following:

(1) Describe the transport calculations (method, models, etc.) to be performed.

(2) What plans are being made to verify that the planned ZPPR experiment is an accurate test of the SRFM detectors for the actual CRBR?

(3) Are transport calculations being planned to determine the radiation environment at the SRFM detectors for the actual CRBR configuration as well as the ZPPR configuration. If no, describe these planned calculations; e.g., method, models, etc.

Response

The minimum acceptable neutron flux at the SRFM detectors can be established in terms of the electronic noise and gamma background in the detector and its associated signal processing equipment. This noise level is expected to correspond to only about 1 count per second. Thus, neutron signals from fuel in the reactor core at the same level, i.e., approximately 1 cps, should be distinguishable from this background noise. At the SRFM detector, 1 cps corresponds to 0.025 nv based on a minimum detector sensitivity of 40 cps/nv. The minimum acceptable gamma-ray dose at the detector is 100 R/hr to assure that the sensitivity of the BF_2 counters is not adversely affected.

The neutron flux at the SRFM location (beginning-of-life conditions with a fully loaded core of fresh [low inherent source] fuel and blanket assemblies and all control rods fully inserted) has been calculated to be 0.6 nv, which corresponds to 24 cps at each of the three SRFM detectors. Calculations have also shown that the local gamma-ray dose rate never exceeds 84 R/hr at the detectors within the SRFM block. This calculation was performed for the reactor conditions existing immediately following shutdown of CRBRP including the affect of maximum burnup on all the fuel and blanket assemblies and a 30 year life of the plant.

The prediction of the minimum neutron flux at the SRFM detectors is calculated using multigroup two-dimensional discrete ordinates transport methods (DOTIIIW) for the fully shutdown beginning-of-cycle reactor core. The analysis model used includes the reactor core configuration (fuel, inner blanket, radial blanket, and radial shielding assemblies), fixed radial

shield, core support structure, upper internals/sodium pool, reactor vessel, guard vessel, an annular SRFM moderator/shielding assembly, and reactor cavity wall. The R-Z model of the reactor system in the reactor cavity models the geometrical configuration of the CRBR design including the radial position of the SRFM detector relative to the reactor core centerline. Multigroup angular dependent neutron fluxes at the outer surface of the guard vessel at the reactor core/SRFM detector midplane are used in discrete ordinates transport calculations (annular or R-0) to correct the predicted value in the R-Z model to the actual CRBR configuration. All design calculations are performed in forty-two (42) energy groups using a Po (transport corrected) cross-section library derived from ENDF/B-IV.

Calculation of the gamma-ray dose rate at the SRFM detector well is performed using two-dimensional (R-Z and R-0) models of the reactor system and SRFM configuration. Thirteen energy group discrete ordinates transport analysis of the gamma-ray dose rate following reactor shutdown have been performed using the gamma-ray sources due to neutron activation of 1) the sodium primary coolant within the reactor vessel and in the primary piping in the reactor cavity, 2) the reactor vessel and guard vessel materials, 3) the SRFM moderator/shielding assembly, and 4) the detector thimble and detector assembly. The neutron activation source calculations include the trace impurity levels of elements in materials which contribute to the SRFM gamma environment following shutdown after 30 years of operation.

Transport calculations to account for neutron scattering effects in the cavity have been completed. The DOTIV discrete ordinates transport computer code was used with an R-0 geometry model. An S_6 angular quadrature was used with a 51 energy group neutron cross-section library and a P_3 scattering approximation. The primary result of this analysis was that less than 20% of the SRFM count rate is due to neutron back scatter from the cavity wall and neutron streaming into the SRFM assembly.

The experimental verification of the SRFM detector operating characteristics has been completed in the ZPPR critical experimental program. That program had the following objectives: (1) to demonstrate the validity (similitude) of the ZPPR mockup to CRBRP and (2) the interpretability of the SRFM signal in both the initial load-to-critical phase and in the fully loaded phase. The ZPPR Engineering Mockup Critical experiment mocked up the entire CRBRP core out through the second row of removable radial shield assemblies and a 90 degree sector mockup out through one SRFM graphite moderator block. These experiments have been analyzed by ORNL and the results compared with CRBRP. The same nuclear cross-section data set was employed and the analytical methods were as similar as practical (2-D discrete ordinates transport methods in XY geometry for ZPPR and R-0 geometry for CRBRP). The required similitude and interpretability of the ZPPR mockup has been demonstrated. These analyses are currently documented by ORNL and will be subsequently issued.

Calculations of the radiation environment in the ZPPR critical experiment mockup have been performed. The calculation-to-experiment comparison for the radial flux distribution was very good. The C/E factors varied from approximately 1.06 at the inner edge of the removable radial shield assemblies to approximately 0.80 at the SRFM detector location in the mockup of the graphite moderator block.

Transport calculations of the radiation environment at the SRFM detectors for the actual CRBR configuration have been completed. The actual design analysis is described in the response to the first part of this question.

Question CS491.8 (4.3.2.2)

The applicant indicates that power distribution limits are derived from maximum allowable peak heat generation rates for nominal and anticipated operational conditions, which combined with the rod mechanical and thermal parameters, assure that incipient fuel melting does not occur in the fuel pellet with peak power. What are these specific, quantitative, power distribution limits? What are the maximum (quantitative) allowable peak heat generation rates (linear power) for nominal and anticipated opreational conditions? What clad and coolant temperatures correspond to these maximum peak heat generation rates?

Response

The peak calculated linear power discussed in PSAR Section 4.3.2.2 is 12.4 KW/ft in the fuel at the beginning of cycle one and 16.5 KW/ft in the inner blankets at the end of cycle four after 550 effective full power days of irradiation. Uncertainties include calculation to experiment ratio differences in isotopic fission and capture rates determined from analysis of experiments performed in ZPPR-7, methods/modeling uncertainties, and CRBRP engineering tolerances (fissile and pellet heavy metal content tolerances, reactor power normalization, control rod banking tolerance,...). The corresponding maximum linear power with 3σ uncertainty and 115% reactor power, is 15.7 KW/ft in the fuel at beginning of cycle one (15.9 KW/ft in the refueled assemblies at the beginning of cycle two) and 20.0 KW/ft in the inner blanket at the end of cycle four.

The core design has been based on limits of 16 KW/ft in the fuel and 20 KW/ft in the blankets. However, there are no maximum allowable peak heat generation rates per se; rather the limiting criterion is to prevent incipient fuel melting at 115% overpower, thermal-hydraulic design (THDV) conditions, and accounting for 3σ uncertainties. The highest power and temperature (peak and hot) rods in the fuel and blanket are analyzed with the LIFE code (as reported in PSAR Section 4.4.3.3.6) to guarantee that no incipent melting occurs at the aforementioned conditions. Cladding and coolant temperatures are calculated by the NICER code for each rod and input as boundary conditions to LIFE. Maximum cladding ID temperatures are provided in Figures 4.4-45 anf -46. Design, extrapolation and experimental/modeling uncertainties, at the 3σ level of confidence as reported in 4.4.3.2.2, are factored into this analysis.

Note that the peak clad and coolant temperatures do not necessarily correspond to the maximum peak heat operation rates because of orificing for the various constraints. Actual peak temperatures for all assemblies are provided in PSAR Section 4.4.

Question CS491.9

What type of instrumentation is planned to allow detection of flux (power) tilts in the core at operational levels?

Response

Three separate types of instrumentation will indicate the presence of flux tilts.

Firstly, two redundant control rod position indication systems will provide evidence of any deviation of single control rods from their correct banked locations, which could result in flux tilts.

Secondly, a core exit temperature measurement system will monitor the sodium temperature at the exit of almost all fuel assemblies. In this way, the changes in thermal power distribution arising from a flux tilt will be indicated to the operators.

Finally, two separate flux monitoring systems located on the periphery of the Reactor vessel and each containing three equidistantly located detectors will provide evidence of overall tilts in Reactor flux.

In conjunction with the rod position indicators and the flux monitoring indicators, the plant computer and plant annunciator system will be used to inform the operator of flux tilts.

Question CS491.10 (4.3.2.2)

In Section 4.3.2.2.9c clarify the expression "3σ equivalent uncertainties".

Response

In the radial blanket power uncertainties evaluation discussed in Section 4.3.2.2.9C of the PSAR, the experimental component of the power uncertainty is based on the pre-Engineering Mockup Critical (ZPPR-7) isotopic fission rate data. This data base was very limited for the radial blanket and therefore it does not provide a good statistical basis for developing the uncertainty. Consequently, two times the maximum range of observed calculation to experiment ratio (C/E) variations for each isotopic reaction rate in the radial blanket was used to develop the uncertainty. This approach is sufficiently conservative for preliminary design to be equivalent to $\pm 3\sigma$ uncertainty limits. The radial blanket end of life peak linear power of 16.6 kW/ft at the end of cycle 4 and 18.0 kW/ft at the end of cycle 8 (including 3σ uncertainty and 15% overpower margin) is not particularly close to the 20 KW/ft peak in the inner blankets. A more extensive data base is being obtained from the Engineering Mockup Critical (ZPPR-11) so that conventional statistics can be utilized to evaluate the 3σ uncertainty envelope for final design.

Question CS491.11 (4.3.2.3)

"The Doppler reactivity constant has been computed for temperatures above 2100 degress K (e.g., 3000, 4000 and 5000 degrees K). What assumptions were made, or how uncertain are these high temperature coefficients when your basic 30-group library probably only gives temperature dependent cross sections to 2100 degrees K?"

"Can you argue that any safety considerations only very weakly depend on accurate high temperature Doppler coefficients?"

Response

The high temperature coefficients have one sigma uncertainties of ± 7% for temperature dependence, ± 10% for Doppler constant, and ± 12% for the combined Doppler feedback reactivity at elevated temperature. A discussion of the Doppler reactivity constant is presented in revised Section 4.3.2.3. The temperature dependent cross sections are given to 2100°K with extrapolation limited to 4000°K in the proposed PSAR Figure 4.3-27a.

The basic reference on the subject of sensitivity of energy release during an HCDA to the uncertainty in the Doppler coefficient is the paper by Nicholson and Jackson.(1) They identified a relationship between the Doppler coefficient, $A = T\frac{dK}{dT}$, and the core peak temperature of:

$$\left(\frac{T_2}{T_1}\right) = \left(\frac{A_1}{A_2}\right)^{0.2}$$

for ramp rates as different as 20$/sec and 100$/sec. The peak temperature is a useful parameter for comparison, since it bears a close relationship to the energy of isentropic expansion at slug impact on the head.

(1) R. B. Nicholson and J. F. Jackson, "A Sensitivity Study for Fast-Reactor Disassembly Calculations", ANL-7952, January 1974.

A calculation performed on a molten pool configuration derived from the CRBR BOC-1 heterogeneous core (ramp = 30$/sec) shows a relationship of

$$\left(\frac{T_2}{T_1}\right) = \left(\frac{A_1}{A_2}\right)^{0.3}$$

The higher exponent is explained by the greater peak to average temperature distribution of the heterogeneous core relative to the homogeneous design used by Nicholson and Jackson.

In the calculation performed for CRBR the reactivity peaks before a core average temperature of 3400°K is attained. By the time 3600°K average is reached, the rate of increase to feedback frm material motion exceeds that of the Doppler contribution. After the power peaks the Doppler contribution quickly stabilizes whereas the motion contribution continues to accelerate and soon exceeds the Doppler in absolute magnitude. The relationship between Doppler coefficient and core average temperature is even more loosely coupled as

$$\left(\frac{T_2}{T_1}\right) = \left(\frac{A_1}{A_2}\right)^{0.19}$$

Because of the low specific power in the internal blanket assemblies of the heterogeneous core, the average temperature responds more sluggishly than the peak.

By the time peak temperatures of 5000°K are reached the internal pressures are disrupting static structures and accelerating fuel mass away from peak power locations. These peaks are associated with core average temperatures of 4000°K in the heterogeneous core. By this time the magnitude of the Doppler coefficient has become secondary to the details of material relocation.

In conclusion, both general and specific calculations support the view that Doppler uncertainties in the range of temperatures above 4000°K are not significant. Doppler plays its most significant role below 3500°K before fuel begins to move.

Question CS491.12 (4.3.2.3)

Uncertainty in the Doppler constant has been based principally on the analysis of the SEFOR Core I and II experiments performed by GE. Is the extrapolation from SEFOR to CRBR simply from one reactor to another or between reactors and methods? If the PSAR method for calculating the Doppler constant is different from that used by GE to calculate the SEFOR Doppler constant, please provide a comparison of the two methods. Also provide justification as to why the uncertainty of the GE method should be accepted as that for the CRBR method. The PSAR also indictes that Ref. 9 provides data for extrapolation from SEFOR to LMFBR power reactors accounting for differences in core composition, core-spectrum, etc. Provide justification that the SEFOR to LMFBR power reactors (1973 type) extrapolation should be identical to the SEFOR to CRBR extrapolation.

Response

The CRBRP Doppler constant uncertainty is based in large part on the SEFOR measurements and analyses performed by General Electric, Hanford Engineering Development Laboratory, and others. The HEDL analysis, documented in HEDL-TME-73-42, "Analysis of the Doppler Constants of Cores I and II of SEFOR," by R. A. Harris (May, 1973), was performed with the same neutronics codes and basic cross section data as that employed in the CRBRP nuclear design. The results for SEFOR-Core II are:

Experimental Doppler Constant (with ENDF/B delayed neutron data consistent with that in the CRBRP design)	-0.0063 (T dk/dT)
GE Calculated Doppler Constant	-0.0063
HEDL Calculated Doppler Constant	-0.0062.

The close agreement between the HEDL and GE calculations, as well as the good agreement with the measured value, demonstrates that there is no significant difference in GE and Westinghouse Doppler calculation methods.

The SEFOR Doppler uncertainty was assessed by GE based on the potential for uncertainties in the interpretation of the experimental SEFOR parameters (fuel temperature determination, separation of non-Doppler feedback components, and others). A recent survey article by Paul Greebler, "Reactivity Feedback and Stability; A Status Report on Safety Lines of Assurance," DOE/TIC-11209 (1980), provides an excellent summary of the SEFOR Doppler constant uncertainty and extrapolation assessments. The Doppler uncertainty, extrapolated to a large LMFBR, is ±10% (1σ). Most of the extrapolation factors considered by Dr. Greebler apply to the SEFOR-to-CRBRP extrapolation. The principal additional extrapolation factors in CRBRP are associated with blanket effects in the heterogeneous core configuration. Doppler calculational capability in a heterogeneous core arrangement has been investigated using small-sample Doppler measurements in ZPPR. Argonne National Laboratory has produced a core U^{238} Doppler map for ZPPR-11B, the clean beginning of life CRBEP Engineering Mockup Critical (reference: AHL-ROP-103). The integral measured ZPPR-11B fuel Doppler constant is 0.00331. The Westinghouse calculated value is -0.00327. The good agreement between calculated and measured ZPPR-11B Doppler constant suggests that there is no significant additional Doppler constant error in the heterogeneous core arrangement.

Question CS491.13 (4.3.2.3)

It appears that Expansion and Bowing Reactivity Coefficients are computed by integrating core movements over axial and radial worth curves. Has the reactivity of the small core reconfiguration been accounted for?

As the core heats up the structural and fuel materials expand increasing the size of the core. Does the mass of sodium necessarily increase in the expanded core? That is, is it possible that sodium expands enough with higher temperature that its mass in the core stays the same or even decreases?

Response

The uniform radial expansion reactivity feedback coefficient was determined from eigenvalue difference calculations with reference and expanded-core models in hexagonal geometry. The reactivity associated with the fundamental mode flux change has therefore been accounted for explicitly in the expanded core eigenvalue calculation. The radial bowing reactivity coefficients in Tables 4.3-24 and 25 were determined by moving axial segments or assembly rows radially through material worth gradients in a first-order perturbation sense in RZ geometry. A uniform radial expansion coefficient can also be synthesized from these bowing coefficients by summing the reactivity worths for a uniform radial movement of each node. This synthesized coefficient agrees very well with the directly calculated radial expansion coefficient. The uniform axial expansion reactivity feedback coefficient is also calculated from first order perturbation theory in RZ geometry. The axial expansion reactivity coefficient is the difference between the average material worth in the 36-inch core and the worth at the core/axial blanket boundaries.

As the core heats up, the structural and fuel materials expand, increasing the volume of the core. The volume of sodium increases in this heat-up. For example, the sodium volume increase in the transition from refueling temperature (400°F) to hot full power conditions is less than 1%. The sodium density decrease in this same refueling temperature to hot full power transition is aobut 6%, so that there is a net reduction in sodium mass of 5-6%.

Question CS491.14 (4.3.2.4)

There appears to be insufficient control rod neutronics. Provide descriptions of calculations and data that characterize control rod burnup, management, and flux and power distributions.

Response

Control rod B^{10} depletion in the partly inserted Row 7 Corner primary control rod bank amounts to 5-6 atom % in a 275 effective full power day equilibrium cycle. Accumulated B^{10} burnup is determined by time and space integrating the B^{10} capture rate from RZ diffusion calculations in the 2DB code with the Row 7 corner primary control rod ring inserted at beginning-of-cycle depth for the first half of the cycle and end-of-cycle depth for the remainder of the cycle. Because of the strong spatial self-shielding in the fully enriched CRBRP control rods, this depletion only accounts for a 3% loss in reactivity worth which is approximately 0.2% Δk for the R7C bank. During the course of an equilibrium burnup cycle, the core excess reactivity is depleted nearly 2%Δk so that the primary shutdown margin, in fact, increases substantially more than the loss in control rod worth. From Table 4.3-29, the primary control rod worth margin at the beginning-of-cycle 4, the second of the two-cycle equilibrium batch burnup cycles, is larger than that at the beginning of cycle 3 such that control rod B^{10} depletion from cycle 3 does not preclude use of these same assemblies in cycle 4.

Control rod management is addressed in Sections 4.3.2.5 and 4.3.2.6 of the PSAR.

Calculations to characterize CRBRP control assembly flux and power distributions are based on multigroup (55 energy groups, 42 neutron and 13 gamma) two-dimensional diffusion theory computer calculations using the ODTIIIW computer program. A series of triangular mesh calculations was performed for each individual assembly in the reactor core for beginning of cycle 1 (BOC1), BOC3, and end of cycle (EOC4) conditions. The conditions were modeled at the radial midplane with separate cases run to model the full-in conditions for each type (primary or secondary) and location (R4, R7C, or R7F) of assembly. Output flux distributions from the DOTTIIIW runs were input to the HEDPIN computer program to generate 37 (PCA) and 31 (SCA) pin radial flux and power distributions using a polynomial equation fit to the individual group flux distributions in each assembly.

Two dimensional, R-Z, diffusion theory calculations were performed at BOC1 conditions to define the variation of nuclear heating as a function of control absorber assembly position for the row seven corner (R7C) primary control assembly for a total of seven insertion positions ranging from the control absorber assmbly fully inserted to a fully withdrawn condition. Axial power

and flux distributions were generated for time-in-life conditions and specified insertions with the output data files using a series of interpolation routines and cycle-to-cycle factors. Normalized axial distributions at a selected insertion position are applicable to each assembly type and absolute values for each type of assembly are predicted using the fully inserted flux and power values for each assembly type developed in the detailed triangular mesh radial midplane analyses.

Question CS491.15 (4.3.2.7)

In order to establish the criticality of the hot-full power CRBRP, why not perform a direct K calculation at hot-full power conditions?

Response

All CRBRP criticality (k_{eff}) calculations have been performed in hot-full-power core geometry models with major heavy metal cross sections which have been corrected for hot-full-power pellet temperatures.

Question CS491.16 (4.3.2.7)

Why were the minimum critical configuration calculations performed with only P_o cross-sections?

Response

The minimum critical configuration calculations in 4.3.2.7 were performed with transport-corrected P_o cross-sections. The correction takes the form of an adjustment to the transport and in-group scattering cross sections using the cosine of the average scatttering angle. This transport correction gives results equivalent to a P_1 approximation .

Question CS491.17 (4.3.2.9)

Section 4.3.2.9 and Table 4.3-35 report neutron flux and fluence data at locations within the core and in structural components outside the core, i.e., core barrel and reactor vessel. Please respond to the following question regarding the ex-core calculations:

1. What was the calculational method used?

2. What was the geometrical model used and what modeling approximations were made?

3. What was the neutron source used in the calculations? What was the basis for this source and what approximations were made in incorporating it into ex-core calculations?

4. What procedure was used to insure that the ex-core neutron fluences, over plant life, are conservative and representative of the worst points on the core barrel and pressure vessel?

5. What is the accuracy of the calculated fluxes?

6. What are the limiting flux (fluence) values for the core barrel and pressure vessel?

Response

1. Calculations to define the in-vessel radiation environment at full power conditions use a two-dimensional RX modeling of the CRBRP reactor system. The radiation environment was developed using the discrete ordinates transport/diffusion theory computer program DOTIIIW.

   Multigroup (42 neutron energy groups) neturon flux distributions were calculated in diffusion theory based on a core region fission source distribution defined by nuclear analysis methods defined in Section 4.3.2.2 of the PSAR. Neutron cross-sections were generated with the computer program XSRES/WIDX. The cross-sections, the FTR 300-S ENDF/B-IV library, are a 42-energy group set for P_0 scattering, and transport corrected for P_1 scattering by an extended transport approximation.

2. Cylindrical (RZ) modeling of the CRBRP is used. The reactor internals RZ model represents a cylindrical description of the regions internal to and including the reactor vessel in the radial direction, and from the core support structure plate to the upper internals structure/sodium pool region in the axial direction. The RX modeling defines the spatial dependence of the reactor internals irradiation environment based on homogenized material regions. The modeling approximation uses a model of the array of hexagonal assemblies (fuel, inner blanket, radial blanket, and radial shield) as developed from conservation of mass and volume.

3. The fission source distributions within the core were obtained as output from the nuclear analysis methods defined in Section 4.3.2.2 of the PSAR. Cylindrical (RZ) modeling of the fissile reigons in DOTIIIW were identical to those of the fission regions used in the nuclear analysis. The nuclear analysis model is expanded for ex-core regions to adequately represent the reactor system.

4. The permanent structures radiation environments are based on an equilibrium cycle average flux distribution, (e.g., BØC3-EØC4). Cylindrical (RZ) maximum flux levels by component (e.g., core barrel), and by region (e.g., lower ring, lower ring-middle cylinder circumferential weld, middle cylinder, middle cylinder longitudinal weld), are defined radially and axially relative to the core axis and core midplane, respectively. Detailed final design analyses will consider azimuthal flux variations resulting from hexagonal-to-cylindrical interfaces, and neutron flux streaming factors for actual component design.

5. Analysis has defined an 8%-12% (1σ) neutron flux uncertainty of the fixed radial shield-core barrel region. Flux uncertainties are to be incorporated into the CRBRP radiation environment predictions at the time of final design analysis.

6. The core barrel material fluence limits are defined in PSAR Table 4.2-53 (Amend. 54). Fluence limits for the reactor vessel basemetal (SS304) and weldment (SS308) are 2.1×10^{22} n/cm^2 and 1.4×10^{22} n/cm^2, respectively.

Question CS491.18 (4.3.3)

Cite references where your procedures (methods, codes, models and data) have been clearly compared with some other laboratory's procedures for the calculation of Doppler coefficients, sodium void coefficients, control rod worths, power and flux distributions, material worths, burnup, bowing reactivity coefficients, power coefficients, temperature defects, startup coefficients, etc. Some of the fundamental neutronics parameters of the CRBR are Doppler coefficients, sodium void coefficients, control rod worths, power and flux distribution, burnups, and bowing reactivity coefficients. Identify the particular safety consideration that you feel is the most impacted, limited, or made uncertain by each of the above parameters. Then, identify the most uncertain link in the calculational chain for each of the parameters.

Response

There are two major areas where published CRBRP fast reactor analysis results can be compared with independent results from other laboratories. The first is the Zero Power Plutonium Reactor (ZPPR) Cooperative Analysis Program with participation by Westinghouse, Argonne National Laboratory and General Electric. In the ZPPR analyses, cross-section data and calculational methods are benchmarked against measured integral parameters (criticality, control rod worth characteristics, fission rates, sodium void worth, small-sample material worths, and others) in a zero-power full-scale mockup of the CRBRP core. The Westinghouse calculations can be compared with those from ANL and GE, as well as with the measured parameters. The results from these comparisons are used to assess bias factors and uncertainties in CRBRP nuclear performance characteristics calculated with the same methods and cross-section data, a summary of which is contained in Sections 4.3.3.3 through 4.3.3.9 of the CRBRP PSAR. The following references contain details of the analysis of the ZPPR-7 experiments:

Westinghouse: CRBRP-ARD-0237, "ZPPR-7 and 8F Cooperative Analysis Program: Critical Experiments," R. V. Rittenberger and J. A. Lake, March, 1979, (Availability: USDOE-TIC).

ANL: Nuclear Technology 44, "Physics Studies of a Heterogeneous Liquid-Metal Fast Breeder Reactor," M. J. Lineberry, et. al., pp. 21-43, June, 1979.

GE: CRBRP-GEFR-00025, "Analysis of the ZPPR-7 Critical Experiments," A. K. Hartman and J. T. Hitchcock, July, 1977, (Availability: USDOE-TIC).

The second area where CRBRP calculational methods can be compared with those from independent laboratories is the Large Core Code Evaluation Working Group (LCCEWG). LCCEWG is a cooperative effort, supported by USDOE, and including participants from all the major fast reactor analysis organizations* where the results of fast reactor nuclear performance characteristics, calculated with various neutronics codes, are compared. These characteristics include k_{eff}, peak-to-average fission rate, breeding ratio, control rod worth, burnup reactivity, neutron balance, and sodium void worth. The following references summarize the results of the analysis of the completed benchmark problems:

DOE/TIC-1027427: "The Large Core Code Evaluation Working Group Benchmark Analysis of a Homogeneous Fast Reactor," September, 1981.

DOE/TIC-2005709 and 2005710: "The Large Core Code Evaluation Working Group Benchmark Analysis of a Heterogeneous Fast Reactor," January, 1982.

All of the neutronic parameters listed in the question, except sodium void coefficients, factor into a variety of design basis events. They are treated at length, including uncertainties, in Chapter 15 of the PSAR. The sodium void coefficients are significant for the HCDA. This parameter, with uncertainty variations, is covered in depth in CRBRP-3, Vol. 1 (Ref. 491.18-1) and CRBRP-GEFR-00523 (Ref. 491.18-2) which are on the docket.

Ref. 491.18-1 CRBRP-3, Vol. 1, "Energetics and Structural Margin Beyond the Design Base," Dept. of Energy, CRBRP Project Office, March 1982.

Ref. 491.18-2 CRBRP-GEFR-00523, "An Assessment of HCDA Energetics in the CRBRP Heterogeneous Reactor Core," General Electric Co., Dec. 1981.

*Participants in LCCEWG include Atomics International, Argonne National Laboratory, Combustion Engineering, General Electric, Hanford Engineering Development Laboratory, Los Alamos Scientific Laboratory, Massachusetts Institute of Technology, Oak Ridge National Laboratory, and Westinghouse Advanced Reactors Division.

Question CS491.19 (4.3.3)

The applicant's method of calculating the CRBR and applying biases derived from critical assembly investigations is similar to that performed for the FFTF. Since startup measurements on the FFTF have been completed, what investigations have been performed to discover which methods and calculations did not stand up well for the FFTF and hence may be suspect for the CRBR?

Does the 30-group neutron cross-section library (your basic starting point) have a reference? Can this exact library be obtained in order to reproduce any of your calculations?

Response

The CRBRP nuclear design has been based on an extensive Engineering Mockup Critical experiments program in which the critical mockup exhibited a high degree of similitude with the CRBRP, much closer in many respects than FFTF. This similitude includes important characteristics like the heteogeneous core configuration, plutonium enrichment and composition control rod pattern and worths, boundary conditions and others. Consequently, bias factors and uncertainties from core integral physics characteristics in ZPPR are accurately extrapolated to CRBRP.

Startup and low power physics characterization measurements have been performed in FFTF. These measurements include initial criticality and control rod worth determinations, isotopic fission rate characterization measurements, and temperature and power coefficient determinations. The results of these measurements are currently being evaluated primarily by the FFTF staff. An effort is currently underway, however, to calculate the FFTF control rod worth measurements with CRBRP design tools.

The 30-group cross-section library, used in the PSAR nuclear analysis, is based on ENDF/B-III data which has been processed at HEDL with the ETOX code. The library is essentially the same as FTR Set 300. The exact 30-group CRBRP library, consisting of infinitely dilute cross-section and self-shielding factors in the Bondarenko format, can be obtained from CRBRP.

Question CS491.20 (4.3.3.7)

In this section you state that ZPPR-4 control rod bank worth C/E values range from 0.95 to 1.04. Why do these numbers differ from those presented in Table 4.3-40.

Response

The ZPPR-4 program consisted of four distinct phases (critical configurations) simulating a clean-beginning-of-life core and a burned-end-of-life containing plutonium in the radial blankets, both with and without inserted control rod banks. The calculation to experiment (OBE) ratios for control rod worths in all phases of ZPPR-4 range from 0.95 to 1.04 (PSAR reference 29 in Chapter 4.3). The data in PSAR Table 4.3-40 summarizes the average C/E, from all four phases, for each control rod bank. The range of variations is dampened by the averaging process in the Table 4.3-40 values.

Question CS491.21

Section 15.1.2 describes qualitative core limits for normal operations, transients, and accidents. Are specific, quantitative, design limits going to be specified? If not, please justify why qualitative limits are preferable to quantitative limits.

Response

This subject was addressed at the February 25, 1982 meeting with NRC. The qualitative limits of PSAR Table 15.1.2-1 have been translated into specific acceptance guidelines for preliminary safety evaluation for each event classification, as shown in PSAR Table 15.1.2.2. The guidelines of PSAR Table 15.1.2-2 are derived based upon the design limits and methodology and insure that the qualitative limits of PSAR Table 15.1.2-1 are preserved. Detailed calculations of mechanical damage to meet the selected umbrella transients have been reported in Chapter 4. Detailed calculations of mechanical damage will be performed for the final safety review (FSAR). If other specific core design limits are required, they will be specified and discussed with NRC prior to the FSAR submittal.

Question CS491.22

No sodium boiling is used as a limit for extremely unlikely faults in Table 15.1.2-2. This limit does not appear to have a specific value (temperature) as it depends on the coolant pressure. If this critierion results in a variable quantitative temperature limit for the various events considered, why is the corresponding design limiting coolant temperature (and its basis) not specified for each event?

Response:

The no sodium boiling limit does result in a variable quantitative temperature limit for the various events considered. A corresponding design limiting temperature is not specified for each event because of the following:

(1) For those events where the maximum coolant temperature stays significantly below the boiling temperature (regardless of potential variations in pressure) it is not necessary to calculate specific temperature limits to have confidence that boiling is avoided.

(2) In cases where the hot channel coolant temperature approaches the expected saturation temperature of the coolant, the time-dependent pressure is examined to arrive at an estimate of the applicable saturation temperature. Due to the continuous variation of temperatures and pressures during a transient, the maximum temperature in the hot channel coolant may not be associated with the highest likelihood of boiling. The minimum difference between the saturation temperature and the hot channel coolant temperature is presented as a margin to boiling. Thus, the calculated margin is equivalent to using a unique requirement for each event.

Question CS721.1

The Atomic Safety and Licensing Appeal Board in ALAB-444 determined that the Safety Evaluation Report for each plant should contain an assessment of each significant unresolved generic safety question. It is the staff's view that the generic issues identified as "Unresolved Safety Issues" (NUREG-0606) are the substantive safety issues referred to by the Appeal Board. Accordingly, we are requesting that you provide your justification for permitting plant operation in consideration of these issues. This should include a description of any measures in terms of design or operating procedures or investigative programs that are being pursued to address these concerns. The justification should provide an overall summary of your position on each issue in addition to a reference to various sections of the PSAR where related information is presented.

There are currently a total of 27 Unresolved Safety Issues. Some of these issues are clearly not applicable to Clinch River and need not be addressed. The remaining issues either clearly apply or the general intent of these issues applies to Clinch River. Those issues that you should address are identified in the following list.

"UNRESOLVED SAFETY ISSUES" (APPLICABLE TASK NOS.)

Waterhammer - (A-1)
Steam Generator Tube Integrity - (A-3, A-4, A-5)
Anticipated Transients Without Scram - (A-9) - Resolved*
Fracture Toughness of Steam Generator and Reactor Coolant Pump Supports - (A-12)
Systems Interaction in Nuclear Power Plant (A-17)
Environmental Qualification of Safety-Related Electrical Equipment - (A-24) - Resolved*
Residual Heat Removal Requirements - (A-31) - Resolved*
Control of Heavy Loads Near Spent Fuel - (A-36) - Resolved*
Seismic Design Criteria - (A-40)
Shutdown Decay Heat Removal Requirements - (A-45)
Seismic Qualification of Equipment in Operating Plants - (A-46)
Safety Implications of Control Systems - (A-47)
Hydrogen Control Measures and Effects of Hydrogen Burns on Safety Equipment - (A-48)

In responding to this question for each issue you should address the following guidelines: (1) discuss the applicability of the issue to Clinch River; (2) if you consider these issues to be resolved for Clinch River provide the basis for this conclusion; and (3) if you consider this issue unresolved as it applies to Clinch River provide your basis for operation and a description of your relevant programs to resolve the issue.

*A number of the issues listed above are technically resolved. Your response to this question should address the applicability of the generic resolution to Clinch River.

Response:

CRBRP has considered the "Unresolved Safety Issues" identified in this question and has applied appropriate measures to assure that the plant may be permitted to operate, given due consideration of these issues. Suitable resolutions to the issues which reflect the technology of CRBRP are discussed below.

WATERHAMMER A-1

APPLICABILITY TO CRBRP:

Waterhammer and its equivalent, sodium-hammer, are applicable to the CRBRP plant. Waterhammer events introduce large hydraulic loads, or pressure pulses, into a fluid system, and are the result of rapid condensation of steam pockets, steam-driven slugs of water, pump startup into voided lines, and improper (or sudden) valve closures. Where waterhammer has occurred in water lines, the principal damage has been to pipe hangers and snubbers. In none of the waterhammer incidents reported has there been a release of radioactive material or a disabling of safety systems.

RESOLUTION FOR CRBRP:

Technical resolution for this issue has been effected on CRBRP. The water and steam systems of the CRBRP plant [i.e., the Steam Generator System and the Steam Generator Auxiliary Heat Removal System (SGAHRS)] are described in PSAR Sections 5.5 and 5.6.1, respectively. Design resolution of waterhammer will be accomplished by including fill and vent holes in the auxiliary feedwater sparger in the steam drum to preclude waterhammer effects resulting from steam-driven slugs of SGAHRS water, and by including hydraulic dampers in the actuators of the water and steam isolation valves to preclude waterhammer effects resulting from the overly rapid closing of a valve. The vent holes are described in revised PSAR Section 5.5.2.3, and the hydraulic dampers are discussed in Section 5.5.3.1.5.2.

Protection against the effects of pipe breaks and waterhammer loads are incorporated in ASME design codes which require consideration of impact loads and dynamic loads in the structural design. The ASME codes are applied to the sodium systems of CRBRP, i.e., the primary heat transport system, the intermediate heat transport system (including the steam generator) and the sodium/water reaction pressure relief system, as well as to the water/steam systems.

The design of the intermediate heat transport system, described in PSAR Section 5.4, has addressed the occurrence of sonic pulses, similar to those produced in waterhammer incidents. Sonic pulses may occur as a result of a large sodium/water reaction caused by a postulated steam generator tube rupture. In addition, the design of the sodium/water reaction pressure relief subsystem, described in PSAR Sections 5.5, 7.5.6 and 15.3.3.3, has considered the effects of accelerated sodium slug flows in the component and piping design.

The absence of sodium isolation valves in the IHTS precludes high decelerations of sodium which could cause waterhammer effects in sodium. The high normal boiling point and high heat of vaporization of sodium make vapor-driven sonic pulses extremely unlikely.

STEAM GENERATOR TUBE INTEGRITY (A-3, A-4, A-5)

APPLICABILITY TO CRBRP:

This issue is applicable to CRBRP. The design uses steam generators in each of the three heat transport system loops for the transfer of heat from the secondary sodium loop to the water systems. The issue concerns the capability of steam generator tubes to maintain their integrity under normal operation and accident conditions, should mechanisms exist which can result in tube degradation.

RESOLUTION FOR CRBRP:

Technical resolution for this issue has been effected on CRBRP.

The CRBRP Steam Generator design has minimized the potential for corrosion/erosion degradation common to pressurized water reactor steam generators. The tubes in the CRBRP Steam Generator are exposed to the water environment only on their inside surface. The waterside consists of smooth wall tubes terminated in spherical plena. This greatly reduces the potential for tube degradation by corrosion induced wastage, cracking and denting. Preferential corrosion product formation or deposition is minimized since there are no restrictions, crevices, water levels or structure-related concentration-sites present. Water side chemistry is maintained by state-of-the-art, all volatile chemistry control which has been modified from pressurized water reactor practice and which will incorporate fossil plant experience with 2 1/4 Cr-1Mo tube material. Full flow demineralizers, a 2:1 full power recirculation ratio i.e., for each 2 parts water flowing into the steam generator, 1 part is being recirculated and 1 part is fresh feed, and 10% blowdown all contribute to minimizing the potential for waterside corrosion-related problems.

Steam generator tube integrity has been properly addressed in the CRBRP design through specifying that a total of 29% of the 0.109 inch tube wall thickness (Section 5.5.2.3.4 of the PSAR) be allocated for corrosion, cleaning and wear allowances. The reduced thickness is used for all stress and strain calculations while the full thickness is used for weight and seismic calculations. In addition, allowances are provided to compensate for material strength degradation by post weld heat treatment, thermal aging and decarburization. In spite of these reductions in thickness and material strength conservatively based on end-of-life condition, the tube has a 38% margin over the ASME Class 1 criteria for pressure retention.

Erosion of tubes as a result of tube vibration is being addressed in three ways, as discussed in PSAR Section 5.5. First, the design and material selection of the shell (sodium containing) side of the steam generator (SG) provides for acceptable accommodation of tube vibrations; all known flow induced vibration mechanisms have been evaluated. Tube to spacer plate gaps are consistent with guidelines used throughout the heat exchanger industry. Tube spacer plate material (Inconel 718) has been chosen since it has a low

coefficient of friction when coupled with the tube material (2 1/4 Cr-1Mo). Second, to confirm that all flow induced vibration mechanisms are considered, a flow induced vibration program has been implemented using both a full scale model closely representing the prototype unit and a 0.42 scale model. The scale model flow induced vibration tests will assure that mechanisms of unexpected origin in the plant unit design do not exist. Third, CRBRP has developed an ultrasonic tube inspection technique which can detect the tube wear well before the tube wall is thinned beyond that specified for the design, which is discussed in PSAR Appendix G.

ANTICIPATED TRANSIENTS WITHOUT SCRAM (A-9)

APPLICABILITY TO CRBRP:

This issue is applicable to CRBRP. The issue concerns the potential for a common mode failure to reduce the reliability of protection systems in such a way that the system might not function properly in the event of an anticipated transient.

RESOLUTION FOR CRBRP:

Technical resolution of this issue has been achieved for Light Water Reactors through publication of NRC staff position contained in NUREG-0460 Vol. 4. "Anticipated Transients without scram for Light Water Reactors." Specific design features and analyses are prescribed for LWRs. These prescriptions are not appropriate for CRBRP. The issue is resolved on CRBRP as discussed below.

CRBRP incorporates into the design, two independent shutdown systems, either of which has the capability, of itself, to terminate reactor transients and to effect rapid shutdown of the reactor automatically. Strict attention to diversity of the design features and to the separation of the two shutdown systems reduces the likelihood, of the simultaneous prevention of both systems from operating when called upon as a result of a common mode failure, to be incredible. Discussion of the design of the two shutdown systems, and the diversity of their features, is provided in PSAR Sections 4.2.3, 4.3.2., and 7.2.

FRACTURE TOUGHNESS OF STEAM GENERATOR SUPPORT (A-12)

APPLICABILITY TO CRBRP:

This issue is applicable to CRBRP. This issue concerns the low fracture toughness and potential lamellar tearing in materials used for heat transport system component supports.

RESOLUTION FOR CRBRP:

Technical resolution for this issue has been effected on CRBRP.

The design of that portion of the CRBRP Steam Generator Support which is in accordance with the ASME Code requires that impact testing, Charpy V-Notch, of all materials of construction be performed per paragraph NF-2311 of ASME Section III. The acceptance standards of NF-2330 must be met at 50°F maximum. Since the lowest operating temperature of the Steam Generator Support is 125°F, there is adequate margin for protection against non-ductile failures. In addition to the materials fracture toughness requirements, postulated defects are evaluated using the procedure in Appendix G of ASME Section III for all applicable conditions plus shipping, lifting and installation. Therefore, the concern relating to fracture toughness of Steam Generator Supports has been properly and adequately addressed in the CRBRP design.

The building structural steel that supports Steam Generators will be designed in accordance with the AISC Code requirements using ASTM A-36 steel and SA-540 bolting material. Sandia Laboratories' Report SAND78-2348 (Appendix C to NUREG-0577, "Potential for Low Fracture Toughness and Lamellar Tearing on PWR Steam Generator and Reactor Coolant Pump Supports - Resolution of Generic Technical Activity A-12 for Comment") classifies A-36 as falling within Material Group II, i.e., intermediate susceptibility to brittle fracture, and identifies that Group II materials have been judged adequate. SAND78-2348 classifies A540 bolting material as falling within Material Group III, which has also been judged adequate.

The supports for reactor coolant pumps and intermediate heat exchangers are SS304, connected to ASTM A-36 embedded plate with SA-540 bolting material.

CRBRP applies design criteria to the reactor vessel and steam generator supports to preclude conditions leading to lamellar tearing (e.g., material selection, welded joint orientation, and fabrication sequence).

<u>SYSTEMS INTERACTION IN NUCLEAR POWER PLANTS (A-17)</u>

APPLICABILITY TO CRBRP:

This issue is applicable to CRBRP. This issue concerns the sufficiency of integration of divided responsibilities for design, analysis and installation of systems among teams of engineers with functional specialties such as civil, electrical, mechanical and nuclear, to assure that adverse operational interactions between plant systems are minimized.

RESOLUTION FOR CRBRP:

Technical resolution for this issue has been resolved on CRBRP.

CRBRP has implemented a combination of programs and activities directed towards assuring an integrated design which has considered the potential for and provides protection against adverse operational interactions between plant systems. These include the CRBRP quality assurance program, a comprehensive design control program, specialized design reviews, and reliability and probabilistic risk assessment programs.

The plant has been designed to requirements which support a defense in depth philosophy. These requirements assure physical separation and independence of redundant safety systems, diversity of safety features, and protection against hazards such as sodium leaks, sodium/water reactions, line ruptures, missiles, tornadoes, floods, seismic events, fires, human errors, and acts of sabotage. These requirements are described in PSAR Section 1.1.2 and Chapter 3.

To assure that these requirements are properly implemented the CRBRP Quality Assurance Program addresses the design process. This program requires that during the design process emphasis is placed on the control of interfaces between systems. This interfacing is described in PSAR Section 17A.3.1. Independent design reviews, with interdisciplinary memberships and objectives, are required at various stages of the design process. Requirements for these independent design reviews are described in PSAR Chapter 17, Appendix G.

CRBRP conducted extensive Key Systems Reviews (KSRs) cutting across system boundaries. These reviews were conducted by multidisciplined groups of individuals with objectives which included assessments of plant and operator responses during off normal and accident events. Interactions between systems were explicitly considered as part of these reviews. Evaluations of the results of these reviews addressed the potential for adverse systems interactions, including considerations of human, spatial, and functional, coupling effects. A summary report of these reviews (KSRs) was provided in Reference QCS271.1-1.

The CRBRP safety-related reliability program is described in PSAR Appendix C. The results obtained in this program provide additional confidence that systems designs will minimize the potential for adverse operational interactions.

Reference QCS271.1-2 described the CRBRP Probabilistic Risk Assessment (PRA) Program Plan which includes tasks which will demonstrate that the risk of CRBR are acceptably low. The planned methodology will use event trees and fault trees to identify the component failures combinations that could result in a loss of safety function. The PRA activities will specifically evaluate potential adverse interactions between plant systems.

References:

QCS721.1-1 Letter Longnecker to Check "Summary Report on the conduct of CRBRP Key Systems Reviews," dated Feb. 19, 1982.

QCS721.1-2 Letter Longnecker to Check "Probabilistic Risk Assessment (PRA) Program Plan," dated June 21, 1982

ENVIRONMENTAL QUALIFICATION OF SAFETY RELATED ELECTRICAL EQUIPMENT (A-24)

APPLICABILITY TO CRBRP:

This issue is applicable to CRBRP. CRBRP design include Class 1E Equipment which must be qualified for the environmental conditions in which it may be required to perform.

RESOLUTION FOR CRBRP:

Technical resolution of this issue has been achieved for Light Water Reactors through publication of NRC staff position contained in NUREG-0588 "Interim Staff Position on Environmental Qualification of Safety-Related Electrical Equipment." The issue is resolved on CRBRP through a program for environmentally qualifying safety-related electrical equipment which is consistent with the objectives and requirements contained in NUREG-0588, Rev. 1 as applied to CRBRP technology. This program is outlined in the response to NRC Question CS270.1, and in PSAR Section 3.11.

RESIDUAL HEAT REMOVAL REQUIREMENTS (A-31)

APPLICABILITY TO CRBRP:

This issue is not applicable to CRBRP. The issue concerns the capability of PWRs to go from hot to cold shutdown without the availability of off-site power.

A safe shutdown condition equivalent to a PWR cold shutdown condition is achieved in CRBRP when the plant is brought down from operating temperature to 600°F using the plant shutdown heat removal systems. At the 600°F temperature the plant is in a safe and stable state, and long term cooling is in effect. There is no subsequent requirement to proceed to another mode or state to effect long term shutdown.

The normal decay heat removal path is through the use of the main condenser and feedwater train. However, as the main condenser and feedwater train is not available upon loss of off-site power, the Steam Generator Auxiliary Heat Removal System (SGAHRS), which is a safety-related system, is provided for shutdown heat removal and long term decay heat removal, and is independent of the availability of off-site power.

CONTROL OF HEAVY LOADS NEAR SPENT FUEL (A-36)

APPLICABILITY TO CRBRP:

This issue is applicable to CRBRP. Although the design of CRBRP does not use spent fuel pools, this concern is applicable to the control of heavy loads over the Ex-Vessel Storage Tank Closure Head and Striker Plate, and over the Fuel Handling Cell.

RESOLUTION FOR CRBRP:

Technical resolution for this issue has been achieved through publication of NRC staff position contained in NUREG-0612, "Control of Heavy Loads at Nuclear Power Plants".

The issue is resolved for CRBRP by the application of a single-failure proof crane (in accordance with NUREG-0554, "Single Failure Proof Cranes for Nuclear Power Plants") in both the RSB and RCB for all critical lifts. The Project application of NUREG-0612 is presented in response to NRC Question CS410.3.

SEISMIC DESIGN CRITERIA (A-40)

APPLICABILITY TO CRBRP:

This issue is applicable to CRBRP. The issue concerns the conservatism of certain aspects of the overall seismic design criteria.

RESOLUTION FOR CRBRP:

Technical resolution for this issue has been effected on CRBRP. The seismic design bases and the seismic design of CRBRP conform to the current NRC criteria. CRBRP seismic design criteria are described in PSAR Section 3.7. NRC have not established any other bases which would render conformance to the current criteria inadequate.

SHUTDOWN DECAY HEAT REMOVAL REQUIREMENTS (A-45)

APPLICABILITY TO CRBRP:

This issue is applicable to CRBRP. This issue concerns the sufficiency of plant capability to remove decay heat. CRBRP must have a highly reliable capability to remove decay heat from the reactor.

RESOLUTION FOR CRBRP:

Resolution for CRBRP for this issue has been accomplished by incorporating into the design, multiple, independent, and highly reliable heat transport paths, any one of these paths having sufficient capacity to be able to remove the reactor decay heat by itself. The various heat removal paths and their operating modes embody substantial diversity.

CRBRP Heat Transport System uses three independent loops each of which provides a separate path from the reactor vessel to the ultimate heat sinks. The normal heat removal path includes the main condenser and feedwater train which is used for normal operation and some shutdown heat removal conditions. However, for each path an alternative safety-related path is provided, through the Steam Generator Auxiliary Heat Removal System (SGAHRS) which provides its own heat sinks. Thus, it is not necessary to rely upon the main condenser and feedwater train, since SGAHRS is available for all anticipated plant events.

The SGAHRS system includes the Auxiliary Feedwater Subsystem (AFWS) and Protected Air Cooled Condensers (PACCs) which serve as alternative heat sinks.

The AFWS provides water make-up to the closed loops between the steam generators and the PACCs. The AFWS includes two motor driven and one steam-turbine driven pumps.

The sodium in the Primary and Intermediate Systems of the HTS loops is always at temperatures well below the flash point. Thus, in the unlikely event of a sodium pipe leak in any loop there will not be a loss of heat removal capability due to loss of coolant inventory through flashing. Also, degradation of one loop will not affect heat removal capability in either of the other two loops.

Thus, the plant configuration provides multiple independent paths through the Heat Transport System, which contributes to the high reliability of the plant systems for removing reactor decay heat. These capabilities are discussed in PSAR Section 5.6 and 5.6.1.

CRBRP provides an additional path for decay heat removal, the Direct Heat Removal Service. This system provides a diverse heat removal path to yet another redundant and diverse set of air cooled heat exchangers. This is described in PSAR Section 5.6.2.

SEISMIC QUALIFICATION OF EQUIPMENT IN OPERATING PLANTS (A-46)

APPLICABILITY TO CRBRP:

This issue is not applicable to CRBRP. The issue is whether operating plants must be reassessed to assure the adequacy of their seismic qualification of equipment. Construction of the Project has not yet commenced and thus, it is not an operating Plant. CRBRP resolution of USI A-40 assures the adequacy of Seismic Design Criteria applied to it.

SAFETY IMPLICATIONS OF CONTROL SYSTEMS (A-47)

APPLICABILITY TO CRBRP:

This issue is applicable to CRBRP. CRBRP is dependent upon the proper functioning of control systems in order to maintain the plant in a safe condition for all normal operations and accidents. This issue concerns the potential for transients or accidents being made more severe as a result of control system failures or malfunctions. These failures or malfunctions may occur independently or as a result of the accident or transient under consideration.

RESOLUTION FOR CRBRP:

Technical resolution for this issue has been effected on CRBRP. Design features ensure that control system failures will not prevent automatic or manual initiation and operation of any safety system equipment required to trip the plant or to maintain the plant in a safe shutdown condition following any anticipated operational occurrence or accident. This has been accomplished by providing independence and physical separation between safety system trains and between safety and non-safety systems. For the latter, as a minimum, isolation devices are provided. These devices preclude the propagation of non-safety system equipment faults to the protection systems.

Also, to ensure that the operation of safety system equipment is not impaired, the single-failure criterion has been applied in the plant design. PSAR Section 7.2.2 discusses Plant Protection System (PPS) - Control System interaction. The CRBRP PPS is composed of two independent subsystems, either of which is capable of bringing the plant to a safe shutdown condition.

Further, these two subsystems employ diverse trip functions for PPS activation. Therefore, for any Design Basis transient, there is always more than one trip function provided by these two totally independent subsystems to activate the PPS and terminate the ensuing transient. Details of this design are described in PSAR Section 7.2, and Table 7.2-2.

A wide range of bounding transients and accidents is presently analyzed to ensure that the postulated events would be adequately mitigated by the safety systems. In addition, systematic reviews of safety systems have been performed with the goal of ensuring that the control system failures will not defeat safety system action. The worst conditions for each given type of transient are assumed in the accident analyses. This information is provided in PSAR Chapter 15.

HYDROGEN CONTROL MEASURES AND EFFECTS OF HYDROGEN BURNS ON SAFETY EQUIPMENT-A-48

APPLICABILITY TO CRBRP

This issue is not applicable to CRBRP. Design basis accidents within the CRBRP containment do not lead to the generation of hydrogen. Accordingly, there is no effect of hydrogen burns which could impact the capability of safety-related equipment to perform its intended safety function. However, accidents beyond the design basis involving hypothetical core disruptive accidents may produce hydrogen as a result of sodium-concrete interactions. The control and burning of the hydrogen from a hypothetical core disruptive accident is addressed in the CRBRP Thermal Margin Beyond Design Basis (CRBRP-3, Vol. 2). In the TMBDB scenario, the hydrogen is ignited in the containment atmosphere by sodium burning with the oxygen in containment. CRBRP-3, Vol. 2 also demonstrates how containment integrity is maintained.