Scientific Notebook 951E

— Sample Custody Book from the Corrosion Group

Table of Contents

Material	Sample ID/Heat Number	Page #
304L SS	T0954	1 – 15
316L SS	P80746	16 – 23
Cu Alloys	6681-C10200, M5459-C61300	24 – 28
Alloy 825	HH4371FG	29 – 42
Alloy 625	XX9936AG	43 – 44
Alloy C-22	2277-8-3175	45 – 48
Alloy C-22	2277-3-3292	49 – 52
Alloy C-22	2277-3-3266	53 – 121
Alloy C-22	2277-6-3120	122 – 132
Alloy C-22	2277-1-3164	133 – 134
Alloy C-22	2277-1-3113	135 – 136
Alloy C-22	2277-2-7542	137 – 138
Alloy C-22	2277-7-3101	139 – 140
Alloy C-22	2277-6-3193	141 – 142

Material: 304L SS
Sample ID/Heat #:
T0954

Page numbers: 1 - 15

2

CENTER FOR NUCLEAR WASTE REGULATORY ANALYSES TECHNICAL OPERATING PROCEDURE	Proc. TOP-012 Revision 0 Page 10 of 9

SAMPLE CUSTODY ENTRY FORM

SAMPLE IDENTIFICATION (Mandatory) T0954

SAMPLE DESIGNATOR _____

DESCRIPTION OF SAMPLE (Mandatory)

TYPE 304L STAINLESS STEEL

REFERENCE TOP or SCIENTIFIC NOTEBOOK ENTRY _____

AMOUNT of SAMPLE 1 pc. **SIZE** 5" x 3" x 1/2"

DATE of SAMPLE RECEIPT (Mandatory) 10/13/88

DATE of LOG ENTRY (Mandatory) 1/31/91 **by** W J Machowski

SAMPLE STORAGE LOCATION (Mandatory)

Sa RI BLDG #57

Collection Site: _____

Supplier: _____

Other: _____

CNWRA FORM TOP-004

Specimen Machining Documentation Form

Purchase/Work Order Number			
Material Identification		304L	
Material Heat Number		T0954	
CNWRA Requestor		Darrell Dunn	
Vendor		SwRI Machine shop	
Specimen Description (CNWRA Drawing Number, ASTM Standard)		20.06002.01.322.017	
To be Completed Prior to Order		**To be Completed upon Receipt of Order**	
Date	2-16-06	**Date**	2/27/06
Material Supplied to Vendor (Y/N)	Y	**Remaining Stock Material Returned From Vendor (Y/N)**	Y
Material Marked with Heat Number and Rolling Direction (Y/N)	Y	**Remaining Stock Material Marked with Heat Number and Rolling Direction (Y/N)**	Y
Dimensions of Material stock provided (L x W x H)	12" 6"	**Remaining Stock Material Dimensions (L x W x H)**	12" 6"
Specimen Quantity Ordered	1	**Specimen Quantity Received**	1
Dimensional Inspection Required (Y/N)	Y	**Dimensional Inspection Provided (Y/N)**	Y
Marked Containment Provided (Y/N)	Y	**Marked Containment Used (Y/N)**	Y
Documented in Scientific Notebook Number/Page Number			
NCR Number (if applicable)			

Signature 2/16/06 Date

Darrell S. Dunn
Division 18 Bldg 128
Phone: 6090
Fax: 6965

Drawing 20.06002.01.322.017
Sputter Target
Page 1 of 1
Dimensional tolerance +/- 0.010" unless otherwise specified
Material: Specified at time of order

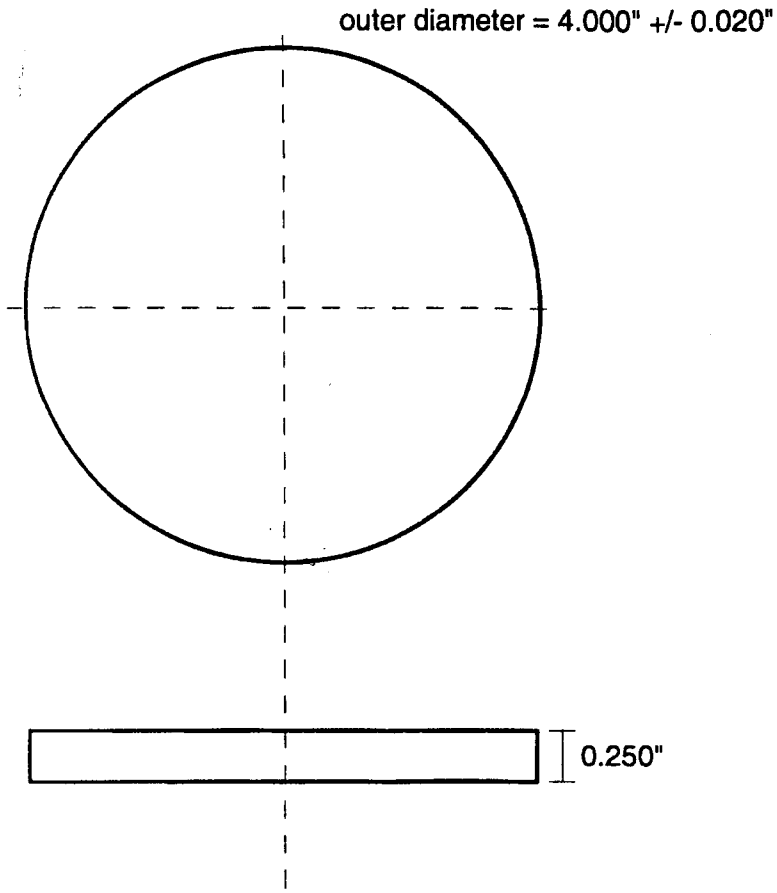

Procedure 105-W1.821
Project #
TOTAL PCS. INSPECTED 5
TOTAL PCS. ACCEPTED 5
TOTAL PCS. REJECTED 0
"NR #" IF REJECTS NA
INSPECTOR
DATE 2-27-06

LOCATION C031 MS
J.C. # 82641
EQUIPMENT
Mic 009976 due 1-13-07
Caliper 005081 due 12-14-06

304L HT# T0954
C22 HT# 2277-3-3266
825 HT# H44371 FC
316L HT# P80746
516L HT# 084944

Darrell S. Dunn 2/6/06
Darrell S. Dunn date

Vijay Jain 2/7/06
Vijay Jain date

Bob Brient 2/7/06
Bob Brient date

Darrell S. Dunn
Division 18 Bldg 128
Phone: 6090
Fax: 6965

Drawing 20.06002.01.322.017
Sputter Target
Page 1 of 1
Dimensional tolerance +/- 0.010" unless otherwise specified
Material: Specified at time of order

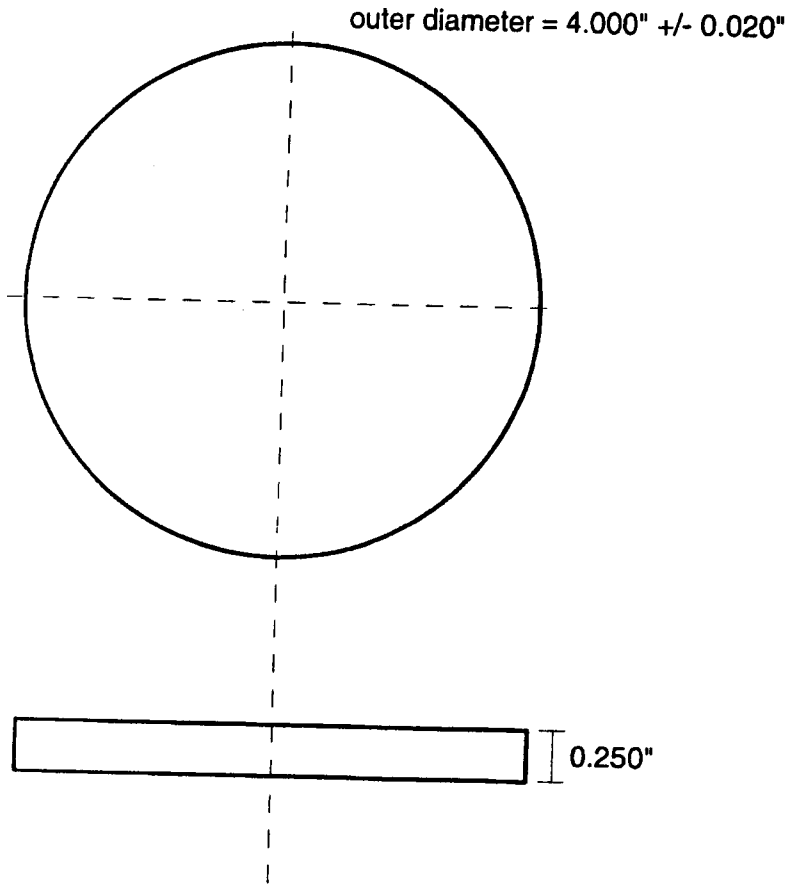

Darrell S. Dunn 2/6/06
Darrell S. Dunn date

2/7/06
Vijay Jain date

2/7/06
Bob Brient date

Specimen Machining Documentation Form

Purchase/Work Order Number			
Material Identification		304L	
Material Heat Number		T0954	
CNWRA Requestor		Darrell Dunn	
Vendor		SWRI machine Shop	
Specimen Description (CNWRA Drawing Number, ASTM Standard)		20.06002.01.322.020	
To be Completed Prior to Order		**To be Completed upon Receipt of Order**	
Date	6/7/06	**Date**	
Material Supplied to Vendor (Y/N)	Y	**Remaining Stock Material Returned From Vendor (Y/N)**	Y
Material Marked with Heat Number and Rolling Direction (Y/N)	Y	**Remaining Stock Material Marked with Heat Number and Rolling Direction (Y/N)**	Y
Dimensions of Material stock provided (L x W x H)	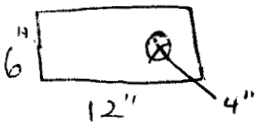	**Remaining Stock Material Dimensions (L x W x H)**	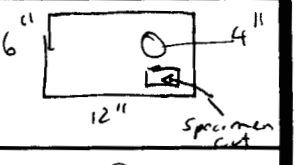
Specimen Quantity Ordered	8	**Specimen Quantity Received**	8
Dimensional Inspection Required (Y/N)	Yes	**Dimensional Inspection Provided (Y/N)**	Y
Marked Containment Provided (Y/N)	Yes	**Marked Containment Used (Y/N)**	Y
Documented in Scientific Notebook Number/Page Number			
NCR Number (if applicable)			

Signature 6/7/06 Date

Darrell S. Dunn
Division 18 Bldg 128
Phone: 6090
Fax: 6965

Flat Metal Sensor Element
Drawing 20.06002.01.322.020
Page 1 of 2
Dimensional tolerance +/- 0.010" unless otherwise specified
Material: Specified at time of order

Specimen Thickness +/- Tolerance: 0.062" +/- 0.003"

MATERIAL	QUANTITY
304L SS	8
A516 STEEL	8

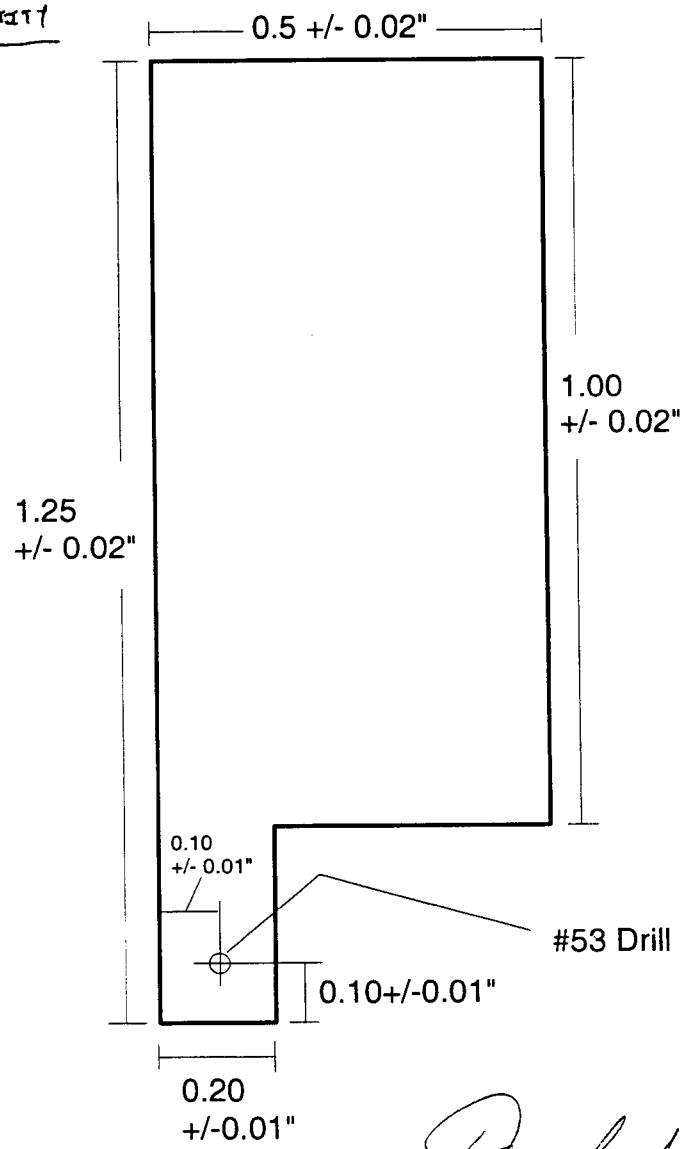

Darrell S. Dunn — 5/30/06 date

Vijay Jain — 5/31/06 date

Bob Brient — 5/31/06 date

Darrell S. Dunn
Division 18 Bldg 128
Phone: 6090
Fax: 6965

Flat Metal Sensor Element
Drawing 20.06002.01.322.020
Page 2 of 2
Dimensional tolerance +/- 0.010" unless otherwise specified
Material: Specified at time of order

Specimen Thickness +/- Tolerance: 0.062" +/- 0.003"

MATERIAL	QUANTITY
Alloy 22	16

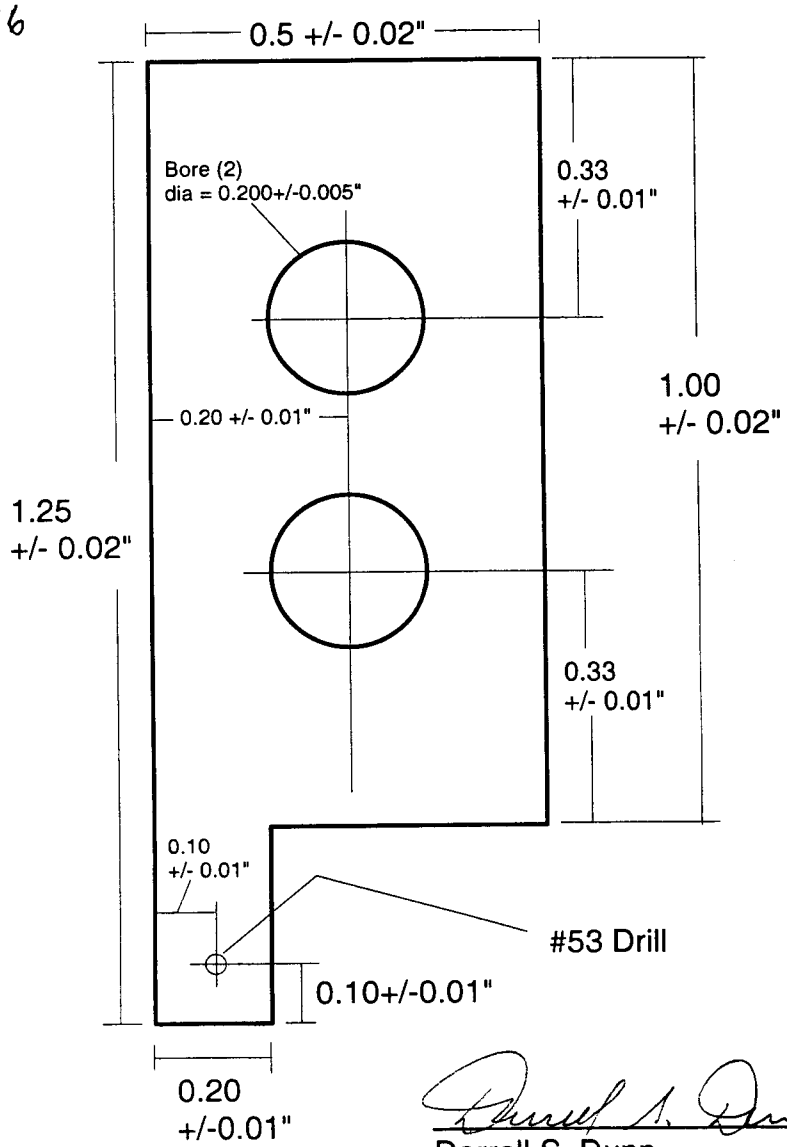

Darrell S. Dunn — 5/30/06 date

Vijay Jain — 5/31/06 date

Bob Brient — 5/31/06 date

Darrell S. Dunn
Division 18 Bldg 128
Phone: 6090
Fax: 6965

Flat Metal Sensor Element
Drawing 20.06002.01.322.020
Page 2 of 2
Dimensional tolerance +/- 0.010" unless otherwise specified
Material: Specified at time of order

Specimen Thickness +/- Tolerance: 0.062" +/- 0.003"

MATERIAL	QUANTITY
Alloy 22	16

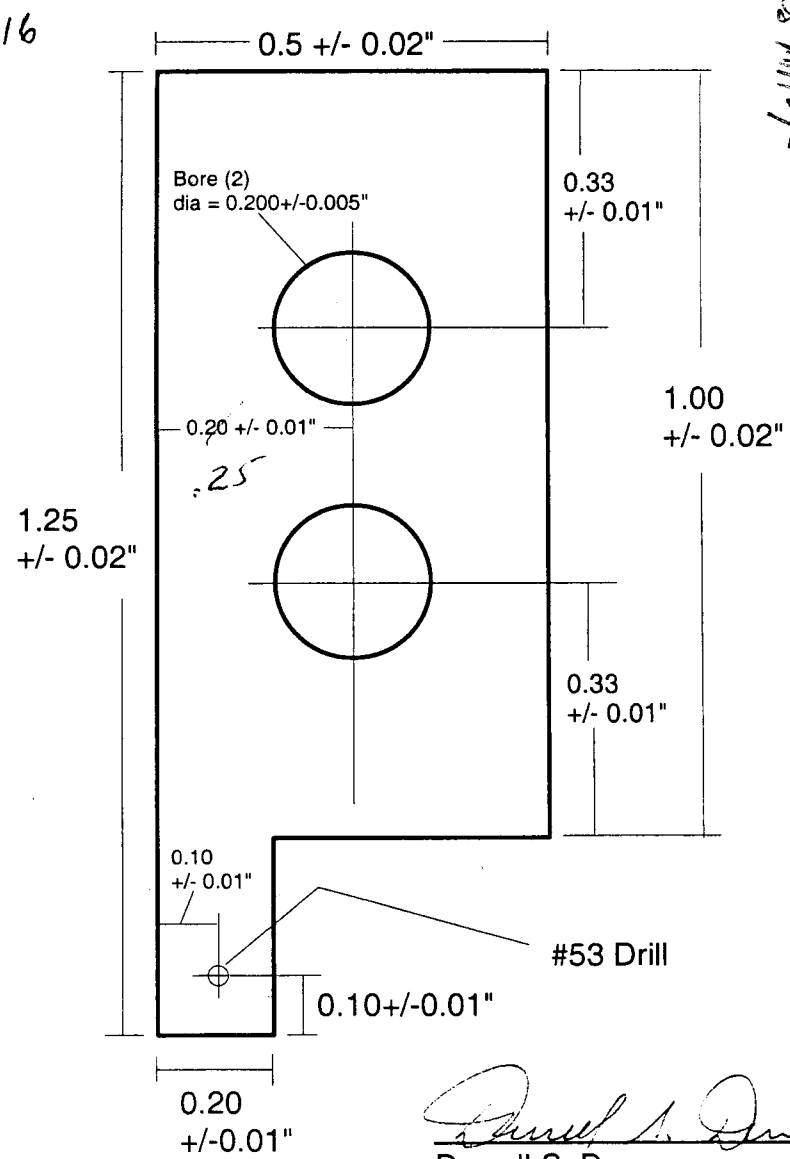

Procedure
Project #
TOTAL PCS. INSPECTED
TOTAL PCS. ACCEPTED
TOTAL PCS. REJECTED
"NR #" IF REJECTS
INSPECTOR
LOCATION
EQUIPMENT
DATE 6/26/06

Darrell S. Dunn 5/30/06
Darrell S. Dunn date

Vijay Jain 5/31/06
Vijay Jain date

Bob Brient 5/31/06
Bob Brient date

Darrell S. Dunn
Division 18 Bldg 128
Phone: 6090
Fax: 6965

Flat Metal Sensor Element
Drawing 20.06002.01.322.020
Page 1 of 2
Dimensional tolerance +/- 0.010" in inless otherwise specified
Material: Specified at time of order

Specimen Thickness +/- Tolerance: 0.062" +/- 0.003"

MATERIAL	QUANTITY
304L SS	8
A516 STEEL	8

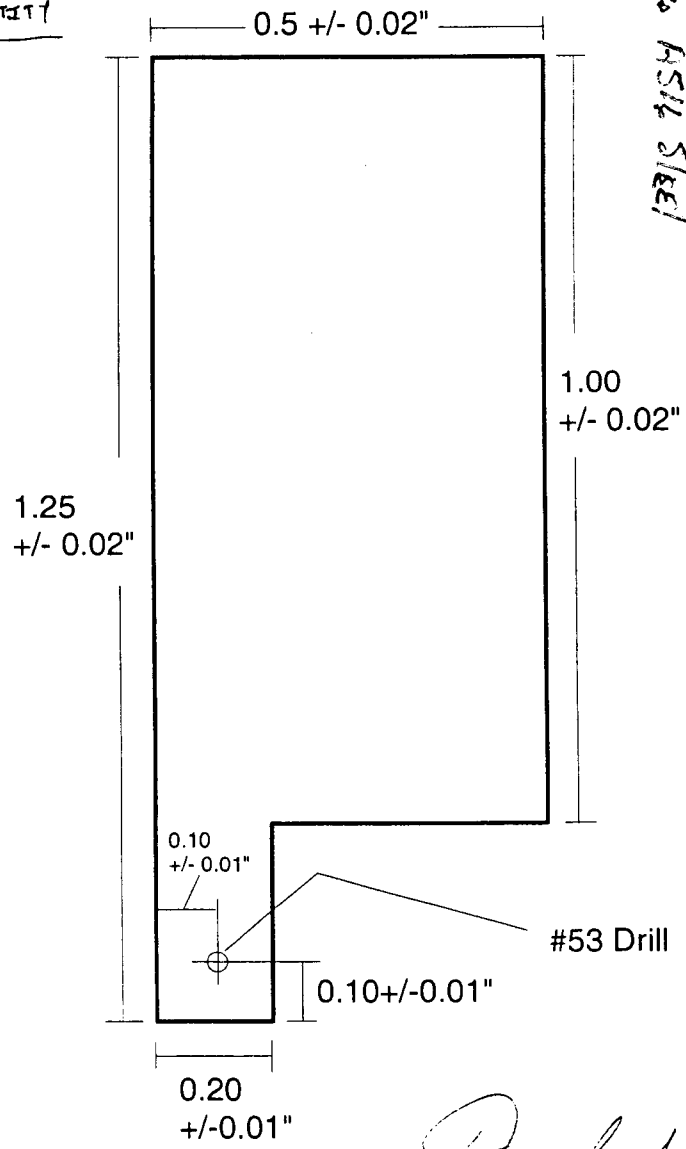

Procedure:
Project #
TOTAL PCS. INSPECTED 16
TOTAL PCS. ACCEPTED 16
TOTAL PCS. REJECTED 0
"NR #" IF REJECTS NA
INSPECTOR SWRI 24 QA
LOCATION
J.C. # 83182
EQUIPMENT
Cal 005081 Due 12-14-06
DATE 6/26/06

8 pcs. 304L SS
8 pcs A516 Steel

Darrell S. Dunn 5/30/06
Darrell S. Dunn date

Vijay Jain 5/31/06
Vijay Jain date

Bob Brient 5/31/06
Bob Brient date

Hundal (Andy) Jung SwRI-CNWRA Phone: (210)522-4238 Fax: (210)522-6081 Email: hjung@swri.org	CNWRA Drawing: 20.06002.02.322.021 Dimension Tolerance +/-0.005" unless otherwise specified 16 rms surface finish	To be completed at time of order Material: 304 SS Heat: T0954 Specimen orientation: Other:

Cylindrical Hollow-Shaped Corrosion Samples

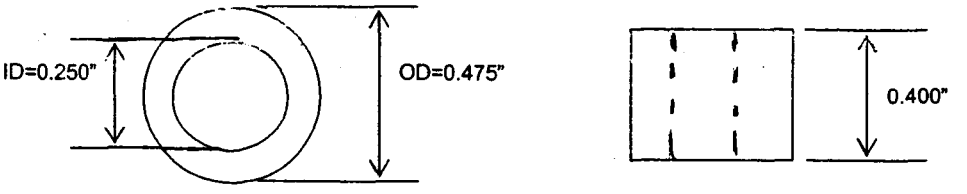

Initiated by H. Jung Date 8/13/07

Review by K. Axler Date 8/15

Quanity = 6

QA Approval R. Brient Date 8/15/07

Specimen Machining Documentation Form

Purchase/Work Order Number			
Material Identification		304 SS	
Material Heat Number		T0954	
CNWRA Requestor		(Anoy) Hundai Jung	
Vendor		SwRI Machine Shop	
Specimen Description (CNWRA Drawing Number, ASTM Standard)		20.06002.02.322.021	
To be Completed Prior to Order		**To be Completed upon Receipt of Order**	
Date	8/20/07	**Date**	9/19/07
Material Supplied to Vendor (Y/N)	Y	**Remaining Stock Material Returned From Vendor (Y/N)**	Y
Material Marked with Heat Number and Rolling Direction (Y/N)	Y	**Remaining Stock Material Marked with Heat Number and Rolling Direction (Y/N)**	Y
Dimensions of Material stock provided (L x W x H)	6" 12"	**Remaining Stock Material Dimensions (L x W x H)**	6" 12"
Specimen Quantity Ordered	6	**Specimen Quantity Received**	6
Dimensional Inspection Required (Y/N)	Y	**Dimensional Inspection Provided (Y/N)**	Y
Marked Containment Provided (Y/N)	Y	**Marked Containment Used (Y/N)**	Y
Documented in Scientific Notebook Number/Page Number			
NCR Number (if applicable)			

Signature 8/20/07 Date

20.06002.01.322 13

Hundal (Andy) Jung SwRI-CNWRA Phone: (210)522-4238 Fax: (210)522-6081 Email: hjung@swri.org	CNWRA Drawing: 20.06002.02.322.021 Dimension Tolerance +/-0.005" unless otherwise specified 16 rms surface finish	To be completed at time of order Material: 304 SS Heat: T0954 Specimen orientation: Other:

Cylindrical Hollow-Shaped Corrosion Samples

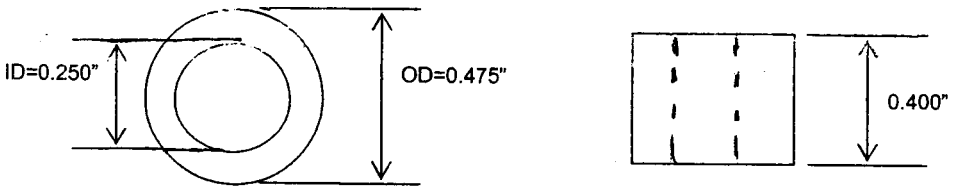

Initiated by H. Jung Date 8/13/07

Review by K. Axler Date 8/15

Quanity = 6

QA Approval R. Brient Date 8/15/07

Procedure: IQS-WI-281
Project #
TOTAL POS. INSPECTED 8
TOTAL POS. ACCEPTED 8
TOTAL POS. REJECTED 0
"NR #" IF REJECTS
INSPECTOR
LOCATION CC3/MS
J.C. # 85149
EQUIPMENT Calipers 005081 Exp 12-15-07
DATE 9/19/07

Specimen Machining Documentation Form

Purchase/Work Order Number			
Material Identification		304L	
Material Heat Number		MY # T 0954	
CNWRA Requestor		~~Shah~~ Todd Martin	
Vendor		SwRI Machine Shop	
Specimen Description (CNWRA Drawing Number, ASTM Standard)		20.06002-01.322.020	
To be Completed Prior to Order		**To be Completed upon Receipt of Order**	
Date	12/17/07	**Date**	1/11/08
Material Supplied to Vendor (Y/N)	Y	**Remaining Stock Material Returned From Vendor (Y/N)**	Y
Material Marked with Heat Number and Rolling Direction (Y/N)	Y	**Remaining Stock Material Marked with Heat Number and Rolling Direction (Y/N)**	Y
Dimensions of Material stock provided (L x W x H)	6" 12"	**Remaining Stock Material Dimensions (L x W x H)**	6 12"
Specimen Quantity Ordered	8	**Specimen Quantity Received**	12
Dimensional Inspection Required (Y/N)	Y	**Dimensional Inspection Provided (Y/N)**	Y
Marked Containment Provided (Y/N)	Y	**Marked Containment Used (Y/N)**	Y
Documented in Scientific Notebook Number/Page Number			
NCR Number (if applicable)			

Signature

12/17/07
Date

Darrell S. Dunn
Division 18 Bldg 128
Phone: 6090
Fax: 6965

Flat Metal Sensor Element
Drawing 20.06002.01.322.020
Page 1 of 2
Dimensional tolerance +/- 0.010" unless otherwise specified
Material: Specified at time of order

Specimen Thickness +/- Tolerance: 0 [redacted] +/- 0.003"
.125

MATERIAL	QUANTITY
304L SS	8 - 12
A516 STEEL	8 - 12

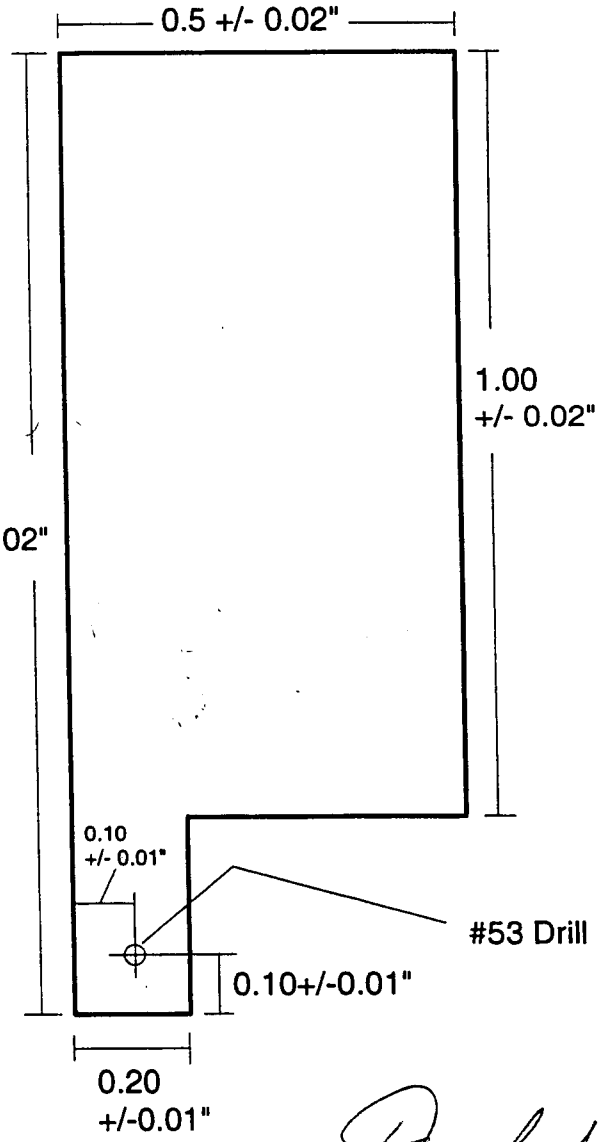

304L SS

Procedure: 105-WL-821
Project #
TOTAL PCS. INSPECTED 12
TOTAL PCS. ACCEPTED 12
TOTAL PCS. REJECTED 0
"NR #" IF REJECTS NA
INSPECTOR
LOCATION J.C. # 85728
EQUIPMENT Cal 008051
DATE 1-14-08

A516 STEEL

Procedure: 105-WL-821
Project #
TOTAL PCS. INSPECTED 12
TOTAL PCS. ACCEPTED 12
TOTAL PCS. REJECTED 0
"NR #" IF REJECTS NA
INSPECTOR
LOCATION J.C. # 85728
EQUIPMENT Cal 008051
DATE 1-14-08

Darrell S. Dunn 5/30/06
Darrell S. Dunn date

Vijay Jain 5/31/06
Vijay Jain date

Bob Brient 5/31/06
Bob Brient date

Material: 316L SS
Sample ID/Heat #:
P80746

Page numbers: 16 - 23

CENTER FOR NUCLEAR WASTE REGULATORY ANALYSES

SAMPLE CUSTODY/CONTROL LOG ENTRY FORM

SAMPLE IDENTIFICATION (Mandatory) Type 316L SS P80746

SAMPLE DESIGNATION: Type 316L SS P80746

DESCRIPTION OF SAMPLE (Mandatory)

Type 316L SS Heat P80746

REFERENCE TOP OR SCIENTIFIC NOTEBOOK ENTRY

Notebook 009

AMOUNT OF SAMPLE / SIZE
1 piece 96" x 48" x ½"

DATE OF SAMPLE RECEIPT (Mandatory) December 28, 1988

DATE OF INITIAL LOG ENTRY (Mandatory) 4/4/1994 **BY** Narasi Sridhar

SAMPLE STORAGE LOCATION (Mandatory) Building 57

COLLECTION SITE (Reference Maps or Field Notes As Required)

PERSON(S) WHO COLLECTED SAMPLE(S)

Narasi Sridhar

SUPPLIER Eastern Stainless steel (Manufacturer) Earl Jorgensen Co (Supplier)

OTHER

CNWRA FORM TOP-004

Specimen Machining Documentation Form

Purchase/Work Order Number		05027848	
Material Identification 316L stainless steel			
Material Heat Number P80746			
CNWRA Requestor Xihua He			
Vendor Texas Toolmakers			
Specimen Description (CNWRA Drawing Number, ASTM Standard) 20-06022 01-322-002			
To be Completed Prior to Order		**To be Completed upon Receipt of Order**	
Date	7/12/2005	**Date**	7/20/05
Material Supplied to Vendor (Y/N)	Y	**Remaining Stock Material Returned From Vendor (Y/N)**	Y
Material Marked with Heat Number and Rolling Direction (Y/N)	Y	**Remaining Stock Material Marked with Heat Number and Rolling Direction (Y/N)**	Y
Dimensions of Material stock provided (L x W x H)	12"X12"X1/2" 0.5	**Remaining Stock Material Dimensions (L x W x H)**	12"X12"X0.5" with 6 cut off holes
Specimen Quantity Ordered	10	**Specimen Quantity Received**	10
Dimensional Inspection Required (Y/N)	Y	**Dimensional Inspection Provided (Y/N)**	Y
Marked Containment Provided (Y/N)	Y	**Marked Containment Used (Y/N)**	Y
Documented in Scientific Notebook Number/Page Number 729/20			
NCR Number (if applicable)			

He [illegible] 7/20/05

Signature Date

Specimen Machining Documentation Form

Purchase/Work Order Number			
Material Identification		316L	
Material Heat Number		P80746	
CNWRA Requestor		Darrell Dunn	
Vendor		SwRI Machine shop.	
Specimen Description (CNWRA Drawing Number, ASTM Standard)		20.06002.01.322.017	
To be Completed Prior to Order		**To be Completed upon Receipt of Order**	
Date	2-16-06.	**Date**	2/27/07
Material Supplied to Vendor (Y/N)	Y	**Remaining Stock Material Returned From Vendor (Y/N)**	Y
Material Marked with Heat Number and Rolling Direction (Y/N)	Y	**Remaining Stock Material Marked with Heat Number and Rolling Direction (Y/N)**	Y
Dimensions of Material stock provided (L x W x H)	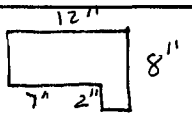	**Remaining Stock Material Dimensions (L x W x H)**	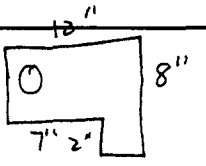
Specimen Quantity Ordered	1	**Specimen Quantity Received**	1
Dimensional Inspection Required (Y/N)	Y	**Dimensional Inspection Provided (Y/N)**	Y
Marked Containment Provided (Y/N)	Y	**Marked Containment Used (Y/N)**	Y
Documented in Scientific Notebook Number/Page Number			
NCR Number (if applicable)			

Signature 2/16/06 Date

Darrell S. Dunn
Division 18 Bldg 128
Phone: 6090
Fax: 6965

Drawing 20.06002.01.322.017
Sputter Target
Page 1 of 1
Dimensional tolerance +/- 0.010" unless otherwise specified
Material: Specified at time of order

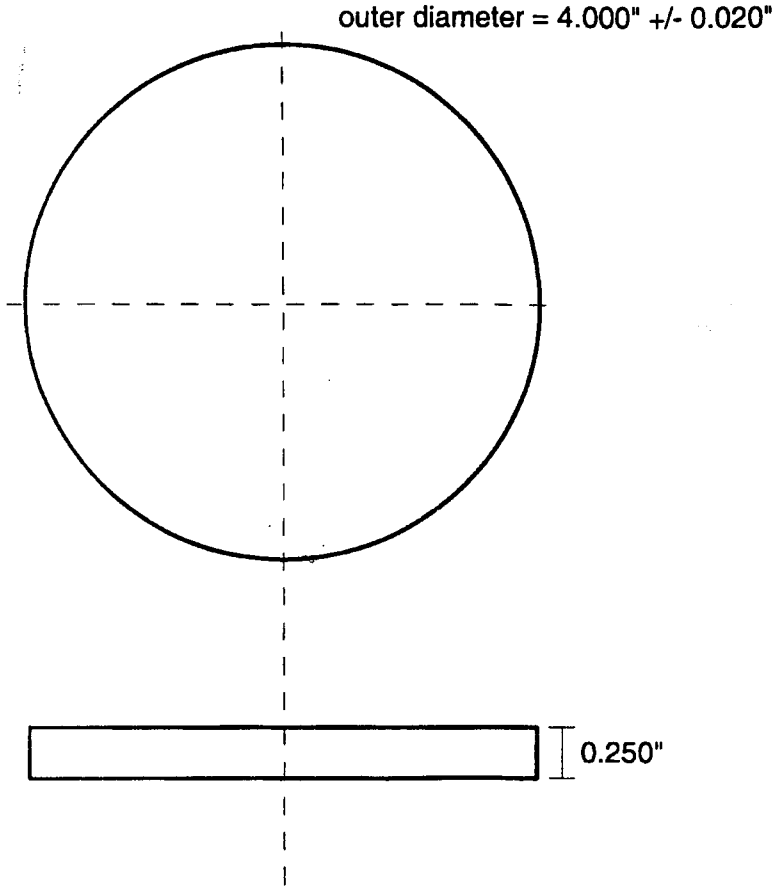

Procedure 105-W1.821
Project #
TOTAL PCS. INSPECTED 5
TOTAL PCS. ACCEPTED 5
TOTAL PCS. REJECTED 0
"NR #" IF REJECTS NA
INSPECTOR

LOCATION CC31 MS
J.C. # 82641
EQUIPMENT
Mic 009976 Due 1-13-07
Calipers 005081 Due 12-14-06
DATE 2-27-06

304L HT# T0954
C22 HT# 2277-3-3266
825 HT# H44371 FC
316L HT# P80746
516L HT# 084944

Darrell S. Dunn 2/6/06
Darrell S. Dunn date

Vijay Jain 2/7/06
Vijay Jain date

Bob Brient 2/7/06
Bob Brient date

Darrell S. Dunn
Division 18 Bldg 128
Phone: 6090
Fax: 6965

Drawing 20.06002.01.322.017
Sputter Target
Page 1 of 1
Dimensional tolerance +/- 0.010" unless otherwise specified
Material: Specified at time of order

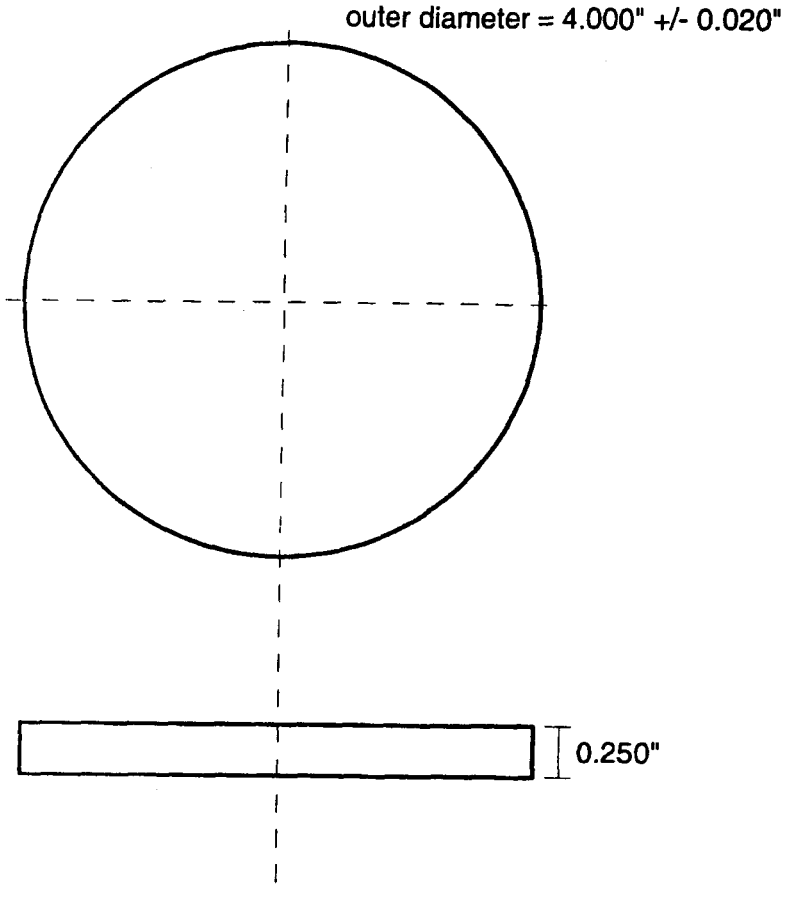

Darrell S. Dunn 2/6/06
Darrell S. Dunn date

2/7/06
Vijay Jain date

2/7/06
Bob Brient date

Specimen Machining Documentation Form

Purchase/Work Order Number			
Material Identification		316 L	
Material Heat Number		P80746	
CNWRA Requestor		Ken chiang	
Vendor		Swai Machine shop	
Specimen Description (CNWRA Drawing Number, ASTM Standard)		BKJ 5/29/07 ~~20.01402.0~~ 20.01402.571.019R1	
To be Completed Prior to Order		**To be Completed upon Receipt of Order**	
Date	5/29/07	**Date**	
Material Supplied to Vendor (Y/N)	Y	**Remaining Stock Material Returned From Vendor (Y/N)**	
Material Marked with Heat Number and Rolling Direction (Y/N)	Y	**Remaining Stock Material Marked with Heat Number and Rolling Direction (Y/N)**	
Dimensions of Material stock provided (L x W x H)	8½" x 12" x 0.5" 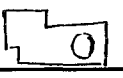 cut out	**Remaining Stock Material Dimensions (L x W x H)**	
Specimen Quantity Ordered	20	**Specimen Quantity Received**	
Dimensional Inspection Required (Y/N)	Y	**Dimensional Inspection Provided (Y/N)**	
Marked Containment Provided (Y/N)	Y	**Marked Containment Used (Y/N)**	
Documented in Scientific Notebook Number/Page Number			
NCR Number (if applicable)			

Signature 5/29/07 Date

Specimen Machining Documentation Form

Purchase/Work Order Number			
Material Identification		316L	
Material Heat Number		P 80746	
CNWRA Requestor		Ken Chiang	
Vendor		Swri Machine Shop	
Specimen Description (CNWRA Drawing Number, ASTM Standard)		20-R9471-002	
To be Completed Prior to Order		**To be Completed upon Receipt of Order**	
Date	5/29/07	**Date**	7/16/07
Material Supplied to Vendor (Y/N)	Y	**Remaining Stock Material Returned From Vendor (Y/N)**	Y
Material Marked with Heat Number and Rolling Direction (Y/N)	Y	**Remaining Stock Material Marked with Heat Number and Rolling Direction (Y/N)**	Y
Dimensions of Material stock provided (L x W x H)	6" x 3" x 0.05"	**Remaining Stock Material Dimensions (L x W x H)**	6" x 2" x 0.05"
Specimen Quantity Ordered	20	**Specimen Quantity Received**	20
Dimensional Inspection Required (Y/N)	Y	**Dimensional Inspection Provided (Y/N)**	Y
Marked Containment Provided (Y/N)	Y	**Marked Containment Used (Y/N)**	Y
Documented in Scientific Notebook Number/Page Number			
NCR Number (if applicable)			

Signature 5/29/07 Date

Material: Cu Alloys

Copper-Nickel 70/30
Sample ID/Heat #:
7037/6132A – C71500

OFHC Copper
Sample ID/Heat#:
6681 – C10200

Copper-Aluminum
M5459 – C61300

Page numbers: 24 - 28

CENTER FOR NUCLEAR WASTE REGULATORY ANALYSES TECHNICAL OPERATING PROCEDURE	Proc. TOP-012 Revision 0 Page 10 of 9

SAMPLE CUSTODY ENTRY FORM

SAMPLE IDENTIFICATION (Mandatory) 7037/6132A

SAMPLE DESIGNATOR

DESCRIPTION OF SAMPLE (Mandatory)

C71500 COPPER-NICKEL 70/30

REFERENCE TOP or SCIENTIFIC NOTEBOOK ENTRY

AMOUNT of SAMPLE SEE ATTACHMENT SIZE

DATE of SAMPLE RECEIPT (Mandatory) 8/29/89

DATE of LOG ENTRY (Mandatory) 1/31/91 **by** W J Mackowski

SAMPLE STORAGE LOCATION (Mandatory)

SwRI BLDG #57

Collection Site:

Supplier:

Other:

CNWRA FORM TOP-004

SOUTHWEST RESEARCH INSTITUTE
San Antonio, Texas 78284

Page:

Project:

C71500

4 ea		12" x 39" x 1/2"
1 ea		12" x 15" x 1/2"
4 ea		6" x 3" x 1/2"
1 ea		5" x 3" x 1/2"

Date:

Signature:

(SwR 17) Rev 6/75

CENTER FOR NUCLEAR WASTE REGULATORY ANALYSES TECHNICAL OPERATING PROCEDURE	Proc. TOP-012 Revision 0 Page 10 of 9

SAMPLE CUSTODY ENTRY FORM

SAMPLE IDENTIFICATION (Mandatory) 6681

SAMPLE DESIGNATOR

DESCRIPTION OF SAMPLE (Mandatory)

C10200 OFHC COPPER

REFERENCE TOP or SCIENTIFIC NOTEBOOK ENTRY

AMOUNT of SAMPLE 7 PCS. ea. SIZE 12" x 48" x 1/2"

DATE of SAMPLE RECEIPT (Mandatory) 1/9/89

DATE of LOG ENTRY (Mandatory) 1/31/91 by A J Machowski

SAMPLE STORAGE LOCATION (Mandatory)

SwRI BLDG #57

Collection Site:

Supplier:

Other:

CNWRA FORM TOP-004

CENTER FOR NUCLEAR WASTE REGULATORY ANALYSES TECHNICAL OPERATING PROCEDURE	Proc. TOP-012 Revision 0 Page 10 of 9

SAMPLE CUSTODY ENTRY FORM

SAMPLE IDENTIFICATION (Mandatory) M 5459

SAMPLE DESIGNATOR _____

DESCRIPTION OF SAMPLE (Mandatory)

C61300 COPPER-ALUMINUM

REFERENCE TOP or SCIENTIFIC NOTEBOOK ENTRY _____

AMOUNT of SAMPLE 2 pcs. **SIZE** 12" x 39" x 1/2" 12" x 32" x 1/2"

DATE of SAMPLE RECEIPT (Mandatory) 8/23/89

DATE of LOG ENTRY (Mandatory) 1/31/91 **by** W J Machowski

SAMPLE STORAGE LOCATION (Mandatory)

SwRI BLDG #57

Collection Site: _____

Supplier: _____

Other: _____

CNWRA FORM TOP-004

Material: Alloy 825

Sample ID/Heat#: HH4371FG

Page numbers: 29 - 42

CENTER FOR NUCLEAR WASTE REGULATORY ANALYSES

SAMPLE CUSTODY/CONTROL LOG ENTRY FORM

SAMPLE IDENTIFICATION (Mandatory) Alloy 825, HH4371FG

SAMPLE DESIGNATION: Alloy 825 HH4371FG

DESCRIPTION OF SAMPLE (Mandatory)

Incoloy Alloy 825 Heat HH4371FG

REFERENCE TOP OR SCIENTIFIC NOTEBOOK ENTRY

Notebook 009

AMOUNT OF SAMPLE / SIZE
3 pieces: 21" x 24" x ½"
1 piece: 21" x 11 $^{3}/_{4}$" x ½"
9 pieces: 6" x 3" x ½"
1 piece: 11 ½" x 2" x ½"

DATE OF SAMPLE RECEIPT (Mandatory) 10/25/88

DATE OF INITIAL LOG ENTRY (Mandatory) 1/31/91 **BY** Walt J. Machowski

SAMPLE STORAGE LOCATION (Mandatory) Building 57

COLLECTION SITE (Reference Maps or Field Notes As Required)

PERSON(S) WHO COLLECTED SAMPLE(S)

Narasi Sridhar

SUPPLIER INCO alloys/Metal Goods

OTHER Correction to Initial Sample custody log entry

CNWRA FORM TOP-004

SOUTHWEST RESEARCH INSTITUTE
San Antonio, Texas 78284

Page:

Project:

			INCOLOY	825		HH4371FG			
3 ea		21" x 24" x 1/2"							
1 ea		21" x 11 3/4" x 1/2"							
9 ea		6" x 3" x 1/2"							
1 ea		11 1/2" x 2" x 1/2"							

Date:

Signature:

(SwR 17) Rev 6/75

CENTER FOR NUCLEAR WASTE REGULATORY ANALYSES

SAMPLE CUSTODY/CONTROL LOG ENTRY FORM

SAMPLE IDENTIFICATION (Mandatory) HR + 20 CR Alloy 825, HH4371FG

SAMPLE DESIGNATION: HR+20 CR 825

DESCRIPTION OF SAMPLE (Mandatory)

Alloy 825 HH4371FG was hot rolled and then cold rolled 20 percent.

REFERENCE TOP OR SCIENTIFIC NOTEBOOK ENTRY

No Scientific Notebook Entry

AMOUNT OF SAMPLE 1 piece **SIZE** 5 3/4" x 9"

DATE OF SAMPLE RECEIPT (Mandatory) 1995

DATE OF INITIAL LOG ENTRY (Mandatory) 5/31/05 **BY** Darrell Dunn

SAMPLE STORAGE LOCATION (Mandatory) Building 57

COLLECTION SITE (Reference Maps or Field Notes As Required)

PERSON(S) WHO COLLECTED SAMPLE(S)

Narasi Sridhar and Hersh Manaktala

SUPPLIER Samples cold rolled at Haynes International, IN

OTHER Original Alloy 825 heat also included in the sample custody log.

Size information 5 3/4" x 9" is the amount of material remaining that has not been previously used in tests

CNWRA FORM TOP-004

CENTER FOR NUCLEAR WASTE REGULATORY ANALYSES

SAMPLE CUSTODY/CONTROL LOG ENTRY FORM

SAMPLE IDENTIFICATION (Mandatory) HR + 36 CR Alloy 825, HH4371FG

SAMPLE DESIGNATION: HR+36 CR 825

DESCRIPTION OF SAMPLE (Mandatory)

Alloy 825 HH4371FG was hot rolled and then cold rolled 36 percent.

REFERENCE TOP OR SCIENTIFIC NOTEBOOK ENTRY

No Scientific Notebook Entry

AMOUNT OF SAMPLE 1 piece **SIZE** 5" x 17 1/2"

DATE OF SAMPLE RECEIPT (Mandatory) 1995

DATE OF INITIAL LOG ENTRY (Mandatory) 5/31/05 **BY** Darrell Dunn

SAMPLE STORAGE LOCATION (Mandatory) Building 57

COLLECTION SITE (Reference Maps or Field Notes As Required)

PERSON(S) WHO COLLECTED SAMPLE(S)

Narasi Sridhar and Hersh Manaktala

SUPPLIER Samples cold rolled at Haynes International, IN

OTHER Original Alloy 825 heat also included in the sample custody log.

Size information 5" x 17 1/2" is the amount of material remaining that has not been previously used in tests

CNWRA FORM TOP-004

CENTER FOR NUCLEAR WASTE REGULATORY ANALYSES

SAMPLE CUSTODY/CONTROL LOG ENTRY FORM

SAMPLE IDENTIFICATION (Mandatory) HR + 46 CR Alloy 825, HH4371FG

SAMPLE DESIGNATION: HR+46 CR 825

DESCRIPTION OF SAMPLE (Mandatory)

Alloy 825 HH4371FG was hot rolled and then cold rolled 46 percent.

REFERENCE TOP OR SCIENTIFIC NOTEBOOK ENTRY

No Scientific Notebook Entry

AMOUNT OF SAMPLE 1 piece **SIZE** 5" x 10"

DATE OF SAMPLE RECEIPT (Mandatory) 1995

DATE OF INITIAL LOG ENTRY (Mandatory) 5/31/05 **BY** Darrell Dunn

SAMPLE STORAGE LOCATION (Mandatory) Building 57

COLLECTION SITE (Reference Maps or Field Notes As Required)

PERSON(S) WHO COLLECTED SAMPLE(S)

Narasi Sridhar and Hersh Manaktala

SUPPLIER Samples cold rolled at Haynes International, IN

OTHER Original Alloy 825 heat also included in the sample custody log.

Size information 5" x 10" is the amount of material remaining that has not been previously used in tests

CNWRA FORM TOP-004

CENTER FOR NUCLEAR WASTE REGULATORY ANALYSES

SAMPLE CUSTODY/CONTROL LOG ENTRY FORM

SAMPLE IDENTIFICATION (Mandatory) HR + 61 CR Alloy 825, HH4371FG

SAMPLE DESIGNATION: HR+61 CR 825

DESCRIPTION OF SAMPLE (Mandatory)

Alloy 825 HH4371FG was hot rolled and then cold rolled 61 percent.

REFERENCE TOP OR SCIENTIFIC NOTEBOOK ENTRY

No Scientific Notebook Entry

AMOUNT OF SAMPLE 2 pieces **SIZE** 5 1/2" x 4" and 5 1/2" x 19 1/2"

DATE OF SAMPLE RECEIPT (Mandatory) 1995

DATE OF INITIAL LOG ENTRY (Mandatory) 5/31/05 **BY** Darrell Dunn

SAMPLE STORAGE LOCATION (Mandatory) Building 57

COLLECTION SITE (Reference Maps or Field Notes As Required)

PERSON(S) WHO COLLECTED SAMPLE(S)

Narasi Sridhar and Hersh Manaktala

SUPPLIER Samples cold rolled at Haynes International, IN

OTHER Original Alloy 825 heat also included in the sample custody log.

Size information 5 1/2" x 4" and 5 1/2" x 19 1/2" is the amount of material remaining that has not been previously used in tests

CNWRA FORM TOP-004

CENTER FOR NUCLEAR WASTE REGULATORY ANALYSES

SAMPLE CUSTODY/CONTROL LOG ENTRY FORM

SAMPLE IDENTIFICATION (Mandatory) 20 CR Alloy 825, HH4371FG

SAMPLE DESIGNATION: 20 CR 825

DESCRIPTION OF SAMPLE (Mandatory)

Alloy 825 HH4371FG that was cold rolled 20 percent

REFERENCE TOP OR SCIENTIFIC NOTEBOOK ENTRY

No Scientific Notebook Entry

AMOUNT OF SAMPLE 1 piece **SIZE** 5 1/2" x 15"

DATE OF SAMPLE RECEIPT (Mandatory) 1995

DATE OF INITIAL LOG ENTRY (Mandatory) 5/31/05 **BY** Darrell Dunn

SAMPLE STORAGE LOCATION (Mandatory) Building 57

COLLECTION SITE (Reference Maps or Field Notes As Required)

PERSON(S) WHO COLLECTED SAMPLE(S)

Narasi Sridhar and Hersh Manaktala

SUPPLIER Samples cold rolled at Haynes International, IN

OTHER Original Alloy 825 heat also included in the sample custody log.

CNWRA FORM TOP-004

CENTER FOR NUCLEAR WASTE REGULATORY ANALYSES

SAMPLE CUSTODY/CONTROL LOG ENTRY FORM

SAMPLE IDENTIFICATION (Mandatory) 30 CR Alloy 825, HH4371FG

SAMPLE DESIGNATION: 30 CR 825

DESCRIPTION OF SAMPLE (Mandatory)

Alloy 825 HH4371FG that was cold rolled 30 percent

REFERENCE TOP OR SCIENTIFIC NOTEBOOK ENTRY

No Scientific Notebook Entry

AMOUNT OF SAMPLE 1 piece **SIZE** 5 1/4" x 17 1/2"

DATE OF SAMPLE RECEIPT (Mandatory) 1995

DATE OF INITIAL LOG ENTRY (Mandatory) 5/31/05 **BY** Darrell Dunn

SAMPLE STORAGE LOCATION (Mandatory) Building 57

COLLECTION SITE (Reference Maps or Field Notes As Required)

PERSON(S) WHO COLLECTED SAMPLE(S)

Narasi Sridhar and Hersh Manaktala

SUPPLIER Samples cold rolled at Haynes International, IN

OTHER Original Alloy 825 heat also included in the sample custody log.

CNWRA FORM TOP-004

CENTER FOR NUCLEAR WASTE REGULATORY ANALYSES

SAMPLE CUSTODY/CONTROL LOG ENTRY FORM

SAMPLE IDENTIFICATION (Mandatory) 40 CR Alloy 825, HH4371FG

SAMPLE DESIGNATION: 40 CR 825

DESCRIPTION OF SAMPLE (Mandatory)

Alloy 825 HH4371FG that was cold rolled 40 percent

REFERENCE TOP OR SCIENTIFIC NOTEBOOK ENTRY

No Scientific Notebook Entry

AMOUNT OF SAMPLE 1 piece **SIZE** 5 1/4" x 18 1/2"

DATE OF SAMPLE RECEIPT (Mandatory) 1995

DATE OF INITIAL LOG ENTRY (Mandatory) 5/31/05 **BY** Darrell Dunn

SAMPLE STORAGE LOCATION (Mandatory) Building 57

COLLECTION SITE (Reference Maps or Field Notes As Required)

PERSON(S) WHO COLLECTED SAMPLE(S)

Narasi Sridhar and Hersh Manaktala

SUPPLIER Samples cold rolled at Haynes International, IN

OTHER Original Alloy 825 heat also included in the sample custody log.

CNWRA FORM TOP-004

CENTER FOR NUCLEAR WASTE REGULATORY ANALYSES

SAMPLE CUSTODY/CONTROL LOG ENTRY FORM

SAMPLE IDENTIFICATION (Mandatory) 50 CR Alloy 825, HH4371FG

SAMPLE DESIGNATION: 50 CR 825

DESCRIPTION OF SAMPLE (Mandatory)

Alloy 825 HH4371FG that was cold rolled 50 percent

REFERENCE TOP OR SCIENTIFIC NOTEBOOK ENTRY

No Scientific Notebook Entry

AMOUNT OF SAMPLE 1 piece **SIZE** 5" x 20 1/2"

DATE OF SAMPLE RECEIPT (Mandatory) 1995

DATE OF INITIAL LOG ENTRY (Mandatory) 5/31/05 **BY** Darrell Dunn

SAMPLE STORAGE LOCATION (Mandatory) Building 57

COLLECTION SITE (Reference Maps or Field Notes As Required)

PERSON(S) WHO COLLECTED SAMPLE(S)

Narasi Sridhar and Hersh Manaktala

SUPPLIER Samples cold rolled at Haynes International, IN

OTHER Original Alloy 825 heat also included in the sample custody log.

CNWRA FORM TOP-004

Specimen Machining Documentation Form

Purchase/Work Order Number			
Material Identification		825	
Material Heat Number		HH 4371 FC	
CNWRA Requestor		Darrell Dunn	
Vendor		SwRI Machine shop	
Specimen Description (CNWRA Drawing Number, ASTM Standard)		20.06002.01.327.017	
To be Completed Prior to Order		**To be Completed upon Receipt of Order**	
Date	2-16-06	**Date**	2/27/06
Material Supplied to Vendor (Y/N)	Y	**Remaining Stock Material Returned From Vendor (Y/N)**	Y
Material Marked with Heat Number and Rolling Direction (Y/N)	Y	**Remaining Stock Material Marked with Heat Number and Rolling Direction (Y/N)**	Y
Dimensions of Material stock provided (L x W x H)	21" 12"	**Remaining Stock Material Dimensions (L x W x H)**	21" 12"
Specimen Quantity Ordered	1	**Specimen Quantity Received**	1
Dimensional Inspection Required (Y/N)	Y	**Dimensional Inspection Provided (Y/N)**	Y
Marked Containment Provided (Y/N)	Y	**Marked Containment Used (Y/N)**	Y
Documented in Scientific Notebook Number/Page Number			
NCR Number (if applicable)			

Signature 2/16/06 Date

Darrell S. Dunn
Division 18 Bldg 128
Phone: 6090
Fax: 6965

Drawing 20.06002.01.322.017
Sputter Target
Page 1 of 1
Dimensional tolerance +/- 0.010" unless otherwise specified
Material: Specified at time of order

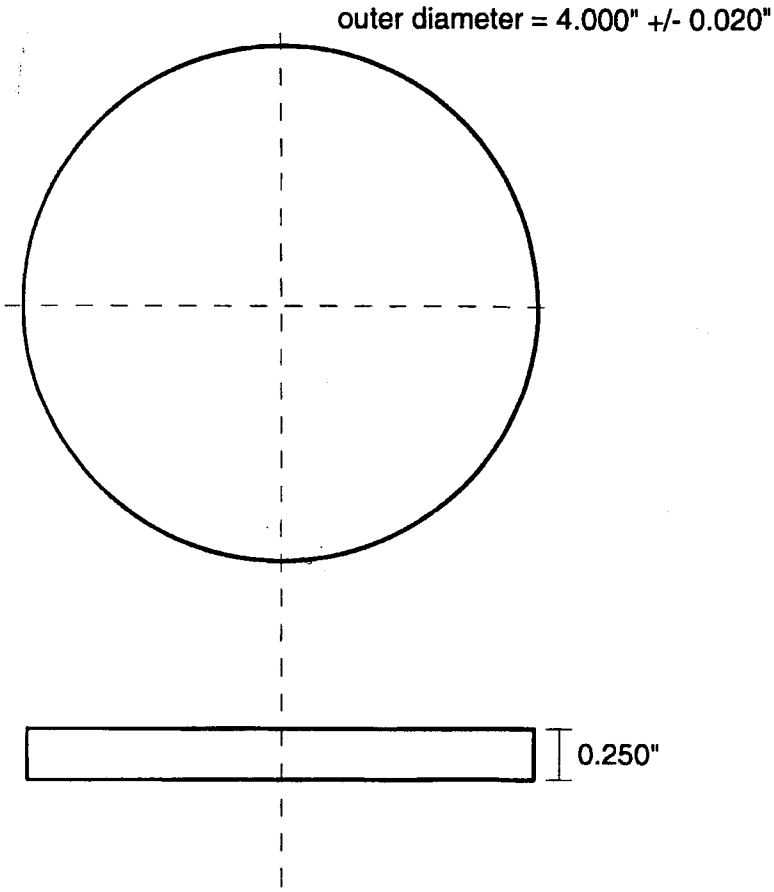

Procedure 105-W1.821
Project #
TOTAL PCS. INSPECTED 5
TOTAL PCS. ACCEPTED 5
TOTAL PCS. REJECTED 0
"NR #" IF REJECTS NA
INSPECTOR
LOCATION CC31 MS
J.C. # 82641
EQUIPMENT
Mic 009976 Due 1-13-07
Calipers 005081 Due 12-14-06
DATE 2-27-06

304L HT# T0954
C22 HT# 2277-3-3266
825 HT# H44371 FC
316L HT# P80746
516L HT# 084944

Darrell S. Dunn 2/6/06
Darrell S. Dunn date

Vijay Jain 2/7/06
Vijay Jain date

Bob Brient 2/7/06
Bob Brient date

Darrell S. Dunn
Division 18 Bldg 128
Phone: 6090
Fax: 6965

Drawing 20.06002.01.322.017
Sputter Target
Page 1 of 1
Dimensional tolerance +/- 0.010" unless otherwise specified
Material: Specified at time of order

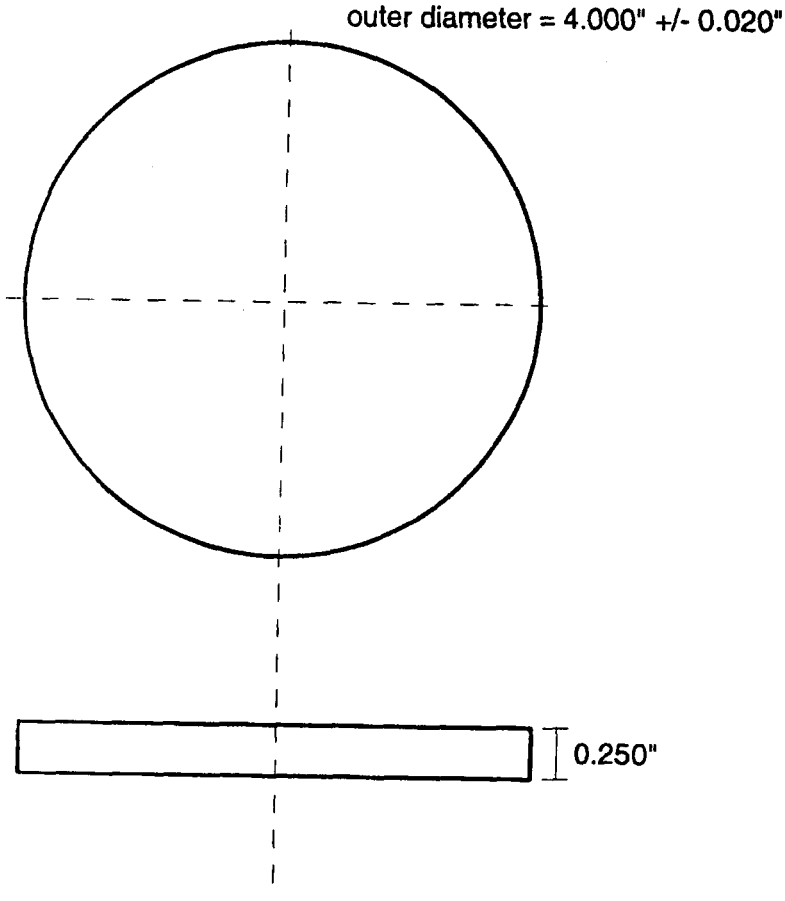

Darrell S. Dunn 2/6/06
Darrell S. Dunn date

2/7/06
Vijay Jain date

2/7/06
Bob Brient date

Material: Alloy 625
Sample ID/Heat#:

NX9936AG

Page numbers: 43 - 44

CENTER FOR NUCLEAR WASTE REGULATORY ANALYSES

SAMPLE CUSTODY/CONTROL LOG ENTRY FORM

SAMPLE IDENTIFICATION (Mandatory) Alloy 625, NX9936AG

SAMPLE DESIGNATION: Alloy 625 NX9936AG

DESCRIPTION OF SAMPLE (Mandatory)

Alloy 625 Heat NX9936AG

REFERENCE TOP OR SCIENTIFIC NOTEBOOK ENTRY

CNWRA 009

AMOUNT OF SAMPLE / SIZE
1 pieces: 25" x 13" x ½"

DATE OF SAMPLE RECEIPT (Mandatory) 5/27/1997

DATE OF INITIAL LOG ENTRY (Mandatory) 6/12/1997 **BY** Darrell S. Dunn

SAMPLE STORAGE LOCATION (Mandatory) Building 57

COLLECTION SITE (Reference Maps or Field Notes As Required)

PERSON(S) WHO COLLECTED SAMPLE(S)

Darrell S. Dunn

SUPPLIER INCO Alloys/Metal Samples

OTHER

CNWRA FORM TOP-004

Material: Alloy C-22

Sample ID/Heat#: 2277-8-3175

Page numbers: 45 - 48

CENTER FOR NUCLEAR WASTE REGULATORY ANALYSES

SAMPLE CUSTODY/CONTROL LOG ENTRY FORM

SAMPLE IDENTIFICATION (Mandatory) Alloy C-22, 2277-8-3175

SAMPLE DESIGNATION: Alloy C-22, 2277-8-3175

DESCRIPTION OF SAMPLE (Mandatory)

Alloy C-22, 2277-8-3175

REFERENCE TOP OR SCIENTIFIC NOTEBOOK ENTRY

CNWRA 009

AMOUNT OF SAMPLE / SIZE
1 piece: 44" x 24" x ½"

DATE OF SAMPLE RECEIPT (Mandatory) 3/14/1989

DATE OF INITIAL LOG ENTRY (Mandatory) 4/11/1994 **BY** Narasi Shidhar

SAMPLE STORAGE LOCATION (Mandatory) Building 57

COLLECTION SITE (Reference Maps or Field Notes As Required)

PERSON(S) WHO COLLECTED SAMPLE(S)

Narasi Sridhar

SUPPLIER Haynes International

OTHER Purchased through Corrosion Materials

CNWRA FORM TOP-004

SOUTHWEST RESEARCH INSTITUTE
San Antonio, Texas 78284

Page: 47

Project:

HASTELLOY C-22 2277-8-3175

1 ea		12" x 19½" x ½"
3 ea		6" x 3" x ½"
1 ea		5" x 3" x ½"

Date:

Signature:

(SwR 17) Rev 6/75

Darrell S. Dunn
SwRI-CNWRA
Phone: (210) 522-6090
Fax: (210) 522-5184

Cylindrical Test Specimen

CNWRA Drawing 20.01402.571.019

#5-40 thread centered minimum 0.250" deep

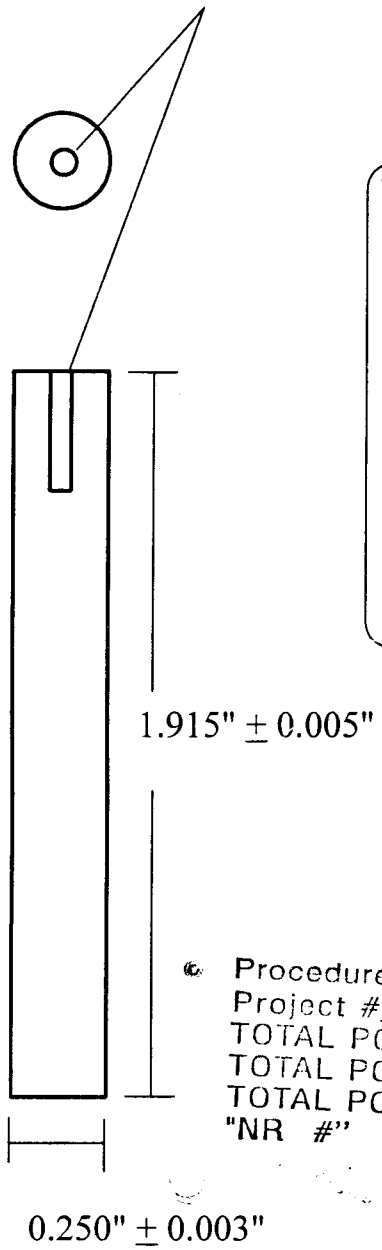

This information is to be completed at time of fabrication

Material: ALLOY C22

Heat #: 2277-8-3175

Specimen Orientation: _____

_____

Other: _____

Procedure: IQS-WI-821
Project # _____
TOTAL PCS. INSPECTED 7
TOTAL PCS. ACCEPTED 7
TOTAL PCS. REJECTED 0
"NR #" IF REJECTS NA
INSPECTOR _____

LOCATION CC31
J.C. # 77602
EQUIPMENT
MIG
Thd Gage
Cal 30 ½C-3
DATE FEB 28 2003

Darrell S. Dunn 10/15/01
Initiated by. D. Dunn Date

Mark R. Shumaker for 10/15/01
QA Approval B. Mabrito Date

10/15/01
Reviewed by V. Jain Date

Material: Alloy C-22

Sample ID/Heat#: 2277-3-3292

Page numbers: 49 - 52

ENTER FOR NUCLEAR WASTE REGULATORY ANALYSES TECHNICAL OPERATING PROCEDURE	Proc. TOP-012 Revision 2 Change 0 Page 6 of 6

CENTER FOR NUCLEAR WASTE REGULATORY ANALYSES

SAMPLE CUSTODY/CONTROL LOG ENTRY FORM

SAMPLE IDENTIFICATION (Mandatory) ALLOY C-22 2277-3-3292

DESCRIPTION OF SAMPLE (Mandatory) ALLOY C-22 HEAT

2277-3-3292 1" THICK

REFERENCE TOP OR SCIENTIFIC NOTEBOOK ENTRY #607 PAGE 9

ANALYSIS NB 607 P 14

AMOUNT OF SAMPLE 2 PIECES SIZE 24"x24"x1"

DATE OF SAMPLE RECEIPT (Mandatory) 7/29/03

DATE OF INITIAL LOG ENTRY (Mandatory) 8/14/03 BY D. DUNN

DD 5/9/05

SAMPLE STORAGE LOCATION (Mandatory) BLDG ~~51~~/57

COLLECTION SITE (Reference Maps or Field Notes As Required)

PURCHASED FROM HAYNES INTERNATIONAL

PO 383908S

PERSON(S) WHO COLLECTED SAMPLE(S) D. DUNN

SUPPLIER HAYNES INTERNATIONAL

OTHER CONFIRMATORY ANALYSIS BY STANLEY

SERVICES JOB 8/8 #V19 8/14/03

CNWRA FORM TOP-004

Attachment A

Specimen Machining Documentation Form

Purchase/Work Order Number			
Material Identification		Hiloy 22	
Material Heat Number		2277-3-3292	
CNWRA Requestor		Xihua He	
Vendor		Texas Toolmakers	
Specimen Description (CNWRA Drawing Number, ASTM Standard)		20-06002-01-081-001 Rev 2	
To be Completed Prior to Order		To be Completed upon Receipt of Order	
Date	5/5/06	Date	5/17/06
Material Supplied to Vendor (Y/N)	Y	Remaining Stock Material Returned From Vendor (Y/N)	Y
Material Marked with Heat Number and Rolling Direction (Y/N)	Y	Remaining Stock Material Marked with Heat Number and Rolling Direction (Y/N)	Y
Dimensions of Material stock provided (L x W x H)	24"x17.5"x1"	Remaining Stock Material Dimensions (L x W x H)	4" x 24" x 1
Specimen Quantity Ordered	4	Specimen Quantity Received	4
Dimensional Inspection Required (Y/N)	Y	Dimensional Inspection Provided (Y/N)	Y
Marked Containment Provided (Y/N)	Y	Marked Containment Used (Y/N)	Y
Documented in Scientific Notebook Number/Page Number			
NCR Number (if applicable)			

Signature 5/17/06 Date

CNWRA Drawing 20-06002-01-081-001 Rev 2 by Darrell S. Dunn

Material: Alloy 22
Heat: 2277-3-3292

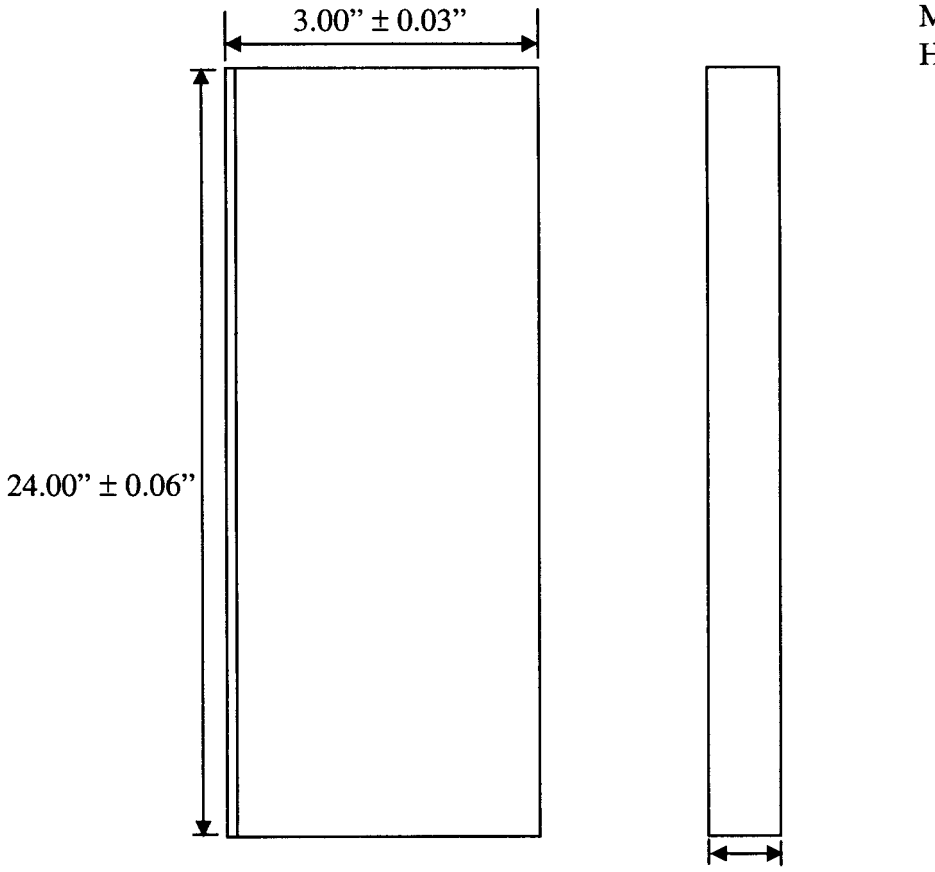

Detail A

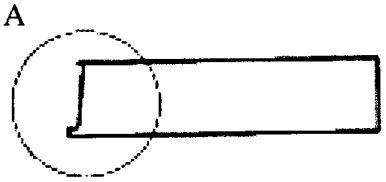

Detail A

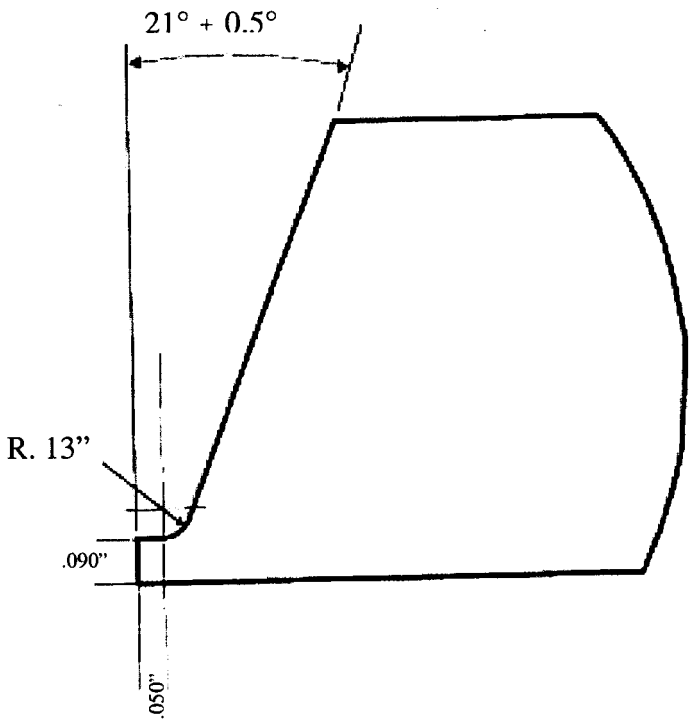

Material: Alloy C-22

Sample ID/Heat#:
2277-3-3266

Page numbers: 53 - 121

ENTER FOR NUCLEAR WASTE REGULATORY ANALYSES TECHNICAL OPERATING PROCEDURE	Proc. TOP-012 Revision 2 Change 0 Page 6 of 6

CENTER FOR NUCLEAR WASTE REGULATORY ANALYSES

SAMPLE CUSTODY/CONTROL LOG ENTRY FORM

SAMPLE IDENTIFICATION (Mandatory) ALLOY C-22 2277-3-3266

DESCRIPTION OF SAMPLE (Mandatory) ALLOY C-22 NEAT

2277-3-3266 0.5" THICK

REFERENCE TOP OR SCIENTIFIC NOTEBOOK ENTRY #607 PAGE 9

ANALYSIS NOTEBOOK 607 P 13

AMOUNT OF SAMPLE 3 PLATES SIZE (2) 24x48x0.5 (1) 24x6x0.5

DATE OF SAMPLE RECEIPT (Mandatory) 7/29/03

DATE OF INITIAL LOG ENTRY (Mandatory) 8/14/03 BY D. DUNN

SAMPLE STORAGE LOCATION (Mandatory) BLDG 57

COLLECTION SITE (Reference Maps or Field Notes As Required)

PURCHASED FROM HAYNES INTERNATIONAL

P.O. 3839085

PERSON(S) WHO COLLECTED SAMPLE(S) D. DUNN

SUPPLIER HAYNES INTERNATIONAL

OTHER ANALYSIS BY STAVELEY SERVICES

JOB 8/8 # V20 8/14/03

CNWRA FORM TOP-004

Attachment A

78668

55

Darrell S. Dunn
SwRI-CNWRA
Phone: (210) 522-6090
Fax: (210) 522-5184

N.T.C

92 R-13

Cylindrical Test Specimen

CNWRA Drawing 20.01402.571.019

#5-40 thread centered minimum 0.250" deep

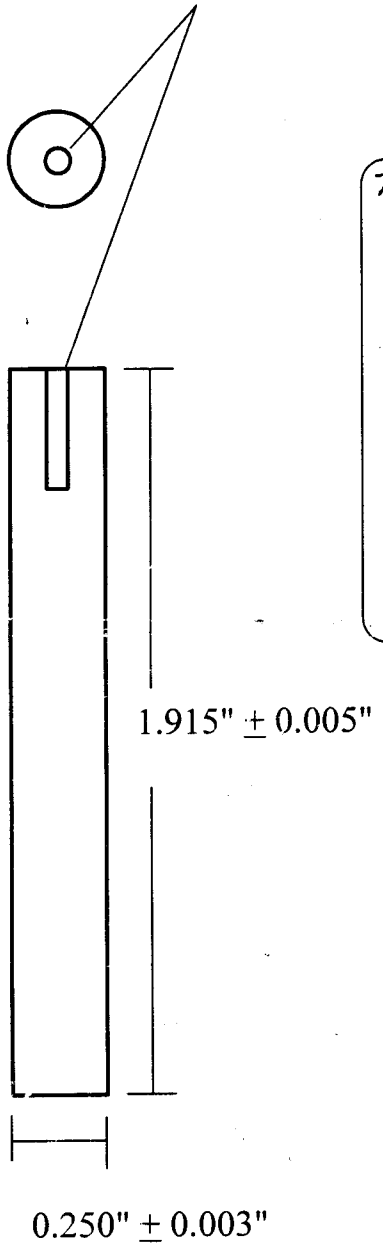

This information is to be completed at time of fabrication

Material: C-22 Alloy

Heat #: 2277-3-3266

Specimen Orientation: Specimens Need To Be perpendicular To Roll

Other: Quanity = 24 Specimens

Darrell S. Dunn 10/15/01
Initiated by. D. Dunn Date

10/15/01
Reviewed by V. Jain Date

Mark R. Shumaker for 10/15/01
QA Approval B. Mabrito Date

6 pcs ok NOV -3 2003
18 pcs ok NOV -6 2003
Cal 30-6C-3
Mic 5056-1

78668

56

Darrell S. Dunn
SwRI-CNWRA
Phone: (210) 522-6090
Fax: (210) 522-5184

N-T-C

92 R-B

Cylindrical Test Specimen

CNWRA Drawing 20.01402.571.019

#5-40 thread centered minimum 0.250" deep

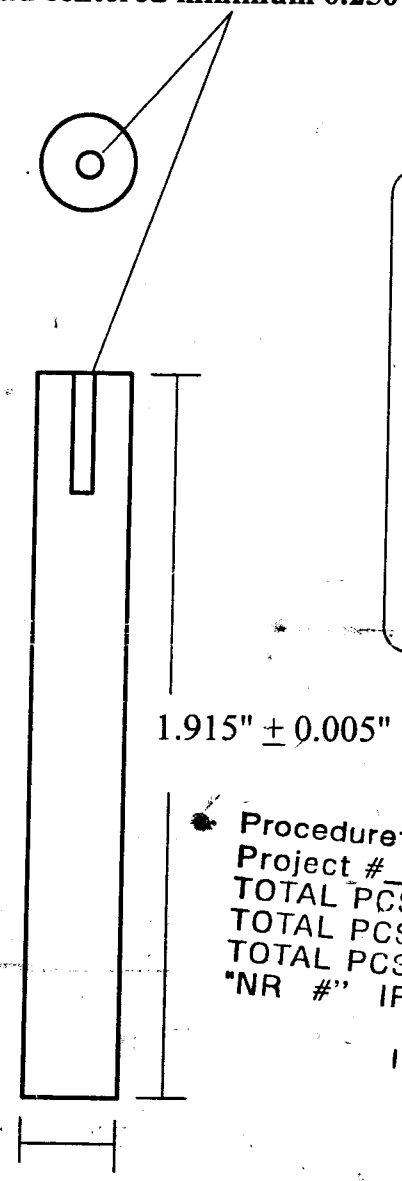

This information is to be completed at time of fabrication

Material: C-22 Alloy

Heat #: 2277-3-3266

Specimen Orientation: Specimens Need To Be perpendicular To Roll

Other: Quanity = 24 Specimens

Procedure: IQS-WI-821
Project #
TOTAL PCS. INSPECTED 6 of 24
TOTAL PCS. ACCEPTED 6
TOTAL PCS. REJECTED 0
"NR #" IF REJECTS NA
INSPECTOR

J.C. # 78668
LOCATION CC3/
EQUIPMENT Mic 2191790 Cal 306C-3 Thd Gage
DATE NOV -3 2003

Darrell S. Dunn 10/15/01
Initiated by. D. Dunn Date

Mark R. Shumaker for 10/15/01
QA Approval B. Mabrito Date

10/15/01
Reviewed by V. Jain Date

Specimen Machining Documentation Form

Purchase/Work Order Number	JC # 81542
Material Identification Alloy 22	
Material Heat Number 2277-3-3266	
CNWRA Requestor Xihua He	
Vendor SwRI machine shop	
Specimen Description (CNWRA Drawing Number, ASTM Standard) 20.01402.571.019	

To be Completed Prior to Order		To be Completed upon Receipt of Order	
Date	6/6/2005	**Date**	6/27/05
Material Supplied to Vendor (Y/N)	Y	**Remaining Stock Material Returned From Vendor (Y/N)**	Y
Material Marked with Heat Number and Rolling Direction (Y/N)	Y	**Remaining Stock Material Marked with Heat Number and Rolling Direction (Y/N)**	Y
Dimensions of Material stock provided (L x W x H)	19" x 8.3" x 0.5"	**Remaining Stock Material Dimensions (L x W x H)**	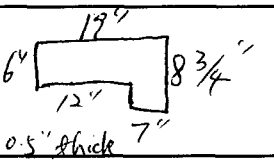
Specimen Quantity Ordered	20	**Specimen Quantity Received**	20
Dimensional Inspection Required (Y/N)	Y	**Dimensional Inspection Provided (Y/N)**	Y
Marked Containment Provided (Y/N)	Y	**Marked Containment Used (Y/N)**	Y

Documented in Scientific Notebook Number/Page Number 670/115

NCR Number (if applicable)

He Xi 6/28/05

Signature Date

Specimen Machining Documentation Form

Purchase/Work Order Number			
Material Identification Alloy 22			
Material Heat Number 2277-3-3266			
CNWRA Requestor Xihua He			
Vendor SwRI Machine Shop			
Specimen Description (CNWRA Drawing Number, ASTM Standard) 20.06002.01.322.06		Alloy 22 washers	
To be Completed Prior to Order		**To be Completed upon Receipt of Order**	
Date	7/5/2005	**Date**	8/9/05
Material Supplied to Vendor (Y/N)	Y	**Remaining Stock Material Returned From Vendor (Y/N)**	Y
Material Marked with Heat Number and Rolling Direction (Y/N)	Y	**Remaining Stock Material Marked with Heat Number and Rolling Direction (Y/N)**	Y
Dimensions of Material stock provided (L x W x H)	19" 6" 8 3/4" 12" 7" 0.5" thick	**Remaining Stock Material Dimensions (L x W x H)**	10.3" 6" 9" 9" 1.3" 0.5" thick
Specimen Quantity Ordered	12	**Specimen Quantity Received**	4 received 7/15/05 8 received 8/9/05
Dimensional Inspection Required (Y/N)	Y	**Dimensional Inspection Provided (Y/N)**	Y
Marked Containment Provided (Y/N)	Y	**Marked Containment Used (Y/N)**	Y
Documented in Scientific Notebook Number/Page Number 729/10			
NCR Number (if applicable)			

He Xihua 8/9/05

Signature Date

59

Xihua He
CNWRA-SwRI
Phone: 210-522-5194
Fax: 210-522-6081
e-mail: xhe@swri.org

SwRI drawing #
20.06002.01.322.006

X 12

Serrated Alloy 22 crevice washer with 24 plateaus

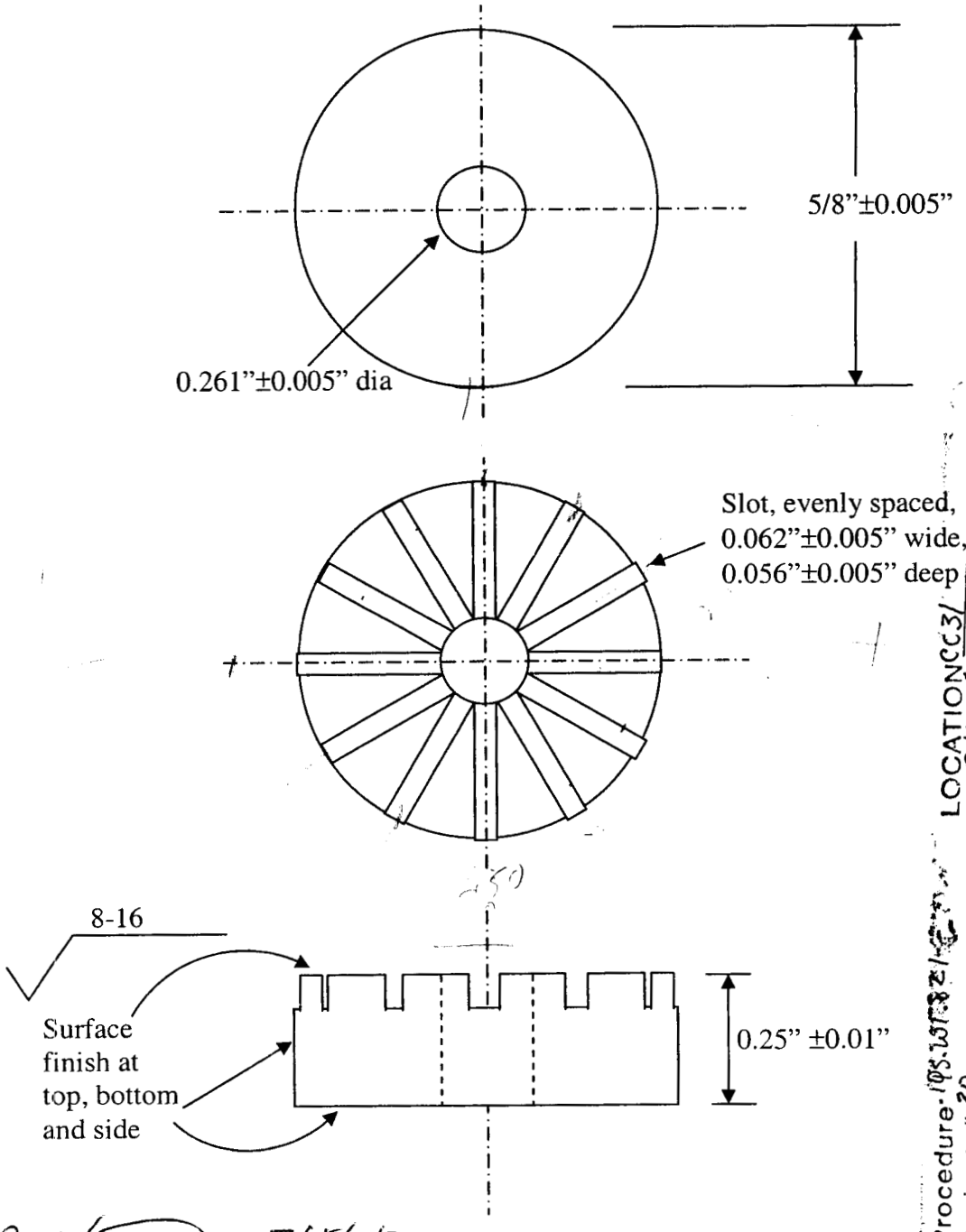

Procedure: 105.137.821
Project #20.
TOTAL PCS. INSPECTED 8
TOTAL PCS. ACCEPTED 8
TOTAL PCS. REJECTED 0
"NR #" IF REJECTS NA
INSPECTOR SwRI 24 QA
LOCATION CC31
J.C. # 81667
EQUIPMENT CMM 006149 Due 1-16-06
DATE AUG -9 2005
Alloy 22 Heat #2277-3-3266

7/5/05
Initiated by: X. He Date

7/5/05
Reviewed by: V. Jain Date

7/5/05
QA approval: B. Brient Date

Specimen Machining Documentation Form

Purchase/Work Order Number			
Material Identification Alloy 22			
Material Heat Number 2277-3-3266			
CNWRA Requestor Xihua He			
Vendor SwRI machine shop			
Specimen Description (CNWRA Drawing Number, ASTM Standard) 20.06002.01.322.007		Alloy 22 Bolts and Nuts	
To be Completed Prior to Order		**To be Completed upon Receipt of Order**	
Date	7/5/2005	**Date**	7/15/2005
Material Supplied to Vendor (Y/N)	Y	**Remaining Stock Material Returned From Vendor (Y/N)**	~~Y~~ ~~plate stayed with vendor for others~~ X.H 7/15/05
Material Marked with Heat Number and Rolling Direction (Y/N)	Y	**Remaining Stock Material Marked with Heat Number and Rolling Direction (Y/N)**	Y
Dimensions of Material stock provided (L x W x H)	19" 6" 12" 8 3/4" 7" 0.5" thick	**Remaining Stock Material Dimensions (L x W x H)**	0.3" 6" 9" 9" 0.5" thick 1.3"
Specimen Quantity Ordered	3	**Specimen Quantity Received**	3
Dimensional Inspection Required (Y/N)	Y	**Dimensional Inspection Provided (Y/N)**	Y
Marked Containment Provided (Y/N)	Y	**Marked Containment Used (Y/N)**	Y
Documented in Scientific Notebook Number/Page Number 729/12			
NCR Number (if applicable)			

Signature 7/15/2005 Date

61

Xihua He
CNWRA-SwRI
Phone: 210-522-5194
Fax: 210-522-6081
e-mail: xhe@swri.org

SwRI drawing #
20.06002.01.322.007

X3

Bolt for multiple crevice assembly

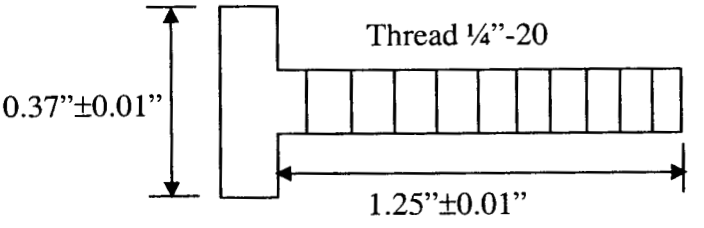

Nut for multiple crevice assembly

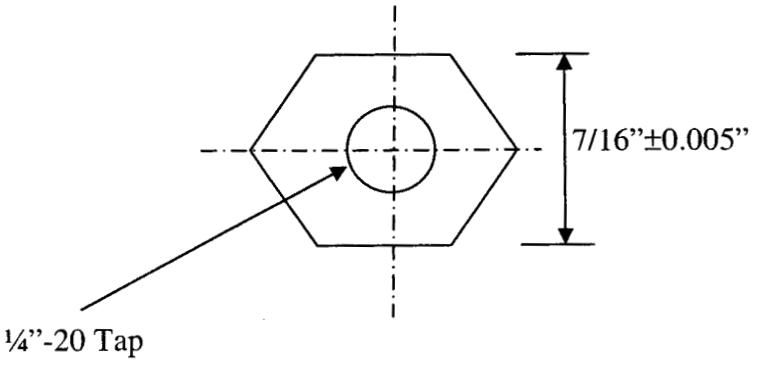

Procedure IDS-W1-821
Project # J.C. #
TOTAL PCS. INSPECTED 1 Each
TOTAL PCS. ACCEPTED 1 Each
TOTAL PCS. REJECTED 0
NR # IF REJECTS NA
INSPECTOR
LOCATION CC31 MS
EQUIPMENT Thd Gage 002176 Due 11-9-07 Calip 00 5081 Due 9-13-05
DATE JUL 26 2005

7/5/05
Initiated by: X. He Date

JUL 26 2005

7/5/2005
Reviewed by: V. Jain Date

7/5/05
QA approval: B. Brient Date

Specimen Machining Documentation Form

Purchase/Work Order Number			
Material Identification		Alloy 22	
Material Heat Number 2277-3-3266			
CNWRA Requestor		XIHUA HE	
Vendor		SwRI Machine Shop	
Specimen Description (CNWRA Drawing Number, ASTM Standard)		CNWRA drawing ~~no~~ 20.06002.01.322.008-A Alloy 22 washer with flange	
To be Completed Prior to Order		**To be Completed upon Receipt of Order**	
Date	7/11/05	**Date**	7/29/05
Material Supplied to Vendor (Y/N)	Y	**Remaining Stock Material Returned From Vendor (Y/N)**	Y
Material Marked with Heat Number and Rolling Direction (Y/N)	Y	**Remaining Stock Material Marked with Heat Number and Rolling Direction (Y/N)**	Y
Dimensions of Material stock provided (L x W x H)	6" 19" 12" 8 3/4" 0.5" thick	**Remaining Stock Material Dimensions (L x W x H)**	6" 10.3" 9" 9" 0.5" thick 1.3"
Specimen Quantity Ordered	~~4~~ 6 x4 7/29/05	**Specimen Quantity Received**	6
Dimensional Inspection Required (Y/N)	Y	**Dimensional Inspection Provided (Y/N)**	Y
Marked Containment Provided (Y/N)	Y	**Marked Containment Used (Y/N)**	Y
Documented in Scientific Notebook Number/Page Number 729/11			
NCR Number (if applicable)			

Signature: [illegible] Date: 7/29/05

63

Xihua He CNWRA-SwRI Phone: 210-522-5194 Fax: 210-522-6081 e-mail: xhe@swri.org	CNWRA drawing # 20.06002.01.322.008.A (first revision of CNWRA drawing # 20.06002.01.322.008)	To be completed at time of order Material: Alloy-22 Heat: 2277-3-3266 Specimen orientation: Other:

Serrated crevice washer with 24 plateaus

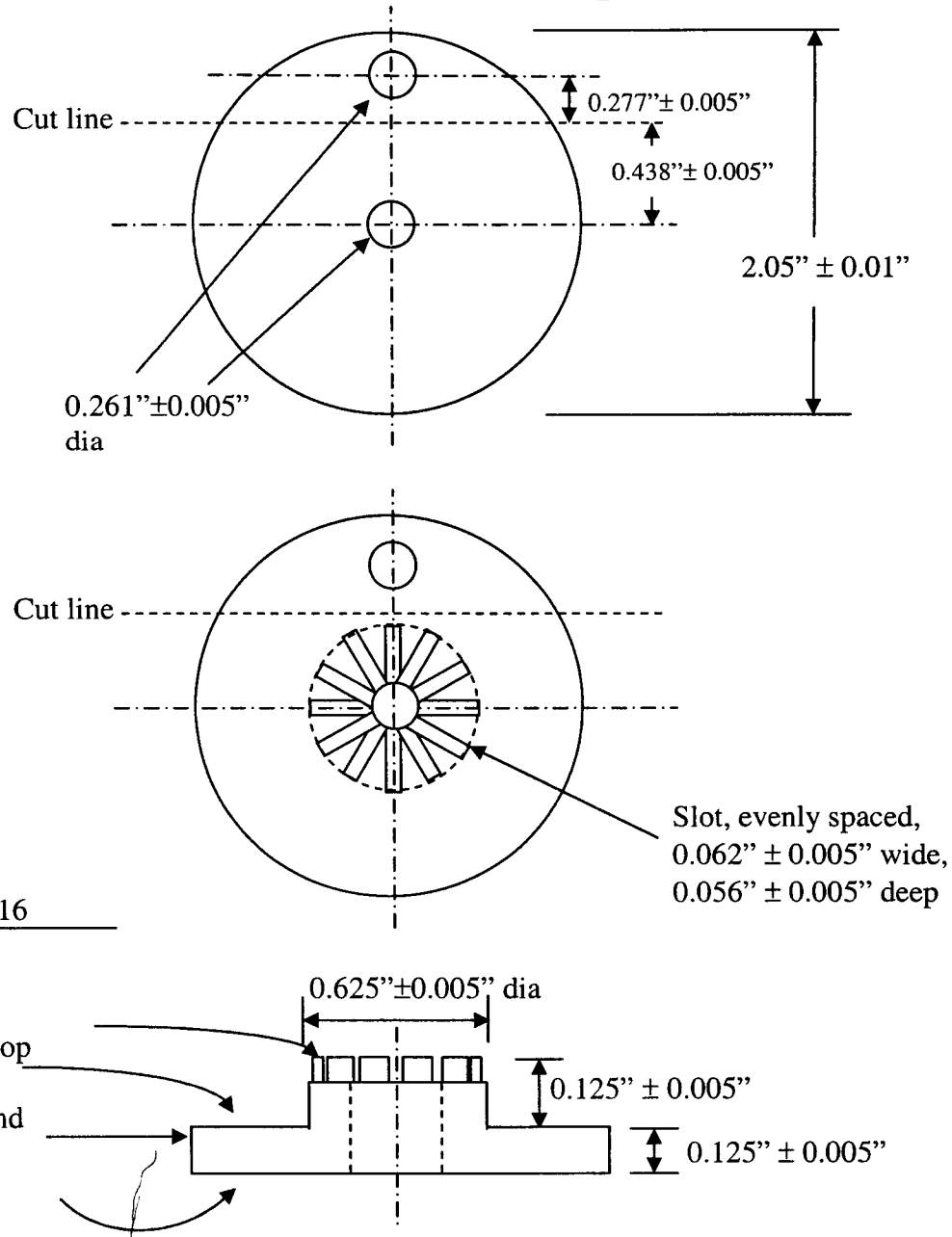

Procedure IDS-WI-821
Project #
TOTAL PCS. INSPECTED 1
TOTAL PCS. ACCEPTED 10
TOTAL PCS. REJECTED
"NR #" IF REJECTS NA
INSPECTOR
LOCATION Ce 31
J.C. #
EQUIPMENT
DATE JUL 26 2005

7/28/05
Initiated by: X. He Date

7/29/05
Reviewed by: V. Jain Date

7/29/05
QA approval: B. Brient Date

JUL 26 2005

Project # 1.20.06002.01.322

64

Darrell S. Dunn
SwRI-CNWRA
Phone: (210) 522-6090
Fax: (210) 522-5184

Cylindrical Test Specimen

CNWRA Drawing 20.01402.571.019

#5-40 thread centered minimum 0.250" deep

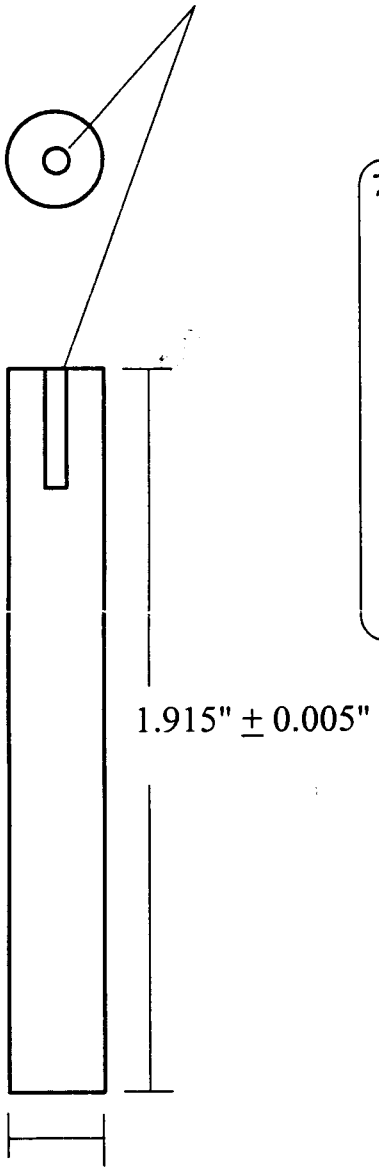

This information is to be completed at time of fabrication.

Material: C-22

Heat #: 2277-3-3266

Specimen Orientation: Perpenticular to rolling direction

Other:

Procedure IQS W1-82/
Project #
TOTAL PCS. INSPECTED 20
TOTAL PCS. ACCEPTED 20
TOTAL PCS. REJECTED 0
"NR #" IF REJECTS NA
INSPECTOR
LOCATION CC 31 MS
J.C. # 81542
EQUIPMENT Cal. 005081 Due 9-13-05 Thd Gage 002176 Due 11-1-07
DATE JUN 27 2005

Darrell S. Dunn 10/15/01
Initiated by. D. Dunn Date

Mark R. Ehnstrom for 10/15/01
QA Approval B. Mabrito Date

10/15/01
Reviewed by V. Jain Date

Specimen Machining Documentation Form

Purchase/Work Order Number		05027848	
Material Identification		Alloy 22	
Material Heat Number		2277-3-3266	
CNWRA Requestor		Xihua He	
Vendor		Texas Toolmakers	
Specimen Description (CNWRA Drawing Number, ASTM Standard)		20-06002-01-322-001	
To be Completed Prior to Order		**To be Completed upon Receipt of Order**	
Date	7/12/2005	**Date**	8/2/05
Material Supplied to Vendor (Y/N)	Y	**Remaining Stock Material Returned From Vendor (Y/N)**	Y
Material Marked with Heat Number and Rolling Direction (Y/N)	Y	**Remaining Stock Material Marked with Heat Number and Rolling Direction (Y/N)**	Y
Dimensions of Material stock provided (L x W x H)	2 ft x 4 ft x 0.5"	**Remaining Stock Material Dimensions (L x W x H)**	3 plates ① ~~2x~~ 2 ft x 2 ft x 0.5" ② 2 ft x 1 ft x 0.5" ③ 2 ft x 1 ft x 0.5"
Specimen Quantity Ordered	20	**Specimen Quantity Received**	10 Received 7/25/05 the other 10 received 8/2/05
Dimensional Inspection Required (Y/N)	Y	**Dimensional Inspection Provided (Y/N)**	Y
Marked Containment Provided (Y/N)	Y	**Marked Containment Used (Y/N)**	Y
Documented in Scientific Notebook Number/Page Number 729/22			
NCR Number (if applicable)			

[signature] 8/2/05

Signature Date

66

11411 East Coker Loop
San Antonio, Texas 78216
Phone: (210) 494-3651
Fax: (210) 494-6139
www.texastoolmakers.com

TEXAS TOOL MAKERS INC.

A8306

ISO 9001:2000

CERTIFICATE OF CONFORMANCE

TO: Southwest Research Institute
6220 Culebra Road
San Antonio, Tx. 78238-5166

CUSTOMER P.O. 544455G

TTI JOB #: 37071

DESCRIPTION 10 EA P/N 20-06002-01-322-002 CREVICE CORROSION SPECIMEN C-22

WE CERTIFY THAT THE ITEM(S) ON THE ABOVE REFERENCED PURCHASE ORDER HAVE BEEN PROCESSED AND/OR MANUFACTURED IN ACCORDANCE WITH:

Drawing

RECORDS ARE ON FILE AT THIS FACILITY, WHICH VERIFY OUR PROCESS CONTROLS, AND AVAILABLE FOR REVIEW UPON REQUEST. TEST RESULTS ARE AS FOLLOWS:

Accepted

TEXAS TOOLMAKERS,

BY : (Steven Espinoza)

TITLE: Q.C. Inspector

DATE : 8/2/05

DIMENSIONAL INSPECTION REPORT

TEXAS TOOLMAKERS, INC.

Job No.:	Part No.:	Rev. No.:	P.O. No.:
37071/3	20-06002-01-322-002	-	544455G

Customer:	Part Name:	Log No.:
SWRI	Crevice Corrosion Specimen C-22	519300 2CD

Inspection Plan:	Quantity:	Sample Size:	Accept No.:	Reject No.:	NR No.:
☐ 100 % ☑ Specified Dim. ☐ 1st Article	10	10	10	~~0~~	~~0~~

Zone	Dim. / Char.	Tolerance*	Actual	Equipment S/N	Comments
1	.400		.400	III	
2	.250		.250	III	
3	#8-32		#8-32	III gage	
~~3~~ 4	.125 R		.125 R	III	
5	.325 ~~Ø~~		.325	III	
6	.375		.375	III	
7	.750		.750	III	
8	.750		.750	III	
9	1.000		1.000		
10	.200		.200		

* Recorded if not affected by tolerance block.

Sheet 1 of 1

Inspection Performed by: [signature] Date 8/2/05 Customer (as applicable) Date

TTI Form QF-100201 Rev 2

Darrell S. Dunn SwRI-CNWRA Phone: (210) 522-6090 Fax: (210) 522-5184 e-mail: ddunn@swri.org	CNWRA Drawing 20-06002-01-322-002 Dimensional tolerances +/- 0.005"	To be completed at time of order: Material: Alloy 22 Heat: 2277-3-7266 Specimen Orientation: Normal to rolling direction Other:

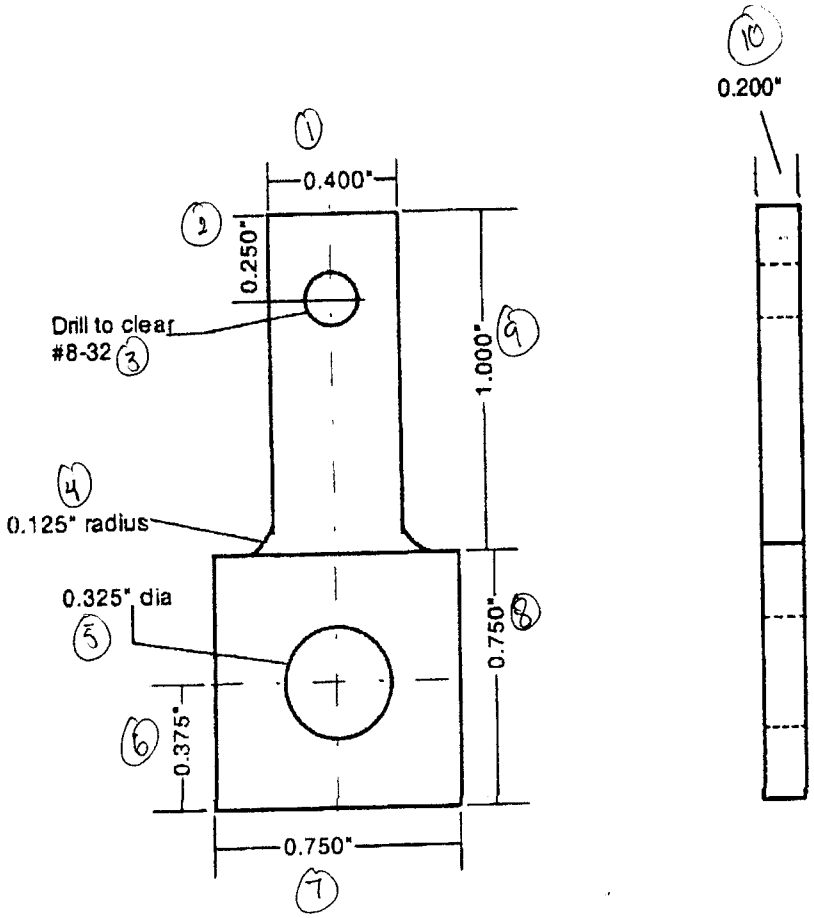

Darrell S. Dunn 3/11/05
Initiated by. D. Dunn Date

3/11/05
Reviewed by V. Jain Date

Mark R. Ehrnstrom 3/11/05
QA Approval B. Brient Date

DIMENSIONAL INSPECTION REPORT

TEXAS TOOLMAKERS, INC.

Job No.:	Part No.:	Rev. No.:	P.O. No.:
37071/3	20-06002-01-322-002		544455G

Customer:	Part Name:	Log No.:
SW.R.I	Crevice Corrosion Specimen C-22	5193002CD

Inspection Plan:	Quantity:	Sample Size:	Accept No.:	Reject No.:	NR No.:
[X] 100 % [ ] Specified Dim. [ ] 1st Article	10	10	10	-0-	-0-

Zone	Dim. / Char.	Tolerance*	Actual	Equipment S/N	Comments
1.	.400		.400	TT-102	
2.	.250		.249	TT-102	
3.	#8-32 clearance		.170	TT-102	
4.	R.125		R.125	TT-024	
5.	ϕ.325		.325	TT-102	
6.	.375		.376	TT-102	
7.	.750		.749	TT-102	
8.	.750		.750	TT-102	
9.	1.000		1.000	TT-102	
10.	.200		.200-.203	TT-102	

* Recorded if not affected by tolerance block.

Sheet 1 of 1

Inspection Performed by: [signature] Date 7-25-05 Customer (as applicable) Date

TTI Form QF-100201 Rev 2

70

Darrell S. Dunn SwRI-CNWRA Phone: (210) 522-6090 Fax: (210) 522-5184 e-mail: ddunn@swri.org	CNWRA Drawing 20-06002-01-322-002 Dimensional tolerances +/- 0.005"	To be completed at time of order: Material: Alloy 22 Heat: 2277-3-3266 Specimen Orientation: Normal to rolling direction Other:

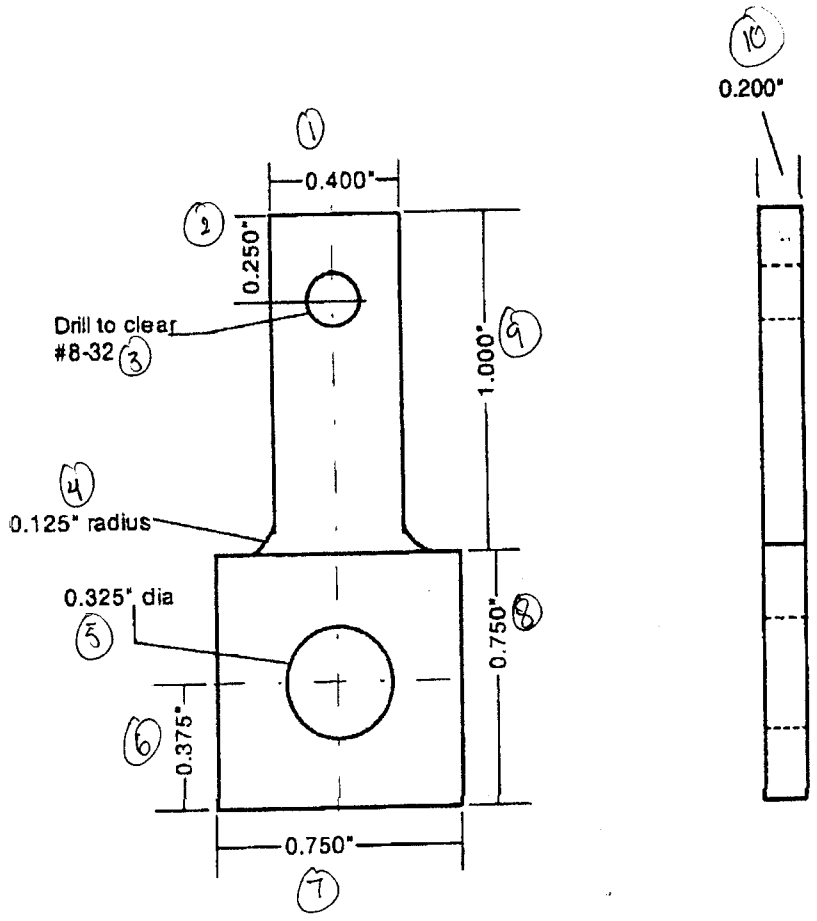

Darrell S. Dunn 3/11/05
Initiated by. D. Dunn Date

3/11/05
Reviewed by V. Jain Date

Mark R. Ehrnstrom for 3/11/05
QA Approval B. Brient Date

71

11411 East Coker Loop
San Antonio, Texas 78216
Phone: (210) 494-3651
Fax: (210) 494-6139
www.texastoolmakers.com

TEXAS TOOL MAKERS INC.

A8306

ISO 9001:2000

CERTIFICATE OF CONFORMANCE

TO: Southwest Research Institute
6220 Culebra Road
San Antonio, Tx. 78238-5166

CUSTOMER P.O. 544455G

TTI JOB #: 37071/3

DESCRIPTION 10 EA.; P/N 20-06002-01-322-002 Crevice Corrosion Specimen C-22

WE CERTIFY THAT THE ITEM(S) ON THE ABOVE REFERENCED PURCHASE ORDER HAVE BEEN PROCESSED AND/OR MANUFACTURED IN ACCORDANCE WITH:

Drawing

RECORDS ARE ON FILE AT THIS FACILITY, WHICH VERIFY OUR PROCESS CONTROLS, AND AVAILABLE FOR REVIEW UPON REQUEST. TEST RESULTS ARE AS FOLLOWS:

Accepted

TEXAS TOOLMAKERS,

BY : Casey Ridgway (Casey Ridgway)

TITLE: Q.A. Manager

DATE : 7/25/05

Specimen Machining Documentation Form

Purchase/Work Order Number			
Material Identification		Alloy 22	
Material Heat Number		2277-3-3266	
CNWRA Requestor		Xihua He	
Vendor		SwRI Machine Shop	
Specimen Description (CNWRA Drawing Number, ASTM Standard)		CNWRA drawing 20.06002.01.322 010 Bolts and Nuts	
To be Completed Prior to Order		**To be Completed upon Receipt of Order**	
Date	8/3/05	**Date**	8/16/05
Material Supplied to Vendor (Y/N)	Y	**Remaining Stock Material Returned From Vendor (Y/N)**	Y
Material Marked with Heat Number and Rolling Direction (Y/N)	Y	**Remaining Stock Material Marked with Heat Number and Rolling Direction (Y/N)**	Y
Dimensions of Material stock provided (L x W x H)	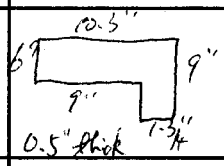	**Remaining Stock Material Dimensions (L x W x H)**	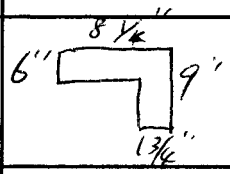
Specimen Quantity Ordered	6	**Specimen Quantity Received**	6
Dimensional Inspection Required (Y/N)	Y	**Dimensional Inspection Provided (Y/N)**	Y
Marked Containment Provided (Y/N)	Y	**Marked Containment Used (Y/N)**	Y
Documented in Scientific Notebook Number/Page Number 729/8			
NCR Number (if applicable)			

He Xi 8/16/05

Signature Date

Xihua He CNWRA-SwRI Phone: 210-522-5194 Fax: 210-522-6081 e-mail: xhe@swri.org	CNWRA drawing # 20.06002.01.322.010	To be completed at time of order Material: Alloy 22 Heat: 2277-3-3266 Specimen orientation: Other:

Bolts and nuts for multiple crevice assembly

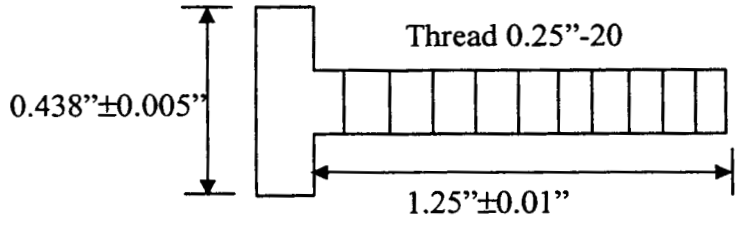

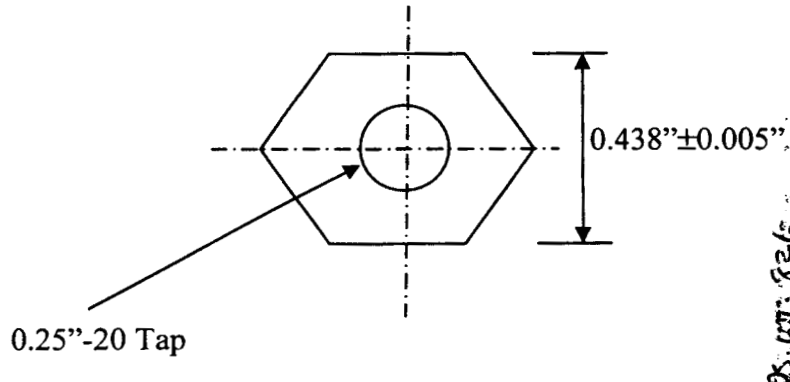

X6

Procedure 1QS-WP-826
Project #
TOTAL PCS. INSPECTED 6 of Each
TOTAL PCS. ACCEPTED 6
TOTAL PCS. REJECTED 0
"NR #" IF REJECTS NA
INSPECTOR SwRI QA
LOCATION CC31 MS
J.C. # 81009
EQUIPMENT Cal 805081 Due 9-13-05
Thd Gage 002176 Due 11-19-07
DATE AUG 16 2005

7/18/05
Initiated by: X. He Date

7/18/05
Reviewed by: V. Jain Date

7/19/05
QA approval: B. Brient Date

Specimen Machining Documentation Form

Purchase/Work Order Number			
Material Identification	Alloy 22	Alloy 22	
Material Heat Number		2277-3-3266	
CNWRA Requestor		PAVAN SHUKLA	
Vendor		SwRI Machine Shop	
Specimen Description (CNWRA Drawing Number, ASTM Standard)		20-03704-042-001	
To be Completed Prior to Order		**To be Completed upon Receipt of Order**	
Date	8/25/05	**Date**	
Material Supplied to Vendor (Y/N)	Y	**Remaining Stock Material Returned From Vendor (Y/N)**	Y
Material Marked with Heat Number and Rolling Direction (Y/N)	Y	**Remaining Stock Material Marked with Heat Number and Rolling Direction (Y/N)**	Y
Dimensions of Material stock provided (L x W x H)	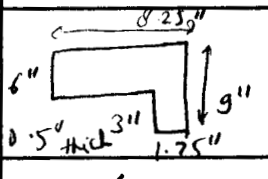	**Remaining Stock Material Dimensions (L x W x H)**	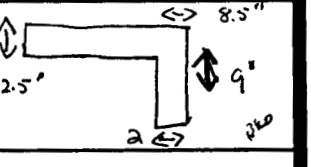
Specimen Quantity Ordered	6	**Specimen Quantity Received**	6
Dimensional Inspection Required (Y/N)		**Dimensional Inspection Provided (Y/N)**	Y
Marked Containment Provided (Y/N)		**Marked Containment Used (Y/N)**	Y
Documented in Scientific Notebook Number/Page Number			
NCR Number (if applicable)			

Signature Date

Ken Chiang
SwRI-CNWRA
Phone: (210) 522-2308
Fax: (210) 522-5184
e-mail: Kchiang@swri.org

3/8 SQ x 6 1/4

SwRI DRAWING # 20-03704-042-001

LTR	DESCRIPTION	DATE	APPROVED

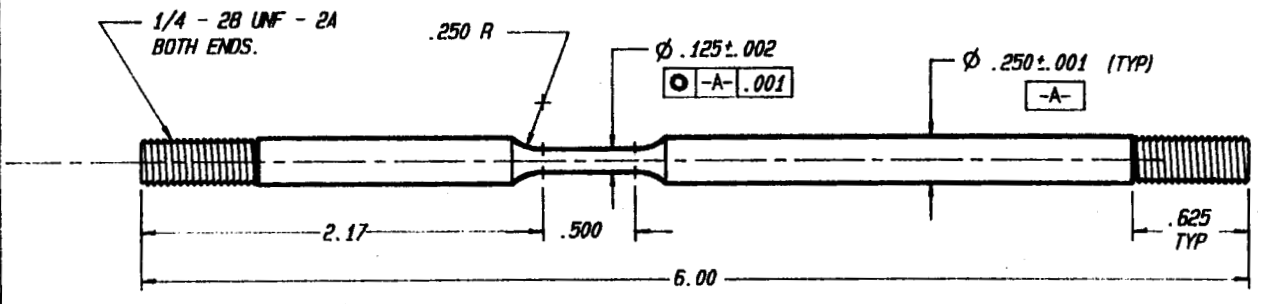

NOTE:
1. DO NOT UNDERCUT RADII
2. USE LOW STRESS MACHINING PROCEDURE

FIND NO.	QTY REQ.	SIZE	CODE IDENT NO.	PART OR IDENTIFYING NO.	NOMENCLATURE OR DESCRIPTION
					PARTS LIST

MATERIAL: 0.5 THICK PLATE SUPPLIED

FINISH: 16 RMS

USED ON

QTY. REQD.

DIMENSIONS	TOLERANCE 6 PLACE	TOLERANCE 3 PLACE	FINISHES	CONTRACT	
				DWN	4-10-1992 A.NAGY
				CKD	
				MECH	
				ELECT	
ANGLES	± 0°30'		± 1°0'		

R. LAW/SWRI-QA

SOUTHWEST RESEARCH INSTITUTE

SLOW STRAIN RATE SPECIMEN

B — DRAWING NO. 20-3704-042-1

SCALE 2 = 1 — SHEET

K.J. Chiang 1-13-04
Initiator: K. Chiang Date

Purnell Dunn for V. Jain
Reviewer: V. Jain Date 1/13/04

Noah R. Shenoison for
QA Approval: R. Brient Date 1/13/04

Procedure IQS-WI-821
Project #
TOTAL PCS. INSPECTED 2
TOTAL PCS. ACCEPTED 2
TOTAL PCS. REJECTED 0
"NR #" IF REJECTS

LOCATION CC 3D MS
J.C. # 81904
EQUIPMENT
Mic. 009976 Due. 1-13-06
Comp. 007158 Due. 1-18-06
Thd Gage 002176 Due. 11-19-07

DATE SEP -6 2005
P.O.# 5285730
Director/DVD

INSPECTOR

C-22 Alloy 11 to Rolling

5

Specimen Machining Documentation Form

Purchase/Work Order Number			
Material Identification		Alloy 22	
Material Heat Number		2277-3-3266	
CNWRA Requestor		LicTai Yang	
Vendor		SWRI Machine shop	
Specimen Description (CNWRA Drawing Number, ASTM Standard)		20-04238-01-002-001 Rev01	
To be Completed Prior to Order		**To be Completed upon Receipt of Order**	
Date	10/25/05	**Date**	
Material Supplied to Vendor (Y/N)	Y	**Remaining Stock Material Returned From Vendor (Y/N)**	Y
Material Marked with Heat Number and Rolling Direction (Y/N)	Y	**Remaining Stock Material Marked with Heat Number and Rolling Direction (Y/N)**	Y
Dimensions of Material stock provided (L x W x H)	~~L = 24" W = 12" H = ½"~~ L = 24" W = 12" H = ½"	**Remaining Stock Material Dimensions (L x W x H)**	Same Ht# 2277-3-3266 Usco Plate that was In Machine shop
Specimen Quantity Ordered	24	**Specimen Quantity Received**	24
Dimensional Inspection Required (Y/N)	Y	**Dimensional Inspection Provided (Y/N)**	Y
Marked Containment Provided (Y/N)	Y	**Marked Containment Used (Y/N)**	Y

Documented in Scientific Notebook Number/Page Number
NB# 737 Pg# 74

NCR Number (if applicable)

Signature

10/24/05
Date

77

Darrell S. Dunn
SwRI-CNWRA
Phone: (210) 522-6090
Fax: (210) 522-5184
e-mail: ddunn@swri.org

Procedure: 1QS-001-821
Project #
TOTAL PCS. INSPECTED 24
TOTAL PCS. ACCEPTED 24
TOTAL PCS. REJECTED 0
"NR #" IF REJECTS NA
INSPECTOR SwRI 24 QA

LOCATION CC 31 MS
J.C. # 82103
EQUIPMENT
Ormic 009976 Due 1-13-06
Cal 005081 Due 9-16-06
DATE NOV 10 2005

SwRI DRAWING # 20-04238-01-002-001 rev 01

Thin Crevice Repassivation Specimen
All Dimensions +/- 0.005"

TCRSPEC
3/16 EM

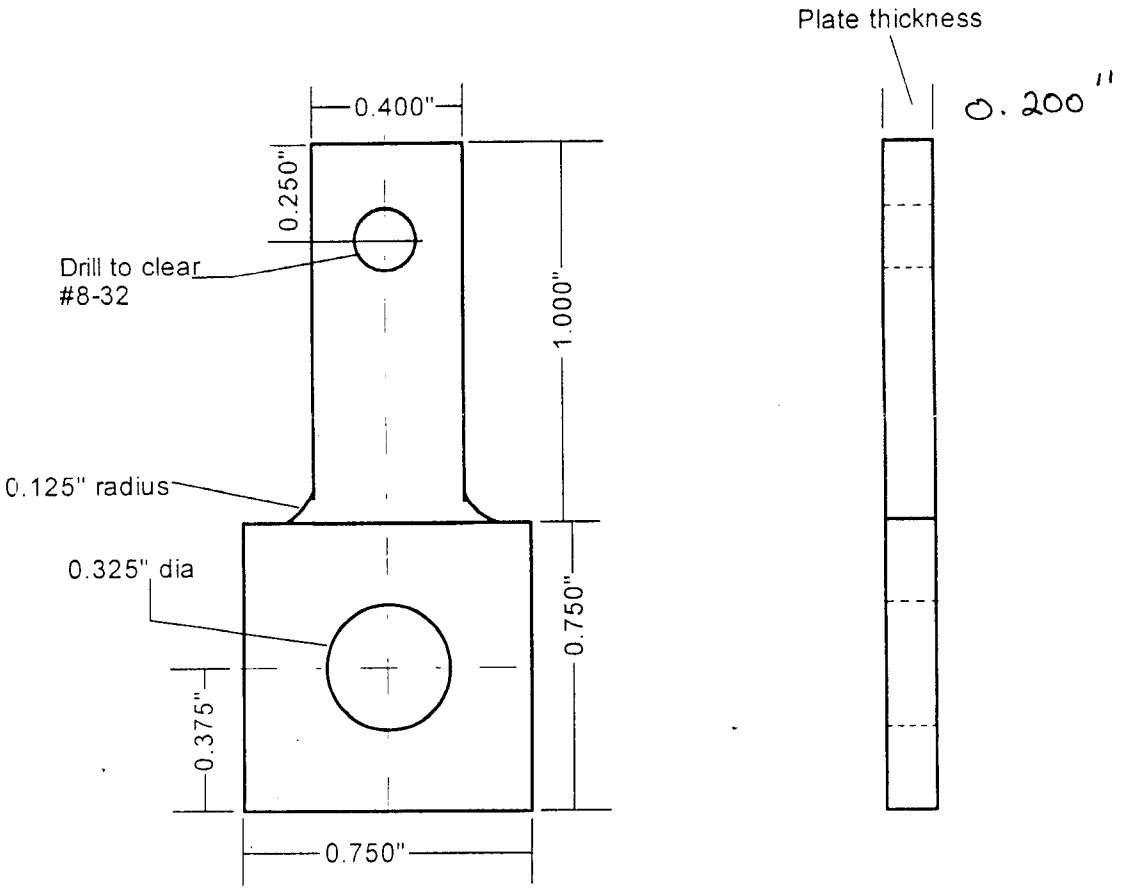

Initiator: D. Dunn Date 6/22/2001

QA Approval: B. Mabrito Date 6/22/2001

Reviewer: N. Sridhar Date 6/23/01

Specimen Machining Documentation Form

Purchase/Work Order Number			
Material Identification		Alloy C22	
Material Heat Number		2277-3-3266	
CNWRA Requestor		Pavan Shukla	
Vendor		Swift machine shop	
Specimen Description (CNWRA Drawing Number, ASTM Standard)		1" x 1.5" Block Specimen	
To be Completed Prior to Order		**To be Completed upon Receipt of Order**	
Date	11/10/05	Date	
Material Supplied to Vendor (Y/N)	Y	Remaining Stock Material Returned From Vendor (Y/N)	Y
Material Marked with Heat Number and Rolling Direction (Y/N)	Y	Remaining Stock Material Marked with Heat Number and Rolling Direction (Y/N)	Y
Dimensions of Material stock provided (L x W x H)	6.5" ↔ ↕ 1.75"	Remaining Stock Material Dimensions (L x W x H)	2" ↕ 1.75
Specimen Quantity Ordered	4	Specimen Quantity Received	Y
Dimensional Inspection Required (Y/N)	Y	Dimensional Inspection Provided (Y/N)	Y
Marked Containment Provided (Y/N)	Y	Marked Containment Used (Y/N)	Y
Documented in Scientific Notebook Number/Page Number NB #715 pg #104			
NCR Number (if applicable)			

Signature 11/10/05 Date

Specimen Machining Documentation Form

Purchase/Work Order Number			
Material Identification		Alloy 22	
Material Heat Number		Heat # 2277-3-3266	
CNWRA Requestor		Xihua He	
Vendor		SwRI Machine Shop	
Specimen Description (CNWRA Drawing Number, ASTM Standard)		20.06002.01.322.016	
To be Completed Prior to Order		**To be Completed upon Receipt of Order**	
Date	1/31/06	Date	
Material Supplied to Vendor (Y/N)	Y	Remaining Stock Material Returned From Vendor (Y/N)	Y
Material Marked with Heat Number and Rolling Direction (Y/N)	Y	Remaining Stock Material Marked with Heat Number and Rolling Direction (Y/N)	Y
Dimensions of Material stock provided (L x W x H)	24"x12"x.05"	Remaining Stock Material Dimensions (L x W x H)	24 x 12 x 0.5 -3 Specimens
Specimen Quantity Ordered	3	Specimen Quantity Received	3
Dimensional Inspection Required (Y/N)	Y	Dimensional Inspection Provided (Y/N)	Y
Marked Containment Provided (Y/N)	Y	Marked Containment Used (Y/N)	Y
Documented in Scientific Notebook Number/Page Number			
NCR Number (if applicable)			

Signature

2/17/06
Date

Darrell S. Dunn
Division 18 Bldg 128
Phone: 6090
Fax: 6965

Drawing 20.06002.01.322.016
Page 1 of 1
Dimensional tolerance +/- 0.010" unless otherwise specified
Material: Specified at time of order

X3

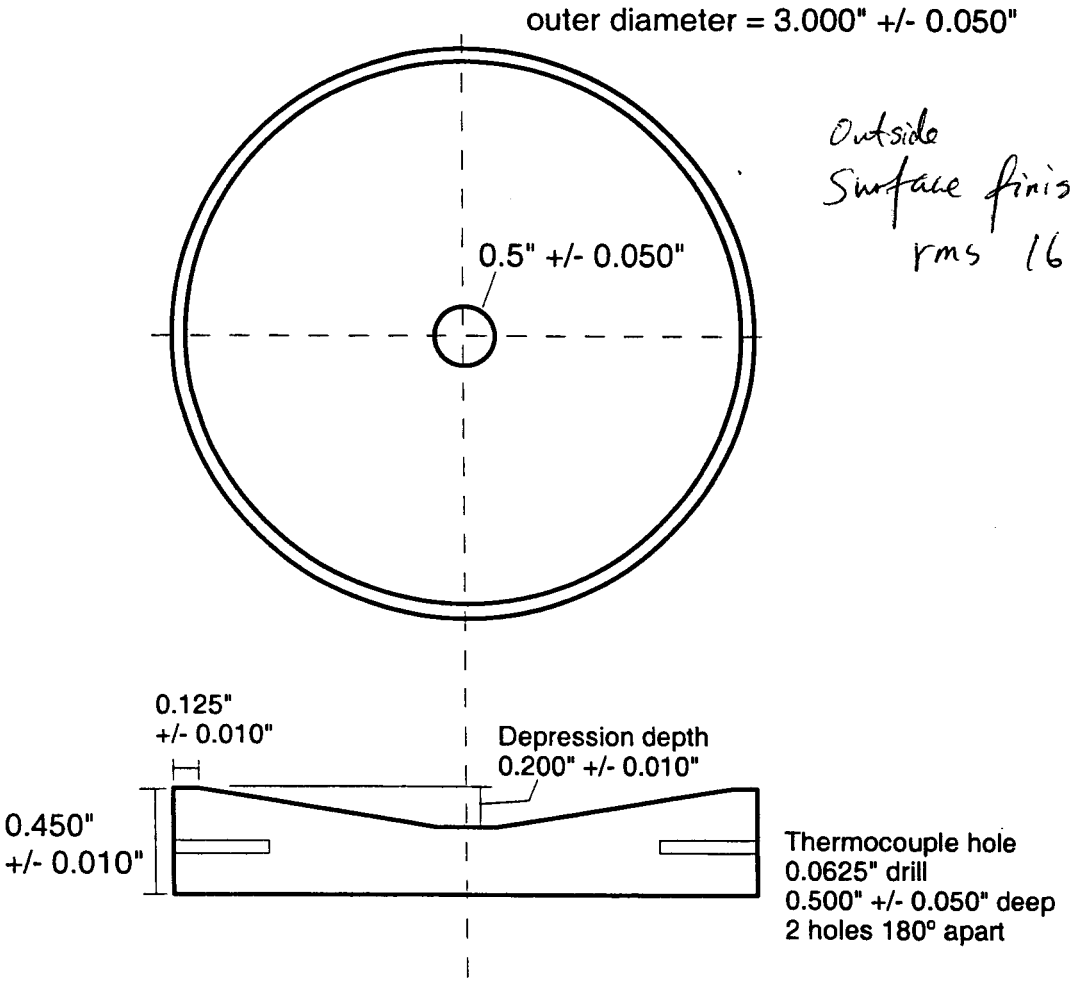

Darrell S. Dunn — 1/23/06 date

Vijay Jain — 1/23/06 date

Bob Brient — 1/24/06 date

81

Darrell S. Dunn
Division 18 Bldg 128
Phone: 6090
Fax: 6965

Drawing 20.06002.01.322.016
Page 1 of 1
Dimensional tolerance +/- 0.010" unless otherwise specified
Material: Specified at time of order

X3

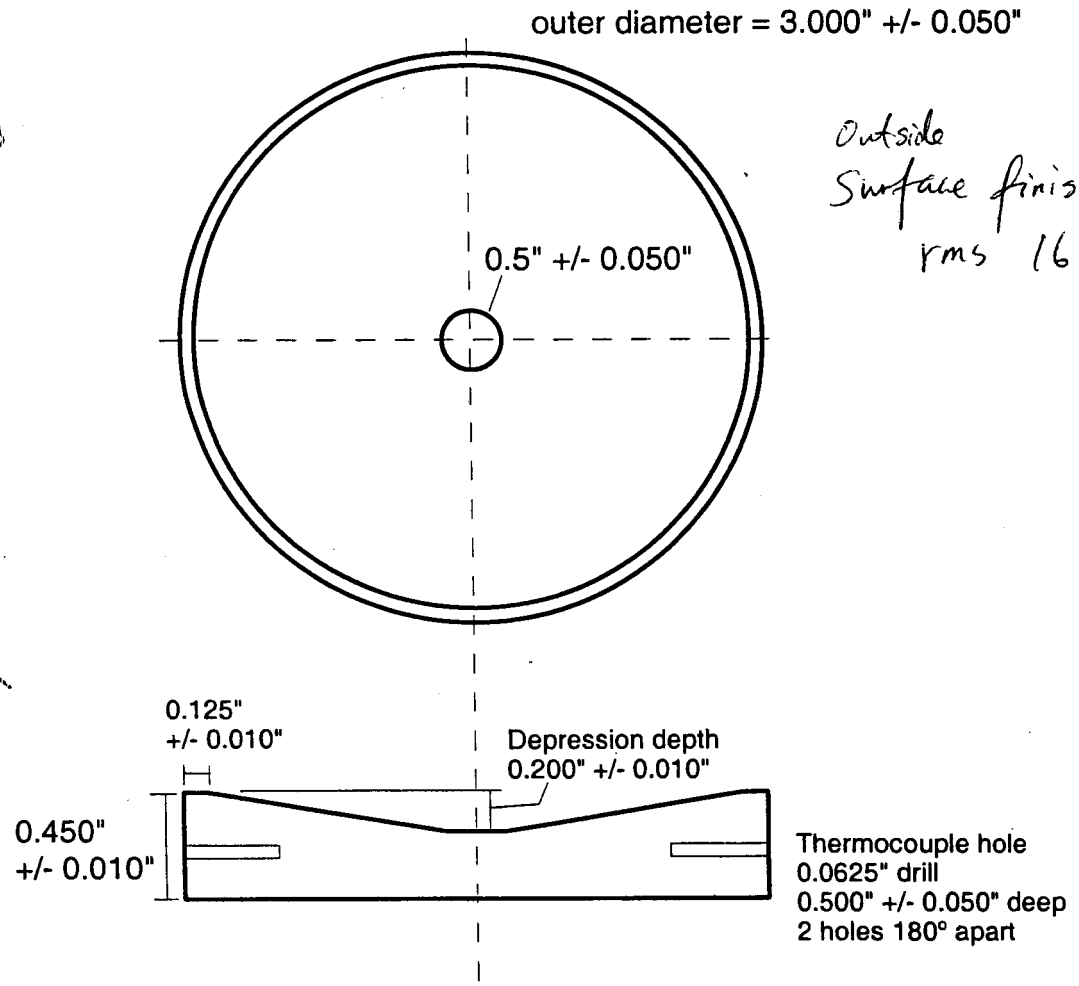

Outside
Surface finish
rms 16

Darrell S. Dunn 1/28/06
Darrell S. Dunn date

Vijay Jain 1/23/06
Vijay Jain date

Bob Brient 1/24/06
Bob Brient date

Specimen Machining Documentation Form

Purchase/Work Order Number		656595 D, Line #2	
Material Identification		Alloy-22 2277-3-3266	
Material Heat Number		2277-3-3266	
CNWRA Requestor		Lietai Yang	
Vendor		Texas Toolmakers	
Specimen Description (CNWRA Drawing Number, ASTM Standard)		Flat specimens Drawing # 20.06002.01.322.19	
To be Completed Prior to Order		**To be Completed upon Receipt of Order**	
Date	2/13/06	**Date**	3/9/06
Material Supplied to Vendor (Y/N)	Y	**Remaining Stock Material Returned From Vendor (Y/N)**	Y
Material Marked with Heat Number and Rolling Direction (Y/N)	Y	**Remaining Stock Material Marked with Heat Number and Rolling Direction (Y/N)**	Y
Dimensions of Material stock provided (L x W x H)	7" x 6" x 0.5" with 10 cut-out holes	**Remaining Stock Material Dimensions (L x W x H)**	7" x 6" x 0.5" 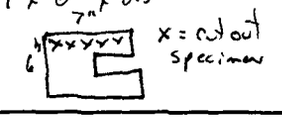
Specimen Quantity Ordered	60	**Specimen Quantity Received**	60
Dimensional Inspection Required (Y/N)	Y	**Dimensional Inspection Provided (Y/N)**	Y
Marked Containment Provided (Y/N)	Y	**Marked Containment Used (Y/N)**	Y
Documented in Scientific Notebook Number/Page Number	No. 737 / p. 62-63, 75-77		
NCR Number (if applicable)	~~No:~~ 2.U. 3/9/06		

Lietai Yang 3/9/06

Signature Date

Lietai Yang
Southwest Research Institute
Building 57
6220 Culebra Rd
San Antonio, TX 78238
210-522-2483
210-522-5184 - fax
E-mail LTyang@swri.org

Flat Specimen

CNWRA Drawing # 20.06002.01.322.19

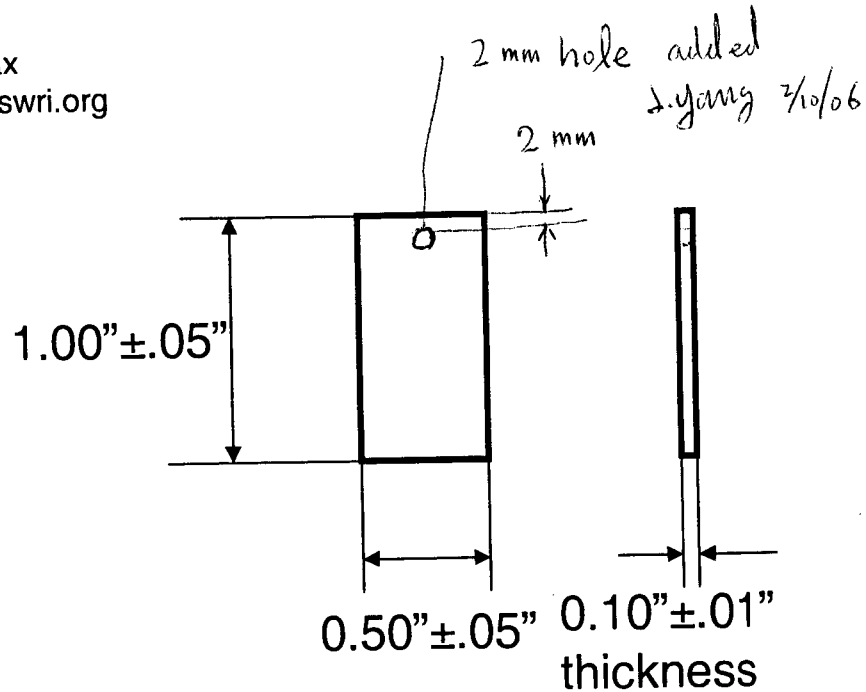

Material: C-22 Alloy
Heat #: 2277-3-3266
Specimen
Orientation: See drawing below
Quantity : 60
Polish: 600 grit
Others: _____

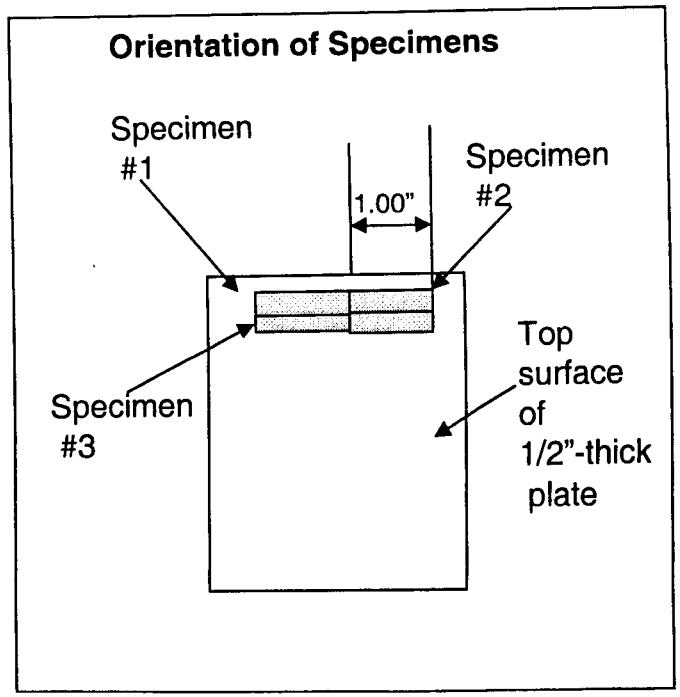

L. Yang 2/7/2006
Initiated by L. Yang Date

2/7/2006
Reviewed by V. Jain Date

2/7/2006
QA Approval by R. Brient Date

Specimen Machining Documentation Form

Purchase/Work Order Number	C
Material Identification	C-22
Material Heat Number	2277-3-3266
CNWRA Requestor	Darrell Dunn
Vendor	SWRI shop. (machine)
Specimen Description (CNWRA Drawing Number, ASTM Standard)	20.06002.01.322.017

To be Completed Prior to Order		To be Completed upon Receipt of Order	
Date	2/16/06	Date	2/27/06
Material Supplied to Vendor (Y/N)	Y	Remaining Stock Material Returned From Vendor (Y/N)	Y
Material Marked with Heat Number and Rolling Direction (Y/N)	Y	Remaining Stock Material Marked with Heat Number and Rolling Direction (Y/N)	Y
Dimensions of Material stock provided (L x W x H)	24" 12"	Remaining Stock Material Dimensions (L x W x H)	24 12"
Specimen Quantity Ordered	1	Specimen Quantity Received	1
Dimensional Inspection Required (Y/N)	Y	Dimensional Inspection Provided (Y/N)	Y
Marked Containment Provided (Y/N)	Y	Marked Containment Used (Y/N)	Y

Documented in Scientific Notebook Number/Page Number

NCR Number (if applicable)

Signature 2/16/06 Date

Darrell S. Dunn
Division 18 Bldg 128
Phone: 6090
Fax: 6965

Drawing 20.06002.01.322.017
Sputter Target
Page 1 of 1
Dimensional tolerance +/- 0.010" unless otherwise specified
Material: Specified at time of order

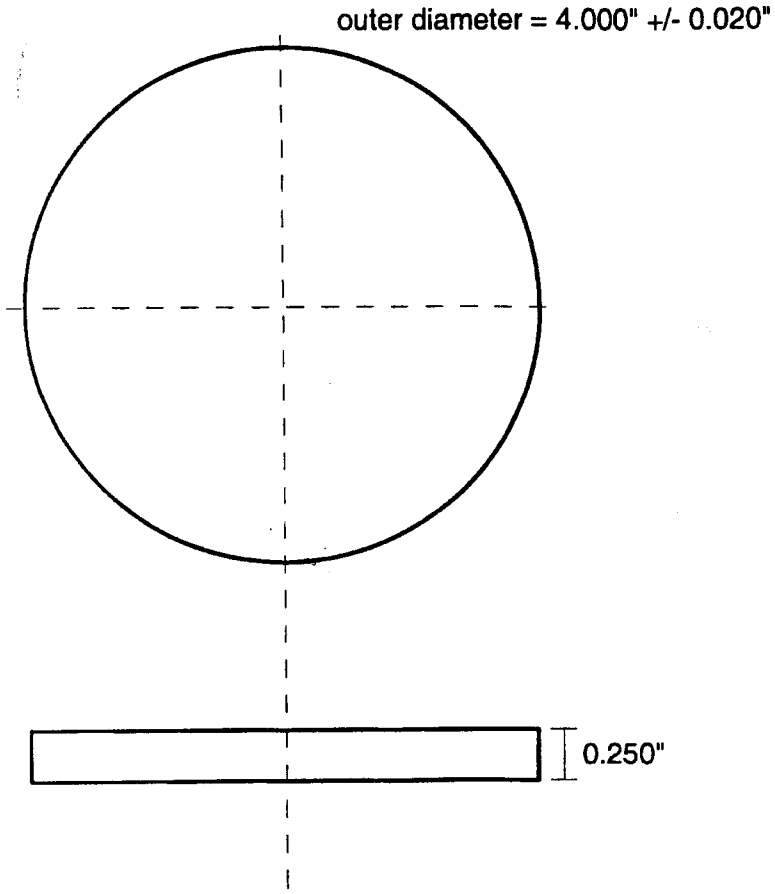

Procedure 105-W1.821
Project #
TOTAL PCS. INSPECTED 5
TOTAL PCS. ACCEPTED 5
TOTAL PCS. REJECTED 0
"NR #" IF REJECTS N/A
INSPECTOR
DATE 2-27-06

LOCATION SC31 MS
J.C. # 82641
EQUIPMENT
Mic 008976 due 1-13-07
Calipers 005081 due 12-14-06

304L HT# T0954
C22 HT# 2277-3-3266
825 HT# H44371 FC
316L HT# P80746
516L HT# 084944

Darrell S. Dunn 2/6/06
Darrell S. Dunn date

Vijay Jain 2/7/06
Vijay Jain date

Bob Brient 2/7/06
Bob Brient date

Darrell S. Dunn
Division 18 Bldg 128
Phone: 6090
Fax: 6965

Drawing 20.06002.01.322.017
Sputter Target
Page 1 of 1
Dimensional tolerance +/- 0.010" unless otherwise specified
Material: Specified at time of order

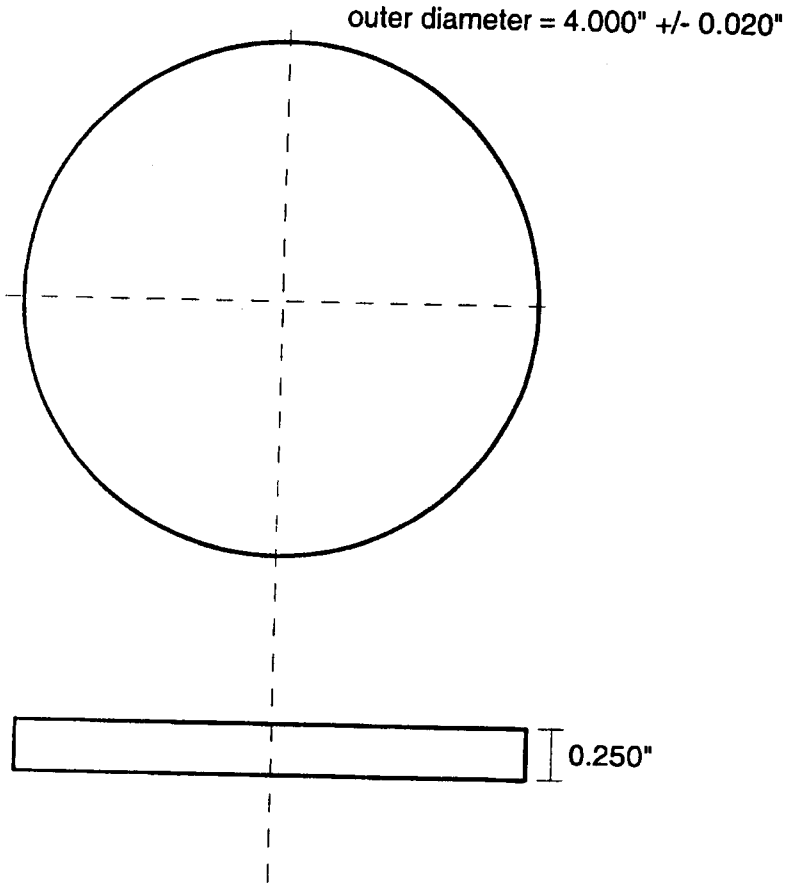

Darrell S. Dunn 2/6/06
Darrell S. Dunn date

2/7/06
Vijay Jain date

2/7/06
Bob Brient date

Specimen Machining Documentation Form

Purchase/Work Order Number			
Material Identification		C22	
Material Heat Number		2277-3-3266	
CNWRA Requestor		Xihua He	
Vendor		Texas Tatimakers	
Specimen Description (CNWRA Drawing Number, ASTM Standard)		20-06002-01-322-002	
To be Completed Prior to Order		**To be Completed upon Receipt of Order**	
Date	5/5/06	Date	5/30/06
Material Supplied to Vendor (Y/N)	Y	Remaining Stock Material Returned From Vendor (Y/N)	Y
Material Marked with Heat Number and Rolling Direction (Y/N)	Y	Remaining Stock Material Marked with Heat Number and Rolling Direction (Y/N)	Y
Dimensions of Material stock provided (L x W x H)	2 ft x 1 ft x 0.5" ~~with 5" cut holes~~	Remaining Stock Material Dimensions (L x W x H)	2 ft x 1 ft x .5" with Hole & EDM Cuts for Specimens
Specimen Quantity Ordered	24	Specimen Quantity Received	24
Dimensional Inspection Required (Y/N)	Y	Dimensional Inspection Provided (Y/N)	Y
Marked Containment Provided (Y/N)	Y	Marked Containment Used (Y/N)	Y
Documented in Scientific Notebook Number/Page Number #796 -			
NCR Number (if applicable) –			

B-K [signature] 5/30/06

Signature Date

Darrell S. Dunn
SwRI-CNWRA
Phone: (210) 522-6090
Fax: (210) 522-5184
e-mail: ddunn@swri.org

CNWRA Drawing 20-06002-01-322-002
Dimensional tolerances +/- 0.005"

To be completed at time of order:
Material: Alloy 22
Heat: 2277-3-3266
Specimen Orientation: Normal to rolling direction
Other:

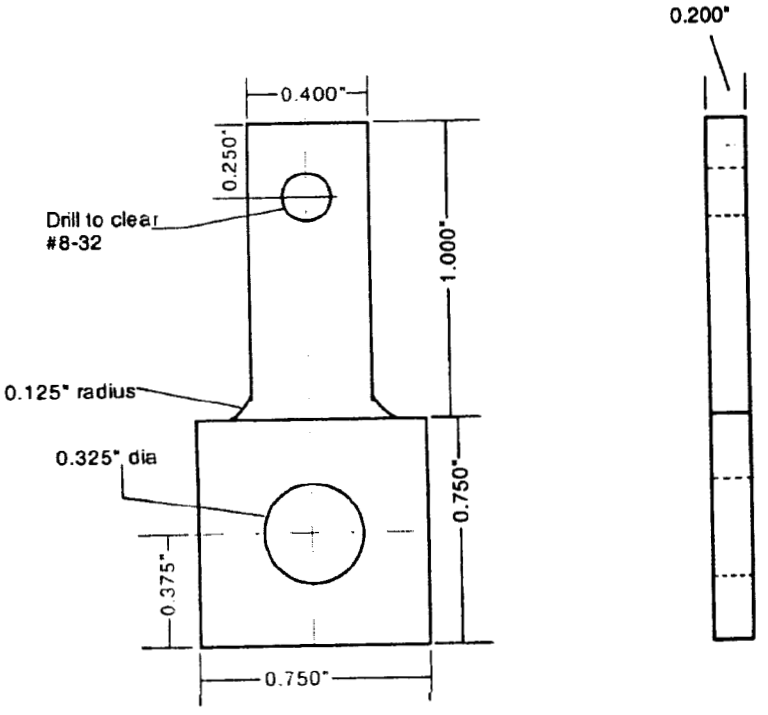

Darrell S. Dunn 3/11/05
Initiated by. D. Dunn Date

3/11/05
Reviewed by V. Jain Date

Mark R. Ehrnstrom 3/11/05
QA Approval B. Brient for Date

89

11411 East Coker Loop
San Antonio, Texas 78216
Phone: (210) 494-3651
Fax: (210) 494-6139
www.texastoolmakers.com

TEXAS TOOL MAKERS INC.

A8306

ISO 9001:2000

CERTIFICATE OF CONFORMANCE

TO: Southwest Research Institute
6220 Culebra Road
San Antonio, Tx. 78238-5166

CUSTOMER P.O. 656855D

TTI JOB #: 38019/2

DESCRIPTION 24 EA.; P/N 20-06002-01-322-002 Alloy 22 Specimen

WE CERTIFY THAT THE ITEM(S) ON THE ABOVE REFERENCED PURCHASE ORDER HAVE BEEN PROCESSED AND/OR MANUFACTURED IN ACCORDANCE WITH:

Drawing 3/11/05

RECORDS ARE ON FILE AT THIS FACILITY, WHICH VERIFY OUR PROCESS CONTROLS, AND AVAILABLE FOR REVIEW UPON REQUEST. TEST RESULTS ARE AS FOLLOWS:

Accepted

TEXAS TOOLMAKERS,

BY : Casey Ridgway (Casey Ridgway)

TITLE: Q.A. Manager

DATE : 5-30-06

DIMENSIONAL INSPECTION REPORT

TEXAS TOOLMAKERS, INC.

Job No.:	Part No.:	Rev. No.:	P.O. No.:
38019/2	20-06002-01-322-002		656855D

Customer:	Part Name:	Log No.:
SW.R.I.	Alloy 22 Specimen	6125001-C A

Inspection Plan:	Quantity:	Sample Size:	Accept No.:	Reject No.:	NR No.:
[X] 100 % [ ] Specified Dim. [ ] 1st Article	24	24	24	0	0

Zone	Dim. / Char.	Tolerance*	Actual	Equipment S/N	Comments
1.	.400		.398-.403	TA-102	
2.	.250		.248-.253	TA-102	
3.	8-32 clear		.169	TA-102	
4.	R.125		R.125	TA-024	
5.	ϕ.325		.324	TA-102	
6.	.375		.373-.377	TA-102	
7.	.750		.748-.749	TA-102	
8.	.750		.747-.750	TA-102	
9.	1.000		1.000-1.004	TA-102	
10.	.200		.200-.203	TA-102	

* Recorded if not affected by tolerance block.

Sheet 1 of 1

Inspection Performed by: Casey Ridgway Date: 5-30-06 Customer (as applicable) Date

TTI Form QF-100201 Rev 2

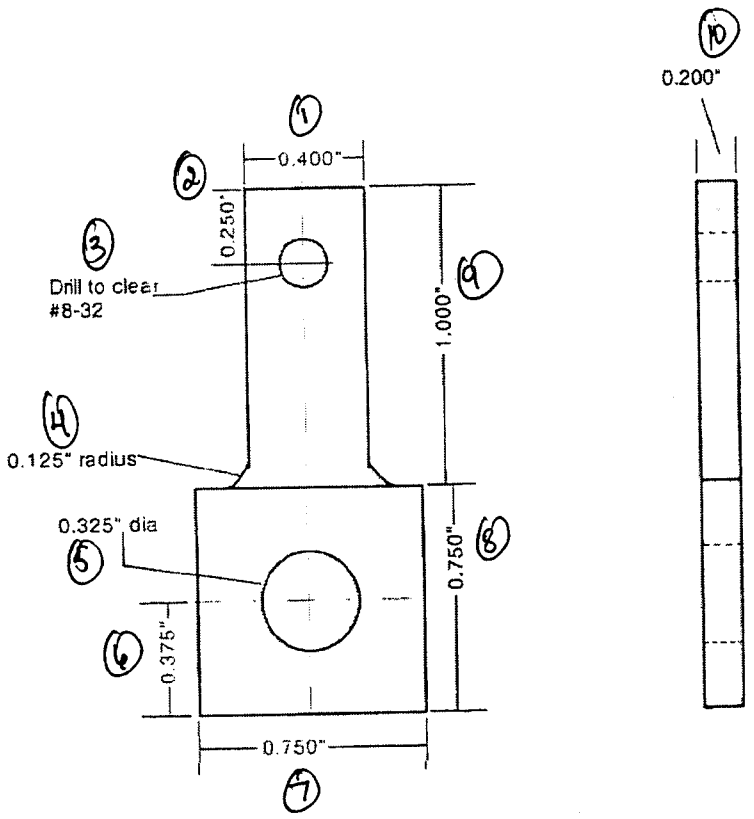

Initiated by. D. Dunn — Date 3/11/05

Reviewed by V. Jain — Date 3/11/05

QA Approval B. Brient — Date 3/11/05

TTI 38019-2

Darrell S. Dunn SwRI-CNWRA Phone: (210) 522-6090 Fax: (210) 522-5184 e-mail: ddunn@swri.org	CNWRA Drawing 20-06002-01-322-002 Dimensional tolerances +/- 0.005"	To be completed at time of order: Material: Alloy 22 Heat: 2277-3-3266 Specimen Orientation: Normal to rolling direction Other:

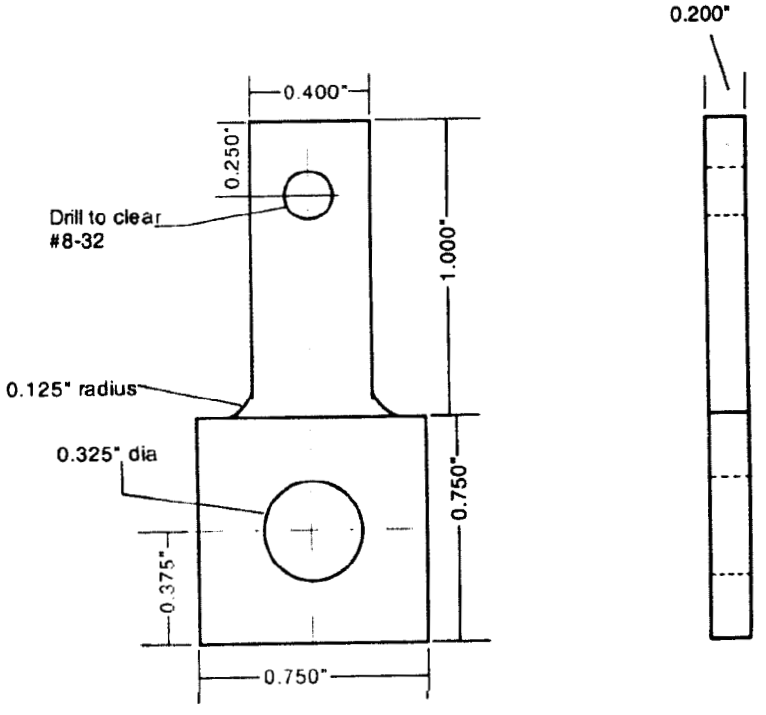

Darrell S. Dunn 3/11/05
Initiated by. D. Dunn Date

3/11/05
Reviewed by V. Jain Date

Mark R. Ehrnstrom 3/11/05
QA Approval B. Brient Date

Specimen Machining Documentation Form

Purchase/Work Order Number			
Material Identification		C-22	
Material Heat Number		2277-3-3266	
CNWRA Requestor		Darrell Dunn	
Vendor		Swai Machine Shop	
Specimen Description (CNWRA Drawing Number, ASTM Standard)		20.06002.01.322.020	
To be Completed Prior to Order		**To be Completed upon Receipt of Order**	
Date	6/7/06	**Date**	
Material Supplied to Vendor (Y/N)	Y	**Remaining Stock Material Returned From Vendor (Y/N)**	Y
Material Marked with Heat Number and Rolling Direction (Y/N)	Y	**Remaining Stock Material Marked with Heat Number and Rolling Direction (Y/N)**	Y
Dimensions of Material stock provided (L x W x H)	specimen cut 6" 7"	**Remaining Stock Material Dimensions (L x W x H)**	3" 7"
Specimen Quantity Ordered	~~8~~ BED 6/7/06 16	**Specimen Quantity Received**	16
Dimensional Inspection Required (Y/N)	Y	**Dimensional Inspection Provided (Y/N)**	Y
Marked Containment Provided (Y/N)	Y	**Marked Containment Used (Y/N)**	Y
Documented in Scientific Notebook Number/Page Number			
NCR Number (if applicable)			

Signature

6/7/06
Date

Darrell S. Dunn
Division 18 Bldg 128
Phone: 6090
Fax: 6965

Flat Metal Sensor Element
Drawing 20.06002.01.322.020
Page 1 of 2
Dimensional tolerance +/- 0.010" unless otherwise specified
Material: Specified at time of order

Specimen Thickness +/- Tolerance: 0.062" +/- 0.003"

MATERIAL	QUANTITY
304L SS	8
A516 STEEL	8

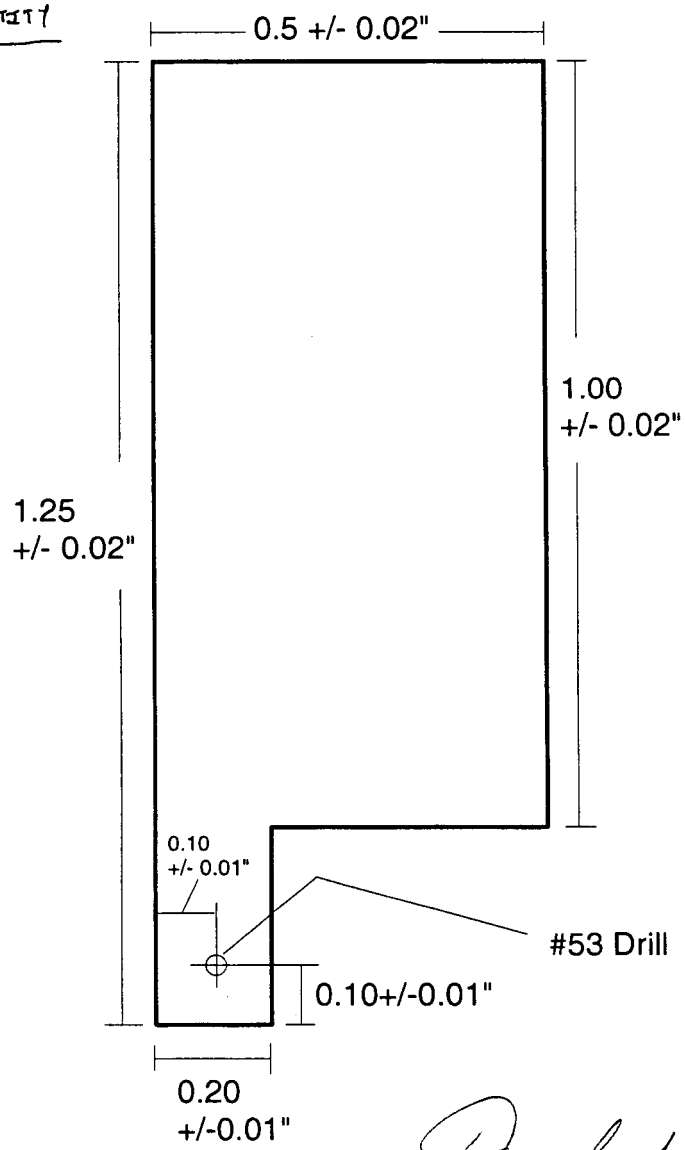

Darrell S. Dunn — 5/30/06
Darrell S. Dunn — date

Vijay Jain — 5/31/06
Vijay Jain — date

Bob Brient — 5/31/06
Bob Brient — date

Darrell S. Dunn
Division 18 Bldg 128
Phone: 6090
Fax: 6965

Flat Metal Sensor Element
Drawing 20.06002.01.322.020
Page 2 of 2
Dimensional tolerance +/- 0.010" unless otherwise specified
Material: Specified at time of order

Specimen Thickness +/- Tolerance: 0.062" +/- 0.003"

MATERIAL	QUANTITY
Alloy 22	16

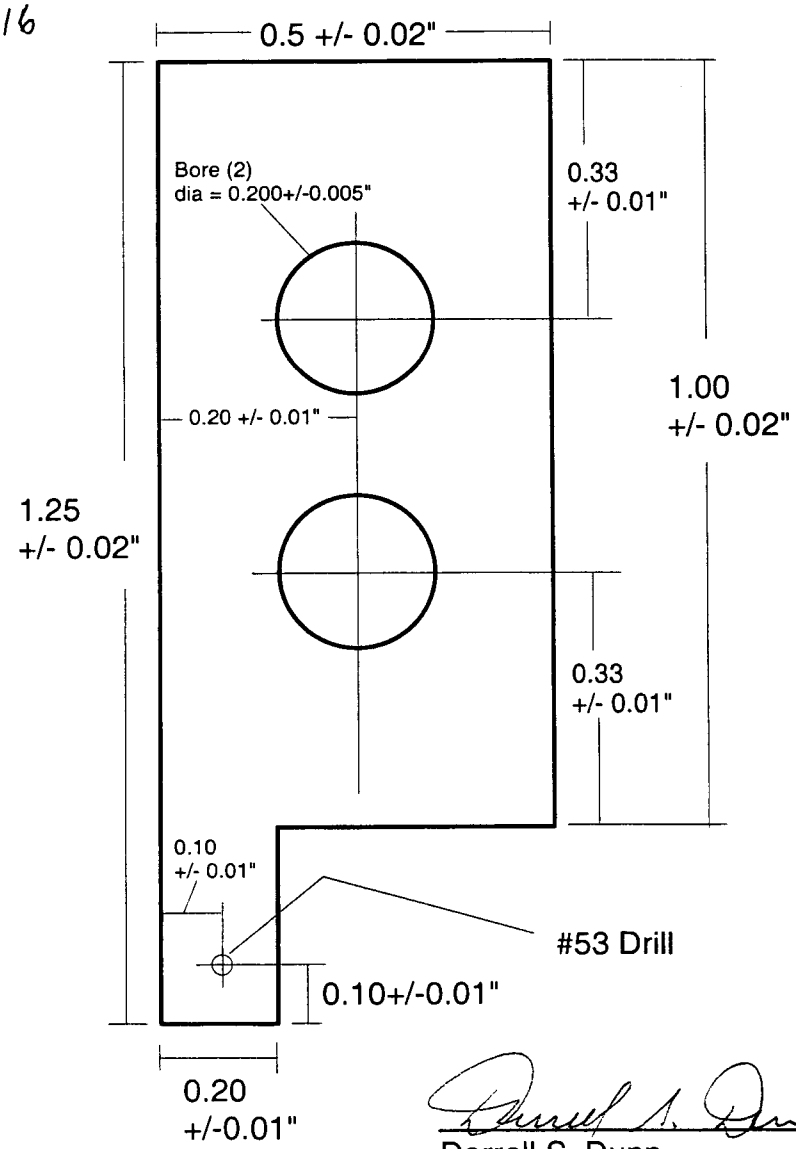

Darrell S. Dunn — 5/30/06
Darrell S. Dunn — date

Vijay Jain — 5/31/06
Vijay Jain — date

Bob Brient — 5/31/06
Bob Brient — date

96

Darrell S. Dunn Division 18 Bldg 128 Phone: 6090 Fax: 6965	Flat Metal Sensor Element Drawing 20.06002.01.322.020 Page 2 of 2 Dimensional tolerance +/- 0.010" inless otherwise specified Material: Specified at time of order

Specimen Thickness +/- Tolerance: 0.062" +/- 0.003"

MATERIAL	QUANTITY
Alloy 22	16

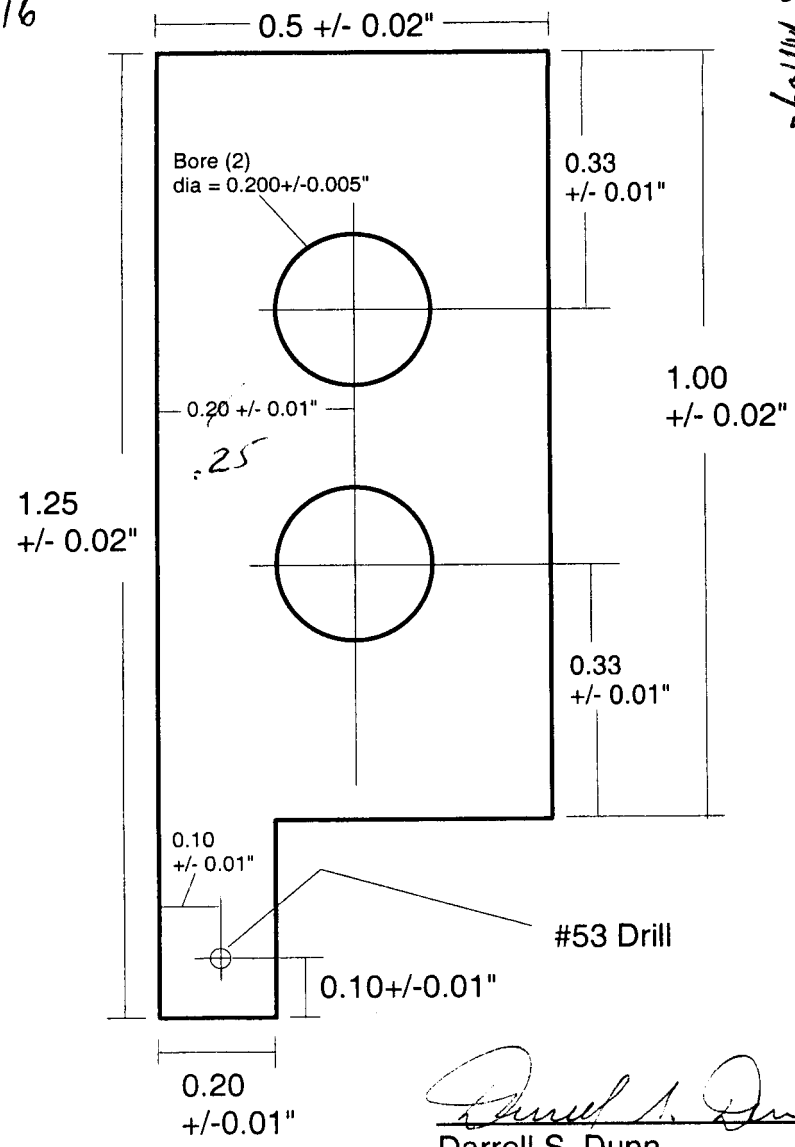

Procedure:
Project #
TOTAL PCS. INSPECTED 38 16 LXS
TOTAL PCS. ACCEPTED 38 16 LXS
TOTAL PCS. REJECTED 0
"NR #" IF REJECTS NA
INSPECTOR SwRI 24 QA
16 pcs Alloy 22
LOCATION J.C. # 83182
EQUIPMENT Cal. 00 5081 Due 12-14-06
DATE 6/26/06

Darrell S. Dunn 5/30/06
Darrell S. Dunn date

Vijay Jain 5/31/06
Vijay Jain date

Bob Brient 5/31/06
Bob Brient date

Darrell S. Dunn
Division 18 Bldg 128
Phone: 6090
Fax: 6965

Flat Metal Sensor Element
Drawing 20.06002.01.322.020
Page 1 of 2
Dimensional tolerance +/- 0.010" unless otherwise specified
Material: Specified at time of order

Specimen Thickness +/- Tolerance: 0.062" +/- 0.003"

MATERIAL	QUANTITY
304L SS	8
A516 STEEL	8

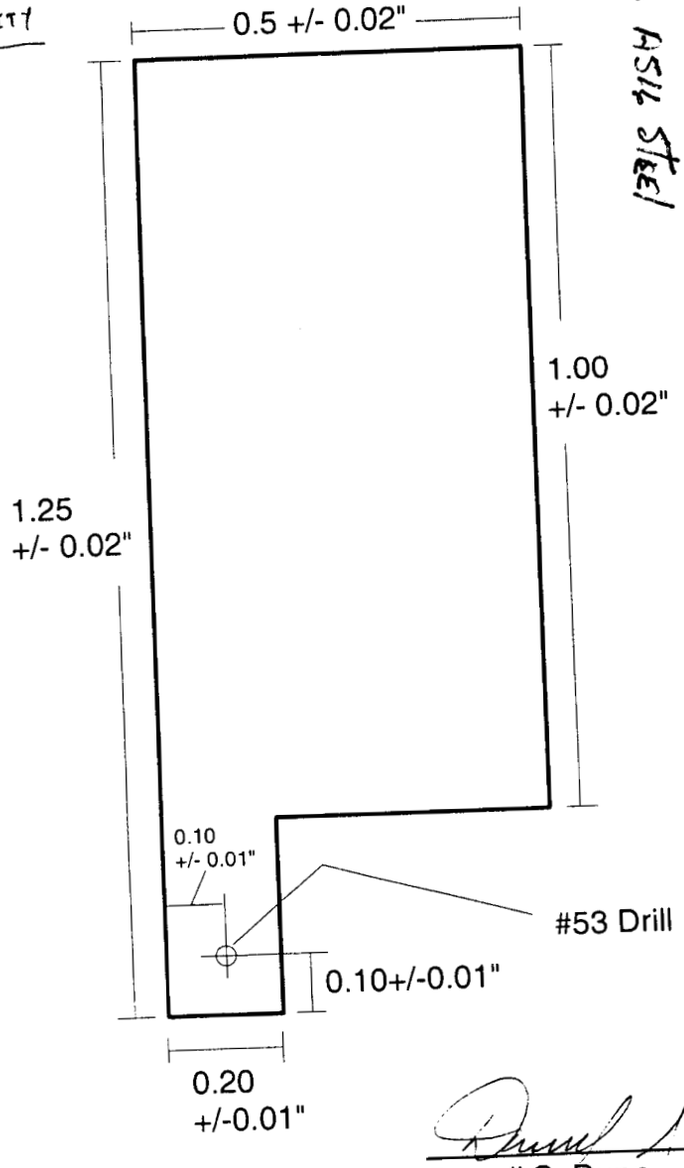

Procedure:
Project # _____ LOCATION _____
TOTAL PCS. INSPECTED 16 J.C. # 83182
TOTAL PCS. ACCEPTED 16 EQUIPMENT
TOTAL PCS. REJECTED 0 Cal 005081 Due 12-14-06
"NR #" IF REJECTS NA
INSPECTOR SwRI 24 QA DATE 6/26/06

8 pcs. 304L SS
8 pcs A516 Steel

Darrell S. Dunn 5/30/06
Darrell S. Dunn date

Vijay Jain 5/31/06
Vijay Jain date

Bob Brient 5/31/06
Bob Brient date

Specimen Machining Documentation Form

Purchase/Work Order Number			
Material Identification		Alloy 22	
Material Heat Number		2277-3-3266	
CNWRA Requestor		Mike Schroer / Ken Chiang	
Vendor		SwRI Machine shop	
Specimen Description (CNWRA Drawing Number, ASTM Standard)		20-R9471-002	
To be Completed Prior to Order		**To be Completed upon Receipt of Order**	
Date	7/6/06	**Date**	
Material Supplied to Vendor (Y/N)	Y	**Remaining Stock Material Returned From Vendor (Y/N)**	Y
Material Marked with Heat Number and Rolling Direction (Y/N)	Y	**Remaining Stock Material Marked with Heat Number and Rolling Direction (Y/N)**	Y
Dimensions of Material stock provided (L x W x H)	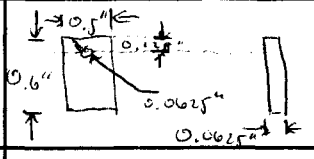	**Remaining Stock Material Dimensions (L x W x H)**	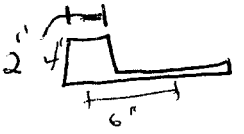
Specimen Quantity Ordered	40	**Specimen Quantity Received**	40
Dimensional Inspection Required (Y/N)	N	**Dimensional Inspection Provided (Y/N)**	Y
Marked Containment Provided (Y/N)	Y	**Marked Containment Used (Y/N)**	Y
Documented in Scientific Notebook Number/Page Number			
NCR Number (if applicable)			

Signature Date

* Sent Extra C-22 HT#2277-3-3266 7/11/06
7/11/06 for Cutting of Specimens
4" x 6" plate

Ken Chiang
SwRI-CNWRA
Phone: (210) 522-2308
Fax: (210) 522-5184
e-mail: kchiang@swri.org

SwRI Drawing 20-R9471-002

All dimensions ±.0005"

unless otherwise specified

To be completed at time of order:

Material: C-22

Heat: 2277-3-3266

Other: Quantity: 40

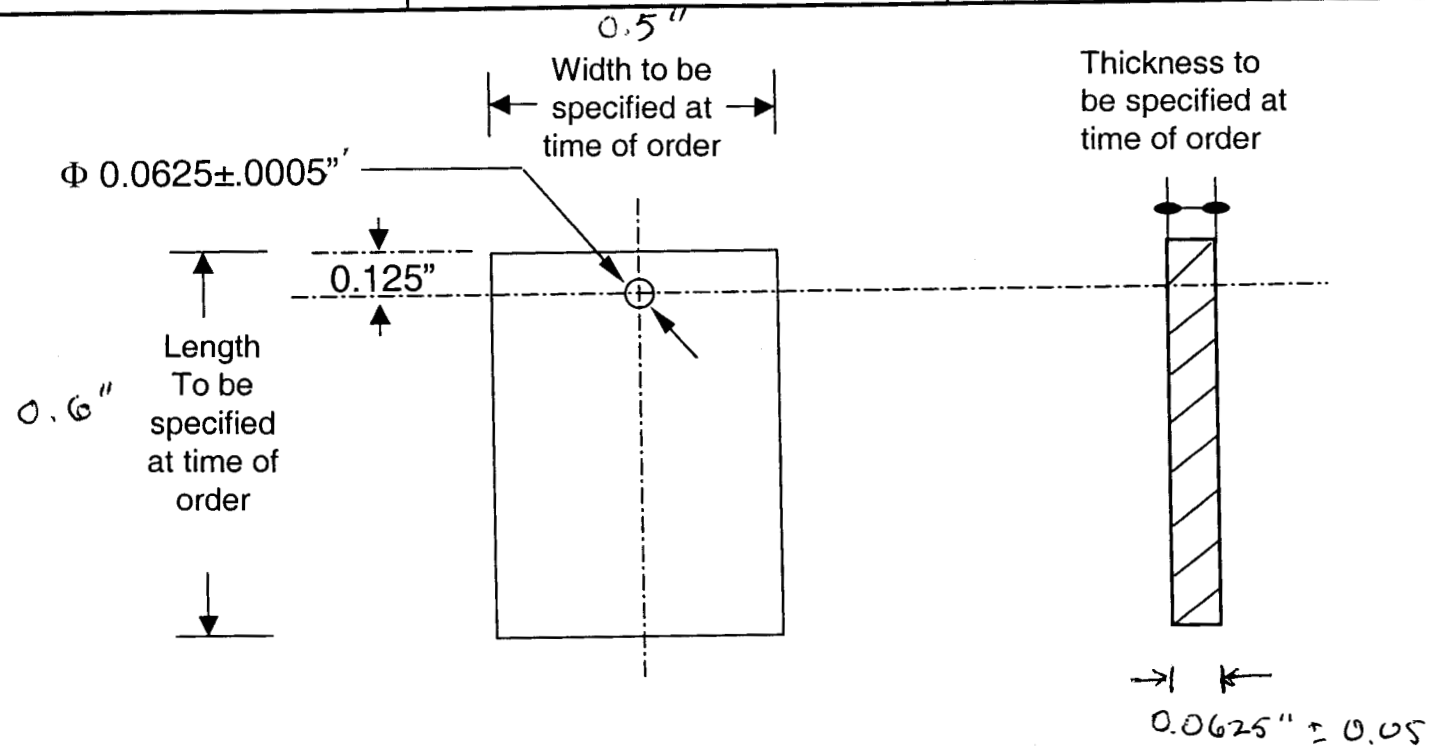

K.J. Chiang 3/26/04
Initiated by K. Chiang Date

3/26/04
Reviewed by V. Jain Date

3/26/04
QA Approval: R. Brient Date

Specimen Machining Documentation Form

Purchase/Work Order Number		—	
Material Identification		C-22	
Material Heat Number		2277-3-3266	
CNWRA Requestor		X. hua He	
Vendor		SWRI Machine shop	
Specimen Description (CNWRA Drawing Number, ASTM Standard)		20.01402.571.019	
To be Completed Prior to Order		**To be Completed upon Receipt of Order**	
Date	9/13/06	**Date**	10/2/06
Material Supplied to Vendor (Y/N)	Y	**Remaining Stock Material Returned From Vendor (Y/N)**	Y
Material Marked with Heat Number and Rolling Direction (Y/N)	Y	**Remaining Stock Material Marked with Heat Number and Rolling Direction (Y/N)**	Y
Dimensions of Material stock provided (L x W x H)	3" x 14"	**Remaining Stock Material Dimensions (L x W x H)**	3" x 14"
Specimen Quantity Ordered	12	**Specimen Quantity Received**	12
Dimensional Inspection Required (Y/N)	Y	**Dimensional Inspection Provided (Y/N)**	Y
Marked Containment Provided (Y/N)	Y	**Marked Containment Used (Y/N)**	Y
Documented in Scientific Notebook Number/Page Number			
NCR Number (if applicable)			

Brian K Dearby / [signature] 9/13/06

Signature Date

Darrell S. Dunn
SwRI-CNWRA
Phone: (210) 522-6090
Fax: (210) 522-5184

Cylindrical Test Specimen

CNWRA Drawing 20.01402.571.019

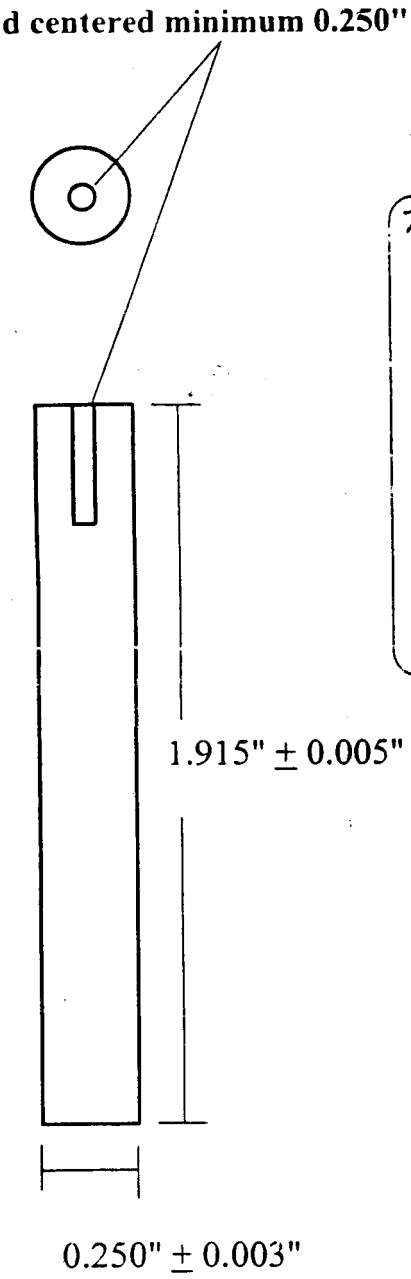

This information is to be completed at time of fabrication.

Material: C-22

Heat #: 2277-3-3266

Specimen Orientation: Perpenticular to rolling direction

Other:

Procedure: IDS. OP 824
Project #: 20.01402
TOTAL PCS. INSPECTED: 12
TOTAL PCS. ACCEPTED: 12
TOTAL PCS. REJECTED: 0
"NR #" IF REJECTS: N/A
INSPECTOR: SWRI 24 QA
LOCATION: CC31 MS
J.C. #: 85567
EQUIPMENT: Mdlsg 002181, Mic 009976, Cdipns 005081
DATE: 9/25/01

Darrell S. Dunn 10/15/01
Initiated by. D. Dunn Date

Mark R. Ehnstrom for 10/15/01
QA Approval B. Mabrito Date

10/15/01
Reviewed by V. Jain Date

Specimen Machining Documentation Form

Purchase/Work Order Number			
Material Identification		C22	
Material Heat Number		2277-3-3266	
CNWRA Requestor		Xihua He	
Vendor		SwRI machine shop	
Specimen Description (CNWRA Drawing Number, ASTM Standard)		20.06002.01.322.006 20.06002.01.322.010	
To be Completed Prior to Order		**To be Completed upon Receipt of Order**	
Date	11/16/06	**Date**	12/7/06
Material Supplied to Vendor (Y/N)	Y	**Remaining Stock Material Returned From Vendor (Y/N)**	Y
Material Marked with Heat Number and Rolling Direction (Y/N)	Y	**Remaining Stock Material Marked with Heat Number and Rolling Direction (Y/N)**	Y
Dimensions of Material stock provided (L x W x H)	12" x 24" 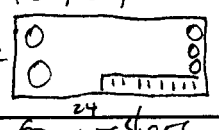 	**Remaining Stock Material Dimensions (L x W x H)**	
Specimen Quantity Ordered	12 for washers 6 for bolts and nuts	**Specimen Quantity Received**	Y
Dimensional Inspection Required (Y/N)	Y	**Dimensional Inspection Provided (Y/N)**	Y
Marked Containment Provided (Y/N)	Y	**Marked Containment Used (Y/N)**	Y
Documented in Scientific Notebook Number/Page Number			
NCR Number (if applicable)			

Signature

12/7/06
Date

103

Xihua He
CNWRA-SwRI
Phone: 210-522-5194
Fax: 210-522-6081
e-mail: xhe@swri.org

SwRI drawing #
20.06002.01.322.006

Serrated Alloy 22 Titanium Grade 7 crevice washer with 24 plateaus

12 for each material

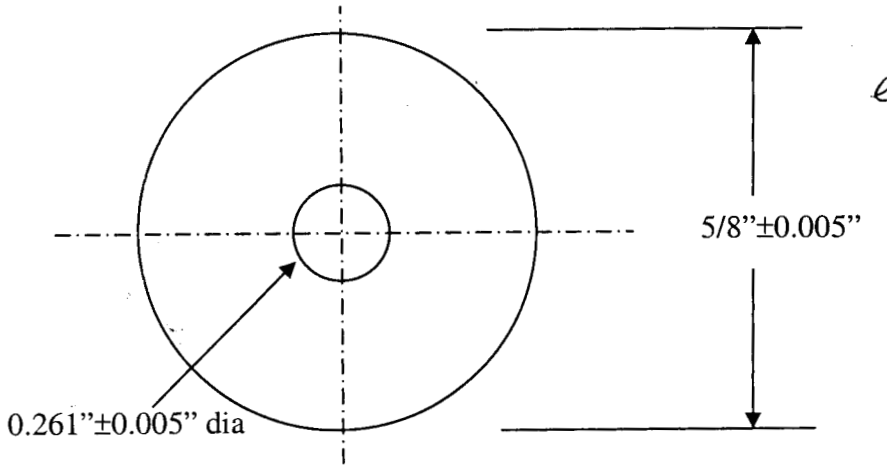

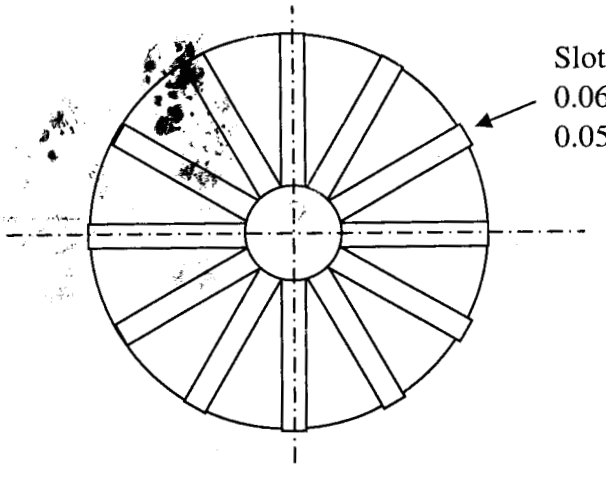

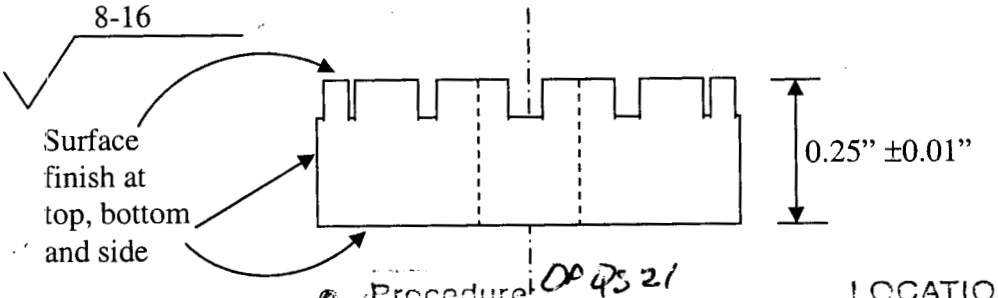

Procedure OP QS 21 LOCATION CC 31MM
Project # J.O. # 83899-02 EQUIPMENT
TOTAL POS. INSPECTED 12
TOTAL POS. ACCEPTED 12 Calipes 003081
TOTAL POS. REJECTED 0
"NR #" IF REJECTS NA

Initiated by: X. He Date

INSPECTOR SwRI 24 QA DATE 12-04-06

QA approval: B. Brient Date

Reviewed by: V. Jain Date

104

Xihua He CNWRA-SwRI Phone: 210-522-5194 Fax: 210-522-6081 e-mail: xhe@swri.org	CNWRA drawing # 20.06002.01.322.010	To be completed at time of order Material: Ti 7 HT# Heat: CN2775 Specimen orientation: Other:

Bolts and nuts for multiple crevice assembly

Alloy 22

Titanium Grade 7

6 sets for each material

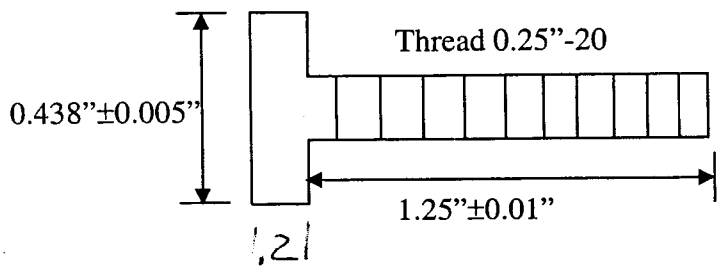

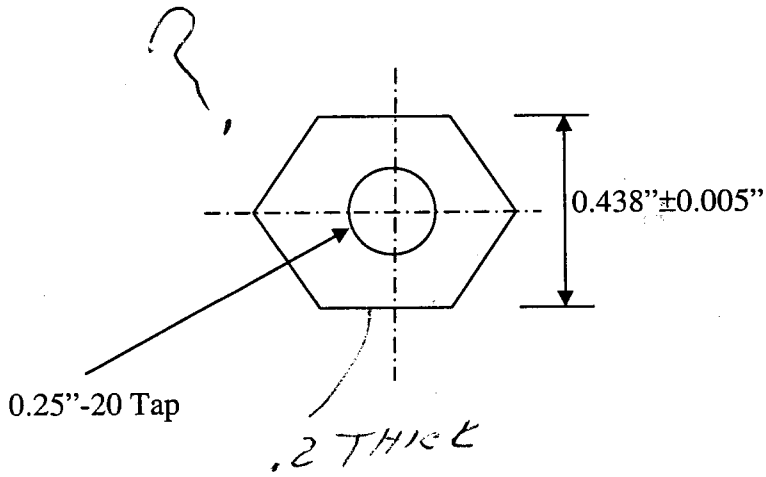

Procedure OP QS21
Project #
TOTAL PCS. INSPECTED 6EA
TOTAL PCS. ACCEPTED 6EA
TOTAL PCS. REJECTED 0
"NR #" IF REJECTED NA
LOCATION CC31 MS
J.O. #83818-02 EQUIPMENT
Calipers 005081
Thd Gage 002176
INSPECTOR SwRI 24 QA
DATE 12-04-06

Initiated by: X. He Date

Reviewed by: V. Jain Date

QA approval: B. Brient Date

Specimen Machining Documentation Form

Purchase/Work Order Number			
Material Identification		C-22	
Material Heat Number		2277-3-3266	
CNWRA Requestor		SwRI Ken Chiang	
Vendor		SwRI Machine shop	
Specimen Description (CNWRA Drawing Number, ASTM Standard)		# 20-03704-042-001 Slow Strain Rate	
To be Completed Prior to Order		**To be Completed upon Receipt of Order**	
Date	11/28/06	**Date**	
Material Supplied to Vendor (Y/N)	Y	**Remaining Stock Material Returned From Vendor (Y/N)**	Y
Material Marked with Heat Number and Rolling Direction (Y/N)	Y	**Remaining Stock Material Marked with Heat Number and Rolling Direction (Y/N)**	Y
Dimensions of Material stock provided (L x W x H)	2' 2'	**Remaining Stock Material Dimensions (L x W x H)**	
Specimen Quantity Ordered	24	**Specimen Quantity Received**	
Dimensional Inspection Required (Y/N)	Y	**Dimensional Inspection Provided (Y/N)**	
Marked Containment Provided (Y/N)	Y	**Marked Containment Used (Y/N)**	
Documented in Scientific Notebook Number/Page Number			
NCR Number (if applicable)			

Signature: [signature] Date: 11/28/06

Specimen Machining Documentation Form

Purchase/Work Order Number		757641D	
Material Identification		-22	
Material Heat Number		2277-3-3266	
CNWRA Requestor		Xihua He	
Vendor		Texas Toolmakers	
Specimen Description (CNWRA Drawing Number, ASTM Standard)		20-06002-01-322-002	
To be Completed Prior to Order		**To be Completed upon Receipt of Order**	
Date	12/22/06	**Date**	
Material Supplied to Vendor (Y/N)	Y	**Remaining Stock Material Returned From Vendor (Y/N)**	Y
Material Marked with Heat Number and Rolling Direction (Y/N)	Y	**Remaining Stock Material Marked with Heat Number and Rolling Direction (Y/N)**	Y
Dimensions of Material stock provided (L x W x H)	12"x18"x0.5"	**Remaining Stock Material Dimensions (L x W x H)**	12"x18"x0.5"
Specimen Quantity Ordered	12	**Specimen Quantity Received**	12
Dimensional Inspection Required (Y/N)	Y	**Dimensional Inspection Provided (Y/N)**	Y
Marked Containment Provided (Y/N)	Y	**Marked Containment Used (Y/N)**	Y
Documented in Scientific Notebook Number/Page Number			
NCR Number (if applicable)			

Signature

1/10/07
Date

DIMENSIONAL INSPECTION REPORT

TEXAS TOOLMAKERS, INC.

Job No.:	Part No.:	Rev. No.:	P.O. No.:
38781/1	20-06002-01-322-002	–	757641D

Customer:	Part Name:	Log No.:
	Crevise Corrosion Specimen	7003002C

Inspection Plan:	Quantity:	Sample Size:	Accept No.:	Reject No.:	NR No.:
☐ 100 % ☑ Specified Dim. ☐ 1st Article	12	12	12	Ø	Ø

Zone	Dim. / Char.	Tolerance*	Actual	Equipment S/N	Comments
1	.400		.401	TTI 204	
2	1.000		1.000	TTI 077	
3	.750		.746	TTI 204	
4	.750		.750	TTI 204	
5	.375		.374	TTI 204	
6	.325		.325	TTI 204	
7	.125 R		.125 R	TTI 204	
8	Drill to Clean #	8/32	.181	TTI 204	
9	.200		.200	TTI 204	

* Recorded if not affected by tolerance block.

Sheet 1 of 1

Inspection Performed by: [signature] Date 1/9/06 Customer (as applicable) Date

TTI Form QF-100201 Rev 2

Specimen Machining Documentation Form

Purchase/Work Order Number			
Material Identification		C-22	
Material Heat Number		2277-3-3266	
CNWRA Requestor		Ken Chiang	
Vendor		SWRI Machine Shop	
Specimen Description (CNWRA Drawing Number, ASTM Standard)		20.R9471-002	
To be Completed Prior to Order		**To be Completed upon Receipt of Order**	
Date	5/29/07	**Date**	7/17/07
Material Supplied to Vendor (Y/N)	Y	**Remaining Stock Material Returned From Vendor (Y/N)**	Y
Material Marked with Heat Number and Rolling Direction (Y/N)	Y	**Remaining Stock Material Marked with Heat Number and Rolling Direction (Y/N)**	Y
Dimensions of Material stock provided (L x W x H)	3.75" x 6" x 0.5 60	**Remaining Stock Material Dimensions (L x W x H)**	4 pieces 1/4" x 6" x 1/2"
Specimen Quantity Ordered	60	**Specimen Quantity Received**	60
Dimensional Inspection Required (Y/N)	Y	**Dimensional Inspection Provided (Y/N)**	Y
Marked Containment Provided (Y/N)	Y	**Marked Containment Used (Y/N)**	Y
Documented in Scientific Notebook Number/Page Number			
NCR Number (if applicable)			

Signature 5/29/07 Date

Specimen Machining Documentation Form

Purchase/Work Order Number			
Material Identification		C-22	
Material Heat Number		2277-3-3266	
CNWRA Requestor		Ken Chiang	
Vendor		SwRI Machine Shop	
Specimen Description (CNWRA Drawing Number, ASTM Standard)		20.01402.571.019 R1	
To be Completed Prior to Order		**To be Completed upon Receipt of Order**	
Date	5/29/07	**Date**	
Material Supplied to Vendor (Y/N)	Y	**Remaining Stock Material Returned From Vendor (Y/N)**	
Material Marked with Heat Number and Rolling Direction (Y/N)	Y	**Remaining Stock Material Marked with Heat Number and Rolling Direction (Y/N)**	
Dimensions of Material stock provided (L x W x H)	3.75" x 6" x 0.5"	**Remaining Stock Material Dimensions (L x W x H)**	
Specimen Quantity Ordered	20	**Specimen Quantity Received**	
Dimensional Inspection Required (Y/N)	Y	**Dimensional Inspection Provided (Y/N)**	
Marked Containment Provided (Y/N)	Y	**Marked Containment Used (Y/N)**	
Documented in Scientific Notebook Number/Page Number			
NCR Number (if applicable)			

Signature 5/29/07 Date

Specimen Machining Documentation Form

Purchase/Work Order Number			
Material Identification		C-22	
Material Heat Number		2277-3-3266	
CNWRA Requestor		(Andy) Hundai Jung	
Vendor		SwRI Machine Shop	
Specimen Description (CNWRA Drawing Number, ASTM Standard)		20.06002-02.322-021	
To be Completed Prior to Order		**To be Completed upon Receipt of Order**	
Date	8/20/07	**Date**	9/19/07
Material Supplied to Vendor (Y/N)	Y	**Remaining Stock Material Returned From Vendor (Y/N)**	Y
Material Marked with Heat Number and Rolling Direction (Y/N)	Y	**Remaining Stock Material Marked with Heat Number and Rolling Direction (Y/N)**	Y
Dimensions of Material stock provided (L x W x H)	24" 12"	**Remaining Stock Material Dimensions (L x W x H)**	24 12"
Specimen Quantity Ordered	72	**Specimen Quantity Received**	72
Dimensional Inspection Required (Y/N)	Y	**Dimensional Inspection Provided (Y/N)**	Y
Marked Containment Provided (Y/N)	Y	**Marked Containment Used (Y/N)**	Y
Documented in Scientific Notebook Number/Page Number			
NCR Number (if applicable)			

Signature 8/20/07 Date

20.06002.01.322

111

Hundal (Andy) Jung SwRI-CNWRA Phone: (210)522-4238 Fax: (210)522-6081 Email: hjung@swri.org	CNWRA Drawing: 20.06002.02.322.021 Dimension Tolerance +/-0.005" unless otherwise specified 16 rms surface finish	To be completed at time of order Material: C-22 Heat: 2277-3-3266 Specimen orientation: Other:

Cylindrical Hollow-Shaped Corrosion Samples

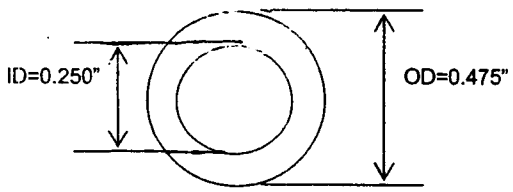

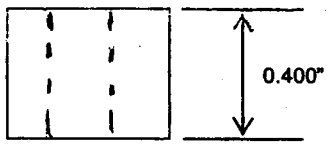

Initiated by H. Jung Date 8/13/07

Quanity = 72

Review by K. Axler Date 8/15

QA Approval R. Brient Date 8/15/07

20.06002.01.322

112

Hundal (Andy) Jung SwRI-CNWRA Phone: (210)522-4238 Fax: (210)522-6081 Email: hjung@swri.org	CNWRA Drawing: 20.06002.02.322.021 Dimension Tolerance +/-0.005" unless otherwise specified 16 rms surface finish	To be completed at time of order Material: C-22 Heat: 2277-3-3266 Specimen orientation: Other:

Cylindrical Hollow-Shaped Corrosion Samples

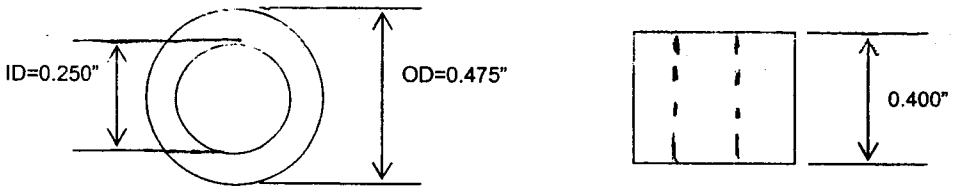

3/8 O.D
5/32 I.D.

Initiated by H. Jung Date 8/13/07

Quanity = 72

Review by K. Axler Date 8/15

QA Approval R. Brient Date 8/15/07

Procedure IQS-W1-821 LOCATION CC31 MS
Project # J.C. # 85148 EQUIPMENT Calipers 00508 Due 12-17-07
TOTAL PCS. INSPECTED 78
TOTAL PCS. ACCEPTED 78
TOTAL PCS. REJECTED 0
'NR #' IF REJECTS NA

INSPECTOR SwRI QA DATE 9/12/07

Specimen Machining Documentation Form

Purchase/Work Order Number			
Material Identification		C22	
Material Heat Number		2277-3-3 266	
CNWRA Requestor		Xihua He	
Vendor		Texas Toolmakers	
Specimen Description (CNWRA Drawing Number, ASTM Standard)		20-06022.01.322.002	
To be Completed Prior to Order		**To be Completed upon Receipt of Order**	
Date	9/28/07	**Date**	10/9/07
Material Supplied to Vendor (Y/N)	Y	**Remaining Stock Material Returned From Vendor (Y/N)**	Y
Material Marked with Heat Number and Rolling Direction (Y/N)	Y	**Remaining Stock Material Marked with Heat Number and Rolling Direction (Y/N)**	Y
Dimensions of Material stock provided (L x W x H)	19" x 12" x 0.5" with many cut holes	**Remaining Stock Material Dimensions (L x W x H)**	19 x 12 x 0.5 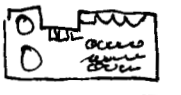
Specimen Quantity Ordered	24	**Specimen Quantity Received**	24
Dimensional Inspection Required (Y/N)	Y	**Dimensional Inspection Provided (Y/N)**	Y
Marked Containment Provided (Y/N)	Y	**Marked Containment Used (Y/N)**	Y
Documented in Scientific Notebook Number/Page Number			
NCR Number (if applicable)			

Signature

10/9/07
Date

114

11411 East Coker Loop
San Antonio, Texas 78216
Phone: (210) 494-3651
Fax: (210) 494-6139
www.texastoolmakers.com

TEXAS TOOL MAKERS INC

A8306

ISO 9001:2000

CERTIFICATE OF CONFORMANCE

TO: Southwest Research Institute
6220 Culebra Road
San Antonio, Tx. 78238-5166

CUSTOMER P.O. 758370D

TTI JOB #: 39660/1

DESCRIPTION 24 EA P/N 20-06002-01-322-002 ALLOY 22 CREVICE SPECIMEN

WE CERTIFY THAT THE ITEM(S) ON THE ABOVE REFERENCED PURCHASE ORDER HAVE BEEN PROCESSED AND/OR MANUFACTURED IN ACCORDANCE WITH:

Drawing

RECORDS ARE ON FILE AT THIS FACILITY, WHICH VERIFY OUR PROCESS CONTROLS, AND AVAILABLE FOR REVIEW UPON REQUEST. TEST RESULTS ARE AS FOLLOWS:

Accepted

TEXAS TOOLMAKERS,

BY : (Steve Espinoza)

TITLE: Q. C. Inspection

DATE : 10/8/07

DIMENSIONAL INSPECTION REPORT

TEXAS TOOLMAKERS, INC.

Job No.:	Part No.:	Rev. No.:	P.O. No.:
39660/1	70-06002-01-322-002		758370D

Customer:	Part Name:	Log No.:
SWRI	Alloy 22 Crevice Specimens	7271004-C

Inspection Plan:	Quantity:	Sample Size:	Accept No.:	Reject No.:	NR No.:
☐ 100 % ☑ Specified Dim. ☐ 1st Article	24	24	24	Ø	Ø

Zone	Dim. / Char.	Tolerance*	Actual	Equipment S/N	Comments
1	.200		.200	TTI 204	
2	.400		.400	TTI 204	
3	1.000		1.000	TTI 204	
4	.750		.747	TTI 204	
5	.750		.748	TTI 204	
6	.375		.373	TTI 204	
7	.325		.325	TTI 204	
8	.125		.125	TTI 024	
9	#8-32 clear		.183	TTI 204	

* Recorded if not affected by tolerance block.

Sheet 1 of 1

Inspection Performed by: [signature] Date 10/8/07 Customer (as applicable) Date

TTI Form QF-100201 Rev 2

Darrell S. Dunn
SwRI-CNWRA
Phone: (210) 522-6090
Fax: (210) 522-5184
e-mail: ddunn@swri.org

CNWRA Drawing 20-06002-01-322-002
Dimensional tolerances +/- 0.005"

To be completed at time of order:
Material: Alloy 22
Heat: 2277-3-3266
Specimen Orientation: Normal to rolling direction
Other:

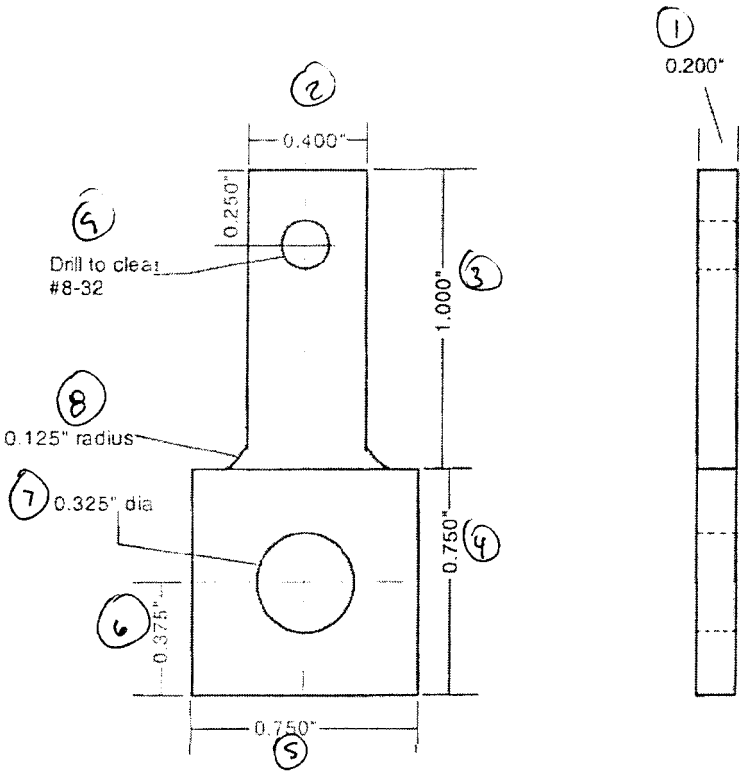

Darrell S. Dunn 3/11/05
Initiated by. D. Dunn Date

3/11/05
Reviewed by V. Jain Date

Mark R. Ehrnstrom 3/11/05
QA Approval B. Brient for Date

Specimen Machining Documentation Form

Purchase/Work Order Number			
Material Identification		C-22	
Material Heat Number		2277-3-3266	
CNWRA Requestor		Andy Jung	
Vendor		Swei machine shop	
Specimen Description (CNWRA Drawing Number, ASTM Standard)		20.06002-02.XXY	
To be Completed Prior to Order		**To be Completed upon Receipt of Order**	
Date	12/5/07	**Date**	
Material Supplied to Vendor (Y/N)	Y	**Remaining Stock Material Returned From Vendor (Y/N)**	
Material Marked with Heat Number and Rolling Direction (Y/N)	Y	**Remaining Stock Material Marked with Heat Number and Rolling Direction (Y/N)**	
Dimensions of Material stock provided (L x W x H)	8" 4" 12" ½"	**Remaining Stock Material Dimensions (L x W x H)**	
Specimen Quantity Ordered	12/19/07 changed ~~12~~ 24	**Specimen Quantity Received**	
Dimensional Inspection Required (Y/N)	Y	**Dimensional Inspection Provided (Y/N)**	
Marked Containment Provided (Y/N)	Y	**Marked Containment Used (Y/N)**	

Documented in Scientific Notebook Number/Page Number

NCR Number (if applicable)

Signature

12/5/07
Date

Hundal (Andy) Jung SwRI-CNWRA Phone: (210)522-4238 Fax: (210)522-6081 Email: hjung@swri.org	CNWRA Drawing: 20.06002.02.XXX Dimension Tolerance +/- 0.2mm unless otherwise specified 16 rms surface finish	To be completed at time of order Material: Alloy 22 Heat: 2277-3-3266 Specimen orientation: Other:

Disc-shaped Corrosion Samples

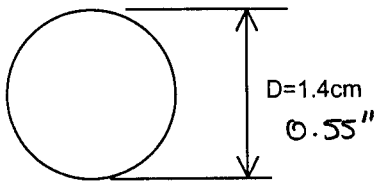

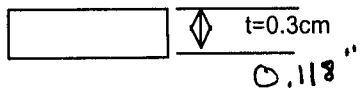

Initiated by H. Jung Date

Review by K. Axler Date

QA Approval R. Brient Date

Hundal (Andy) Jung SwRI-CNWRA Phone: (210)522-4238 Fax: (210)522-6081 Email: hjung@swri.org	CNWRA Drawing: 20~~.06002.02~~. 14002.01.M1. Dimension Tolerance +/- 0.2mm unless otherwise specified 16 rms surface finish	To be completed at time of order Material: Alloy 22 Heat: Specimen orientation: Other:

Disc-shaped Corrosion Samples

Initiated by H. Jung Date 12/10/07

Review by K. Axler Date 12-10-07

QA Approval R. Brient Date 12-10-07

Specimen Machining Documentation Form

Purchase/Work Order Number			
Material Identification		C-22	
Material Heat Number		2277-3-7266	
CNWRA Requestor		Todd Mintz	
Vendor		Suki Machine Shop	
Specimen Description (CNWRA Drawing Number, ASTM Standard)		20-6002-01-322-020	
To be Completed Prior to Order		**To be Completed upon Receipt of Order**	
Date	12/17/07	**Date**	1/11/08
Material Supplied to Vendor (Y/N)	Y	**Remaining Stock Material Returned From Vendor (Y/N)**	Y
Material Marked with Heat Number and Rolling Direction (Y/N)	Y	**Remaining Stock Material Marked with Heat Number and Rolling Direction (Y/N)**	Y
Dimensions of Material stock provided (L x W x H)	12" 12"	**Remaining Stock Material Dimensions (L x W x H)**	12" 12"
Specimen Quantity Ordered	16	**Specimen Quantity Received**	20
Dimensional Inspection Required (Y/N)	Y	**Dimensional Inspection Provided (Y/N)**	Y
Marked Containment Provided (Y/N)	Y	**Marked Containment Used (Y/N)**	Y
Documented in Scientific Notebook Number/Page Number			
NCR Number (if applicable)			

Signature 12/19/07 Date

121

Darrell S. Dunn Division 18 Bldg 128 Phone: 6090 Fax: 6965	Flat Metal Sensor Element Drawing 20.06002.01.322.020 Page 2 of 2 Dimensional tolerance +/- 0.010" inless otherwise specified Material: Specified at time of order

Specimen Thickness +/- Tolerance: 0.062" +/- 0.003"

MATERIAL	QUANTITY
Alloy 22	16 - 20

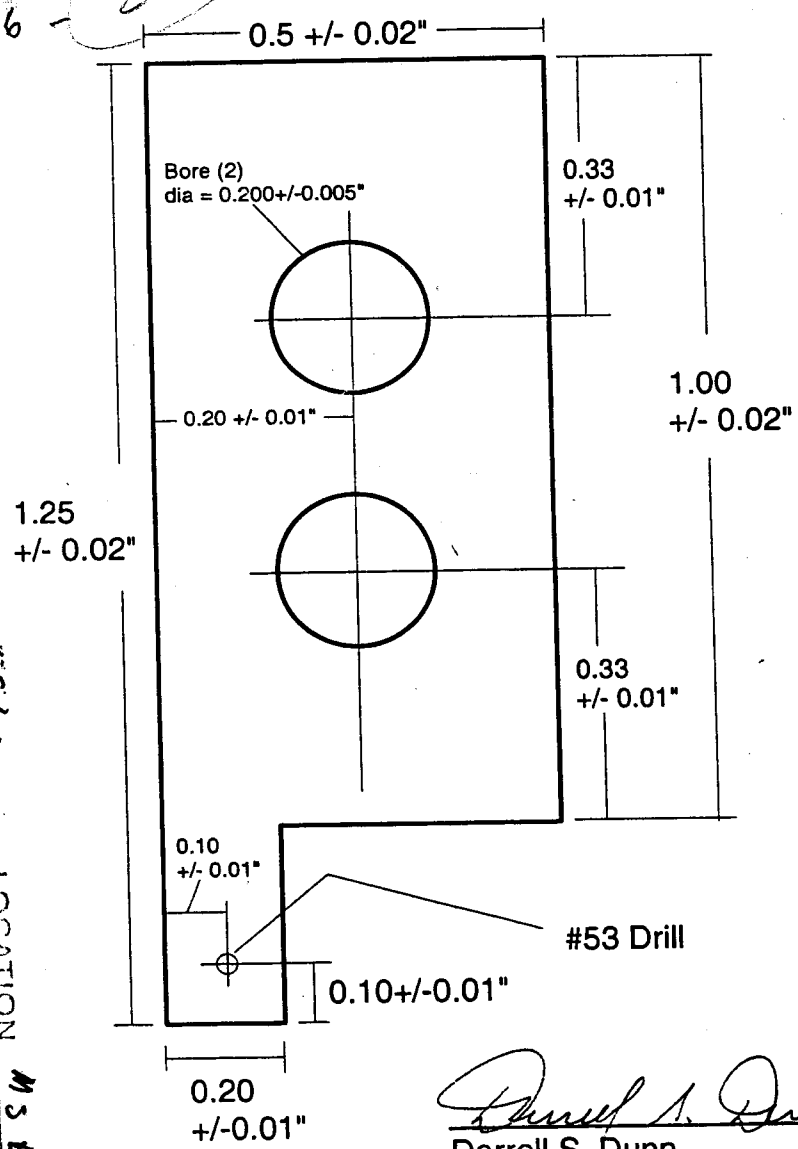

Procedure 1/65 WT-82
Project #
TOTAL POS. INSPECTED 16
TOTAL POS. ACCEPTED 16
TOTAL POS. REJECTED 0
"NR #" IF REJECTS NA
INSPECTOR
LOCATION MS Bldg #164
J.C. 85729
EQUIPMENT
Cal 008051
DATE 1-14-08

Darrell S. Dunn 5/30/06
Darrell S. Dunn date

Vijay Jain 5/31/06
Vijay Jain date

Bob Brient 5/31/06
Bob Brient date

Material: Alloy C-22

Sample ID/Heat#: 2277-6-3120

Page numbers: 122 - 132

CENTER FOR NUCLEAR WASTE REGULATORY ANALYSES

SAMPLE CUSTODY/CONTROL LOG ENTRY FORM

SAMPLE IDENTIFICATION (Mandatory) C-22 HT# 2277-6-3120

SAMPLE DESIGNATION C-22 HT# 2277-6-3120

DESCRIPTION OF SAMPLE (Mandatory) Alloy C-22 HT# 2277-6-3120

(18) 3" X 6" X 0.75" Thick plates

ASTM - SB-575 UNS# N06022

ASTM - B- 574 06 UNS# N06022

REFERENCE TOP OR SCIENTIFIC NOTEBOOK ENTRY

NB # 770 Pg # 54-60

AMOUNT OF SAMPLE (18) pieces SIZE 3" X 6" X 0.75" Thick

DATE OF SAMPLE RECEIPT (Mandatory) 3/30/07

DATE OF INITIAL LOG ENTRY (Mandatory) 3/30/07 BY [illegible]

SAMPLE STORAGE LOCATION (Mandatory) B. 57

COLLECTION SITE (Reference Maps or Field Notes As Required)

PERSON(S) WHO COLLECTED SAMPLE(S)

Tsan Kuang Chiang

SUPPLIER Haynes International 1020 W. Park Ave · Kokomo, Indiana 46902

OTHER

CNWRA FORM TOP-004

124

SOUTHWEST RESEARCH INSTITUTE

03/27/2007

RECEIPT TRAVELER

~~Page 1~~

Warehouse: REC

Receipt ID: RC-0319505 **Packing Slip:** 491664-1-0 **Receiver:** Rios, Ignacio R.

Receipt Date: 03/27/2007

PO: 764987G **Rel:** 0 **Change Ord:** 0 **Vendor:** 509360 HAYNES INTERNATIONAL, INC

Receipt Notes: UPS-34-35

Line: 1 **Unit Cost:** $146.0300 **Planner:**

Item: Hastelloy C-22 plate (B575), 3/4"x3"x6"

TSAN KUANG CHIANG

U/M: EA **QC Reqd:** N **Cert of Conf Reqd:** N **Source Insp Reqd:** N **Insp Type:** **Hazmat:**

Deliver To: B57 **Order Ref:** G1 **Requisition:** 0701 6662

Qty Rcv: 18.0000 **Qty Accpt:** 18.0000 **Qty Rej:**

Location: **Location:** **Location:**

Lot Reqd: **Serial Reqd:**

20/57

Prime Contract	Priority	Project	Organization	Account
NRC0202012	NONE	06002.01.342	1.20.01.55	704-000

Notes:

INSPECT YOUR SHIPMENT NOW!

UNLESS YOU NOTIFY RECEIVING (ext. 5618) OF ANY DISCREPANCIES WITHIN SEVEN WORK DAYS OF THE RECEIPT DATE SHOWN AT THE TOP LEFT, PAYMENT WILL BE PROCESSED AND COSTS POSTED TO YOUR ACCOUNT.

REJECTION CODE _____

(IN CASE OF DISCREPANCY)

125

HAYNES
1020 W. Park Ave.
Kokomo, Indiana 46902-9013

CONTENTS: MERCHANDISE. POSTMASTER—THIS PARCEL MAY BE OPENED FOR POSTAL INSPECTION IF NECESSARY. IF UNDELIVERED IN 10 DAYS, RETURN POSTAGE GUARANTEED

D 56176
SOUTHWEST RESEARCH INSTITUTE
6220 CULEBRA RD
SAN ANTONIO
TX 78228-0510 USA

Freight Terms: PP AND ADD

1020 W. Park Ave.
Kokomo, Indiana 46902-9013

CONTENTS: MERCHANDISE. POSTMASTER—THIS PARCEL MAY BE OPENED FOR POSTAL INSPECTION IF NECESSARY. IF UNDELIVERED IN 10 DAYS, RETURN POSTAGE GUARANTEED

I
SOUTHWEST RESEARCH INSTITUTE
9503 W COMMERCE
SAN ANTONIO
TX 78277 USA

Terms: NET 30, US FUND

PACKING SLIP

SALES ORDER NUMBER: 491664-1-0

NET WEIGHT SHIPPED
TEST PC. W
GROSS WEIGHT SHIPPED: 64 / 64
PIECES SHIPPED: 12 / 12
TEST PIECE
FEET SHIPPED
PACKAGES & KIND: 2 Boxes
PACKED BY
DATE SHIPPED
COD
VALUE $
TRANSPORTATION
CHARGE $
☑ COMPLETE ☐ INCOMPLETE
☑ PREPAID ☐ COLLECT
QUANTITY ORDERED
TRANS. RESPONSIBILITY
TITLE PASSAGE

SALES ORDER NO.	PURCHASE ORDER	REFERENCE
491664-1-0	7649876	

PRODUCT CODE	PART NUMBER	GOV'T. RATING
2777782UM202001		

CONTRACT NUMBER	JOB NUMBER
NRC02-02012	

PRODUCT DESCRIPTION	GAUGE RANGE	WIDTH RANGE	LENGTH RANGE
HASTELLOY® C-276® ALLOY PLATE	.7500	3.0000	6.0000

Min Ord Qty: 10 Max Ord Qty: 10 UOM: PC

HEAT NUMBER

34-35

Load No.

BL – 139743
SHIPPED VIA

SPECIFICATION
ASTM-B-575, ... UNS N10276
ASTM-B-906, ... UNS N10276

#2 Ugt-41

CERTIFICATION OF TESTS • RAPPORT D'ESSAIS CERTIFIE • WERKSZEUGNIS

Sales Order No / Reference Commande / Bestellungs Nr	Date Entered / Date De Commande / Bestelldatum	Customer Reference / Reference Client / Kundenbestdlldaten	Report No. / Rapport No / Zeugnis Nr	Pages of Pages / Page de Pages / Anzahl der Seiten
491664001-0	03/21/07	764987G	20070323053	1 Of 4

HAYNES International

CUSTOMER COPY

Haynes International
1020 West Park Avenue
PO Box 9013
Kokomo, Indiana, 46902

Sold To • Client • Bestellaranschrift

SOUTHWEST RESEARCH INSTITUTE
6220 CULEBRA RD
SAN ANTONIO
TX 782280510 USA

Ship To • Destinataire • Bestellmenge

SOUTHWEST RESEARCH INSTITUTE
9503 W COMMERCE
SAN ANTONIO
TX 78277 USA

Product Description • Description Produit • Material Beshreibung

0.750 x 3 x 6

HASTELLOY(R) C-22 (R) ALLOY - PLATE
Nadcap CERTIFICATE NUMBER 0089
S400 9/01/2006, S1000 1/3/2005, EN 10204 3.1, AS9100

Specification • Specification • Spezifikation	Quantity Ordered / Quantie Commandee / Bestellemenge	Quantity Shipped / Quantitie Expediee / Liefermenge
ASME-SB-575, 04, UNS# N06022; ASTM-B-574, 06, UNS# N06022	18 PC	18 PC

Chemical Analysis • Analyse Chimique • Chemische Analyse

Heat Number / Numero De Coulee / Charge Nr	Al	B	C	Cb+Ta (Nb+Ta)	Co	Cr	Cu	Fe	Mn	Mo	Ni	P	S	Si	Ti	V	W
2277 6 3120			0.004		0.55	21.30		3.70	0.26	13.20	BAL	0.006	0.004	0.02		<0.01	2.90

	Cb(Nb)	Ta	Zr	Bi	Se	La	C+N-Cb/9	Pb	Mg	Y	Ag	N	Ca	Al+Ti	Ni+Co	Ni+Mo
2277 6 3120																

Certified By • Certifie Par • Bescheinigt Durch: Tamara Mains 3/23/2007
Certification Technician

THE DATA CONTAINED HEREIN WAS OBTAINED FROM SAMPLES THAT ARE REPRESENTATIVE OF THE PRODUCTS IN THE SUBJECT SHIPMENT. THIS MATERIAL MEETS THE REQUIREMENTS OF THE LISTED SPECIFICATION(S), MODIFIED BY ANY EXCEPTIONS OR PURCHASE ORDER REQUIREMENTS.
THE RECORDING OF FALSE, FICTICIOUS OR FRAUDULENT STATEMENTS OR ENTRIES ON THIS DOCUMENT MAY BE PUNISHED AS A FELONY UNDER FEDERAL STATUES INCLUDING FEDERAL LAW, TITLE 18, CHAPTER 47. THIS DOCUMENT SHALL NOT BE REPORDUCED, EXCEPT IN FULL, WITHOUT THE WRITTEN CONSENT OF HAYNES INTERNATIONAL, INC.
SPECIFICATION MARKING REQUIREMENTS MAY BE WAIVED ON ORDERS REQUIRING MULTIPLE MATERIAL SPECIFICATIONS.

CERTIFICATION OF TESTS • RAPPORT D'ESSAIS CERTIFIE • WERKSZEUGNIS

Sales Order No / Reference Commande / Bestellungs Nr	Date Entered / Date De Commande / Bestelldatum	Customer Reference / Reference Client / Kundenbestelldaten	Report No. / Rapport No / Zeugnis Nr	Pages of Pages / Page de Pages / Anzahl der Seiten
491664001-0	03/21/07	764987G	20070323053	2 Of 4

HAYNES International

CUSTOMER COPY

Haynes International
1020 West Park Avenue
PO Box 9013
Kokomo, Indiana, 46902

Sold To • Client • Bestellaranschrift

SOUTHWEST RESEARCH INSTITUTE
6220 CULEBRA RD
SAN ANTONIO
TX 782280510 USA

Ship To • Destinataire • Bestellmenge

SOUTHWEST RESEARCH INSTITUTE
9503 W COMMERCE
SAN ANTONIO
TX 78277 USA

Product Description • Description Produit • Material Beshreibung

0.750 x 3 x 6

HASTELLOY(R) C-22 (R) ALLOY - PLATE
Nadcap CERTIFICATE NUMBER 0089
S400 9/01/2006, S1000 1/3/2005, EN 10204 3.1, AS9100

Specification • Specification • Spezifikation

ASME-SB-575, 04, UNS# N06022; ASTM-B-574, 06, UNS# N06022

Quantity Ordered / Quantie Commandee / Bestellemenge	Quantity Shipped / Quantite Expediee / Liefermenge
18 PC	18 PC

Tensile Test at Room Temperature • Essai De Traction A Temp. Ambiante • Zugversuch Bei Raum Temp.

Ultimate / Zugfestigkeit	1% Yield / Lim. Elast. A 1% / 1% Strieckgrenze	0.2% Yield / Lim. Elast. A 0.2% / 0.2% Strieckgrenze	% Elong In / % Allong EN / % Dehnung 4D	%RA / %RA	
108000 PSI	52000 PSI	49000 PSI	70 %	81.5 %	1) A)

Tensile Test at Elevated Temperature • Essai De Traction A Hte.Temp. Warm Zugversuch

Test / Essai / Versuch / Temp:	Ultimate / Zugfestigkeit	1% Yield / Lim. Elast. A 1% / 1% Strieckgrenze	0.2% Yield / Lim. Elast. A 0.2% / 0.2% Strieckgrenze	% Elong In / % Allong EN / % Dehnung	%RA / %RA	

Stress Rupture Temperature • Essai A Charge De Rupture Zeitstandversuch

Test / Essai / Versuch / Temp.	Stress / Constrainte / Spannung	Hours / Heures / Stunden	% Elong In / % Allong EN / % Dehnung	% RA / % RA	

Certified By • Certifie Par • Bescheinigt Durch: Tamara Mains
Certification Technician

3/23/2007

1) 2744566901

THE DATA CONTAINED HEREIN WAS OBTAINED FROM SAMPLES THAT ARE REPRESENTATIVE OF THE PRODUCTS IN THE SUBJECT SHIPMENT. THIS MATERIAL MEETS THE REQUIREMENTS OF THE LISTED SPECIFICATION(S), MODIFIED BY ANY EXCEPTIONS OR PURCHASE ORDER REQUIREMENTS.
THE RECORDING OF FALSE, FICTICIOUS OR FRAUDULENT STATEMENTS OR ENTRIES ON THIS DOCUMENT MAY BE PUNISHED AS A FELONY UNDER FEDERAL STATUES INCLUDING FEDERAL LAW, TITLE 18, CHAPTER 47. THIS DOCUMENT SHALL NOT BE REPORDUCED, EXCEPT IN FULL, WITHOUT THE WRITTEN CONSENT OF HAYNES INTERNATIONAL, INC.
SPECIFICATION MARKING REQUIREMENTS MAY BE WAIVED ON ORDERS REQUIRING MULTIPLE MATERIAL SPECIFICATIONS.

127

CERTIFICATION OF TESTS • RAPPORT D'ESSAIS CERTIFIE • WERKSZEUGNIS

Sales Order No Reference Commande Bestellungs Nr	Date Entered Date De Commande Bestelldatum	Customer Reference Reference Client Kundenbestdldaten	Report No. Rapport No Zeugnis Nr	Pages of Pages Page de Pages Anzahl der Seiten
491664001-0	03/21/07	764987G	20070323053	3 Of 4

HAYNES International

CUSTOMER COPY

Haynes International
1020 West Park Avenue
PO Box 9013
Kokomo, Indiana, 46902

Sold To • Client • Bestellaranschrift
SOUTHWEST RESEARCH INSTITUTE
6220 CULEBRA RD
SAN ANTONIO
TX 782280510 USA

Ship To • Destinataire • Bestellmenge
SOUTHWEST RESEARCH INSTITUTE
9503 W COMMERCE
SAN ANTONIO
TX 78277 USA

Product Description • Description Produit • Material Beshreibung
0.750 x 3 x 6
.
HASTELLOY(R) C-22 (R) ALLOY - PLATE
Nadcap CERTIFICATE NUMBER 0089
S400 9/01/2006, S1000 1/3/2005, EN 10204 3.1, AS9100

Specification • Specification • Spezifikation	Quantity Ordered Quantie Commandee Bestellemenge	Quantity Shipped Quantitie Expediee Liefermenge
ASME-SB-575, 04, UNS# N06022; ASTM-B-574, 06, UNS# N06022	18 PC	18 PC

Annealed Hardness Durette Recuit Geglueht Haerte	Aged Hardness Durette Vieilli Gealtert Haerte		Grain Size Grosseur De Grain Korngroesse						IGA	Uniformity	Corrosion Rate		Oxidation Rate	Charpy Impact Test				Creep Rupture					
			Grain Size	Predominant Grain Size	Recry. Grain	Unrecry. Grain %	ALA	P&W Figure Number	Attack Depth		Corrosion MPY	Test Method		Toughness Avg Ft. Lbs.	Toughness 1 Ft. Lbs.	Toughness 2 Ft. Lbs.	Toughness 3 Ft. Lbs.	Test Essai Versuch Temp:	Stress Constrainte Spannung PSI	Hours Heures Stunden	% Elong In % Allong EN % Dehnung	% Elong @ 15 Hrs	
90 HRB		1) A)	2																				

Certified By • Certifie Par • Bescheinigt Durch: Tamara Mains 3/23/2007 1) 2744566901
Certification Technician

THE DATA CONTAINED HEREIN WAS OBTAINED FROM SAMPLES THAT ARE REPRESENTATIVE OF THE PRODUCTS IN THE SUBJECT SHIPMENT. THIS MATERIAL MEETS THE REQUIREMENTS OF THE LISTED SPECIFICATION(S), MODIFIED BY ANY EXCEPTIONS OR PURCHASE ORDER REQUIREMENTS.
THE RECORDING OF FALSE, FICTITIOUS OR FRAUDULENT STATEMENTS OR ENTRIES ON THIS DOCUMENT MAY BE PUNISHED AS A FELONY UNDER FEDERAL STATUES INCLUDING FEDERAL LAW, TITLE 18, CHAPTER 47 THIS DOCUMENT SHALL NOT BE REPORDUCED, EXCEPT IN FULL, WITHOUT THE WRITTEN CONSENT OF HAYNES INTERNATIONAL, INC.
SPECIFICATION MARKING REQUIREMENTS MAY BE WAIVED ON ORDERS REQUIRING MULTIPLE MATERIAL SPECIFICATIONS.

128

CERTIFICATION OF TESTS • RAPPORT D'ESSAIS CERTIFIE • WERKSZEUGNIS

Sales Order No Reference Commande Bestellungs Nr	Date Entered Date De Commande Bestelldatum	Customer Reference Reference Client Kundenbestdlldaten	Report No. Rapport No Zeugnis Nr	Pages of Pages Page de Pages Anzahl der Seiten
491664001-0	03/21/07	764987G	20070323053	4 Of 4

HAYNES International

CUSTOMER COPY

Haynes International
1020 West Park Avenue
PO Box 9013
Kokomo, Indiana, 46902

Sold To • Client • Bestellaranschrift

SOUTHWEST RESEARCH INSTITUTE
6220 CULEBRA RD
SAN ANTONIO
TX 782280510 USA

Ship To • Destinataire • Bestellmenge

SOUTHWEST RESEARCH INSTITUTE
9503 W COMMERCE
SAN ANTONIO
TX 78277 USA

Product Description • Description Produit • Material Beshreibung

0.750 x 3 x 6

HASTELLOY(R) C-22 (R) ALLOY - PLATE
Nadcap CERTIFICATE NUMBER 0089
S400 9/01/2006, S1000 1/3/2005, EN 10204 3.1, AS9100

Specification • Specification • Spezifikation	Quantity Ordered Quantie Commandee Bestellemenge	Quantity Shipped Quantitie Expediee Liefermenge
ASME-SB-575, 04, UNS# N06022; ASTM-B-574, 06, UNS# N06022	18 PC	18 PC

All tests and inspections have been performed and results meet specification requirements.
THIS MATERIAL IS FREE FROM MERCURY, CADMIUM, RADIUM, AND ALPHA SOURCE CONTAMINATION.
THIS MATERIAL WAS MELTED AND MANUFACTURED IN THE UNITED STATES.
Mill Orders Used: 2744566901 (18 PC)
A) 2000 °F to 2100 °F

Certified By • Certifie Par • Bescheinigt Durch: Tamara Mains 3/23/2007
Certification Technician

THE DATA CONTAINED HEREIN WAS OBTAINED FROM SAMPLES THAT ARE REPRESENTATIVE OF THE PRODUCTS IN THE SUBJECT SHIPMENT. THIS MATERIAL MEETS THE REQUIREMENTS OF THE LISTED SPECIFICATION(S), MODIFIED BY ANY EXCEPTIONS OR PURCHASE ORDER REQUIREMENTS.
THE RECORDING OF FALSE, FICTICIOUS OR FRAUDULENT STATEMENTS OR ENTRIES ON THIS DOCUMENT MAY BE PUNISHED AS A FELONY UNDER FEDERAL STATUES INCLUDING FEDERAL LAW, TITLE 18, CHAPTER 47. THIS DOCUMENT SHALL NOT BE REPORDUCED, EXCEPT IN FULL, WITHOUT THE WRITTEN CONSENT OF HAYNES INTERNATIONAL, INC.
SPECIFICATION MARKING REQUIREMENTS MAY BE WAIVED ON ORDERS REQUIRING MULTIPLE MATERIAL SPECIFICATIONS.

129

CERTIFICATION OF TESTS • RAPPORT D'ESSAIS CERTIFIE • WERKSZEUGNIS

Sales Order No Reference Commande Bestellungs Nr	Date Entered Date De Commande Bestelldatum	Customer Reference Reference Client Kundenbestdldaten	Report No. Rapport No Zeugnis Nr	Pages of Pages Page de Pages Anzahl der Seiten
491664001-0	03/21/07	764987G	20070323053	4 Of 4

CUSTOMER COPY

HAYNES International

Haynes International
1020 West Park Avenue
PO Box 9013
Kokomo, Indiana, 46902

Sold To • Client • Bestellaranschrift

SOUTHWEST RESEARCH INSTITUTE
6220 CULEBRA RD
SAN ANTONIO
TX 782280510 USA

Ship To • Destinataire • Bestellmenge

SOUTHWEST RESEARCH INSTITUTE
9503 W COMMERCE
SAN ANTONIO
TX 78277 USA

Product Description • Description Produit • Material Beshreibung

0.750 x 3 x 6

HASTELLOY(R) C-22 (R) ALLOY - PLATE
Nadcap CERTIFICATE NUMBER 0089
S400 9/01/2006, S1000 1/3/2005, EN 10204 3.1, AS9100

Specification • Specification • Spezifikation	Quantity Ordered Quantie Commandee Bestellemenge	Quantity Shipped Quantitie Expediee Liefermenge
ASME-SB-575, 04, UNS# N06022; ASTM-B-574, 06, UNS# N06022	18 PC	18 PC

All tests and inspections have been performed and results meet specification requirements.
THIS MATERIAL IS FREE FROM MERCURY, CADMIUM, RADIUM, AND ALPHA SOURCE CONTAMINATION.
THIS MATERIAL WAS MELTED AND MANUFACTURED IN THE UNITED STATES.
Mill Orders Used: 2744566901 (18 PC)
A) 2000 °F to 2100 °F

Certified By • Certifie Par • Bescheinigt Durch: Tamara Mains 3/23/2007
Certification Technician

THE DATA CONTAINED HEREIN WAS OBTAINED FROM SAMPLES THAT ARE REPRESENTATIVE OF THE PRODUCTS IN THE SUBJECT SHIPMENT. THIS MATERIAL MEETS THE REQUIREMENTS OF THE LISTED SPECIFICATION(S), MODIFIED BY ANY EXCEPTIONS OR PURCHASE ORDER REQUIREMENTS.
THE RECORDING OF FALSE, FICTICIOUS OR FRAUDULENT STATEMENTS OR ENTRIES ON THIS DOCUMENT MAY BE PUNISHED AS A FELONY UNDER FEDERAL STATUES INCLUDING FEDERAL LAW, TITLE 18, CHAPTER 47. THIS DOCUMENT SHALL NOT BE REPRODUCED, EXCEPT IN FULL, WITHOUT THE WRITTEN CONSENT OF HAYNES INTERNATIONAL, INC.
SPECIFICATION MARKING REQUIREMENTS MAY BE WAIVED ON ORDERS REQUIRING MULTIPLE MATERIAL SPECIFICATIONS.

130

Specimen Machining Documentation Form

Purchase/Work Order Number			
Material Identification		C-22	
Material Heat Number		HT# 2277-6-3120	
CNWRA Requestor		Ken Chiang	
Vendor		Swei Machine Shop	
Specimen Description (CNWRA Drawing Number, ASTM Standard)		Div 18 Drawing K. Aricisak	
To be Completed Prior to Order		**To be Completed upon Receipt of Order**	
Date	4/20/07	**Date**	
Material Supplied to Vendor (Y/N)	Y	**Remaining Stock Material Returned From Vendor (Y/N)**	
Material Marked with Heat Number and Rolling Direction (Y/N)	Y	**Remaining Stock Material Marked with Heat Number and Rolling Direction (Y/N)**	
Dimensions of Material stock provided (L x W x H)	3" x 6" x 0.75" Sent 17 Blocks	**Remaining Stock Material Dimensions (L x W x H)**	
Specimen Quantity Ordered	15	**Specimen Quantity Received**	
Dimensional Inspection Required (Y/N)	Y	**Dimensional Inspection Provided (Y/N)**	
Marked Containment Provided (Y/N)	No	**Marked Containment Used (Y/N)**	
Documented in Scientific Notebook Number/Page Number			
NCR Number (if applicable)			

Signature

4/20/07
Date

REVISIONS			
REV	SHT	DESCRIPTION	DATE
A	.	INITIAL RELEASE	

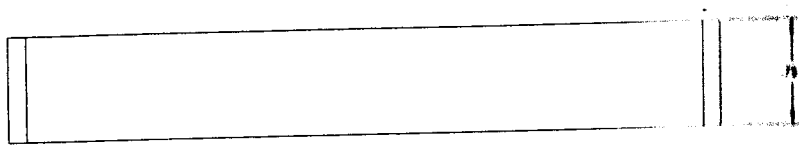

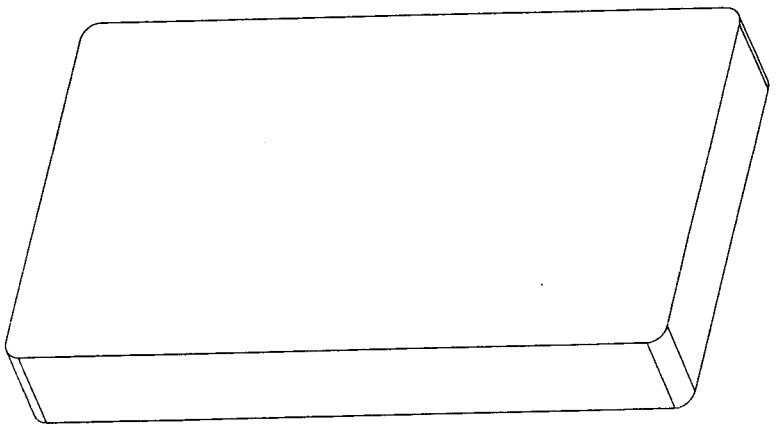

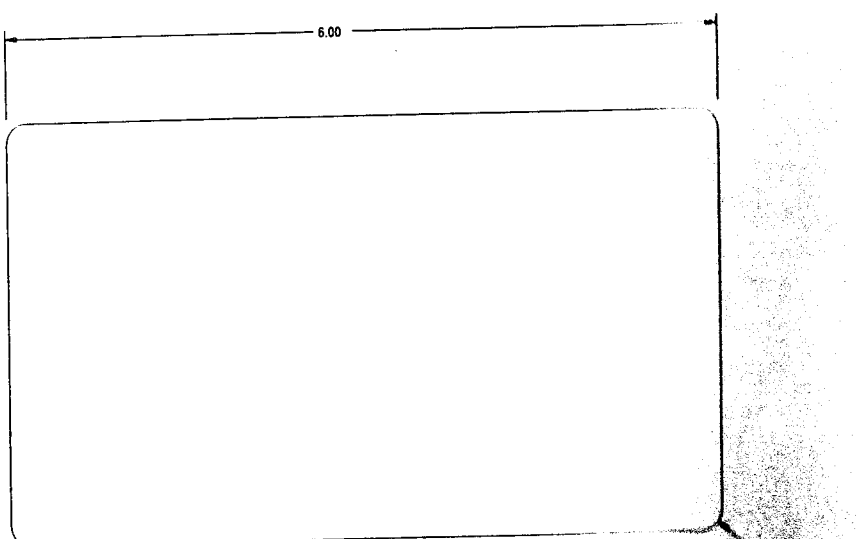

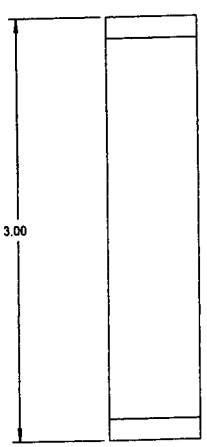

*BREAK AND SMOOTH ALL EDGES

C-22 HT#2277-6-3120

ITEM	QTY	PART NUMBER	DESCRIPTION	MATERIAL/SPECIFICATION/NOTES
1	17		WASTE PACKAGE SPECIMEN	ALLOY-22, FLAT BAR 6"x3"x3/4"

BILL OF MATERIAL/PARTS LIST

DEFAULT TOLERANCES	APPROVAL SIGNATURES
ONE PLACE (X.X) = ± 0.1	DRAWN K. HRICISAK
TWO PLACES (X.XX) = ± 0.01	CHKD D. POMERENING
THREE PLACES (X.XXX) = ± 0.001	APPD K. HRICISAK
FOUR PLACES (X.XXXX) = ± 0.0001	MFG
ANGLES = ± 0.5 DEGREE	DATE 07-Mar-07
SURFACE FINISHES <= 125 MICROINCH RA	FILE WASTE_PACKAGE
THIRD ANGLE PROJECTION	

EXCEPT AS MAY OTHERWISE BE PROVIDED BY CONTRACT, THESE DRAWINGS AND SPECIFICATIONS ARE THE PROPERTY OF SOUTHWEST RESEARCH INSTITUTE, AND SHALL BE KEPT IN STRICT CONFIDENCE, AND SHALL NOT BE REPRODUCED OR COPIED OR USED AS THE BASIS FOR MANUFACTURE OR SALE OF ANY APPARATUS SHOWN THEREON WITHOUT PERMISSION

SOUTHWEST RESEARCH INSTITUTE®
MECHANICAL AND MATERIALS ENGINEERNG DIVISION
6220 CULEBRA ROAD SAN ANTONIO, TX 78238

DRAWING NAME: WASTE_PACKAGE

REV	SIZE	DRAWING NUMBER	REV
D	26401		A

SCALE 1.000 | WEIGHT - 4.234 | SHEET 1 OF 1

DR. - NOT FOR PRODUCTION

Material: Alloy C-22

Sample ID/Heat#: 2277-1-3164

Page numbers: 133 - 134

CENTER FOR NUCLEAR WASTE REGULATORY ANALYSES

SAMPLE CUSTODY/CONTROL LOG ENTRY FORM

SAMPLE IDENTIFICATION (Mandatory) Alloy C-22, 2277-1-3164

SAMPLE DESIGNATION: Alloy C-22, 2277-1-3164

DESCRIPTION OF SAMPLE (Mandatory)

Alloy C-22, 2277-1-3164

REFERENCE TOP OR SCIENTIFIC NOTEBOOK ENTRY

CNWRA 503 page 4-11

AMOUNT OF SAMPLE / SIZE
1 piece: 48" x 24" x 1"

DATE OF SAMPLE RECEIPT (Mandatory) 1/7/2002

DATE OF INITIAL LOG ENTRY (Mandatory) 2/18/2002 **BY** Darrell S. Dunn

SAMPLE STORAGE LOCATION (Mandatory) Building 57

COLLECTION SITE (Reference Maps or Field Notes As Required)

PERSON(S) WHO COLLECTED SAMPLE(S)

Darrell S. Dunn

SUPPLIER Haynes International

OTHER

CNWRA FORM TOP-004

Material: Alloy C-22

Sample ID/Heat#: 2277-1-3113

Page numbers: 135 - 136

CENTER FOR NUCLEAR WASTE REGULATORY ANALYSES TECHNICAL OPERATING PROCEDURE	Proc. TOP-012 Revision 1 Page 9 of 9

SAMPLE CUSTODY ENTRY FORM

SAMPLE IDENTIFICATION (Mandatory) Alloy C22 Heat 2277-1-3113

SAMPLE DESIGNATOR Alloy C22 U Bend Specimens

DESCRIPTION OF SAMPLE (Mandatory)
Single bend specimens, Double bend specimens,
Archive Specimen

REFERENCE TOP or SCIENTIFIC NOTEBOOK ENTRY

Notebook 465

AMOUNT of SAMPLE Single bend specimens – 1/8"x3/4"x5" (20 pcs)
Double bend specimens – 1/8"x3/4"x5.1/8"x3/4"x5.395" (20pcs each) SIZE
Archive Specimen – 1/8"x6"x6" (1PC)

DATE of SAMPLE RECEIPT (Mandatory) 12/14/2001

DATE of LOG ENTRY 12/14/2001 by Yiming Pan

SAMPLE STORAGE LOCATION (Mandatory) Bldg. 57

Collection site:

Supplier: Metal Samples Company

Other:

CNWRA FORM TOP-004

Material: Alloy C-22

Sample ID/Heat#: 2277-2-7542

Page numbers: 137 - 138

CENTER FOR NUCLEAR WASTE REGULATORY ANALYSES

SAMPLE CUSTODY/CONTROL LOG ENTRY FORM

SAMPLE IDENTIFICATION (Mandatory) C-22 2277-2-7542

SAMPLE DESIGNATION ALLOY C-22 2277-2-7542

DESCRIPTION OF SAMPLE (Mandatory)

ALLOY 22 HEAT 2277-2-7542

CATHODE PLATE

REFERENCE TOP OR SCIENTIFIC NOTEBOOK ENTRY

NOTEBOOK 009 Page 106

AMOUNT OF SAMPLE 1 CATHODE PLATE SIZE 2" x 6" x 0.125"

DATE OF SAMPLE RECEIPT (Mandatory) 2/17/1999

DATE OF INITIAL LOG ENTRY (Mandatory) 2/17/1999 BY DARREL DUNN

SAMPLE STORAGE LOCATION (Mandatory)

BLDG 57

COLLECTION SITE (Reference Maps or Field Notes As Required)

PERSON(S) WHO COLLECTED SAMPLE(S)

SUPPLIER METAL SAMPLES

OTHER

CNWRA FORM TOP-004

Material: Alloy C-22

Sample ID/Heat#:
2277-7-3101

Page numbers: 139 - 140

CENTER FOR NUCLEAR WASTE REGULATORY ANALYSES TECHNICAL OPERATING PROCEDURE	Proc. TOP-012 Revision 1 Page 9 of 9

SAMPLE CUSTODY ENTRY FORM

SAMPLE IDENTIFICATION (Mandatory)
ALLOY 22 2277-7-3101

SAMPLE DESIGNATOR ALLOY 22 2277-7-3101

DESCRIPTION OF SAMPLE (Mandatory)
1" THICK ALLOY 22 PLATE
DCB SCC SPECIMENS

REFERENCE TOP or SCIENTIFIC NOTEBOOK ENTRY
NOTEBOOK 009 P 107

AMOUNT of SAMPLE _____ SIZE _____

DATE of SAMPLE RECEIPT (Mandatory) 2/17/99

DATE of LOG ENTRY 2/17/1999 by DARRELL DUNN

SAMPLE STORAGE LOCATION (Mandatory)
BLDG 57

Collection site:

Supplier: METAL SAMPLES

Other: _____

CNWRA FORM TOP-004

Material: Alloy C-22

Sample ID/Heat#: 2277-6-3193

Page numbers: 141 - 142

CENTER FOR NUCLEAR WASTE REGULATORY ANALYSES TECHNICAL OPERATING PROCEDURE	Proc. TOP-012 Revision 1 Page 9 of 9

SAMPLE CUSTODY ENTRY FORM

SAMPLE IDENTIFICATION (Mandatory)
ALLOY C-22 HEAT 2277-6-3193

SAMPLE DESIGNATOR ALLOY 22 HEAT 2277-6-3193

DESCRIPTION OF SAMPLE (Mandatory)
1/2" THICK PLATE IN FORM
OF DCB SCC SPECIMENS

REFERENCE TOP or SCIENTIFIC NOTEBOOK ENTRY
NOTEBOOK 009 P 108

AMOUNT of SAMPLE _____ SIZE _____

DATE of SAMPLE RECEIPT (Mandatory) 2/17/99

DATE of LOG ENTRY 2/17/1999 by DARRELL DUNN

SAMPLE STORAGE LOCATION (Mandatory)
BLDG 57

Collection site:

Supplier: METAL SAMPLES

Other: _____

CNWRA FORM TOP-004

Material: Alloy 22

Sample ID/Heat#:
2277-8-3235/XX1045BG11

Page numbers: 143 - 144

CENTER FOR NUCLEAR WASTE REGULATORY ANALYSES TECHNICAL OPERATING PROCEDURE	Proc. TOP-012 Revision 1 Page 9 of 9

SAMPLE CUSTODY ENTRY FORM

SAMPLE IDENTIFICATION (Mandatory)

WELDED ALLOY 22 BASE ALLOY 2277-8-3235
FILLER XX1045BG11

SAMPLE DESIGNATOR WELDED ALLOY 22 2277-8-3235/XX1045BG11

DESCRIPTION OF SAMPLE (Mandatory)

1/2" PLATE WELDED USING TIG

MACHINED INTO CREVICE REPASSIVATION SPECIMENS

REFERENCE TOP or SCIENTIFIC NOTEBOOK ENTRY

NOTEBOOK 009 P 120-127

AMOUNT of SAMPLE 30 SPECIMENS 1 ARCHIVE PLATE SIZE

DATE of SAMPLE RECEIPT (Mandatory) 2/19/99

DATE of LOG ENTRY 11/10/99 by DARRELL DUNN

SAMPLE STORAGE LOCATION (Mandatory)

BUILDING 57

Collection site:

Supplier: METAL SAMPLES

Other:

CNWRA FORM TOP-004

Material: Alloy 622 Filler

Sample ID/Heat#:
XX2432BG
XX1973BG12
XX1832BG
XX2147BG11
XX1977BG11
WN813

Page numbers: 145 - 151

CENTER FOR NUCLEAR WASTE REGULATORY ANALYSES

SAMPLE CUSTODY/CONTROL LOG ENTRY FORM

SAMPLE IDENTIFICATION (Mandatory) Alloy 622 Filler Wire Heat XX2432BG

SAMPLE DESIGNATION: Alloy 622 Heat XX2432BG

DESCRIPTION OF SAMPLE (Mandatory)

Alloy 622 Filler Wire Heat XX2432BG

REFERENCE TOP OR SCIENTIFIC NOTEBOOK ENTRY

Notebook 503 Page 84

AMOUNT OF SAMPLE / SIZE
10 lbs 3/32" x 36"

DATE OF SAMPLE RECEIPT (Mandatory) January 15, 2003

DATE OF INITIAL LOG ENTRY (Mandatory) 2/19/2003 **BY** Darrell Dunn

SAMPLE STORAGE LOCATION (Mandatory) Building 57

COLLECTION SITE (Reference Maps or Field Notes As Required)

PERSON(S) WHO COLLECTED SAMPLE(S)

Darrell Dunn

SUPPLIER American Filler Metals

OTHER

CNWRA FORM TOP-004

CENTER FOR NUCLEAR WASTE REGULATORY ANALYSES

SAMPLE CUSTODY/CONTROL LOG ENTRY FORM

SAMPLE IDENTIFICATION (Mandatory) Alloy 622 Filler Wire Heat XX1973BG12

SAMPLE DESIGNATION: Alloy 622 Heat XX1973BG12

DESCRIPTION OF SAMPLE (Mandatory)

Alloy 622 Filler Wire Heat XX1973BG12

REFERENCE TOP OR SCIENTIFIC NOTEBOOK ENTRY

Notebook 503 Page 12, 18

AMOUNT OF SAMPLE / SIZE
10 lbs 3/32" x 36"

DATE OF SAMPLE RECEIPT (Mandatory) January 28, 2002

DATE OF INITIAL LOG ENTRY (Mandatory) 2/18/2002 **BY** Darrell Dunn

SAMPLE STORAGE LOCATION (Mandatory) Building 57

COLLECTION SITE (Reference Maps or Field Notes As Required)

PERSON(S) WHO COLLECTED SAMPLE(S)

Darrell Dunn

SUPPLIER American Filler Metals

OTHER

CNWRA FORM TOP-004

CENTER FOR NUCLEAR WASTE REGULATORY ANALYSES

SAMPLE CUSTODY/CONTROL LOG ENTRY FORM

SAMPLE IDENTIFICATION (Mandatory) Alloy 622 Filler Wire Heat XX1832BG

SAMPLE DESIGNATION: Alloy 622 Heat XX1832BG

DESCRIPTION OF SAMPLE (Mandatory)

Alloy 622 Filler Wire Heat XX1832BG

REFERENCE TOP OR SCIENTIFIC NOTEBOOK ENTRY

Notebook 503 Page 13, 17

AMOUNT OF SAMPLE / SIZE
30 lbs 0.045" Diameter

DATE OF SAMPLE RECEIPT (Mandatory) January 28, 2002

DATE OF INITIAL LOG ENTRY (Mandatory) 2/18/2002 **BY** Darrell Dunn

SAMPLE STORAGE LOCATION (Mandatory) Building 57

COLLECTION SITE (Reference Maps or Field Notes As Required)

PERSON(S) WHO COLLECTED SAMPLE(S)

Darrell Dunn

SUPPLIER American Filler Metals

OTHER

CNWRA FORM TOP-004

CENTER FOR NUCLEAR WASTE REGULATORY ANALYSES

SAMPLE CUSTODY/CONTROL LOG ENTRY FORM

SAMPLE IDENTIFICATION (Mandatory) Alloy 622 Filler Wire Heat XX2147BG11

SAMPLE DESIGNATION: Alloy 622 Heat XX2147BG11

DESCRIPTION OF SAMPLE (Mandatory)

Alloy 622 Filler Wire Heat XX2147BG11

REFERENCE TOP OR SCIENTIFIC NOTEBOOK ENTRY

Notebook 503 Page 14, 19

AMOUNT OF SAMPLE / SIZE
20 lbs 0.125" x 36"

DATE OF SAMPLE RECEIPT (Mandatory) January 28, 2002

DATE OF INITIAL LOG ENTRY (Mandatory) 2/18/2002 **BY** Darrell Dunn

SAMPLE STORAGE LOCATION (Mandatory) Building 57

COLLECTION SITE (Reference Maps or Field Notes As Required)

PERSON(S) WHO COLLECTED SAMPLE(S)

Darrell Dunn

SUPPLIER American Filler Metals

OTHER

CNWRA FORM TOP-004

CENTER FOR NUCLEAR WASTE REGULATORY ANALYSES

SAMPLE CUSTODY/CONTROL LOG ENTRY FORM

SAMPLE IDENTIFICATION (Mandatory) Alloy 622 Filler Wire Heat XX1977BG11

SAMPLE DESIGNATION: Alloy 622 Heat XX1977BG11

DESCRIPTION OF SAMPLE (Mandatory)

Alloy 622 Filler Wire Heat XX1977BG11

REFERENCE TOP OR SCIENTIFIC NOTEBOOK ENTRY

Notebook 503 Page 84

AMOUNT OF SAMPLE / SIZE
30 lbs 0.045" Diameter

DATE OF SAMPLE RECEIPT (Mandatory) January 15, 2003

DATE OF INITIAL LOG ENTRY (Mandatory) 2/19/2003 **BY** Darrell Dunn

SAMPLE STORAGE LOCATION (Mandatory) Building 57

COLLECTION SITE (Reference Maps or Field Notes As Required)

PERSON(S) WHO COLLECTED SAMPLE(S)

Darrell Dunn

SUPPLIER American Filler Metals

OTHER

CNWRA FORM TOP-004

CENTER FOR NUCLEAR WASTE REGULATORY ANALYSES

SAMPLE CUSTODY/CONTROL LOG ENTRY FORM

SAMPLE IDENTIFICATION (Mandatory) Alloy 622 Filler Wire Heat WN813

SAMPLE DESIGNATION: Alloy 622 Heat WN813

DESCRIPTION OF SAMPLE (Mandatory)

Alloy 622 Filler Wire Heat WN813

REFERENCE TOP OR SCIENTIFIC NOTEBOOK ENTRY

Notebook 579 Page 38 and 42

AMOUNT OF SAMPLE / SIZE
20 lbs 3/32" x 36"

DATE OF SAMPLE RECEIPT (Mandatory) June 2, 2003

DATE OF INITIAL LOG ENTRY (Mandatory) 7/22/2003 **BY** Darrell Dunn

SAMPLE STORAGE LOCATION (Mandatory) Building 57

COLLECTION SITE (Reference Maps or Field Notes As Required)

PERSON(S) WHO COLLECTED SAMPLE(S)

Darrell Dunn

SUPPLIER TechAlloy

OTHER

CNWRA FORM TOP-004

Material: Offenhauser GTAW C22

Sample ID/Heat#:
2277-1-3164
XX2432BG

Page numbers: 152 - 153

CENTER FOR NUCLEAR WASTE REGULATORY ANALYSES

SAMPLE CUSTODY/CONTROL LOG ENTRY FORM

SAMPLE IDENTIFICATION (Mandatory) Offenhauser GTAW C-22

SAMPLE DESIGNATION: Offenhauser GTAW C-22 Base: 2277-1-3164 Filler: XX2432BG

DESCRIPTION OF SAMPLE (Mandatory)

Base metal C-22 heat 2277-1-3164 1 inch thick

Filler metal Alloy 622 Heat XX2432BG

REFERENCE TOP OR SCIENTIFIC NOTEBOOK ENTRY

Notebook 579 Page 52

AMOUNT OF SAMPLE / SIZE
1 piece: 6" x 24" x 1"

DATE OF SAMPLE RECEIPT (Mandatory) 7/23/2003

DATE OF INITIAL LOG ENTRY (Mandatory) 8/8/2003 **BY** Darrell Dunn

SAMPLE STORAGE LOCATION (Mandatory) Building 57

COLLECTION SITE (Reference Maps or Field Notes As Required)

PERSON(S) WHO COLLECTED SAMPLE(S)

Darrell Dunn

SUPPLIER Offenhauser

OTHER NCR 2005-20 Lack of fusion

CNWRA FORM TOP-004

Material: ROBEN Welded C-22

Sample ID/Heat#:
2277-1-3164

Page numbers: 154 - 167

ENTER FOR NUCLEAR WASTE REGULATORY ANALYSES TECHNICAL OPERATING PROCEDURE	Proc. TOP-012 Revision 2 Change 0 Page 6 of 6

CENTER FOR NUCLEAR WASTE REGULATORY ANALYSES

SAMPLE CUSTODY/CONTROL LOG ENTRY FORM

SAMPLE IDENTIFICATION (Mandatory) CNWRA-1 GTAW

DESCRIPTION OF SAMPLE (Mandatory) ALLOY 22 HEAT 2277-1-3164
ER NiCrMo-10 FILLER HEAT WN813
WPS 43-7-0

REFERENCE TOP OR SCIENTIFIC NOTEBOOK ENTRY NB 579 P76

AMOUNT OF SAMPLE 1 PLATE SIZE 6" x 24" x 1"

DATE OF SAMPLE RECEIPT (Mandatory) 1/23/04

DATE OF INITIAL LOG ENTRY (Mandatory) 1/29/04 BY DARRELL DUNN

SAMPLE STORAGE LOCATION (Mandatory) BLDG 57

COLLECTION SITE (Reference Maps or Field Notes As Required)

PERSON(S) WHO COLLECTED SAMPLE(S)
DARRELL DUNN

SUPPLIER ROBEN

OTHER WELDED BY ROBEN MANUFACTURING
LAKEWOOD NJ

CNWRA FORM TOP-004

Attachment A

ENTER FOR NUCLEAR WASTE REGULATORY ANALYSES TECHNICAL OPERATING PROCEDURE	Proc. TOP-012 Revision 2 Change 0 Page 6 of 6

CENTER FOR NUCLEAR WASTE REGULATORY ANALYSES

SAMPLE CUSTODY/CONTROL LOG ENTRY FORM

SAMPLE IDENTIFICATION (Mandatory) CNWRA-2 GTAW/GMAW

DESCRIPTION OF SAMPLE (Mandatory) ALLOY C-22 HEAT 2277-1-3164

ERNiCrMo-10 FILLER HEAT WN 813

ERNiCrMo-10 FILLER HEAT XX 1977DG11

REFERENCE TOP OR SCIENTIFIC NOTEBOOK ENTRY

NOTEBOOK 579 PAGE 76

AMOUNT OF SAMPLE 1 PLATE SIZE 6" x 24" x 1"

DATE OF SAMPLE RECEIPT (Mandatory) 1/23/04

DATE OF INITIAL LOG ENTRY (Mandatory) 1/29/04 BY DARRELL DUNN

SAMPLE STORAGE LOCATION (Mandatory) BLDG 57

COLLECTION SITE (Reference Maps or Field Notes As Required)

PERSON(S) WHO COLLECTED SAMPLE(S)

DARRELL DUNN

SUPPLIER ROBEN

OTHER WELDED BY ROBEN MANUFACTURING

LAKEWOOD NJ WPS 43-7-0 43-3-0

CNWRA FORM TOP-004

Attachment A

ENTER FOR NUCLEAR WASTE REGULATORY ANALYSES TECHNICAL OPERATING PROCEDURE	Proc. TOP-012 Revision 2 Change 0 Page 6 of 6

CENTER FOR NUCLEAR WASTE REGULATORY ANALYSES

SAMPLE CUSTODY/CONTROL LOG ENTRY FORM

SAMPLE IDENTIFICATION (Mandatory) CNWRA-3 GTAW

DESCRIPTION OF SAMPLE (Mandatory) ALLOY C22 HEAT 2277-3-3292

ERNiCrMo-10 FILLER WN 813

REFERENCE TOP OR SCIENTIFIC NOTEBOOK ENTRY NB 636 P 25

AMOUNT OF SAMPLE 1 PLATE SIZE 6"x24"x1"

DATE OF SAMPLE RECEIPT (Mandatory) 5/17/04

DATE OF INITIAL LOG ENTRY (Mandatory) 5/28/04 BY DARRELL DUNN

SAMPLE STORAGE LOCATION (Mandatory) BLDG 57

COLLECTION SITE (Reference Maps or Field Notes As Required)

PERSON(S) WHO COLLECTED SAMPLE(S)

DARRELL DUNN

SUPPLIER ROBEN

OTHER WELDED BY ROBEN MANUFACTURING

OAKWOOD NJ WPS 43-7-0

CNWRA FORM TOP-004

Attachment A

ENTER FOR NUCLEAR WASTE REGULATORY ANALYSES TECHNICAL OPERATING PROCEDURE	Proc. TOP-012 Revision 2 Change 0 Page 6 of 6

CENTER FOR NUCLEAR WASTE REGULATORY ANALYSES

SAMPLE CUSTODY/CONTROL LOG ENTRY FORM

SAMPLE IDENTIFICATION (Mandatory) CNWRA-4 GTAW

DESCRIPTION OF SAMPLE (Mandatory) ALLOY C22 HEAT 2277-3-3292
ER NiCrMo-10 FILLER WN 813

REFERENCE TOP OR SCIENTIFIC NOTEBOOK ENTRY NB 636 ~~P25~~ PAGE 25 DD 5/28/04

AMOUNT OF SAMPLE 1 PLATE SIZE 6" x 24" x 1"

DATE OF SAMPLE RECEIPT (Mandatory) 5/17/04

DATE OF INITIAL LOG ENTRY (Mandatory) 5/28/04 BY DARRELL DUNN

SAMPLE STORAGE LOCATION (Mandatory) BLDG 57

COLLECTION SITE (Reference Maps or Field Notes As Required)

PERSON(S) WHO COLLECTED SAMPLE(S)
DARRELL DUNN

SUPPLIER ROBEN

OTHER WELDED BY ROBEN MANUFACTURING
LAKEWOOD NJ WPS 43-7-0

CNWRA FORM TOP-004

Attachment A

ENTER FOR NUCLEAR WASTE REGULATORY ANALYSES TECHNICAL OPERATING PROCEDURE	Proc. TOP-012 Revision 2 Change 0 Page 6 of 6

CENTER FOR NUCLEAR WASTE REGULATORY ANALYSES

SAMPLE CUSTODY/CONTROL LOG ENTRY FORM

SAMPLE IDENTIFICATION (Mandatory) CNWRA-5 GMAW

DESCRIPTION OF SAMPLE (Mandatory) ALLOY C22 HEAT 2277-3-3292
ER NiCrMo-10 HEAT WN 813 FILLER
ER NiCrMo-10 HEAT XX1977 BG 11 FILLER

REFERENCE TOP OR SCIENTIFIC NOTEBOOK ENTRY
NOTEBOOK 636 P. 25

AMOUNT OF SAMPLE 1 PLATE SIZE 6" x 24" x 1"

DATE OF SAMPLE RECEIPT (Mandatory) 5/17/04

DATE OF INITIAL LOG ENTRY (Mandatory) 5/25/04 BY DARREL DUNN

SAMPLE STORAGE LOCATION (Mandatory) BLDG 57

COLLECTION SITE (Reference Maps or Field Notes As Required)

PERSON(S) WHO COLLECTED SAMPLE(S)
DARREL DUNN

SUPPLIER ROBEN

OTHER WELDED BY ROBEN MANUFACTURING
LAKEWOOD NJ WPS 43-7-0 & 43-3-0
GTAW ROOT GMAW FILL NCR 2004-07
LACK OF FUSION

CNWRA FORM TOP-004

Attachment A

ENTER FOR NUCLEAR WASTE REGULATORY ANALYSES TECHNICAL OPERATING PROCEDURE	Proc. TOP-012 Revision 2 Change 0 Page 6 of 6

CENTER FOR NUCLEAR WASTE REGULATORY ANALYSES

SAMPLE CUSTODY/CONTROL LOG ENTRY FORM

SAMPLE IDENTIFICATION (Mandatory) CNWRA-6 GMAW

DESCRIPTION OF SAMPLE (Mandatory) ALLOY C22 HEAT 2277-3-3292

ER NiCrMo-10 HEAT WN 813 FILLER

ER NiCrMo-10 HEAT XX1977 BG 11 FILLER

REFERENCE TOP OR SCIENTIFIC NOTEBOOK ENTRY

NOTEBOOK 636 P. 25

AMOUNT OF SAMPLE 1 PLATE SIZE 6"x24"x1"

DATE OF SAMPLE RECEIPT (Mandatory) 5/17/04

DATE OF INITIAL LOG ENTRY (Mandatory) 5/28/04 BY DARRELL DUNN

SAMPLE STORAGE LOCATION (Mandatory) BLDG 57

COLLECTION SITE (Reference Maps or Field Notes As Required)

PERSON(S) WHO COLLECTED SAMPLE(S)

DARRELL DUNN

SUPPLIER ROBEN

OTHER WELDED BY ROBEN MANUFACTURING

LAKEWOOD NJ WPS 43-7-0 & 43-3-0

GTAW ROOT GMAW FILL

CNWRA FORM TOP-004

Attachment A

Specimen Machining Documentation Form

Purchase/Work Order Number		511678A	
Material Identification		CNWRA-3 GTAW	
Material Heat Number		Alloy C22, HT # 2277-3-3292 (Base) ~~HT # WN 813 (Filler)~~	
CNWRA Requestor		Lietai Yang	
Vendor		Texas Toolmakers	
Specimen Description (CNWRA Drawing Number, ASTM Standard)		Specimen for MIC testing Drawing 20.06002.01.322.05	
To be Completed Prior to Order		**To be Completed upon Receipt of Order**	
Date	06/07/2005	**Date**	
Material Supplied to Vendor (Y/N)	Y	**Remaining Stock Material Returned From Vendor (Y/N)**	Y
Material Marked with Heat Number and Rolling Direction (Y/N)	Y	**Remaining Stock Material Marked with Heat Number and Rolling Direction (Y/N)**	Y
Dimensions of Material stock provided (L x W x H)	6" x 24" x 1" with 12 cut out holes.	**Remaining Stock Material Dimensions (L x W x H)**	6" x 24" x 1" with 13 cut-out holes
Specimen Quantity Ordered	30	**Specimen Quantity Received**	30
Dimensional Inspection Required (Y/N)	Y	**Dimensional Inspection Provided (Y/N)**	Y
Marked Containment Provided (Y/N)	Y	**Marked Containment Used (Y/N)**	Y
Documented in Scientific Notebook Number/Page Number SN # 675, Pages 128-129, 137-139.			
NCR Number (if applicable)			

L. Yang 6/07/2005
Signature Date

L. Yang 7/5/05

CENTER FOR NUCLEAR WASTE REGULATORY ANALYSES

SAMPLE CUSTODY/CONTROL LOG ENTRY FORM

SAMPLE IDENTIFICATION (Mandatory) CNWRA-3 GTAW - Flat specimen

SAMPLE DESIGNATION MIC Test

DESCRIPTION OF SAMPLE (Mandatory) Flat specimen machined from Alloy C-22 Heat# 2277-3-3292 Filler Heat # WN 813

REFERENCE TOP OR SCIENTIFIC NOTEBOOK ENTRY NB 675, P 128-129 P 137-139

AMOUNT OF SAMPLE 30 SIZE 1" X 0.5" X 0.06"

DATE OF SAMPLE RECEIPT (Mandatory) 7/1/05

DATE OF INITIAL LOG ENTRY (Mandatory) 7/5/05 BY Lietai Yang

SAMPLE STORAGE LOCATION (Mandatory) Blg. 57

COLLECTION SITE (Reference Maps or Field Notes As Required)

PERSON(S) WHO COLLECTED SAMPLE(S)

Lietai Yang

SUPPLIER Texas Tool makers

OTHER

CNWRA FORM TOP-004

Specimen Machining Documentation Form

Purchase/Work Order Number		05027848	
Material Identification		Alloy 22 welded plate GTAW	
Material Heat Number		Alloy C22 Heat # 2277-3-3292 Filler metal Heat # WN813	
CNWRA Requestor		Xi'hua He	
Vendor		Texas Toolmakers	
Specimen Description (CNWRA Drawing Number, ASTM Standard)		CNWRA drawing # 20-06002-01-322-002 20-06002-01-322-003 20-06002-01-322-004	
To be Completed Prior to Order		**To be Completed upon Receipt of Order**	
Date	7/12/2005	**Date**	7/20/05
Material Supplied to Vendor (Y/N)	Y	**Remaining Stock Material Returned From Vendor (Y/N)**	Y
Material Marked with Heat Number and Rolling Direction (Y/N)	Y	**Remaining Stock Material Marked with Heat Number and Rolling Direction (Y/N)**	Y
Dimensions of Material stock provided (L x W x H)	6"x24"x1" with 13 cut-out holes	**Remaining Stock Material Dimensions (L x W x H)**	6"x24"x1" with 17 cut-out holes
Specimen Quantity Ordered	10	**Specimen Quantity Received**	10
Dimensional Inspection Required (Y/N)	Y	**Dimensional Inspection Provided (Y/N)**	10
Marked Containment Provided (Y/N)	Y	**Marked Containment Used (Y/N)**	10
Documented in Scientific Notebook Number/Page Number 729/21			
NCR Number (if applicable)			

[illegible] 7/20/05

Signature Date

Specimen Machining Documentation Form

Purchase/Work Order Number			
Material Identification		Alloy 22 Welded plate GTAW	
Material Heat Number		Alloy 22 Heat # 2277-3-3292 Filler metal Heat # WN813	
CNWRA Requestor		Xihua He	
Vendor		Texas Toolmakers	
Specimen Description (CNWRA Drawing Number, ASTM Standard)		CNWRA drawing # 20-06002-01-322-002 20-06002-01-322-003 20-06002-01-322-004	
To be Completed Prior to Order		**To be Completed upon Receipt of Order**	
Date	1/5/2006	**Date**	1/17/06
Material Supplied to Vendor (Y/N)	Y	**Remaining Stock Material Returned From Vendor (Y/N)**	Y
Material Marked with Heat Number and Rolling Direction (Y/N)	Y	**Remaining Stock Material Marked with Heat Number and Rolling Direction (Y/N)**	Y
Dimensions of Material stock provided (L x W x H)	6"x24"x1" with 17 cut-out holes	**Remaining Stock Material Dimensions (L x W x H)**	6"x24"x1" with 21 cut-out holes
Specimen Quantity Ordered	12	**Specimen Quantity Received**	12
Dimensional Inspection Required (Y/N)	Y	**Dimensional Inspection Provided (Y/N)**	Y
Marked Containment Provided (Y/N)	Y	**Marked Containment Used (Y/N)**	Y
Documented in Scientific Notebook Number/Page Number 744/88			
NCR Number (if applicable)			

He Xu 1/17/06

Signature Date

Specimen Machining Documentation Form

Purchase/Work Order Number		656595D Line #1	
Material Identification		Alloy-22 CNWRA-3 GTAW	
Material Heat Number		HT #2277-3-3292 (Base) HT# WN 813 (Filler)	
CNWRA Requestor		Lietai Yang	
Vendor		Texas Toolmakers	
Specimen Description (CNWRA Drawing Number, ASTM Standard)		Flat specimen Drawing # 20.06002.01.322.18	
To be Completed Prior to Order		**To be Completed upon Receipt of Order**	
Date	~~06~~ L.Y. 02/10/06 02/13/06	**Date**	3/9/06
Material Supplied to Vendor (Y/N)	Y	**Remaining Stock Material Returned From Vendor (Y/N)**	Y
Material Marked with Heat Number and Rolling Direction (Y/N)	Y	**Remaining Stock Material Marked with Heat Number and Rolling Direction (Y/N)**	Y
Dimensions of Material stock provided (L x W x H)	6"x24"x1" with 20 cut-out holes	**Remaining Stock Material Dimensions (L x W x H)**	6x24x1 Almost All web Region Cut out
Specimen Quantity Ordered	50	**Specimen Quantity Received**	50
Dimensional Inspection Required (Y/N)	Y	**Dimensional Inspection Provided (Y/N)**	Y
Marked Containment Provided (Y/N)	Y	**Marked Containment Used (Y/N)**	Y
Documented in Scientific Notebook Number/Page Number	No. 737/62-63, 75-77		
NCR Number (if applicable)			

L. Yang 02/10/06

Signature Date

Lietai Yang
Southwest Research Institute
Building 57
6220 Culebra Rd
San Antonio, TX 78238
210-522-2483
210-522-5184 - fax
E-mail LTyang@swri.org

Flat Specimen

CNWRA Drawing # 20.06002.01.322.18

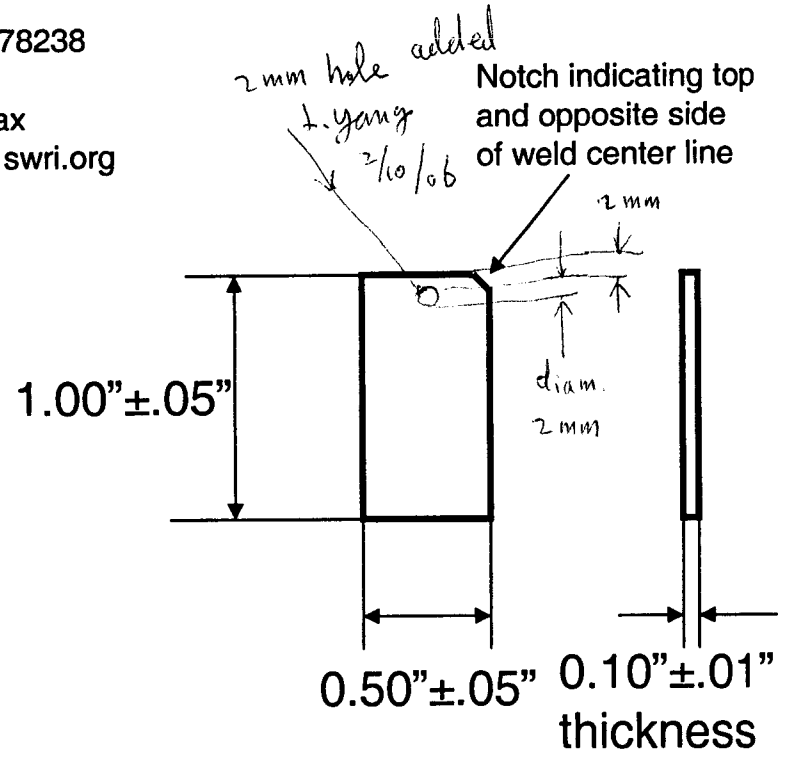

C-22 Alloy 22, CNWRA-3 GTAW

Material: C-22 Alloy (WELDED)
Heat #: 2277-3-3292 (Base) L.Y. 2/10/06
Specimen WN 813 (Filler)
Orientation: See drawing below; must identify which side of the specimen was in the center line of the weld and which side was the top surface of the 1"-thick plate
Quantity : 50
Polish: 600 grit
Others: _____

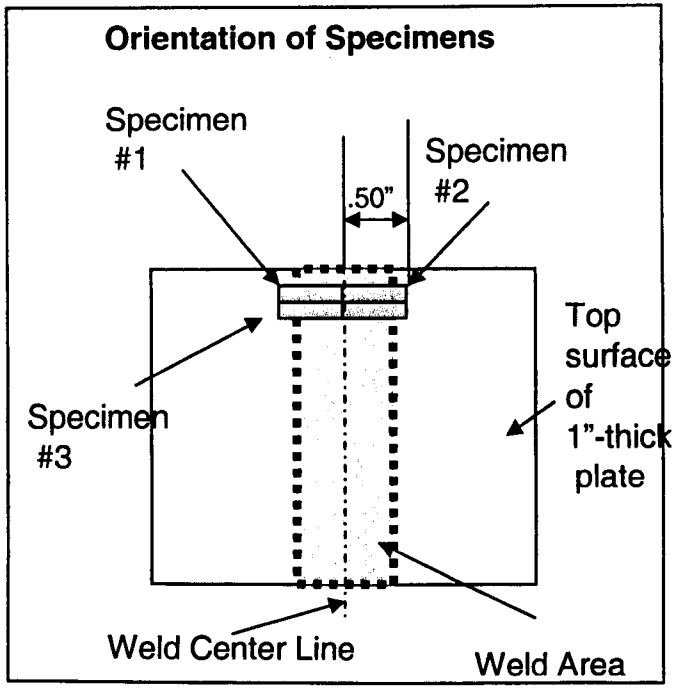

L. Yang 2/7/2006
Initiated by L. Yang Date

V. Jain 2/7/2006
Reviewed by V. Jain Date

R. Brient 2/7/2006
QA Approval by R. Brient Date

166

Specimen Machining Documentation Form

Purchase/Work Order Number			
Material Identification		Alloy 22 welded plate GTAW	
Material Heat Number		Alloy 22 Heat # 2277-3-3292 Filler metal Heat # WN813	
CNWRA Requestor		Xihua He	
Vendor		Texas toolmakers	
Specimen Description (CNWRA Drawing Number, ASTM Standard)		Crevice specimen Drawing # 20.06002.01 32F 002, -003, -004	
To be Completed Prior to Order		**To be Completed upon Receipt of Order**	
Date	5/30/06	**Date**	6/16/06
Material Supplied to Vendor (Y/N)	Y	**Remaining Stock Material Returned From Vendor (Y/N)**	Y
Material Marked with Heat Number and Rolling Direction (Y/N)	Y	**Remaining Stock Material Marked with Heat Number and Rolling Direction (Y/N)**	Y
Dimensions of Material stock provided (L x W x H)	6"x24"x1" only 1" long left in existing weld	**Remaining Stock Material Dimensions (L x W x H)**	6"x24"x1" with cut holes in welded region
Specimen Quantity Ordered	3	**Specimen Quantity Received**	3
Dimensional Inspection Required (Y/N)	Y	**Dimensional Inspection Provided (Y/N)**	Y
Marked Containment Provided (Y/N)	Y	**Marked Containment Used (Y/N)**	Y
Documented in Scientific Notebook Number/Page Number Submitted for QA record			
NCR Number (if applicable)			

He [signature] 6/16/06

Signature Date

Material: A516 Coupon (Metal Samples Coupon), 316l SS (Metal Samples Coupon), C22 (Metal Samples Coupon), C22 wire, 316 SS wire, Zr-4 wire, Ti Grade 7 wire

Page numbers: 168 - 176

CENTER FOR NUCLEAR WASTE REGULATORY ANALYSES TECHNICAL OPERATING PROCEDURE	Proc. TOP-012 Revision 1 Page 9 of 9

SAMPLE CUSTODY ENTRY FORM

SAMPLE IDENTIFICATION (Mandatory)

A516 Coupon

SAMPLE DESIGNATOR Metal Samples Coupon # MS F215

DESCRIPTION OF SAMPLE (Mandatory)

flat coupon, some w/ autogenous weld

REFERENCE TOP or SCIENTIFIC NOTEBOOK ENTRY

S N 368

AMOUNT of SAMPLE _____ SIZE _____

DATE of SAMPLE RECEIPT (Mandatory) 1/7/00

DATE of LOG ENTRY 6/19/00 by SB

SAMPLE STORAGE LOCATION (Mandatory)

B57

Collection site:

Supplier:

Other:

CNWRA FORM TOP-004

CENTER FOR NUCLEAR WASTE REGULATORY ANALYSES TECHNICAL OPERATING PROCEDURE	Proc. TOP-012 Revision 1 Page 9 of 9

SAMPLE CUSTODY ENTRY FORM

SAMPLE IDENTIFICATION (Mandatory)
316L SS Coupon

SAMPLE DESIGNATOR Metal Samples Coupon # MSJP770

DESCRIPTION OF SAMPLE (Mandatory)
flat coupon, some w/ autogenous weld

REFERENCE TOP or SCIENTIFIC NOTEBOOK ENTRY

SN 368

AMOUNT of SAMPLE _____ SIZE _____

DATE of SAMPLE RECEIPT (Mandatory) 1/7/00

DATE of LOG ENTRY 6/19/00 by SB

SAMPLE STORAGE LOCATION (Mandatory)
B57

Collection site:

Supplier:

Other: _____

CNWRA FORM TOP-004

CENTER FOR NUCLEAR WASTE REGULATORY ANALYSES TECHNICAL OPERATING PROCEDURE	Proc. TOP-012 Revision 1 Page 9 of 9

SAMPLE CUSTODY ENTRY FORM

SAMPLE IDENTIFICATION (Mandatory)

316L SS Coupon

SAMPLE DESIGNATOR Metal Samples Coupon # MS JP012

DESCRIPTION OF SAMPLE (Mandatory)

flat coupon

REFERENCE TOP or SCIENTIFIC NOTEBOOK ENTRY

SN 368

AMOUNT of SAMPLE _____ SIZE _____

DATE of SAMPLE RECEIPT (Mandatory) 1/2/00

DATE of LOG ENTRY 6/19/00 by SB

SAMPLE STORAGE LOCATION (Mandatory)

B57

Collection site:

Supplier:

Other: _____

CNWRA FORM TOP-004

172

CENTER FOR NUCLEAR WASTE REGULATORY ANALYSES TECHNICAL OPERATING PROCEDURE	Proc. TOP-012 Revision 1 Page 9 of 9

SAMPLE CUSTODY ENTRY FORM

SAMPLE IDENTIFICATION (Mandatory)

C22 Coupon

SAMPLE DESIGNATOR Metal Sample Coupon a MS J351

DESCRIPTION OF SAMPLE (Mandatory)

flat coupons, some w/ autogenous weld

REFERENCE TOP or SCIENTIFIC NOTEBOOK ENTRY

SN 318

AMOUNT of SAMPLE _____ SIZE _____

DATE of SAMPLE RECEIPT (Mandatory) 1/2/00

DATE of LOG ENTRY 6/19/00 by SB

SAMPLE STORAGE LOCATION (Mandatory)

B57

Collection site:

Supplier:

Other: _____

CNWRA FORM TOP-004

CENTER FOR NUCLEAR WASTE REGULATORY ANALYSES TECHNICAL OPERATING PROCEDURE	Proc. TOP-012 Revision 1 Page 9 of 9

SAMPLE CUSTODY ENTRY FORM

SAMPLE IDENTIFICATION (Mandatory)
C-22 wire

SAMPLE DESIGNATOR C22 wire MS # H157

DESCRIPTION OF SAMPLE (Mandatory)
0.04 x 12" wire

REFERENCE TOP or SCIENTIFIC NOTEBOOK ENTRY
SN 368

AMOUNT of SAMPLE _____ SIZE _____

DATE of SAMPLE RECEIPT (Mandatory) 1/2/00

DATE of LOG ENTRY 6/12/00 by SB

SAMPLE STORAGE LOCATION (Mandatory)
B57

Collection site:

Supplier:

Other: _____

CNWRA FORM TOP-004

CENTER FOR NUCLEAR WASTE REGULATORY ANALYSES TECHNICAL OPERATING PROCEDURE	Proc. TOP-012 Revision 1 Page 9 of 9

SAMPLE CUSTODY ENTRY FORM

SAMPLE IDENTIFICATION (Mandatory)

316L SS wire

SAMPLE DESIGNATOR 316L wire ms #1 H405

DESCRIPTION OF SAMPLE (Mandatory)

0.04 x 12" wire

REFERENCE TOP or SCIENTIFIC NOTEBOOK ENTRY

SN 318

AMOUNT of SAMPLE _____ SIZE _____

DATE of SAMPLE RECEIPT (Mandatory) 1/7/00

DATE of LOG ENTRY 6/19/2020 by SB

SAMPLE STORAGE LOCATION (Mandatory)

B57

Collection site:

Supplier:

Other: _____

CNWRA FORM TOP-004

CENTER FOR NUCLEAR WASTE REGULATORY ANALYSES TECHNICAL OPERATING PROCEDURE	Proc. TOP-012 Revision 1 Page 9 of 9

SAMPLE CUSTODY ENTRY FORM

SAMPLE IDENTIFICATION (Mandatory)

Zr-4 wire

SAMPLE DESIGNATOR Zr 4 wire ms #D830

DESCRIPTION OF SAMPLE (Mandatory)

0.04" x 12" wire

REFERENCE TOP or SCIENTIFIC NOTEBOOK ENTRY

SN 368

AMOUNT of SAMPLE _____ SIZE _____

DATE of SAMPLE RECEIPT (Mandatory) 1/7/00

DATE of LOG ENTRY 6/12/00 by SB

SAMPLE STORAGE LOCATION (Mandatory)

B57

Collection site:

Supplier:

Other: _____

CNWRA FORM TOP-004

CENTER FOR NUCLEAR WASTE REGULATORY ANALYSES TECHNICAL OPERATING PROCEDURE	Proc. TOP-012 Revision 1 Page 9 of 9

SAMPLE CUSTODY ENTRY FORM

SAMPLE IDENTIFICATION (Mandatory)

Ti Gr 7 Wire

SAMPLE DESIGNATOR Ti Gr 7 Wire MS # P914

DESCRIPTION OF SAMPLE (Mandatory)

0.04" x 12" wire

REFERENCE TOP or SCIENTIFIC NOTEBOOK ENTRY

SN 368

AMOUNT of SAMPLE _____ SIZE _____

DATE of SAMPLE RECEIPT (Mandatory) 1/7/00

DATE of LOG ENTRY 6/19/00 by SB

SAMPLE STORAGE LOCATION (Mandatory)

B57

Collection site:

Supplier:

Other:

CNWRA FORM TOP-004

Material: Josephinite

Sample ID/Heat#:
77-13 / 77-14
EN 6502-3-0981
JS-JB1
JS-JB2

Page numbers: 177 - 181

ENTER FOR NUCLEAR WASTE REGULATORY ANALYSES TECHNICAL OPERATING PROCEDURE	Proc. TOP-012 Revision 2 Change 0 Page 6 of 6

CENTER FOR NUCLEAR WASTE REGULATORY ANALYSES

SAMPLE CUSTODY/CONTROL LOG ENTRY FORM

SAMPLE IDENTIFICATION (Mandatory) Josephinite 77-13 and 77-14

DESCRIPTION OF SAMPLE (Mandatory) 2 Josephinite pebbles

REFERENCE TOP OR SCIENTIFIC NOTEBOOK ENTRY

AMOUNT OF SAMPLE 2 samples SIZE ~ 2 x 1 1/2 in

DATE OF SAMPLE RECEIPT (Mandatory) 7/11/2003

DATE OF INITIAL LOG ENTRY (Mandatory) 7/11/2003 BY Gustavo Cragnolino

SAMPLE STORAGE LOCATION (Mandatory) Bldg 57

COLLECTION SITE (Reference Maps or Field Notes As Required)

Josephine Creek, Oregon near to Cotters Cabin. Collected in 1977

PERSON(S) WHO COLLECTED SAMPLE(S) Prof. John Bird - Cornell University

SUPPLIER same

OTHER

CNWRA FORM TOP-004

Attachment A

ENTER FOR NUCLEAR WASTE REGULATORY ANALYSES TECHNICAL OPERATING PROCEDURE	Proc. TOP-012 Revision 2 Change 0 Page 6 of 6

CENTER FOR NUCLEAR WASTE REGULATORY ANALYSES

SAMPLE CUSTODY/CONTROL LOG ENTRY FORM

SAMPLE IDENTIFICATION (Mandatory) EN 6502-3-0981

DESCRIPTION OF SAMPLE (Mandatory) Vacuum melting cast of Ni-24% Fe alloy

REFERENCE TOP OR SCIENTIFIC NOTEBOOK ENTRY Scientif Notebook 539, Chemical Analysis in p. 28.

AMOUNT OF SAMPLE Plate 3/4 in thick SIZE 6x3 in

DATE OF SAMPLE RECEIPT (Mandatory) 1/24/2003

DATE OF INITIAL LOG ENTRY (Mandatory) 2/12/03 BY Roger Dykstra

SAMPLE STORAGE LOCATION (Mandatory) Bldg 57

COLLECTION SITE (Reference Maps or Field Notes As Required)

Supplied by HAYNES INTERNATIONAL which melted and cast the alloy plate

PERSON(S) WHO COLLECTED SAMPLE(S)

SUPPLIER HAYNES INTERNATIONAL

OTHER

CNWRA FORM TOP-004

Attachment A

ENTER FOR NUCLEAR WASTE REGULATORY ANALYSES TECHNICAL OPERATING PROCEDURE	Proc. TOP-012 Revision 2 Change 0 Page 6 of 6

CENTER FOR NUCLEAR WASTE REGULATORY ANALYSES

SAMPLE CUSTODY/CONTROL LOG ENTRY FORM

SAMPLE IDENTIFICATION (Mandatory) JS-JB1

DESCRIPTION OF SAMPLE (Mandatory) The sample is a slide #7 cut from a mass of 'new' josephinite, a rock containing a naturally occurring nickel-iron alloy.

REFERENCE TOP OR SCIENTIFIC NOTEBOOK ENTRY Scientific Notebook 539. p.6

AMOUNT OF SAMPLE 1 Slide ~ 1/4 in thick SIZE ~ 2 x 2 1/2 in

DATE OF SAMPLE RECEIPT (Mandatory) ~~8/19/2002~~ 3/20/2002

DATE OF INITIAL LOG ENTRY (Mandatory) 8/19/2002 BY Narasi Sridhar

SAMPLE STORAGE LOCATION (Mandatory) Bldg 57

COLLECTION SITE (Reference Maps or Field Notes As Required) Sample collected 6/11/1999 approximately 5 miles SW of Cave Junction Oregon, within Section 1 between T39S and T40S as shown on the Cave Junction Oregon - California. 15 min Quadrangle. Map is shown in Sci Notebook 539

PERSON(S) WHO COLLECTED SAMPLE(S) Prof. John Bird - Cornell University

SUPPLIER same

OTHER

CNWRA FORM TOP-004

Attachment A

ENTER FOR NUCLEAR WASTE REGULATORY ANALYSES TECHNICAL OPERATING PROCEDURE	Proc. TOP-012 Revision 2 Change 0 Page 6 of 6

CENTER FOR NUCLEAR WASTE REGULATORY ANALYSES

SAMPLE CUSTODY/CONTROL LOG ENTRY FORM

SAMPLE IDENTIFICATION (Mandatory) JS - JB2

DESCRIPTION OF SAMPLE (Mandatory) The sample is a slide, designated #6 by J. Bird and cut from a mass of "net" josephinite, a rock containing a Ni-Fe alloy.

REFERENCE TOP OR SCIENTIFIC NOTEBOOK ENTRY

AMOUNT OF SAMPLE 1 Slide ~ 1/4 in thick SIZE ~ 2 x 2 1/2 in

DATE OF SAMPLE RECEIPT (Mandatory) 7/11/2003

DATE OF INITIAL LOG ENTRY (Mandatory) 7/11/2003 BY Gustavo Cragnolino

SAMPLE STORAGE LOCATION (Mandatory) Bldg 57

COLLECTION SITE (Reference Maps or Field Notes As Required) Sample collected 6/11/99, approximately 5 miles SW of Cave Junction, Oregon. More details are provided for sample JS - JB1, which is a companion sample.

PERSON(S) WHO COLLECTED SAMPLE(S) Prof John Bird - Cornell University

SUPPLIER Same

OTHER

CNWRA FORM TOP-004

Attachment A

Material: Zr-4 / Zr-702

Sample ID/Heat#:
Zr-4 220947Q
Zr-4 214450Q
Zr-4 1223217/243687
Zr-702 845645

Page numbers: 182 - 194

CENTER FOR NUCLEAR WASTE REGULATORY ANALYSES TECHNICAL OPERATING PROCEDURE	Proc. TOP-012 Revision 1 Page 9 of 9

SAMPLE CUSTODY ENTRY FORM

SAMPLE IDENTIFICATION (Mandatory)
Zr-4 Crevice Spec.

SAMPLE DESIGNATOR Teledyne Wah Chang #220947Q

DESCRIPTION OF SAMPLE (Mandatory)
Zr-4 crevice specimen

REFERENCE TOP or SCIENTIFIC NOTEBOOK ENTRY

SW 328

AMOUNT of SAMPLE _____ SIZE _____

DATE of SAMPLE RECEIPT (Mandatory) 5/4/99

DATE of LOG ENTRY 6/19/2000 by SB

SAMPLE STORAGE LOCATION (Mandatory)
Bldg 57

Collection site:

Supplier:

Other: _____

CNWRA FORM TOP-004

CENTER FOR NUCLEAR WASTE REGULATORY ANALYSES TECHNICAL OPERATING PROCEDURE	Proc. TOP-012 Revision 1 Page 9 of 9

SAMPLE CUSTODY ENTRY FORM

SAMPLE IDENTIFICATION (Mandatory)

Zr -4 cyl. specimens

SAMPLE DESIGNATOR SB 6/19/00 Teledyne Val Chang # 214450Q

DESCRIPTION OF SAMPLE (Mandatory)

cylindrical Zr-4 spec.

REFERENCE TOP or SCIENTIFIC NOTEBOOK ENTRY

SN 328

AMOUNT of SAMPLE _____ SIZE _____

DATE of SAMPLE RECEIPT (Mandatory) 5/15/00

DATE of LOG ENTRY 6/19/00 by SB

SAMPLE STORAGE LOCATION (Mandatory)

B57

Collection site:

Supplier:

Other: _____

CNWRA FORM TOP-004

CENTER FOR NUCLEAR WASTE REGULATORY ANALYSES TECHNICAL OPERATING PROCEDURE	Proc. TOP-012 Revision 1 Page 9 of 9

SAMPLE CUSTODY ENTRY FORM

SAMPLE IDENTIFICATION (Mandatory) 1223217 243687 on End of each Rod

SAMPLE DESIGNATOR Zircaloy-4.

DESCRIPTION OF SAMPLE (Mandatory)

0.526 – 0.531

Zirealoy-4 Rod, Annealed, ~~0.526~~ 0.531 Inch dia

J.y. 9/6/02

REFERENCE TOP or SCIENTIFIC NOTEBOOK ENTRY

Pages 3 – 6, Book # 549

AMOUNT of SAMPLE 25 feet total, in 3 pieces SIZE 0.526 – 0.531"

DATE of SAMPLE RECEIPT (Mandatory) 9/05/02

DATE of LOG ENTRY 9/06/02 by J. Yang

SAMPLE STORAGE LOCATION (Mandatory)

Building 57 lab.

Collection site:

Supplier: Wah Chang, Confirmatory Analysis conducted

Other: see page 8 of Book # 549.

CNWRA FORM TOP-004

CENTER FOR NUCLEAR WASTE REGULATORY ANALYSES

SAMPLE CUSTODY/CONTROL LOG ENTRY FORM

SAMPLE IDENTIFICATION (Mandatory) Zr 702 HT# 845645

SAMPLE DESIGNATION Bldg 57

DESCRIPTION OF SAMPLE (Mandatory) .625" x 27.5" Rod

ASME SB 550 / Astm B550

REFERENCE TOP OR SCIENTIFIC NOTEBOOK ENTRY

AMOUNT OF SAMPLE Bar. .625" x 27.5" SIZE 5/8"

DATE OF SAMPLE RECEIPT (Mandatory) 11/16/05

DATE OF INITIAL LOG ENTRY (Mandatory) 11/17/05 BY [illegible]

SAMPLE STORAGE LOCATION (Mandatory) Bldg 57

COLLECTION SITE (Reference Maps or Field Notes As Required)

N/A

PERSON(S) WHO COLLECTED SAMPLE(S)

N/A

SUPPLIER Teicor Industrial, Inc.

OTHER order # 206538 P.O. 650283 JB

CNWRA FORM TOP-004

187

Date:	11.05/03	
Company:	Tricor Industrial Corp	
P.O. No.:	9951	
S.O. No.:	120099	
Item No :	2	
SFC No.	1253557	
Quantity:	2	pcs
Net Weight:	17.7	lbs

Wah Chang
An Allegheny Technologies Company
P.O.Box 460
Albany, Oregon 97321-0136
(541)928-4211 FAX (541)967-8946

IN REGARD TO YOUR ORDER:
Description: Zircadyne® 702 Rod 0.625" Dia. x 19' R/L
Specifications: ASTM B550-01 (Gr. R60702), ASME SB550, DIN 50049 3.1.B,
Specifications: 3.1.B EN 10204 and Purchase Order

Zr-702

WC INVENTORY: INFORMATION

Certified:	10/28/03
Quantity:	11 pcs.
Weight:	169 lbs.
S/O No.:	118494
Item No.:	4
Heat No.:	845645 Zr
SFC No.:	1253571

PCS/LBS/FT: 2 lbs.
DESCRIPTION: Zr. Bar .625" x 27.5" Lg
ASME SB550 / ASTM B550
CUSTOMER: Southwest Research Institute
P.O.# 650283JB ORDER# 206538
DATE: 11 / 14 / 05
SIGNATURE: Krysten Neib

THE TEST REPORT FOLLOWS:

Material Condition: Annealed

INGOT CHEMISTRY ANALYSIS: RESULTS IN PERCENT

Element:	Spec. Min.	Top	Mid	Bot
Zr+Hf:	99.2	≥99.2	≥99.2	≥99.2
Element:	Spec. Max.			
Hf:	4.5	0.9	0.8	1.0
Fe+Cr:	0.20	0.08	0.07	0.08
H:	0.005	<0.0003	<0.0003	<0.0003
N:	0.025	0.005	0.007	0.005
C:	0.05	0.01	0.01	0.02
O:	0.16	0.13	0.13	0.14

PRODUCT CHEMISTRY ANALYSIS: RESULTS IN PPM

Element:	Spec. Max.	Results
H:	50	7
N:	250	75
O:	1600	1386

CERTIFIED BY: R. Louie, Quality Assurance Dept.: R. Louie 10-28-03
mrc
WC: A Registered/Certified ISO 9002 Company.
Format: A1.01.01.09.Q702.6.P1-2
Document: C1.02.06.05

COMPLETED

Wah Chang
An Allegheny Technologies Company
P.O.Box 460
Albany, Oregon 97321-0136
(541)928-4211 FAX (541)967-6948

WC INVENTORY: INFORMATION

S/O No.: 118494
Item No.: 4
Heat No.: 845645 Zr
SFC No.: 1253571

ROOM TEMPERATURE TENSILE TEST: RESULTS
Method: ASTM E8

Test:	Spec. Min.:	Long.
Tensile Strength - MPa:	379	497
Yield Strength (0.2% Offset) - MPa:	207	309
Elongation in 25.4 mm - (%):	16	30
Tensile Strength - Ksi:	55	72.1
Yield Strength (0.2% Offset) - Ksi:	30	44.8
Elongation in 1" - (%):	16	30

Specimen Machining Documentation Form

Purchase/Work Order Number			
Material Identification		Zr 702	
Material Heat Number		845645	
CNWRA Requestor		Xihua He	
Vendor		SwRI Machine shop	
Specimen Description (CNWRA Drawing Number, ASTM Standard)		Crevice washers 20.06002.01.322.006 Cyl - 20.01402.57.019	
To be Completed Prior to Order		**To be Completed upon Receipt of Order**	
Date	11/17/05	Date	11/22/05
Material Supplied to Vendor (Y/N)	Y	Remaining Stock Material Returned From Vendor (Y/N)	Y
Material Marked with *Heat Number and* Rolling Direction (Y/N)	Y	Remaining Stock Material Marked with Heat Number and Rolling Direction (Y/N)	Y
Dimensions of Material stock provided (L x W x H)	Rod .625" x 27.5" Lg.	Remaining Stock Material Dimensions (L x W x H)	Rod .625" x 12"
Specimen Quantity Ordered	10 crevice washer 4 cyl.	Specimen Quantity Received	10 crevice washer 4 cyl.
Dimensional Inspection Required (Y/N)	Y	Dimensional Inspection Provided (Y/N)	Y
Marked Containment Provided (Y/N)	Y	Marked Containment Used (Y/N)	Y
Documented in Scientific Notebook Number/Page Number			
NCR Number (if applicable)			

Signature 11/17/05 Date

Specimen Machining Documentation Form

Purchase/Work Order Number			
Material Identification		Zr 4	
Material Heat Number		1223217-243687	
CNWRA Requestor		X.hua He	
Vendor		Swei Machine shop	
Specimen Description (CNWRA Drawing Number, ASTM Standard)		Nut/Bolts 20.06002.01.322.10 Cyl. 20.01402.571.019	
To be Completed Prior to Order		To be Completed upon Receipt of Order	
Date	11/17/05	Date	11/22/05
Material Supplied to Vendor (Y/N)	Y	Remaining Stock Material Returned From Vendor (Y/N)	Y
Material Marked with Heat Number and Rolling Direction (Y/N)	Y	Remaining Stock Material Marked with Heat Number and Rolling Direction (Y/N)	Y
Dimensions of Material stock provided (L x W x H)	4 ft 8 in Roo .5" Dia.	Remaining Stock Material Dimensions (L x W x H)	2 ft x 6 in Roo .5" Dia
Specimen Quantity Ordered	4 nuts/Bolt 6 cyl.	Specimen Quantity Received	4 Nuts/Bolts 6 cyl.
Dimensional Inspection Required (Y/N)	Y	Dimensional Inspection Provided (Y/N)	Y
Marked Containment Provided (Y/N)	Y	Marked Containment Used (Y/N)	Y
Documented in Scientific Notebook Number/Page Number			
NCR Number (if applicable)			

Signature 11/17/05 Date

Xihua He **CNWRA-SwRI** **Phone: 210-522-5194** **Fax: 210-522-6081** **e-mail: xhe@swri.org**	**CNWRA drawing #** **20.06002.01.322.010**	**To be completed at time of order** **Material:** Zr-4 Zircaloy-4 **Heat:** **Specimen orientation:** **Other:** using ½" rod

Bolts and nuts for multiple crevice assembly

Bolt:

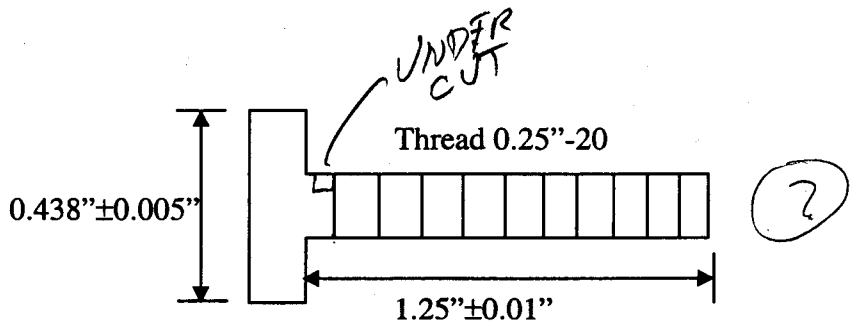

X4

Nut:

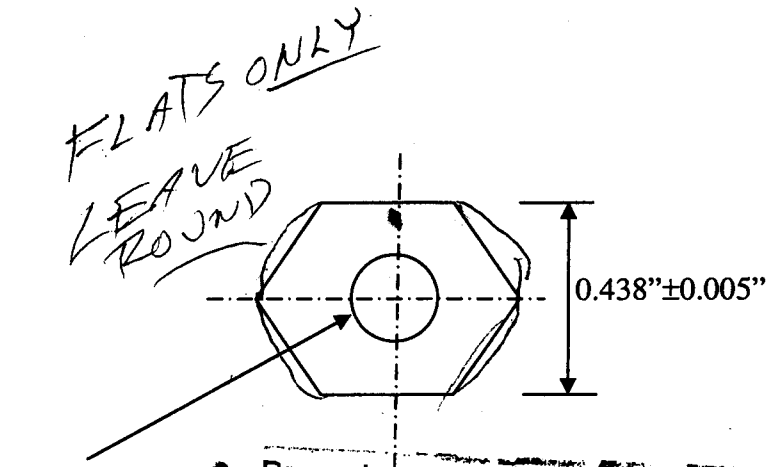

Procedure
Project #
TOTAL POS. INSPECTED 4ea
TOTAL POS. ACCEPTED 4ea
TOTAL POS. REJECTED 0
"NR #" IF REJECTS NA
INSPECTOR
LOCATION CC31 MS
J.C. # 82253-01
EQUIPMENT
Cal 005081 Due 9-16-06
Thd Gage 002176 Due 11-19-07
DATE NOV 21 2005

Initiated by: X. He Date

Reviewed by: V. Jain Date

QA approval: B. Brient Date

192

Darrell S. Dunn
SwRI-CNWRA
Phone: (210) 522-6090
Fax: (210) 522-5184

Cylindrical Test Specimen

CNWRA Drawing 20.01402.571.019

#5-40 thread centered minimum 0.250" deep

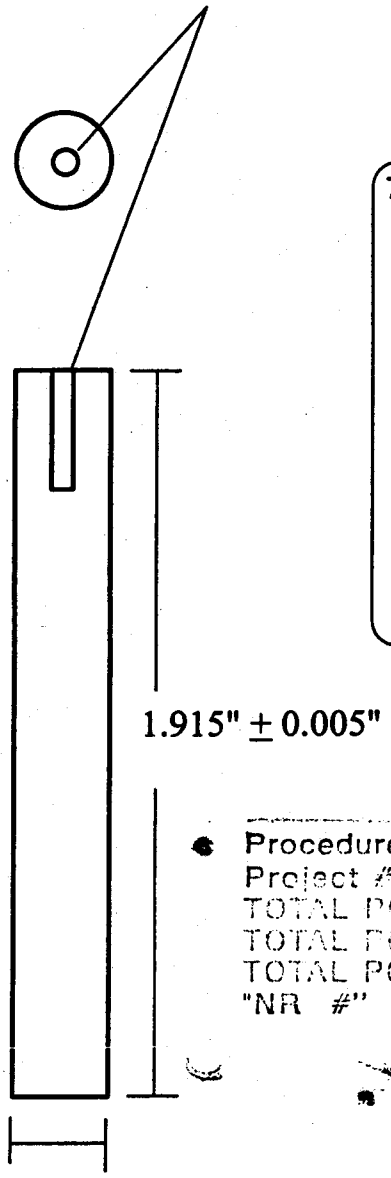

This information is to be completed at time of fabrication

Material: Zr 4

Heat #: 1223217 - 243687

Specimen Orientation: Cut from Rod stock

Other: Thanks Brian

Procedure
Project #
J.C. #
LOCATION CC-31
EQUIPMENT
TOTAL PCS. INSPECTED 6
TOTAL PCS. ACCEPTED 6
TOTAL PCS. REJECTED 0
"NR #" IF REJECTS NA
Cal 005081 Dc 9-16-0
Thd Gage 002176 Dw 11-1
INSPECTOR NOV 21 2005
DATE SwRI 24 QA

Darrell S. Dunn 10/15/01
Initiated by. D. Dunn Date

Mark R. Ehnstrom for 10/15/01
QA Approval B. Mabrito Date

10/15/01
Reviewed by V. Jain Date

193

Xihua He
CNWRA-SwRI
Phone: 210-522-5194
Fax: 210-522-5184
e-mail: xhe@swri.org

SwRI drawing #
20.06002.01.322.006

Material: Zirconium-702
Heat #: 845645 5/8" rod

Serrated Zircaloy-4 crevice washer with 24 plateaus

X10

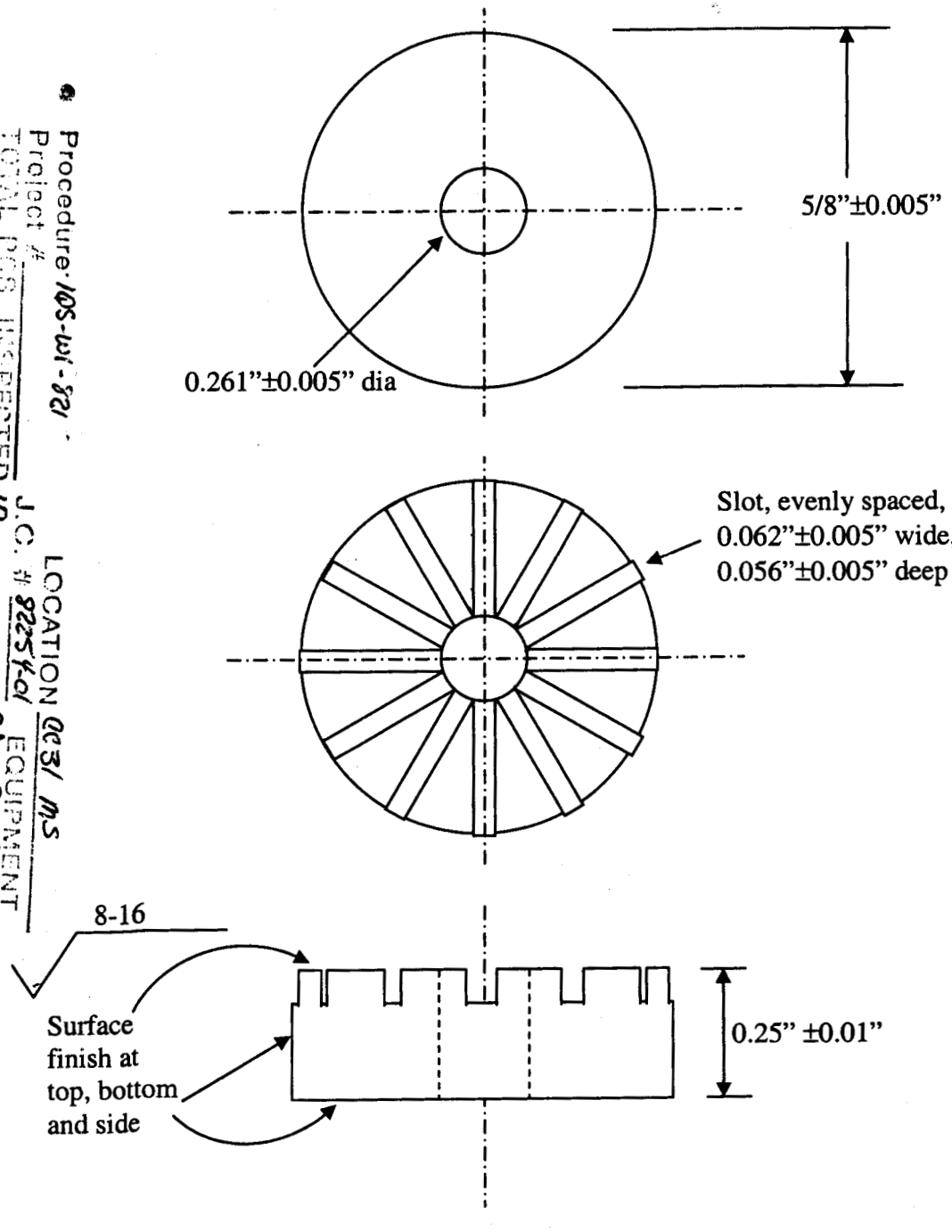

Procedure: 105-WI-821
Project #
TOTAL PCS. INSPECTED 10
TOTAL PCS. ACCEPTED 10
TOTAL PCS. REJECTED 0
"NR #" IF REJECTS NA
INSPECTOR
LOCATION CC31 MS
J.C. # 82254-01
EQUIPMENT
Cal. 005081 9-16-06
Opt. Comp. 002158 Due 1-19-06
DATE NOV 22 2005

Darrell S. Dunn
SwRI-CNWRA
Phone: (210) 522-6090
Fax: (210) 522-5184

Cylindrical Test Specimen

CNWRA Drawing 20.01402.571.019

#5-40 thread centered minimum 0.250" deep

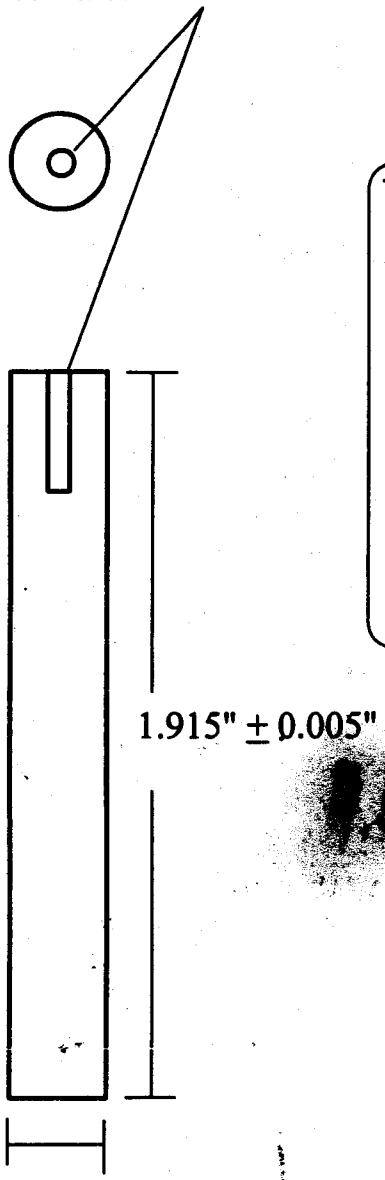

This information is to be completed at time of fabrication

Material: ZC 702

Heat #: 845645

Specimen Orientation: Cut from Rod stock

Other: Thanks Brian

Procedure 145-WI-821

Project # LOCATION CC 31 MS

TOTAL PCS. INSPECTED 4 J.C. # 8225402 EQUIPMENT Cal 005081 Due 9-16-02 Thd Gage 082176 Due 11-19-07

TOTAL PCS. ACCEPTED 4

TOTAL PCS. REJECTED 0

"NR #" IF REJECTS NA

INSPECTOR SwRI QA

DATE NOV 22 2005

Darrell S. Dunn 10/15/01
Initiated by. D. Dunn Date

Mark R. Shuttleworth for 10/15/01
QA Approval B. Mabrito Date

10/15/01
Reviewed by V. Jain Date

Material: Titanium
Sample ID/Heat#:
R585
BN 5224
11044
CN 2775
R8453
886025
00192DB
A21A

Page numbers: 195 - 248

CENTER FOR NUCLEAR WASTE REGULATORY ANALYSES TECHNICAL OPERATING PROCEDURE	Proc. TOP-012 Revision 1 Page 9 of 9

SAMPLE CUSTODY ENTRY FORM

SAMPLE IDENTIFICATION (Mandatory)

Ti Gr 7 Crevice & Cyl spec

SAMPLE DESIGNATOR Timet # R585

DESCRIPTION OF SAMPLE (Mandatory)

Ti Gr 7 crevice & cylindrical spec, some w/ weldment

REFERENCE TOP or SCIENTIFIC NOTEBOOK ENTRY

SN 320

AMOUNT of SAMPLE _____ SIZE _____

DATE of SAMPLE RECEIPT (Mandatory) 3/26/99

DATE of LOG ENTRY 6/19/00 by SB

SAMPLE STORAGE LOCATION (Mandatory)

Bldg 57

Collection site:

Supplier:

Other:

CNWRA FORM TOP-004

CENTER FOR NUCLEAR WASTE REGULATORY ANALYSES TECHNICAL OPERATING PROCEDURE	Proc. TOP-012 Revision 1 Page 9 of 9

SAMPLE CUSTODY ENTRY FORM

SAMPLE IDENTIFICATION (Mandatory)
Ti Gr 2 cyl. Spec.

SAMPLE DESIGNATOR Ti Industries # BN 5224

DESCRIPTION OF SAMPLE (Mandatory)
cylindrical Ti 2 Spec.

REFERENCE TOP or SCIENTIFIC NOTEBOOK ENTRY

SN 320

AMOUNT of SAMPLE _____ SIZE _____

DATE of SAMPLE RECEIPT (Mandatory) 5/15/00

DATE of LOG ENTRY 6/19/00 by SB

SAMPLE STORAGE LOCATION (Mandatory)
Bldg 57

Collection site:

Supplier:

Other: _____

CNWRA FORM TOP-004

CENTER FOR NUCLEAR WASTE REGULATORY ANALYSES TECHNICAL OPERATING PROCEDURE	Proc. TOP-012 Revision 1 Page 9 of 9

SAMPLE CUSTODY ENTRY FORM

SAMPLE IDENTIFICATION (Mandatory)

Ti Gr2 Crevice Spec.

SAMPLE DESIGNATOR Ti Co Heat # 11044

DESCRIPTION OF SAMPLE (Mandatory)

Ti Gr2 Crevice Spec.

REFERENCE TOP or SCIENTIFIC NOTEBOOK ENTRY

SN 320

AMOUNT of SAMPLE _____ SIZE _____

DATE of SAMPLE RECEIPT (Mandatory) 5/15/2000

DATE of LOG ENTRY 6/19/2000 by [illegible]

SAMPLE STORAGE LOCATION (Mandatory)

Bldg 57

Collection site:

Supplier:

Other: _____

CNWRA FORM TOP-004

CENTER FOR NUCLEAR WASTE REGULATORY ANALYSES

SAMPLE CUSTODY/CONTROL LOG ENTRY FORM

SAMPLE IDENTIFICATION (Mandatory) Titanium Grade 7 plate

SAMPLE DESIGNATION Ti Grade-7

DESCRIPTION OF SAMPLE (Mandatory)

Titanium Grade-7 plate

Manufacturer: Timet

Heat #: CN2775

REFERENCE TOP OR SCIENTIFIC NOTEBOOK ENTRY #729, pages 4, 5, 66, 67

X.H 3/23/07

AMOUNT OF SAMPLE 1 plate, 12.5 LBS SIZE 12" X 12" X 0.5"

DATE OF SAMPLE RECEIPT (Mandatory) 7/18/2005

DATE OF INITIAL LOG ENTRY (Mandatory) 7/18/2005 BY Xihua He

SAMPLE STORAGE LOCATION (Mandatory)

Bldg. 57

COLLECTION SITE (Reference Maps or Field Notes As Required)

PERSON(S) WHO COLLECTED SAMPLE(S)

SUPPLIER Tricor Industrial, Inc.

OTHER

CNWRA FORM TOP-004

TRICOR
INDUSTRIAL, INC.

CORPORATE OFFICE
3000 Old Airport Rd.
P.O. Box 752
Wooster, Ohio 44691
(800) 421-5141
(330) 264-3299
FAX (330) 262-6678

INDUSTRIAL BRANCH OPERATION
823 West Bowman Street
Wooster, Ohio 44691
(800) 421-5141
(330) 264-3299
FAX (330) 262-7311
sales@tricorindustrial.com

INDUSTRIAL BRANCH OPERATION
5169 Guernsey Street
Bellaire, Ohio 43906
(740) 676-5010
FAX (740) 676-2401

OHIO METALS DIVISION
3000 Old Airport Road
Wooster, Ohio 44691
(800) 421-5141
(330) 264-3299
FAX (330) 264-1181
sales@tricormetals.com

TEXAS METALS DIVISION
101 S. Trade Center Pkwy.
Conroe, Texas 77385
(888) 987-4267
(936) 273-2661
FAX (936) 273-2669
ho@tricormetals.com

INDUSTRIAL FASTENERS AND SUPPLIES

PREMIUM METALS FABRICATION AND MILL PRODUCTS

TRICOR METALS DIVISION

CERTIFICATE OF TESTS

CUSTOMER: SOUTHWEST RESEARCH INSTITUTE CUSTOMER PO#: 544447G

REPORT DATE: 10/28/03 SHIP DATE: 7/12/05 HEAT #: CN2775
LOT/TEST: 4-J5302-1-1 & 2-1

SIZE: .500"THK X 12" X 12"
FINISH: TITANIUM PLATE

MATERIAL SPECS. ASTM B: 265-98(A00), 01
ASME SB: 265-02 ALLOY: GRADE 7
EN10204 3.1.B

LBS/FT/PCS: 12.5 LBS ORDER #: 198825

CHEMICAL ANALYSIS %

C: .010/.010	H: 3/2/14 PPM	O: .137/.139	
N: .006/.007	Fe: .07/.08	Ti: BAL	Pd: .15/.15
Hf:	Fe+Cr:	Zr+Hf:	Ru:

MECHANICAL PROPERTIES

KSI-L	KSI-T
YIELD: 41/42	YIELD : 56/56
TENSILE: 72/74	TENSILE : 73/74
ELONGATION: 29/31	ELONGATION : 31/31
RED. OF AREA: 52/53	RED. OF AREA : 50/51
FLATTENING:	HYDROSTATIC:
REVERSE FLATTEN:	PNEUMATIC:
FLARE TEST:	HARDNESS:
BEND TEST:	EDDY CURRENT:
ANNEAL: ANNEALED 24MINS @1550F AC	ULTRASONIC:

REMARKS:

THIS MATERIAL DID NOT COME IN CONTACT WITH MERCURY OR DEVICES CONTAINING MERCURY AT TRICOR METALS DIVISION. WE CERTIFY THAT THE CHEMICAL ANALYSIS AND PHYSICAL TEST RESULTS APPLYING ON THE ABOVE ORDER NUMBER ARE CORRECT AND TRUE TO THE BEST OF OUR KNOWLEDGE AND BELIEF.

AUTHORIZED SIGNATURE.

Specimen Machining Documentation Form

Purchase/Work Order Number			
Material Identification		Titanium Grade-7	
Material Heat Number		CN 2775	
CNWRA Requestor		Xihua He	
Vendor		SwRI Machine shop	
Specimen Description (CNWRA Drawing Number, ASTM Standard)		20.06002.01.322.007 10 XH 7/18/05	
To be Completed Prior to Order		**To be Completed upon Receipt of Order**	
Date	7/18/05	**Date**	8/3/05
Material Supplied to Vendor (Y/N)	Y	**Remaining Stock Material Returned From Vendor (Y/N)**	Y
Material Marked with Heat Number and Rolling Direction (Y/N)	Y	**Remaining Stock Material Marked with Heat Number and Rolling Direction (Y/N)**	Y
Dimensions of Material stock provided (L x W x H)	12"x12"x0.5" with a corner cut off for confirmatory analysis	**Remaining Stock Material Dimensions (L x W x H)**	12"x6.5"x0.5" one corner off
Specimen Quantity Ordered	4	**Specimen Quantity Received**	4
Dimensional Inspection Required (Y/N)	Y	**Dimensional Inspection Provided (Y/N)**	Y
Marked Containment Provided (Y/N)	Y	**Marked Containment Used (Y/N)**	Y
Documented in Scientific Notebook Number/Page Number 729/6			
NCR Number (if applicable)			

He Xia 8/3/05

Signature Date

202

(Y4)

Xihua He CNWRA-SwRI Phone: 210-522-5194 Fax: 210-522-6081 e-mail: xhe@swri.org	CNWRA drawing # 20.06002.01.322.010	To be completed at time of order Material: Titanium Grade-7 Heat: CN2775 Specimen orientation: Normal to rolling direction Other:

Bolts and nuts for multiple crevice assembly

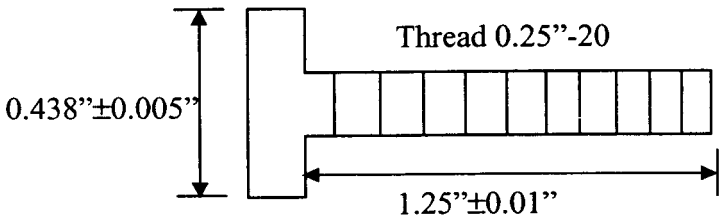

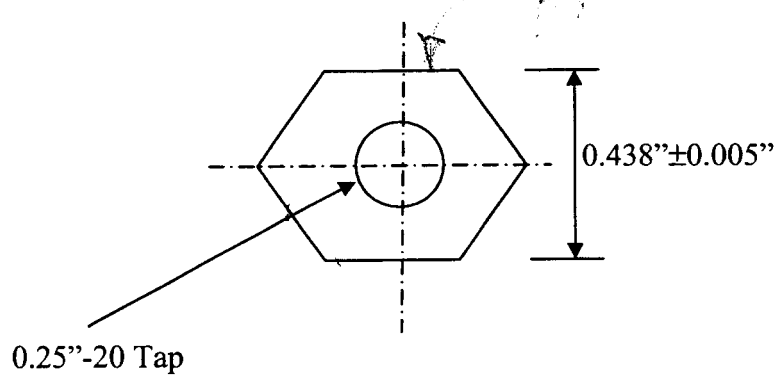

Procedure: IQS-ucl-821
Project #
TOTAL PCS. INSPECTED 4
TOTAL PCS. ACCEPTED 4
TOTAL PCS. REJECTED 0
"NR #" IF REJECTS NA
INSPECTOR
LOCATION CC31 MS
J.C. # 81704
EQUIPMENT
Cal005081 Due 1-18-06
Thd Gas 002176 Due 11-19-07
DATE AUG - 3 2005

7/18/05
Initiated by: X. He Date

7/18/05
Reviewed by: V. Jain Date

7/19/05
QA approval: B. Brient Date

Specimen Machining Documentation Form

Purchase/Work Order Number			
Material Identification		Titanium Grade-7	
Material Heat Number		CN2775	
CNWRA Requestor		Xihua He	
Vendor		SwRI Machine Shop	
Specimen Description (CNWRA Drawing Number, ASTM Standard)		20.06002.01.322.~~009~~ 011 xH 7/18/05	
To be Completed Prior to Order		**To be Completed upon Receipt of Order**	
Date	7/18/05	**Date**	8/3/05
Material Supplied to Vendor (Y/N)	Y	**Remaining Stock Material Returned From Vendor (Y/N)**	Y
Material Marked with Heat Number and Rolling Direction (Y/N)	Y	**Remaining Stock Material Marked with Heat Number and Rolling Direction (Y/N)**	Y
Dimensions of Material stock provided (L x W x H)	12"x12"x0.5" with a corner cutoff for confirmatory analysis	**Remaining Stock Material Dimensions (L x W x H)**	12"x 6.5"x0.5" with one corner cutoff for confirmatory
Specimen Quantity Ordered	6	**Specimen Quantity Received**	6
Dimensional Inspection Required (Y/N)	Y	**Dimensional Inspection Provided (Y/N)**	Y
Marked Containment Provided (Y/N)	Y	**Marked Containment Used (Y/N)**	Y
Documented in Scientific Notebook Number/Page Number 729/7			
NCR Number (if applicable)			

He Xi 8/3/05

Signature Date

204

Xihua He CNWRA-SwRI Phone: 210-522-5194 Fax: 210-522-6081 e-mail: xhe@swri.org	CNWRA drawing # 20.06002.01.322.011	To be completed at time of order Material: Titanium Grade-7 Heat: CN2775 Specimen orientation: ~~Normal to rolling direction~~ Other:

Large surface area serrated crevice washer with 24 plateaus

X6

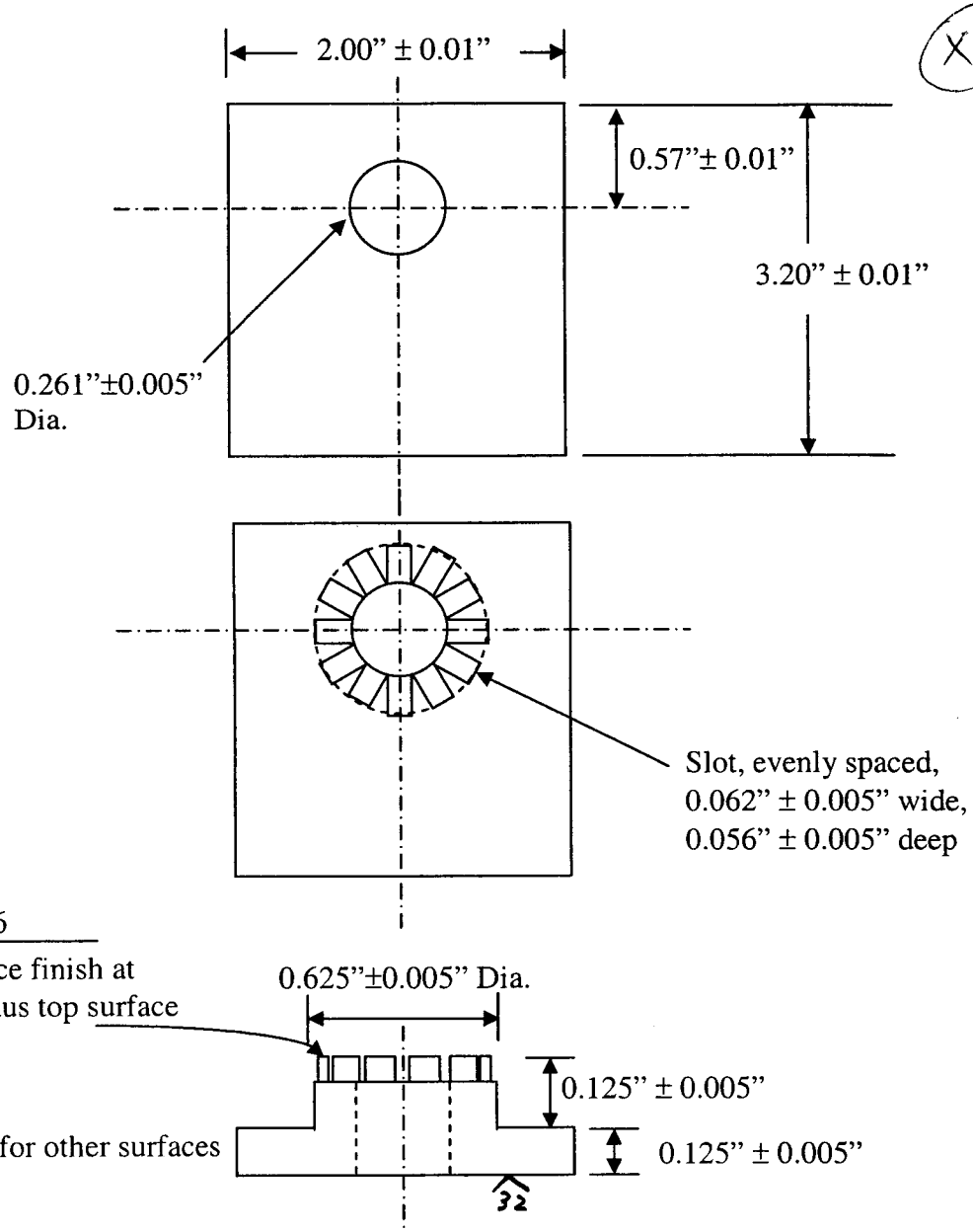

Procedure: 168-WI-821
Project #
TOTAL PCS. INSPECTED 6
TOTAL PCS. ACCEPTED 6
TOTAL PCS. REJECTED 0
"NR #" IF REJECTS NA
INSPECTOR
LOCATION CC 31 MS
J.C. # 81704
EQUIPMENT
CMM 006149 Due 1-18-06
DATE AUG - 3 2005

7/20/05

Initiated by: X. He Date

Reviewed by: V. Jain Date

1/20/05

QA approval: B. Brient Date

Specimen Machining Documentation Form

Purchase/Work Order Number			
Material Identification		Titanium Grade-7	
Material Heat Number		CN2775	
CNWRA Requestor		Xihua He	
Vendor		SwRI Machine Shop	
Specimen Description (CNWRA Drawing Number, ASTM Standard)		20.06002.01.322.006	
To be Completed Prior to Order		**To be Completed upon Receipt of Order**	
Date	8/5/05	**Date**	8/11/05
Material Supplied to Vendor (Y/N)	Y	**Remaining Stock Material Returned From Vendor (Y/N)**	Y
Material Marked with Heat Number and Rolling Direction (Y/N)	Y	**Remaining Stock Material Marked with Heat Number and Rolling Direction (Y/N)**	Y
Dimensions of Material stock provided (L x W x H)	12"x6.5"x0.5" with one corner cut off	**Remaining Stock Material Dimensions (L x W x H)**	11"x 6.5"x 0.5" with one corner off
Specimen Quantity Ordered	6	**Specimen Quantity Received**	6
Dimensional Inspection Required (Y/N)	Y	**Dimensional Inspection Provided (Y/N)**	~~N~~ Y
Marked Containment Provided (Y/N)	Y	**Marked Containment Used (Y/N)**	Y
Documented in Scientific Notebook Number/Page Number 729/10			
NCR Number (if applicable)			

He Xia 8/11/05

Signature Date

Xihua He
CNWRA-SwRI
Phone: 210-522-5194
Fax: 210-522-6081
e-mail: xhe@swri.org

SwRI drawing #
20.06002.01.322.006

X6

Serrated ~~Alloy 22~~ Titanium Grade-7 crevice washer with 24 plateaus

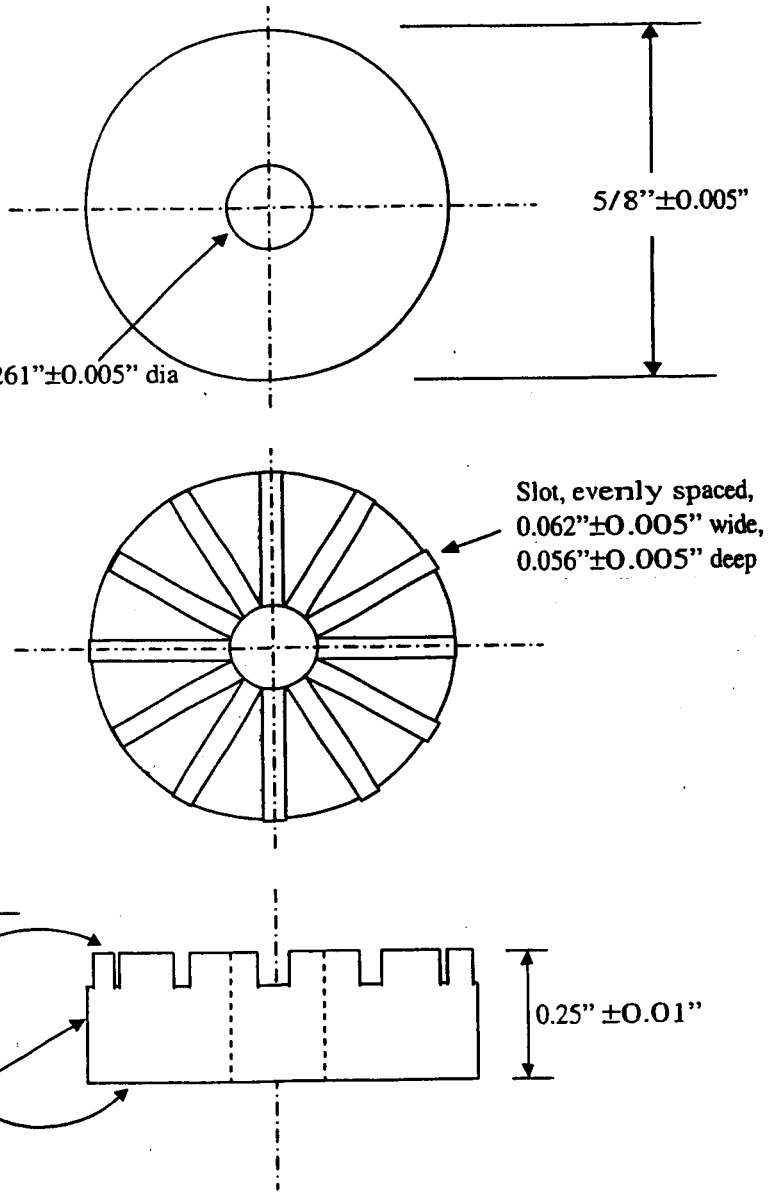

Procedure: IPS-WI-821
Project #
TOTAL PCS. INSPECTED 6
TOTAL PCS. ACCEPTED 6
TOTAL PCS. REJECTED 0
"NR #" IF REJECTS NA
LOCATION CC31 MS
J.C. # 81821
EQUIPMENT
CMM 006149
Due 1-18-06
8-46
INSPECTOR SwRI 24 QA
DATE AUG 11 2005

Titanium Grade-7

7/5/05
Initiated by: X. He Date

7/5/05
Reviewed by: V. Jain Date

7/5/05
QA approval: B. Brient Date

Specimen Machining Documentation Form

Purchase/Work Order Number			
Material Identification		Titanium Grade-7	
Material Heat Number		CN2775	
CNWRA Requestor		Xihua He	
Vendor		SwRI Machine shop	
Specimen Description (CNWRA Drawing Number, ASTM Standard)		Test fixture, large plate for coupling	
To be Completed Prior to Order		**To be Completed upon Receipt of Order**	
Date	9/26/05	**Date**	9/30/05
Material Supplied to Vendor (Y/N)	Y	**Remaining Stock Material Returned From Vendor (Y/N)**	Y
Material Marked with Heat Number and Rolling Direction (Y/N)	Y	**Remaining Stock Material Marked with Heat Number and Rolling Direction (Y/N)**	Y
Dimensions of Material stock provided (L x W x H)	11" x 6.5" x 0.5" with one corner off	**Remaining Stock Material Dimensions (L x W x H)**	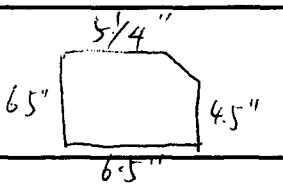
Specimen Quantity Ordered	2	**Specimen Quantity Received**	2
Dimensional Inspection Required (Y/N)	Y	**Dimensional Inspection Provided (Y/N)**	Y
Marked Containment Provided (Y/N)	Y	**Marked Containment Used (Y/N)**	Y
Documented in Scientific Notebook Number/Page Number	N.A		
NCR Number (if applicable)			

He 10/4/05

Signature Date

Specimen Machining Documentation Form

Purchase/Work Order Number			
Material Identification		Ti 7 Plate	
Material Heat Number		CN 2775	
CNWRA Requestor		X.hua He	
Vendor		SWRI Machine shop	
Specimen Description (CNWRA Drawing Number, ASTM Standard)		Hand Drawing	
To be Completed Prior to Order		**To be Completed upon Receipt of Order**	
Date	1/9/06	Date	1/12/06
Material Supplied to Vendor (Y/N)	Y	Remaining Stock Material Returned From Vendor (Y/N)	Y
Material Marked with Heat Number and Rolling Direction (Y/N)	Y	Remaining Stock Material Marked with Heat Number and Rolling Direction (Y/N)	Y
Dimensions of Material stock provided (L x W x H)	6.5" 6.5"	Remaining Stock Material Dimensions (L x W x H)	5.5" 6"
Specimen Quantity Ordered	6	Specimen Quantity Received	6
Dimensional Inspection Required (Y/N)	Y Dimension Only	Dimensional Inspection Provided (Y/N)	Y
Marked Containment Provided (Y/N)	Y	Marked Containment Used (Y/N)	Y
Documented in Scientific Notebook Number/Page Number			
NCR Number (if applicable)			

Signature 1/9/06 Date

No Dimensions Specs Needed

Need 6 Specimens from Ti 7 Plate
Cut 1" By 3 Equal Specimens w/length of 3.25"

209

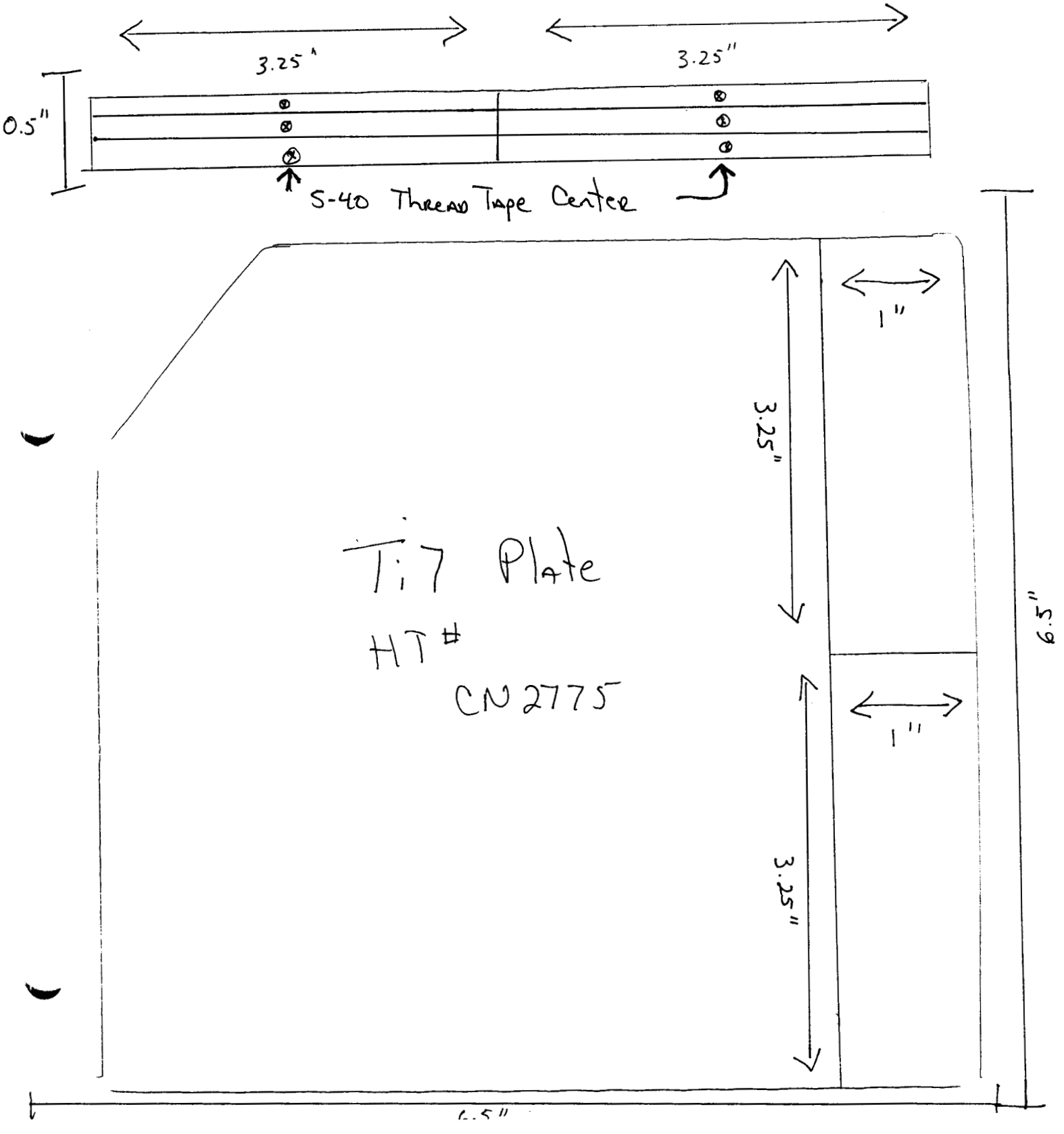

CENTER FOR NUCLEAR WASTE REGULATORY ANALYSES

SAMPLE CUSTODY/CONTROL LOG ENTRY FORM

SAMPLE IDENTIFICATION (Mandatory) Titanium Grade 7 plates

SAMPLE DESIGNATION Ti Grade 7 HT# CN2775

DESCRIPTION OF SAMPLE (Mandatory)

Titanium Grade 7 Plates 1st plate = 15.5" x 7.75" - 2nd plate 10.5" x 17"
3rd plate 21.75" x 9.5" All same HT# CN2775
* 3 Plates Total

REFERENCE TOP OR SCIENTIFIC NOTEBOOK ENTRY

AMOUNT OF SAMPLE All plates = 43 lbs SIZE See Above

DATE OF SAMPLE RECEIPT (Mandatory) 4/26/06

DATE OF INITIAL LOG ENTRY (Mandatory) 4/26/06 BY Brian Dearby

SAMPLE STORAGE LOCATION (Mandatory) Bldg 57

COLLECTION SITE (Reference Maps or Field Notes As Required)

PERSON(S) WHO COLLECTED SAMPLE(S)

SUPPLIER Tri con Industrial, Inc.

OTHER

CNWRA FORM TOP-004

TIMET

Titanium Metals Corporation

Approved Certificate

100 Titanium Way, Toronto, OH 43964
Telephone (740) 537-5694, Fax (740) 537-5759

CERTIFICATE ID	CUSTOMER	PURCHASE ORDER
CN2775-4	TRICOR INDUSTRIAL, INC.	029616-00
HEAT NUMBER	**GRADE**	**PRODUCT DESCRIPTION**
CN2775	TIMETAL®50A .15Pd	.500" PLATE

SPECIFICATIONS

ASME SB 265_01 GR 7; ASTM B 265_02 GR 7

Results are from TIMET Quality Control records on file
Cert Master used: PLATE01
Sales Order # : 110029

Date : 28-OCT-2003
Time : 12:47

Carolyn S Thompson TIMET 101
Authorized Signature

PCS/LBS/FT: 43 LBS
DESCRIPTION: Grade 7 Plate
.500" THK X 10.75" X 17" (1) & .500" THK X 7.75" X 15.5" (1)
.500" THK X 9.5" X 21.5" (1)
CUSTOMER: Southwest Research
P.O. # 66300G ORDER # 216234
DATE: 4 / 19 / 2006
SIGNATURE: [signature]

ANSI-RAB QMS ACCREDITED
REGISTERED ISO 9001:2000 & AS9100

This test report shall not be reproduced except in full, without the written approval of TIMET.
The intentional recording of false, fictitious, or fraudulent statements or entries on the certificate may be punished as a felony under federal law.

Nadcap
NDT & LAB

TIMET

Titanium Metals Corporation

100 Titanium Way, Toronto, OH 43964
Telephone (740) 537-5694, Fax (740) 537-5759

Approved Certificate

CERTIFICATE ID	CUSTOMER	PURCHASE ORDER
CN2775-4	TRICOR INDUSTRIAL, INC.	029616-00
HEAT NUMBER	**GRADE**	**PRODUCT DESCRIPTION**
CN2775	TIMETAL®50A .15Pd	.500" PLATE

SPECIFICATIONS

ASME SB 265_01 GR 7; ASTM B 265_02 GR 7

DELIVERY CONDITION

Annealed

CHEMICAL ANALYSIS

(Weight Percent)

	C	Fe	N	O	Pd
CN2775-TOP	0.010	0.08	0.007	0.137	0.15
CN2775-BOT	0.010	0.07	0.006	0.139	0.15

	H2 (ppm)	LOCATION	METHOD
CN2775-4-J5302-1-1	3	PLATE	FUSION
CN2775-4-J5302-2-1	2	PLATE	FUSION

Yttrium less than 10 ppm.
Residual elements each less than 0.10% maximum, 0.40% maximum total.
Balance titanium.

MECHANICAL PROPERTIES

Mill Annealed 24 Minutes @ 1550F AC

Room Temperature Tensile Results (YS @ .2% Offset)

	TENSILE DIR	TS KSI	YS KSI	4D, % EL	RA, %
CN2775-4-J5302-1-1	L	74	41	29	52
CN2775-4-J5302-1-1	T	74	56	31	51
CN2775-4-J5302-2-1	L	72	42	31	53
CN2775-4-J5302-2-1	T	73	56	31	50

COMPLIANCE STATEMENTS

1. Surface free from contamination and product conforms to the other technical requirements of the referenced specifications.
2. Material has received a .010" minimum pickle.
3. Material melted using EB process.
4. Material and certificate in compliance with 50049-3.1.B as in EN 10204 3.1.B.
5. TIMET-Toronto has established a quality management system that is in compliance with ISO 9001 & Q9001 - 2000 & AS 9100 Rev. A (2001), Certificate #1033, through American Quality Assessors, registration effective 8-Apr-03.

ANSI-RAB QMS ACCREDITED
REGISTERED ISO 9001:2000 & AS9100

This test report shall not be reproduced except in full, without the written approval of TIMET.
The intentional recording of false, fictitious, or fraudulent statements or entries on the certificate may be punished as a felony under federal law.

Nadcap pri Performance Review Institute Accredited
NDT & LAB

CENTER FOR NUCLEAR WASTE REGULATORY ANALYSES

SAMPLE CUSTODY/CONTROL LOG ENTRY FORM

SAMPLE IDENTIFICATION (Mandatory) Titanium Grade 5 Ht# R8453

SAMPLE DESIGNATION Ti 5 Ht# R8453

DESCRIPTION OF SAMPLE (Mandatory) 12" x 12" x .500"

2 Plates

REFERENCE TOP OR SCIENTIFIC NOTEBOOK ENTRY

AMOUNT OF SAMPLE 2 Plates 24.8 lbs SIZE See Above (12x12x.5")

DATE OF SAMPLE RECEIPT (Mandatory) 8/17/06

DATE OF INITIAL LOG ENTRY (Mandatory) 8/17/06 BY (Brian K Deeby)

SAMPLE STORAGE LOCATION (Mandatory) Bldg. 57

COLLECTION SITE (Reference Maps or Field Notes As Required)

PERSON(S) WHO COLLECTED SAMPLE(S)

SUPPLIER Tei Con Industrial PO# 663618G

OTHER

CNWRA FORM TOP-004

P A C K I N G L I S T

Order-No.	Order-Date	Cust-No	Cust-Po-No / Job-No	Warehouse-Location
223826	08/14/06	804913	663618G	HO HOUSTON METALS

Sold To: SOUTHWEST RESEARCH INSTITUTE
6220 CULEBRA ROAD

SAN ANTONIO TX 78238
USA

Ship To: SOUTHWEST RESEARCH INSTITUTE
9503 W. COMMERCE
SHIPPING & RECEVING BLDG #242
SAN ANTONIO TX 78227

Ship-Via	Frt-Cod	Ship-Date	Shipping-Instructions
UPS GROUND	Ppd	08/15/06	KSN PPD & ADD MTR'S REQUIRED

Qty Ordered	Qty Shipped	Item-No/Description	Unit-Wght	Uom	Packed By
25.000	24.800	05PLT.500 TI PLATE .500" X 12" X 12" LG ASME SB265-5/ASTM B265-5 (2PC) Lot #: R8453 Exp Date: 12/30	.000	LB	.....

Packing List Totals

Qty Ordered - 25.000 Qty Shipped - 24.800 TTL WEIGHT - .00

CERTIFICATE OF TESTS

TRICOR
INDUSTRIAL, INC.

CORPORATE OFFICE
3000 Old Airport Rd.
P.O. Box 752
Wooster, Ohio 44691
(800) 421-5141
(330) 264-3299
FAX (330) 262-6678

INDUSTRIAL BRANCH OPERATION
823 West Bowman Street
Wooster, Ohio 44691
(800) 421-5141
(330) 264-3299
FAX (330) 262-7311
sales@tricorindustrial.com

INDUSTRIAL BRANCH OPERATION
5169 Guernsey Street
Bellaire, Ohio 43906
(740) 676-5010
FAX (740) 676-2401

OHIO METALS DIVISION
3000 Old Airport Road
Wooster, Ohio 44691
(800) 421-5141
(330) 264-3299
FAX (330) 264-1181
sales@tricormetals.com

TEXAS METALS DIVISION
101 S. Trade Center Pkwy.
Conroe, Texas 77385
(888) 987-4267
(936) 273-2661
FAX (936) 273-2669
ho@tricormetals.com

INDUSTRIAL FASTENERS AND SUPPLIES

PREMIUM METALS FABRICATION AND MILL PRODUCTS

CUSTOMER	SOUTHWEST RESEARCH INSTITUTE	**ALLOY**	TITANIUM GR 5
CUSTOMER P.O.#	663618G	**HEAT#**	R8453
TRICOR ORDER #	223826	**DESCRIPTION**	.500" THK PLATE
SHIP DATE	8/15/2006	**MATERIAL SPEC.**	AMS 4911 H;DMS 1592F MIL-T-9046 J; AM 2 AB 1
LBS/FT/PCS	24.8 LBS	**FINISH**	

CHEMICAL ANALYSIS %

C	0.015	**Ti**	BALANCE
H	67/75 (PPM)	**Al**	6.219
Fe	0.150	**Y**	
O	0.176	**Pd**	
N	0.010	**OTHER**	V: 4.000

MECHANICAL PROPERITES

UTI TENSILED	KSi: L: 138/138 T: 161/159	**ELONG%**	L: 14/14 T: 14/14
YIELD	KSi: L: 124/122 T: 147/146	**RA%**	L: 24/22 T: 31/33

REMARKS PRODUCT ANNEALED 1 HR. @ 1400 F. A.C.
MICROSTRUCTURE/IMMERSION ULTRASONICALLY TESTED AND ACCEPTABLE..

THIS MATERIAL DID NOT COME IN CONTACT WITH MERCURY OR DEVICES CONTAINING MERCURY WHILE AT TRICOR METALS TEXAS DIVISION. WE CERTIFY THAT THE CHEMICAL ANALYSIS AND PHYSICAL TEST RESULTS APPLYING ON THE ABOVE ORDER NUMBER ARE CORRECT AND TRUE TO THE BEST OF OUR KNOWLEDGE AND BELIEF.

AUTHORIZED SIGNATURE Connie Leonard

DATE 8/15/06

Specimen Machining Documentation Form

Purchase/Work Order Number			
Material Identification		Ti-7 plate	
Material Heat Number		CN 2775	
CNWRA Requestor		Xihua He	
Vendor		SWRI machine shop	
Specimen Description (CNWRA Drawing Number, ASTM Standard)		Hand drawing, test fixture	
To be Completed Prior to Order		**To be Completed upon Receipt of Order**	
Date	9/7/2006	**Date**	10/18/06
Material Supplied to Vendor (Y/N)	Y	**Remaining Stock Material Returned From Vendor (Y/N)**	Y
Material Marked with Heat Number and Rolling Direction (Y/N)	Y	**Remaining Stock Material Marked with Heat Number and Rolling Direction (Y/N)**	Y
Dimensions of Material stock provided (L x W x H)	10" x 5.5"	**Remaining Stock Material Dimensions (L x W x H)**	10" x 5.5" with cutouts
Specimen Quantity Ordered	4	**Specimen Quantity Received**	4
Dimensional Inspection Required (Y/N)	Y	**Dimensional Inspection Provided (Y/N)**	Y
Marked Containment Provided (Y/N)	Y	**Marked Containment Used (Y/N)**	Y
Documented in Scientific Notebook Number/Page Number			
NCR Number (if applicable)			

Signature

9/18/06
Date

217

X4

Titanium Grade 7 Strip with Threaded Hole

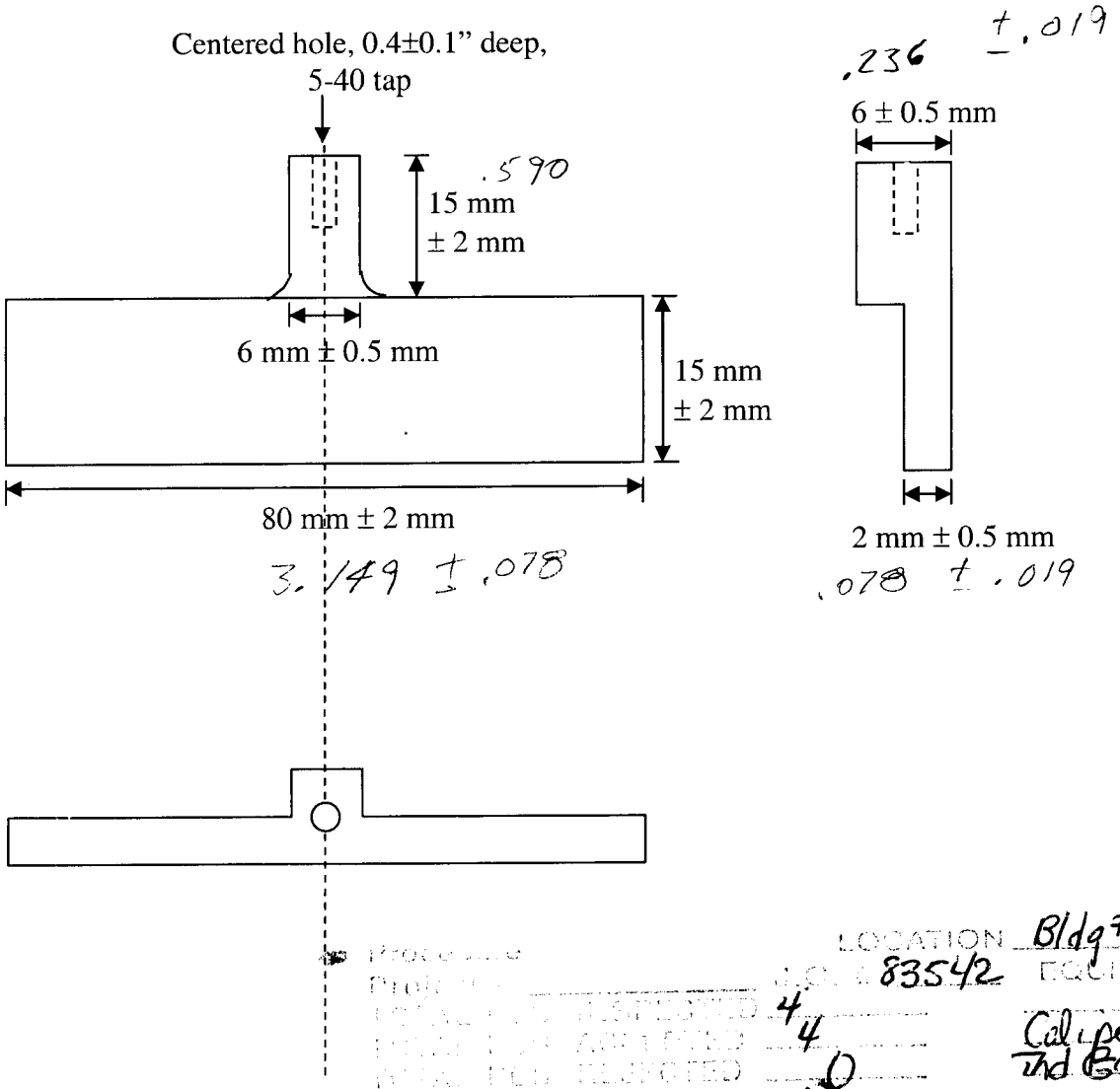

LOCATION Bldg #162
J.O. # 83542 EQUIPMENT
Calipers 005081
Ind Gage 002176
4
4
0
"NR #" IF REJECTS
INSPECTOR
DATE 9/18/06

Xihua He Div. 20

X5194

Charge # OHD20.131
Account # 753-104

CENTER FOR NUCLEAR WASTE REGULATORY ANALYSES

SAMPLE CUSTODY/CONTROL LOG ENTRY FORM

SAMPLE IDENTIFICATION (Mandatory) Titanium Grade 7 HT# 886025

SAMPLE DESIGNATION Ti 7 HT#886025

DESCRIPTION OF SAMPLE (Mandatory) .250" x 12" R/L

1 Piece

REFERENCE TOP OR SCIENTIFIC NOTEBOOK ENTRY

AMOUNT OF SAMPLE 0.250" x 12" = 1 lb. SIZE See Above .25x12"

DATE OF SAMPLE RECEIPT (Mandatory) 9/19/06

DATE OF INITIAL LOG ENTRY (Mandatory) 9/19/06 BY [illegible]

SAMPLE STORAGE LOCATION (Mandatory) Bldg 57

COLLECTION SITE (Reference Maps or Field Notes As Required)

PERSON(S) WHO COLLECTED SAMPLE(S)

SUPPLIER Tri Con Inc. PO# 663783G

OTHER

CNWRA FORM TOP-004

TRICOR
INDUSTRIAL, INC.

CORPORATE OFFICE
3000 Old Airport Rd.
P.O. Box 752
Wooster, Ohio 44691
(800) 421-5141
(330) 264-3299
FAX (330) 262-6678

INDUSTRIAL BRANCH OPERATION
823 West Bowman Street
Wooster, Ohio 44691
(800) 421-5141
(330) 264-3299
FAX (330) 262-7311
sales@tricorindustrial.com

INDUSTRIAL BRANCH OPERATION
3737 Noble Street
Bellaire, Ohio 43906
(740) 676-5010
FAX (740) 676-2401

OHIO METALS DIVISION
3000 Old Airport Road
Wooster, Ohio 44691
(800) 421-5141
(330) 264-3299
FAX (330) 264-1181
sales@tricormetals.com

TEXAS METALS DIVISION
101 S. Trade Center Pkwy.
Conroe, Texas 77385
(888) 987-4267
(936) 273-2661
FAX (936) 273-2669
ho@tricormetals.com

INDUSTRIAL FASTENERS AND SUPPLIES

PREMIUM METALS FABRICATION AND MILL PRODUCTS

TRICOR METALS DIVISION

CERTIFICATE OF TESTS

CUSTOMER: SOUTHWEST RESEARCH INSTITUTE CUSTOMER PO#: 663783G

REPORT DATE: 4/7/06 SHIP DATE: 9/12/06 HEAT #: 886025
LOT/TEST:

SIZE: .250" DIA X 12FT R/L

FINISH: TITANIM BAR MF

MATERIAL SPECS. ASTM B: 348-05
ASME SB: 348-00
EN10204: 3.1.B
ASTM F:

ALLOY: GRADE 7

LBS/FT/PCS: 1LB

ORDER #: 225610

CHEMICAL ANALYSIS %

C: 0.003	H: 0.004	O: 0.09	Ru:
N: 0.004	Fe: 0.03	Ti: BALANCE	Pd: 0.13

MECHANICAL PROPERTIES

KSI-L	KSI-T
YIELD: 42.30	YIELD :
TENSILE: 67.20	TENSILE :
ELONGATION: 34.50	ELONGATION :
RED. OF AREA: 59.80	RED. OF AREA :

FLATTENING:	HYDROSTATIC:
REVERSE FLATTEN:	PNEUMATIC:
FLARE TEST:	HARDNESS:
BEND TEST:	EDDY CURRENT:
S1 BEND TEST:	ULTRASONIC:
ANNEAL: ANNEALED	
REMARKS:	

THIS MATERIAL DID NOT COME IN CONTACT WITH MERCURY OR DEVICES CONTAINING MERCURY AT TRICOR METALS DIVISION. WE CERTIFY THAT THE CHEMICAL ANALYSIS AND PHYSICAL TEST RESULTS APPLYING ON THE ABOVE ORDER NUMBER ARE CORRECT AND TRUE TO THE BEST OF OUR KNOWLEDGE AND BELIEF.

AUTHORIZED SIGNATURE. Judy Way

P A C K I N G L I S T

Order-No	Order-Date	Cust-No	Cust-Po-No / Job-No	Warehouse-Location
225610	09/11/06	804913	663783G	WM WOOSTER METALS

Sold To: SOUTHWEST RESEARCH INSTITUTE
6220 CULEBRA ROAD

SAN ANTONIO TX 78238
USA

Ship To: SOUTHWEST RESEARCH INSTITUTE
6220 CULEBRA ROAD

SAN ANTONIO TX 78238
USA

Ship-Via	Frt-Cod	Ship-Date	Shipping-Instructions
BEST WAY	Ppd	09/12/06	KN PP&ADD MTR'S REQUIRED

Qty Ordered	Qty Shipped	Item-No/Description	Unit-Wght	Uom	Packed By
1.200	1.000	07BAR.250 TI PD RD BAR .250" X 12' R/L ASME SB348/ASTM B348-7 Lot #: 886025 Exp Date: 12/30	.000	LB	.....

Packing List Totals

Qty Ordered - 1.200 Qty Shipped - 1.000 TTL WEIGHT - .00

Specimen Machining Documentation Form

Purchase/Work Order Number			
Material Identification	Ti 7 #886025		
Material Heat Number	# 886025		
CNWRA Requestor	Xihua Hz		
Vendor	SWRI Machine Shop		
Specimen Description (CNWRA Drawing Number, ASTM Standard)	20-06002-01-081 007		
To be Completed Prior to Order		**To be Completed upon Receipt of Order**	
Date	9/21/06	**Date**	10/2/06
Material Supplied to Vendor (Y/N)	Y	**Remaining Stock Material Returned From Vendor (Y/N)**	Y
Material Marked with Heat Number and Rolling Direction (Y/N)	Y	**Remaining Stock Material Marked with Heat Number and Rolling Direction (Y/N)**	Y
Dimensions of Material stock provided (L x W x H)	3 - 6" Rod 3 - 12" Rod 0.25" Rod Pac Cut	**Remaining Stock Material Dimensions (L x W x H)**	Returned 3-6" 3-12 0.25" Rods
Specimen Quantity Ordered	3-6" 3-12" only Threading	**Specimen Quantity Received**	Y
Dimensional Inspection Required (Y/N)	Y	**Dimensional Inspection Provided (Y/N)**	Y
Marked Containment Provided (Y/N)	Y	**Marked Containment Used (Y/N)**	Y

Documented in Scientific Notebook Number/Page Number

for Rod/Specimen Holders

NCR Number (if applicable)

B. [illegible] 10/2/06

Signature Date

222

Darrell S. Dunn SwRI-CNWRA Phone: (210) 522-6090 Fax: (210) 522-5184 e-mail: ddunn@swri.org	Specimen Rods CNWRA Drawing 20-06002-01-081-~~006~~ 007 All Dimensions ± 0.005" unless otherwise specified Note: Item is a test fixture DD 9/4/03	To be completed at time of order: Material: Ti 7 Heat: 886025 Specimen Orientation: Other: Need 5-40 Threaded End

Machine Shop Machined Supplied Rods. They cut threads only.

Supplied Rods undersize on Lengths

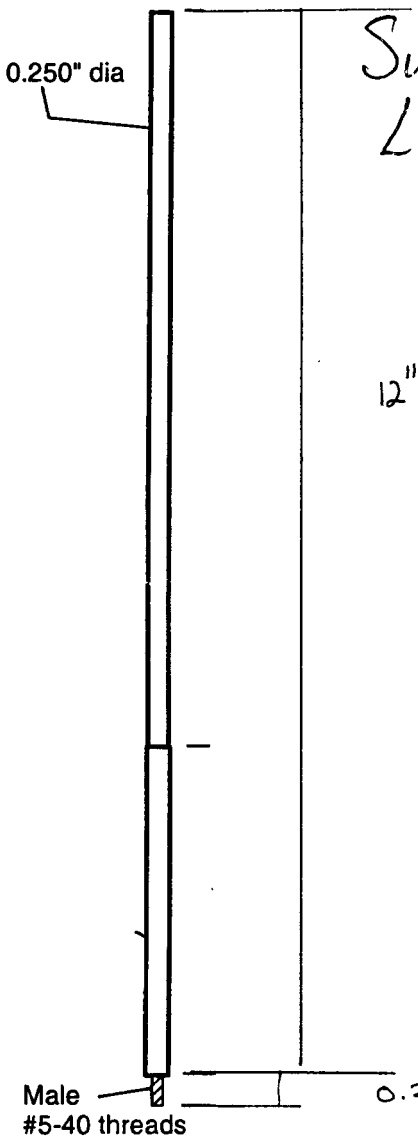

12" ± .300

Act. 11.208
11.547
11.775

12" - 6" Rods
± 0.3

6" ± .300

Act 5.664
5.735
5.736
5.730

0.250" ± 0.05

3 pcs 6"
3 pcs 12
9/21/06

SwRI 24 QA

Initiated by. D. Dunn — Date 9/4/03

Reviewed by V. Jain — Date 9/4/03

QA Approval B. Brient — Date 9/4/03

Specimen Machining Documentation Form

Purchase/Work Order Number			
Material Identification		Titanium Grade 7	
Material Heat Number		CN 2775	
CNWRA Requestor		Xihua He	
Vendor		SwRI machine shop	
Specimen Description (CNWRA Drawing Number, ASTM Standard)		20.06002.01.322.006 20.06002.01.322.010	
To be Completed Prior to Order		**To be Completed upon Receipt of Order**	
Date	11/16/06	**Date**	12/7/06
Material Supplied to Vendor (Y/N)	Y	**Remaining Stock Material Returned From Vendor (Y/N)**	Y
Material Marked with Heat Number and Rolling Direction (Y/N)	Y	**Remaining Stock Material Marked with Heat Number and Rolling Direction (Y/N)**	Y
Dimensions of Material stock provided (L x W x H)	7.5" x 15.5" x 0.5"	**Remaining Stock Material Dimensions (L x W x H)**	Same But with Holes Cut Out 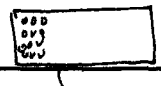
Specimen Quantity Ordered	12 for washers and 6 for bolts & nuts	**Specimen Quantity Received**	Y
Dimensional Inspection Required (Y/N)	Y	**Dimensional Inspection Provided (Y/N)**	Y
Marked Containment Provided (Y/N)	Y	**Marked Containment Used (Y/N)**	Y
Documented in Scientific Notebook Number/Page Number			
NCR Number (if applicable)			

Signature

12/7/06
Date

Xihua He
CNWRA-SwRI
Phone: 210-522-5194
Fax: 210-522-6081
e-mail: xhe@swri.org

SwRI drawing #
20.06002.01.322.006

Titanium Grade 7

Serrated Alloy 22 crevice washer with 24 plateaus

12 for each material

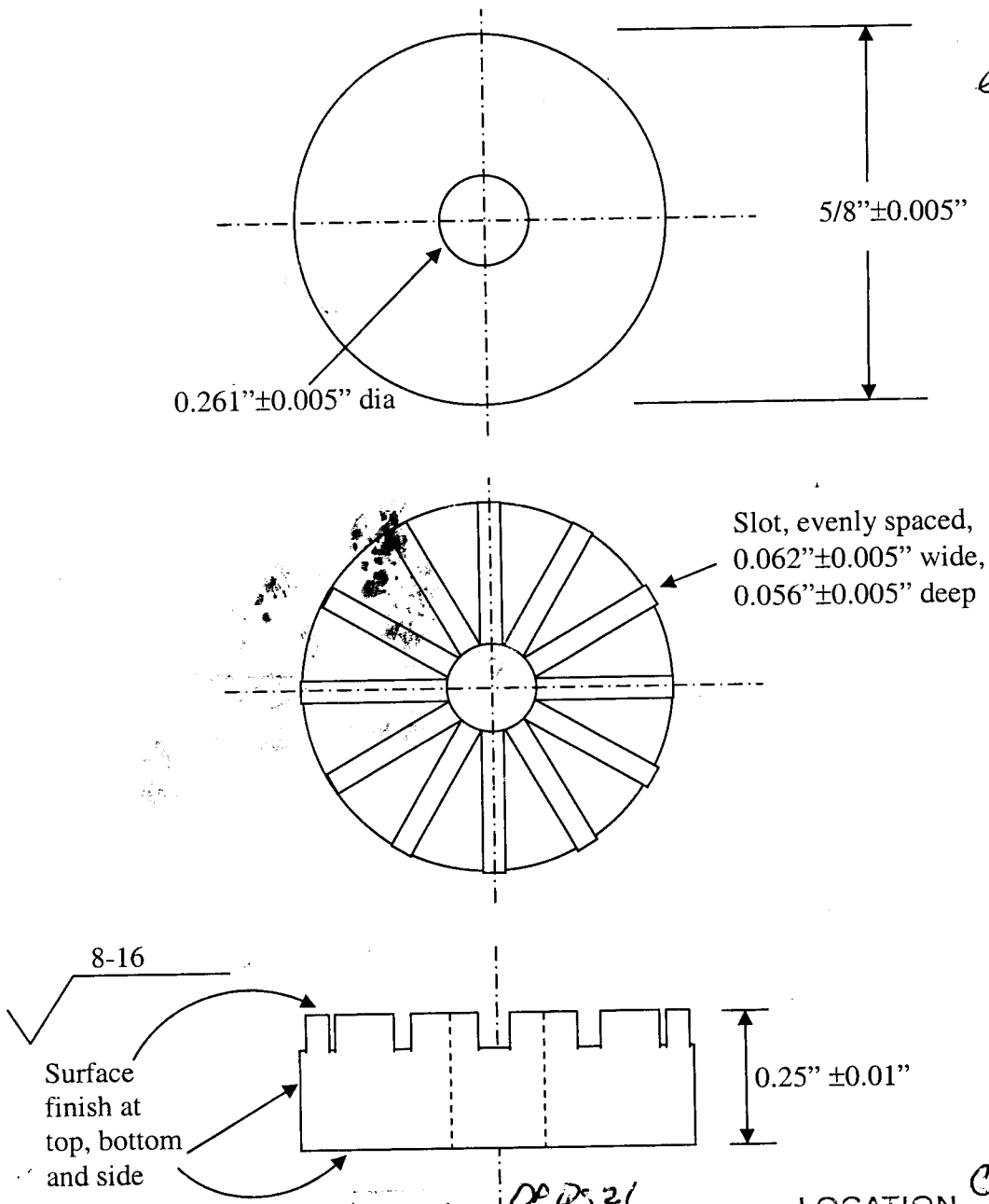

Procedure OP QS 21
Project #
TOTAL PCS. INSPECTED 12
TOTAL PCS. ACCEPTED 12
TOTAL PCS. REJECTED 0
"NR #" IF REJECTED NA

LOCATION CC 31MM
J.O. # 83899-02 EQUIPMENT
Calipers 005081

INSPECTOR SwRI QA
DATE 12-04-06

Initiated by: X. He Date

QA approval: B. Brient Date

Reviewed by: V. Jain Date

Xihua He CNWRA-SwRI Phone: 210-522-5194 Fax: 210-522-6081 e-mail: xhe@swri.org	CNWRA drawing # 20.06002.01.322.010	To be completed at time of order Material: Ti 7 HT# Heat: CN2775 Specimen orientation: Other:

Bolts and nuts for multiple crevice assembly

Alloy 22

Titanium Grade 7

6 sets for each material

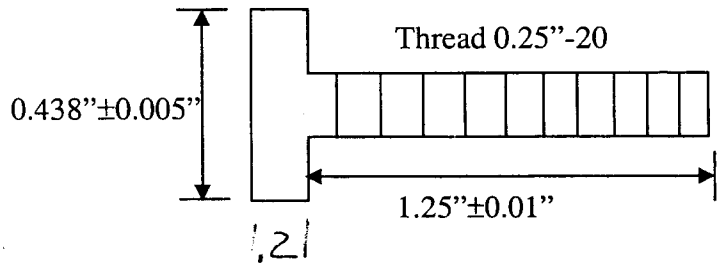

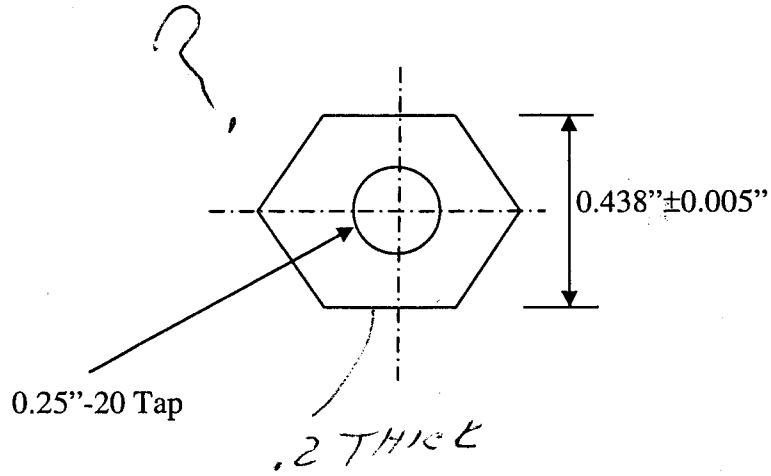

Procedure OP QS21 LOCATION CC37 MS
Project # J.O. #83818-02 EQUIPMENT
TOTAL PCS. INSPECTED 6EA Calipers 005081
TOTAL PCS. ACCEPTED 6EA Thd Gage 002176
TOTAL PCS. REJECTED 0
"NR #" IF REJECTS NA
SwRI 24 QA
INSPECTOR DATE 12-04-06

Initiated by: X. He Date

Reviewed by: V. Jain Date

QA approval: B. Brient Date

CENTER FOR NUCLEAR WASTE REGULATORY ANALYSES

SAMPLE CUSTODY/CONTROL LOG ENTRY FORM

SAMPLE IDENTIFICATION (Mandatory) Ti Gr5 HT# R8453

SAMPLE DESIGNATION

DESCRIPTION OF SAMPLE (Mandatory) 12" x 12" x 0.500" Plates

Marked with Grain And HT # R8453

REFERENCE TOP OR SCIENTIFIC NOTEBOOK ENTRY

AMOUNT OF SAMPLE 3 Plates SIZE .500" x 12" x 12"

DATE OF SAMPLE RECEIPT (Mandatory) 12/7/06

DATE OF INITIAL LOG ENTRY (Mandatory) 12/7/06 BY Brian K. Derby

SAMPLE STORAGE LOCATION (Mandatory) Blog 57

COLLECTION SITE (Reference Maps or Field Notes As Required)

PERSON(S) WHO COLLECTED SAMPLE(S)
Xihua He

SUPPLIER Tai Cor Industry

OTHER

CNWRA FORM TOP-004

227

P A C K I N G L I S T

Order-No	Order-Date	Cust-No	Cust-Po-No / Job-No	Warehouse-Location
231206	12/04/06	804913	764387G	HO HOUSTON METALS

Sold To: SOUTHWEST RESEARCH INSTITUTE
6220 CULEBRA ROAD

SAN ANTONIO TX 78238
USA

Ship To: SOUTHWEST RESEARSH INSTITUTE
9503 W. COMMERCE
SHIPPING & RECEIVING BLDG 242
SAN ANTONIO TX 78227-1301
USA

Ship-Via	Frt-Cod	Ship-Date	Shipping-Instructions
UPS/GRND/INS'D	Ppd	12/05/06	BA/DA MTRS REQD CT 3 PIECES @ 12" X 12" ATTN: XIHUA HE BLDG 57

Qty Ordered	Qty Shipped	Item-No/Description	Unit-Wght	Uom	Packed By
37.500	36.700	05PLT.500 TI PLATE .500" X 12" X 12" ASTM B265-5 Lot #: R8453 Exp Date: 12/30	.000	LB	.....

Packing List Totals

Qty Ordered - 37.500 Qty Shipped - 36.700 TTL WEIGHT - .00

CERTIFICATE OF TESTS

TRICOR INDUSTRIAL, INC.

CUSTOMER	SOUTHWEST RESEARCH INST	**ALLOY**	TITANIUM GR 5
CUSTOMER P.O.#	764387G	**HEAT#**	R8453
TRICOR ORDER #	231206	**DESCRIPTION**	.500" THK PLATE
SHIP DATE	12/5/2006	**MATERIAL SPEC.**	AMS 4911 H;DMS 1592F MIL-T-9046 J; AM 2 AB 1
LBS/FT/PCS	36.7 LBS	**FINISH**	

CORPORATE OFFICE
3000 Old Airport Rd.
P.O. Box 752
Wooster, Ohio 44691
(800) 421-5141
(330) 264-3299
FAX (330) 262-6678

INDUSTRIAL BRANCH OPERATION
823 West Bowman Street
Wooster, Ohio 44691
(800) 421-5141
(330) 264-3299
FAX (330) 262-7311
sales@tricorindustrial.com

INDUSTRIAL BRANCH OPERATION
5169 Guernsey Street
Bellaire, Ohio 43906
(740) 676-5010
FAX (740) 676-2401

OHIO METALS DIVISION
3000 Old Airport Road
Wooster, Ohio 44691
(800) 421-5141
(330) 264-3299
FAX (330) 264-1181
sales@tricormetals.com

TEXAS METALS DIVISION
101 S. Trade Center Pkwy.
Conroe, Texas 77385
(888) 987-4267
(936) 273-2661
FAX (936) 273-2669
ho@tricormetals.com

INDUSTRIAL FASTENERS AND SUPPLIES

PREMIUM METALS FABRICATION AND MILL PRODUCTS

CHEMICAL ANALYSIS %

C	0.015	**Ti**	BALANCE
H	67/75 (PPM)	**Al**	6.219
Fe	0.150	**Y**	
O	0.176	**Pd**	
N	0.010	**OTHER**	V: 4.000

MECHANICAL PROPERITES

UTI TENSILED	KSi: L: 138/138 T: 161/159	**ELONG%**	L: 14/14 T: 14/14
YIELD	KSi: L: 124/122 T: 147/146	**RA%**	L: 24/22 T: 31/33

REMARKS PRODUCT ANNEALED 1 HR. @ 1400 F. A.C. MICROSTRUCTURE/IMMERSION ULTRASONICALLY TESTED AND ACCEPTABLE..

THIS MATERIAL DID NOT COME IN CONTACT WITH MERCURY OR DEVICES CONTAINING MERCURY WHILE AT TRICOR METALS TEXAS DIVISION. WE CERTIFY THAT THE CHEMICAL ANALYSIS AND PHYSICAL TEST RESULTS APPLYING ON THE ABOVE ORDER NUMBER ARE CORRECT AND TRUE TO THE BEST OF OUR KNOWLEDGE AND BELIEF.

AUTHORIZED SIGNATURE Connie Leonard

DATE 12/5/06

Specimen Machining Documentation Form

Purchase/Work Order Number			
Material Identification		Ti Grade 7	
Material Heat Number		CN2775	
CNWRA Requestor		Xihua He	
Vendor		SwRI machine shop	
Specimen Description (CNWRA Drawing Number, ASTM Standard)		20.01402.571.019	
To be Completed Prior to Order		**To be Completed upon Receipt of Order**	
Date	10/28/07	**Date**	1/24/08
Material Supplied to Vendor (Y/N)	Y	**Remaining Stock Material Returned From Vendor (Y/N)**	Y
Material Marked with Heat Number and Rolling Direction (Y/N)	Y	**Remaining Stock Material Marked with Heat Number and Rolling Direction (Y/N)**	Y
Dimensions of Material stock provided (L x W x H)	13"x7.5"x0.5"	**Remaining Stock Material Dimensions (L x W x H)**	13"x7.5"x0.5" with 15 rectangular cuts
Specimen Quantity Ordered	12	**Specimen Quantity Received**	12
Dimensional Inspection Required (Y/N)	Y	**Dimensional Inspection Provided (Y/N)**	Y
Marked Containment Provided (Y/N)	Y	**Marked Containment Used (Y/N)**	Y
Documented in Scientific Notebook Number/Page Number 794/33			
NCR Number (if applicable)			

He Xihua 1/24/08

Signature Date

Cylindrical Test Specimen

CNWRA Drawing 20.01402.571.019

#5-40 thread centered minimum 0.250" deep

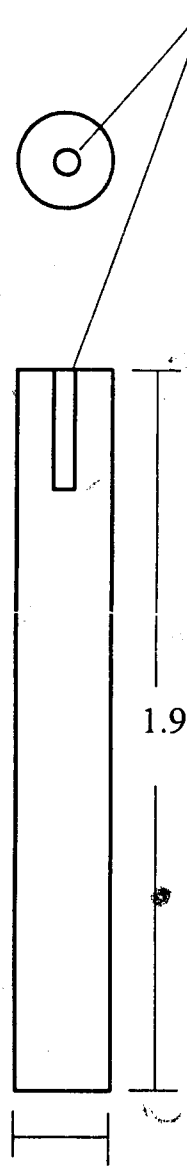

X 12

requested by
Xi'hua He
Div. 20
ext. 5194

Procedure 1QS-W1-521 LOCATION MC-31
Project # J.C. # 85162 EQUIPMENT
TOTAL PCS. INSPECTED 12 Cal 005081
TOTAL PCS. ACCEPTED 12 Ind Gage 002176
TOTAL PCS. REJECTED 0
"NR #" IF REJECTS NA
INSPECTOR SWRI 24 QA DATE 1-14-08

Darrell A. Dunn 10/15/01
Initiated by. D. Dunn Date

Mark R. Ehnstrom for 10/15/01
QA Approval B. Mabrito Date

10/15/01
Reviewed by V. Jain Date

CENTER FOR NUCLEAR WASTE REGULATORY ANALYSES

SAMPLE CUSTODY/CONTROL LOG ENTRY FORM

SAMPLE IDENTIFICATION (Mandatory) Titanium Grade 29 pipe (16" OD X 0.56" wall)

SAMPLE DESIGNATION Titanium Grade 29 Heat # 00192DB

DESCRIPTION OF SAMPLE (Mandatory)

Titanium Grade 29 pipe (16" OD X 0.56" wall) cut in 90° pieces. The length is 1 ft. The chemical composition and mechanical properties meet ASTM standard B861. The material is β transformed

REFERENCE TOP OR SCIENTIFIC NOTEBOOK ENTRY

AMOUNT OF SAMPLE 12" long x 16" OD X 0.56" wall pipe SIZE

DATE OF SAMPLE RECEIPT (Mandatory) 12/18/06

DATE OF INITIAL LOG ENTRY (Mandatory) 12/18/06 BY Xihua He

SAMPLE STORAGE LOCATION (Mandatory) Bldg. 57

COLLECTION SITE (Reference Maps or Field Notes As Required)

PERSON(S) WHO COLLECTED SAMPLE(S)

SUPPLIER Timet

OTHER

CNWRA FORM TOP-004

232

ASTM B861-06

TIMET

Titanium Metals Corporation

100 Titanium Way, Toronto, OH 43964
Telephone (740) 537-5694, Fax (740) 537-5759

CERTIFICATE ID	CUSTOMER	PURCHASE ORDER

HEAT NUMBER	GRADE	PRODUCT DESCRIPTION
00192DB	TIMETAL®6-4 RU	16"ODx.566" PIPE

SPECIFICATIONS

CHEMICAL ANALYSIS
(Weight Percent)

	C	Fe	N	Al	V	O
00192DB-TOP	0.02	0.18	0.01	6.30	4.08	0.11
00192DB-BOT	0.02	0.16	0.01	6.32	3.98	0.11

	Ru
00192DB-TOP	0.13
00192DB-BOT	0.12

	H2 (ppm)	LOCATION	METHOD
00192DB-7431-52B	12	PIPE	HOT EXT.
00192DB-7431-53F	19	PIPE	HOT EXT.

Balance titanium.
Residual elements each less than 0.15% maximum, 0.40% maximum total.

MECHANICAL PROPERTIES

Young's Modulus

	TENS DIRECTION	RESULT, Mpsi
00192DB-7431-52B	L	16.5
00192DB-7431-53F	L	15.8

Room Temperature Tensile Results

	TENSILE DIR	YS KSI	TS KSI	% EL	% RA	TESTED B
00192DB-7431-52B	L	111	129	13.6	32.4	-
00192DB-7431-53F	L	110	130	12.9	23.4	-

COMPLIANCE STATEMENTS

1. 100% ultrasonic inspected for external defects in the transverse direction. Calibration reflector was OD transverse notch 12.5% max. deep X .040" max wide X 2.0" max long. 100% continuous wall thickness scan normal to OD surface.
2. 100% drift testing performed and acceptable; drift standard size utilized: 14.50"
3. Material is free of alpha case and other harmful contaminants.

ANSI-RAB QMS ACCREDITED
American Quality Assessors
REGISTERED ISO 9002

NADCAP
Performance Review Institute
Accredited
NDT & LAB

Specimen Machining Documentation Form			
Purchase/Work Order Number		~~SwRI machine shop~~	
Material Identification		Titanium Grade 29	
Material Heat Number		00192DB	
CNWRA Requestor		Xihua He	
Vendor		SwRI machine shop	
Specimen Description (CNWRA Drawing Number, ASTM Standard)		20.01402-571.019	
To be Completed Prior to Order		To be Completed upon Receipt of Order	
Date	11/2/07	Date	11/13/07
Material Supplied to Vendor (Y/N)	Y	Remaining Stock Material Returned From Vendor (Y/N)	Y
Material Marked with Heat Number and Rolling Direction (Y/N)	Y	Remaining Stock Material Marked with Heat Number and Rolling Direction (Y/N)	Y
Dimensions of Material stock provided (L x W x H)	1/4 of pipe 16"OD x 0.5" thickness	Remaining Stock Material Dimensions (L x W x H)	1/4 of pipe with one strip cut
Specimen Quantity Ordered	12	Specimen Quantity Received	12
Dimensional Inspection Required (Y/N)	Y	Dimensional Inspection Provided (Y/N)	~~12~~ Y
Marked Containment Provided (Y/N)	Y	Marked Containment Used (Y/N)	Y
Documented in Scientific Notebook Number/Page Number			
NCR Number (if applicable)			

He Xihua 11/13/07

Signature Date

Cylindrical Test Specimen

CNWRA Drawing 20.01402.571.019

X12

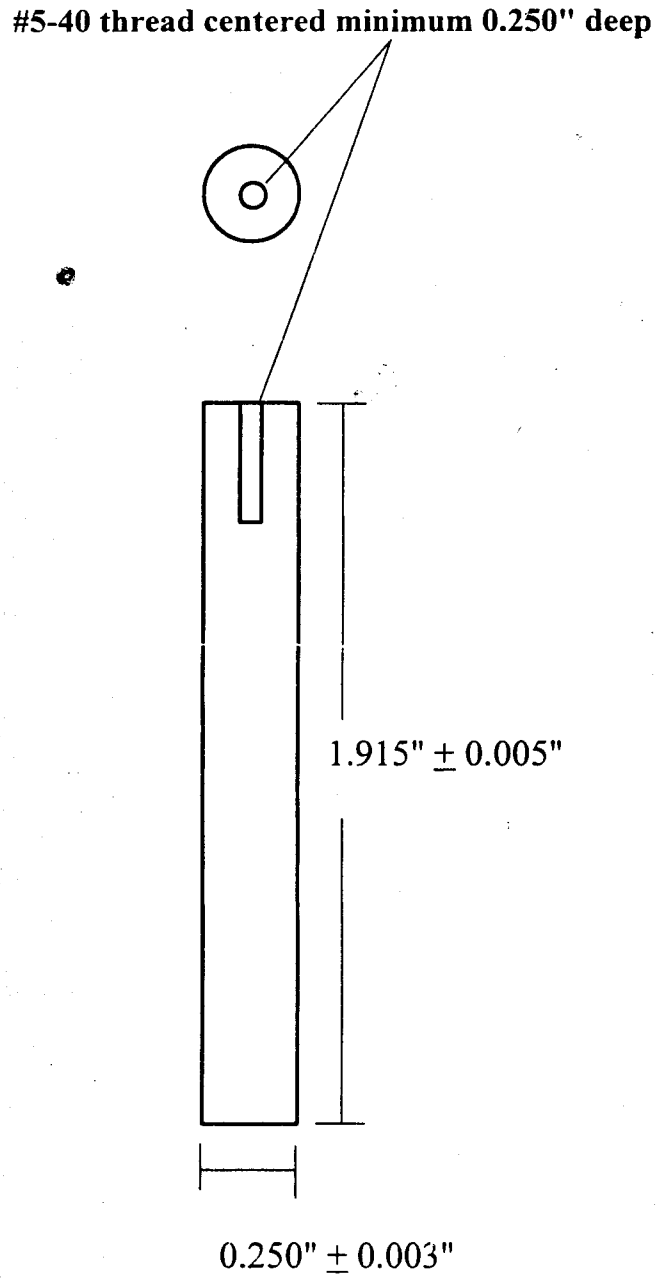

Procedure 105-W1-821
Project # 12
TOTAL PCS. INSPECTED 12
TOTAL PCS. ACCEPTED 12
TOTAL PCS. REJECTED 0
"NR #" IF REJECTED NA
INSPECTOR
LOCATION CC31 MS
EQUIPMENT Caliper 005081 Thd Gage 003176
DATE 11/13/07

Initiated by. D. Dunn 10/15/01 Date

QA Approval B. Mabrito for 10/15/01 Date

Reviewed by V. Jain 10/15/01 Date

CENTER FOR NUCLEAR WASTE REGULATORY ANALYSES

SAMPLE CUSTODY/CONTROL LOG ENTRY FORM

SAMPLE IDENTIFICATION (Mandatory) Ti Grade 5

SAMPLE DESIGNATION Ti Grade 5 HT#A21A

DESCRIPTION OF SAMPLE (Mandatory)

(18) 1.75" x 6" x 8" Blocks of Ti 5 HT #A21A

REFERENCE TOP OR SCIENTIFIC NOTEBOOK ENTRY

NB# 770 pg# 45-51

AMOUNT OF SAMPLE 18 pieces or Blocks SIZE 1.75" Thick 6"x8"

DATE OF SAMPLE RECEIPT (Mandatory) 3/20/07

DATE OF INITIAL LOG ENTRY (Mandatory) 3/20/07 BY [illegible] (Brian K. Deeby)

SAMPLE STORAGE LOCATION (Mandatory) Bldg 57

COLLECTION SITE (Reference Maps or Field Notes As Required)

PERSON(S) WHO COLLECTED SAMPLE(S)

SUPPLIER Titanium Industries Inc. Ref# NRC0202012 same RN#

OTHER Astm B265

Titanium Industries Inc. Phone# 562-906-8188 fax 562-906-8198

CNWRA FORM TOP-004

SOUTHWEST RESEARCH INSTITUTE
9503 WEST COMMERCE
SHIPPING & RECEIVING BUILDING 242
SAN ANTONIO, TX 78227-1301
Tel: 210-522-5829 Fax: 210-522-3964

SOUTHWEST RESEARCH INSTITUTE
P.O. DRAWER 28510
SAN ANTONIO, TX 78228-0510

B I L L O F L A D I N G

1) Our Order TEX- 317- 1 Your PO # 764783G
TITANIUM AERO PLATE 6AL-4V ASTM B265 GRADE 5
1.750" X 6.0000"(+.125/-0) X 8.0"(+.125/-0)
CONTRACT: NRC0202012
AOP: 704-000 1.20.01

Ht# A21A

	Tag No	PCS	Wt LBS
[illegible]	21780	6	87
[illegible] 1.750")	21780C	6	86
[illegible] 750")	21780D	6	85
	Total:	18	258

	Tags	Pcs	Wt LBS
TOTAL:	3	18	258

SHIPPING:
(1) BOX @ 274 LBS GROSS
(18) PCS @ 258 LBS NET HEAT# A21A
TARE: 16 LBS
DIMS: 10"X 9"X 48" LONG
****
**********COLLECT**********
****

DIM / QTY / PCS / WT / TRS / P/C / QCS
CLASS 70 RELEASE VALUE @ $.40/LB

6" x 8" x 1.75"
3/20/07

RECEIVED, subject to the classification and tariffs in effect on the date of receipt by the carrier of the property described in the Original Bill of Lading.
The property described above, in apparent good order, except as noted (contents and condition of contents of packages unknown), marked, consigned, and destined as indicated below, which said carrier (the word carrier being understood throughout this contract as meaning any person or corporation in possession of the property under the contract) agrees to carry to its usual place of delivery at said destination, if on its route, otherwise to deliver to another carrier on the route to said destination. It is mutually agreed as to each carrier of all or any of said property over all or any portion of said route to destination, and as to each party at any time interested in all or any of said property, that every service to be performed hereunder shall be subject to all the terms and conditions of the Uniform Domestic Straight Bill of Lading set forth (1) in Official, Southern, Western and Illinois Freight Classifications in effect on the date hereof, if this is a rail or a rail-water shipment, or (2) in the applicable motor carrier classification or tariff if this is a motor carrier shipment.
Shipper hereby certifies that he is familiar with all the terms and conditions of the said bill of lading, including those on the back thereof, set forth in the classification or tariff which governs transportation of this shipment, and the said terms and conditions are hereby agreed to by the shipper and accepted for himself and his assigns.

Page: 1 .... Last

NS MEMORANDUM Is an acknowledgement that a bill of lading has been issued and is not the Original Bill of Lading, nor a copy or duplicate, covering the property named herein, and is intended solely for filing or record.

CARRIER

FREIGHT
Prepaid ☐
Collect ☒
COD ☐ $ ____

SIGNATURE OF CONSIGNOR
X

AGENT PER (Driver's Signature)
X

SHIPPER'S CERTIFICATION: This is to certify that the above-named materials are properly classified, described, packaged, marked and labeled, and are in proper condition for transportation according to the applicable regulations of the Department of Transportation.

SIGNATURE TITLE

* If the shipment moves between two ports by a carrier by water, the law requires that the bill of lading shall state whether it is "carrier's or shipper's weight."
† Shipper's imprints in lieu of stamp; not a part of Bill of Lading approved by the Interstate Commerce Commission.
Note — Where the rate is dependent on value, shippers are required to state specifically in writing the agreed or declared value of the property.
The agreed or declared value of the property is hereby specifically stated by the shipper to be not exceeding ____ cents per pound.

If charges are to be prepaid, write or stamp here, "To be Prepaid."

RECEIVED $

To apply in payment of the charges On the property described herein.

AGENT OR CASHIER
(The signature here acknowledges only the amount prepaid.)

CHARGES ADVANCED $

236

Consigned To: (001)
SOUTHWEST RESEARCH INSTITUTE
9503 WEST COMMERCE
SHIPPING & RECEIVING BUILDING 242
SAN ANTONIO, TX 78227-1301
Tel: 210-522-5829 Fax: 210-522-3964

Sold To: (4625)
SOUTHWEST RESEARCH INSTITUTE
P.O. DRAWER 28510
SAN ANTONIO, TX 78228-0510

B I L L O F L A D I N G

1) Our Order TEX- 317- 1 Your PO # 764783G
TITANIUM AERO PLATE 6AL-4V ASTM B265 GRADE 5
1.750" X 6.0000"(+.125/-0) X 8.0"(+.125/-0)
CONTRACT: NRC0202012
AOP: 704-000 1.20.01

Heat Number	Tag No	PCS	Wt LBS
A21A(1.750")	21780	6	87
A21A(1.750")	21780C	6	86
A21A(1.750")	21780D	6	85
	Total:	18	258

	Tags	Pcs	Wt LBS
TOTAL:	3	18	258

SHIPPING:
(1) BOX @ 274 LBS GROSS
(18) PCS @ 258 LBS NET HEAT# A21A
TARE: 16 LBS
DIMS: 10"X 9"X 48" LONG
****
**********COLLECT**********
****

DIM ___ QTY ___ PCS ___ WT ___ TRS ___ P/C ___ QCS ___
CLASS 70 RELEASE VALUE @ $.40/LB

RECEIVED, subject to the classification and tariffs in effect on the date of receipt by the carrier of the property described in the Original Bill of Lading.
The property described above, in apparent good order, except as noted (contents and condition of contents of packages unknown), marked, consigned, and destined as indicated below, which said carrier (the word carrier being understood throughout this contract as meaning any person or corporation in possession of the property under the contract) agrees to carry to its usual place of delivery at said destination, if on its route, otherwise to deliver to another carrier on the route to said destination. It is mutually agreed as to each carrier of all or any of said property over all or any portion of said route to destination, and as to each party at any time interested in all or any of said property, that every service to be performed hereunder shall be subject to all the terms and conditions of the Uniform Domestic Straight Bill of Lading set forth (1) in Official, Southern, Western and Illinois Freight Classifications in effect of the date hereof, if this is a rail or a rail-water shipment, or (2) in the applicable motor carrier classification or tariff if this is a motor carrier shipment.
Shipper hereby certifies that he is familiar with all the terms and conditions of the said bill of lading, including those of the back thereof, set forth in the classification or tariff which governs transportation of this shipment, and the said terms and conditions are hereby agreed to by the shipper and accepted for [illegible]

Page: 1 .... Last

THIS MEMORANDUM is an acknowledgement that a bill of lading has been issued and is not the Original Bill of Lading, nor a copy or duplicate, covering the property named herein, and is intended solely for filing or record.

SIGNATURE OF CONSIGNOR	CARRIER	FREIGHT
X	AGENT PER (Driver's Signature) X	Prepaid ☐ Collect ☒ COD ☐ $

SHIPPERS CERTIFICATION: This is to certify that the above-named materials are properly classified, described, packaged, marked and labeled, and are in proper condition for transportation according to the applicable regulations of the Department of Transportation.

SIGNATURE TITLE

* If the shipment moves between two ports by a carrier by water, the law requires that the bill of lading shall state whether it is "carrier's or shipper's weight."
† Shipper's imprints in lieu of stamp; not a part of Bill of Lading approved by the Interstate Commerce Commission.
Note — Where the rate is dependent on value, shippers are required to state specifically in writing the agreed or declared value of the property.
The agreed or declared value of the property is hereby specifically stated by the shipper to be not exceeding class 70 rate .40 CENTS PER POUND.

If charges are to be prepaid, write or stamp here, "To be Prepaid."	RECEIVED $ To apply in payment of the charges On the property described herein.	AGENT OR CASHIER (The signature here acknowledges only the amount prepaid.)	CHARGES ADVANCED $

237

238

Traveler(s)		Heat #	Ingot#
37485	B	A21A	

CERTIFICATE OF TEST

Customer SOUTHWEST RESEARCH INSTITUTE
PO# 7647839
SO# TEX-317
Wgt. 258 Pcs. 18

Prof Rev 1

ALLVAC
P.O. Box 460 530 34th Avenue, SW
Albany, OR 97321-0580
Phone (541) 967-9000

Customer Name	Purchase Order	Size	Alloy
TITANIUM INDUSTRIES, INC.	CRP-26609	SEE BELOW	ALLVAC 6-4

	PCS	Weight
Rockaway Service Center 18 Green Pond Road Rockaway, NJ	1	2115 lbs.

Completion Date: 03/06/2007 Quality Auditor: Todd Langer Todd E Langer

SPECIFICATIONS

AMS 2631	B	CLASS A1	AMS 4911	J	
AMS-STD-2154	09/05	TYPE 1 CLASS A	AMS-T-9046	A	CODE AB-1 COND. A
ASTM B265	2006B	GRADE 5	ASTM F1472	2002A	
BS 2TA11	1974		BS 7252 PART 3	05/01/97	ALLOY 6-4
BS TA56	1974	AM.1	DMS 1592	G	
ISO 5832-3	3	ALLOY 6-4	LN 9297	91	AMD A1
MIL-STD-2154	09/30/82	TYPE 1 CLASS A	MIL-T-9046	J AM2	CODE AB-1 COND. A
S-1000	01/03/2005		S-400	09/01/2006	

PLATE ID / DIMENSIONS:
A2 - 1.750" X 51.3125" X 143.375"

TI
QA
15

HEADER REMARKS

THIS PLATE WAS MANUFACTURED AND TESTED UNDER LOT# 37485A. IT HAS BEEN TRANSFERRED TO THIS TRAVELER FOR THE PURPOSE OF SHIPMENT.

239

Traveler(s)		Heat #	Ingot#
37485	B	A21A	

ALLVAC P.O. Box 460 530 34th Avenue, SW Albany, OR 97321-0580 Phone (541) 967-9000

HEADER REMARKS

This material was manufactured and tested as rolled plate in accordance with the requirements of the plate product specification(s) called out by the purchase order for said material. The test data reported for this product, or portions cut/sectioned from this product, also demonstrates the products capablility of meeting the testing requirements of the bar product specification(s) called out by the purchase order for said material; as they may be applicable to and capable of the product sizes provided. Required test specimen orientations and locations are limited to the dimensions of the parent rolled plate product.

CHEMISTRY

CR EQ = Chromium Equiv Cb = Nb

	C	C Tested At	Si	Mn	Mo	Ti	Al	Ti+Al	V	Fe	Cu	XRF Tested At
TOP	.016	WAH CHANG	.02	<.01	<.01	BAL	6.12	-	3.99	.20	<.01	WAH CHANG
BOTTOM	.016	WAH CHANG	.01	<.01	<.01	BAL	6.12	-	3.88	.16	<.01	WAH CHANG

	B	B Tested At	Zr	Y	Y Tested At	O	N	O/N Tested At	Sn	Sn Tested At	Cr	Cb	Ta	Ni
TOP	<.01	WAH CHANG	<.01	<.0005	WAH CHANG	.1770	.0052	WAH CHANG	<.01	WAH CHANG	.02	<.01	<.01	.02
BOTTOM	<.01	WAH CHANG	<.01	<.0005	WAH CHANG	.1930	.0058	WAH CHANG	<.01	WAH CHANG	.02	<.01	<.01	.01

	H
PLATE A2	.0082

CHEMISTRY REMARKS

Chemistry tested at ALLVAC unless otherwise noted.

BETA TRANSUS CALCULATED BY CHEMISTRY:
TOP = 1811F
BOTTOM = 1824F

Wah Chang/GE Aircraft Engine Code 91974 applies.

240

Traveler(s)		Heat #	Ingot#
37485	B	A21A	

ALLVAC P.O. Box 460 530 34th Avenue, SW Albany, OR 97321-0580 Phone (541) 967-9000

CHEMISTRY REMARKS

Note: Metallics are analyzed by ICP, gases are analyzed by inert gas fusion or combustion.

As Shipped Tensile Test

Operation	Ingot	Heat Treat Code	Test Dir	Temp F	UTS ksi	.2% Yield ksi	.02% Yield ksi	%EL 4D	%EL 5D	%RA	Gage Length 4D	Gage Length 5D	Tensile Diameter	Tested At
		VCF2	LM	ROOM	145.4	136.3		18.9		31.4	1.001		0.2535	ALLVAC MONROE
		VCF2	LTM	ROOM	146.5	137.0		14.5		26.2	1.001		0.248	ALLVAC MONROE
		VCF2	LM	ROOM	142.4	133.7			20.6	35.0		1.107	0.2245	ALLVAC MONROE
		VCF2	LTM	ROOM	143.3	135.4			16.7	35.1		1.107	0.221	ALLVAC MONROE

Test Dir: L = Longitudinal, T = Transverse, ST = Short Transverse, LT = Long Transverse,
TC = Transverse Center At Size, TM = Transverse Mid-Radius At Size,
PC = Pancake, DB = Drawbar, PD = Paddle, TT = Top Transverse At Size,
BT = Bottom Transverse At Size, LC = Long Center, TX = Top Transverse Mid-Radius At Size,
LM = Longitudinal Mid Radius, LS = Longitudinal Surface, TS = Transverse Surface
Operation: SUPER = Crosshead Sep Rate of .10 inches/minute

TENSILE/STRESS RUPTURE HEAT TREATMENT

HT Code: VCF2

Location	Temp F	Hours	Mins	Furnace Cool Rate Per Hrs (F)	Cool Code	
PLANT	1450	6			FC	VCF 6 HRS. MIN.

METALLOGRAPHY

Microstructure evaluated in accordance with the referenced specifications and found acceptable.
Microstructure evaluated and found acceptable to to ETTC-2 Figures A5, & A6.
Material evaluated and determined to be free of alpha case.

CONDITION SHIPPED

CONDITION SHIPPED

HEAT TREATMENT: VCF ANNEALED AT 1450F (+/- 25F) FOR 6 HOURS MINIMUM
SURFACE CONDITION: DESCALED
Hot Rolling performed at Allgheny Ludlum (Washington, PA)
Heat Treatment and Final Inspection performed at Rome Metals (Monaca, PA)

REMARKS

Material has been produced, sampled, inspected, and tested in accordance with the customer purchase order and referenced specifications and conforms to the requirements unless otherwise noted in this certificate of test.

Any deviations to specification or customer purchase order requirements relative to testing, test values, hot working fixed practices, have been resolved in writing with customer prior to shipment.

The recording of false, fictitious, or fraudulent statements or entries on this document may violate Federal statutes, including but not limited to Title 18, Chapter 47 of the United States Code, and may be punishable as a felony.

If customer purchase order does not specifically reference a revision to a specification, Allvac will work to the latest revision on file and in effect at time of order placement.

Test methods are per the latest ASTM Standards, currently recognized industry practices; or as agreed upon between Allvac and customer.

Any chemical elements analyzed and found to have values below the actual limits of detection may be reported as < less than or reported at the detection level.

When values are reported to the significant places called for in the specifications, rounding will be done in accordance with ASTM E-29.

This is to certify that during manufacturing, handling, testing and inspection, this material did not come in direct contact with mercury or any device employing a single boundary of containment.

This Certificate of Test shall not be reproduced except in full, without the written approval of Allvac Quality.

No weld repair has been performed on this material.

Material Safety Data Sheets (MSDS) - View or print from our site: www.allvac.com. Printed copies available on request from the Allvac Sales Department.

Allvac products have not come in contact with radioactive, fertile or fissionable materials during manufacturing or processing.

Melt source in compliance with DFAR 252.225-7014, Alternate 1.

SPECIAL REMARKS

Material melted and manufactured in the United States of America.

INGOT SOURCE: ATI ALLVAC (ALBANY, OR)

Allvac Laboratories approved to S400 (Certified Materials Test Laboratory - Metallic Materials).
VENDOR NO. 87012

This material has been produced and qualified in accordance with the manufacturing and approval requirements of DMS 1592 and DMS 2442.

Specimen Machining Documentation Form

Purchase/Work Order Number			
Material Identification		Ti 5 HTA21A	
Material Heat Number		A21A	
CNWRA Requestor		Ken Chiang	
Vendor		Swai Machine Shop	
Specimen Description (CNWRA Drawing Number, ASTM Standard)		Div 18 Drawing K. Aricisak	
To be Completed Prior to Order		To be Completed upon Receipt of Order	
Date	4/20/07	Date	
Material Supplied to Vendor (Y/N)	Y	Remaining Stock Material Returned From Vendor (Y/N)	No Stock Remained
Material Marked with Heat Number and Rolling Direction (Y/N)	Y	Remaining Stock Material Marked with Heat Number and Rolling Direction (Y/N)	Y
Dimensions of Material stock provided (L x W x H)	1.75" x 6" x 8" Sent 9 Blocks	Remaining Stock Material Dimensions (L x W x H)	—
Specimen Quantity Ordered	9	Specimen Quantity Received	9
Dimensional Inspection Required (Y/N)	Y	Dimensional Inspection Provided (Y/N)	Y
Marked Containment Provided (Y/N)	No	Marked Containment Used (Y/N)	Marked Box
Documented in Scientific Notebook Number/Page Number			
NCR Number (if applicable)			

Signature: [signature] Date: 4/20/07

247

REVISIONS			
REV	SHT	DESCRIPTION	DATE
A	-	INITIAL RELEASE	

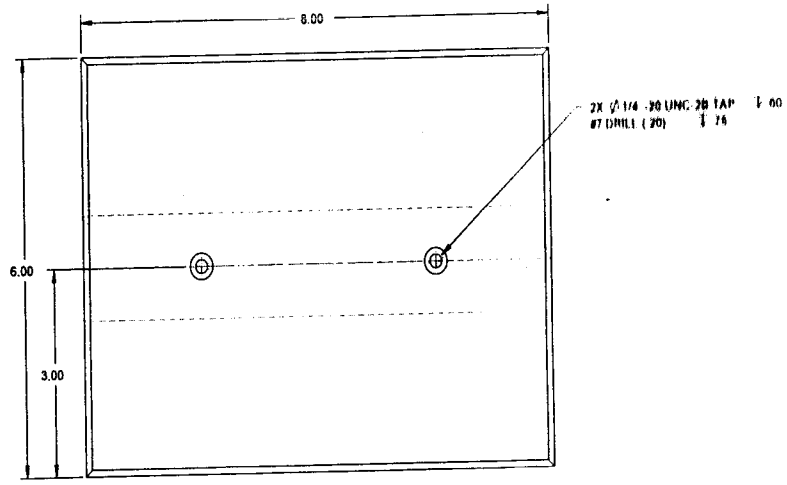

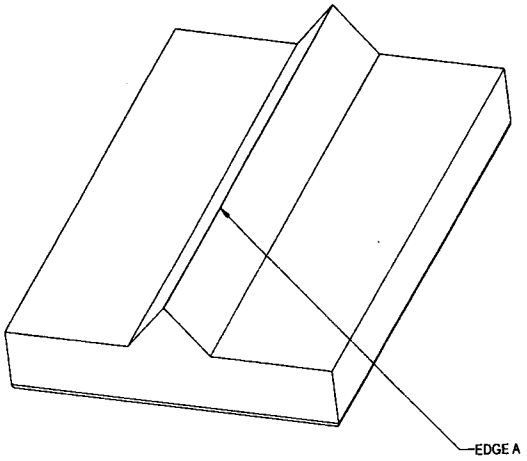

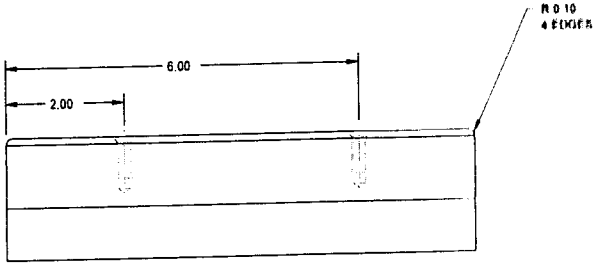

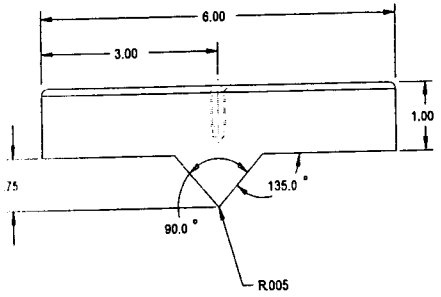

Ti 5 MT# A21A

ITEM	QTY	PART NUMBER	DESCRIPTION	MATERIAL/SPECIFICATION/NOTES
1	9		45 DEG DRIP SHIELD	TITANIUM, TI-5, FLAT BAR 6"x8"x13/4"

BILL OF MATERIAL/PARTS LIST

DEFAULT TOLERANCES	APPROVAL SIGNATURES
ONE PLACE (X.X) = ± 0.1	K. HRICISAK
TWO PLACES (X.XX) = ± 0.01	D. POMERENING
THREE PLACES (X.XXX) = ± 0.001	K. HRICISAK
FOUR PLACES (X.XXXX) = ± 0.0001	
ANGLES = ± 0.5 DEGREE	07-Mar-07
SURFACE FINISHES <= 125 MICROINCH RA	DRIP_SHIELD_45

THIRD ANGLE PROJECTION

SOUTHWEST RESEARCH INSTITUTE®
MECHANICAL AND MATERIALS ENGINEERING DIVISION
6220 CULEBRA ROAD SAN ANTONIO, TX 78238

DRIP_SHIELD_45

SIZE	CODE	DRAWING NUMBER	REV
D	26401		A

SCALE 1.000 | WEIGHT - 8.752 LBS | SHEET 1 OF 1

*BREAK AND SMOOTH ALL EDGES EXCEPT EDGE A

REV	SHT	REVISIONS DESCRIPTION	DATE
A		INITIAL RELEASE	

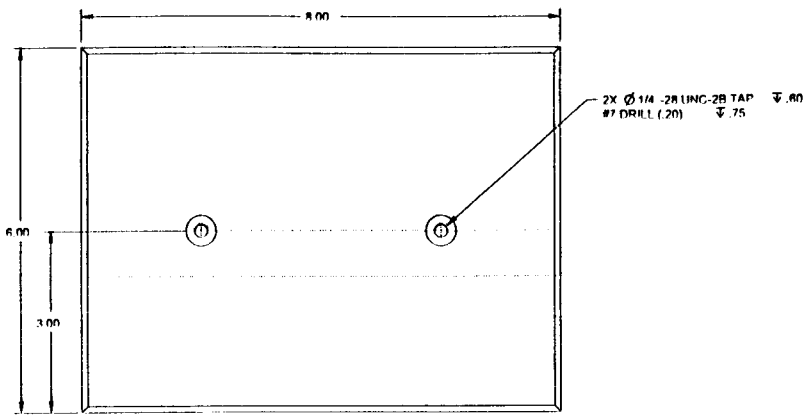

SWRI QA 5-21-07

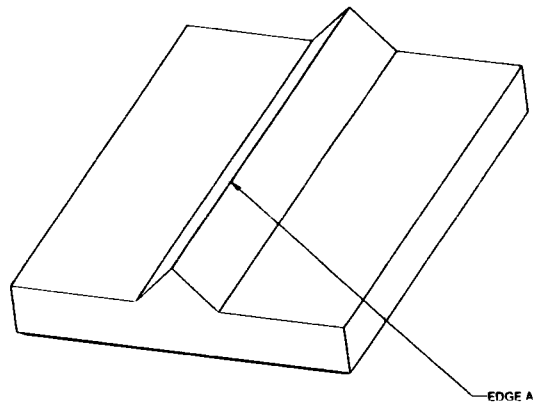

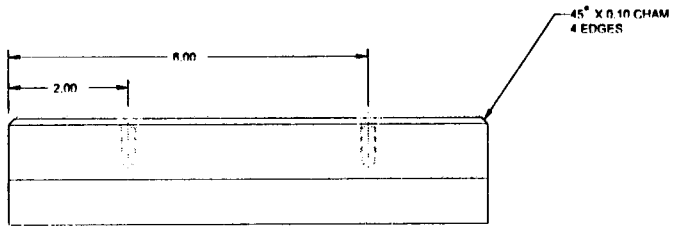

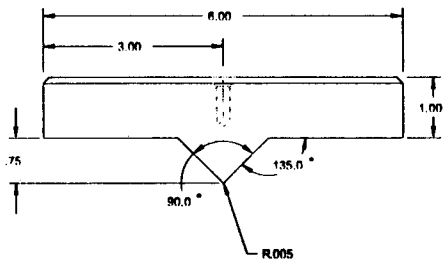

*BREAK AND SMOOTH ALL EDGES EXCEPT EDGE A

CNWRA DWG NO. 06002.01.342.004

Initiated by K. Chiang K. T. Chiang 5/22/07

Reviewed by L. Ibarra 5/22/07

QA Approval: R. Brient 5/22/07

ITEM	QTY	PART NUMBER	DESCRIPTION	MATERIAL/SPECIFICATION/NOTES
1	9		45 DEG DRIP SHIELD	TITANIUM, TI-5, FLAT BAR 8"x8"x13/4"

BILL OF MATERIAL/PARTS LIST

DEFAULT TOLERANCES	APPROVAL SIGNATURES
ONE PLACE (X.X) = ± 0.1	K. HINCHAK
TWO PLACES (X.XX) = ± 0.01	D. POWERINING
THREE PLACES (X.XXX) = ± 0.001	K. HINCHAK
FOUR PLACES (X.XXXX) = ± 0.0001	
ANGLES = ± 0.5 DEGREE	07-Mar-07
SURFACE FINISHES = 125 MICROINCH RA	DRIP_SHIELD_45

THIRD ANGLE PROJECTION

SOUTHWEST RESEARCH INSTITUTE®
MECHANICAL AND MATERIALS ENGINEERING DIVISION
6220 CULEBRA ROAD SAN ANTONIO, TX 78238

DRIP_SHIELD_45

D	26401	CNWRA 06002.01.342.004	A

SCALE 1.000 WEIGHT - 8.752 LBS SHEET 1 OF 1

345

5-21-07

	#1	#2
4-28 uc-2B J.60	.750	.750
overall 8 x 6	8.003 x 6.002	8.003 / 6.000
Hole 2 x 6	2.001 x 6.001	2.004 / 6.002
45° EDGE	✓	✓
1.00	1.003	1.004
.75	.754	.753
90°	89.58°	89.53°
135°	134.87°	134.88°
3.00	3.004	3.001

#3 .750	#4 .754	#5 .750
7.999 / 6.000	7998 / 5.997	8.000 / 6.002
2.005 / 6.005	2.003 / 6.004	2.003 / 6.003
45° ✓	✓	✓
1.004	1.006	1.004
.754	.750	.754
89.56°	89.58	89.58
134.87°	134.87	134.89
3.005	3.004	3.004

#6 .735	#7 .755	#8 .755	#9 .755
8.002 / 6.002	7.999 / 6.000	8.002 / 6.002	7.998 / 6.001
2.004 / 6.004	2.002 / 6.003	2.003 / 6.005	2.002 / 6.003
45° ✓	✓	45° ✓	45° ✓
1.002	1.006	1.000	1.0005
.750	.755	.749	.749
89.57	89.58	89.58	89.58
134.88	134.90	134.88	134.88
3.006	3.005	3.003	3.003

ASSET # 002157
" # 006149
" # 006793

Specimen Machining Documentation Form

Purchase/Work Order Number			
Material Identification		Ti 5 HT A21A	
Material Heat Number		A21A	
CNWRA Requestor		Ken Chiang	
Vendor		Suzi Machine Shop	
Specimen Description (CNWRA Drawing Number, ASTM Standard)		Div 18 Drawing K. Hricisak	
To be Completed Prior to Order		**To be Completed upon Receipt of Order**	
Date	5/21/07	**Date**	6/14/07
Material Supplied to Vendor (Y/N)	Y	**Remaining Stock Material Returned From Vendor (Y/N)**	None left
Material Marked with Heat Number and Rolling Direction (Y/N)	Y	**Remaining Stock Material Marked with Heat Number and Rolling Direction (Y/N)**	None left
Dimensions of Material stock provided (L x W x H)	1.75" x 6" x 8" sent 3 Blocks	**Remaining Stock Material Dimensions (L x W x H)**	only Specimens
Specimen Quantity Ordered	3	**Specimen Quantity Received**	3
Dimensional Inspection Required (Y/N)	Y	**Dimensional Inspection Provided (Y/N)**	Y
Marked Containment Provided (Y/N)	Box And material Markers	**Marked Containment Used (Y/N)**	Box
Documented in Scientific Notebook Number/Page Number			
NCR Number (if applicable)			

Signature 5/21/07 Date

248

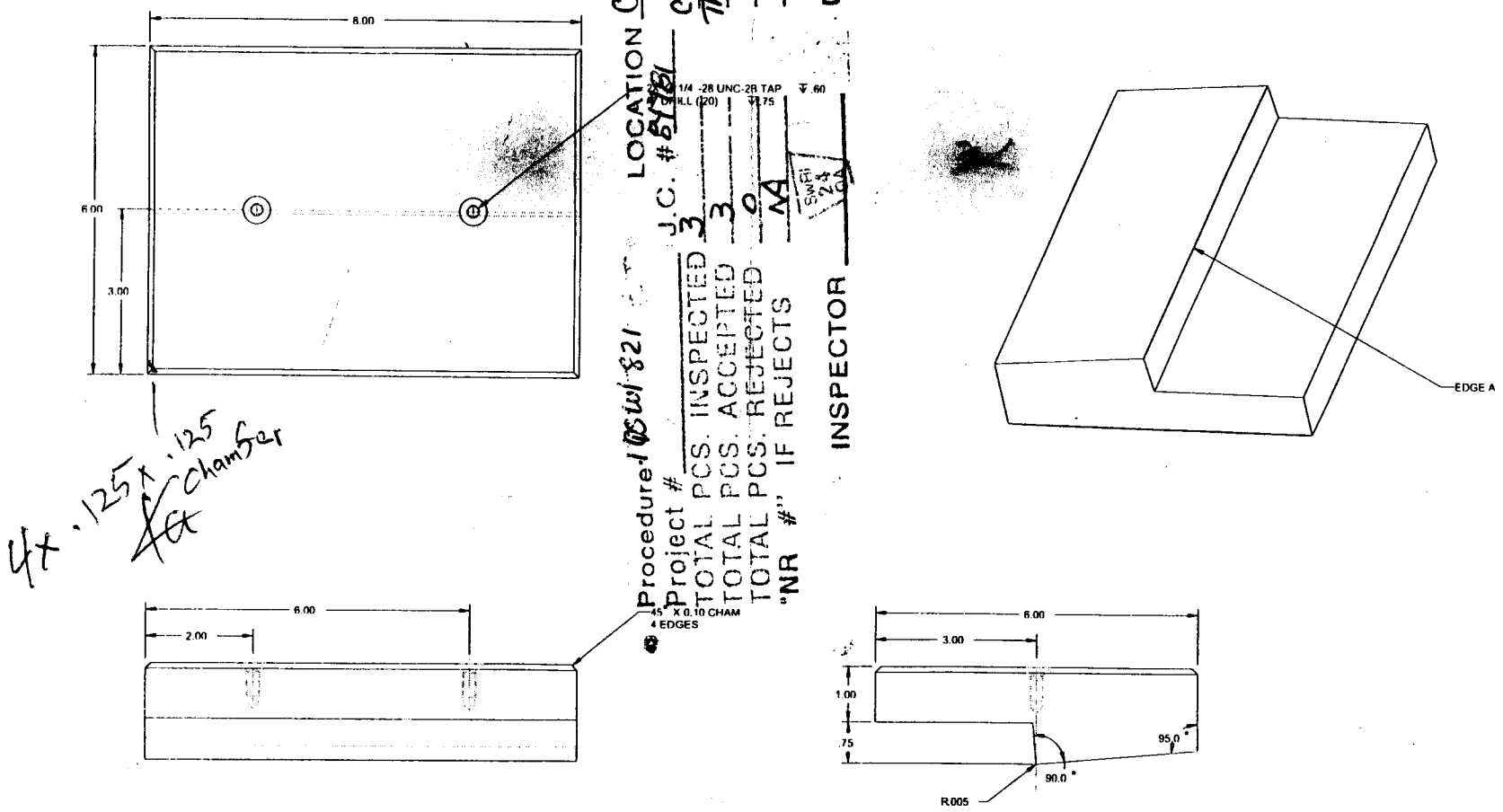

LOCATION CC31MS
EQUIPMENT CMM 012084 Thd Gage 002187
DATE 6/12/07
Procedure 10SW1821
Project # 3
TOTAL PCS. INSPECTED 3
TOTAL PCS. ACCEPTED 3
TOTAL PCS. REJECTED 0
"NR #" IF REJECTS NA
INSPECTOR SWRI 24 QA

REV	SHT	REVISIONS DESCRIPTION	DATE
A		INITIAL RELEASE	

*BREAK AND SMOOTH ALL EDGES EXCEPT EDGE A

CNWRA DWG NO. 06002.01.342.002
Initiated by K. Chiang K.T. Chiang 5/22/07
Reviewed by L. Ibarra 5/22/07
QA Approval: R. Brient 5/22/07

ITEM	QTY	PART NUMBER	DESCRIPTION	MATERIAL/SPECIFICATION/NOTES
1	4		5 DEG DRIP SHIELD	TITANIUM, TI-5, FLAT BAR 6"x8"x13/4"

BILL OF MATERIAL/PARTS LIST

DEFAULT TOLERANCES	APPROVAL SIGNATURES
ONE PLACE (X.X) = ± 0.1	K. HRICISAK
TWO PLACES (X.XX) = ± 0.01	D. POMERENING
THREE PLACES (X.XXX) = ± 0.001	K. HRICISAK
FOUR PLACES (X.XXXX) = ± 0.0001	
ANGLES = ± 0.5 DEGREE	07-Mar-07
SURFACE FINISHES <= 125 MICROINCH RA	DRIP_SHIELD_05
THIRD ANGLE PROJECTION	

SOUTHWEST RESEARCH INSTITUTE®
MECHANICAL AND MATERIALS ENGINEERING DIVISION
6220 CULEBRA ROAD SAN ANTONIO, TX 78238

DRIP_SHIELD_05

SIZE	CODE	DRAWING NUMBER	REV
D	26401	CNWRA 06002.01.342.002	A
SCALE 1.000		WEIGHT - 10.514 LBS	SHEET 1 OF 1

3 piece

Material: Alloy 825

Sample ID/Heat#:
HH 7004 FK

Page numbers: 249 - 250

CENTER FOR NUCLEAR WASTE REGULATORY ANALYSES

SAMPLE CUSTODY/CONTROL LOG ENTRY FORM

SAMPLE IDENTIFICATION (Mandatory) Alloy 825, HH7004FK

SAMPLE DESIGNATION: Alloy 825, HH7004FK

DESCRIPTION OF SAMPLE (Mandatory)

Incoloy Alloy 825, HH7004FK U-bend specimens

REFERENCE TOP OR SCIENTIFIC NOTEBOOK ENTRY

Notebook 009

AMOUNT OF SAMPLE / SIZE
0.125" thick U-bend specimens

DATE OF SAMPLE RECEIPT (Mandatory) January 1993

DATE OF INITIAL LOG ENTRY (Mandatory) 4/27/1994 **BY** Narasi Sridhar

SAMPLE STORAGE LOCATION (Mandatory) Building 57

COLLECTION SITE (Reference Maps or Field Notes As Required)

PERSON(S) WHO COLLECTED SAMPLE(S)

Narasi Sridhar

SUPPLIER Metal Samples

OTHER

CNWRA FORM TOP-004

Material: 316L SS

Sample ID/Heat#: 853252

Page numbers: 251 - 252

CENTER FOR NUCLEAR WASTE REGULATORY ANALYSES

SAMPLE CUSTODY/CONTROL LOG ENTRY FORM

SAMPLE IDENTIFICATION (Mandatory) Type 316L SS 853252

SAMPLE DESIGNATION: Type 316L SS 853252

DESCRIPTION OF SAMPLE (Mandatory)

Type 316L SS Heat 853252

REFERENCE TOP OR SCIENTIFIC NOTEBOOK ENTRY

Notebook 009

AMOUNT OF SAMPLE / SIZE
0.125" thick U-bend specimens

DATE OF SAMPLE RECEIPT (Mandatory) January 1993

DATE OF INITIAL LOG ENTRY (Mandatory) 4/27/1994 **BY** Narasi Sridhar

SAMPLE STORAGE LOCATION (Mandatory) Building 57

COLLECTION SITE (Reference Maps or Field Notes As Required)

PERSON(S) WHO COLLECTED SAMPLE(S)

Narasi Sridhar

SUPPLIER Reynolds/Metal Samples

OTHER

CNWRA FORM TOP-004

Material: A516 Grade 60

Sample ID/Heat#:
D84944

Page numbers: 253 - 266

CENTER FOR NUCLEAR WASTE REGULATORY ANALYSES

SAMPLE CUSTODY/CONTROL LOG ENTRY FORM

SAMPLE IDENTIFICATION (Mandatory) A516 Grade 60 Heat D84944

SAMPLE DESIGNATION: A516 Grade 60 Heat D84944

DESCRIPTION OF SAMPLE (Mandatory)

A516 Grade 60 Heat D84944

REFERENCE TOP OR SCIENTIFIC NOTEBOOK ENTRY

Notebook 009

AMOUNT OF SAMPLE / SIZE
1 piece 96" x 48" x ½"

DATE OF SAMPLE RECEIPT (Mandatory) February 2, 1995

DATE OF INITIAL LOG ENTRY (Mandatory) June 12, 1997 **BY** Darrell Dunn

SAMPLE STORAGE LOCATION (Mandatory) Building 57

COLLECTION SITE (Reference Maps or Field Notes As Required)

PERSON(S) WHO COLLECTED SAMPLE(S)

Darrell Dunn

SUPPLIER Gary Works / American Alloy Steel

OTHER

CNWRA FORM TOP-004

Specimen Machining Documentation Form

Purchase/Work Order Number			
Material Identification		516 L	
Material Heat Number		D84944	
CNWRA Requestor		Darrell Dunn	
Vendor		SWRI Machine Shop	
Specimen Description (CNWRA Drawing Number, ASTM Standard)		20.06002.01.322.017	
To be Completed Prior to Order		**To be Completed upon Receipt of Order**	
Date	2-16-06	**Date**	2/27/06
Material Supplied to Vendor (Y/N)	Y	**Remaining Stock Material Returned From Vendor (Y/N)**	Y
Material Marked with Heat Number and Rolling Direction (Y/N)	Y	**Remaining Stock Material Marked with Heat Number and Rolling Direction (Y/N)**	Y But Not Enough Material left Over
Dimensions of Material stock provided (L x W x H)	5" 5.5"	**Remaining Stock Material Dimensions (L x W x H)**	Will Discard Remaining Strips of Material
Specimen Quantity Ordered	1	**Specimen Quantity Received**	1
Dimensional Inspection Required (Y/N)	Y	**Dimensional Inspection Provided (Y/N)**	Y
Marked Containment Provided (Y/N)	Y	**Marked Containment Used (Y/N)**	Y
Documented in Scientific Notebook Number/Page Number			
NCR Number (if applicable)			

Signature 2/16/06 Date

256

Darrell S. Dunn
Division 18 Bldg 128
Phone: 6090
Fax: 6965

Drawing 20.06002.01.322.017
Sputter Target
Page 1 of 1
Dimensional tolerance +/- 0.010" unless otherwise specified
Material: Specified at time of order

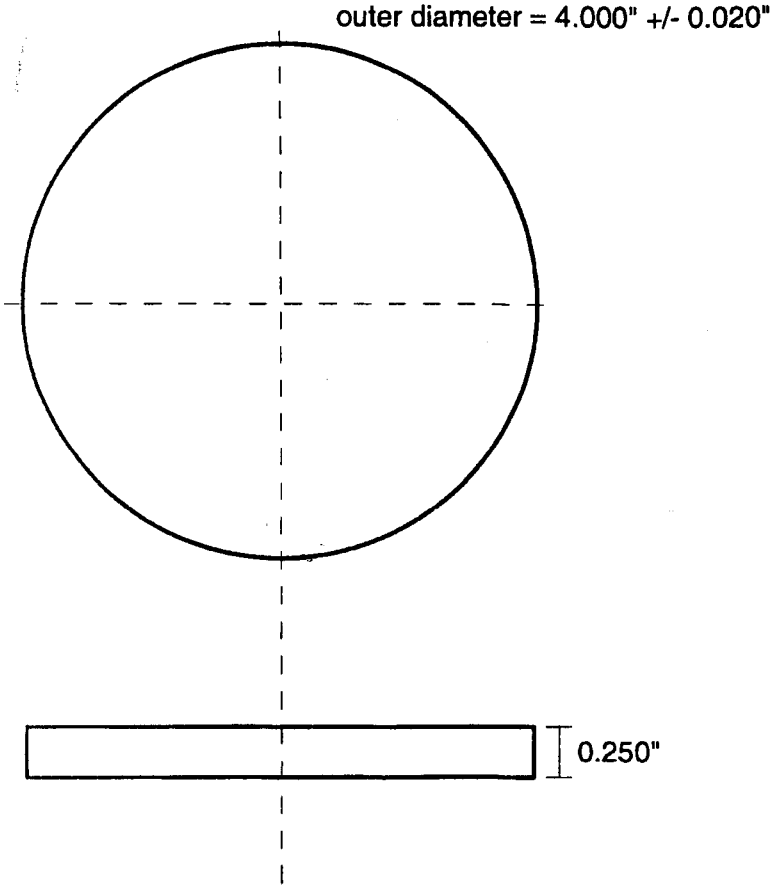

Procedure 105-W1-821
Project #
TOTAL PCS. INSPECTED 5
TOTAL PCS. ACCEPTED 5
TOTAL PCS. REJECTED 0
"NR #" IF REJECTS NA
INSPECTOR
LOCATION SC31 MS
J.C. # 82641
EQUIPMENT
Mic 009976 Due 1-13-07
Calipers 005081 Due 12-14-06
DATE 2-27-06

304L HT# T0954
C22 HT# 2277-3-3266
825 HT# HH4371 FC
316L HT# P80746
516L HT# 084944

Darrell S. Dunn 2/6/06
Darrell S. Dunn date

2/7/06
Vijay Jain date

2/7/06
Bob Brient date

Darrell S. Dunn
Division 18 Bldg 128
Phone: 6090
Fax: 6965

Drawing 20.06002.01.322.017
Sputter Target
Page 1 of 1
Dimensional tolerance +/- 0.010" unless otherwise specified
Material: Specified at time of order

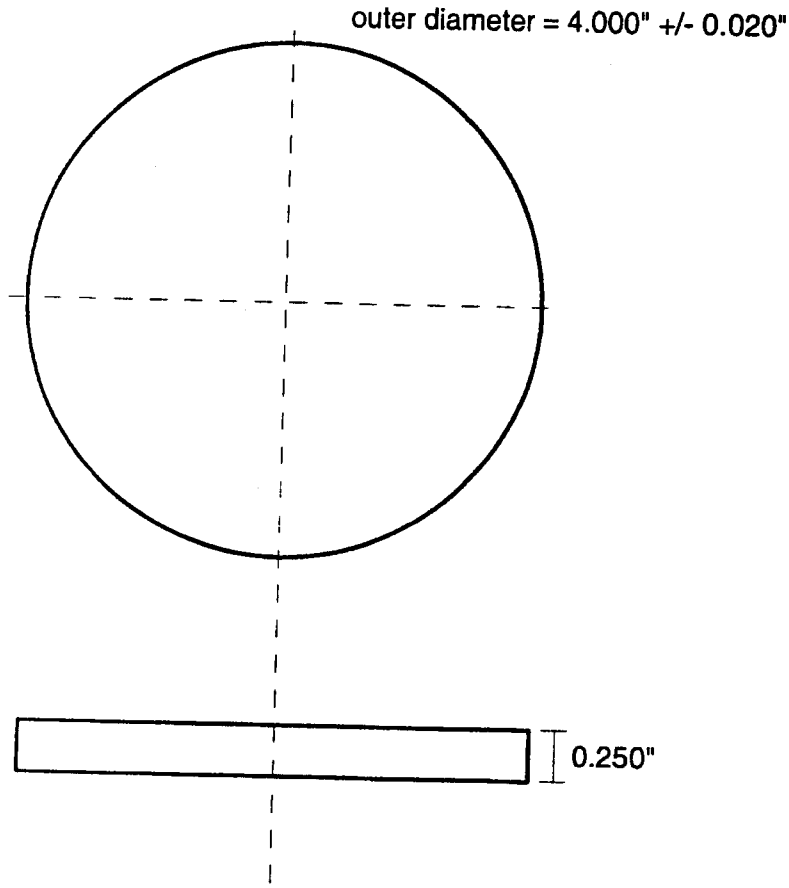

Darrell S. Dunn 2/6/06
Darrell S. Dunn date

2/7/06
Vijay Jain date

2/7/06
Bob Brient date

Specimen Machining Documentation Form

Purchase/Work Order Number			
Material Identification		A516	
Material Heat Number		D84944	
CNWRA Requestor		Darrell Dunn	
Vendor		SwRI Machine Shop	
Specimen Description (CNWRA Drawing Number, ASTM Standard)		20.06002.01.322.020	
To be Completed Prior to Order		**To be Completed upon Receipt of Order**	
Date	6/7/06	**Date**	
Material Supplied to Vendor (Y/N)	Y	**Remaining Stock Material Returned From Vendor (Y/N)**	Y
Material Marked with Heat Number and Rolling Direction (Y/N)	Y	**Remaining Stock Material Marked with Heat Number and Rolling Direction (Y/N)**	Y
Dimensions of Material stock provided (L x W x H)	X2 1.5" 2"	**Remaining Stock Material Dimensions (L x W x H)**	No Extra material
Specimen Quantity Ordered	8	**Specimen Quantity Received**	8
Dimensional Inspection Required (Y/N)	Y	**Dimensional Inspection Provided (Y/N)**	Y
Marked Containment Provided (Y/N)	Y	**Marked Containment Used (Y/N)**	Y
Documented in Scientific Notebook Number/Page Number			
NCR Number (if applicable)			

Signature 6/7/06 Date

Darrell S. Dunn
Division 18 Bldg 128
Phone: 6090
Fax: 6965

Flat Metal Sensor Element
Drawing 20.06002.01.322.020
Page 1 of 2
Dimensional tolerance +/- 0.010" unless otherwise specified
Material: Specified at time of order

Specimen Thickness +/- Tolerance: 0.062" +/- 0.003"

MATERIAL	QUANTITY
304L SS	8
A516 STEEL	8

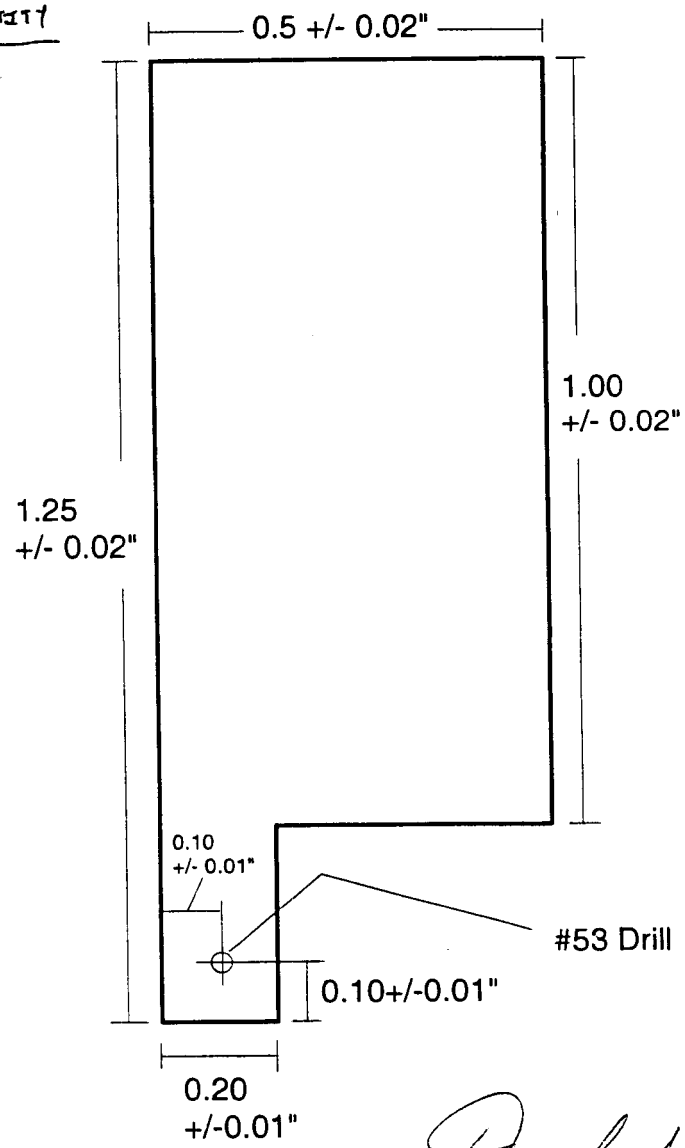

Darrell S. Dunn — 5/30/06 date

Vijay Jain — 5/31/06 date

Bob Brient — 5/31/06 date

Darrell S. Dunn
Division 18 Bldg 128
Phone: 6090
Fax: 6965

Flat Metal Sensor Element
Drawing 20.06002.01.322.020
Page 2 of 2
Dimensional tolerance +/- 0.010" unless otherwise specified
Material: Specified at time of order

Specimen Thickness +/- Tolerance: 0.062" +/- 0.003"

MATERIAL	QUANTITY
Alloy 22	16

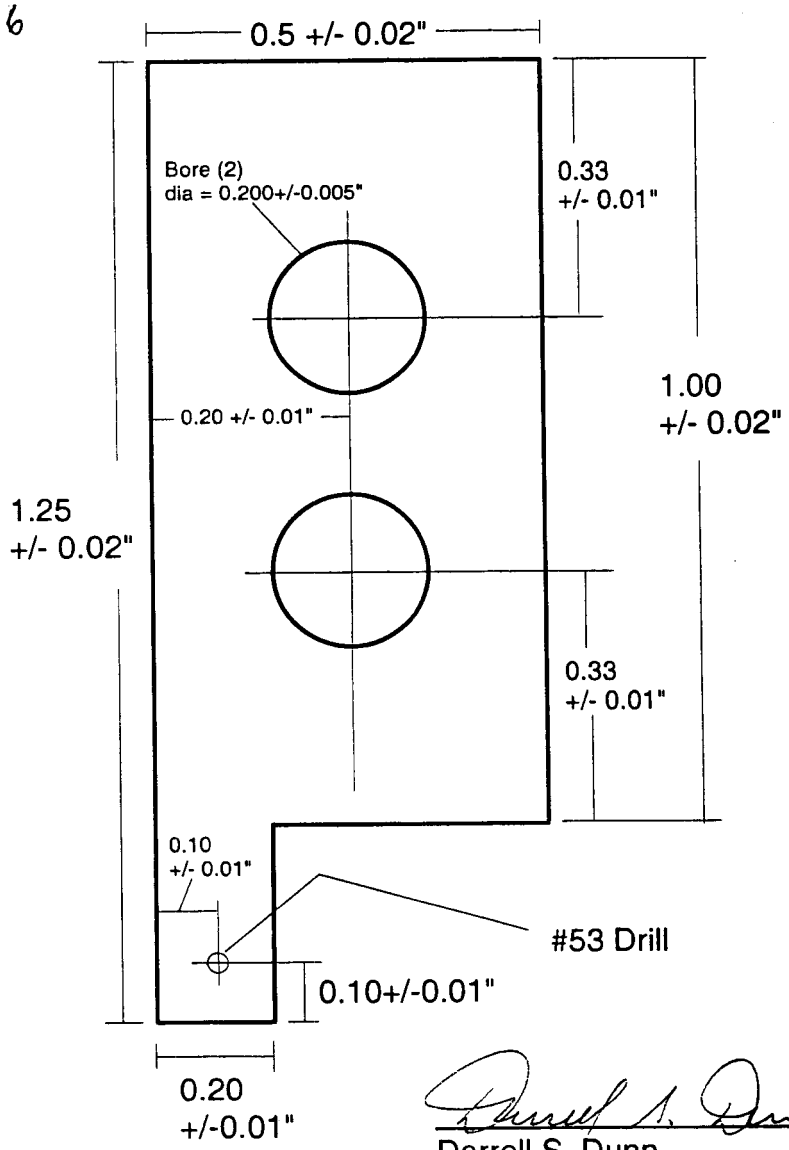

Darrell S. Dunn — 5/30/06 date

Vijay Jain — 5/31/06 date

Bob Brient — 5/31/06 date

Darrell S. Dunn Division 18 Bldg 128 Phone: 6090 Fax: 6965	Flat Metal Sensor Element Drawing 20.06002.01.322.020 Page 2 of 2 Dimensional tolerance +/- 0.010" inless otherwise specified Material: Specified at time of order

Specimen Thickness +/- Tolerance: 0.062" +/- 0.003"

MATERIAL	QUANTITY
Alloy 22	16

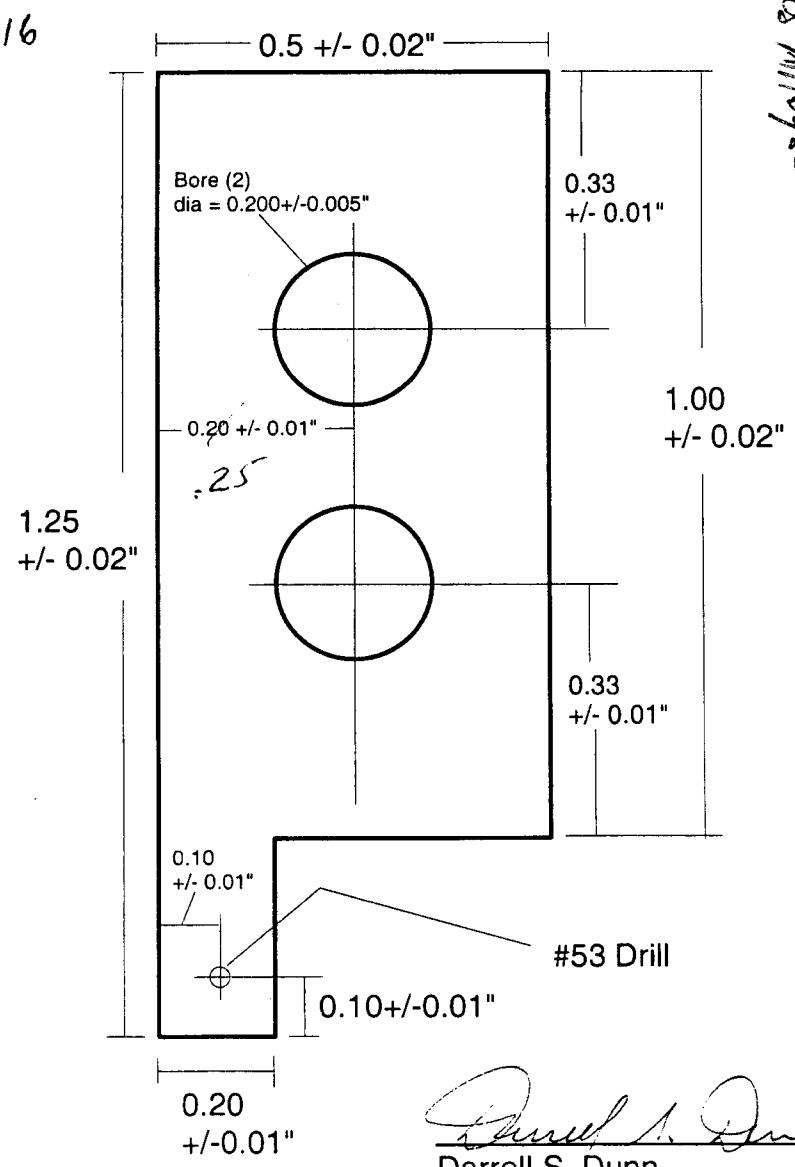

Procedure:
Project #
TOTAL PCS. INSPECTED 28 16 LXS
TOTAL PCS. ACCEPTED 30 16 LXS
TOTAL PCS. REJECTED 0
"NR #" IF REJECTS NA
INSPECTOR SWRI 24 QA
16 pcs Alloy 22
LOCATION J.C. # 83182
EQUIPMENT Cal. 00 5081 Blue 12-14-06
DATE 6/26/06

Darrell S. Dunn 5/30/06
Darrell S. Dunn date

Vijay Jain 5/31/06
Vijay Jain date

Bob Brient 5/31/06
Bob Brient date

Darrell S. Dunn
Division 18 Bldg 128
Phone: 6090
Fax: 6965

Flat Metal Sensor Element
Drawing 20.06002.01.322.020
Page 1 of 2
Dimensional tolerance +/- 0.010" unless otherwise specified
Material: Specified at time of order

Specimen Thickness +/- Tolerance: 0.062" +/- 0.003"

MATERIAL	QUANTITY
304L SS	8
A516 STEEL	8

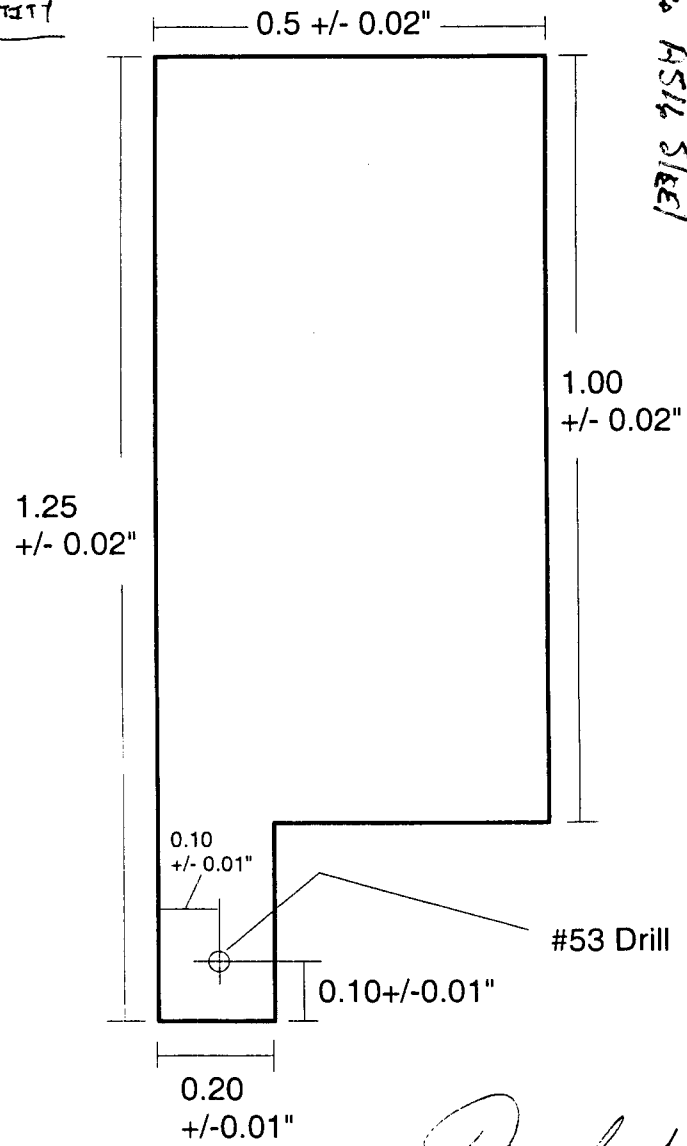

Procedure:
Project #
TOTAL PCS. INSPECTED 16
TOTAL PCS. ACCEPTED 0
TOTAL PCS. REJECTED
"NR #" IF REJECTS NA
INSPECTOR
8 pcs. 304L SS
8 pcs A516 Steel
J.C. # 83182
LOCATION
EQUIPMENT
Cal 005681 Due 12-14-06
DATE 6/26/06

Darrell S. Dunn 5/30/06
Darrell S. Dunn date

Vijay Jain 5/31/06
Vijay Jain date

Bob Brient 5/31/06
Bob Brient date

Specimen Machining Documentation Form

Purchase/Work Order Number			
Material Identification		516L	
Material Heat Number		D84944	
CNWRA Requestor		Todd Mintz	
Vendor		SwRI Machine Shop	
Specimen Description (CNWRA Drawing Number, ASTM Standard)		20-01402-571-019	
To be Completed Prior to Order		**To be Completed upon Receipt of Order**	
Date	11/1/07	**Date**	11/9/07
Material Supplied to Vendor (Y/N)	Y	**Remaining Stock Material Returned From Vendor (Y/N)**	Y
Material Marked with Heat Number and Rolling Direction (Y/N)	Y	**Remaining Stock Material Marked with Heat Number and Rolling Direction (Y/N)**	Y
Dimensions of Material stock provided (L x W x H)	4" 2"	**Remaining Stock Material Dimensions (L x W x H)**	
Specimen Quantity Ordered	12	**Specimen Quantity Received**	12
Dimensional Inspection Required (Y/N)	Y	**Dimensional Inspection Provided (Y/N)**	Y
Marked Containment Provided (Y/N)	Y	**Marked Containment Used (Y/N)**	Y
Documented in Scientific Notebook Number/Page Number			
NCR Number (if applicable)			

Signature 11/1/07 Date

Specimen Machining Documentation Form

Purchase/Work Order Number			
Material Identification		316L	
Material Heat Number		HT # D84944	
CNWRA Requestor		Todd Mintz	
Vendor		swei Machine shop	
Specimen Description (CNWRA Drawing Number, ASTM Standard)		20.06002.01.322.020	
To be Completed Prior to Order		**To be Completed upon Receipt of Order**	
Date	12/17/07	**Date**	1.11.08
Material Supplied to Vendor (Y/N)	Y	**Remaining Stock Material Returned From Vendor (Y/N)**	Y
Material Marked with Heat Number and Rolling Direction (Y/N)	Y	**Remaining Stock Material Marked with Heat Number and Rolling Direction (Y/N)**	Y
Dimensions of Material stock provided (L x W x H)	12" 24"	**Remaining Stock Material Dimensions (L x W x H)**	12" 24"
Specimen Quantity Ordered	~~8~~ 12	**Specimen Quantity Received**	12
Dimensional Inspection Required (Y/N)	Y	**Dimensional Inspection Provided (Y/N)**	Y
Marked Containment Provided (Y/N)	Y	**Marked Containment Used (Y/N)**	Y
Documented in Scientific Notebook Number/Page Number			
NCR Number (if applicable)			

Signature Date

Darrell S. Dunn
Division 18 Bldg 128
Phone: 6090
Fax: 6965

Flat Metal Sensor Element
Drawing 20.06002.01.322.020
Page 1 of 2
Dimensional tolerance +/- 0.010" unless otherwise specified
Material: Specified at time of order

Specimen Thickness +/- Tolerance: 0 [redacted] .125" +/- 0.003"

MATERIAL	QUANTITY
304L SS	8 - 12
A516 STEEL	8 - 12

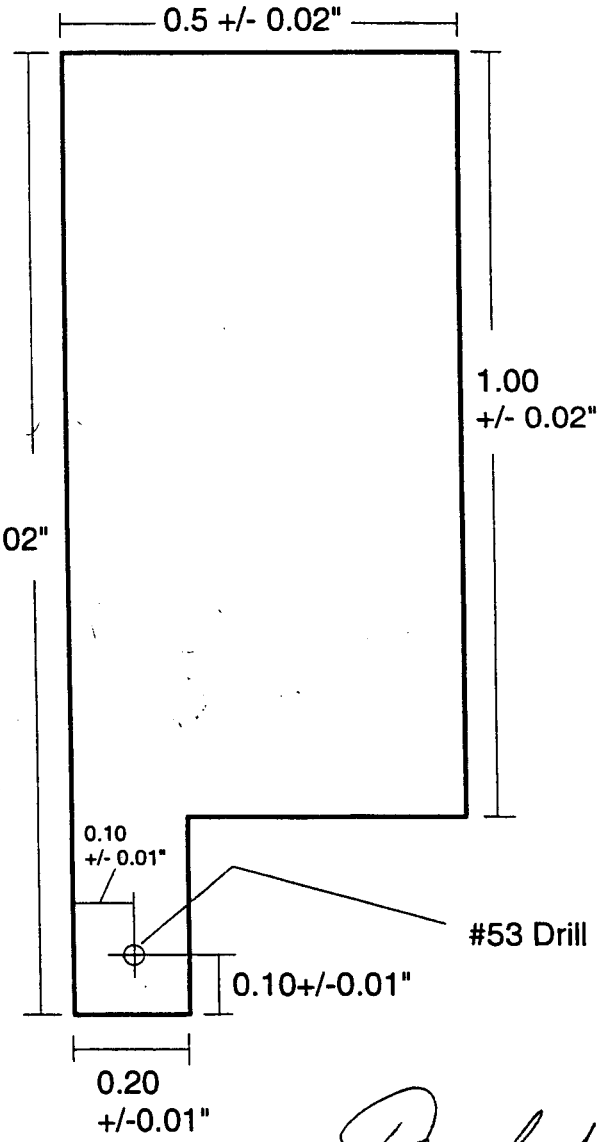

304L SS

A516 STEEL

Procedure: TOS-WT-821
Project #
TOTAL PCS. INSPECTED 12
TOTAL PCS. ACCEPTED 12
TOTAL PCS. REJECTED 0
"NR #" IF REJECTS NA
INSPECTOR
LOCATION M.S
J.C. # 85728
EQUIPMENT Cal 008051
DATE 1-14-08

Procedure: TOS-WT-821
Project #
TOTAL PCS. INSPECTED 12
TOTAL PCS. ACCEPTED 12
TOTAL PCS. REJECTED 0
"NR #" IF REJECTS NA
INSPECTOR
LOCATION CCSI
J.C. # 85728
EQUIPMENT Cal 008051
DATE 1-14-08

Darrell S. Dunn 5/30/06
Darrell S. Dunn date

Vijay Jain 5/31/06
Vijay Jain date

Bob Brient 5/31/06
Bob Brient date

266

Darrell S. Dunn
SwRI-CNWRA
Phone: (210) 522-6090
Fax: (210) 522-5184

Cylindrical Test Specimen

CNWRA Drawing 20.01402.571.019

#5-40 thread centered minimum 0.250" deep

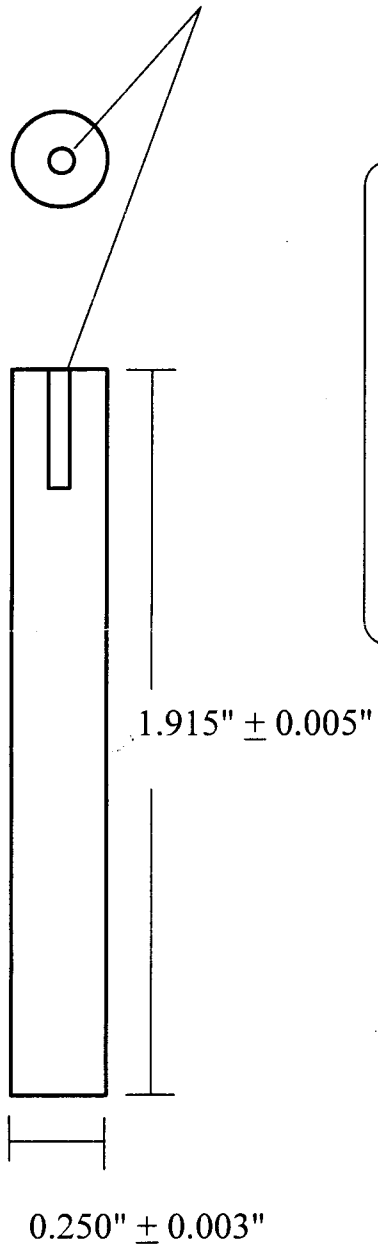

This information is to be completed at time of fabrication

Material: 516-60

Heat #: D84344

Specimen Orientation: Parallel To Roll

Other:

Initiated by. D. Dunn — Date 10/15/01

QA Approval B. Mabrito — Date 10/15/01

Reviewed by V. Jain — Date 10/15/01

11/13/07
12 pcs OK

Material: Carbon Steel 1008

Sample ID/Heat#:
Wire Heat Process 24246C

Page numbers: 267 - 271

CENTER FOR NUCLEAR WASTE REGULATORY ANALYSES

SAMPLE CUSTODY/CONTROL LOG ENTRY FORM

SAMPLE IDENTIFICATION (Mandatory) Carbon steel Grade 1008 Heat process No. 24246C

SAMPLE DESIGNATION CS1008 Heat process no. 24246C

DESCRIPTION OF SAMPLE (Mandatory)

Carbon steel coil Grade 1008, 0.0475" Dia wire, annealed
Heat process No. 24246C

REFERENCE TOP OR SCIENTIFIC NOTEBOOK ENTRY

Notebook 771, Page 5

AMOUNT OF SAMPLE 2 ½ coils SIZE 168 lbs

DATE OF SAMPLE RECEIPT (Mandatory) 7/19/2002

DATE OF INITIAL LOG ENTRY (Mandatory) 2/6/2006 BY Xihua He

SAMPLE STORAGE LOCATION (Mandatory) Building 57

COLLECTION SITE (Reference Maps or Field Notes As Required)

PERSON(S) WHO COLLECTED SAMPLE(S)

Xihua He

SUPPLIER Central Steel & Wire Company

OTHER

CNWRA FORM TOP-004

ACCREDITED
Certificate # 286.01
Certificate # 286.02

staveleyservices MATERIALS TESTING

192 Internationale Blvd.
Glendale Heights, IL 60139
Telephone 630-681-0008
Facsimile 630-871-5520
www.staveleymt.com

269

TEST REPORT

SOUTHWEST RESEARCH INST. 7010
6220 CULEBRA RD
P.O. DRAWER 28510
SAN ANTONIO TX 78284
XIHUA (SHEWA) HE, PH.D.

P.O.# 686333J

DESCR 01-24-06
ASTM A510-03

REPORT DATE: 01/27/2006

LAB NO: 0126-005 / 01 RECEIVED DATE: 01/26/2006 JOB NO:

1008 CARBON STEEL WIRE

CHEMICAL ANALYSIS

Si	.18	Mn	.45 ✓	C	.10 ✓
P	.005 ✓	S	.009 ✓	Ni	.07
Cr	.07	Mo	.01	Cu	.14
Al	<.01	Pb	.001	V	<.01
B	<.0005	Fe	REMAINDER	Cb	<.01

THE ABOVE CHEMICAL TEST RESULTS CONFORM TO ASTM A510-03 GRADE 1008

TEST METHODS: ASTM E-1024-97* ; ASTM E-1019-03* ; ICP* ;

Q.A. INSPECTOR

ALL CHEMICAL TEST RESULTS ARE REPORTED IN WEIGHT PERCENT UNLESS OTHERWISE NOTED.

SAMPLE RESULTS RELATE ONLY TO THE SAMPLE TESTED

*THIS TEST RESULT IS NOT COVERED BY OUR CURRENT A2LA ACCREDITATION
THIS REPORT SHALL NOT BE REPRODUCED EXCEPT IN FULL WITHOUT THE WRITTEN APROVAL OF STAVELEY SERVICES MATERIALS TESTING.
KNOWINGLY OR WILLFULLY FALSIFYING OR CONCEALING MATERIAL FACT ON THIS FORM, OR MAKING FALSE, FICTITIOUS OR FRAUDULENT STATEMENTS OR REPRESENTATIONS HEREIN COULD CONSTITUTE A FELONY PUNISHABLE UNDER FEDERAL STATUTES.

270
~~181~~ 3

From Notebook #497 IR&D + ATP project

LCK

MATERIAL CERTIFICATION

PAGE 01 of 01

P.O. Box 12100 • Detroit, MI 48212-0100
1-313-368-5000 1-800-462-1950
(FAX 1-800-292-3878)
P.O. Box 1154 • Milwaukee, WI 53201-1154
1-414-481-5000 1-800-521-8031
(FAX 1-800-292-6459)

Central Steel & Wire Company

P.O. Box 5100 • Chicago, IL 60680-5100
1-773-471-3800 1-800-621-8510
(FAX 1-800-232-9279)

P.O. Box 14148 • Cincinnati, OH 45250-0148
1-800-541-7190
(FAX 1-800-292-2466)
P.O. Box 22015 • Greensboro, NC 27420-2015
1-336-333-2332 1-800-621-8510
(FAX 1-888-284-4578)

SOLD TO: SOUTHWEST RESEARCH INSTITUTE
P O BOX 28510
SAN ANTONIO TX 78238-0510

DATE: JUL 19, 2002
CSW ORDER: 755889
CUSTOMER PO: 286782-S

00000

ITEM 001 .0475" (18 GA) DIA BLACK ANNEALED WIRE CWC 168#

CHEMICAL COMPOSITION (%)

	C	MN	P	S
MIN	-	.30	-	-
MAX	.10	.50	.040	.050

ITEM 002 .0800" (14 GA) DIA BLACK ANNEALED WIRE CWC 127#

CHEMICAL COMPOSITION (%)

	C	MN	P	S
MIN	-	.30	-	-
MAX	.10	.50	.040	.050

According to our order it is CS1008. J. Yang 10/22/02

see below:

Confirmatory Analysis for Item 001 (0.0475" Dia Wire) was conducted. Results indicate that the material conforms with ASTM Standard for Carbon Steel 1008. See Scientific Notebook #771, Pages 4-5. Lietai Yang

WE CERTIFY THAT THE ABOVE MATERIALS FURNISHED BY US WILL CONFORM TO THE REQUIREMENTS AND SPECIFICATIONS OUTLINED.
Certifications furnished to the buyer by the seller describe the materials and/or services furnished, as indicated in the seller's records.
Results of mill tests implied in such certifications are based on standard mill practices and do not indicate each piece has been tested.

up dated 1/31/06

WE HEREBY CERTIFY THAT THE FOREGOING DATA IS A TRUE REPRESENTATION OF THE DATA FURNISHED TO US BY THE PRODUCING MILL

Richard Serra
METALLURGICAL REPRESENTATIVE

Central Steel & Wire Company

Form C-3161 R12/18/01

PURCHASE REQUISITION

SOUTHWEST RESEARCH INSTITUTE

PURCHASING

REQUISITION DATE	ORDER DATE	PURCHASE ORDER NUMBER	REQ. NO.
6/18/02			610173

SELECTED OR PREVIOUS SUPPLIER: Central Steel and Wire Company

DELIVER TO: L. Yang/bldg. 57

SHIP VIA

PURCHASING SELECTED SUPPLIER

DATE

Yang

21 i

Tag ~~on~~ attached to the coil

271

Form C-511-F R 10/20/97

From

Central Steel & Wire Company

CHICAGO • DETROIT • CINCINNATI • MILWAUKEE • GREENSBORO
3000 W. 51st STREET • CHICAGO, ILL 60632-2198

TO:

YELLOW 401 CGB 300 572954 3

Order No.

SOUTHWEST RESEARCH INSTITUTE

BOX 28510 6220 CULEBRA RD
SAN ANTONIO TX 78238

1 - PRODUCT IDENT. (P) IAC 39091

2 - SUPPLIER NO. (V)

3 - SERIAL NO. (S) S/O 755889 - 1 BDL 1

4 - CSTMR ORD. NO. (K) 286782 - S

5 - HEAT PROCESS NO. (1T) 24246C

9 - SIZE .0475" (18 GA) DIA BLACK ANNEALED WIRE CWC

6 - WEIGHT. (2Q) 168 LB

7 - LGTH/THEO. WT. (1Q)

10 - SPECIAL DATA. HEAT #

8 - PIECES (Q) 1 PC

YELLOW 401 CGB 300 572954 3

CUST00000 07/19/02

S/O 755889 - 1 BDL 1

07/19/02 12:41:07

Material: US DOE/Bechtel SAIC

Sample ID/Heat#:
D62X / 059902LL2

Page numbers: 272 - 275

CENTER FOR NUCLEAR WASTE REGULATORY ANALYSES TECHNICAL OPERATING PROCEDURE	Proc. TOP-012 Revision 1 Page 9 of 9

SAMPLE CUSTODY ENTRY FORM

SAMPLE IDENTIFICATION (Mandatory)
ALLOY 22 D62X NEAT # 059902LL2

SAMPLE DESIGNATOR D62X NEAT # 059902LL2

DESCRIPTION OF SAMPLE (Mandatory)
ALLOY 22 CORROSION PLATE
NARROW GROOVE TIG WELD DOUBLE - U

REFERENCE TOP or SCIENTIFIC NOTEBOOK ENTRY

AMOUNT of SAMPLE 1 PIECE SIZE 19"

DATE of SAMPLE RECEIPT (Mandatory) 1/23/2002

DATE of LOG ENTRY 1/23/2002 by DARRELL DUNN

SAMPLE STORAGE LOCATION (Mandatory)
BUILDING 57

Collection site:
DOE FURNISHED SPECIMEN

Supplier: US DOE / BECHTEL SAIC

Other: SPECIMEN WELDED AT FRAMATECH

CNWRA FORM TOP-004

Witnessed By [illegible] CNWRA QA
1/23/02

CENTER FOR NUCLEAR WASTE REGULATORY ANALYSES TECHNICAL OPERATING PROCEDURE	Proc. TOP-012 Revision 1 Page 9 of 9

SAMPLE CUSTODY ENTRY FORM

SAMPLE IDENTIFICATION (Mandatory)
ALLOY 22 PA3X HEAT # 059482LL2

SAMPLE DESIGNATOR PA3X HEAT # 059482LL2

DESCRIPTION OF SAMPLE (Mandatory)
ALLOY 22 STRAIN STUDY SAMPLE PLATE
WELDED USING PLASMA ARC WELDING

REFERENCE TOP or SCIENTIFIC NOTEBOOK ENTRY

AMOUNT of SAMPLE 1 PIECE SIZE 5 7/8"

DATE of SAMPLE RECEIPT (Mandatory) 1/23/2002

DATE of LOG ENTRY 1/23/2002 by DARRELL DUNN

SAMPLE STORAGE LOCATION (Mandatory)
BUILDING 57

Collection site:
DOE FURNISHED SPECIMEN

Supplier: US DOE / BECHTEL SAIC

Other: SPECIMEN WELDED AT FRAMATECH

CNWRA FORM TOP-004

Witnessed By [illegible] CNWRA QA 1/23/02

CENTER FOR NUCLEAR WASTE REGULATORY ANALYSES TECHNICAL OPERATING PROCEDURE	Proc. TOP-012 Revision 1 Page 9 of 9

SAMPLE CUSTODY ENTRY FORM

SAMPLE IDENTIFICATION (Mandatory)
ALLOY 22 OT4X HEAT # 059482LL2

SAMPLE DESIGNATOR OT4X 059482LL2

DESCRIPTION OF SAMPLE (Mandatory)
ALLOY 22 STRAIN STUDY SAMPLE PLATE
OPTIMIZED TIG WELDED

REFERENCE TOP or SCIENTIFIC NOTEBOOK ENTRY

AMOUNT of SAMPLE 1 PIECE SIZE 5 7/8"

DATE of SAMPLE RECEIPT (Mandatory) 1/23/2002

DATE of LOG ENTRY 1/23/2002 by DARRELL DUNN

SAMPLE STORAGE LOCATION (Mandatory)
BUILDING 57

Collection site:
DOE FURNISHED SPECIMEN

Supplier: USDOE / BECHTEL SAIC

Other: SPECIMEN WELDED AT FRAMATECH

CNWRA FORM TOP-004

Witnessed By (MR) CNWRA QA
1/23/02

Material: Met Spec Wires for Sensors

Sample ID/Heat#:
304L R254
304L FC7432
316L GW0219
C-22 22771 3150
Ti Alloy Grade 7 453072/R1652
Inconel 825 14174

Page numbers: 276 - 292

CENTER FOR NUCLEAR WASTE REGULATORY ANALYSES TECHNICAL OPERATING PROCEDURE	Proc. TOP-012 Revision 1 Page 9 of 9

SAMPLE CUSTODY ENTRY FORM

SAMPLE IDENTIFICATION (Mandatory) Stainless Steel 304L

SAMPLE DESIGNATOR 304L, HT R254

DESCRIPTION OF SAMPLE (Mandatory)

Stainless Steel 304L, HT R254

REFERENCE TOP or SCIENTIFIC NOTEBOOK ENTRY

Page 31-1, Book 423

AMOUNT of SAMPLE 10 Pieces SIZE 0.125"x1"x2"

DATE of SAMPLE RECEIPT (Mandatory) 11/29/00, originally for IRD work.

DATE of LOG ENTRY 9/08/03 by L-Yang

SAMPLE STORAGE LOCATION (Mandatory) Build. 57

Collection site:

Purchased from Metal Samples, P.O. # 1829305, Line 1

Supplier: Metal Samples

Other: Confirmatory Analysis by Staveley Services on 8/21/03, Page 110, Book 287

CNWRA FORM TOP-004

CENTER FOR NUCLEAR WASTE REGULATORY ANALYSES TECHNICAL OPERATING PROCEDURE	Proc. TOP-012 Revision 1 Page 9 of 9

SAMPLE CUSTODY ENTRY FORM

SAMPLE IDENTIFICATION (Mandatory)

Stainless Steel, Type 304L ~~Heat~~ Tracking Number # FC7432 J. Yang 1/27/06

SAMPLE DESIGNATOR

DESCRIPTION OF SAMPLE (Mandatory)

Stainless Steel, Type 304L, 1/2" x 2" x 0.06"

Tracking number J. Yang 1/27/06

~~Heat~~ # FC7432

REFERENCE TOP or SCIENTIFIC NOTEBOOK ENTRY

Note-book 604 page 281, Confirmatory Analysis see ~~NB 604~~, page 301. J. Yang 1/27/06.

AMOUNT of SAMPLE 24 SIZE 1/2" x 2" x 0.06"

DATE of SAMPLE RECEIPT (Mandatory) 6.15.04

DATE of LOG ENTRY 6.16.04 by R Dykstra

SAMPLE STORAGE LOCATION (Mandatory)

Bldg 57

Collection site:

Supplier: Metaspec

Other: Confirmatory Analysis see NB. 604, page 301 J. Yang 1/27/06

CNWRA FORM TOP-004

CENTER FOR NUCLEAR WASTE REGULATORY ANALYSES TECHNICAL OPERATING PROCEDURE	Proc. TOP-012 Revision 1 Page 9 of 9

SAMPLE CUSTODY ENTRY FORM

Tracking Number J. Yang 1/27/06

SAMPLE IDENTIFICATION (Mandatory)
Stainless Steel, Type 316L Heat # GW0219

SAMPLE DESIGNATOR

DESCRIPTION OF SAMPLE (Mandatory)
Stainless Steel, Type 316L 1/2" x 2" x 0.06"

REFERENCE TOP or SCIENTIFIC NOTEBOOK ENTRY
Notebook 604 page 282

AMOUNT of SAMPLE 24 SIZE 1/2" x 2" x 0.06"

DATE of SAMPLE RECEIPT (Mandatory) 6.15.04

DATE of LOG ENTRY 6.16.04 by R Dykstra

SAMPLE STORAGE LOCATION (Mandatory)
Bldg 90

Collection site:

Supplier: Metaspec

Other: Confirmatory Analysis see N.B. 604, pages 282-300.
J. Yang 1/27/06

CNWRA FORM TOP-004

CENTER FOR NUCLEAR WASTE REGULATORY ANALYSES TECHNICAL OPERATING PROCEDURE	Proc. TOP-012 Revision 1 Page 9 of 9

SAMPLE CUSTODY ENTRY FORM

22771 3150 J. Yang 1/27/06

SAMPLE IDENTIFICATION (Mandatory)
Inconel C-22 Heat # ~~CM0792~~

SAMPLE DESIGNATOR

DESCRIPTION OF SAMPLE (Mandatory)
Inconel, C-22, 1/2" x 2" x 0.06"

REFERENCE TOP or SCIENTIFIC NOTEBOOK ENTRY
Notebook 604 pg. 283

AMOUNT of SAMPLE 24 SIZE 1/2" x 2" x 0.06"

DATE of SAMPLE RECEIPT (Mandatory) 6.15.04

DATE of LOG ENTRY 6.16.04 by R Dykstra

SAMPLE STORAGE LOCATION (Mandatory)
Bldg 90

Collection site:

Supplier: Meta spec

Other: Confirmatory Analysis see Page 298 of NB 604
J. Yang 1/27/06

CNWRA FORM TOP-004

CENTER FOR NUCLEAR WASTE REGULATORY ANALYSES TECHNICAL OPERATING PROCEDURE	Proc. TOP-012 Revision 1 Page 9 of 9

SAMPLE CUSTODY ENTRY FORM

J. Yang 1/7/06

SAMPLE IDENTIFICATION (Mandatory)

Titanium Alloy, Grade 7 Heat # ~~SAI 1589~~ 453072

SAMPLE DESIGNATOR

DESCRIPTION OF SAMPLE (Mandatory)

Titanium Alloy, Grade 7 1/2" x 2" x .06

REFERENCE TOP or SCIENTIFIC NOTEBOOK ENTRY

Notebook 604 page 284

AMOUNT of SAMPLE 24 SIZE 1/2" x 2" x 0.06"

DATE of SAMPLE RECEIPT (Mandatory) 6.15.04

DATE of LOG ENTRY 6.16.04 by R Dykstra

SAMPLE STORAGE LOCATION (Mandatory)

Bldg 57

Collection site:

Supplier: Metaspec

Other: Confirmatory Analysis see page 303 of N.B. 604

CNWRA FORM TOP-004

J. Yang 1/7/06

CENTER FOR NUCLEAR WASTE REGULATORY ANALYSES TECHNICAL OPERATING PROCEDURE	Proc. TOP-012 Revision 1 Page 9 of 9

SAMPLE CUSTODY ENTRY FORM

L. Yarz 1/27/06

SAMPLE IDENTIFICATION (Mandatory) R-1652

Titanium Alloy, Grade 7 Heat # ~~SA 1 1584~~

SAMPLE DESIGNATOR

DESCRIPTION OF SAMPLE (Mandatory)

Titanium Alloy, Grade 7,
1/8" dia x 36" long wire

REFERENCE TOP or SCIENTIFIC NOTEBOOK ENTRY

Notebook 604 page 285

AMOUNT of SAMPLE 24 SIZE 1/8" dia x 36"

DATE of SAMPLE RECEIPT (Mandatory) 6.~~16~~ 15.04 RSD 6.16.04

DATE of LOG ENTRY 6.16.04 by R Dykstra

SAMPLE STORAGE LOCATION (Mandatory)

Bldg 57

Collection site:

Supplier: Metaspec

Other: Confirmatory Analysis see Page 302 of N.B. 604. L. Yarz. 1/27/06

CNWRA FORM TOP-004

CENTER FOR NUCLEAR WASTE REGULATORY ANALYSES TECHNICAL OPERATING PROCEDURE	Proc. TOP-012 Revision 1 Page 9 of 9

SAMPLE CUSTODY ENTRY FORM

SAMPLE IDENTIFICATION (Mandatory)
Inconel 825 Heat # ~~PS10096~~ 14174 J. Yang 1/27/06

SAMPLE DESIGNATOR

DESCRIPTION OF SAMPLE (Mandatory)
Inconel 825, Heat # PS10096
1/2" x 2" x .06"

REFERENCE TOP or SCIENTIFIC NOTEBOOK ENTRY
Notebook 604 page 286

AMOUNT of SAMPLE 24 SIZE 1/2" x 2" x .06"

DATE of SAMPLE RECEIPT (Mandatory) 6·15·04

DATE of LOG ENTRY 6·16·04 by R Dykstra

SAMPLE STORAGE LOCATION (Mandatory)
Bldg ~~98~~ RSO 57

Collection site:

Supplier: Meta Spec

Other: Confirmatory Analysis see page 299 of N.B. 604

CNWRA FORM TOP-004

ENTER FOR NUCLEAR WASTE REGULATORY ANALYSES TECHNICAL OPERATING PROCEDURE	Proc. TOP-012 Revision 2 Change 0 Page 6 of 6

CENTER FOR NUCLEAR WASTE REGULATORY ANALYSES

SAMPLE CUSTODY/CONTROL LOG ENTRY FORM

SAMPLE IDENTIFICATION (Mandatory) Platinum Wire

DESCRIPTION OF SAMPLE (Mandatory) Platinum wire 1.0 mm Dia

REFERENCE TOP OR SCIENTIFIC NOTEBOOK ENTRY

Page # 86 , Book # 604

AMOUNT OF SAMPLE 100 cm SIZE 1.0 mm dia

DATE OF SAMPLE RECEIPT (Mandatory) 10/07/03

DATE OF INITIAL LOG ENTRY (Mandatory) 10/07/03 BY Lietai Yang

SAMPLE STORAGE LOCATION (Mandatory) Building 57, Corrlab

COLLECTION SITE (Reference Maps or Field Notes As Required)

PERSON(S) WHO COLLECTED SAMPLE(S)

SUPPLIER Alfa Aesar

OTHER Note: This should only used as non-quality-affecting item such as counter electrode. L.Yang 1/18/05

CNWRA FORM TOP-004

Attachment A

CENTER FOR NUCLEAR WASTE REGULATORY ANALYSES TECHNICAL OPERATING PROCEDURE	Proc. TOP-012 Revision 1 Page 9 of 9

SAMPLE CUSTODY ENTRY FORM

SAMPLE IDENTIFICATION (Mandatory) Carbon steel wire

SAMPLE DESIGNATOR C1010 Carbon steel wire, 0.040" DIA

DESCRIPTION OF SAMPLE (Mandatory)
C1010 Carbon steel wire, 0.04" DIA

REFERENCE TOP or SCIENTIFIC NOTEBOOK ENTRY
Page 31, Book #423; Page 116, Book #497

AMOUNT of SAMPLE 396" + 100" SIZE 0.040" DIA

DATE of SAMPLE RECEIPT (Mandatory) 11/29/00 and 7/10/02

DATE of LOG ENTRY 5/20/03 by L. Yang

SAMPLE STORAGE LOCATION (Mandatory) Building 57, CorrLab

Collection site:

Supplier:

Other: Metal Samples, Confirmatory analysis was conducted with EDS, but not wet chemical analysis due to the amount of specimens.

CNWRA FORM TOP-004

See page 151 of book #497.
L. Yang 5/13/05

CENTER FOR NUCLEAR WASTE REGULATORY ANALYSES TECHNICAL OPERATING PROCEDURE	Proc. TOP-012 Revision 1 Page 9 of 9

SAMPLE CUSTODY ENTRY FORM

SAMPLE IDENTIFICATION (Mandatory) St. Steel wire, 1.0mm DIA

SAMPLE DESIGNATOR

DESCRIPTION OF SAMPLE (Mandatory)

St. Steel wire (304), 1.0 mm DIA

REFERENCE TOP or SCIENTIFIC NOTEBOOK ENTRY

Page 88-1, 88-2, Book #423

AMOUNT of SAMPLE 50 m SIZE 1.0 mm DIA

DATE of SAMPLE RECEIPT (Mandatory) 12/28/00

DATE of LOG ENTRY 5/20/03 by J. Yang

SAMPLE STORAGE LOCATION (Mandatory) Build. 57, CorrLab

Collection site:

Supplier: J.Y. 5/23/03

Other: ~~Good Fellow~~ GoodFellow

CNWRA FORM TOP-004 Confirmatory analysis was conducted see page 4 of Book #522

CNWRA Form TOP-2

J.Y.S. 5/13/05

CENTER FOR NUCLEAR WASTE REGULATORY ANALYSES TECHNICAL OPERATING PROCEDURE	Proc. TOP-012 Revision 1 Page 9 of 9

SAMPLE CUSTODY ENTRY FORM

SAMPLE IDENTIFICATION (Mandatory) St. Steel wire

SAMPLE DESIGNATOR

DESCRIPTION OF SAMPLE (Mandatory)

St: steel wire, (316), 1.0 mm DIA

REFERENCE TOP or SCIENTIFIC NOTEBOOK ENTRY

Page 177, Book # 423

AMOUNT of SAMPLE 50 m SIZE 1.0 mm dia

DATE of SAMPLE RECEIPT (Mandatory) 07/11/01

DATE of LOG ENTRY 5/20/03 by Lietai Yang

SAMPLE STORAGE LOCATION (Mandatory) Building 57, Corr Lab

Collection site:

Supplier: Good Fellow

Other: Confirmatory Analysis was conducted see page 153 of Book #497

CNWRA FORM TOP-004

L. Yang 5/18/03

CENTER FOR NUCLEAR WASTE REGULATORY ANALYSES TECHNICAL OPERATING PROCEDURE	Proc. TOP-012 Revision 1 Page 9 of 9

SAMPLE CUSTODY ENTRY FORM

SAMPLE IDENTIFICATION (Mandatory)

Alloy 276 tubing as sample for probe

SAMPLE DESIGNATOR M250-T10-N10276-0-0, ID 6505
~~Part # 653231-4~~

DESCRIPTION OF SAMPLE (Mandatory)
Part # A15961
Alloy 276 tubing used in E/R probe (ID 6505).

REFERENCE TOP or SCIENTIFIC NOTEBOOK ENTRY
P.O. 366153 J.y. 3/23/04

AMOUNT of SAMPLE ~~0.312" OD~~ 0.312" OD x 0.010" wall x 1.5" SIZE

DATE of SAMPLE RECEIPT (Mandatory) 12/26/2002

DATE of LOG ENTRY 03/23/2004 by J. Yang

SAMPLE STORAGE LOCATION (Mandatory) B57 Lab

Collection site:

Supplier:

Other: Corrpro. This is a test specimen for the probe. This specimen should be tested before the probe is used for NRC project.

CNWRA FORM TOP-004

J.Y. 5/18/05

CENTER FOR NUCLEAR WASTE REGULATORY ANALYSES TECHNICAL OPERATING PROCEDURE	Proc. TOP-012 Revision 1 Page 9 of 9

SAMPLE CUSTODY ENTRY FORM

SAMPLE IDENTIFICATION (Mandatory)

Alloy 825 tubing as sample for Probe

SAMPLE DESIGNATOR M2500-T10-N08825-0-0, ID 6504
Part # 65 3231-3

DESCRIPTION OF SAMPLE (Mandatory)
part # A15984
Alloy 825 tubing used in E/R probe (ID 6504).

REFERENCE TOP or SCIENTIFIC NOTEBOOK ENTRY
P.O. 366153.

AMOUNT of SAMPLE 0.321" OD X 0.010" Wall SIZE * 6" length.

DATE of SAMPLE RECEIPT (Mandatory) 12/26/2002

DATE of LOG ENTRY 03/23/2004 by L. Yang.

SAMPLE STORAGE LOCATION (Mandatory) B57 lab

Collection site:

Supplier: Corrpro

Other: To be used to verify the composition of the probe. This sample should be tested before the probe is used for NRC project.

CNWRA FORM TOP-004

L Yg. 5/18/05

CENTER FOR NUCLEAR WASTE REGULATORY ANALYSES TECHNICAL OPERATING PROCEDURE	Proc. TOP-012 Revision 1 Page 9 of 9

SAMPLE CUSTODY ENTRY FORM

SAMPLE IDENTIFICATION (Mandatory)

SAMPLE DESIGNATOR SS 316L tubing as sample for probe M2700-T10-531603-0-0, ID 6506

DESCRIPTION OF SAMPLE (Mandatory) Part # 653231-5
~~part~~ # A13093
SS 316L tubing used in Probe (ID 6506)

REFERENCE TOP or SCIENTIFIC NOTEBOOK ENTRY
P.O. 366153

AMOUNT of SAMPLE 0.312" OD x 0.010" wall x 6" length SIZE

DATE of SAMPLE RECEIPT (Mandatory) 12/26/2002

DATE of LOG ENTRY 03/23/2004 by J. Yang

SAMPLE STORAGE LOCATION (Mandatory) B57 lab.

Collection site:

Supplier: Compro

Other:

For verification of the material of probe. This sample should be tested before the probe is used for NRC project. J. Yang 5/18/07

CNWRA FORM TOP-004

CENTER FOR NUCLEAR WASTE REGULATORY ANALYSES

SAMPLE CUSTODY/CONTROL LOG ENTRY FORM

SAMPLE IDENTIFICATION (Mandatory) Alloy 276, 0.5 mm OD Wire

SAMPLE DESIGNATION LS214715BG / P.O. 183132S

DESCRIPTION OF SAMPLE (Mandatory)

Ni57/Mo17/Cr16/Fe/W/

REFERENCE TOP OR SCIENTIFIC NOTEBOOK ENTRY

page 88-1, Book #423

AMOUNT OF SAMPLE 10 m length SIZE 0.5 mm O.D.

DATE OF SAMPLE RECEIPT (Mandatory) 1/17/~~2000~~ 2001 L.Y. 6/12/06

DATE OF INITIAL LOG ENTRY (Mandatory) 6/12/06 BY L. Yang.

SAMPLE STORAGE LOCATION (Mandatory)

Building 57 Corrosion lab.

COLLECTION SITE (Reference Maps or Field Notes As Required)

PERSON(S) WHO COLLECTED SAMPLE(S)

SUPPLIER Good fellows

OTHER Confirmatory Analysis Req. # 04015441, Results see. page 152, Book #533. The results conform to ASTM B637-04 Acceptable.

L.Y. 6/12/06

CNWRA FORM TOP-004

CENTER FOR NUCLEAR WASTE REGULATORY ANALYSES

SAMPLE CUSTODY/CONTROL LOG ENTRY FORM

SAMPLE IDENTIFICATION (Mandatory) Alloy 276, 1.0 mm O.D. wire

SAMPLE DESIGNATION LS2 2350 EM/ P.O. 1844395

DESCRIPTION OF SAMPLE (Mandatory)

Ni 57/Mo17/Cr16/Fe/W/

REFERENCE TOP OR SCIENTIFIC NOTEBOOK ENTRY

Page 177 – Insert ①, Book 423.

AMOUNT OF SAMPLE 5 m Length SIZE 1.0 mm O.D.

DATE OF SAMPLE RECEIPT (Mandatory) 07/11/01

DATE OF INITIAL LOG ENTRY (Mandatory) 06/12/06 BY L. Yang

SAMPLE STORAGE LOCATION (Mandatory)

Building 57, Corr Lab.

COLLECTION SITE (Reference Maps or Field Notes As Required)

PERSON(S) WHO COLLECTED SAMPLE(S)

Good

SUPPLIER Good Fellow

OTHER

Confirmatory Analysis By. #04015441 (item #2).
Results shows out of tolerence. (page. 153, Book #533).
Sample re submitted. see page 100 of Bk#737. The results from June 30/2006 Analysis conforms to ASTM B575-04. Acceptible.

L.yang. 6/12/06

CNWRA FORM TOP-004

Material: Howard Street Tunnel Fire – SFPO

Page numbers: 293 - 301

CENTER FOR NUCLEAR WASTE REGULATORY ANALYSES TECHNICAL OPERATING PROCEDURE	Proc. TOP-012 Revision 1 Page 9 of 9

SAMPLE CUSTODY ENTRY FORM

SAMPLE IDENTIFICATION (Mandatory)
Roof Plate Car 50

SAMPLE DESIGNATOR

DESCRIPTION OF SAMPLE (Mandatory)
Section of Roof from Car 50 Howard Street tunnel fire

REFERENCE TOP or SCIENTIFIC NOTEBOOK ENTRY

AMOUNT of SAMPLE ~1 kg SIZE

DATE of SAMPLE RECEIPT (Mandatory) 10/7/2002

DATE of LOG ENTRY 10/11/2002 by Darrell Dunn

SAMPLE STORAGE LOCATION (Mandatory)
Bldg 57

Collection site:
Car 50 Howard Street tunnel Fire

Supplier:

Other:

CNWRA FORM TOP-004

CENTER FOR NUCLEAR WASTE REGULATORY ANALYSES TECHNICAL OPERATING PROCEDURE	Proc. TOP-012 Revision 1 Page 9 of 9

SAMPLE CUSTODY ENTRY FORM

SAMPLE IDENTIFICATION (Mandatory)
Cast Iron or Steel air brake body Car 52

SAMPLE DESIGNATOR

DESCRIPTION OF SAMPLE (Mandatory)
Cast iron or Steel air brake valve Body from Car 52 Howard Street Tunnel Fire

REFERENCE TOP or SCIENTIFIC NOTEBOOK ENTRY

AMOUNT of SAMPLE ~ 5 kg SIZE

DATE of SAMPLE RECEIPT (Mandatory) 10/7/2002

DATE of LOG ENTRY 10/11/2002 by Darrell Dunn

SAMPLE STORAGE LOCATION (Mandatory)
Bldg 57

Collection site:
Car 52 Howard Street Tunnel Fire

Supplier:

Other: Includes steel bolts Aluminum and Coupling hardware.

CNWRA FORM TOP-004

CENTER FOR NUCLEAR WASTE REGULATORY ANALYSES TECHNICAL OPERATING PROCEDURE	Proc. TOP-012 Revision 1 Page 9 of 9

SAMPLE CUSTODY ENTRY FORM

SAMPLE IDENTIFICATION (Mandatory)
Aluminum air brake valve body Car 52

SAMPLE DESIGNATOR

DESCRIPTION OF SAMPLE (Mandatory)
Partially melted aluminum air brake valve body Car 52 Howard Street Tunnel fire

REFERENCE TOP or SCIENTIFIC NOTEBOOK ENTRY

AMOUNT of SAMPLE ~ 700 g SIZE

DATE of SAMPLE RECEIPT (Mandatory) 10/7/2002

DATE of LOG ENTRY 10/11/2002 by Darrell Dunn

SAMPLE STORAGE LOCATION (Mandatory)
Bldg 57

Collection site:
Car 52 of train in Howard street tunnel fire

Supplier:

Other: Includes some steel bolts

CNWRA FORM TOP-004

CENTER FOR NUCLEAR WASTE REGULATORY ANALYSES TECHNICAL OPERATING PROCEDURE	Proc. TOP-012 Revision 1 Page 9 of 9

SAMPLE CUSTODY ENTRY FORM

SAMPLE IDENTIFICATION (Mandatory)
HOWARD STREET TUNNEL SAND RAIL 44X SOUTH EDGE

SAMPLE DESIGNATOR

DESCRIPTION OF SAMPLE (Mandatory)
SAND COLLECTED FROM HOWARD STREET TUNNEL
RAIL 44X

REFERENCE TOP or SCIENTIFIC NOTEBOOK ENTRY

AMOUNT of SAMPLE ~5 grams SIZE

DATE of SAMPLE RECEIPT (Mandatory) 9/2002

DATE of LOG ENTRY 10/7/2002 by DARRELL DUNN

SAMPLE STORAGE LOCATION (Mandatory)
BLDG 57

Collection site:
HOWARD STREET TUNNEL BALTIMORE MD

Supplier:

Other: MATERIAL EXPOSED TO HIGH TEMP

CNWRA FORM TOP-004

CENTER FOR NUCLEAR WASTE REGULATORY ANALYSES TECHNICAL OPERATING PROCEDURE	Proc. TOP-012 Revision 1 Page 9 of 9

SAMPLE CUSTODY ENTRY FORM

SAMPLE IDENTIFICATION (Mandatory)
HOWARD STREET TUNNEL SAND

SAMPLE DESIGNATOR

DESCRIPTION OF SAMPLE (Mandatory)
SAND COLLECTED FROM HOWARD STREET TUNNEL

REFERENCE TOP or SCIENTIFIC NOTEBOOK ENTRY

AMOUNT of SAMPLE ~5 grams SIZE

DATE of SAMPLE RECEIPT (Mandatory) 9/2002

DATE of LOG ENTRY 10/7/2002 by DARRELL DUNN

SAMPLE STORAGE LOCATION (Mandatory)
BLDG 57

Collection site:
HOWARD STREET TUNNEL BALTIMORE MD

Supplier:

Other: MATERIAL NOT SUBJECTED TO HIGH TEMP

CNWRA FORM TOP-004

CENTER FOR NUCLEAR WASTE REGULATORY ANALYSES TECHNICAL OPERATING PROCEDURE	Proc. TOP-012 Revision 1 Page 9 of 9

SAMPLE CUSTODY ENTRY FORM

SAMPLE IDENTIFICATION (Mandatory)
Rail Car 51 Scale

SAMPLE DESIGNATOR

DESCRIPTION OF SAMPLE (Mandatory)
Metal oxide scale from rail car #51

REFERENCE TOP or SCIENTIFIC NOTEBOOK ENTRY

AMOUNT of SAMPLE ~ 10 g SIZE various

DATE of SAMPLE RECEIPT (Mandatory) 9/2002

DATE of LOG ENTRY 10/7/2002 by Darrell Dunn

SAMPLE STORAGE LOCATION (Mandatory)
BLDG 57

Collection site:
Rail Car 51 from Howard street Tunnel

Supplier:

Other:

CNWRA FORM TOP-004

CENTER FOR NUCLEAR WASTE REGULATORY ANALYSES TECHNICAL OPERATING PROCEDURE	Proc. TOP-012 Revision 1 Page 9 of 9

SAMPLE CUSTODY ENTRY FORM

SAMPLE IDENTIFICATION (Mandatory)
New Al air brake body

SAMPLE DESIGNATOR

DESCRIPTION OF SAMPLE (Mandatory)
New air brake body same design as molten piece from car 52

REFERENCE TOP or SCIENTIFIC NOTEBOOK ENTRY

AMOUNT of SAMPLE ~ 600 g SIZE

DATE of SAMPLE RECEIPT (Mandatory) 10/14/2002

DATE of LOG ENTRY 10/20/2002 by Darrel Dunn

SAMPLE STORAGE LOCATION (Mandatory)
Bldg 57

Collection site:

Supplier:

Other: MELTED IN DIVISION 1 CURRENTLY STORED IN ASAR. CHOWDUNRY OFFICE BLDG 189

CNWRA FORM TOP-004

CENTER FOR NUCLEAR WASTE REGULATORY ANALYSES TECHNICAL OPERATING PROCEDURE	Proc. TOP-012 Revision 1 Page 9 of 9

SAMPLE CUSTODY ENTRY FORM

SAMPLE IDENTIFICATION (Mandatory)
NEW AIR BRAKE VALVE BOLTS

SAMPLE DESIGNATOR

DESCRIPTION OF SAMPLE (Mandatory)
NEW AIR BRAKE VALVE BOLTS. SAME AS FIRE DAMAGED BOLTS FROM CAR 52

REFERENCE TOP or SCIENTIFIC NOTEBOOK ENTRY

AMOUNT of SAMPLE 2 BOLTS SIZE

DATE of SAMPLE RECEIPT (Mandatory) 10/25/2002

DATE of LOG ENTRY 10/28/2002 by DARRELL DUNN

SAMPLE STORAGE LOCATION (Mandatory)
BLDG 57

Collection site:

Supplier:

Other:

CNWRA FORM TOP-004