UNITED STATES
NUCLEAR REGULATORY COMMISSION
OFFICE OF NUCLEAR REACTOR REGULATION
WASHINGTON, D.C. 20555

January 31, 1990

NRC INFORMATION NOTICE NO. 88-23, SUPPLEMENT 2: POTENTIAL FOR GAS BINDING OF HIGH-PRESSURE SAFETY INJECTION PUMPS DURING A LOSS-OF-COOLANT ACCIDENT

Addressees:

All holders of operating licenses or construction permits for pressurized water reactors (PWRs).

Purpose:

This information notice supplement is intended to alert addressees to potential problems resulting from the transport of hydrogen from the volume control tank (VCT) to the safety-related high-pressure injection (HPI) pumps during testing of the VCT outlet isolation valves. Both trains of high pressure injection could possibly be rendered inoperable during this operation. It is expected that recipients will review the information for applicability to their facilities and consider actions, as appropriate, to avoid similar problems. However, suggestions contained in this information notice do not constitute NRC requirements; therefore, no specific action or written response is required.

Description of Circumstances:

On October 30, 1989, during inservice testing of VCT outlet isolation valves at the Trojan Nuclear Plant, plant personnel discovered that both high-pressure injection pumps could be rendered inoperable if a safety injection signal (SIS) occurred while the manual "bypass" valve around the motor-operated VCT outlet isolation valves is opened (as specified by procedure). The test procedure involved timed opening and closing of VCT outlet isolation valves MO-112B and MO-112C (see Figure 1). In order to maintain HPI pump suction from the VCT during testing, the test procedure specified locking open manual valve 8484, bypassing the isolation valves.

An SIS causes MO-112D and MO-112E to open to align the HPI pump suction to the refueling water storage tank (RWST). An SIS also causes MO-112B and MO-112C to close after MO-112D and MO-112E are open to isolate the VCT from the HPI pumps' suction. If a safety injection signal is received while valve 8484 is open, the VCT would not be automatically isolated from the suction of the HPI pumps. If VCT hydrogen cover gas pressure were sufficiently high, suction of the pumps could be preferentially provided from the VCT, even though the pump suctions were aligned to the RWST. Hydrogen gas could then be entrained

9001250020
ADRIG NOTICE

into the HPI pumps, rendering them inoperable and possibly causing pump damage. The inservice test of MO-112B and MO-112C is performed quarterly. The total time manual bypass valve 8484 was open was 15 to 30 minutes each quarter.

Discussion:

The licensee evaluated a number of flow and pressure conditions that might occur following an SIS to determine when the VCT would be drained and the cover gas ingested into the HPI pumps' suction when the VCT isolation valves are bypassed. Conditions during a large-break loss-of-coolant accident (LOCA), a small-break LOCA, and a main steamline break were examined. The licensee determined that following a small-break LOCA, with low initial VCT pressure, the HPI pumps could continue to operate for up to 2 hours before gas entrainment would occur. However, for a large-break LOCA with an initial VCT pressure of 15 to 40 psig, the HPI pumps might be made inoperable by gas binding after as little as a minute of operation. Similar results were determined for a main steamline break.

The likelihood of HPI pump failure from VCT cover gas injection following an SIS would be exacerbated by inadvertent failure to close the 8484 valve after testing is completed. If the manual bypass valve were inadvertently left in the open position, both HPI trains could be unknowingly rendered inoperable for an extended period.

Test procedures for other valves are being reviewed by the licensee to determine if similar problems exist. At another utility, the VCT isolation valves are tested with the bypass line closed and the isolation valves in the RWST line to the HPI pump suction open to provide suction flow to the HPI pumps when the VCT isolation valves are cycled.

This information notice requires no specific action or written response. If you have any questions about the information in this notice, please contact one of the technical contacts listed below or the appropriate NRR project manager.

Charles E. Rossi

Charles E. Rossi, Director
Division of Operational Events Assessment
Office of Nuclear Reactor Regulation

Technical Contacts: L. Mark Padovan, AEOD
(301) 492-4445

Walton Jensen, NRR
(301) 492-1190

Attachments:
1. Figure 1, Charging System Overview
2. List of Recently Issued NRC Information Notices

Figure 1

CHARGING SYSTEM OVERVIEW

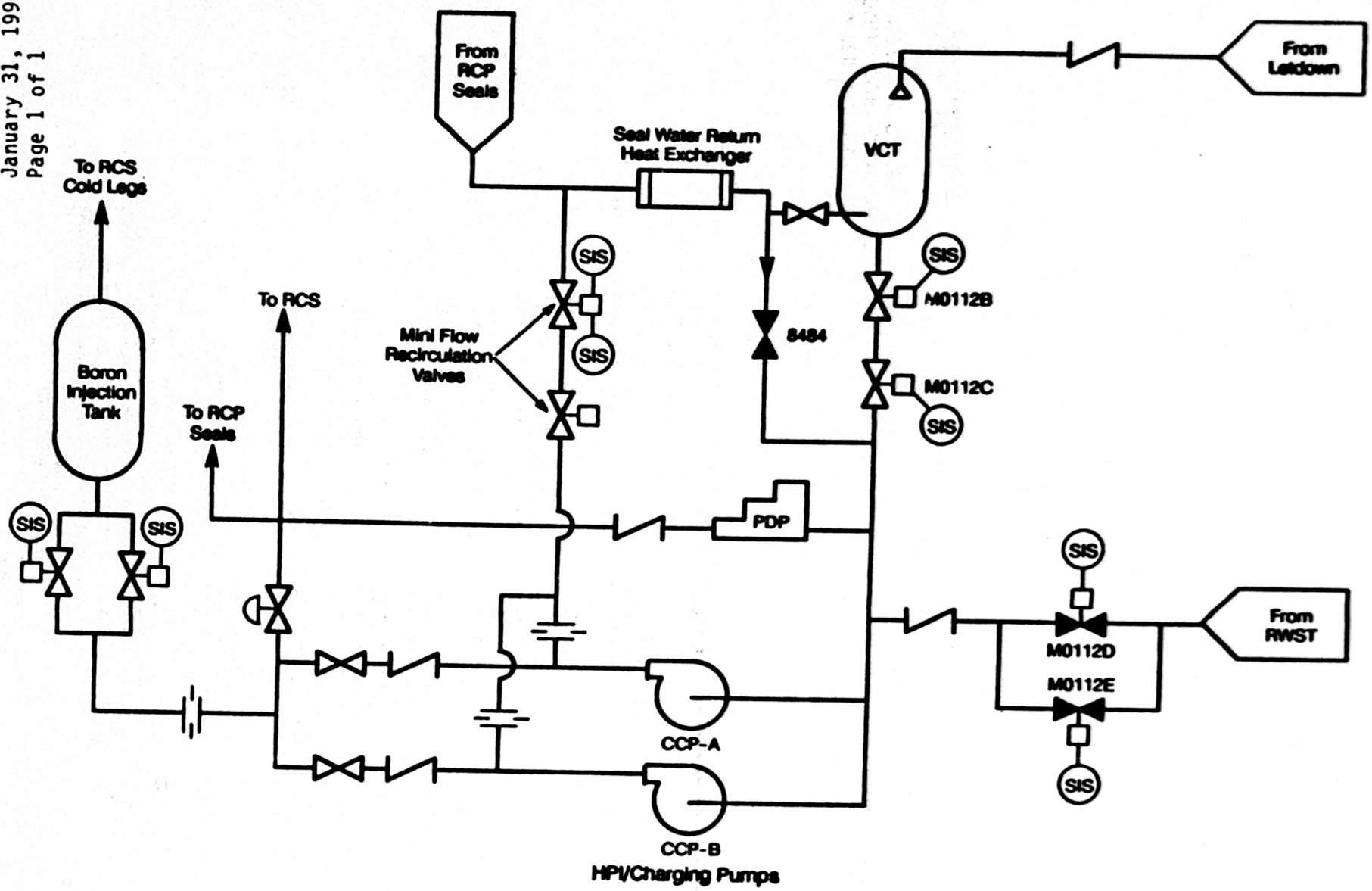

LIST OF RECENTLY ISSUED
NRC INFORMATION NOTICES

Information Notice No.	Subject	Date of Issuance	Issued to
90-07	New Information Regarding Insulation Material Performance and Debris Blockage of PWR Containment Sumps	1/30/90	All holders of OLs or CPs for nuclear power reactors.
90-06	Potential for Loss of Shutdown Cooling While at Low Reactor Coolant Levels	1/29/90	All holders of OLs or CPs for nuclear power reactors.
90-05	Inter-System Discharge of Reactor Coolant	1/29/90	All holders of OLs or CPs for nuclear power reactors.
90-04	Cracking of the Upper Shell-to-Transition Cone Girth Welds in Steam Generators	1/26/90	All holders of OLs or CPs for Westinghouse-designed and Combustion Engineering-designed nuclear power reactors.
90-03	Malfunction of Borg-Warner Bolted Bonnet Check Valves Caused by Failure of the Swing Arm	1/23/90	All holders of OLs or CPs for nuclear power reactors.
90-02	Potential Degradation of Secondary Containment	1/22/90	All holders of OLs or CPs for BWRs.
90-01	Importance of Proper Response to Self-Identified Violations by Licensees	1/12/90	All holders of NRC materials licenses.
89-90	Pressurizer Safety Valve Lift Setpoint Shift	12/28/89	All holders of OLs or CPs for PWRs.
89-89	Event Notification Worksheets	12/[illegible]/89	All holders of OLs or CPs for nuclear power reactors.
89-88	Recent NRC-Sponsored Testing of Motor-Operated Valves	12/26/89	All holders of OLs or CPs for nuclear power reactors.

OL = Operating License
CP = Construction Permit

UNITED STATES
NUCLEAR REGULATORY COMMISSION
WASHINGTON, D.C. 20555

OFFICIAL BUSINESS
PENALTY FOR PRIVATE USE, $300

FIRST CLASS MAIL
POSTAGE & FEES PAID
USNRC

PERMIT No G-67

XXXXXXXXXXXXXXXXXXXXXXXXXXXXXX XXXXXXXXXXXXXXXXXXXXXXXXXXXXXX XXXXXXXXXXXXXX

GROUP # 01 TYPE LABELS - 3 SELECTION-10000000 SETS - 01 WO# N16553 WO
NRC: CNT = 235 BULK = 241 TOT: CNT = 1950 BULK = 2172 DATE COMPLETED
1C01CY1FB11M11S11V11B11R1CV19L

****
XXXXXXXXXXXXXXXXXXXXXXXXXXXXXX

GROUP # 01 TYPE LABELS - 3 SELECTION-10000000 SETS - 01 WO# N16553 WO
NRC: CNT = 235 BULK = 241 TOT: CNT = 1950 BULK = 2172 DATE COMPLETED
1C01CY1FB11M11S11V11B11R1CV19L

****
XXXXXXXXXXXXXXXXXXXXXXXXXXXXXX

GROUP # 01 TYPE LABELS - 3 SELECTION-10000000 SETS - 01 WO# N16553 WO
NRC: CNT = 235 BULK = 241 TOT: CNT = 1950 BULK = 2172 DATE COMPLETED
1C01CY1FB11M11S11V11B11R1CV19L

****

120036105333 1 1C01CY1FB11M1
ERNST & WHINNEY UTILITY GROUP
LIBRARIAN
1225 CONNECTICUT AVENUE N W
WASHINGTON DC 20036

111581092043 1 1C01CY1FB11M1
S ANDIMAN
CONSULTANT
20 KALMIA LA
VALLEY STREAM NY 11581

111788139743 1 1C01CY1FB11M1
THOMAS E BOYLE
SUFFOLK COUNTY ATTORNEY
VETERANS MEMORIAL HIGHWAY
HAUPPAUGE NY 11788

197206095821 1 1C01CY1FB11M1
RICK BROWN
4600 SE HARNEY DR
PORTLAND OR 97206

174467140137 1 1C01CY1FB11M1
BRENDA J CARPENTER
RT 2 - BOX 407
WAGONER OK 74467

147250030048 1 1C01CY1FB11M1
THOMAS M DATTILO
311 E MAIN STREET
MADISON IN 47250

160634082093 1 1C01CY1FB11M1
DAVID DERENZO
6027 W ROSCOE ST
CHICAGO IL 60634

189119140643 1 1C01CY1FB11M1
BRUCE B DICEY
RADIATION SAFETY MGR
2302 ROUNDUP
LAS VEGAS NV 89119

1SPAIN107532 1 1C01CY1FB11M1
JQ SANCHEZ BAPTISTA
FRANCISCO ALOMAR
TRES TORRES,7
08017 BARCELONA SPAIN

106092137320 1 1C01CY1FB11M1
FRANK BEVILACQUA
NUCLEAR CONSULTANT
BOX 609
W SIMSBURY CT 06092

178232102930 1 1C01CY1FB11M1
WILLIAM A BRANT
827 ARIZONA ASH
SAN ANTONIO TX 78232

119035140063 1 1C01CY1FB11M1
DR. S P CARFAGNO
1616 RIVERVIEW RD
GLADWYNE PA 19035

194563138783 1 1C01CY1FB11M1
JAMES C CARROLL
ACRS MEMBER
ONE GREENWOOD CT
ORINDA CA 94563

192662137185 1 1C01CY1FB11M1
D D DAVIS
908 SO BAY FRONT
BALBOA IS CA 92662

122031138454 1 1C01CY1FB11M1
NIKHIL DESAI
ICF INCORPORATED
9300 LEE HIGHWAY
FAIRFAX VA 22031

102181111112 1 1C01CY1FB11M1
JOHN F DOHERTY
C/O CASANOVA
18 MAUGUS AVE
SUITE 3A
WELLESLEY HILLS MA 02181

137830137265 1 1C01CY1FB11M1
QUALITY ENGINEERING ASSOCIATES
JOHN H DOYLE
149 N SENECA RD
OAK RIDGE TN 37830

118042063132 1 1C01CY1FB11M1
CHARLES W ELLIOTT
325 N 10TH ST
EASTON PA 18042

140578064892[illegible] 1 1C01CY1FB11M1
GEORGE E EVANS, JR.
SPECIAL ASST TO GOVERNOR
ENERGY CABINET - PO BOX 11888
LEXINGTON KY 40578

160630080001 1 1C01CY1FB11M1
JOHN J FINERTY
5055 W WINDSOR AVE
CHICAGO IL 60630

192672141227 1 1C01CY1FB11M1
SAMUEL B FUNK
2333 CALLE BALANDRA
SAN CLEMENTE CA 92672

111201139501 1 1C01CY1FB11M1
JUDITH GEVANTMAN
57 MONTAGUE ST - #10D
BROOKLYN HEIGHTS NY 11201

193704077497 1 1C01CY1FB11M1
JOHN F GIBSON
5362 N SAN PABLO
APT 104
FRESNO CA 93704

130058104480 1 1C01CY1FB11M1
MORRIS V GURNELL
FIRE PROTECTION ENGINEER
1291 SILVER SPUR COURT
LITHONIA GA 30058

122963138127 1 1C01CY1FB11M1
ANDREW HOGG
47 HARDWOOD RD
PALMYRA VA 22963

119446139645 1 1C01CY1FB11M1
PAUL KAUFMAN
421 SHOEMAKER WAY
LANSDALE PA 19446

192675139653 1 1C01CY1FB11M1
DONALD A LEGER
26378 SMOKETREE LANE
SAN JUAN CAPISTRANO CA 92675

163130040077 1 1C01CY1FB11M1
LEO DREY
515 WEST POINT AVENUE
UNIVERSITY CITY MO 63130

192675140088 1 1C01CY1FB11M1
STEVEN ELTISTE
28006 PASEO REPOSO
SAN JUAN CAPISTRANO CA 92675

120850139914 1 1C01CY1FB11M1
JOSEPH M FELTON
200-A MONROE ST
SUITE 225
ROCKVILLE MD 20850

185282062527 1 1C01CY1FB11M1
WILLIAM G FISHER
2082 EAST BALBOA DR
TEMPE AZ 85282

194585137538 1 1C01CY1FB11M1
FRANK GEE
613 KINGLET ST
SUISUN CITY CA 94585

115068106406 1 1C01CY1FB11M1
PHILIP GIANUTSOS
HEALTH PHYSICIST
251 WIDMER AVE
LOWER BURRELL PA 15068

139205105270 1 1C01CY1FB11M1
MICHAEL GOFF
SPECIAL ASST-NATURAL RESOURCES
GOVERNOR'S OFFICE - PO BOX 139
JACKSON MS 39205

1440600[illegible]628 1 1C01CY1FB11M1
SUSAN L HIATT
OCRE REPRESENTATIVE
8275 MUNSON RD
MENTOR OH 44060

107012093831 1 1C01CY1FB11M1
H C JUNG
CONSULTANT
23 DIANNE CT
CLIFTON NJ 07012

111733104715 1 1C01CY1FB11M1
GARY L KRIEGER
22 HUYLER RD
SETAUKET NY 11733

119152109186 1 1C01CY1FB11M1
MARVIN LEWIS
7801 ROOSEVELT BLVD, #62
PHILADELPHIA PA 19152

1SPAIN107522 1 1C01CY1FB11M1
XAVIER LLAURO
GONZALEZ DE SOTO, 17
17600 FIGUERES SPAIN

143624139801 1 1C01CY1FB11M1
TERRY LODGE
618 N MICHIGAN ST
TOLEDO OH 43624

191745141225 1 1C01CY1FB11M1
DANIEL J LOVE
16300 E SORIANO DR
HACIENDA HGTS CA 91745

178711138680 1 1C01CY1FB11M1
AUBURN L MITCHELL
OFC OF GOVERNOR - PO BOX 12428
AUSTIN TX 78711

190024077560 1 1C01CY1FB11M1
DAVID OKRENT
CONSULTANT
UNIV OF CA, 5532 BOELTER HALL
LOS ANGELES CA 90024

170808055135 1 1C01CY1FB11M1
ROY A PARKER
5061 ABELIA DR
BATON ROUGE LA 70808

170806091020 1 1C01CY1FB11M1
H A PLETTINGER
3456 VILLA ROSE DR
BATON ROUGE LA 70806

118914109690 1 1C01CY1FB11M1
ABB POWER DISTRIBUTION INC
E W RHOADS
QA DIRECTOR
4379 COUNTY LINE RD
CHALFONT PA 18914

177083105990 1 1C01CY1FB11M1
DELMAR E RUSSELL
15238 ENSENADA DR
HOUSTON TX 77083

185071139303 1 1C01CY1FB11M1
STEPHEN H SHEPHERD
OWNER
P.O BOX 83682
PHOENIX AZ 85071

194610139483 1 1C01CY1FB11M1
PAUL D SMITH
1408 GRAND AVENUE
PIEDMONT CA 94610

115963139754 1 1C01CY1FB11M1
WILLIAM A LOCHSTET
RD 1, BOX 117, ASHTOLA DR
WINDBER PA 15963

191745140138 1 1C01CY1FB11M1
DANIEL J LOVE
16300 E SORIANO DR
HACIENDA HEIGHTS CA 91745

144060138729 1 1C01CY1FB11M1
VITCO NUCLEAR PRODUCTS INC
STEVE MARSH
QUALITY ENGINEERING
8171 TYLER BLVD
MENTOR OH 44060

119147139887 1 1C01CY1FB11M1
RICHARD MYERS
740 CATHARINE ST
PHILADELPHIA PA 19147

115228095942 1 1C01CY1FB11M1
PITTSBURGH HEALTH PHYSICS
FRANK P OTTINO
PRESIDENT
330 PARKWAY DR
PITTSBURGH PA 15228

119382100821 1 1C01CY1FB11M1
JOSEPHINE M PICCONE
1119 DORSET DR
WEST CHESTER PA 19382

102343142295 1 1C01CY1FB11M1
GERALD M QUINN
12 KING RD
HOLBROOK MA 02343

115065092186 1 1C01CY1FB11M1
MELVIN RUEDIGER
PO BOX 204
NATRONA HEIGHTS PA 15065

177450137294 1 1C01CY1FB11M1
ROANLD V SCHEELE
RADIATION PHYSICIST
926 CASWELL CT
KATY TX 77450

143220029417 1 1C01CY1FB11M1
PAUL G SHEWMON
2477 LYTHAM RD
ACRS
COLUMBUS OH 43220

128461109517 1 1C01CY1FB11M1
R B STARKEY JR
SITE MANAGER
BX 10429 BRUNSWICK NUC PROJECT
SOUTHPORT NC 28461

192028140091 1 1C01CY1FB11M1
GARY B SWIFT
1007 QUAIL KNOLL RD
FALLBROOK CA 92028

194025140084 1 1C01CY1FB11M1
FRED A WEBSTER
CONSULTANT
PO BOX 4043
MENLO PARK CA 94025

120853139691 1 1C01CY1FB11M1
ROBERT L WOOLLEY
15100 WESTBURY RD
ROCKVILLE MD 20853

105354139730 1 1C01CY1FB11M1
WALTER ZALUZNY
CHAIRMAN-BOARD OF SELECTMAN
PO BOX 116
VERNON VT 05354

117405091371 1 1C01CY1FB11M1
A C VALVE INC
VALVE OPERATIONS
JAMES THOMPSON
25 WINSHIP ROAD
POB M93
YORK PA 17405

102140109557 1 1C01CY1FB11M1
ADLPIPE INC
2 TYLER COURT
CAMBRIDGE MA 02140

199352001686 1 1C01CY1FB11M1
ADVANCED NUCLEAR FUELS CORP
RESEARCH & TECHNOLOGY CENTER
LIBRARIAN
2101 HORN RAPIDS ROAD
LIBRARY
RICHLAND WA 99352

160126139710 1 1C01CY1FB11M1
ADVANCED TECH ENGR SYSTEMS INC
MARK MCGOUGH
360 W BUTTERFIELD RD
SUITE 320
ELMHURST IL 60126

122091110347 1 1C01CY1FB11M1
ADVANCED TECHNOLOGY ENGR SYS
MICHAEL WHITE
12005 SURRISE VALLEY DR
M/D C-3.02
RESTON VA 22091

194549058789 1 1C01CY1FB11M1
AEROTEST OPERATIONS INC
RICHARD L NEWACHECK
CONSULTANT
819 MOUNTAIN VIEW DRIVE
149
LAFAYETTE CA 94549

172203063658 1 1C01CY1FB11M1
AFCO STEEL INC
E J HOSEY
QA MANAGER
1423 E 6TH ST PO BOX 231
LITTLE ROCK AR 72203

1CANAD079706 1 1C01CY1FB11M1
CHRIS TOOMEY
37 LOCKDARE STREET--AGINCOURT
ONTARIO M1S 2Z5 CANADA

151555110853 1 1C01CY1FB11M1
ROBERT W WENTWORTH
RR 2 BOX 32D
MISSOURI VALLEY IA 51555

127560079702 1 1C01CY1FB11M1
WILLIAM M YEAGER
BOX 33 ROUTE 1
MORRISVILLE NC 27560

1AUSTR138786 1 1C01CY1FB11M1
PATRICIA ZUNIGA
HARMONIEGASSE 4/9
1090 WIEN AUSTRIA

122070138694 1 1C01CY1FB11M1
ABZ INC
EDWARD C ABBOTT
1175 HERNDON PKWY
SUITE 150
HERNDON VA 22070

199352082403 1 1C01CY1FB11M1
ADVANCED NUCLEAR FUELS CORP
RELOAD FUEL LICENSING
MANAGER
2101 HORN RAPIDS RD
PO BOX 130
RICHLAND WA 99352

199352091498 1 1C01CY1FB11M1
ADVANCED NUCLEAR FUELS CORP
QA
C J VOLMER
2101 HORN RAPIDS RD
MS-32
RICHLAND WA 99352

130328093994 1 1C01CY1FB11M1
ADVANCED TECHNOLOGY ENGR SYS
4 CONCOURSE PKWY
SUITE 2150
ATLANTA GA 30328

193583103310 1 1C01CY1FB11M1
AEROTEST OPERATIONS INC
PRESIDENT
3455 FOSTORIA WAY
SAN RAMON CA 93583

196088142035 1 1C01CY1FB11M1
AETA
MANAGEMENT SERVICES
JAYNE FRENCHBUTHMANN
DIRECTOR
32931 EMIGRANT TRAIL
SHINGLETOWN CA 96088

106804110606 1 1C01CY1FB11M1
AHL ANALYTICAL
ADAM H LEVIN
PRESIDENT
33 OAK GROVE RD
BROOKFIELD CT 06804

136104139796 1 1C01CY1FB11M1
ALABAMA DEPT OF PUBLIC HEALTH
STATE HEALTH OFFICER
STATE OFFICE BUILDING
MONTGOMERY AL 36104

136130056611 1 1C01CY1FB11M1
ALABAMA DEPT OF PUBLIC HEALTH
ENVIRONMENTAL HEATH ADMIN
AUBREY GODWIN
CHIEF-BUREAU OF RAD HEALTH
510 STATE OFC BLDG
MONTGOMERY AL 36130

136319080531 1 1C01CY1FB11M1
ALABAMA POWER CO
FARLEY 1 NPS
GENERAL MANAGER
COLUMBIA AL 36319

135291109558 1 1C01CY1FB11M1
ALABAMA POWER CO
NUCLEAR GENERATION
W G HARISTON III
SENIOR VICE PRESIDENT
PO BOX 2641
BIRMINGHAM AL 35291

135201141001 1 1C01CY1FB11M1
ALABAMA POWER CO
FARLEY PROJECT
ROZELL HARRIS
PO BOX 1295
BIN B031
BIRMINGHAM AL 35201

135291140919 1 1C01CY1FB11M1
ALABAMA POWER CO
R P MCDONALD
VICE PRESIDENT
P.O. BOX 2641
BIRMINGHAM AL 35291

116157140660 1 1C01CY1FB11M1
ALARON CORP
WILLIAM DARBYSHIRE
RD 2 - BOX 2140A
WAMPUM PA 16157

116046141673 1 1C01CY1FB11M1
ALARON CORP
NORTHEAST REGIONAL OFFICES
WILLIAM DARBYSHIRE
120 MARGUERITE DR
SUITE 203
MARS PA 16046

199811011192 1 1C01CY1FB11M1
ALASKA DEPT OF ENVIRON CONSERV
DENNIS D KELSO
COMMISSIONER
PO BOX 0
JUNEAU AK 99811

136331091368 1 1C01CY1FB11M1
ALFAB INC
BRUCE GRANTHAM
QA MANAGER
PO BOX 1334
ENTERPRISE AL 36331

117108103912 1 1C01CY1FB11M1
ALLEGHENY ELEC COOPERATIVE INC
JESSE TILTON
PRESIDENT
PO BOX 1266
HARRISBURG PA 17108

129812025953 1 1C01CY1FB11M1
ALLIED GENERAL NUC SERVICES
J A BUCKHAM
PO BOX 847
BARNWELL SC 29812

117331091434 1 1C01CY1FB11M1
ALLOY RODS INC
T R HOCKER
QA MANAGER
WILSON AVE PO BOX 517
HANOVER PA 17331

107054137524 1 1C01CY1FB11M1
ALPHA OMEGA TECH INC
FOREIGN OPERATIONS
CRAIG BARNETT
DIRECTOR ENGR SERVICES
1279 ROUTE 46
PARSIPPANY NJ 07054

102110137984 1 1C01CY1FB11M1
ALTRAN CORP
E F TRAINOR
VICE PRESIDENT
184 HIGH ST
BOSTON MA 02110

110017138726 1 1C01CY1FB11M1
AMER SOCIETY MECHANICAL ENGRS
NUCLEAR CODES & STANDARDS
JUNE LING
DIRECTOR
345 EAST 47TH ST
NEW YORK NY 10017

107039139201 1 1C01CY1FB11M1
AMERACE CORP
INDUSTRIAL ELECTRICAL PRODUCTS
JOSEPH FERGUSON
DIRECTOR QUALITY ASSURANCE
530 W MT PLEASANT AVE
LIVINGSTON NJ 07039

107039139275 1 1C01CY1FB11M1
AMERACE CORP
QUALITY ASSURANCE
JOSEPH FERGUSON
DIRECTOR
530 W MT PLEASANT AVE
LIVINGSTON NJ 07039

106032031448 1 1C01CY1FB11M1
AMERICAN NUCLEAR INSURERS
LIBRARY
DOTTY SHERMAN
270 FARMINGTON AVE
SUITE 245
FARMINGTON CT 06032

143528141983 1 1C01CY1FB11M1
AMERICAN WARMING & VENT INC
DONALD SLOAN
QA MANAGER
7301 INTERNATIONAL DR
HOLLAND OH 43528

166110064696 1 1C01CY1F311M1
AMERICOLD RECORDS STORAGE CTR
MARY CONE
MANAGER
6500 INLAND DRIVE
KANSAS CITY KS 66110

170809142066 1 1C01CY1FB11M1
AMERSHAM CORP
GAMMA DIVISION
ATTN: GENERAL MANAGER
6134 HOLLYFIELD DR
BATON ROUGE LA 70809

160005140053 1 1C01CY1FB11M1
AMERSHAM CORP
BRYAN W BAKER
2636 S CLEARBROOK DR
ARLINGTON HEIGHTS IL 60005

117701091379 1 1C01CY1FB11M1
ANCHOR DARLING VALVE CO
J J CHAPPELL
MANAGER-ENGINEERING
PO BOX 3428
WILLIAMSPORT PA 17701

194025103328 1 1C01CY1FB11M1
ANCHOR DARLING VALVE CO
SALES DIVISION
R T MEEK
VICE PRESIDENT
1050 TRINITY DR
MENLO PARK CA 94025

177081106654 1 1C01CY1FB11M1
ANDERSON GREENWOOD & CO
FRANK PIZZITOLA
DIRECTOR OF QUALITY
5425 SOUTH RICE AVE
2-800
HOUSTON TX 77081

163118094226 1 1C01CY1FB11M1
ANHEUSER-BUSCH CO
ENVIRON ENGR & RESOURCES
ROBERT LANHAM
ONE BUSCH PL
202-4
ST LOUIS MO 63118

1ITALY091412 1 1C01CY1FB11M1
ANSALDO COMPONENTI S.P.A.
DIVISIONE GENERAZIONE VAPORE
SIGNORE T BADINO
QA MANAGER
VIALE SARCA 336
MILANO 20126 MI ITALY

134684139647 1 1C01CY1FB11M1
APEX TECHNOLOGIES INC
JOHN T HAYHURST
PROJECT MANAGER
2323 MALCOLM DRIVE
PALM HARBOR FL 34684

129116103171 1 1C01CY1FB11M1
APPLIED ENGINEERING CO INC
RANDALL C SCHLAMP
QA MANAGER
PO BOX 1327
ORANGEBURG SC 29116

131513142333 1 1C01CY1FB11M1
APPLING COUNTY PUBLIC LIBRARY
WYNELL BUSH
LIBRARIAN
301 CITY HALL DRIVE
BAXLEY GA 31513

194089117402 1 1C01CY1FB11M1
APTECH ENGINEERING SERVICES
SAT MAHAJAN
1257 ELKO DRIVE
SUNNYVALE CA 94089

183403137637 1 1C01CY1FB11M1
ARGONNE NATIONAL LABORATORY
SECURITY MANAGER
PO BOX 2528 - BUILDING 701
IDAHO FALLS ID 83403

137923140079 1 1C01CY1FB11M1
ANALYSIS & MEASUREMENT SVCS CO
KENT M PETERSEN
OPERATIONS MANAGER
9111 CROSS PARK DR NW
KNOXVILLE TN 37923

117701091380 1 1C01CY1FB11M1
ANCHOR DARLING VALVE CO
G W KNIESER
QA MANAGER
701 FIRST ST PO BOX 3428
WILLIAMSPORT PA 17701

190720141168 1 1C01CY1FB11M1
ANCO ENGINEER INC
NUCLEAR SERVICES
LEN LEONARD
MGR FILTERS & SERVICES
10631 BLOOMFIELD AVE UNIT 15
LOS ALAMITOS CA 90720

177402140645 1 1C01CY1FB11M1
ANDERSON GREENWOOD & CO
LOU SPRECHER
MGR, POWER PRODUCTS
PO BOX 1097
BELLAIRE TX 77402

1JAPAN093730 1 1C01CY1FB11M1
ANRE, MITI
NUCLEAR PWR SAFETY ADM DIV
ITSURO MISUMI
ADMINISTRATOR-
1 3 1 KASUMIGASEKI
CHIYODA-KU TOKYO 100 JAPAN

1ITALY081551 1 1C01CY1FB11M1
ANSALDO SPA DBGV
TULLIO BADINO
DQP MANAGER
VIALE SARCA 336
MILANO 20126 ITALY

101801141647 1 1C01CY1FB11M1
APPLIED CONSULTANTS INC
JOSEPH LISCHINSKY
PRESIDENT
165 NEW BOSTON ST STE 246
WOBURN MA 01801

1 3154109912 1 1C01CY1FB11M1
APPLIED POWER ASSOCIATES INC
LIBRARIAN
10810 FARNAM DRIVE
SUITE 300
OMAHA NE 68154

160504139323 1 1C01CY1FB11M1
APS NUCLEAR
NUCLEAR DIV
JAY M DAVIS
444 COMMERCE ST
SUITE 120
AURORA IL 60504

102149091515 1 1C01CY1FB11M1
APV GAULIN INC
REGIS BUPP
QA MANAGER
44 GARDEN ST
EVERETT MA 02149

183403103690 1 1C01CY1FB11M1
ARGONNE NATIONAL LABORATORY
OFFICE OF NUCLEAR SAFETY
PO BOX 2528
IDAHO FALLS ID 83403

160439066235 1 1C01CY1FB11M1
ARGONNE NATIONAL LABORATORY
REPORT SECTION
9700 S CASS AVE
203-CE125
ARGONNE IL 60439

160439103509 1 1C01CY1FB11M1
ARGONNE NATIONAL LABORATORY
OFFICE OF QA & SAFETY
JAMES H TALBOY
QUALITY ASSURANCE & SAFETY OFC
9700 S CASS AVE
ARGONNE IL 60439

121401138086 1 1C01CY1FB11M1
ARINC RESEARCH CORPORATION
CHRISTINE REILLY
2551 RIVA RD
ANNAPOLIS MD 21401

135040107922 1 1C01CY1FB11M1
ARIZONA RADIAT REGULATORY AGCY
CHARLES F TEDFORD
DIRECTOR
4814 SOUTH 40 ST
SUITE 2
PHOENIX AZ 85040

172203093192 1 1C01CY1FB11M1
ARKANSAS POWER & LIGHT CO
NUCLEAR OPERATIONS
GENE CAMPBELL
VICE PRESIDENT
PO BOX 551
LITTLE ROCK AR 72203

172801064687 1 1C01CY1FB11M1
ARKANSAS POWER & LIGHT CO
JESSALYN DAVIS
OFFICE SVCS SUPERINTENDENT
RT 3 BOX 137G
RUSSELLVILLE AK 72801

120814079398 1 1C01CY1FB11M1
ARMED FORCES RADIOBIO RES INST
RADIATION SOURCES DEPT R
CHARLES GALLEY
CHAIRMAN RDS DEPT
BETHESDA NAVY MEDICAL CTR
BETHESDA MD 20814

120814079397 1 1C01CY1FB11M1
ARMED FORCES RADIOBIO RES INST
REACTOR DIVISION
MARK MOORE
REACTOR FACILITY DIRECTOR
AFRRI-RSD
BETHESDA MD 20814

195201139318 1 1C01CY1FB11M1
ASCO/DELTA
KEN SCHWARTZ
MANAGER-ENGINEERING
PO BOX 1995
STOCKTON CA 95201

118106103648 1 1C01CY1FB11M1
ASEA BROWN BOVERI
PROTECTIVE RELAY DIV
R CONRAD
QA MANAGER
35 N SNOWDRIFT RD
ALLENTOWN PA 18106

133707111204 1 1C01CY1FB11M1
ASSOCIATED POWER SYSTEMS INC
EDMUND C EGLINTON
PRESIDENT
5500 CENTRAL AVE #A
ST PETERSBURG FL 33707

183403103606 1 1C01CY1FB11M1
ARGONNE NATIONAL LABORATORY
TECHNICAL LIBRARY
P O BOX 2528
IDAHO FALLS ID 83403

160439005948 1 1C01CY1FB11M1
ARGONNE NATIONAL LABORATORY
MCT-212
R W WEEKS
9700 SOUTH CASS AVENUE
ARGONNE IL 60439

185072104778 1 1C01CY1FB11M1
ARIZONA NUCLEAR POWER PROJECT
W F CONWAY
EXECUTIVE VICE PRESIDENT
PO BOX 52034
M/S-7012
PHOENIX AZ 85072

172205107536 1 1C01CY1FB11M1
ARKANSAS DEPT OF HEALTH
RADIATION CONTROL PROGS
GRETA J DICUS
DIRECTOR
4815 W MARKHAM ST
LITTLE ROCK AR 72205

172203005004 1 1C01CY1FB11M1
ARKANSAS POWER & LIGHT CO
ENERGY SUPPLY
T G CAMPBELL
SR VICE PRESIDENT
PO BOX 551
LITTLE ROCK AR 72203

132785052928 1 1C01CY1FB11M1
ARMCO INC
STAINLESS STEEL DIV
ROBERT W SCHULTZ
QUALITY ASSURANCE SUPV
RT 2 BOX 1A
WILDWOOD FL 32785

120814062966 1 1C01CY1FB11M1
ARMED FORCES RADIOBIO RES INST
DIRECTORS OFFICE MAND
GEORGE W IRVING III
DIRECTOR AFRRI
BETHESDA NAVY MED CTR NNMC
BETHESDA MD 20814

195003067159 1 1C01CY1FB11M1
ARREMONY ASSOCIATES
NDE SUPPORT SERVICES
DON ARREMONY
240 RIO DEL MAR BLVD #E
APTOS CA 95003

144141141663 1 1C01CY1FB11M1
ASCOA FIRE SYSTEMS
JOHN J GULLO JR
DIRECTOR QUALITY ASSURANCE
PO BOX 418012
CLEVELAND OH 44141

1SPAIN103814 1 1C01CY1FB11M1
ASOCIACION NUCLEAR VANDELLOS
PROYECTO C N VANDELLOS II
MIGUEL CAMPS
DIRECTOR
TRAVESSERA DE LES CORTS
39 43 BARCELONA 28 SPAIN

119355142298 1 1C01CY1FB11M1
ASTA ENGINEERING
DIANE DIPASQUALE
325 TECHNOLOGY DR
MALVERN PA 19355

135611104213 1 1C01CY1FB11M1
ATHENS PUBLIC LIBRARY
MAUDE S MILLER
HEAD LIBRARIAN
SOUTH ST
ATHENS AL 35611

108232092197 1 1C01CY1FB11M1
ATLANTIC CITY ELECTRIC CO
PRODUCTION
HENRY C SCHWEMM, JR.
VICE PRESIDENT
1199 BLACK HORSE PIKE-BOX 1500
PLEASANTVILLE NJ 08232

108232105093 1 1C01CY1FB11M1
ATLANTIC CITY ELECTRIC CO
JOINT GEN
S B UNGERER
MGR JOINT GEN PROJ
P O BOX 1500
PLEASANTVILLE NJ 08232

1CANAD091227 1 1C01CY1FB11M1
ATOMIC ENERGY CONTROL BOARD
EVENTS ANALYSIS GROUP
RICHARD FERCH
PO BOX 1046
OTTAWA K1P 5S9 CANADA

1TAIWA103688 1 1C01CY1FB11M1
ATOMIC ENERGY COUNCIL
NUCLEAR REGULATORY DIVISION
DOR-YU HSIA
67 LANE 144 KEELUNG RD
SECT 4
TAIPAI 107 TAIWAN

1CANAD056819 1 1C01CY1FB11M1
ATOMIC ENERGY OF CANADA LTD
CANDU OPERATIONS
LIBRARY
1155 RUE METCALFE
2ND FLOOR
MONTREAL QUEBEC CANADA

168305104222 1 1C01CY1FB11M1
AUBURN PUBLIC LIBRARY
BONI HATHAWAY
DIRECTOR
1118 15TH ST PO BOX 324
AUBURN NE 68305

107932079111 1 1C01CY1FB11M1
AUTOMATIC SWITCH CO
VALVE ENGINEERING DEPT
JOHN R SHANK
PRODUCT ENGINEERING MGR
HANOVER ROAD
FLORHAM PARK NJ 07932

1CANAD053197 1 1C01CY1FB11M1
B & W CANADA LTD
GALT ONTARIO CANADA

115001142322 1 1C01CY1FB11M1
B F JONES MEMORIAL LIBRARY
MARY ANN PAULIN
REFERENCE LIBRARIAN
663 FRANKLIN AVE
ALIQUIPPA PA 15001

124506103169 1 1C01CY1FB11M1
BABCOCK & WILCOX CO
NUCLEAR POWER DIV
TECH LIBRARY
PO BOX 10935
LYNCHBURG VA 24506

130076105888 1 1C01CY1FB11M1
ATLAN-TECH INC
ROBERT A HEARN JR
PRESIDENT
635 HEMBREE PARKWAY
ROSWELL GA 30076

108232108842 1 1C01CY1FB11M1
ATLANTIC CITY ELECTRIC CO
GOVERNMENT AFFAIRS
RICHARD M STOKES
MANAGER
1199 BLACK HORSE PIKE BOX 126
PLEASANTVILLE NJ 08232

123502056821 1 1C01CY1FB11M1
ATLANTIC NUCLEAR SERVICES INC
ALAN SONNER
PO BOX 12716
NORFOLK VA 23502

1TAIWA111039 1 1C01CY1FB11M1
ATOMIC ENERGY COUNCIL
ADMINISTRATOR
67 LANE 144 KEELUNG RD SEC 4
TAIPEI 10772 TAIWAN

1EGYPT066990 1 1C01CY1FB11M1
ATOMIC ENERGY ESTABLISHMENT
F H HAMMAD
ADMINISTRATOR
101 KASR ELEINY ST
CAIRO EGYPT

1INDIA038061 1 1C01CY1FB11M1
ATOMIC ENERGY REGULATORY BD
LIGHT WATER REACTOR DIVISION
K NANJUNDESWARAN
DIRECTOR
CSM MARG
BOMBAY-400 039 INDIA

178768141536 1 1C01CY1FB11M1
AUSTIN PUBLIC LIBRARY
AUSTIN HISTORY CENTER
TIM WILDER
LIBRARY AIDE
P O BOX 2287
AUSTIN TX 78768

107932091387 1 1C01CY1FB11M1
AUTOMATIC SWITCH CO
D B TOMPSEN
DIRECTOR Q A
50-56 HANOVER RD
FLORHAM PARK NJ 07932

115001103005 1 1C01CY1FB11M1
B F JONES MEMORIAL LIBRARY
MARY ANN PAULIN
REFERENCE DEPT
663 FRANKLIN AVE
ALIQUIPPA PA 15001

162249052949 1 1C01CY1FB11M1
B LINE SYSTEMS INC
RICH CAIN
Q A MANAGER
509 WEST MONROE STREET
HIGHLAND IL 62249

120852137707 1 1C01CY1FB11M1
BABCOCK & WILCOX CO
NUCLEAR POWER DIVISION
ROBERT B BORSUM
1700 ROCKVILLE PIKE
SUITE 525
ROCKVILLE MD 20852

120852140105 1 1C01CY1FB11M1
BABCOCK & WILCOX CO
ROCKVILLE LICENSING SVCS
ROBERT B BORSUM
1700 ROCKVILLE PIKE
SUITE 525
ROCKVILLE MD 20852

124506103886 1 1C01CY1FB11M1
BABCOCK & WILCOX CO
QA
W T ENGELKE
MANAGER-QUALITY & SAFETY
PO BOX 10935 3315 OLD FOREST R
LYNCHBURG VA 24506

124506106530 1 1C01CY1FB11M1
BABCOCK & WILCOX CO
NUCLEAR POWER DIVISION
R R STEINKE
PO BOX 10935
OFR
LYNCHBURG VA 24506

144092079497 1 1C01CY1FB11M1
BAILEY CONTROLS CO
BABCOCK & WILCOX
A J KUKWA
29801 EUCLID AVE
3S1
WICKLIFFE OH 44092

121203081568 1 1C01CY1FB11M1
BALTIMORE GAS & ELECTRIC CO
SECURITY SERVICES
VAUGHN F BRADLEY
DIRECTOR
PO BOX 1475 WCB RBC
BALTIMORE MD 21203

120657140920 1 1C01CY1FB11M1
BALTIMORE GAS & ELECTRIC CO
NUCLEAR ENERGY
G C CREEL
VICE PRESIDENT
P.O. BOX 1535 MD RTS 2 & 4
LUSHY MD 20657

120657063178 1 1C01CY1FB11M1
BALTIMORE GAS & ELECTRIC CO
NUC ENG SERVICES
BRUCE MONTGOMERY
PRINCIPAL ENGINEER LICENSING
BOX 1535 CALVERT CLIFFS
LUSBY MD 20657

195060063660 1 1C01CY1FB11M1
BARON & ASSOCIATES INC
STEPHEN L BARON
207 MISSION STREET
SANTA CRUZ CA 95060

191749052940 1 1C01CY1FB11M1
BARTON INSTRUMENTS
UNIT OF ITT
G R WELT
QA DIRECTOR
900 SOUTH TURNBULL CANYON RD
CITY OF INDUSTRY CA 91749

143201139916 1 1C01CY1FB11M1
BATTELLE COLUMBUS DIV
COLUMBUS DIV
CRAIG E JENSEN
RADIOLOGICAL SAFETY OFFICER
505 KING AVENUE
COLUMBUS OH 43201

199352140317 1 1C01CY1FB11M1
BATTELLE PACIFIC NORTHWEST LAB
LICENSING SECTION
ROBERT L GRUEL
OPERATOR
K6-46
RICHLAND WA 99352

124506141604 1 1C01CY1FB11M1
BABCOCK & WILCOX CO
NAVAL NUCLEAR FUEL DIV
CHARLIE C BOYD
PO BOX 11165
LRC
LYNCHBURG VA 24506

124505140590 1 1C01CY1FB11M1
BABCOCK & WILCOX CO
NNFD
ARNE F OLSEN
PO BOX 785
42
LYNCHBURG VA 24505

124506139153 1 1C01CY1FB11M1
BABCOCK & WILCOX CO
NUCLEAR POWER DIV
J H TAYLOR
MGR LICENSING
PO BOX 10935
LYNCHBURG VA 24506

178758141779 1 1C01CY1FB11M1
BALCONES RESEARCH CTR
NUC ENGR TECH LAB
THOMAS BAUER
SUPERVISOR
10100 BURNET ROAD
AUSTIN TX 78758

121203081567 1 1C01CY1FB11M1
BALTIMORE GAS & ELECTRIC CO
GENERAL SERVICES
HERBERT D COSS, JR
VICE PRESIDENT
PO BOX 1475
BALTIMORE MD 21203

120657006431 1 1C01CY1FB11M1
BALTIMORE GAS & ELECTRIC CO
CALV CLIFFS NUC PWR PLT
R P HEIBEL
GENERAL SUPERVISOR-QUALITY
LUSBY MD 20657

121203081369 1 1C01CY1FB11M1
BALTIMORE GAS & ELECTRIC CO
JOHN W ROSS JR
SECURITY PLANNING SPECIALIST
BOX 1475-(74)WINDSOR OFC BLDG
BALTIMORE MD 21203

128213138730 1 1C01CY1FB11M1
BARTECH INC
JOHN H JOHNSON
BRANCH MGR
8303 UNIVERSITY EXECUTIVE PARK
SUITE 460
CHARLOTTE NC 28213

143201102094 1 1C01CY1FB11M1
BATTELLE
NUCLEAR SERVICES GROUP
CLARENCE WILLIAMS JR
QUALITY MGR
505 KING AVE
COLUMBUS OH 43201

199352006329 1 1C01CY1FB11M1
BATTELLE PACIFIC NORTHWEST LAB
SPENCER H BUSH
CONSULTANT
BOX 999
RICHLAND WA 99352

119464110883 1 1C01CY1FB11M1
BECHTEL CORP
R E JAGELS
OFFICE MANAGER
1610 MEDICAL DRIVE
POTTSTOWN PA 19464

177252006455 1 1C01CY1FB11M1
BECHTEL INC
BI OFFICE SERVICES
C W TERRY
PO BOX 2166
1W215
HOUSTON TX 77252

137830094196 1 1C01CY1FB11M1
BECHTEL NATIONAL INC
VAL BOUCHARD
PO BOX 350
OAKRIDGE TN 37830

120877026694 1 1C01CY1FB11M1
BECHTEL POWER CORP
NANCY G CHAPMAN
SERCH COORDINATOR
15740 SHADY GROVE RD
GAITHERSBURG MD 20877

148106052944 1 1C01CY1FB11M1
BECHTEL POWER CORP
ROGER H HEYN
PROJECT MANAGER
POST OFFICE BOX 1000
ANN ARBOR MI 48106

120877006748 1 1C01CY1FB11M1
BECHTEL POWER CORP
QA DEPT
D C KANSAL
15740 SHADY GROVE ROAD
1A1
GAITHERSBURG MD 20877

190650091921 1 1C01CY1FB11M1
BECHTEL POWER CORP
WESTERN POWER DIVISION
DEE MORRIS
CHIEF LIBRARIAN
12440 E IMPERIAL HWY
NORWALK CA 90650

190638137264 1 1C01CY1FB11M1
BECHTEL POWER CORP
DOCUMENT PROCESSING
JOYCE PRICE
RECORDS MANAGER
17000 VALLEY VIEW
LA MIRADA CA 90638

194119091394 1 1C01CY1FB11M1
BECHTEL POWER CORP
J B VIOLETTE
PROJECT MANAGER
PO BOX 3965
SAN FRANCISCO CA 94119

1INDIA003464 1 1C01CY1FB11M1
BHABHA ATOMIC RESEARCH CENTRE
LIBRARY & INFO SERVICES
M K KELKAR
SCIENTIFIC OFFICER
TROMBAY
BOMBAY 400 085 INDIA

120005138137 1 1C01CY1FB11M1
BISHOP LIBERMAN COOK ET AL
LIBRARIAN
1400 L ST NW
SUITE 800
WASHINGTON DC 20005

164114091400 1 1C01CY1FB11M1
BLACK & VEATCH
R E BLAISDELL
QA MANAGER
PO BOX 8405
KANSAS CITY MO 64114

194119066973 1 1C01CY1FB11M1
BECHTEL NATIONAL INC
B N I LIBRARY
PO BOX 3965
45/10/A1
SAN FRANCISCO CA 94119

137831103913 1 1C01CY1FB11M1
BECHTEL NATIONAL INC
M L BUCHAN
800 OAK RIDGE TNPK
PO BOX 350
OAK RIDGE TN 37831

194119006104 1 1C01CY1FB11M1
BECHTEL POWER CORP
S F POWER DIVISION
ROBERT W HENDERSON
PO BOX 3965
45/4/D41
SAN FRANCISCO CA 94119

120877064676 1 1C01CY1FB11M1
BECHTEL POWER CORP
R HICKMAN
SUPERVISOR REC MGMT
15740 SHADY GROVE ROAD
GAITHERSBURG MD 20877

148106109359 1 1C01CY1FB11M1
BECHTEL POWER CORP
ANN ARBOR OFFICE
JERRY R MCBRIDE
QA MANAGER
PO BOX 1000
ANN ARBOR MI 48106

160606140122 1 1C01CY1FB11M1
BECHTEL POWER CORP
JOHN S PREBULA
300 SOUTH RIVERSIDE PLAZA
STE 688N
CHICAGO IL 60606

190650137184 1 1C01CY1FB11M1
BECHTEL POWER CORP
WESTERN-NORWALK
JOHN J VELLA
12440 E IMPERIAL HWY
F2
NORWALK CA 90650

135650139122 1 1C01CY1FB11M1
BERGEN PATERSON PIPESUPPORT CO
MICHAEL ZILLS
QA MANAGER
PO BOX 426
MOULTON AL 35650

120005138656 1 1C01CY1FB11M1
BISHOP COOK PURCELL & REYNOLDS
NICHOLAS S REYNOLDS
1400 L STREET NW
WASHINGTON DC 20005

164114079072 1 1C01CY1FB11M1
BLACK & VEATCH
CENTRAL LIBRARY
PO BOX 8405
KANSAS CITY MO 64114

1WGERM005318 1 1C01CY1FB11M1
BMFT
REACTOR SAFETY RESEARCH
ADMINISTRATOR
POSTFACH 200706
5300 BONN 2 WGERMANY

1WGERM011714 1 1C01CY1FB11M1
BMU
DIV RS 1 3
HANS C BREEST
ADMINISTRATOR
POSTFACH 120629
D-5300 BONN 1 WGERMANY

195501091019 1 1C01CY1FB11M1
BOARD OF SUPERVISORS
CHAIRMAN
825 5TH ST
EUREKA CA 95501

119468094184 1 1C01CY1FB11M1
BOARD OF SUPV LIMERICK TWNSHP
CHAIRMAN
646 WEST RIDGE PIKE
LIMERICK PA 19468

102360109237 1 1C01CY1FB11M1
BOSTON EDISON CO
PLANT DEPT
ROY A ANDERSON
ROCKY HILL ROAD
MS-39
PLYMOUTH MA 02360

102360140913 1 1C01CY1FB11M1
BOSTON EDISON CO
PILGRIM NUCL POWR STAT
RALPH G BIRD
SENIOR VICE PRESIDENT NUCLEAR
ROCKY HILL RD
PLYMOUTH MA 02360

102360140113 1 1C01CY1FB11M1
BOSTON EDISON CO
SYSTEMS ENGINEERING DIV
WILLIAM S CLANCY
MANAGER
RFD #1, ROCKY HILL RD
PLYMOUTH MA 02360

102115106662 1 1C01CY1FB11M1
BOSTON EDISON CO
OFC TECH & PROFES WKRS UNION
JOSEPH C FAHERTY
161 MASSACHUSETTS AVE
RM 310
BOSTON MA 02115

102184103184 1 1C01CY1FB11M1
BOSTON EDISON CO
BONNIE A GORDON
NUCLEAR RECORDS SPECIALIST
25 BRAINTREE HILL OFFICE PARK
BRAINTREE MA 02184

102184029316 1 1C01CY1FB11M1
BOSTON EDISON CO
NUCLEAR
JAMES D KEYES
REG AFFAIRS & PROG GROUP LDR
25 BRAINTREE HILL PARK
BRAINTREE MA 02184

102184140112 1 1C01CY1FB11M1
BOSTON EDISON CO
NUCLEAR ENGINEERING DEPT
RICHARD N SWANSON
MANAGER
25 BRAINTREE HILL PARK
BRAINTREE MA 02184

101888103359 1 1C01CY1FB11M1
BP TECHNICAL SERVICES
G M QUINN
GENERAL MANAGER
PO BOX 4011
WOBURN MA 01888

106226091411 1 1C01CY1FB11M1
BRAND REX CO
LOUIS B ROBERTS
VICE PRES QUALITY ASSURANCE
1600 MAIN ST
WILLIAMANTIC CT 06226

111973106139 1 1C01CY1FB11M1
BROOKHAVEN NATIONAL LABORATORY
DEPT OF NUCLEAR ENERGY
NUCLEAR SAFETY LIBRARY
BLDG 130
UPTON NY 11973

111973066851 1 1C01CY1FB11M1
BROOKHAVEN NATIONAL LABORATORY
REACTOR DIVISION
W J BRYNDA
UPTON
BLDG 703
LONG ISLAND NY 11973

111973030913 1 1C01CY1FB11M1
BROOKHAVEN NATIONAL LABORATORY
SEP
LEONARD C EMMA
ASSOCIATE DIVISION HEAD
BLDG 535A
UPTON NY 11973

111973136005 1 1C01CY1FB11M1
BROOKHAVEN NATIONAL LABORATORY
LANCE JUNKER
HFBR PLANT MANAGER
BLDG 750
UPTON NY 11973

105301104218 1 1C01CY1FB11M1
BROOKS MEMORIAL LIBRARY
JERRY CARBORE
ASSISTANT LIBRARIAN
224 MAIN ST
BRATTLEBORO VT 05301

177001064710 1 1C01CY1FB11M1
BROWN & ROOT INC
RECORDS MANAGEMENT
W A HEATH JR
MANAGER
PO BOX 3 BLDG 01 BSMT
HOUSTON TX 77001

1WGERM053329 1 1C01CY1FB11M1
BROWN BOVERI REAKTOR GMBH
ABT TPE 14
FACHBUCHEREI
DUDENSTR 44
6800 MANNHEIM 1 WGERMANY

184116137477 1 1C01CY1FB11M1
BUREAU OF RADIATION CONTROL
LARRY ANDERSON
DIRECTOR
PO BOX 16690
SALT LAKE CITY UT 84116

189158139708 1 1C01CY1FB11M1
BUREAU OF REGULATORY HLTH SVCS
DEPT OF HUMAN RESOURCES
MARY THOMPSON
RADIATION CONTROL SPECIALIST
620 BELROSE ST
LAS VEGAS NV 89158

130830104241 1 1C01CY1FB11M1
BURKE COUNTY LIBRARY
GWEN JACKSON
LIBRARY ASST
412 4TH ST
WAYNESBORO GA 30830

106856057905 1 1C01CY1FB11M1
BURNDY CORP
POWER
M R MONASHKIN
CONN AND RICHARDS AVE
203
NORWALK CT 06856

107649103175 1 1C01CY1FB11M1
BURNS & ROE INC
F J PATTI
CHIEF NUCLEAR ENGINEER
800 KINDERKAMACK RD
ORADELL NJ 07649

190058052965 1 1C01CY1FB11M1
BW/IP INTERNATIONAL INC
PUMP DIVISION
R D HAM
2300 E VERNON AVE
06
LOS ANGELES CA 90058

119462091424 1 1C01CY1FB11M1
C & D POWER SYSTEMS INC
GRAHAM WALKER
MGR APPLICATIONS ENGINEERING
3043 WALTON RD
PLYMOUTH MEETING PA 19462

160559064455 1 1C01CY1FB11M1
C & S VALVE COMP
TRICENTRIC DIV
M L SESHAGIRI
Q A MANAGER
40 CHESTNUT AVE
WESTMONT IL 60559

193407142332 1 1C01CY1FB11M1
CA POLYTECHNIC STATE UNIV
ROBERT E KENNEDY LIBRARY
CHI SU KIM
HEAD
GOVT DOCUMENTS & MAPS DEPT
SAN LUIS OBISPO CA 93407

195814091833 1 1C01CY1FB11M1
CALIFORNIA ENERGY COMMISSION
CHARLES R IMBRECHT
CHAIRMAN
1516 NINTH ST
SACRAMENTO CA 95814

165251102993 1 1C01CY1FB11M1
CALLAWAY COUNTY PUBLIC LIBRARY
LADONNA H JUSTICE
ADMINISTRATIVE LIBRARIAN
710 COURT STREET
FULTON MO 65251

177251080108 1 1C01CY1FB11M1
CAMERON FORGE CO
EXTRUDED PRODUCTS DIV
KEN JURICA
SALES MANAGER
PO BOX 1212
HOUSTON TX 77251

185282137218 1 1C01CY1FB11M1
CAMILLE BAUER INC
TOBAR
ANGELA DE QUINA
Q C ENGINEER
1441 W ALAMEDA DR
TEMPE AZ 85282

127562080545 1 1C01CY1FB11M1
CAROLINA POWER & LIGHT CO
HARRIS 1 NPS
PLANT MANAGER
NEW HILL NC 27562

107649108081 1 1C01CY1FB11M1
BURNS & ROE INC
TOM DIFRANSICO
800 KINDERKAMACK RD
ORADELL NJ 07649

107645038055 1 1C01CY1FB11M1
BUTLER SERVICE GROUP INC
FRANK J CIAMPI
VICE PRESIDENT-HUMAN RESOURCES
110 SUMMIT AVE
PO BOX 460
MONTVALE NJ 07645

161010142335 1 1C01CY1FB11M1
BYRON PUBLIC LIBRARY DISTRICT
PENNY A O'ROURKE
LIBRARIAN
109 N FRANKLIN - PO BOX 434
BYRON IL 61010

113126094460 1 1C01CY1FB11M1
C & G VIDEO SYSTEMS INC
DBA/BISESI STUDIO- PHOTOGRAPHY
223 W 6TH ST
OSWEGO NY 13126

106450020109 1 1C01CY1FB11M1
C N FLAGG CO
GLENN R LACEY
MANAGER-QUALITY ASSURANCE
450 MURDOCK AVENUE
MERIDEN CT 06450

146952105904 1 1C01CY1FB11M1
CABLEC INDUSTRIAL CABLE CO
TING H LING
TECHNICAL CONSULTANT
E 8TH ST PO BOX 188
MARION IN 46952

195814103152 1 1C01CY1FB11M1
CALIFORNIA RADIO MATLS MGMT
ALAN D PASTERNAK
455 CAPITOL MALL
SUITE 380
SACRAMENTO CA 95814

120678104226 1 1C01CY1FB11M1
CALVERT COUNTY LIBRARY
PAT HOFMANN
REFERENCE LIBRARIAN
DUKE ST P O BOX 405
PRINCE FREDERICK MD 20678

127605142087 1 1C01CY1FB11M1
CAMERON VILLAGE REGIONAL LIB
JANET VIRNELSON
1930 CLARK AVE
RALEIGH NC 27605

143162139170 1 1C01CY1FB11M1
CAPITOL MFG CO
DIV OF HARSCO CORP
MARK A SHARROW
QUALITY CONTROL MGR
1501 WEST MAIN ST
WEST JEFFERSON OH 43162

129550080516 1 1C01CY1FB11M1
CAROLINA POWER & LIGHT CO
ROBINSON 2 NPS
PLANT MANAGER
HARTSVILLE SC 29550

127602005449 1 1C01CY1FB11M1
CAROLINA POWER & LIGHT CO
POWER SUPPLY
LYNN W EURY
EXECUTIVE VICE PRESIDENT
PO BOX 1551
RALEIGH NC 27602

127602109508 1 1C01CY1FB11M1
CAROLINA POWER & LIGHT CO
D E HOLLAR
ASSOCIATE GENERAL COUNSEL
PO BOX 1551
1381
RALEIGH NC 27602

128461030566 1 1C01CY1FB11M1
CAROLINA POWER & LIGHT CO
BRUNSWICK STEAM ELECTRIC PLANT
N V STEWART
P O BOX 10429
SOUTHPORT NC 28461

160914110587 1 1C01CY1FB11M1
CBI SERVICES INC
BUSINESS DEVELOPEMENT
RICHARD M CONWAY
MANAGER
ST GEORGE RD
BOURBONNAIS IL 60914

152401104227 1 1C01CY1FB11M1
CEDAR RAPIDS PUBLIC LIBRARY
ROGER A RAYBORN
INFORMATION SPECIALIST
500 1ST ST SE
CEDAR RAPIDS IA 52401

1SPAIN108939 1 1C01CY1FB11M1
CENTRAL NUCLEAR DE ALMARAZ
CLAUDIO COELLO
123
MADRID 28006 SPAIN

1FRANC003524 1 1C01CY1FB11M1
CENTRE D'ETUDES NUCLEAIRES
MARIE BENEDITTINI
BP NO. 48 F-92263
FONTENAY AUX ROSES FRANCE

125304063988 1 1C01CY1FB11M1
CHARLESTON AREA MEDICAL CENTER
MEMORIAL DIV
RIDGELY CONANT
DIRECTOR OF NUC MEDICINE
3200 MACCORKLE AVE SE
CHARLESTON WV 25304

129212091433 1 1C01CY1FB11M1
CHEM NUCLEAR SYSTEMS INC
PO BOX 726
BARNSWELL SC 29212

160632138687 1 1C01CY1FB11M1
CHICAGO TUBE & IRON CO
QUALITY ASSURANCE
MANAGER
2531 WEST 48TH ST
CHICAGO IL 60632

163136140058 1 1C01CY1FB11M1
CHRISTIAN HOSPITAL NE
ROBERT TUREO PHD
RADIATION SAFETY OFFICER
11133 DUNN RD
ST LOUIS MO 63136

128461080961 1 1C01CY1FB11M1
CAROLINA POWER & LIGHT CO
BRUNSWICK STEAM ELEC PLANT
JOSEPH L HARNESS
PLANT MANAGER
PO BOX 10429
SOUTHPORT NC 28461

129550080894 1 1C01CY1FB11M1
CAROLINA POWER & LIGHT CO
ROBINSON 2 NPS
R E MORGAN
GENERAL MANAGER
PO BOX 790
HARTSVILLE SC 29550

177241139103 1 1C01CY1FB11M1
CBI
RALPH E KELLEY
DIRECTOR CQA
PO BOX 41146
HOUSTON TX 77241

135550137315 1 1C01CY1FB11M1
CBI SERVICES INC
H K HOWERTON
Q A MANAGER
P O BOX 10
CORDOVA AL 35550

1ENGLA032235 1 1C01CY1FB11M1
CENTRAL ELECTRIC GEN BOARD
CENTRAL LIBRARY
G G TERRY
CHIEF LIBRARIAN
18 WARWICK LANE COURTENAY HSE
LONDON EC4P 4EB ENGLAND

1BELGI057562 1 1C01CY1FB11M1
CENTRE D'ETUDE DE L'ENER NUCL
REACTOR DIVISION
FRANCOIS MOTTE
ADMINISTRATOR
BOERETANG 200
B-2400 MOL BELGIUM

189119141279 1 1C01CY1FB11M1
CER CORP
ELLA JACKSON
LIBRARIAN
950 GRIER DR
LAS VEGAS NV 89119

137402103010 1 1C01CY1FB11M1
CHATTANOOGA PUBLIC LIBRARY
BUSINESS SCIENCE & TECH DEPT
PATRICIA MARONEY
HEAD
1001 BROAD ST
CHATTANOOGA TN 37402

129210074270 1 1C01CY1FB11M1
CHEM NUCLEAR SYSTEMS INC
DOCUMENT CONTROL
220 STONERIDGE DR
COLUMBIA SC 29210

198365129269 1 1C01CY1FB11M1
CHOCKIE CONSULTING SERVICES
LAWRENCE J CHOCKIE
221 CONDON LANE
PORT LUDLOW WA 98365

120006082274 1 1C01CY1FB11M1
CHUPU ELECTRIC POWER CO INC
YOSHIHIRO NOGUCHI
REPRESENTATIVE
900 17TH ST NW
SUITE 714
WASHINGTON DC 20006

110987107666 1 1C01CY1FB11M1
CINTICHEM INC
STERLING FOREST RES CTR
JAMES J MCGOVERN
PLANT MANAGER
P O BOX 816
TUXEDO NY 10987

144081080499 1 1C01CY1FB11M1
CLEVELAND ELEC ILLUMINATING CO
PERRY 1 NPS
GENERAL MANAGER
PO BOX 97
PERRY OH 44081

144101139806 1 1C01CY1FB11M1
CLEVELAND ELEC ILLUMINATING CO
DAVID E BURKE
ESQUIRE
PO BOX 5000
CLEVELAND OH 44101

144081104155 1 1C01CY1FB11M1
CLEVELAND ELEC ILLUMINATING CO
PERRY NUCLEAR POWER PLANT
W W MILES
PO BOX 97
E130
PERRY OH 44081

144081082142 1 1C01CY1FB11M1
CLEVELAND ELEC ILLUMINATING CO
PERRY NPS
J WALDRON
PRINCIPAL ENGINEER
10 CENTER RD
PERRY OH 44081

1BRAZI008064 1 1C01CY1FB11M1
CNEN
INTERNATIONAL AFFAIRS OFFICE
PAULO D PEREIRA
ADMINISTRATOR
RUA GENERAL SEVERIANO 90
RIO DE JANEIRO 22294 BRAZIL

192128139959 1 1C01CY1FB11M1
COLANDREA & ASSOCIATES INC
T R COLANDREA
PO BOX 27121
SAN DIEGO CA 92128

106095038343 1 1C01CY1FB11M1
COMBUSTION ENGINEERING INC
LIBRARY 756-405
LIBRARIAN
1000 PROSPECT HILL RD
6435-405
WINDSOR CT 06095

120852139719 1 1C01CY1FB11M1
COMBUSTION ENGINEERING INC
C-E POWER SYSTEMS
CHARLES B BRINKMAN
12300 TWINBROOK PKWY
SUITE 330
ROCKVILLE MD 20852

106095138690 1 1C01CY1FB11M1
COMBUSTION ENGINEERING INC
T COLLIER
1000 PROSPECT HILL RD
9331-400
WINDSOR CT 06095

106095108936 1 1C01CY1FB11M1
COMBUSTION ENGINEERING INC
POWER SYSTEMS BUSINESS
RONALD J FITZGERALD
1000 PROSPECT HILL RD
9370-9ABB
WINDSOR CT 06095

119107111239 1 1C01CY1FB11M1
CLEAN AIR COUNCIL
RADIATION
PROGRAM DIRECTOR
311 S JUNIPER ST
ROOM 603
PHILADELPHIA PA 19107

144081093937 1 1C01CY1FB11M1
CLEVELAND ELEC ILLUMINATING CO
NQAD
A L BRADSHAW
PO BOX 84
TS-17
PERRY OH 44081

144081139805 1 1C01CY1FB11M1
CLEVELAND ELEC ILLUMINATING CO
PERRY PLANT
A KAPLAN
VICE PRESIDENT-NUCLEAR GROUP
10 CENTER ROAD
N PERRY OH 44081

144081141846 1 1C01CY1FB11M1
CLEVELAND ELEC ILLUMINATING CO
PERRY NUCLEAR POWER PLANT
R A NEWKIRK
P.O. OX 97
M/S E210
PERRY OH 44081

119020093323 1 1C01CY1FB11M1
CMS GILBRETH PACKAGING
DISSOLVO
FRANK RABLE
3300 STATE RD
PO BOX 779
BENSALEM PA 19020

132629104223 1 1C01CY1FB11M1
COASTAL REGION LIBRARY
JULIE DEBUSK
LIBRARIAN
8619 W CRYSTAL ST
CRYSTAL RIVER FL 32629

180220004291 1 1C01CY1FB11M1
COLORADO DEPT OF HEALTH
RADIATION CONTROL DIV
ALBERT J HAZLE
DIRECTOR
4210 EAST 11TH AVE
DENVER CO 80220

106095100717 1 1C01CY1FB11M1
COMBUSTION ENGINEERING INC
DEPT 9426-DH24
T S BERNARD
ENGR SUPV
1000 PROSPECT HILL RD
WINDSOR CT 06095

106095103016 1 1C01CY1FB11M1
COMBUSTION ENGINEERING INC
9341-9BB
LYNN M CALDON
1000 PROSPECT HILL RD
WINDSOR CT 06095

120852142061 1 1C01CY1FB11M1
COMBUSTION ENGINEERING INC
CLIENT SERVICES
J J CONNOLLY
12300 TWINBROOK PKWY
SUITE 330
ROCKVILLE MD 20852

106095100722 1 1C01CY1FB11M1
COMBUSTION ENGINEERING INC
NON METALLIC MATLS ENGR
J S GLAZMAN
1000 PROSPECT HILL RD
9351-510
WINDSOR CT 06095

106095103680 1 1C01CY1FB11M1
COMBUSTION ENGINEERING INC
QUALITY ASSURANCE
MORTIMER M GLOTZER
1000 PROSPECT HILL RD
5372-1701
WINDSOR CT 06095

106095100726 1 1C01CY1FB11M1
COMBUSTION ENGINEERING INC
DEPT 9493-2322
J C MOULTON
1000 PROSPECT HILL RD
PO BOX 500
WINDSOR CT 06095

106095091445 1 1C01CY1FB11M1
COMBUSTION ENGINEERING INC
C-E POWER SYSTEMS
JOHN P PASQUENZA
1000 PROSPECT HILL DR
9370-9BB
WINDSOR CT 06095

106095026584 1 1C01CY1FB11M1
COMBUSTION ENGINEERING INC
C-E POWER SYSTEMS
A E SCHERER
1000 PROSPECT HILL RD BOX 500
9320-407
WINDSOR CT 06095

106095091444 1 1C01CY1FB11M1
COMBUSTION ENGINEERING INC
NUCLEAR POWER BUSINESS
THOMAS SWIFT
1000 PROSPECT HILL DR
9370-9ABB
WINDSOR CT 06095

1FRANC006953 1 1C01CY1FB11M1
COMITE INTERMINISTERIEL DE
LA SECURITE NUCLEAIRE
BERNARD AUGUSTIN
ADMINISTRATOR
54 RUE DE VARENNE
75700 PARIS FRANCE

160407080565 1 1C01CY1FB11M1
COMMONWEALTH EDISON CO
BRAIDWOOD 1 NPS
PLANT MANAGER
BRACEVILLE IL 60407

160450080547 1 1C01CY1FB11M1
COMMONWEALTH EDISON CO
DRESDEN NPS
STATION MGR
RR 1
MORRIS IL 60450

160099080577 1 1C01CY1FB11M1
COMMONWEALTH EDISON CO
ZION 1 NPS
PLANT MANAGER
ZION IL 60099

160450141955 1 1C01CY1FB11M1
COMMONWEALTH EDISON CO
DRESDEN
JAMES COONAN
RR 1
MORRIS IL 60450

160099105122 1 1C01CY1FB11M1
COMMONWEALTH EDISON CO
ZION GENERATION STATION
T P JOYCE
STATION MANAGER
101 SHILOH BLVD
ZION IL 60099

137402093936 1 1C01CY1FB11M1
COMBUSTION ENGINEERING INC
NUCLEAR COMPONENTS
W J HEILKER
ANALYTICAL ENGINEERING
911 WEST MAIN ST
CHATTANOOGA TN 37402

106095100718 1 1C01CY1FB11M1
COMBUSTION ENGINEERING INC
DEPT 9332-0407
VIRGIL A PAGGEN
1000 PROSPECT HILL RD
WINDSOR CT 06095

103801091446 1 1C01CY1FB11M1
COMBUSTION ENGINEERING INC
C-E NEWINGTON
W R POTEET
MANAGER-QA
OLD DOVER RD
NEWINGTON NH 03801

106095141964 1 1C01CY1FB11M1
COMBUSTION ENGINEERING INC
NUCLEAR LICENSING
E A SCHERER
DIRECTOR
1000 PROSPECT HILL RD
WINDSOR CT 06095

1MEXIC064504 1 1C01CY1FB11M1
COMISION NACIONAL SEGURIDAD
NUCLEAR Y SALVAGUARDIAS
INSURGENTES SUR NO 1806
MEXICO DF 01030 MEXICO

146052091449 1 1C01CY1FB11M1
COMMERCIAL FILTERS
PARKER HANIFFIN
JOHN STEWART
QUALITY ASSURANCE MGR
PO BOX 1300
LEBANON IN 46052

161010080560 1 1C01CY1FB11M1
COMMONWEALTH EDISON CO
BYRON 1 NPS
PLANT MANAGER
4450 NORTH GERMAN CHURCH RD
BYRON IL 61010

161341080412 1 1C01CY1FB11M1
COMMONWEALTH EDISON CO
LASALLE COUNTY STATION
STATION MGR
RR1 BOX 220
MARSEILLES IL 61341

161242139829 1 1C01CY1FB11M1
COMMONWEALTH EDISON CO
QUAD CITIES NUC POWER STATION
R L BAX
STATION MANAGER
22710 206TH AVE NORTH
CORDOVA IL 61242

161341081556 1 1C01CY1FB11M1
COMMONWEALTH EDISON CO
LA SALLE COUNTY STATION
DIEDERICH
STATION MANAGER
RR 1 PO BOX 220
MARSEILLES IL 61341

160515142336 1 1C01CY1FB11M1
COMMONWEALTH EDISON CO
DIV 1530E
THOMAS J KOVACH
1400 OPUS PLACE
STE 300
DOWNERS GROVE IL 60515

150515142329 1 1C01CY1FB11M1
COMMONWEALTH EDISON CO
NUCLEAR LICENSING DEPT
THOMAS J KOVACH
1400 OPUS PLACE
STE 300
DOWNERS GROVE IL 60515

161010052460 1 1C01CY1FB11M1
COMMONWEALTH EDISON CO
BYRON NUCLEAR POWER STA
R PLENIEWICZ
STATION MANAGER
4450 N GERMAN CHURCH RD
BYRON IL 61010

160407093776 1 1C01CY1FB11M1
COMMONWEALTH EDISON CO
ROBERT E QUERIO
STATION MANAGER
RR 1 PO BOX 84
BRACEVILLE IL 60407

160099064689 1 1C01CY1FB11M1
COMMONWEALTH EDISON CO
ZION GEN STATION
W STONE
REGULATORY ASSURANCE SUPVR
SHILOH BLVD & LAKE MICHIGAN
ZION IL 60099

194705066574 1 1C01CY1FB11M1
COMPUTECH ENGINEERING SVCS INC
LINDSAY R JONES
PRESIDENT
2855 TELEGRAPH AVE
SUITE 410
BERKELEY CA 94705

107036091451 1 1C01CY1FB11M1
COMSIP INC
CUSTOMLINE DIVISION
RAYMOND P PEDALINO
CUSTOMLINE QA MANAGER
1418 E LINDEN AVE
LINDEN NJ 07036

160010138701 1 1C01CY1FB11M1
CONAM INSPECTION
INSPECTION DIV
BOYD CREECH
33 W HIGGINS RD
SUITE 1000
SOUTH BARRINGTON IL 60010

114225091454 1 1C01CY1FB11M1
CONAX BUFFALO CORP
JAMES G SCHRAVEN
QA MANAGER
2300 WALDEN AVE
BUFFALO NY 14225

106101103829 1 1C01CY1FB11M1
CONNECTICUT YANKEE ATOM PWR CO
NUCLEAR ENGINEERING & OPER
WILLIAM B ELLIS
SENIOR VICE PRESIDENT
PO BOX 270
HARTFORD CT 06141

106424080546 1 1C01CY1FB11M1
CONNECTICUT YANKEE ATOM PWR CO
HADDAM NECK PLANT
DONALD B MILLER JR
PLANT MANAGER
PO BOX 127E - RFD 1
EAST HAMPTON CT 06424

1SPAIN008080 1 1C01CY1FB11M1
CONSEJO DE SEGURIDAD NUCLEAR
BIBLIOTECA CSN
JACOBO DIAZ DIAZ
ADMINISTRATOR
C/SOR ANGELA DE LA CRUZ 3
28020 MADRID SPAIN

160690093370 1 1C01CY1FB11M1
COMMONWEALTH EDISON CO
CORP SECURITY G O
PATRICK J LAIRD
DIRECTOR OF CORP SECURITY
P O BOX 767
CHICAGO IL 60690

160099079389 1 1C01CY1FB11M1
COMMONWEALTH EDISON CO
ZION GENERATING STATION
G J PLIML
STATION MANAGER T
101 SHILOH BLVD
ZION IL 60099

161010103288 1 1C01CY1FB11M1
COMMONWEALTH EDISON CO
GUNNER SORENSEN
SITE PROJECT SUPERINTENDENT
PO BOX 902
BYRON IL 61010

1BELGI063097 1 1C01CY1FB11M1
COMPRIMO BELGIE NV
G DE WILDE
GEN ENG MANAGER
NOORDERLAAN 139
2030 ANTWERPEN BELGIUM

190601091450 1 1C01CY1FB11M1
COMSIP INC
DELPHI SYSTEMS DIV
SID LOHMEYER
PRODUCT MANAGER
3030 RED HAT LA
WHITTIER CA 90601

115222057893 1 1C01CY1FB11M1
COMSTOCK ENGINEERING INC
QA QC DEPT
E C YOCKEY
CORP MGR QA QC SERVICES
912 FORT DUQUESNE BLVD
PITTSBURGH PA 15222

114225024720 1 1C01CY1FB11M1
CONAX BUFFALO CORP
NUCLEAR PRODUCTS DIVISION
W C FEDERICK
VICE PRESIDENT
2300 WALDEN AVE
BUFFALO NY 14225

106106067149 1 1C01CY1FB11M1
CONNECTICUT OFC POLICY & MGMT
ENERGY DIVISION
BRADFORD S CHASE
UNDERSECRETARY FOR ENERGY
80 WASHINGTON STREET
HARTFORD CT 06106

106424005751 1 1C01CY1FB11M1
CONNECTICUT YANKEE ATOM PWR CO
HADDAM NECK PLANT
D B MILLER JR
STATION SUPT.
P O BOX 127E
E HAMPTON CT 06424

120006057875 1 1C01CY1FB11M1
CONNER & WETTERHAHN
MARK J WETTERHAHN
1747 PENNSYLVANIA AVE NW
SUITE 1050
WASHINGTON DC 20006

106801091455 1 1C01CY1FB11M1
CONSOLIDATED CONTROLS CORP
FRANK BUTLER
COMM N QC ENGINEER
15 DURANT AVE
BETHEL CT 06801

110511079130 1 1C01CY1FB11M1
CONSOLIDATED EDISON CO OF NY
INDIAN POINT NPS
MICHAEL BLATT
TECHNICAL CONSULTANT, NUCL POW
BROADWAY & BLEAKLEY AVE
BUCHANAN NY 10511

110566137286 1 1C01CY1FB11M1
CONSOLIDATED EDISON CO OF NY
INDIAN POINT NPS
DENNIS J MILLER
SR RADIATION PROT INSTRUCTOR
LOCUST AVE & RTE 202AVES
PEEKSKILL NY 10566

149043080491 1 1C01CY1FB11M1
CONSUMERS POWER CO
PALISADES NPS
PLANT MANAGER
COVERT MI 49043

149201139814 1 1C01CY1FB11M1
CONSUMERS POWER CO
JUDD L BACON
212 WEST MICHIGAN AVE
JACKSON MI 49201

149201057077 1 1C01CY1FB11M1
CONSUMERS POWER CO
A J BIRKLE
1945 W PARNALL ROAD
JACKSON MI 49201

149201105346 1 1C01CY1FB11M1
CONSUMERS POWER CO
NUCLEAR OPERATIONS
DAVID P HOFFMAN
VICE PRESIDENT
212 W MICHIGAN AVE
JACKSON MI 49201

148640066519 1 1C01CY1FB11M1
CONSUMERS POWER CO
MIDLAND TRAINING CENTER
L A SCHMIEDEKNECHT
OPERATIONS SUPERVISORY INSTR
3249 E GORDONVILLE RD
MIDLAND MI 48640

155440091457 1 1C01CY1FB11M1
CONTROL DATA CORP
ENERGY MGMT
LYNDA G GOODWIN
PO BOX 0
PLY058
MINNEAPOLIS MN 55440

106108052979 1 1C01CY1FB11M1
CONTROMATICS
CHARLES B WESTON
QUALITY ASSURANCE MANAGER
222 ROBERTS ST
EAST HARTFORD CT 06108

116127138490 1 1C01CY1FB11M1
COOPER INDUSTRIES
QUALITY CONTROL
W H A LAMBERT
MANAGER
LINCOLN AVE
GROVE CITY PA 16127

177252103596 1 1C01CY1FB11M1
COOPER INDUSTRIES INC
FLOW CONTROL DIV
OTIS MCDANIEL
SUPERVISOR-QUALITY CONTROL
PO BOX 2117
HOUSTON TX 77252

110511139740 1 1C01CY1FB11M1
CONSOLIDATED EDISON CO OF NY
NUCLEAR POWER
STEPHEN B BRAM
VICE PRESIDENT
BROADWAY AND BLEAKLEY AVES
BUCHANAN NY 10511

135201138662 1 1C01CY1FB11M1
CONSOLIDATED POWER SUPPLY CO
E A GEORGE
PO BOX 2472
BIRMINGHAM AL 35201

149201005712 1 1C01CY1FB11M1
CONSUMERS POWER CO
LIBRARY SERVICES
CATHERINE A SMITH
1945 W PARNALL RD
P11-040
JACKSON MI 49201

149201139816 1 1C01CY1FB11M1
CONSUMERS POWER CO
KENNETH W BERRY
DIRECTOR NUCLEAR LICENSING
1945 W PARNALL RD
JACKSON MI 49201

149720081510 1 1C01CY1FB11M1
CONSUMERS POWER CO
BIG ROCK POINT NPS
THOMAS W ELWARD
PLANT MANAGER
10269 US 31 NORTH
CHARLEVOIX MI 49720

149201139815 1 1C01CY1FB11M1
CONSUMERS POWER CO
THOMAS A MCNISH
SECRETARY
212 WEST MICHIGAN AVE
JACKSON MI 49201

192688126628 1 1C01CY1FB11M1
CONTROL COMPONENTS INC
ROBERT E TOPPING
DIRECTOR QUALITY ASSURANCE
22591 AVENIDA EMPRESA
SANTA MARGARITA CA 92688

120809141414 1 1C01CY1FB11M1
CONTROL DATA CORP
NET CORP
R C KERN
PRESIDENT
9 BANNISTER CT
GAITHERSBURG MD 20809

116127052980 1 1C01CY1FB11M1
COOPER ENERGY SERVICES
C-B RECIPROCATING
M J HELMICH
TECH DIR ENGR
LINCOLN AVE
GROVE CITY PA 16127

177001130565 1 1C01CY1FB11M1
COOPER INDUSTRIES INC
FLOW CONTROL DIV
R V HOPKINS
MGR-INDUSTRY AFFAIRS
PO BOX 2117
HOUSTON TX 77001

143050052981 1 1C01CY1FB11M1
COOPER INDUSTRIES INC
COOPER ENERGY SERVICES
G W MIZER
TECH SERV AND QA MANAGER
NORTH SANDUSKY STREET
MT VERNON OH 43050

116423091461 1 1C01CY1FB11M1
COPES VULCAN
DALE MAYS
QC MANAGER
MARTIN & RICE AVE
LAKE CITY PA 16423

127709103840 1 1C01CY1FB11M1
CORPORATE CONSULTING & DEV CO
CARSON BLANTON
QA MANAGER
PO BOX 12728
RESEARCH TRIANGLE PK NC 27709

160441110273 1 1C01CY1FB11M1
CRANE-ALOYCO INC
GARRETT PETROVICH
QA MANAGER
719 N PARKWOOD
ROMEOVILLE IL 60441

102093052986 1 1C01CY1FB11M1
CROSBY VALVE & GAGE CO
W D GREENLAW
43 KENDRICK ST
WRENTHAM MA 02093

130117091443 1 1C01CY1FB11M1
CRUCIBLE MATERIALS CORP
TRENT TUBE DIVISION
JACK L WEHRLE
QA MANAGER
141 HAMMONDS ST
CARROLLTON GA 30117

194596137130 1 1C01CY1FB11M1
CYGNA ENERGY SERVICES
CES
JEAN BURNS
2121 N CALIFORNIA BLVD
SUITE 220
WALNUT CREEK CA 94596

103874091470 1 1C01CY1FB11M1
D G O'BRIEN INC
H P HILBERG
MGR, PRODUCT APPLICATIONS
ONE CHASE PARK, PO BOX 159
PO BOX 159
SEABROOK NH 03874

154632080467 1 1C01CY1FB11M1
DAIRYLAND POWER COOPERATIVE
LACROSSE NPS
JOHN PARKYN
PLANT MANAGER
PO BOX 275
GENOA WI 54632

122021106393 1 1C01CY1FB11M1
DARELL BEVIS ASSOCIATES INC
14640 FLINT LEE RD STE D
CHANTILLY VA 22021

119899003040 1 1C01CY1FB11M1
DELMARVA POWER & LIGHT CO
PRODUCTION SERVICES
JACK URBAN
GENERAL MANAGER
PO BOX 231 800 KING ST
WILMINGTON DE 19899

108625109493 1 1C01CY1FB11M1
DEPT OF ENVIRON PROTECTION
C DAGGETT
COMMISSIONER
PO BOX CN-402
TRENTON NJ 08625

116423052982 1 1C01CY1FB11M1
COPES VULCAN
C J QUIRK
ADV MANAGER
POST OFFICE BOX 577
LAKE CITY PA 16423

144077139804 1 1C01CY1FB11M1
COUNTY OF LAKE
DALE KONDAS
ASSISTANT PROSECUTING ATTORNEY
105 MAIN ST
PAINESVILLE OH 44077

102093091466 1 1C01CY1FB11M1
CROSBY VALVE & GAGE CO
JOSEPH GREENE
QA MANAGER
43 KENDRICK ST
WRENTHAM MA 02093

1FINLA064852 1 1C01CY1FB11M1
CRT FOR RAD & NUC SAF
DEPT OF NUCLEAR SAFETY
EUROLA TAPIO
ADMINISTRATOR
PO BOX 268
SF-00101 HELSINKI FINLAND

143537141828 1 1C01CY1FB11M1
CYGNA ENERGY SERVICES
ENGINEERING MECHANICS SECTION
MANAGER
1745 INDIAN WOOD CIRCLE #120
MAUMEE OH 43537

102210066214 1 1C01CY1FB11M1
CYGNA ENERGY SERVICES
BRUCE E HINKLEY
VICE PRESIDENT
286 CONGRESS ST
7TH FL
BOSTON MA 02210

103874052989 1 1C01CY1FB11M1
D G O'BRIEN INC
D G O'BRIEN
PRESIDENT
ONE CHASE PARK
SEABROOK NH 03874

154601105347 1 1C01CY1FB11M1
DAIRYLAND POWER COOPERATIVE
JAMES W TAYLOR
EXECUTIVE OFFICER
2615 EAST AVENUE SOUTH
LA CROSSE WI 54601

119903036537 1 1C01CY1FB11M1
DELAWARE DEPT OF NATL RESOURCE
WATER RESOURCE
HARRY OTTO
TECHNICAL SERVICES SECTION
89 KINGS HWY PO BOX 1401
DOVER DE 19903

136628111240 1 1C01CY1FB11M1
DEPT OF ARMY
SAMEM - D
FULLER/ PAGE
EMERGENCY MANAGER
PO BOX 2288- MOBILE DISTRICT
MOBILE AL 36628

195814012056 1 1C01CY1FB11M1
DEPT OF HEALTH SERVICES
ENVIRONMENTAL MGMT BRANCH
ED BAILY
714 P ST-OFFICE BUILDING #8
ROOM 616
SACRAMENTO CA 95814

140621093738 1 1C01CY1FB11M1
DEPT OF HEALTH SERVICES
RADIATION CONTROL BRANCH
DONALD R HUGHES
MANAGER
275 E MAIN ST
FRANKFORT KY 40621

102111142233 1 1C01CY1FB11M1
DEPT OF PUBLIC HEALTH
ROBERT M HALLISEY
150 TRENTON ST
BOSTON MA 02111

148166080532 1 1C01CY1FB11M1
DETROIT EDISON CO
ENRICO FERMI 2 NPS
PLANT MANAGER
6400 NORTH DIXIE HIGHWAY
NEWPORT MI 48166

148166101364 1 1C01CY1FB11M1
DETROIT EDISON CO
NOC INFORMATION CENTER
116 EF2 NOC
160EF2 NOC
NEWPORT MI 48166

148166101365 1 1C01CY1FB11M1
DETROIT EDISON CO
PRODUCTION INFO CENTER
6400 N DIXIE HWY
104EF2 OSB
NEWPORT MI 48166

148166081083 1 1C01CY1FB11M1
DETROIT EDISON CO
NUCLEAR OPERATIONS TRAINING
LARRY BAUMGART
6400 N DIXIE HWY
224 NOC
NEWPORT MI 48166

148166103679 1 1C01CY1FB11M1
DETROIT EDISON CO
NUCLEAR SERVICES
HANS EBNER
6400 N DIXIE HWY
130 NOC
NEWPORT MI 48166

148166140059 1 1C01CY1FB11M1
DETROIT EDISON CO
LYNNE GOODMAN
DIRECTOR OF NUCLEAR LICENSING
6400 N DIXIE HWY
342EF2NOC
NEWPORT MI 48166

148166138782 1 1C01CY1FB11M1
DETROIT EDISON CO
LICENSING
LYNNE GOODMAN
DIRECTOR
6400 N DIXIE HWY
NEWPORT MI 48166

148166103375 1 1C01CY1FB11M1
DETROIT EDISON CO
FERMI 2
WILLIAM V LIPTON
6400 N DIXIE HWY
250A1B
NEWPORT MI 48166

148166140060 1 1C01CY1FB11M1
DETROIT EDISON CO
B. RALPH SYLVIA
SENIOR VICE PRESIDENT
6400 N DIXIE HWY
NEWPORT MI 48166

147716110073 1 1C01CY1FB11M1
DIAGNOSTIC IMAGING SVCS CORP
DENNIS ECKERT
PO BOX 5469
EVANSVILLE IN 47716

164110139086 1 1C01CY1FB11M1
DIAGNOSTIC TEC CONSULTANTS INC
AUDREY WEGST, PH.D.
4747 TROOST
KANSAS CITY MO 64110

101845107969 1 1C01CY1FB11M1
DIBENEDETTO ASSOC
P A DIBENEDETTO
231 SUTTON ST SUITE 2E
NORTH ANDOVER MA 01845

135806109559 1 1C01CY1FB11M1
DIGITAL ENGINEERING
SHERRY ALEXANDER
BUSINESS MGR
658 DISCOVERY DR
SUITE 135
HUNTSVILLE AL 35806

135806105946 1 1C01CY1FB11M1
DIGITAL ENGINEERING
TOM HANCOCK
658 DISCOVERY DRIVE
HUNTVILLE AL 35806

135806106016 1 1C01CY1FB11M1
DIGITAL ENGINEERING
MURVIN J KIMBRELL
DIRECTOR PRODUCT ASSURANCE
658 DISCOVERY DRIVE
HUNTSVILLE AL 35806

106475139014 1 1C01CY1FB11M1
DIVING SERVICES INC
NUCLEAR OPERATIONS
GLENN BARBERI
MANAGER
PO BOX 784
OLD SAYBROOK CT 06475

161021110861 1 1C01CY1FB11M1
DIXON PUBLIC LIBRARY
NANCY GILLFILLAN
LIBRARY DIRECTOR
221 HENNEPIN AVE
DIXON IL 61021

122101065227 1 1C01CY1FB11M1
DOMINION ENGINEERING INC
M J PARTRIDGE
6862 ELM STREET
MCLEAN VA 22101

148083104389 1 1C01CY1FB11M1
DOOR-MAN MANUFACTURING CO
DOOR-MAN MFG CO
ANDREW P JOHNSON JR
PRESIDENT
2291 ELLIOTT
TROY MI 48083

120006009672 1 1C01CY1FB11M1
DOUB, MUNTZING & GLASGOW
THOMAS DORIAN
PARTNER
808 17TH ST NW
SUITE 400
WASHINGTON DC 20006

148674107667 1 1C01CY1FB11M1
DOW CHEMICAL CO
RESEARCH CENTER
RADIATION SAFETY OFFICER
1803 BLDG H & ES/IH
MIDLAND MI 48674

190650052991 1 01CY1FB11M1
DRAGON VALVES INC
ROBERT E BOND
VICE PRESIDENT
PO BOX 489
NORWALK CA 90650

171309142239 1 1C01CY1FB11M1
DRESSER INDUSTRIAL VALVE
QAE, SYSTEMS & AUDITS
R R THOMAS
PO BOX 1430
ALEXANDRIA LA 71309

190255091622 1 1C01CY1FB11M1
DRESSER INDUSTRIES INC
DRESSER PUMP DIV
D J MOYER
QA MANAGER
5715 BICKETT ST
HUNTINGTON PARK CA 90255

114895137150 1 1C01CY1FB11M1
DRESSER-RAND
TURBINE MOTOR GENERATOR
MICHAEL SCHMIEDEL
SUPV OF QUALITY ENGR
37 COATS ST
WELLSVILLE NY 14895

106001093754 1 1C01CY1FB11M1
DUFRANE ASSOC
K H DUFRANE
PRESIDENT
7 HOLLY LANE
AVON CT 06001

129679103019 1 1C01CY1FB11M1
DUKE POWER CO
OCONEE 1 NPS
PLANT MANAGER
SENECA SC 29679

129710080556 1 1C01CY1FB11M1
DUKE POWER CO
CONST & MAINT DEPT CTRL DIV
E M COUCH
DIVISION MANAGER
PO BOX 223
CLOVER SC 29710

128242006327 1 1C01CY1FB11M1
DUKE POWER CO
CMD-NORTH
A R HOLLINS
DIVISION MANAGER
PO BOX 33189
CHARLOTTE NC 28242

128159142079 1 1C01CY1FB11M1
DUKE POWER CO
CMD-NORTH
C H RICHARDS
CRAFT MANAGER
PO BOX 25 DUKEVILLE RD
SPENCER NC 28159

128242081247 1 1C01CY1FB11M1
DUKE POWER CO
NUCLEAR PRODUCTION DEPT
H B TUCKER
VICE PRESIDENT
422 S. CHURCH ST
CHARLOTTE NC 28242

148674139241 1 1C01CY1FB11M1
DOW CHEMICAL CO
ANALYTICAL LABARCH REACTOR
C W KOCHER
REACTOR SUPERVISOR
1602 BUILDING
MIDLAND MI 48674

145750081801 1 1C01CY1FB11M1
DRAVO CORP
CONNEX PIPE SYSTEMS
THOMAS R SMITH
RADIATION SAFETY OFFICER
1115 GILMAN ST
MARIETTA OH 45750

102322106424 1 1C01CY1FB11M1
DRESSER INDUSTRIES INC
MASONEILAN DIV
ERNEST W KRAMER
NUCLEAR ENGINEER
85 BODWELL ST
AVON MA 02322

114895139672 1 1C01CY1FB11M1
DRESSER-RAND
STEAM TURBINE, MOTOR & GEN DIV
JOSEPH MENICHINO
NUCLEAR PRODUCT ENGINEER
37 COATS ST
WELLSVILLE NY 14895

128382104494 1 1C01CY1FB11M1
DUBOSE STEEL INC
JAMES DAILEY
QA MANAGER
PO BOX 1098
ROSEBORO NC 28382

129679104339 1 1C01CY1FB11M1
DUKE POWER CO
OCONEE TRAINING CENTER
PO BOX 1436
SENECA SC 29679

128242137593 1 1C01CY1FB11M1
DUKE POWER CO
QUALITY ASSURANCE DEPT
QA MANAGER
PO BOX 33189
CHARLOTTE NC 28242

129679106312 4 1C01CY1FB11M1
DUKE POWER CO
OCONEE NUCLEAR STATION
T D CURTIS
COMPLIANCE MANAGER
P O BOX 1439
SENECA SC 29679

129710080555 1 1C01CY1FB11M1
DUKE POWER CO
CATAWBA 1 NPS
T B OWEN
STATION MANAGER
PO BOX 256
CLOVER SC 29710

128078140702 2 1C01CY1FB11M1
DUKE POWER CO
NUCLEAR PRODUCTION DEPT
ROBERT SHARPE
COMPLIANCE MANAGER
12700 HAGERS FERRY RD
HUNTERSVILLE NC 28078

115077080571 1 1C01CY1FB11M1
DUQUESNE LIGHT CO
BEAVER VALLEY 1 NPS
GENERAL MGR NUCLEAR OPERATIONS
PO BOX 4
SHIPPINGPORT PA 15077

115279138719 1 1C01CY1FB11M1
DUQUESNE LIGHT CO
EXECUTIVE VICE PRESIDENT
JOHN J CAREY
OPERATIONS
301 GRANT ST-ONE OXFORD ST
PITTSBURGH PA 15279

115077137529 1 1C01CY1FB11M1
DUQUESNE LIGHT CO
NUCLEAR GROUP
KENNETH D GRADA
PO BOX 4
BVA
SHIPPINGPORT PA 15077

115077107138 1 1C01CY1FB11M1
DUQUESNE LIGHT CO
NUCLEAR CONSTRUCTION DIV
J D SIEBER
VICE PRESIDENT
PO BOX 4
SHIPPINGPORT PA 15077

115077106764 1 1C01CY1FB11M1
DUQUESNE LIGHT CO
BEAVER VALLEY PS
DAVID G SZUCS
SR ENGR NUCLEAR SAFETY DEPT
PO BOX 4
SHPPINGPORT PA 15077

108543137293 1 1C01CY1FB11M1
E R SQUIBB & SONS INC
RADIOPHARMACEUTICAL
CHARLES F BOYLE
TRANSPORTATION SUS ADM
CN 5250
PRINCETON NJ 08543

110048139572 1 1C01CY1FB11M1
EBASCO SERVICES INC
NUCLEAR LICENSING
EDWARD J BORELLA
CHIEF ENGINEER
TWO WORLD TRADE CENTER
NEW YORK NY 10048

110048091486 1 1C01CY1FB11M1
EBASCO SERVICES INC
CORPORATE QUALITY PROGRAMS
B R MAZO
VICE PRESIDENT
2 WORLD TRADE CENTER
NEW YORK NY 10048

170062109481 1 1C01CY1FB11M1
EBASCO SERVICES INC
C RASNIC
2400 VETERANS MEMORIAL BLVD
SUITE 200
KENNER LA 70062

187504139414 1 1C01CY1FB11M1
EBERLINE INSTRUMENT CORP
ROBERT GRAY
SALES MANAGER
PO BOX 2108
SANTA FE NM 87504

107093109599 1 1C01CY1FB11M1
ECOTECH INC
PRESIDENT
6702 BERGENLINE AVE
WEST NEW YORK NJ 07093

183415102911 1 1C01CY1FB11M1
EG&G IDAHO INC
INEL TECH LIBRARY
PO BOX 1625
2300
IDAHO FALLS ID 83415

115077079396 1 1C01CY1FB11M1
DUQUESNE LIGHT CO
NUCLEAR GROUP
S C FENNER
PO BOX 4
BV-QA
SHIPPINGPORT PA 15077

115077080919 1 1C01CY1FB11M1
DUQUESNE LIGHT CO
S LACEY
GENERAL MGR,NUCLEAR OPERATIONS
PO BOX 4
SHIPPINGPORT PA 15077

115077103194 1 1C01CY1FB11M1
DUQUESNE LIGHT CO
T A SOCKACI
SUPERVISOR
PO BOX 321
SHIPPINGPORT PA 15077

115077079148 1 1C01CY1FB11M1
DUQUESNE LIGHT CO
CORP NUCLEAR SERVICES UNIT
N R TONET
MANAGE NED
PO BOX 321
SHIPPINGPORT PA 15077

106810141728 1 1C01CY1FB11M1
EATON/CONSOLIDATED
PLANT 2
GEORGE GARRITY
MANAGER POWER INDUSTRY
9 SOUTH STREET
DANBURY CT 06810

107071140120 1 1C01CY1FB11M1
EBASCO SERVICES INC
LOUIS A GUNTHER
SUPERVISING ENGINEER
210 CLAY AVENUE
LYNDHURST NJ 07071

130092026013 1 1C01CY1FB11M1
EBASCO SERVICES INC
JAMES C O'HARA
CONSULTING ENGINEER
145 TECHNOLOGY PARK/ATLANTA
NORCROSS GA 30092

107071141029 1 1C01CY1FB11M1
EBASCO SERVICES INC
QUALITY ASSURANCE
K G ROWLAND
210 CLAY AVE
88TH FL
LYNDHURST NJ 07071

117057141671 1 1C01CY1FB11M1
ECAD SERVICES INC
RICHARD D MEININGER
GENERAL MANAGER
PO BOX 299
MIDDLETOWN PA 17057

120555137425 1 1C01CY1FB11M1
EG&G
VICTOR SHAH
007 N/L
WASINGTON DC 20555

183415108908 1 1C01CY1FB11M1
EG&G IDAHO INC
ED ANDERSON
P O BOX 1625
2514
IDAHO FALLS ID 83415

183402140077 1 1C01CY1FB11M1
EG&G IDAHO INC
FACILITIES & MAINTENANCE DEPT
W A BAXTER
PO BOX 1625
MS 4115
IDAHO FALLS ID 83402

183415091946 1 1C01CY1FB11M1
EG&G IDAHO INC
PROGRAMS RISK ADVISORY CMTE
J CURTIS HAIRE
CHAIRMAN
PO BOX 1625
IDAHO FALLS ID 83415

183415103335 1 1C01CY1FB11M1
EG&G IDAHO INC
DAVID B VAN LEUVEN
PO BOX 1625
3512
IDAHO FALLS ID 83415

135806142324 1 1C01CY1FB11M1
EGS CORP INTL
BARBARA JENKINS
OFFICE MANAGER
150 WEST PARK LOOP
SUITE 301
HUNTSVILLE AL 35806

183405140964 1 1C01CY1FB11M1
EI INTERNATIONAL
CORPORATE SERVICES
BENITA L POLLACK
PO BOX 50736
IDAHO FALLS ID 83405

194303138065 1 1C01CY1FB11M1
ELECTRIC POWER RESEARCH INST
ENGINEER & OPERATIONS DEPT
J. D BYRON
PROJECT MANAGER
P.O. BOX 10412
PALO ALTO CA 94303

194303105138 1 1C01CY1FB11M1
ELECTRIC POWER RESEARCH INST
NSAC
ROBERT LEYSE
PROGRAM MANAGER
P O BOX 10412
PALO ALTO CA 94303

120008008013 1 1C01CY1FB11M1
EMBASSY OF GREAT BRITAIN
SCIENCE TECH & ENERGY DEPT
DR D J LUMLEY
FIRST SECRETARY (ENERGY)
3100 MASSACHUSETTS AVENUE NW
WASHINGTON DC 20008

120008137566 1 1C01CY1FB11M1
EMBASSY OF JAPAN
SCIENCE SECTION
TAKAO KURAMOCHI
2520 MASSACHUSETTS AVE NW
SUITE 675
WASHINGTON DC 20008

1ITALY008074 1 1C01CY1FB11M1
ENEA-DISP
DIV OF EXTERNAL RELATIONS
VANNI PIERO
ADMINISTRATOR
VIA VITALIANO BRANCATI 48
00144 ROME ITALY

102893141791 1 1C01CY1FB11M1
ENGINEERING ANALYSIS SERVICES
R MASTERSON
VICE PRESIDENT
207 QUAKER LANE
WEST WARWICK RI 02893

183415137692 1 1C01CY1FB11M1
EG&G IDAHO INC
J N DAVIS
RWMC/SWEPP PROGRAMS MGR
PO BOX 1625 M/S 4201
9208
IDAHO FALLS ID 83415

183415066803 1 1C01CY1FB11M1
EG&G IDAHO INC
J SINGH
PO BOX 1625
IDAHO FALLS ID 83415

183415062748 1 1C01CY1FB11M1
EG&G IDAHO INC
REQUIREMENT & SYSTEMS
M S VARGO
PO BOX 1625
4107
IDAHO FALLS ID 83415

135806142291 1 1C01CY1FB11M1
EGS CORP INTL
FREDRICK L ROY
SR PROGRAM MANAGER
150 WEST PARK LOOP
STE 301
HUNTSVILLE AL 35806

1SWITZ057566 1 1C01CY1FB11M1
EIDG AMT FUR ENERGIEWIRTSCHAFT
NUCLEAR SAFETY DIVISION
ROLAND NAEGELIN
ADMINISTRATOR
5303 WUERENLINGEN SWITZERLA

194303064766 1 1C01CY1FB11M1
ELECTRIC POWER RESEARCH INST
NUCLEAR POWER
NANCY E HALL
DATA CONTROL CLERK
3412 HILLVIEW AE PO BOX 10412
PALO ALTO CA 94303

194303141968 1 1C01CY1FB11M1
ELECTRIC POWER RESEARCH INST
GARY VINE
PO BOX 10411
PALO ALTO CA 94303

120008000334 1 1C01CY1FB11M1
EMBASSY OF GREAT BRITAIN
SCIENCE & TECHNOLOGY
EDGAR LUCAS
PUBLICATION OFFICER
3100 MASSACHUSETTS AVE NW
WASHINGTON DC 20008

120006093383 1 1C01CY1FB11M1
ENEA
TERM/VADEC CASACCIA
ENZO PANAGIA
818 18TH ST NW
SUITE 500
WASHINGTON DC 20006

115668142098 1 1C01CY1FB11M1
ENERCON SERVICES INC
PROJECT DEVELOPMENT
MICHAEL J MANSKI
PROJECT MANAGER
5001 NORTHLAWN DR
MURRYSVILLE PA 15668

119006082333 1 1C01CY1FB11M1
ENGLESSON & CASAPIS CONSULTANT
GEORGE A ENGLESSON
2186 PACKARD AVE
HUNTINGDON VALLEY PA 19006

101701141285 1 1C01CY1FB11M1
ENGR PLANNING & MGMT INC
ENGINEERING SVCS ADMIN
JOANNE HAYES
959 CONCORD ST
FRAMINGHAM MA 01701

114068137654 1 1C01CY1FB11M1
ENSA INC
DR.MARTIN N HAAS
PO BOX 7
GETZVILLE NY 14068

194105140363 1 1C01CY1FB11M1
EGE ENGR INC
ADVANCE ANALYSIS
DR. JAMES JOHNSON
595 MARKET ST
18TH FLR
SAN FRANCISCO CA 94105

1SAFRI057401 1 1C01CY1FB11M1
ESCOM CORP
LIBRARY
L VAN RENSBURG
LIBRARIAN
PO BOX 1091
JOHANNESBURG 2000 SAFRICA

120895094456 1 1C01CY1FB11M1
ETA TECHNICAL ASSOCIATES
11221 WOODSON AVE
KENSINGTON MD 20895

103833104242 1 1C01CY1FB11M1
EXETER PUBLIC LIBRARY
LEE PERKINS
ASSISTANT LIBRARIAN
FOUNDERS PARK
EXETER NH 03833

119612138732 1 1C01CY1FB11M1
EXIDE CORP
C H REICHART
CONTRACT ADMINISTRATOR
PO BOX 14205
READING PA 19612

102062100689 1 1C01CY1FB11M1
FACTORY MUTUAL ENGINEERING
MYRON J MILLER
PECIAL PROJECTS ENGINEER
1151 BOSTON-PROVIDENCE TPKE
PO BX 9102
NORWOOD MA 02062

129180104236 1 1C01CY1FB11M1
FAIRFIELD COUNTY LIBRARY
SARAH D MCMASTER
DIRECTOR
GARDEN & WASHINGTON STS
WINNSBORO SC 29180

192069137415 1 1C01CY1FB11M1
FCI
MALCOLM M MCQUEEN
PRESIDENT
1755 LACOSTA MEADOWS DR
SAN MARCOS CA 92069

150158091507 1 1C01CY1FB11M1
FISHER CONTROLS INTERNATIONAL
FINAL CONTROL SYSTEMS
D A CAHILL
QA MANAGER
205 S CENTER ST PO BOX 190
MARSHALLTOWN IA 50158

1SPAIN107535 1 1C01CY1FB11M1
ENRESA
EMPRESA NACIONAL DE RESIDUOS
PEDRO C MARTINEZ
RADIOACTIVOS
PASEO DE LA CASTELLANA 135
28046 MADRID SPAIN

116803106477 1 1C01CY1FB11M1
ENVIRON COALITION ON NUC POWER
JUDITH JOHNSRUD
433 ORLANDO AVE
STATE COLLEGE PA 16803

122030110076 1 1C01CY1FB11M1
ERCE
LIBRARY
ALICIA A WEST
3211 JERMANTOWN RD
SUITE 1000
FAIRFAX VA 22030

122314079030 1 1C01CY1FB11M1
ESSEX CORP
HAROLD E PRICE
VICE PRESIDENT
333 N FAIRFAX ST
ALEXANDRIA VA 22314

120852138794 1 1C01CY1FB11M1
EXCEL SERVICES CORP
MARY A HUNTER
OFFICE MANAGER
11921 ROCKVILLE PIKE
SUITE 210
ROCKVILLE MD 20852

119601139120 1 1C01CY1FB11M1
EXIDE CORP
INDUSTRIAL
ROBERT V HIGHT
QUALITY ASSURANCE ENGINEER
645 PENN STREET
READING PA 19601

175229081453 1 1C01CY1FB11M1
F & M TECHNICAL SERVICES INC
D L MARTIN
PRESIDENT
PO BOX 59387
DALLAS TX 75229

102062113543 1 1C01CY1FB11M1
FACTORY MUTUAL RESEARCH CORP
PAUL H DOBSON
SENIOR ENGINEER
1151 BOSTON-PROVIDENCE TPKE
NORWOOD MA 02062

145150137302 1 1C01CY1FB11M1
FARWELL & HENDRICKS INC
JAMES S HANNER
SALES MANAGER
1000 FORD CIRCLE - SUITE C
MILFORD OH 45150

1FINLA003521 1 1C01CY1FB11M1
FINLAND INST OF RADIAT PROTECT
DEPARTMENT OF NUCLEAR SAFETY
A VUORINEN
DIRECTOR
P O BOX 268
00101 HELSINKI 10 FINLAND

150158053007 1 1C01CY1FB11M1
FISHER CONTROLS INTERNATIONAL
CHARLES COLWELL
MANAGER PROJECT PLANNING
205 S CENTER ST
MARSHALLTOWN IA 50158

150158021209 1 1C01CY1FB11M1
FISHER CONTROLS INTERNATIONAL
FLOYD D JURY
NUCLEAR TECH MANAGER
PO BOX 11
MARSHALLTOWN IA 50158

132399111052 1 1C01CY1FB11M1
FLORIDA DHRS
OFC OF RADIATION CONTROL
MARY CLARK PHD
1317 WINEWOOD BLVD
HSER
TALLAHASSEE FL 32399

134954142169 1 1C01CY1FB11M1
FLORIDA POWER & LIGHT CO
NUCLEAR ENERGY
PLANT MANAGER
PO BOX 128
FORT PIERCE FL 34954

133102105878 1 1C01CY1FB11M1
FLORIDA POWER & LIGHT CO
TURKEY POINT N
PLANT MANAGER N
PO BOX 029100 PTN
MIAMI FL 33102

133102080592 1 1C01CY1FB11M1
FLORIDA POWER & LIGHT CO
TURKEY POINT NUCLEAR
J E CROSS
PLANT MGR N
PO BOX 029100 PTN
MIAMI FL 33102

133454064618 1 1C01CY1FB11M1
FLORIDA POWER & LIGHT CO
ST LUCIE PLANT
G KOZLOWSKI
PO BOX 128
PSL-1 QC
FT PIERCE FL 33454

133102103477 1 1C01CY1FB11M1
FLORIDA POWER & LIGHT CO
K N YORK
DOCUMENT CONTROL SUPVR
PO BOX 029100
MIAMI FL 33102

132629141863 1 1C01CY1FB11M1
FLORIDA POWER CORP
NUCLEAR OPERATIONS
WALTER S WILGUS
VICE PRESIDENT
PO BOX 219-NA-2I
CRYSTAL RIVER FL 32629

129615139000 1 1C01CY1FB11M1
FLUOR CONSTRUCTORS INC
POWER DIVISION
150 EXECUTIVE CTR DR-KOGEN CTR
SUITE B40
GREENVILLE SC 29615

160606008712 1 1C01CY1FB11M1
FLUOR DANIEL
POWER SECTOR CHICAGO OFFICE
GEORGE V SCHWAB
SENIOR ENGR
200 W MONROE ST
CHICAGO IL 60606

192730139896 1 1C01CY1FB11M1
FLUOR DANIEL INC
LESLIE BOWEN
3333 MICHELSON DR
B10
IRVINE CA 92730

132399111024 3 1C01CY1FB11M1
FLORIDA DEPT OF HLTH & REHAB
OFFICE OF RADIATION CONTROL
JACOB D NASH
PUBLIC HEALTH PHYSICIST MGR
1317 WINEWOOD BLVD
TALLAHASSEE FL 32399

133199142320 1 1C01CY1FB11M1
FLORIDA INTERNATIONAL UNIV
URBAN & REGIONAL DOCUMENTS
ESTHER B GONZALEZ
DOCUMENTS LIBRARIAN
TAMIAMI CAMPUS-LIBRARY
MIAMI FL 33199

133457080593 1 1C01CY1FB11M1
FLORIDA POWER & LIGHT CO
ST LUCIE 1 NPS
PLANT MANAGER
JENSEN BEACH FL 33457

133408140916 1 1C01CY1FB11M1
FLORIDA POWER & LIGHT CO
W F CONWAY
SR VICE PRESIDENT
P.O. BOX 14000
JUNO BEACH FL 33408

133408081117 1 1C01CY1FB11M1
FLORIDA POWER & LIGHT CO
NUCLEAR LICENSING
J A DEMASTRY
STAFF ENGINEER
PO BOX 14000
JUNO BEACH FL 33408

133402106373 1 1C01CY1FB11M1
FLORIDA POWER & LIGHT CO
CORP RECORDS SVCS DEPT
JACK P LEWIS
CORP RECORDS ADMINISTRATOR
3350 NORTHLAKE BLVD DRW D
WEST PALM BEACH FL 33402

132629081356 1 1C01CY1FB11M1
FLORIDA POWER CORP
NUCLEAR OPERATIONSS
PAUL F MCKEE
DIRECTOR NUC PLANT OPERATIONS
PO BOX 219-NA-2C
CRYSTAL RIVER FL 32629

116107103177 1 1C01CY1FB11M1
FLOWLINE CORP
BUTLER AVENUE EXTENSION
R E JOHNSON
QA MANAGER
PO BOX 7027
NEW CASTLE PA 16107

129601137140 1 1C01CY1FB11M1
FLUOR DANIEL
POWER SERVICES
JOHN P MADISON RSO
DANIEL BLDG
DB08A
GREENVILLE SC 29601

160606107872 1 1C01CY1FB11M1
FLUOR DANIEL
CHICAGO DIV
E J SEABERG
LIBRARIAN
200 WEST MONROE ST
CHICAGO IL 60606

192730139702 1 1C01CY1FB11M1
FLUOR DANIEL INC
IRVINE TECHNICAL LIB-CNQ
FIA VITAR
HEAD LIBRARIAN
3333 MICHELSON DR
IRVINE CA 92730

144202091484 1 1C01CY1FB11M1
FLUOROCARBON CO
DEKORON DIV
KELLY A KINNETT
QA MANAGER
1199 S CHILLICOTHE RD
AURORA OH 44202

1FRANC108925 1 1C01CY1FB11M1
FRAMATOME
MANAGER NUCLEAR SAFETY
TOUR FIAT CEDEX 16
92084
PARIS LA DEFENSE FRANCE

115146137963 1 1C01CY1FB11M1
FRAMATOME
PITTSBURGH EXPO MART
CLAUDIA GRANCHE
105 MALL BLVD-LEVEL 3 . EAST
MONROEVILLE PA 15146

107039056039 1 1C01CY1FB11M1
FW ENERGY A' LICATIONS INC
CHARLES NASH
8 PEACH TREE HILL RD
LIVINGSTON NJ 07039

177484091399 1 1C01CY1FB11M1
G H BETTIS
GALVESTON-HOUSTON CORP
A LOCASCIO
QA MANAGER
18703 G H CIRCLE PO BOX 508
WALLER TX 77484

195125065234 1 1C01CY1FB11M1
GE NUCLEAR ENERGY
L M SHAEFFER
175 CURTNER AVE
MS 682
SAN JOSE CA 95125

192138082216 1 1C01CY1FB11M1
GENERAL ATOMIC CO
LICENSING SAF & NUC COMP
KEITH E ASMUSSEN
MANAGER
PO BOX 85608
SAN DIEGO CA 92138

192138139869 1 1C01CY1FB11M1
GENERAL ATOMICS
QUALITY ASSURANCE
C R FISHER
DIRECTOR
PO BOX 85608
SAN DIEGO CA 92138

106355110616 1 1C01CY1FB11M1
GENERAL DYNAMICS SERVICE CO
HEALTH PHYSICS SERVICES
W ZURLTENE
SUPERVISOR
14 HOLMES ST-REACTOR PLANT SVC
MYSTIC CT 06355

128402080895 1 1C01CY1FB11M1
GENERAL ELECTRIC CO
WILMINGTON MANUFACTURING DEPT
GENERAL MANAGER
PO BOX 780
WILMINGTON NC 28402

152601053024 1 1C01CY1FB11M1
GENERAL ELECTRIC CO
SWITCHGEAR BUSINESS DEPARTMENT
DAVID I BRAZIER
MGR SWITCHGEAR OPERATION
AGENCY ROAD P O BOX 488
BURLINGTON IA 52601

175001053010 1 1C01CY1FB11M1
FORNEY ENGINEERING CO
QUALITY ASSURANCE
WAYNE W FOSTER
MANAGER-QUALITY ASSURANCE
PO BOX 189
ADDISON TX 75001

122209108931 1 1C01CY1FB11M1
FRAMATOME
U S OPERATIONS
CHRISTIAN BUCHALET
1911 N FORT MYER DRIVE
SUITE 804
ROSSLYN VA 22209

1BRAZI138698 1 1C01CY1FB11M1
FURNAS-CENTRAIS ELETRICAS S.A.
DIVISAO DE BIBLIOTECA
RUA REAL GRANDEZA,219 BLOCA B
SALA 203
22283 RIO DE JANEIRO BRAZIL

194598094189 1 1C01CY1FB11M1
G C SLAGIS ASSOCIATES
GERALD C SLAGIS
3520 ERIS COURT
WALNUT CREEK CA 94598

133715140114 1 1C01CY1FB11M1
G P TECHNICAL SERVICES INC
GERALD B POORE
PRESIDENT
910 PINELLAS BAYWAY - APT 106
TIERRA VERDE FL 33715

128402001616 1 1C01CY1FB11M1
GE-NUCLEAR ENERGY
R FOLECK
SR SPEC LICENSING
P O BOX 780
J26
WILMINGTON NC 28402

192138111138 1 1C01CY1FB11M1
GENERAL ATOMIC CO
QUALITY SYSTEMS & DEFENSE QA
B L COLEMAN
MANAGER
PO BOX 85608
SAN DIEGO CA 92138

106340081359 1 1C01CY1FB11M1
GENERAL DYNAMICS CORP
ELECTRIC BOAT DIV
R F SAMMATARO
75 EASTERN POINT ROAD
D-478
GROTON CT 06340

194566107954 1 1C01CY1FB11M1
GENERAL ELECTRIC CO
VALLECITOS NUCLEAR CENTER
LICENSING ADMINISTRATOR
PO BOX 460
PLEASANTON CA 94566

195125141966 1 1C01CY1FB11M1
GENERAL ELECTRIC CO
LICENSING & CONSULTING SVCS
RICARDO ARTIGAS
MANAGER
175 COURTNER AVE-MAIL CODE 682
SAN JOSE CA 95125

119406110570 1 1C01CY1FB11M1
GENERAL ELECTRIC CO
QUALITY ASSURANCE
RICHARD E CAMERON
NDE SPECIALIST
1000 FIRST AVE
KING OF PRUSSIA PA 19406

195125064718 1 1C01CY1FB11M1
GENERAL ELECTRIC CO
NUCLEAR ENERGY
J M CASE
175 CURTNER AVE
862
SAN JOSE CA 95125

128402053025 1 1C01CY1FB11M1
GENERAL ELECTRIC CO
NUCLEAR FUEL & COMPONENTS MFG
J W CURRIER
PO BOX 780
A-32
WILMINGTON NC 28402

195125139852 1 1C01CY1FB11M1
GENERAL ELECTRIC CO
NUCLEAR ENGY BUSINESS OPS
C J DEACON
175 CURTNER AVE
MC800
SAN JOSE CA 95125

195125139853 1 1C01CY1FB11M1
GENERAL ELECTRIC CO
D L FOREMAN
PROJECT MANAGER
175 CURTNER AVE M/C 664
SAN JOSE CA 95125

160521110534 1 1C01CY1FB11M1
GENERAL ELECTRIC CO
GERALD L HAYES
2311 WEST 22ND ST
SUITE 201
OAK BROOK IL 60521

160450062516 1 1C01CY1FB11M1
GENERAL ELECTRIC CO
MORRIS OPERATION
T E INGELS
PLANT MANAGER
7555 E COLLINS RD
MORRIS IL 60450

119406092316 1 1C01CY1FB11M1
GENERAL ELECTRIC CO
NUCLEAR SERVICES DEPT
L L LANTZ
REGIONAL ENGR MANAGER
1000 FIRST AVE
KING OF PRUSSIA PA 19406

195125091521 1 1C01CY1FB11M1
GENERAL ELECTRIC CO
G E NUCLEAR ENERGY
J L MURRAY
175 CURTNER AVE
M/C 862
SAN JOSE CA 95125

195125091526 1 1C01CY1FB11M1
GENERAL ELECTRIC CO
NUCLEAR ENGY BUSINESS
NOEL SHIRLEY
175 CURTNER AVE
M/C 687
SAN JOSE CA 95125

161702103399 1 1C01CY1FB11M1
GENERAL ELECTRIC CO
CHARLES WETTER
PO BOX 2913
BLOOMINGTON IL 61702

160015138777 1 1C01CY1FB11M1
GENERAL ENERGY SYSTEMS CORP
MICHAEL J MAY
2525 WAUKEGAN ROAD
BANNOCKBURN IL 60015

194566001593 1 1C01CY1FB11M1
GENERAL ELECTRIC CO
VALLECITOS NUCLEAR CENTER
G E CUNNINGHAM
SR LICENSING ENGINEER
PO BOX 460
PLEASANTON CA 94566

194566020460 1 1C01CY1FB11M1
GENERAL ELECTRIC CO
VALLECITOS NUCLEAR CENTER
R W DARMITZEL
PO BOX 460
PLEASANTON CA 94566

112345117394 1 1C01CY1FB11M1
GENERAL ELECTRIC CO
HEALTH PHYSICS
R W DICKINSON
SPECIALIST
BLDG 273 - RM 230
SCHENECTADY NY 12345

120852138728 1 1C01CY1FB11M1
GENERAL ELECTRIC CO
L S GIFFORD
12300 TWINBROOK PKWY
SUITE 315
ROCKVILLE MD 20852

160521110865 1 1C01CY1FB11M1
GENERAL ELECTRIC CO
RICHARD C HOOPER
MANAGER-INSPECTION SERVICES
2311 W 22 ST
#201
OAK BROOK IL 60521

195125093385 1 1C01CY1FB11M1
GENERAL ELECTRIC CO
NUCLEAR ENERGY
ARNOLD KOSLOW
175 CURTNER AVE
M/C 463
SAN JOSE CA 95125

195125006033 1 1C01CY1FB11M1
GENERAL ELECTRIC CO
R C MITCHELL
MGR, NUCLEAR PRODUCT LICENSING
175 CURTNER AVE
M/C 682
SAN JOSE CA 95125

119355063069 1 1C01CY1FB11M1
GENERAL ELECTRIC CO
METER & CONTROL BUSINESS
CASE SCOTT
205 GREAT VALLEY PKY
MD-1106
MALVERN PA 19355

195125006384 1 1C01CY1FB11M1
GENERAL ELECTRIC CO
NUCLEAR ENERGY DIVISION
JOHN M SKARPELOS
175 CURTNER AVENUE
MC-783
SAN JOSE CA 95125

160015140115 1 1C01CY1FB11M1
GENERAL ENERGY SYSTEMS CORP
M J MAY
2525 WAUKEGAN RD
SUITE 220
BANNOCKBURN IL 60015

121046139392 1 1C01CY1FB11M1
GENERAL PHYSICS CORP
TECHNICAL INFORMATION CENTER
N L KNIGHT
MANAGER
6700 ALEXANDER BELL DR
COLUMBIA MD 21046

121046139622 1 1C01CY1FB11M1
GENERAL PHYSICS CORP
BRENDA TIDMORE
6700 ALEXANDER BELL DRIVE
COLUMBIA MD 21046

130309106841 1 1C01CY1FB11M1
GEORGIA DEPT OF HUMAN RESOURCE
RADIOLOGICAL HEALTH SECTION
THOMAS E HILL
878 PEACHTREE ST
ROOM 600
ATLANTA GA 30309

131513080543 1 1C01CY1FB11M1
GEORGIA POWER CO
PLANT E I HATCH
PLANT MANAGER
PO BOX 442
BAXLEY GA 31513

131513080897 1 1C01CY1FB11M1
GEORGIA POWER CO
MACON
O M FRASER
SITE QA MANAGER
PO BOX 442
BAXLEY GA 31513

135201141331 1 1C01CY1FB11M1
GEORGIA POWER CO
NUCLEAR-VOGTLE
C. K MCCOY
VICE-PRESIDENT
P.O. BOX 1295
BIRMINGHAM AL 35201

130334080966 1 1C01CY1FB11M1
GEORGIA PUBLIC SERVICE COM
UTILITIES DIV
B B KNOWLES
DIRECTOR OF UTILITIES
244 WASHINGTON ST SW
ATLANTA GA 30334

110001001194 1 1C01CY1FB11M1
GIBBS & HILL INC
LIBRARY
FRANK O'NEILL
11 PENN PLAZA
4TH FL
NEW YORK NY 10001

119603007983 1 1C01CY1FB11M1
GILBERT ASSOCIATES INC
LIBRARY
B LE BOULCH
PO BOX 1498
READING PA 19603

119603008708 1 1C01CY1FB11M1
GILBERT/COMMONWEALTH INC
DEBORAH M BOSLER
LIBRARIAN
PO BOX 1498
READING PA 19603

160148142186 1 1C01CY1FB11M1
GNB INDUSTRIAL BATTERY CO
WOODLAKE CORP PARK
DENNIS M FISCHER
DIRECTOR OF QUALITY ASSURANCE
829 PARKVIEW BLVD
LOMBARD IL 60148

1[illegible]301080913 1 1C01CY1FB11M1
GOVERNORS OFC OF EMERG MGMT
STATE OFFICE PARK SOUTH
GEORGE L IVERSON
DIRECTOR
107 PLEASANT ST
CONCORD NH 03301

106471103593 1 1C01CY1FB11M1
GENERAL RESISTANCE INC
INTERNATIONAL INSTRUMENTS
M J COPPOLA
QA MANAGER
TWIN LAKES RD PO BOX 185
N BRANFORD CT 06471

130332107955 1 1C01CY1FB11M1
GEORGIA INSTITUTE OF TECH
NUCLEAR RESEARCH CTR
RATIB A KARAM
900 ATLANTIC DR N. W.
0425
ATLANTA GA 30332

130830092719 1 1C01CY1FB11M1
GEORGIA POWER CO
NUCLEAR OPERATIONS
G BOCKHOLD
P O BOX 1600
POB 299-A
WAYNESBORO GA 30830

130830080902 1 1C01CY1FB11M1
GEORGIA POWER CO
QUALITY ASSURANCE
G R FREDERICK
QA SITE MANAGER
PO BOX 1600
WAYNESBORO GA 30830

131513137490 1 1C01CY1FB11M1
GEORGIA POWER CO
PLANT E I HATCHONS
S B TIPPS
PO BOX 439
333/16
BAXLEY GA 31513

1WGERM092113 1 1C01CY1FB11M1
GESELLSCHAFT FUR REAKTORSICHE
E LINDAUER
GLOCKENGASSE 2
5000 COLOGNE 1 WGERMANY

191720057035 1 1C01CY1FB11M1
GIDEP OPERATIONS CTR
JIM C RICHARDS
PROGRAM DIRECTOR
CORONA CA 91720

119603091532 1 1C01CY1FB11M1
GILBERT COMMONWEALTH
N R BARKER
VICE PRESIDENT
PO BOX 1498
READING PA 19603

131520026178 1 1C01CY1FB11M1
GLYNN COUNTY HEALTH DEPT
JERRY MORRIS
RADIATION SAFETY OFFICER
1609 NEWCASTLE ST
BRUNSWICK GA 31520

113148000097 1 1C01CY1FB11M1
GOULDS PUMPS INC
NUCLEAR POWER
D R HYATT
240 FALL ST
SENECA FALLS NY 13148

117057080586 1 1C01CY1FB11M1
GPU NUCLEAR
TMI 1 NPS
PLANT MANAGER
MIDDLETOWN PA 17057

117057081274 1 1C01CY1FB11M1
GPU NUCLEAR
DOUG BEDELL
PO BOX 480
MIDDETOWN PA 17057

108731081561 1 1C01CY1FB11M1
GPU NUCLEAR
OYSTER CREEK NPS
E E FITZPATRICK
VICE PRESIDENT & DIRECTOR
PO BOX 388
FORKED RIVER NJ 08731

107054005790 1 1C01CY1FB11M1
GPU NUCLEAR CORP
LIBRARY
1 UPPER POND RD
PARSIPPANY NJ 07054

107054141967 1 1C01CY1FB11M1
GPU NUCLEAR CORP
ALWR UTIL STEERING COMMITTEE
EDWIN E KINTNER
CHAIRMAN
ONE UPPER POND RD
PARSIPPANY NJ 07054

107083100789 1 1C01CY1FB11M1
GRAVER CHEMICAL
CHEMICAL PRODUCTS
KENNETH A LORDY
SUPVR CHEM PRODUCTS
2720 US HWY 22
UNION NJ 07083

1GREEC057557 1 1C01CY1FB11M1
GREEK ATOMIC ENERGY COMMISSION
NUCLEAR TECHNOLOGY DEPT
JOHN KOLLAS
ADMINISTRATOR
15310 AGHIA PARASKEVI
ATTIKI GREECE

101301104205 1 1C01CY1FB11M1
GREENFIELD COMMUNITY COLLEGE
LIBRARY/LEARNING RESOURCE CTR
MARGARET E HOWLAND
DIRECTOR OF LEARNING RESOURCES
1 COLLEGE DR
GREENFIELD MA 01301

111801139429 1 1C01CY1FB11M1
GRUPO CIAT USA INC
L GALINDO
VICE PRESIDENT
111 W NICHOLAI ST
HICKSVILLE NY 11801

132520008709 1 1C01CY1FB11M1
GULF POWER CO
POWER GENERATION & TRANSMIS
GEORGE O LAYMAN
ASST TO VICE PRESIDENT
PO BOX 115
PENSACOLA FL 32520

170775080517 1 1C01CY1FB11M1
GULF STATES UTILITIES CO
RIVER BEND 1 NPS
PLANT MANAGER
ST FRANCISVILLE LA 70775

177704139840 1 1C01CY1FB11M1
GULF STATES UTILITIES CO
LEIF L DIETRICH
SUPERVISOR NUCLEAR LICENSING
PO BOX 2951
BEAUMONT TX 77704

117057091775 1 1C01CY1FB11M1
GPU NUCLEAR
TMI 2 LICENSING
JAMES J BYRNE
MANAGER TMI 2 LICENSING
PO BOX 480
MIDDLETOWN PA 17057

107054097605 1 1C01CY1FB11M1
GPU NUCLEAR
MAINTENANCE CONST & FAC
RICHARD HEWARD
VICE PRESIDENT
ONE UPPER POND RD
PARSIPPANY NJ 07054

108731137908 1 1C01CY1FB11M1
GPU NUCLEAR CORP
G W BUSCH
LICENSING MGR
PO BOX 388
FORKED RIVER NJ 08731

117057137823 1 1C01CY1FB11M1
GPU NUCLEAR CORP
MICHAEL B ROCHE
VICE PRES & DIRECTOR-TMI2
PO BOX 480
MIDDLETOWN PA 17057

1GREEC064850 1 1C01CY1FB11M1
GREEK ATOMIC ENERGY COMMISSION
NUCLEAR RESEARCH CENTER
N G CHRYSOCHOIDES
ADMINISTRATOR
AGHIA PARASKEVI
ATTIKI GREECE

180631142321 1 1C01CY1FB11M1
GREELEY PUBLIC LIBRARY
CITY COMPLEX BUILDING
SHIRLEY SOENKSEN
919 7TH ST
GREELEY CO 80631

102910139227 1 1C01CY1FB11M1
GRINNELL CORP
EDWARD BEFFA
PLANT MANAGER
1341 ELMWOOD AVE
CRANSTON RI 02910

166071091701 1 1C01CY1FB11M1
GULF & WESTERN MFG CO
TAYLOR FORGE ENGR SYS
STAN D GRIGGS
QA MANAGER
1ST & IRON ST
PAOLA KS 66071

132520103304 1 1C01CY1FB11M1
GULF POWER CO
POWER GENERATION & TRANSMIS
GEORGE O LAYMAN
ASST TO VICE PRESIDENT
PO BOX 1151
PENSACOLA FL 32520

170775110527 1 1C01CY1FB11M1
GULF STATES UTILITIES CO
NUCLEAR LICENSING
JAMES C DEDDENS
SENIOR VICE PRESIDENT (RBNG)
PO BOX 220
ST FRANCISVILLE LA 70775

170775062571 1 1C01CY1FB11M1
GULF STATES UTILITIES CO
RIVER BEND STATION LIBRARY
SHARON EAMES
PO BOX 220
ST FRANCISVILLE LA 70775

111717138996 1 1C01CY1FB11M1
GULIO PARACAT CONSULTANTS INC
JULIO PARACAT
18 GRAHN DR
BRENTWOOD NY 11717

195050094117 1 1C01CY1FB11M1
HALCON CORP
1400 COLEMAN AVE
SUITE G23
SANTA CLARA CA 95050

153201139102 1 1C01CY1FB11M1
HARNISCHFEGER CORP
INDUSTRIAL DIV
GEORGE BOEHMER
MANAGER QUALITY ENGRG
4400 W NATIONAL AVE
MILWAUKEE WI 53201

106102140756 1 1C01CY1FB11M1
HARTFORD STEAM BOILER
CODES & STANDARDS
W LAROCHELLE
ASST MANAGER
ONE STATE ST
HARTFORD CT 06102

196813138681 1 1C01CY1FB11M1
HAWAII DEPT OF HEALTH
ENVIRON HEALTH
BRUCE ANDERSON
DEPUTY DIRECTOR FOR ENV HLTH
PO BOX 3378
HONOLULU HI 96813

136130111026 1 1C01CY1FB11M1
HEALTH ADMINISTRATION
DR. EARL FOW
STATE HEALTH OFFICER
STATE OFFICE BLDG
RM 381
MONTGOMERY AL 36130

160507053039 1 1C01CY1FB11M1
HENRY PRATT CO
A K WILSON
VICE PRESIDENT ENGINEERING
401 SOUTH HIGHLAND AVENUE
AURORA IL 60507

139154142334 1 1C01CY1FB11M1
HINDS COMMUNITY COLLEGE
GEORGE M MCLENDON LIBRARY
GAYLE KEEFE
LIBRARY TECHNICAL ASSISTANT
MAIN ST
RAYMOND MS 39154

149423105367 1 1C01CY1FB11M1
HOPE COLLEGE
VAN WYLEN LIBRARY
DR CAROL JUTH
REFERENCE LIBRARIAN
HOLLAND MI 49423

177001137824 1 1C01CY1FB11M1
HOUSTON LIGHTING & POWER CO
J H GOLDBERG
SR VICE PRESIDENT NUCLEAR
PO BOX 1700
HOUSTON TX 77001

177483141110 1 1C01CY1FB11M1
HOUSTON LIGHTING & POWER CO
SUPPORT LICENSING
MARK A MCBURNETT
MANAGER
PO BOX 289
WADSWORTH TX 77483

122041056038 1 1C01CY1FB11M1
GUNDULA SUNDGREN
G SUNDGREN
MANAGER
5827 COLUMBIA PIKE
SUITE 517
FALLS CHURCH VA 22041

102888053049 1 1C01CY1FB11M1
HAMMEL DAHL INC
DONALD A OUELLETTE
Q A MANAGER
175 POST RD
WARWICK RI 02888

153201053037 1 1C01CY1FB11M1
HARNISCHFEGER CORP
OVERHEAD CRANES
RICHARD A HOLZHAUER
POST OFFICE BOX 310
MP
MILWAUKEE WI 53201

129550104214 1 1C01CY1FB11M1
HARTSVILLE MEMORIAL LIBRARY
NUCLEAR INFORMATION DEPOSITORY
VIRGINIA WARR
LIBRARIAN
220 N 5TH ST
HARTSVILLE SC 29550

105402140097 1 1C01CY1FB11M1
HAYWARD TYLER
ENGINEERING DEPT
LAURIE J DOREY
PO BOX 492
BURLINGTON VT 05402

160507082583 1 1C01CY1FB11M1
HENRY PRATT CO
B R CUMMINS
401 S HIGHLAND AVE
AURORA IL 60507

120007109410 1 1C01CY1FB11M1
HERON, BURCHETTE ET AL
C W REAMER
1025 THOMAS JEFFERSON ST NW
SUITE 700
WASHINGTON DC 20007

1JAPAN091545 1 1C01CY1FB11M1
HIRATA VALVE INDUSTRY CO LTD
KAWASAKI DIV
S TANIMOTO
QA MANAGER
15 HISAMOTO TAKATSU-KU
KAWASAKI KANAGAWA JAPAN

1ENGLA139421 1 1C01CY1FB11M1
HOPKINSONS LTD
BRITANNIA WORKS
R WATSON
PO BOX 827- HD2
DURE HUDDERSFIELD ENGLAND

177483080521 1 1C01CY1FB11M1
HOUSTON LIGHTING & POWER CO
SOUTH TEXAS PROJECT
WARREN H KINSEY
PLANT MANAGER
PO BOX 289
WADSWORTH TX 77483

136302104233 1 1C01CY1FB11M1
HOUSTON-LOVE MEMORIAL LIBRARY
BETTYE FORBUS
DIRECTOR
212 W BURDESHAW ST
BOX 1369
DOTHAN AL 36302

123451106174 1 1C01CY1FB11M1
HP DESIGN & DEVELOPMENT INC
JOSEPH E MASSEY
PRESIDENT
2648 - B OCEAN SHORE AVE
VIRGINIA BEACH VA 23451

195501142319 1 1C01CY1FB11M1
HUMBOLDT COUNTY LIBRARY
HUMBOLDT ROOM LIBRARIAN
636 F STREET
EUREKA CA 95501

123212139781 1 1C01CY1FB11M1
HUNTON & WILLIAMS
W T REVELEY III
ESQUIRE
PO BOX 1535
RICHMOND VA 23212

177704064605 1 1C01CY1FB11M1
IBM CORP
T D GANDY JR
INDUSTRY SPECIALIST
PO BOX 831
BEAUMONT TX 77704

160601104470 1 1C01CY1FB11M1
ILLINOIS ATTORNEY GENERAL OFC
PUBLIC UTILITIES DIV
ROBERT W CUSHING
CHIEF
100 W RANDOLPH 13TH FL
CHICAGO IL 60601

160137137480 1 1C01CY1FB11M1
ILLINOIS DEPT OF NUCLEAR SFTY
ANDREW GULCZYNSKI
800 ROOSEVELT RD - BLDG C
SUITE 200
GLEN ELLYN IL 60137

161727103444 1 1C01CY1FB11M1
ILLINOIS POWER CO
CLINTON POWER STATION
D P HALL
PO BOX 678
V-275
CLINTON IL 61727

161348104234 1 1C01CY1FB11M1
ILLINOIS VALLEY COMM COLLEGE
JACOBS MEMORIAL LIBRARY
EVELYN MOYLE
DOCUMENTS LIBRARIAN
2578 E 350TH ROAD
OGLESBY IL 61348

160069139928 1 1C01CY1FB11M1
IMPELL CORP
LIBRARIAN
300 TRI-STATE INTERNATIONAL
SUITE 400
LINCOLNSHIRE IL 60069

194598105808 1 1C01CY1FB11M1
IMPELL CORP
JEFF ABRAMSON
LEAD SENIOR ENGINEER
350 LENNON LANE
WALNUT CREEK CA 94598

176116137464 1 1C01CY1FB11M1
IMPELL CORP
SYSTEMS ENGINEERING DIV
LEESHA BAKER
6500 WEST FREEWAY
SUITE 400
FORT WORTH TX 76116

130084105871 1 1C01CY1FB11M1
HUB CORP
MARTIN SMITH
PO BOX 125
TUCKER GA 30084

195501138882 1 1C01CY1FB11M1
HUMBOLDT COUNTY LIBRARY
HUMBOLDT ROOM LIBRARIAN
MAGGIE J NYSTROM
636 F ST
EUREKA CA 95501

1AUSTR138714 1 1C01CY1FB11M1
IAEA
DEPT OF NUCL ENERGY & SFTY
DR.MORRIS ROSEN
PO BOX 100
A-1400 VIENNA AUSTRIA

183720110594 1 1C01CY1FB11M1
IDAHO HAZARDOUS MATRLS BUREAU
DIV OF ENV QUALITY
CHERYL KOSHUTA
CHIEF
450 W STATE
BOISE ID 83720

162704109317 1 1C01CY1FB11M1
ILLINOIS DEPT OF NUCLEAR SFTY
ENGINEERING
CHIEF
1035 OUTER PARK DR
4TH FLOOR
SPRINGFIELD IL 62704

162704009000 1 1C01CY1FB11M1
ILLINOIS DEPT OF NUCLEAR SFTY
TERRY LASH
DIRECTOR
1035 OUTER PARK DR
5TH FLR
SPRINGFIELD IL 62704

161727139704 1 1C01CY1FB11M1
ILLINOIS POWER CO
LICENSING & SAFETY
F A SPANGENBERG
MANAGER
PO BOX 678-CLINTON PWR STATION
CLINTON IL 61727

194621091473 1 1C01CY1FB11M1
IMO DELAVAL INC
ENTERPRISE ENGINE DIV
BRUCE C GUNTRUM
ENTERPRISE WAY & 85TH AVE
BOX 2161
OAKLAND CA 94621

111747082337 1 1C01CY1FB11M1
IMPELL CORP
LIBRARY
225 BROAD HOLLOW RD
MELVILLE NY 11747

194583142285 1 1C01CY1FB11M1
IMPELL CORP
CORPORATE OFFICE
R A AYRES
CORPORATE QA MANAGER
PO BOX 5149
SAN RAMON CA 94583

176116141697 1 1C01CY1FB11M1
IMPELL CORP
LESHA BAKER
6500 W FREEWAY
SUITE 400
FORT WORTH TX 76116

194598138026 1 1C01CY1FB11M1
IMPELL CORP
ARTHUR BILLY
PRESIDENT
136 VIA MONTE DR
WALNUT CREEK CA 94598

194583142036 1 1C01CY1FB11M1
IMPELL CORP
B DANIELS
PO BOX 5013
SAN RAMON CA 94583

194598110506 1 1C01CY1FB11M1
IMPELL CORP
WELLS FARGO
350 LENNON LANE
WALNUT CREEK CA 94598

160069139898 1 1C01CY1FB11M1
IMPELL CORP
JANET FORSTER
LIBRARIAN
300 TRI STATE INTERNATIONAL
SUITE 400
LINCOLNSHIRE IL 60069

194598064767 1 1C01CY1FB11M1
IMPELL CORP
TECHNICAL SERVICES DIVISION
C M FRANK
LEAD SENIOR ENGINEER
350 LENNON LANE
WALNUT CREEK CA 94598

194583141264 1 1C01CY1FB11M1
IMPELL CORP
G HAU
PO BOX 5013
SAN RAMON CA 94583

194583141085 1 1C01CY1FB11M1
IMPELL CORP
S MAHINI
LEAD SR ENGINEER
PO BOX 5013
RAN RAMON CA 94583

111747082338 1 1C01CY1FB11M1
IMPELL CORP
STEPHEN MILIOTI
SECTION MANAGER
225 BROAD HOLLOW RD
MELVILLE NY 11747

194598137722 1 1C01CY1FB11M1
IMPELL CORP
A NOMAN
350 LENNON LANE
WALNUT CREEK CA 94598

176116141220 1 1C01CY1FB11M1
IMPELL CORP
PLANT SERVICES DIV
ROBERT L SKIPPER
TECHNICAL SPEC
6500 W FREEWAY
FT WORTH TX 76116

194598137426 1 1C01CY1FB11M1
IMPELL CORP
LYNN WALTER
SENIOR TECH SPECIALIST
350 LENNON LANE
WALNUT CREEK CA 94598

194598107656 1 1C01CY1FB11M1
IMPELL CORP
TONY CHEN
350 LENNON LANE
WALNUT CREEK CA 94598

194598137821 1 1C01CY1FB11M1
IMPELL CORP
S ESFANDIARI
350 LENNON LANE
WALNUT CREEK CA 94598

194598139478 1 1C01CY1FB11M1
IMPELL CORP
J FLYNN
350 LENNON LANE
WALNUT CREEK CA 94598

194598137684 1 1C01CY1FB11M1
IMPELL CORP
V FRANCESCHI
350 LENNON LANE
WALNUT CREEK CA 94598

194583141341 1 1C01CY1FB11M1
IMPELL CORP
LIBRARY
JEANNE HASTINGS
LIBRARIAN
PO 5013
SAN RAMON CA 94583

194598138463 1 1C01CY1FB11M1
IMPELL CORP
L KLEINSORG
350 LENNON LANE
WALNUT CREEK CA 94598

194598138020 1 1C01CY1FB11M1
IMPELL CORP
M MANRIQUE
350 LENNON LANE
WALNUT CREEK CA 94598

194598110513 1 1C01CY1FB11M1
IMPELL CORP
BRUCE MYATT
350 LENNON LANE
WALNUT CREEK CA 94598

194598137711 1 1C01CY1FB11M1
IMPELL CORP
M RATIU
350 LENNON LANE
WALNUT CREEK CA 94598

130092066906 1 1C01CY1FB11M1
IMPELL CORP
D STANCLIFF
LIBRARIAN
333 RESEARCH COURT
NORCROSS GA 30092

194598110514 1 1C01CY1FB11M1
IMPELL CORP
SED
RON WISE
LEAD SENIOR ENGINEER
455 N WIGET LANE
WALNUT CREEK CA 94598

133450104229 1 1C01CY1FB11M1
INDIAN RIVER COMM COLLEGE
CHARLES S MILEY LRNG RES CTR
JIMMIE A NOURSE
ACQUISITIONS LIBRARIAN
3209 VIRGINIA AVE
FT PIERCE FL 33450

143216139680 1 1C01CY1FB11M1
INDIANA MICHIGAN POWER CO
C/O AEPSC
MILTON P ALEXICH
VICE PRESIDENT
1 RIVERSIDE PLAZA
COLUMBUS OH 43215

120879091778 1 1C01CY1FB11M1
INDUSTRIAL QUALITY INC
HAROLD BERGER
PO BOX 2519
GAITHERSBURG MD 20879

108865091550 1 1C01CY1FB11M1
INGERSOLL RAND CO
ENGINEERED PUMP DIVISION
G D BOWEN
QA MANAGER
PO BOX 486
PHILLIPSBURG NJ 08865

180302142339 1 1C01CY1FB11M1
INST NUCLEAR MEDICAL EDUCATION
CHARLES H ROSE
3011 BROADWAY
SUITE # 1
BOULDER CO 80302

1YUGOS092129 1 1C01CY1FB11M1
INSTITUT RUDER BOSKOVIC
PETAR TOMAS
ADMINISTRATOR
BIJENICKA C54
41000 ZAGREB YUGOSLAVI

130339066104 1 1C01CY1FB11M1
INSTITUTE OF NUCLEAR PWR OPER
TECHNICAL LIBRARY
MARY L WATSON
1100 CIRCLE 75 PKWY
SUITE 1500
ATLANTA GA 30339

121045078882 1 1C01CY1FB11M1
INTERMATRIX CORP
FREDERICK B LOBRIN
PRESIDENT
6186 CAMPFIRE ROAD
COLUMBIA MD 21045

122030110535 1 1C01CY1FB11M1
INTL ENERGY ASSOC
JOHN F WALTER
3211 JERMANTOWN RD
SUITE 422
FAIRFAX VA 22030

150319081502 1 1C01CY1FB11M1
IOWA DEPT OF PUBLIC HEALTH
JOHN EURE
ASST TO DIV DIR -ENVIRO HLTH
LUCAS STATE OFFICE BLDG
DES MOINES IA 50319

152406008660 1 1C01CY1FB11M1
IOWA ELECTRIC LIGHT & POWER CO
TONY BROWNING
LICENSING GROUP LEADER
PO BOX 351
CEDAR RAPIDS IA 52406

146206012128 1 1C01CY1FB11M1
INDIANA BOARD OF HEALTH
DR DAVE CUNDIFF
DIRECTOR LOCAL HLTH SERVICES
1330 W MICHIGAN ST
INDIANAPOLIS IN 46206

108650064452 1 1C01CY1FB11M1
INDUSTRIAL ENGINEERING WORKS
C L WORTHINGTON JR
GA/C MANAGER
PO BOX 8008
TRENTON NJ 08650

180150093282 1 1C01CY1FB11M1
INFORMATION HANDLING SERVICES
SHELBY CARTER
15 INVERNESS WAY E
ENGLEWOOD CO 80150

120005090020 1 1C01CY1FB11M1
INSIDE NRC
DAVE AIROZO
WASHINGTON EDITOR
1120 VERMONT AVE NW
SUITE 1200
WASHINGTON DC 20005

1YUGOS092128 1 1C01CY1FB11M1
INSTITUT JOZEF STEFAN
REACTOR ENGINEERING DIVISION
BORUT MAVKO
ADMINISTRATOR
JAMOVA 39
61111 LJUBLJANA YUGOSLAVI

121401136016 1 1C01CY1FB11M1
INSTITUTE FOR RESOURCE MGT
STEVE CARSWELL
SENIOR VP
2666 RIVA ROAD
SUITE 360
ANNAPOLIS MD 21401

1POLAN007288 1 1C01CY1FB11M1
INSTITUTE OF NUCLEAR RESEARCH
REACTOR ENGINEERING DEPT.
A STRUPCZEWSKI
ASST PROF
05-400
SWIERK NEAR WARSAW POLAND

192056040034 1 1C01CY1FB11M1
INTL CONSULTANTS
JAY S IYER
[illegible]20 WAGON WHEEL DRIVE
OCEANSIDE CA 92056

150319064173 1 1C01CY1FB11M1
IOWA DEPT OF HEALTH
BUREAU RADIOLOGICAL HLTH
DONALD A FLATER
CHIEF
LUCAS STATE OFFICE BLDG
DES MOINES IA 50319

152324050533 1 1C01CY1FB11M1
IOWA ELECTRIC LIGHT & POWER CO
DUANE ARNOLD NPS
PLANT MANAGER
3277 DAEC RD
PALO IA 52324

152324141492 1 1C01CY1FB11M1
IOWA ELECTRIC LIGHT & POWER CO
HERB GIORGIO
RADIATION PROTECTION SUPVR
3277 DAEC ROAD
PALO IA 52324

152406140918 1 1C01CY1FB11M1
IOWA ELECTRIC LIGHT & POWER CO
LEE LIU
CHIEF EXECUTIVE
P.O. BOX 351
CEDAR RAPIDS IA 52406

1JAPAN053044 1 1C01CY1FB11M1
ISHIKAWAJIMA HARIMA HEAVY IND
NUCLEAR POWER DIVISION
T MOTOI
1 SHIN-NAKAHARA-CHO
NO 235
ISOGO KU YOKOHAMA JAPAN

117603053048 1 1C01CY1FB11M1
ITT ENGINEERED VALVES
E C BROOME
CONTRACTS MGR
33 CENTERVILLE ROAD
LANCASTER PA 17603

110965104336 1 1C01CY1FB11M1
J R DONLAN INC
JAMES R DONLAN
HEALTH PHYSICIST
PO BOX 261
PEARL RIVER NY 10965

143229137159 1 1C01CY1FB11M1
JACOX ASSOCIATES
JOHN W JACOX
PRESIDENT
PO BOX 29720ST
COLUMBUS OH 43229

120036103276 1 1C01CY1FB11M1
JAPAN ELEC POWER INFO CTR
WASHINGTON OFFICE
YUTAKA HATANO
GENERAL MANAGER
1726 M ST NW #403
WASHINGTON DC 20036

137932126591 1 1C01CY1FB11M1
JBF ASSOCIATES INC
MYRON CASADA
1000 TECHNOLOGY PARK CENTER
KNOXVILLE TN 37932

170160103269 1 1C01CY1FB11M1
JOHNSON & HIGGINS
NUCLEAR ADVISORY GROUP
THEODORE D RUDDOCK
VICE PRESIDENT
PO BOX 60183
NEW ORLEANS LA 70160

120716139197 1 1C01CY1FB11M1
JRA ASSOCIATES
INFORMATION SERVICES
D G WILLIAMS
MANAGER
1407 MARCO DR
MITCHELLVILLE MD 20716

199352107936 1 1C01CY1FB11M1
KAISER ENGINEERS HANFORD
LIBRARIAN
PO BOX 888
RICHLAND WA 99352

194623001007 1 1C01CY1FB11M1
KAISER ENGINEERS INC
ENGINEERING LIBRARY
ELAINE ZACHER
TECHNICAL LIBRARIAN
PO BOX 23210
OAKLAND CA 94623

152808003134 1 1C01CY1FB11M1
IOWA ILLINOIS GAS & ELEC CO
ENERGY SUPPLY & ENGINEERING
STEPHEN E SHELTON
VICE PRESIDENT-ELECTRIC OPERA
PO BOX 4350
DAVENPORT IA 52808

1ISRAE057568 1 1C01CY1FB11M1
ISRAEL ATOMIC ENERGY COM
LICENSING DIVISION
DAN LITAI
ADMINISTRATOR
PO BOX 7061
TEL AVIV 61070 ISRAEL

119126141567 1 1C01CY1FB11M1
J E LONERGAN CO
VALVE DIV
D L BRECHT
QA MANAGER
2525 ORTHODOX ST
PHILADELPHIA PA 19126

121401081073 1 1C01CY1FB11M1
J STEWART BLAND ASSOCIATES
J S BLAND
PRESIDENT
133 DEFENSE HIGHWAY STE 208
ANNAPOLIS MD 21401

101605053060 1 1C01CY1FB11M1
JAMESBURY CORP
QA ENGINEERING
GERALD P MENARD
640 LINCOLN STREET
WORCESTER MA 01605

192121140654 1 1C01CY1FB11M1
JAYCOR
DR.PAUL J MASIELLO
11011 TORREYANA RD
SAN DIEGO CA 92121

160053139487 1 1C01CY1FB11M1
JOHN CRANE INC
STEVEN LEMBERGER
SENIOR DESIGN ENGINEER
6400 WEST OAKTON ST
MORTON GROVE IL 60053

154241104215 1 1C01CY1FB11M1
JOSEPH MANN LIBRARY
ADULT SERVICES
LINDA TERO
ADULT SERVICES ASSISTANT
1516 16TH ST
TWO RIVERS WI 54241

103801138699 1 1C01CY1FB11M1
JVS CORP
TECHNICAL SERVICES
BRADFORD H ROBINSON
MANAGER
49 MARKET ST - #2
PORTSMOUTH NH 03801

194619139955 1 1C01CY1FB11M1
KAISER ENGINEERS INC
PAULA TRINOSKEY
5670 WEAVER PLACE
OAKLAND CA 94619

177478139358 1 1C01CY1FB11M1
KALSI ENGINEERING INC
DR. M. S KALSI
745 PARK TWO DR
SUGAR LAND TX 77478

120036032157 1 1C01CY1FB11M1
KANSAI ELECTRIC POWER CO INC
MANAGER
1100 17TH ST NW
SUITE 500
WASHINGTON DC 20036

166839080574 1 1C01CY1FB11M1
KANSAS GAS & ELEC CO
WOLF CREEK 1 NPS
PLANT MANAGER
BURLINGTON KS 66839

160049091566 1 1C01CY1FB11M1
KEMPER GROUP
LCE/SISS
D L TEVIS
RT 22
B-8
LONG GROVE IL 60049

115222064450 1 1C01CY1FB11M1
KEROTEST MANUFACTURING CORP
J BERARDUCCI
QA MANAGER
2525 LIBERTY AVE
PITTSBURGH PA 15222

120036139772 1 1C01CY1FB11M1
KIRKPATRICK LOCKHART ET AL
HERBERT H BROWN
ESQUIRE
1800 M ST NW SOUTH LOBBY
STE900
WASHINGTON DC 20036

1WGERM053057 1 1C01CY1FB11M1
KLOCKNER-WERK AG
GEORGSMARIENWERKE
W AUSTEL
Q A MANAGER
PO BOX 27 80
D 4500 OSNABRUCK WGERMANY

120006110938 1 1C01CY1FB11M1
KMC INC
ERYK DLUZNIEWSKI
1747 PENN AVE NW
SUITE 1050
WASHINGTON DC 20006

110012106503 1 1C01CY1FB11M1
KOMANOFF ENERGY ASSOCIATES
270 LAFAYETTE ST
SUITE 400
NEW YORK NY 10012

146809141977 1 1C01CY1FB11M1
KUNKLE INDUSTRIES INC
LONERGAN VALVE DIVISION
L E BENSON, JR.
QA MANAGER
8222 BLUFFTON RD
FORT WAYNE IN 46809

108731091409 1 1C01CY1FB11M1
LACEY TOWNSHIP
MUNICIPALITY
818 LACEY RD
FORKED RIVER NJ 08731

102828141023 1 1C01CY1FB11M1
LAKE ENGINEERING CO
D P BROWN
PRESIDENT
PO BOX 296
GREENVILLE RI 02828

166612141490 1 1C01CY1FB11M1
KANSAS DEPT OF HEALTH & ENVIRN
BUR OF ENVIR HLTH SVC RAD PRG
GERALD W ALLEN
PUBLIC HEALTH PHYSICIST
109 SW 9TH ST
TOPEKA KS 66612

132773139307 1 1C01CY1FB11M1
KEMCO INDUSTRIES INC
RICK WOLCOTT
MANAGER-QUALITY CONTROL
5481 S BRYANT AVE
SANFORD FL 32773

106483091719 1 1C01CY1FB11M1
KERITE CO
J K RICHARDS
QA MANAGER
49 DAY ST
SEYMOUR CT 06483

113426139271 1 1C01CY1FB11M1
KESS ELECTRIC
KESS TANI
ENG CONSULTANT
COUNTY RT 2 PO BOX 197
ORWELL NY 13426

120036026915 1 1C01CY1FB11M1
KIRKPATRICK LOCKHART ET AL
LAWRENCE C LANPHER
1800 M ST NW SOUTH LOBBY
9TH FL
WASHINGTON DC 20036

1WGERM091568 1 1C01CY1FB11M1
KLOCKNER-WERK AG
GEORGSMARIENWERKE
F BEIER
DIRECTOR GENERAL
POSTFACH 27 80
D4500 OSNABRUCK WGERMANY

120006137223 1 1C01CY1FB11M1
KMC INC
MARY J PAYTON
OFFICE MANAGER
1747 PENN AVE NW
SUITE 1050
WASHINGTON DC 20006

1KOREA093185 1 1C01CY1FB11M1
KOREA ADVANCED ENERGY RES INST
NUCLEAR SAFETY CENTER
YONG-JO KIM
HEAD, SAFETY INFORMATION DEPT
PO BOX 7 DAEDUK-DANJI
CHOONG-NAM KOREA

174477103306 1 1C01CY1FB11M1
LABARGE PIPE & STEEL CO
R & W MILL
F D BREWER
DIRECTOR OF QUALITY ASSURANCE
PO BOX 355
WAGONER OK 74477

154601103014 1 1C01CY1FB11M1
LACROSSE PUBLIC LIBRARY
NOREEN FISH
REFERENCE LIBRARIAN
800 MAIN ST
LACROSSE WI 54601

198020142314 1 1C01CY1FB11M1
LANDAU ASSOCIATES INC
DALE A STIRLING
ENVIRONMENTAL HISTORIAN
PO BOX 1029
EDMONDS WA 98020

194550079656 1 1C01CY1FB11M1
LAWRENCE LIVERMORE LABORATORY
NUCLEAR SYSTEMS SAFETY PROG
KAREN L ANDERSON
PO BOX 808
L-198
LIVERMORE CA 94550

120036065264 1 1C01CY1FB11M1
LEBOEUF LAMB LEIBY & MACRAE
HARRY H VOIGT
1333 NEW HAMPSHIRE AVE NW
SUITE 1100
WASHINGTON DC 20036

122901091644 1 1C01CY1FB11M1
LIEBIG INTERNATIONAL INC
1545 AVON ST EXTENDED
CHARLOTTESVILLE VA 22901

124506064449 1 1C01CY1FB11M1
LIMITORQUE CORP
WM J MILUSZUSKY
QC MANAGER
5114 WOODALL RD POB-11318
LYNCHBURG VA 24506

124506106164 1 1C01CY1FB11M1
LIMITORQUE CORP
DANIEL S WARSING
TECH MANAGER
P O BOX 11318
LYNCHBURG VA 24506

109201110422 1 1C01CY1FB11M1
LN TECHNOLGIES CORP
QUALITY ASSURANCE
JAMES L MOONEY
QA MANAGER
1501 KEY RD
COLUMBIA SC 29201

103061142094 1 1C01CY1FB11M1
LOCKHEED & SANDERS
NEN PRODUCTS
KERRY BENNERT
DWS BOX 0868
NH01-457
NASHUA NH 03061

111792105594 1 1C01CY1FB11M1
LONG ISLAND LIGHTING CO
SHOREHAM NPS
L F BRITT
MANAGER NUC LIC & REG AFFAIRS
P O BOX 618
WADING RIVER NY 11792

111801106330 1 1C01CY1FB11M1
LONG ISLAND LIGHTING CO
LEGAL DEPT
JEFFREY L FUTTER
175 E OLD COUNTRY RD
HICKSVILLE NY 11801

111792103475 1 1C01CY1FB11M1
LONG ISLAND LIGHTING CO
NUCLEAR QUALITY ASSURANCE
J A NOTARO
MANAGER
PO BOX 618 NORTH COUNTRY RD
WADING RIVER NY 11792

170898092181 1 1C01CY1FB11M1
LOUISIANA DEPT OF ENV QUALITY
NUCLEAR ENERGY DIVISION
WILLIAM H SPELL
ADMINISTRATOR
PO BOX 14690
BATON ROUGE LA 70898

120036137217 1 1C01CY1FB11M1
LEBOEUF LAMB LEIBY & MACRAE
LEONARD TROSTEN
1333 NEW HAMPSHIRE AVE NW
WASHINGTON DC 20036

133617110430 1 1C01CY1FB11M1
LESLIE CO
D H DORFER
QUALITY SYSTEMS ENGINEER
12501 TELECOM DR
TAMPA FL 33617

119464139766 1 1C01CY1FB11M1
LIMERICK ECOLOGY ACTION
PO BOX 761
POTTSTOWN PA 19464

124506038042 1 1C01CY1FB11M1
LIMITORQUE CORP
R D SEGEN
QUALITY ASSURANCE MGR
PO BOX 11318
LYNCHBURG VA 24506

124502091577 1 1C01CY1FB11M1
LIMITORQUE CORP
I E WILKINSON
VICE PRESIDENT-ENGINEERING
5114 WOODALL RD POB-11318
LYNCHBURG VA 24502

120854066587 1 1C01CY1FB11M1
LNR ASSOCIATES
LOUIS N RIB
8605 GRIMSBY COURT
POTOMAC MD 20854

110520111051 1 1C01CY1FB11M1
LOM-TECH INC
LINDA D LUND
PRESIDENT
PO BOX 202
RT 9A554
CROTON-ON-HUDSON NY 10520

111792064623 1 1C01CY1FB11M1
LONG ISLAND LIGHTING CO
SHOREHAM NUCLEAR POWER STA
B E EVANS
RECORDS MANAGER
PO BOX 618
WADING RIVER NY 11792

111792100820 1 1C01CY1FB11M1
LONG ISLAND LIGHTING CO
SHOREHAM NPS
JOHN D LEONARD
VICE PRESIDENT-NUCLEAR OPERS
PO BOX 618
WADING RIVER NY 11792

111792091236 1 1C01CY1FB11M1
LONG ISLAND LIGHTING CO
SHOREHAM NPS
J A NOTARO
PLANT MANAGER
PO BOX 628
WADING RIVER NY 11792

170066080583 1 1C01CY1FB11M1
LOUISIANA POWER & LIGHT CO
WATERFORD 3 NPS
PLANT MANAGER
PO BOX 3
KILLONA LA 70066

170112139166 1 1C01CY1FB11M1
LOUISIANA POWER & LIGHT CO
NUCLEAR OPERATIONS
JERROLD G DEWEASE
317 BARONNE ST
N-81
NEW ORLEANS LA 70112

170066103325 1 1C01CY1FB11M1
LOUISIANA POWER & LIGHT CO
WATERFORD 3
J J ZARRITSKI
NUCLEAR Q A MANAGER
PO BOX B
KILLONA LA 70066

180304141181 1 1C01CY1FB11M1
M & K ASSOCIATES, INC
MICHAEL H MONTGOMERY
3845 NORWOOD CT
BOULDER CO 80304

160515091580 1 1C01CY1FB11M1
MAGNETROL INTERNATIONAL INC
C QUEYQUEP
PROJECT ENGINEER
5300 BELMONT RD
DOWNERS GROVE IL 60515

104333109494 1 1C01CY1FB11M1
MAINE DEPT OF HUMAN SERVICES
DIVISION OF HEALTH ENGINEERING
DONALD C HOXIE
DIRECTOR
STATE HOUSE STATION #10
AUGUSTA ME 04333

104336008719 1 1C01CY1FB11M1
MAINE YANKEE ATOMIC POWER CO
CHARLIE D FRIZZLE
ASST CHAIRMAN OF THE BOARD
83 EDISON DR
AUGUSTA ME 04336

110471105869 1 1C01CY1FB11M1
MANHATTAN COLLEGE
MECHANICAL ENGINEERING DEPT
ROBERT E HERLIN
REACTOR ADMINISTRATOR
MANHATTAN COLLEGE
BRONX NY 10471

1WGERM053063 1 1C01CY1FB11M1
MANNESMANN ANLAGENBAU AG
RQ
E BRUEHL
DIRECTOR
PO BOX 300307
4000 DUESSELDORF FRG WGERMANY

121224140990 1 1C01CY1FB11M1
MARYLAND DEPT OF ENVIRONMENT
TESH
LAWRENCE M WARD
DEPUTY ASSISTANT SECRETARY
2500 BROENING HWY
BALTIMORE MD 21224

102200208029 1 1C01CY1FB11M1
MASSACHUSETTS DEPT PUB UTILTS
CHAIR
100 CAMBRIDGE ST
BOSTON MA 02202

102101066215 1 1C01CY1FB11M1
MATERIAL HANDLING EQUIPMENT
STEVEN PARKHURST
PO BOX 118
BOSTON MA 02101

170066059184 1 1C01CY1FB11M1
LOUISIANA POWER & LIGHT CO
WATERFORD 3 SES
J P MCGAHA
PLANT MANAGER-NUCLEAR
PO BOX B
KILLONA LA 70066

120852093914 1 1C01CY1FB11M1
LOWENBERG ASSOCIATES
HOMER LOWENBERG
10901 ROSEMONT DR
ROCKVILLE MD 20852

160606106149 1 1C01CY1FB11M1
M & M PROTECTION CONSULTANTS
BOILER & MACHINERY CONSULTANT
R D HUMPHREYS
222 SOUTH RIVERSIDE PLAZA
CHICAGO IL 60606

160515137224 1 1C01CY1FB11M1
MAGNETROL INTERNATIONAL INC
R T STIBBE
QA ENGINEER
5300 BELMONT RD
DOWNERS GROVE IL 60515

104336103590 1 1C01CY1FB11M1
MAINE YANKEE ATOMIC POWER CO
CHARLES D FRIZZLE
PRESIDENT
83 EDISON DR
AUGUSTA ME 04336

104336104197 1 1C01CY1FB11M1
MAINE YANKEE ATOMIC POWER CO
NUC ENGINEERING & LICENSING
DOUGLAS G WHITTIER
MGR NUC ENG & LICENSING
83 EDISON DR
AUGUSTA ME 04336

1WGERM031581 1 1C01CY1FB11M1
MANNESMANN ANLAGENBAU AG
ZENTRALE QUALITAETSSTELLE
4000 DUESSELDORF 30
THEODORSTRASSE 90 WGERMANY

195822138938 1 1C01CY1FB11M1
MARTIN LUTHER KING REG LIB
BESS CHEN
7340 24TH ST BYPASS
SACRAMENTO CA 95822

101060106338 1 1C01CY1FB11M1
MASSACHUSETTS DEPT OF PUB HLTH
WESTERN REGIONAL HEALTH OFFICE
WILLIAM J BELL
23 SERVICE CENTER
NORTHAMPTON MA 01060

100139079406 1 1C01CY1FB11M1
MASSACHUSETTS INST OF TECH
NUCLEAR REACTOR
JOHN BERNARD
138 ALBANY ST
NW12
CAMBRIDGE MA 02139

149085102981 1 1C01CY1FB11M1
MAUDE PRESTON PALENSKE MEM LIB
BEA RODGERS
LIBRARY ASSISTANT
500 MARKET ST
ST JOSEPH MI 49085

121224139709 1 1C01CY1FB11M1
MD DEPT OF ENVIRONMENT
RADIATION CONTROL
ROLAND G FLETCHER
DIRECTOR
2500 BROENING HWY
BALTIMORE MD 21224

107652141342 1 1C01CY1FB11M1
MEDI PHYSICS INC
REGULATORY AFFAIRS
JANET E REUTHER
140 E RIDGEWOOD AVE
SUITE 806
PARAMUS NJ 07652

193021104264 1 1C01CY1FB11M1
METAL BELLOWS CORP
GLENN CALVIN
QA MANAGER
200 SCIENCE DRIVE PO BOX 8010
MOORPARK CA 93021

195125031693 1 1C01CY1FB11M1
MHB TECHNICAL ASSOC
TECHNICAL CONSULTANTS
1723 HAMILTON AVE
SUITE K
SAN JOSE CA 95125

148909002467 1 1C01CY1FB11M1
MICHIGAN DEPT OF PUBLIC HEALTH
BUREAU OF ENV & OCC HLTH
LEE JAGER
3423 N LOGAN PO BOX 30195
LANSING MI 48909

155401102992 1 1C01CY1FB11M1
MINNEAPOLIS PUBLIC LIBRARY
TECHNOLOGY & SCIENCE DEPT
BETTY E STENNES
LIBRARY AIDE
300 NICOLLET MALL
MINNEAPOLIS MN 55401

155440079447 1 1C01CY1FB11M1
MINNESOTA DEPT OF HEALTH
ENVIRONMENTAL HEALTH DIVISION
RAYMOND THRON
717 DELAWARE STREET SE
MINNEAPOLIS MN 55440

1KOREA138715 1 1C01CY1FB11M1
MINSTRY OF SCIENCE & TECH
NUCLEAR COOPERATION DIV
YOU-HYUN MOON
ADMINSTRATOR
NUCLEAR SFTY & COOP OFFICE
SEOUL 100 KOREA

165102109446 1 1C01CY1FB11M1
MISSOURI DEPT OF NAT RESOURCES
RONALD A KUCERA
DEPUTY DIRECTOR
PO BOX 176
JEFFERSON CITY MO 65102

144114135743 1 1C01CY1FB11M1
MK-FERGUSON CO
CORPORATE
DORSEL C BADEN
DIRECTOR QA/QC
ONE ERIEVIEW PLZ
CLEVELAND OH 44114

148161104231 1 1C01CY1FB11M1
MONROE COUNTY LIBRARY SYSTEM
ELLIS REFERENCE & INFO CENTER
CARL KATAFIASZ
REFERENCE/GOVT DOCS COORD
3700 S CUSTER RD
MONROE MI 48161

160007053065 1 1C01CY1FB11M1
MEA INC
T W LASIEWICZ
PRESIDENT
2600 AMERICAN LANE
ELK GROVE VILLAGE IL 60007

102159142317 1 1C01CY1FB11M1
MERCURY CO OF NORWOOD INC
FRED N ZINKEVICH
CORP QA MANAGER
PO BOX 9117
NEWTON CENTRE MA 02159

155404139947 1 1C01CY1FB11M1
METROPOLITAN MEDICAL CENTER
NUCLEAR MEDICINE DEPT
RICHARD HANSON
CNMT
900 S. 8TH ST
MINNEAPOLIS MN 55404

148909140094 1 1C01CY1FB11M1
MICHIGAN DEPT OF LABOR
BOILER DIVISION
ROBERT J ABEN
ASST CHIEF
PO BOX 30015
LANSING MI 48909

1NETHE092092 1 1C01CY1FB11M1
MINISTRY SOCIAL AFFAIRS & EMPL
NUCLEAR DEPT
J VERSTEEG
ADMINISTRATOR
PO BOX 69
2270 MA VOORBURG NETHERLAN

155440012008 1 1C01CY1FB11M1
MINNESOTA DEPT OF HEALTH
ENVIRONMENTAL HEALTH
ALICE D HENNIGAN
CHIEF-SECTION OF RAD CONTROL
717 DELAWARE ST SE PO BOX 9441
MINNEAPOLIS MN 55440

155155137131 1 1C01CY1FB11M1
MINNESOTA POLLUTION CONT AGCY
JOHN FERMAN
NUCLEAR ENGINEER
520 LAFAYETTE RD
ST PAUL MN 55155

139215137432 1 1C01CY1FB11M1
MISSISSIPPI BOARD OF HEALTH
DIV OF RADIOLOGICAL HEALTH
EDDIE S FUENTE
DIRECTOR
PO BOX 1700
JACKSON MS 39215

165102031055 1 1C01CY1FB11M1
MISSOURI PUBLIC SERVICE COM
UTILITY DIVISION
MANAGER ELECTRIC DEPT
PO BOX 360
JEFFERSON CITY MO 65102

108540138051 1 1C01CY1FB11M1
MOBIL RESEARCH & DVLOP CORP
ENGINEERING INFORMATION CTR
JOHN P ALTIERI
PO BOX 1026
PRINCETON NJ 08540

159620005488 1 1C01CY1FB11M1
MONTANA DEPT OF HLTH & ENV SCI
ENVIRONMENTAL SCIENCES DIV
LARRY LLOYD
ADMINISTRATOR
COGSWELL BLDG ROOM A113
HELENA MT 59620

150450104203 1 1C01CY1FB11M1
MORRIS AREA PUBLIC LIB DIST
DEBORAH TROTTER
REFERENCE ASSISTANT
604 LIBERTY ST
MORRIS IL 60450

127801091597 1 1C01CY1FB11M1
MORRISON KNUDSEN CO INC
POWER SYSTEMS DIV
M V MITCHELL
DIV QA MANAGER
101 GELO RD
ROCKY MOUNT NC 27801

130144138658 1 1C01CY1FB11M1
MOVATS INC
T NUTTALL
200 CHASTAIN CENTER BLVD #250
KENNESAW GA 30144

175237093017 1 1C01CY1FB11M1
MULTI-AMP SERVICES
JOHN J LAPICOLA
VICE PRESIDENT & GENERAL MGR
4271 BRONZE WAY
DALLAS TX 75237

130328024935 1 1C01CY1FB11M1
MUNICIPAL ELECTRIC AUTH OF GA
THOMAS W LORIA
MGR OF GENERATION PLNG
1470 RIVEREDGE PKWY
ATLANTA GA 30328

127626110058 1 1C01CY1FB11M1
N CAROLINA UTILITIES COM
PUB STAFF
ROBERT P GRUBER
EXECUTIVE DIRECTOR
PO BOX 29520
RALEIGH NC 27626

174465141940 1 1C01CY1FB11M1
NACE
EXECUTIVE DIRECTOR
P.O. BOX 1671
TAHLEQUAH OK 74465

144060103579 1 1C01CY1FB11M1
NAMCO CONTROLS
J R BENDOKAITIS
SR PROJECT ENGINEER
8303 TYLER BLVD
MENTOR OH 44060

144135107956 1 1C01CY1FB11M1
NASA LEWIS RESEARCH CENTER
NEAL T SAUNDERS
DIRECTOR OF AERONAUTICS
21000 BROOKPARK RD
MS 3-8
CLEVELAND OH 44135

143228065206 1 1C01CY1FB11M1
NATIONAL BOARD OF BOILER INSP
MICHAEL F SULLIVAN
DIRECTOR OF INSPECTIONS
1055 CRUPPER AVE
COLUMBUS OH 43229

1ENGLA139420 1 1C01CY1FB11M1
NATIONAL NUCLEAR CORP
PWR SYSTEMS DEPT
A HILL
KNUTSFORD
BOOTHS HALL, CHELFORD RD
CHESHIRE WA16 8QG ENGLAND

127802106383 1 1C01CY1FB11M1
MORRISON KNUDSEN CO INC
POWER SYSTEMS DIV
HARRY W FALTER
PRINCIPAL ENGINEER
PO BOX 1928
ROCKY MOUNT NC 27802

111747106683 1 1C01CY1FB11M1
MOS CONSULTING
MARKETING
SONNY KASTURI
VICE PRESIDENT
25 PIERMONT DR
MELVILLE NY 11747

120036008006 1 1C01CY1FB11M1
MPR ASSOCIATES INC
TECHNICAL LIBRARY
A P MCNAMARA
1050 CONNECTICUT AVE NW
SUITE 400
WASHINGTON DC 20036

148076067182 1 1C01CY1FB11M1
MULTIPLE DYNAMICS CORP
FRANK E GREGOR
PRESIDENT
29200 SOUTHFIELD RD
SUITE 103
SOUTHFIELD MI 48076

127603109535 1 1C01CY1FB11M1
N CAROLINA DEPT OF HUM RES
FACILITY SERVICES DIVISION
DAYNE H BROWN
CHIEF-RADIATN PROTECTION SECT
701 BARBOUR DR
RALEIGH NC 27603

158502141551 1 1C01CY1FB11M1
N DAKOTA DEPT OF HEALTH
DIV OF ENVIRONMNTL ENGINEERING
DANA MOUNT
BOX 5520
RM 304
BISMARCK ND 58502

174465141517 1 1C01CY1FB11M1
NACE
JESSIE DEERINWATER
EXECUTIVE DIRECTOR
POB 1671
VIAN OK 74465

128658053729 1 1C01CY1FB11M1
NAMCO CONTROLS
B R PETTREY
MANAGER-PROD & MFG ENGR
1300 BORRIS RD
NEWTON NC 28658

137220065224 1 1C01CY1FB11M1
NATIONAL BOARD OF BOILER INSP
C W ALLISON
613 ROCHELLE DR
NASHVILLE TN 37220

1MEXIC107302 1 1C01CY1FB11M1
NATIONAL NUC SFTY & SFGDS COM
GERENTE DE TEC PEG Y SER
DR.SERGIO WALLER MEJIA
ADMINISTRATOR
INSURGENTES SUR 1776
01030 MEXICO DF MEXICO

1CHINA093293 1 1C01CY1FB11M1
NATIONAL NUCLEAR SAFETY ADM
ZHONG WANLI
DEPUTY CHIEF ENGR
54 SANLIHE RD
BEIJING CHINA

1ENGLA141845 1 1C01CY1FB11M1
NATIONAL RADIOLOGICAL PROT BD
HEALTH PHYSICS
M C O'RIORDAN
NEWS EDITOR
CHILTON,DIDCOT OX11-0RQ
OXON ENGLAND

123531142312 1 1C01CY1FB11M1
NAVAL SEA SYSTEMS COMMAND
OFFFICER IN CHARGE
DETACHMENT RASO
YORKTOWN VA 23691

15850900430C 1 1C01CY1FB11M1
NEBRASKA DEPT OF HEALTH
DIV OF RADIOLOGICAL HEALTH
HAROLD BORCHERT
301 CENTENNIAL MALL SOUTH
BOX 95007
LINCOLN NE 68509

168601003174 1 1C01CY1FB11M1
NEBRASKA PUBLIC POWER DISTRICT
NUCLEAR SUPPORT
GEORGE A TREVORS
DIVISION MANAGER
PO BOX 499
COLUMBUS NE 68601

144112108155 1 1C01CY1FB11M1
NEI REEBLES-ELECT.PRODUCTS INC
EQUIPMENT QUALIFICATION
CHARLES MOOSBRUGGER
ENG. SPEC.
17045 EUCLID AVENUE
CLEVELAND OH 44112

120842103405 1 1C01CY1FB11M1
NEUTRON PRODUCTS INC
J A RANSOHOFF
PRESIDENT
22301 MT EPHRAIM RD
PO BOX 68
DICKERSON MD 20842

189710093373 1 1C01CY1FB11M1
NEVADA OFFICE OF GOVERNOR
NUCLEAR WASTE PROJECT OFFICE
R LOUX
1802 N CARSON ST CAP COMPLEX
SUITE 252
CARSON CITY NV 89710

103301081147 1 1C01CY1FB11M1
NEW HAMPSHIRE RAD HLTH PROGRAM
DIV OF PUBLIC HEALTH SERVICE
DIANE E TEFFT
ADMINISTRATION
HEALTH & WELFARE BLDG HAZEN DR
CONCORD NH 03301

103874080525 1 1C01CY1FB11M1
NEW HAMPSHIRE YANKEE
TRAINING CENTER
PETER RICHARDSON
PO BOX 300
SEABROOK NH 03874

112233107385 1 1C01CY1FB11M1
NEW YORK DEPT OF ENVIRON CONSV
HAZARDOUS SUBSTANCES REGUL
DR PAUL J MERGES
ROOM 510, BUREAU OF RADIATION
50 WOLF RD
ALBANY NY 12237

111201137230 1 1C01CY1FB11M1
NEW YORK DEPT OF LABOR
RADIOLOGICAL HEALTH UNIT
FRANCIS J BRADLEY,PHD
PRINCIPAL RADIOPHYSICIST
1 MAIN STREET, ROOM 813
BROOKLYN NY 11201

10DENMA056989 1 1C01CY1FB11M1
NATL INST RADIATION HYGIENE
DNAEP
L HANNIBAL
ADMINISTRATOR
FREDERIKSSUNDSVEJ 378
2700 BROENSHOEJ DENMARK

127626109514 1 1C01CY1FB11M1
NCUC-PUBLIC STAFF
ROBERT P GRUBER
EXECUTIVE DIRECTOR
PO BOX 29520
RALEIGH NC 27626

168321093190 1 1C01CY1FB11M1
NEBRASKA PUBLIC POWER DISTRICT
COOPER NUCLEAR STATION
GUY R HORN
DIVISION MGR OF NUCLEAR OPERS
PO BOX 98
BROWNVILLE NE 68321

168601139835 1 1C01CY1FB11M1
NEBRASKA PUBLIC POWER DISTRICT
G D WATSON
GENERAL COUNSEL
PO BOX 499
COLUMBUS NE 68601

120842094126 1 1C01CY1FB11M1
NEUTRON PRODUCTS INC
WAYNE J COSTLEY
VICE PRESIDENT
22301 MT EPHRAIM RD
BOX 68
DICKERSON MD 20842

189710138055 1 1C01CY1FB11M1
NEVADA DEPT OF HUMAN RESOURCES
RADIOLOGICAL HEALTH SECTION
STANLEY MARSHALL
SUPERVISOR
505 EAST KING ST
CARSON CITY NV 89710

1C1NAD053376 1 1C01CY1FB11M1
NEW BRUNSWICK ELECTRIC PWR COM
POINT LEPREAU G S
ROBERT T MCGREGOR
PO BOX 10
LEPREAU NB E0G 2H0 CANADA

103874064760 1 1C01CY1FB11M1
NEW HAMPSHIRE YANKEE
RMD ARCHIVAL
D R GLASS
PO BOX 300 SEABROOK STATION
02-06
SEABROOK NH 03874

187503142143 1 1C01CY1FB11M1
NEW MEXICO ENVIRON IMPROV DIV
HLTH & ENV DEPT ENV IMP DIV
BENITO J GARCIA
BUREAU CHIEF
1190 ST FRANCIS DR
SANTA FE NM 87503

112203138171 1 1C01CY1FB11M1
NEW YORK DEPT OF HEALTH
ENV RADIATION PROTECTION
KARIM RIMAWI
TWO UNIVERSITY PLZ
RM 375
ALBANY NY 12203

112223059613 1 1C01CY1FB11M1
NEW YORK ENERGY OFFICE
WILLIAM DAVIS
DEPUTY COMMISSIONER
EMPIRE STATE PLAZA
10TH FLOOR
ALBANY NY 12223

112223010637 5 1C01CY1FB11M1
NEW YORK ERDA
WEST VALLEY PROGRAM
T K DEBOER
DIRECTOR
2 ROCKEFELLER PLAZA
ALBANY NY 12223

110511080469 1 1C01CY1FB11M1
NEW YORK POWER AUTHORITY
INDIAN POINT 3 NPS
PLANT MANAGER
PO BOX 215
BUCHANAN NY 10511

113093139745 1 1C01CY1FB11M1
NEW YORK POWER AUTHORITY
NINE MILE PT NUCLEAR STATION
JAMES A FITZ-ATRICK NP
GENERAL SUPT
PO BOX 41
LYCOMING NY 13093

110601139741 1 1C01CY1FB11M1
NEW YORK POWER AUTHORITY
LEON GUADUIL
DIRECTOR-PROJECT ENGINEERING
123 MAIN ST
WHITE PLAINS NY 10601

110019140375 1 1C01CY1FB11M1
NEW YORK POWER AUTHORITY
APPRAISAL & COMPLIANCE SERVICE
A KLAUSMANN
SENIOR VICE PRESIDENT
1633 BRODWAY
NEW YORK NY 10019

110601001229 1 1C01CY1FB11M1
NEW YORK POWER AUTHORITY
GEORGE M WILVERDING
CHAIRMAN-SFTY REVIEW COMMITTEE
123 MAIN ST
WHITE PLAINS NY 10601

112223081572 1 1C01CY1FB11M1
NEW YORK PUBLIC SERVICE COM
POWER DIVISION
DIRECTOR
3 EMPIRE STATE PLAZA
ALBANY NY 12223

112223142209 1 1C01CY1FB11M1
NEW YORK STATE ENERGY OFFICE
BUREAU OF NUCLEAR OPERATION
DONNA ROSS
ENERGY PLANNER
2 ROCKEFELLER PLAZA-BLDG 2
ALBANY NY 12223

120036109888 1 1C01CY1FB11M1
NEWMAN & HOLTZINGER, P.C.
KEVIN P GALLEN
1615 L ST NW
WASHINGTON DC 20036

103301141932 1 1C01CY1FB11M1
NH OFC OF EMERGENCY MGMT
GEORGE L IVERSON
DIRECTOR
107 PLEASANT ST
CONCORD NH 03301

113093080487 1 1C01CY1FB11M1
NIAGARA MOHAWK POWER CORP
NINE MILE POINT 1 NPS
PLANT MANAGER
PO BOX 32
LYCOMING NY 13093

113093080540 1 1C01CY1FB11M1
NEW YORK POWER AUTHORITY
FITZPATRICK NPS
PLANT MANAGER
LYCOMING NY 13093

110601062555 1 1C01CY1FB11M1
NEW YORK POWER AUTHORITY
NUCLEAR GENERATION
JOHN C BRONS
EXECUTIVE VICE PRESIDENT
123 MAIN ST
WHITE PLAINS NY 10601

110019139738 1 1C01CY1FB11M1
NEW YORK POWER AUTHORITY
GERALD C GOLDSTEIN
ASSISTANT GENERAL COUNSEL
1633 BROADWAY
NEW YORK NY 10019

110511080920 1 1C01CY1FB11M1
NEW YORK POWER AUTHORITY
INDIAN POINT 3 NPS
D HALAMA
QA SUPERINTENDENT
PO BOX 215
BUCHANAN NY 10511

110511079439 1 1C01CY1FB11M1
NEW YORK POWER AUTHORITY
INDIAN POINT 3 NUC PWR PLANT
MICHAEL F BECKHAM
ASST TO RESIDENT MANAGER
PO BOX 215
BUCHANAN NY 10511

113093064674 1 1C01CY1FB11M1
NEW YORK POWER AUTHORITY
JAMES A FITZPATRICK NUC PWR PL
E L ZUFELT
DRAFTING SUPERVISOR
PO BOX 41
LYCOMING NY 13093

112223105874 1 1C01CY1FB11M1
NEW YORK PUBLIC SERVICE COM
NINE MILE 2 PROJECT
MATT CINADR
PROJECT SUPERVISOR
3 EMPIRE STATE PLAZA
ALBANY NY 12223

120036139771 1 1C01CY1FB11M1
NEWMAN & HOLTZINGER
JACK R NEWMAN
1615 L ST NW
WASHINGTON DC 20036

123606141561 1 1C01CY1FB11M1
NEWPORT NEWS INDUSTRIAL CORP
T E BOND
DIRECTOR OF ENGINEERING
700 THIMBLE SHOALS BLVD
STE113
NEWPORT NEWS VA 23606

148154142060 1 1C01CY1FB11M1
NHK SPRING CO LTD
USA LIAISON OFFICE
TOSHIO KUWABARA
13961 FARMINGTON ROAD
SUITE 1900
LIVONIA MI 48154

113093064586 1 1C01CY1FB11M1
NIAGARA MOHAWK POWER CORP
D H BALDUZZI
SUPT RECORDS MGMT NUCLEAR
PO BOX 32
LYCOMING NY 13093

113093080942 1 1C01CY1FB11M1
NIAGARA MOHAWK POWER CORP
NMPC QA
C G BECKHAM
MGR NUCLEAR QA OPS
PO BOX 63
LYCOMING NY 13093

113212126600 1 1C01CY1FB11M1
NIAGARA MOHAWK POWER CORP
L BURKHARDT III
EXECUTIVE VICE PRESIDENT
301 PLAINFIELD RD
SYRACUSE NY 13212

113093103052 1 1C01CY1FB11M1
NIAGARA MOHAWK POWER CORP
TECHNICAL LIBRARY
DARLENE MURNEY
PO BOX 32
LYCOMING NY 13093

113093073363 1 1C01CY1FB11M1
NIAGARA MOHAWK POWER CORP
NUCLEAR GENERATION
JAMES L WILLIS
GENERAL SUPERINTENDENT
PO BOX 32
LYCOMING NY 13093

113202110377 1 1C01CY1FB11M1
NIAGARA MOHAWK POWER CORP
GARY D WILSON ESQ
SENIOR ATTORNEY
300 ERIE BLVD WEST
SYRACUSE NY 13202

120874137928 1 1C01CY1FB11M1
NUS INC
NORMAN J GERSTEIN
PRESIDENT
13204 EXECUTIVE PARK TERRACE
GERMANTOWN MD 20874

106385080479 1 1C01CY1FB11M1
NORTHEAST NUCLEAR ENERGY CO
MILLSTONE 1 NPS
PLANT MANAGER
PO BOX 128
WATERFORD CT 06385

106101064595 1 1C01CY1FB11M1
NORTHEAST UTILITIES SERVICE CO
R M DAVENPORT
MGR-GENERATION FACILITIES RECS
PO BOX 270
HARTFORD CT 06101

106141103281 1 1C01CY1FB11M1
NORTHEAST UTILITIES SERVICE CO
NUCLEAR OPERATIONS
EDWARD J MROCZKA
EXECUTIVE OFFICER
PO BOX 270
HARTFORD CT 06141

155362081508 1 1C01CY1FB11M1
NORTHERN STATES POWER CO
MONTICELLO NPS
PLANT MANAGER
PO BOX 600 W CTY RD 75
MONTICELLO MN 55362

155401140917 1 1C01CY1FB11M1
NORTHERN STATES POWER CO
NUCLEAR SUPPORT SERVICES
J J HOWARD
PRESIDENT
414 NICOLLET MALL
MINNEAPOLIS MN 55401

113093137234 1 1C01CY1FB11M1
NIAGARA MOHAWK POWER CORP
NUCLEAR SECURITY
JOSEPH P BERATTA
P O BOX 63 /NMP UNIT 2
B-1
LYCOMING NY 13093

113212139289 1 1C01CY1FB11M1
NIAGARA MOHAWK POWER CORP
F A HAWKSLEY
SALINA MDWS 301 PLAINFIELD RD
SYRACUSE NY 13212

113093079362 1 1C01CY1FB11M1
NIAGARA MOHAWK POWER CORP
J R SPADAFORE
TECHNICAL SUPERINTENDENT
PO BOX 32
LYCOMING NY 13093

113093141707 1 1C01CY1FB11M1
NIAGARA MOHAWK POWER CORP
NUCLEAR GENERATION
T L WILLIS
GENERAL SUPERINTENDENT
LAKE ROAD PO BOX 32
LYCOMING NY 13093

1ITALY080890 1 1C01CY1FB11M1
NIRA
LIBRARY
VIA DEI PESCATORI 35
GENOVA 16129 ITALY

149770104207 1 1C01CY1FB11M1
NORTH CENTRAL MICHIGAN COLLEGE
ERIC GRANDSTAFF
LIBRARY DIRECTOR
1515 HOWARD ST
PETOSKEY MI 49770

106101073358 1 1C01CY1FB11M1
NORTHEAST NUCLEAR ENERGY CO
D O NORDQUIST
DIRECTOR QUALITY SERVICE
PO BOX 270
HARTFORD CT 06101

106385080931 1 1C01CY1FB11M1
NORTHEAST UTILITIES SERVICE CO
F C LIBBY JR
SUPVR ASSESSMENT SERVICES
PO BOX 128
WATERFORD CT 06385

108840141841 1 1C01CY1FB11M1
NORTHEASTERN RES & TESTING CO
MICHAEL BELLAVIA
P.O. BOX 445
METUCHEN NJ 08840

155089030508 1 1C01CY1FB11M1
NORTHERN STATES POWER CO
PRAIRIE ISLAND 1 NPS
PLANT MANAGER
WELCH MN 55089

155401109386 1 1C01CY1FB11M1
NORTHERN STATES POWER CO
C E LARSON
VICE PRESIDENT-NUCL GENERATION
414 NICOLLET MALL
MINNEAPOLIS MN 55401

155401003203 1 1C01CY1FB11M1
NORTHERN STATES POWER CO
NUCLEAR SUPPORT SERVICES
T M PARKER
MANAGER
414 NICOLLET MALL
MINNEAPOLIS MN 55401

144130137725 1 1C01CY1FB11M1
NOVA MACHINE PRODUCTS CORP
P S NOVOSEL
PRESIDENT
PO BOX 30287
MIDDLEBURG HEIGHTS OH 44130

178758091610 1 1C01CY1FB11M1
NPS INDUSTRIES INC
TERRY O'CONNELL
MANAGER OF QUALITY ASSURANCE
10420 METRIC BLVD
AUSTIN TX 78758

106426137691 1 1C01CY1FB11M1
NJC SERVICES
THOMAS L PAYNE
PO BOX 699, 110 PLAINS RD
ESSEX CT 06426

156044094191 1 1C01CY1FB11M1
NUCLEAR AWARENESS NETWORK
STEVI STEPHENS
1347 1/2 MASSACHUSETTS
LAWRENCE KS 66044

122101139930 1 1C01CY1FB11M1
NUCLEAR DATA SERVICES INC
EARL G GADEN
PO BOX 1097
MCLEAN VA 22101

120852138487 1 1C01CY1FB11M1
NUCLEAR ENERGY CONSULTANTS INC
ENGR & REGULATORY OFC
11921 ROCKVILLE PIKE
SUITE 107
ROCKVILLE MD 20852

106810137585 1 1C01CY1FB11M1
NUCLEAR ENERGY SERVICES
KARL F SCHMIDT, JR.
VICE PRESIDENT
SHELTER ROCK RD
DANBURY CT 06810

106810026651 1 1C01CY1FB11M1
NUCLEAR ENERGY SERVICES INC
NES DIVISION
THEODORE KETTLER
MANAGER SYSTEMS ANALYSIS
SHELTER ROCK ROAD
DANBURY CT 06810

106810038037 1 1C01CY1FB11M1
NUCLEAR ENERGY SERVICES INC
PLANT SERVICES
HOWARD J LARSON
SENIOR VICE PRESIDENT
SHELTER ROCK ROAD
DANBURY CT 06810

1FNGLA057563 1 1C01CY1FB11M1
NUCLEAR INSTALLATIONS INSPECT
POLICY SECTION
J MACLEOD
1 CHEPSTOW PL-BAYNARDS HOUSE
RM 213
LONDON W2 4TF ENGLAND

155089081554 1 1C01CY1FB11M1
NORTHERN STATES POWER CO
PRAIRIE ISLAND NPS
E L WATZL
PLANT MANAGER
1717 WAKONADE DRIVE EAST
WELCH MN 55089

107094000804 1 1C01CY1FB11M1
NPS INDUSTRIES INC
JOEL LEVINE
EXECUTIVE VICE PRES
600 MEADOWLANDS PKWY
SECAUCUS NJ 07094

107932138464 1 1C01CY1FB11M1
NPS TECHNICAL SERVICES INC
TECHNICAL LIBRARY
GEORGE HENRY
QA MANAGER
147 COLUMBIA TURNPIKE
FLORHAM PARK NJ 07932

130092064094 1 1C01CY1FB11M1
NUCLEAR ASSURANCE CORP
INFORMATION CENTER
LIBRARIAN
6251 CROOKED CREEK RD
SUITE 200
NORCROSS GA 30092

143229093284 1 1C01CY1FB11M1
NUCLEAR CONSULTING SERVICES
JOSEPH C ENNEKING
VICE PRESIDENT
PO BOX 29151
COLUMBUS OH 43229

119801139932 1 1C01CY1FB11M1
NUCLEAR ELECTRIC INSURANCE LTD
GREGORY WILKS
1201 MARKET ST
SUITE 1200
WILMINGTON DE 19801

123229141483 1 1C01CY1FB11M1
NUCLEAR ENERGY SERVICES
ENGINEERING DIV
JOSE DUBON
PRINCIPAL ENGINEER
9501 TURF CLUB CT #1114
RICHMOND VA 23229

106810028328 1 1C01CY1FB11M1
NUCLEAR ENERGY SERVICES INC
BEN G ASHBY
SHELTER ROCK ROAD
DANBURY CT 06810

106810074443 1 1C01CY1FB11M1
NUCLEAR ENERGY SERVICES INC
ALBERT A KOEHL
TECHNICAL CONSULTANT
SHELTER ROCK ROAD
DANBURY CT 06810

137650001707 1 1C01CY1FB11M1
NUCLEAR FUEL SERVICES INC
LICENSING SAFEGUARDS
RUTH SALTS
ADM SUPVR MATLS
205 BANNER HILL RD
ERWIN TN 37650

101742063894 1 1C01CY1FB11M1
NUCLEAR METALS INC
HEALTH & RADIATION SAFETY
FRANK J VUMBACO
2229 MAIN ST
#8
CONCORD MA 01742

1INDIA091242 1 1C01CY1FB11M1
NUCLEAR POWER BOARD
HEALTH AND SAFETY GROUP
P ABRAHAM
ADMINISTRATOR
COLABA
BOMBAY 400 005 INDIA

195926103292 1 1C01CY1FB11M1
NUCLEAR POWER CONSULTANTS INC
ROBERT M COMPTON
3629 KEEFER RD
CHICO CA 95926

122041140123 1 1C01CY1FB11M1
NUCLEAR SAFETY RESEARCH ASSN
TOKUKO SMITH
PO BOX 1307
FALLS CHURCH VA 22041

120878107745 1 1C01CY1FB11M1
NUCLEAR SERVICES CORP
MGR LICENSING SERVICES
910 CLOPPER RD
GAITHERSBURG MD 20878

120006138461 1 1C01CY1FB11M1
NUMARC
JACKIE L BYLSMA
1776 EYE ST NW
SUITE 300
WASHINGTON DC 20006

120878139623 1 1C01CY1FB11M1
NUS CORP
UTILITY BUSINESS
S J HOLBUS
GENERAL MANAGER
910 CLOPPER RD
GAITHERSBURG MD 20878

120878064640 1 1C01CY1FB11M1
NUS CORP
R C ROSSI
ASSISTANT GENERAL MGR
910 CLOPPER RD
GAITHERSBURG MD 20878

120814079682 1 1C01CY1FB11M1
NUTECH INC
3 BETHESDA METRO CENTER
430
BETHESDA MD 20814

152864091619 1 1C01CY1FB11M1
NUTHERM INTERNATIONAL INC
W ECKERT
CHAIRMAN
501 S 11TH ST
MT VERNON IL 62864

137831139261 1 1C01CY1FB11M1
OAK RIDGE ASSOC UNIV
REAC/TS
PO BOX 117
OAK RIDGE TN 37831

137831139452 1 1C01CY1FB11M1
OAK RIDGE NATIONAL LAB
V D CHRISTENSEN
PO BOX 2008, BLDG 7964-B
MS-6390
OAK RIDGE TN 37831

120906109874 1 1C01CY1FB11M1
NUCLEAR POWER CONSULTANTS INC
12125/27 HERITAGE PARK CIRCLE
SILVER SPRING MD 20906

1SWEDE057560 1 1C01CY1FB11M1
NUCLEAR POWER INSPECTORATE
DIRECTOR GENERAL
HOERMANDE OLOF
BOX 27106
STOCKHOLM S-102 52 SWEDEN

122041140267 1 1C01CY1FB11M1
NUCLEAR SAFETY RESEARCH ASSN
TOKUKO SM I TH
PO BOX 1307
FALLS CHURCH VA 22041

117033137656 1 1C01CY1FB11M1
NUCLEAR SUPPORT SERVICES INC
HENZE SERVICE
MICHAEL F PANTALEO
PRESIDENT
PO BOX 3120
HERSHEY PA 17033

120877139499 1 1C01CY1FB11M1
NUS CORP
HOWARD ECKERT
PO BOX 6032
GAITHERSBURG MD 20877

120878090047 1 1C01CY1FB11M1
NUS CORP
RADIATION PROTECTION SECTION
THOMAS L JENTZ
SUPERVISOR
910 CLOPPER RD
GAITHERSBURG MD 20878

120878064660 1 1C01CY1FB11M1
NUS CORP
M P SENASACK
CDQA ADMINISTRATOR
910 CLOPPER RD
GAITHERSBURG MD 20878

195119057203 1 1C01CY1FB11M1
NUTECH INC
CORPORATE LIBRARY
145 MARTINVALE LANE
SAN JOSE CA 95119

111201138128 1 1C01CY1FB11M1
NY STATE DEPT OF LABOR
DIV OF SAFETY & HEALTH
GEORGE L KASYK
ONE MAIN ST
ROOM 813
BROOKLYN NY 11201

137831139198 1 1C01CY1FB11M1
OAK RIDGE NATIONAL LAB
PERFORMANCE ASSURANCE PROJ OFF
PO BOX 2009 - BLDG 9204-1-1
MS-8050
OAK RIDGE TN 37831

137831137288 1 1C01CY1FB11M1
OAK RIDGE NATIONAL LAB
DIV OF RESEARCH REACTORS
TOM L DAHL, SR.
PO BOX 2008
MS-6387
OAK RIDGE TN 37831