FINAL SAFETY ANALYSIS REPORT

CHAPTER 8

ELECTRIC POWER

© 2008 UniStar Nuclear Services, LLC. All rights reserved.
COPYRIGHT PROTECTED

© 2008 UniStar Nuclear Services, LLC. All rights reserved.
COPYRIGHT PROTECTED

Table of Contents

8.0 Electric Power 8–1

8.1 Introduction 8–1
8.1.1 Offsite Power Description 8–1
8.1.2 Onsite Power System Description 8–1
8.1.3 Safety-Related Loads 8–1
8.1.4 Design Bases 8–2
8.1.5 References 8–2

8.2 Offsite Power System 8–6
8.2.1 Description 8–6
8.2.2 Analysis. 8–11
8.2.3 References 8–20

8.3 Onsite Power Systems 8–25
8.3.1 Alternating Current Power Systems 8–25
8.3.2 DC Power Systems. 8–28
8.3.3 References 8–28

8.4 Station Blackout. 8–37
8.4.1 Description 8–37
8.4.2 Analysis. 8–37
8.4.3 References 8–39

© 2008 UniStar Nuclear Services, LLC. All rights reserved.
COPYRIGHT PROTECTED

List of Tables

Table 8.1-1 {Division 1 Emergency Diesel Generator Nominal Loads} 8–3
Table 8.1-2 {Division 2 Emergency Diesel Generator Nominal Loads} 8–3
Table 8.1-3 {Division 3 Emergency Diesel Generator Nominal Loads} 8–4
Table 8.1-4 {Division 4 Emergency Diesel Generator Nominal Loads} 8–4
Table 8.2-1 {PPL EU Transmission System Circuits Connected to the BBNPP Site} 8–22
Table 8.3-1 {BBNPP Onsite AC Power System Component Data Nominal Values} 8–29
Table 8.3-2 {BBNPP EPSS Switchgear, Load Center, and Motor Control Center Numbering and Nominal Voltage}8–29
Table 8.3-3 {BBNPP Normal Power Supply System Switchgear Numbering and Nominal Voltage }8–29

© 2008 UniStar Nuclear Services, LLC. All rights reserved.
COPYRIGHT PROTECTED

List of Figures

Figure 8.1-1 {BBNPP Site 500 kV Circuit Corridors} 8–5
Figure 8.2-1 {BBNPP Unit 3 500kV Switchyard and Transmission Line Layout} 8–23
Figure 8.2-2 {BBNPP 500kV Switchyard Single Line Diagram} 8–24
Figure 8.3-1 {BBNPP Emergency Power Supply System Single Line Drawing} 8–30
Figure 8.3-2 {BBNPP Normal Power Supply System Single Line Drawing}. 8–33

© 2008 UniStar Nuclear Services, LLC. All rights reserved.
COPYRIGHT PROTECTED

© 2008 UniStar Nuclear Services, LLC. All rights reserved.
COPYRIGHT PROTECTED

8.0 ELECTRIC POWER

This chapter of the U.S. EPR Final Safety Analysis Report (FSAR) is incorporated by reference with supplements as identified in the following sections.

8.1 INTRODUCTION

This section of the U.S. EPR FSAR is incorporated by reference with the following supplements.

8.1.1 OFFSITE POWER DESCRIPTION

The U.S. EPR FSAR includes the following COL Item in Section 8.1.1:

> A COL applicant that references the U.S. EPR design certification will provide site-specific information describing the interface between the offsite transmission system, and the nuclear unit, including switchyard interconnections.

This COL Item is addressed as follows:

{The BBNPP 500 kV transmission system consists of two offsite circuits, one circuit connects the BBNPP site to the existing Susquehanna 500 kV Yard via a 500 kV, 4260 MVA line and one circuit connects the BBNPP site to the Susquehanna 500 kV Yard 2 via a 500 kV, 4260 MVA line. Each circuit is on individual towers. The general routing of the lines is shown on Figure 8.1-1.

The BBNPP is connected to the BBNPP switchyard by means of six overhead lines.}

The interface between the transmission system and the nuclear unit is further described in Section 8.2.

8.1.2 ONSITE POWER SYSTEM DESCRIPTION

No departures or supplements.

8.1.3 SAFETY-RELATED LOADS

The U.S. EPR FSAR includes the following COL Item in Section 8.1.3:

> A COL applicant that references the U.S. EPR design certification will identify site-specific loading differences that raise the EDG or Class 1E battery loading and demonstrate the electrical distribution system is adequately sized for the additional load.

This COL Item is addressed as follows:

The loads powered from the safety-related sources for the U.S. EPR are specified in U.S. EPR FSAR Tables 8.3-4, 8.3-5, 8.3-6, and 8.3-7. {Additional site-specific loads powered from the station EDGs are specified in Table 8.1-1, Table 8.1-2, Table 8.1-3, and Table 8.1-4. This information supplements U.S. EPR FSAR Tables 8.3-4, 8.3-5, 8.3-6, and 8.3-7. The site-specific loads are within the design margin of the EDGs. Onsite DC power system nominal load values are specified in U.S. EPR FSAR Tables 8.3-12 through 8.3-15. Additional site-specific loads from the Class 1E battery source include an additional feeder breaker on the 31/2/3/4BDD bus that provides electrical power to the 6.9 kV to 480 V ESWEMS transformers. Each of these feeder

© 2008 UniStar Nuclear Services, LLC. All rights reserved.
COPYRIGHT PROTECTED

breaker require steady state control power of 0.04 kW. The site-specific Class 1E control power demand is within the design margin of the EUPS Battery Sizing Calculation and does not change the DC load requirements specified in the U.S. EPR FSAR Tables 8.3-12 through 8.3-15.}

8.1.4 DESIGN BASES

8.1.4.1 Offsite Power System

No departures or supplements.

8.1.4.2 Onsite Power System

No departures or supplements.

8.1.4.3 Criteria, Regulatory Guides, Standards, and Technical Positions

No departures or supplements.

8.1.4.4 NRC Generic Letters

The U.S. EPR FSAR includes the following COL Item in Section 8.1.4.4:

> The COL applicant that references the U.S. EPR design certification is responsible for addressing the information presented in NRC generic letter 2006-02 as indicated in Section 8.2.1.1.

This COL Item is addressed as follows:

The information requested by the NRC in Generic Letter 2006-02 (NRC, 2006), as indicated in U.S. EPR FSAR Section 8.2.1.1, is presented in Section 8.2.1.1.

8.1.5 REFERENCES

{NRC, 2006. Grid Reliability and the Impact on Plant Risk and Operability of Offsite Power, NRC Generic Letter 2006-02, U.S. Nuclear Regulatory Commission, February 2006.}

© 2008 UniStar Nuclear Services, LLC. All rights reserved.
COPYRIGHT PROTECTED

Table 8.1-1 {Division 1 Emergency Diesel Generator Nominal Loads}

Time Seq. (s)	Load Description	Volts	Rating (hp/kW)	Alternate Feed Load (kW)	Operating Load LOOP (kW)	Operating Load DBA/ LOOP (kW)
Load Step Group 1						
15 (Note 1)	Air conditioning unit for the ESWEMS Pumphouse (1 per division, 46 kW each)	480	46 kW		46	46
15 (Note 1)	Electric heating for ESWEMS Pumphouse(2 per division, 25 kW each)	480	50 kW		0	0
15 (Note 2)	Estimated auxiliary loads	480	25 kW		0	0
15	Estimated site-specific load contribution from transformer and cable losses		9 kW		9	9
Subtotal of Additional Loads for Load Step Group 1					55	55
Additional Manually Connected Loads						
N/A (Note 3)	ESWEMS Pump	480	50 hp		0	0
Total of Additional Manually Connected Loads					0	0

Notes:
1. Cooling systems are assumed to be operating and heating systems are off.
2. Auxiliary loads (sumps, screens, MOVs, etc.) not included in load totals due to infrequent operation and short duration of operation.
3. The emergency makeup pump is not required to run during the first 72 hours of a DBE.

Table 8.1-2 {Division 2 Emergency Diesel Generator Nominal Loads}

Time Seq. (s)	Load Description	Volts	Rating (hp/kW)	Alternate Feed Load (kW)	Operating Load LOOP (kW)	Operating Load DBA/ LOOP (kW)
Load Step Group 1						
15 (Note 1)	Air conditioning unit for the ESWEMS Pumphouse (1 per division, 46 kW each)	480	46 kW		46	46
15 (Note 1)	Electric heating for ESWEMS Pumphouse (2 per division, 25 kW each)	480	50 kW		0	0
15(Note 2)	Estimated auxiliary loads	480	25 kW		0	0
15	Estimated site-specific load contribution from transformer and cable losses		9 kW		9	9
Subtotal of Additional Loads for Load Step Group 1					55	55
Additional Manually Connected Loads						
N/A (Note 3)	ESWEMS Pump	480	50 hp		0	0
Total of Additional Manually Connected Loads					0	0

Notes:
1. Cooling systems are assumed to be operating and heating systems are off.
2. Auxiliary loads (sumps, screens, MOVs, etc.) not included in load totals due to infrequent operation and short duration of operation.
3. The emergency makeup pump is not required to run during the first 72 hours of a DBE.

© 2008 UniStar Nuclear Services, LLC. All rights reserved.
COPYRIGHT PROTECTED

Table 8.1-3 {Division 3 Emergency Diesel Generator Nominal Loads}

Time Seq. (s)	Load Description	Volts	Rating (hp/kW)	Alternate Feed Load (kW)	Operating Load LOOP (kW)	Operating Load DBA/ LOOP (kW)
Load Step Group 1						
15 (Note 1)	Air conditioning unit for the ESWEMS Pumphouse (1 per division, 46 kW each)	480	46 kW		46	46
15 (Note 1)	Electric heating for ESWEMS Pumphouse(2 per division, 25 kW each)	480	50 kW		0	0
15 (Note 2)	Estimated auxiliary loads	480	25 kW		0	0
15	Estimated site-specific load contribution from transformer and cable losses		9 kW		9	9
Subtotal of Additional Loads for Load Step Group 1					55	55
Additional Manually Connected Loads						
N/A (Note 3)	ESWEMS Pump	480	50 hp		0	0
Total of Additional Manually Connected Loads					0	0

Notes:
1. Cooling systems are assumed to be operating and heating systems are off.
2. Auxiliary loads (sumps, screens, MOVs, etc.) not included in load totals due to infrequent operation and short duration of operation.
3. The emergency makeup pump is not required to run during the first 72 hours of a DBE.

Table 8.1-4 {Division 4 Emergency Diesel Generator Nominal Loads}

Time Seq. (s)	Load Description	Volts	Rating (hp/kW)	Alternate Feed Load (kW)	Operating Load LOOP (kW)	Operating Load DBA/ LOOP (kW)
Load Step Group 1						
15 (Note 1)	Air conditioning unit for the ESWEMS Pumphouse (1 per division, 46 kW each)	480	46 kW		46	46
15 (Note 1)	Electric heating for ESWEMS Pumphouse (2 per division, 25 kW each)	480	50 kW		0	0
15 (Note 2)	Estimated auxiliary loads	480	25 kW		0	0
15	Estimated site-specific load contribution from transformer and cable losses		9 kW		9	9
Subtotal of Additional Loads for Load Step Group 1					55	55
Additional Manually Connected Loads						
N/A (Note 3)	ESWEMS Pump	480	50 hp		0	0
Total of Additional Manually Connected Loads					0	0

Notes:
1 Cooling systems are assumed to be operating and heating systems are off.
2. Auxiliary loads (sumps, screens, MOVs, etc.) not included in load totals due to infrequent operation and short duration of operation.
3. The emergency makeup pump is not required to run during the first 72 hours of a DBE.

© 2008 UniStar Nuclear Services, LLC. All rights reserved.
COPYRIGHT PROTECTED

Figure 8.1-1 {BBNPP Site 500 kV Circuit Corridors}

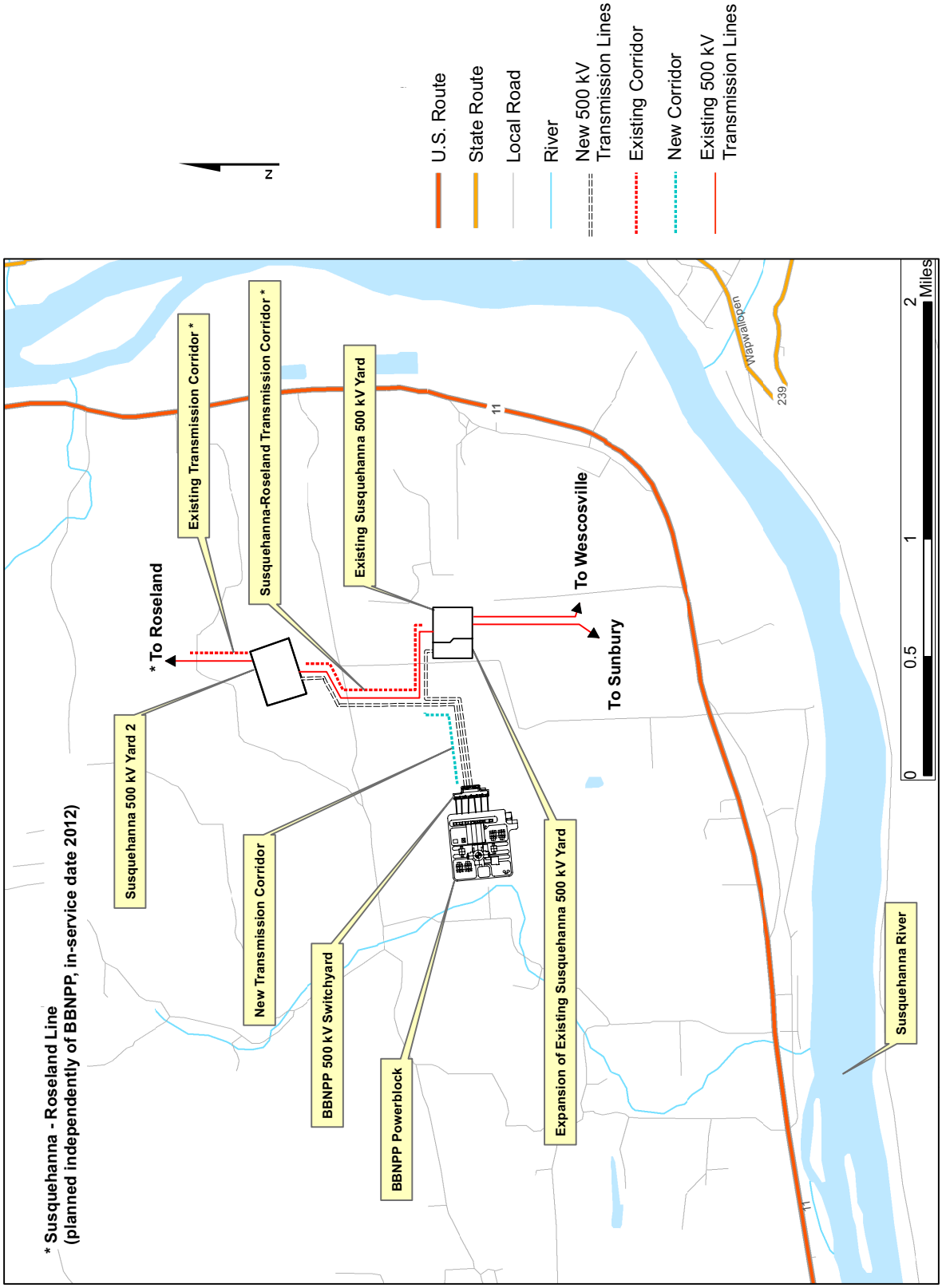

© 2008 UniStar Nuclear Services, LLC. All rights reserved.
COPYRIGHT PROTECTED

8.2 OFFSITE POWER SYSTEM

This section of the U.S. EPR FSAR is incorporated by reference with the following supplements.

8.2.1 DESCRIPTION

8.2.1.1 Offsite Power

The U.S. EPR FSAR includes the following COL Item in Section 8.2.1.1.

> A COL applicant that references the U.S. EPR design certification will provide site specific information regarding the offsite transmission system and connections to the station switchyard.

This COL Item is addressed as follows:

{The new BBNPP switchyard is connected to BBNPP by means of six overhead lines.

- One line connects to the plant main transformer and is used for power export to the transmission system.
- Five lines connect to the auxiliary transformers. (Two emergency auxiliary transformers (EATs) and three normal auxiliary transformers (NATs).)

In addition, two normally energized, physically independent transmission lines, designed and located to minimize the likelihood of their simultaneous failure under operating, postulated accident, and postulated adverse environmental conditions, including transmission line tower failure or transmission line breaking; connect the BBNPP switchyard to the transmission system:

- One new approximately 0.7 mi (1.1 km) long overhead 500 kV transmission line connects the new BBNPP switchyard to an expansion of the existing Susquehanna 500 kV Yard.
- One new approximately 1 mi (1.6 km) long overhead 500 kV transmission line connects the new BBNPP switchyard to the new Susquehanna 500 kV Yard 2.

Design details of the two transmission lines that connect the BBNPP site to the PPL Electric Utilities Corporation (PPL EU) transmission system are shown in the Table 8.2-1. Figure 8.2-1 depicts the 500 kV transmission configuration.

The two overhead 500 kV transmission lines provide the two preferred sources of power for the reactor protection system and engineered safety features (ESFs) during normal, abnormal, and accident conditions.

The BBNPP is located adjacent to the existing Susquehanna Steam Electric Station (SSES). As such, significant transmission infrastructure exists within close proximity to the BBNPP site. In addition to existing transmission infrastructure, PPL EU is developing a new 500 kV transmission line from the existing Susquehanna 500 kV Yard to the Roseland Substation (New Jersey). This expansion effort is a PJM Regional Transmission Expansion Plan (RTEP) initiative. PJM has determined that this new 500 kV line is required for grid reliability in the region without considering whether BBNPP is constructed. The in-service date of the Susquehanna-Roseland RTEP project is planned for 2012 and is expected to precede the completion of construction of the Bell Bend Nuclear Power Plant.

© 2008 UniStar Nuclear Services, LLC. All rights reserved.
COPYRIGHT PROTECTED

BBNPP transmission lines will utilize one new on-site corridor and the on-site Susquehanna-Roseland corridor for interconnections to the existing offsite power transmission grid as shown in Figure 8.2-1. The two circuits are supported on separate structures, which are located to minimize the likelihood of simultaneous failure. Transmission tower separation, line installation, and clearances are consistent with the National Electrical Safety Code (NESC), PPL EU transmission line standards, and PPL requirements. Basic tower structural design parameters, including the number of conductors, height, materials, color, and finish are consistent with PPL EU transmission line design standards. Adequate clearance will be provided to ensure that both of these Bell Bend transmission lines will not be lost in the event of a tower collapse.

The transmission system consists of two circuits. One circuit consists of a single three-phase 500 kV transmission line from the BBNPP site to the Susquehanna 500 kV Yard via breakers CB 10 and 11. The other circuit consists of a single three-phase 500 kV transmission line from the BBNPP site to the new Susquehanna 500 kV Yard 2 via breakers CB 7 and 8.

Both circuits in the new on-site corridor join the Susquehanna-Roseland corridor from the new Susquehanna 500 kV Yard 2 as it turns east towards the existing Susquehanna 500 kV Yard, as shown on Figure 8.2-1. The interconnection layout of these transmission lines is shown in Figure 8.2-2.

The new BBNPP 500 kV Yard is described in Section 8.2.1.2, Station Switchyard. The Susquehanna 500 kV Yard 2 is a new facility that will be located directly on the Susquehanna-Roseland corridor. The existing Susquehanna 500 kV Yard will be expanded by two bays to accommodate the new Bell Bend connection.}

The U.S. EPR FSAR includes the following COL Item in Section 8.2.1.1.

> A COL applicant that references the U.S. EPR design certification will provide site specific information regarding the communication agreements and protocols between the station and the transmission system operator, independent system operator, or reliability coordinator and authority. Additionally, the applicant will provide a description of the analysis tool used by the transmission operator to determine, in real time, the impact the loss or unavailability of various transmission system elements will have on the condition of the transmission system to provide post-trip voltages at the switchyard. The information provided will be consistent with information requested by the NRC in NRC generic letter 2006-02.

This COL Item is addressed as follows:

{The BBNPP site lies within the service territory of PPL EU. The plant will utilize transmission facilities that are owned by PPL EU under the direction and control of the PJM interconnection. PPL EU, PJM and the BBNPP operator will have formal agreements and protocols in place to provide safe and reliable operation of the transmission system and equipment at BBNPP.

The addition of a large generating unit such as BBNPP requires completion of the PJM Large Generator Interconnection Procedure (LGIP). This procedure requires that a series of progressively refined studies be performed to identify transmission system modifications to accommodate the new generating unit (combined turbine-generator-exciter) and the main step-up transformer(s) including modifications to substations and switchyards.

© 2008 UniStar Nuclear Services, LLC. All rights reserved.
COPYRIGHT PROTECTED

The reliability of the PJM system is continuously (real time) analyzed through PJM's Energy Management System (EMS) program.

In accordance with PJM manual requirements that implement the Operating Agreement, both the transmission owner (PPL EU) and PJM continuously monitor and evaluate grid reliability and switchyard voltages. PPL EU will inform BBNPP of any grid instability or voltage inadequacies and PPL EU will ensure local voltage requirements are maintained as required by the nuclear plant. However, in special grid emergency situations warranting immediate, coordinated action, PJM can initiate joint communications with the transmission owner (PPL EU), the marketing operations center (PPL EnergyPlus generation dispatch center) and the plant operator (BBNPP).

BBNPP reviews the transmission system parameters and informs PPL EU (via the PPL EnergyPlus generation dispatch center) immediately prior to initiating any plant activities that may affect grid reliability. In addition, plant operators inform PPL EU via the generation dispatch center of changes in generation ramp rates and notify them of any developing problems that may impact generation.

A formal agreement between BBNPP and PJM will establish the requirements for transmission system studies and analyses. PJM will perform short-term grid analyses to support BBNPP plant startup and normal shutdown.

The agreement between PJM and BBNPP will establish protocols for the plant to remain cognizant of grid vulnerabilities to make informed decisions regarding maintenance activities critical to the electrical system. During plant operation, PPL EU and PJM continuously monitor real-time power flows and assess contingencies. Operational planning studies are also performed using offline power flow study tools to assess near term operating conditions under varying load, generation, and transmission topology patterns.}

8.2.1.2 Station Switchyard

The U.S. EPR FSAR includes the following COL Item in Section 8.2.1.2:

> A COL applicant that references the U.S. EPR design certification will provide site-specific information for the switchyard layout design.

This COL Item is addressed as follows:

{The new 500 kV Gas Insulated Switchyard (GIS) for BBNPP has been designed and is sized and configured to accommodate the output of BBNPP. The location of the BBNPP switchyard is on the BBNPP site approximately 150 ft (46 m) east of BBNPP and approximately 2450 ft (747 m) west of the existing Susquehanna 500 kV Yard. The BBNPP 500 kV switchyard transmits electrical power output from BBNPP to the transmission system. The BBNPP switchyard layout and location are shown on Figure 8.2-1.

A single line of the BBNPP switchyard layout design, which incorporates a breaker-and-a-half / double breaker scheme, is presented in Figure 8.2-2. Circuit breakers and disconnect switches are sized and designed in accordance with IEEE Standard C37.06 (IEEE, 2000). All circuit breakers are equipped with dual trip coils. The 500 kV circuit breakers in the switchyard are rated according to the following criteria.

© 2008 UniStar Nuclear Services, LLC. All rights reserved.
COPYRIGHT PROTECTED

- Circuit breaker continuous current ratings are chosen such that no single contingency in the switchyard (e.g., a breaker being out for maintenance) will result in a load exceeding 100% of the nameplate continuous current rating of the breaker.
- Interrupting duties are specified such that no fault occurring on the system, operating in steady-state conditions will exceed the breaker's nameplate interrupting capability.
- Momentary ratings are specified such that no fault occurring on the system, operating in steady-state conditions will exceed the breaker's nameplate momentary rating.
- Voltage ratings are specified to be greater than the maximum expected operating voltage.

The design of the BBNPP switchyard includes six bays in the configuration. The breaker-and-a-half/double breaker switchyard arrangement offers the operating flexibility to maintain the anticipated operational containment integrity and other vital functions in the event of postulated failures as described in the Failure Modes and Effects Analysis (FMEA) as described in Section 8.2.2.4 and U.S. EPR FSAR Section 8.2.2.4. Some of the specific advantages of the breaker-and-a-half/double breaker switchyard arrangement are as follows.

- Any transmission line into the switchyard can be cleared either under normal or fault conditions without affecting any other transmission line or bus.
- Either bus can be cleared under normal or fault conditions without interruption of any transmission line or the other bus.
- Any circuit breaker can be isolated for maintenance or inspection without interruption of any transmission line or bus.
- A fault in a tie breaker or failure of the breaker to trip for a line fault results only in the loss of its two adjacent circuits until it can be isolated by disconnect switches.
- A fault in a bus side breaker or failure of the breaker to trip for a line or generator fault results only in the loss of the adjacent circuits and the adjacent bus until it can be isolated by disconnect switches.}

The U.S. EPR FSAR includes the following COL Item in Section 8.2.1.2:

> A COL applicant that references the U.S. EPR design certification will provide site-specific information regarding indication and control of switchyard components.

This COL Item is addressed as follows:

{A control house is located along the southern side of the switchyard to support control and protection requirements. Control power for switchyard breakers required to connect or disconnect any components of BBNPP from the transmission system is provided by the switchyard batteries. There is a dual set of batteries located inside the switchyard control house. Switchyard breakers operate to clear a fault on any auxiliary transformer and for system faults such as bus differential or breaker failure. A switchyard DC system undervoltage condition is alarmed in the main control room.

BBNPP owns and maintains all equipment in the Bell Bend 500kV Switchyard. However, administrative control of the Bell Bend switchyard breakers is shared between BBNPP and PJM. BBNPP has juridictional control and normally operates the breakers connecting the Main Step-Up (MSU) transformers and the auxiliary transformers. PJM has jurisdictional control and has, via

© 2008 UniStar Nuclear Services, LLC. All rights reserved.
COPYRIGHT PROTECTED

delegation to PPL EU, the ability to operate the breakers associated with the offsite (grid interface) connecting transmission lines. One circuit from the BBNPP site to the existing Susquehanna 500 kV Yard is via breakers CB 10 and 11. The other circuit is from the BBNPP site to the new Susquehanna 500 kV Yard 2 via breakers CB 7 and 8. PJM will retain jurisdictional control of these breakers to operate them as part of the network. Local tripping control is also provided at the circuit breakers. Disconnect switches are provided to individually isolate each circuit breaker from the switchyard bus and associated lines. This permits individual breaker maintenance and testing to proceed while the switchyard and lines remain energized.}

The U.S. EPR FSAR includes the following COL Item in Section 8.2.1.2:

> A COL applicant that references the U.S. EPR design certification will provide site-specific information for the protective devices that control the switchyard breakers and other switchyard relay devices.

This COL Item is addressed as follows:

{Electrical protection of circuits from the BBNPP switchyard is provided by a primary and secondary relaying scheme. The current input for the protective relaying schemes come from separate sets of circuit breaker bushing current transformers. Also, the control power for all primary and secondary relaying schemes is supplied from separate switchyard 125 VDC battery systems. These schemes are used for the following:

- The scheme is used on each of the two 500 kV transmission circuits from the BBNPP 500 kV switchyard to the transmission system. The potential input for the primary and secondary transmission circuit relaying systems is supplied from fused branch circuits originating from a set of coupling capacitor potential devices connected to the associated transmission circuit.
- The switchyard buses use a primary and backup scheme. The zone of protection of each 500 kV bus includes all the 500 kV circuit breakers adjacent to the protected bus.
- Line protection for the MSU transformer and auxiliary transformers use primary and backup schemes.

In addition to the above described relaying systems, each of the 500 kV circuit breakers has an associated circuit breaker failure relaying system. A circuit breaker failure scheme is provided in the unlikely event a circuit breaker fails to trip. If a breaker fails to open coincident with a line fault, tripping of all breakers adjacent to the failed breaker will occur. If the failed breaker is the center breaker, then only the remaining bus breaker will trip resulting in the undesired loss of the other line in the bay. If the failed breaker is a bus breaker then all breakers connected to the same bus will be tripped. Assuming all bus and center breakers are normally closed, the remaining bus will continue to supply all line elements.

For the two 125 VDC batteries located in the BBNPP 500 kV switchyard control house, each battery has its own battery charger. Each battery charger is connected to separate 480 VAC distribution panel boards also located in the control house. The switchyard 125 VDC battery systems are independent of the BBNPP non-Class 1E and Class 1E battery systems.}

© 2008 UniStar Nuclear Services, LLC. All rights reserved.
COPYRIGHT PROTECTED

8.2.1.3 Transformer Area

No departures or supplements.

8.2.2 ANALYSIS

No departures or supplements.

8.2.2.1 Compliance with GDC 2

No departures or supplements.

8.2.2.2 Compliance with GDC 4

No departures or supplements.

8.2.2.3 Compliance with GDC 5

No departures or supplements.

8.2.2.4 Compliance with GDC 17

The U.S. EPR FSAR includes the following COL Item in Section 8.2.2.4:

> A COL applicant that references the U.S. EPR design certification will provide a site-specific grid stability analysis. The results of the analysis will demonstrate that:

- The PPS is not degraded below a level that will activate EPSS degraded grid protection actions after any of the following single contingencies:
  - U.S. EPR turbine generator trip.
  - Loss of the largest unit supplying the grid.
  - Loss of the largest transmission circuit or inter-tie.
  - Loss of the largest load on the grid.
- The transmission system will not subject the reactor coolant pumps to a sustained frequency decay of greater than 3.5 Hz/sec as bounded by the decrease in reactor coolant system flow rate transient and accident analysis described in Section 15.3.2.

This COL Item is addressed as follows:

{There are two relevant PJM studies for BBNPP; the preliminary Susquehanna 1600 MW R01-R02 Impact Study Re-study (SIS) (PJM, 2008a), and the PJM Preliminary Stability Study for R01-R02, Bell Bend 500KV-1800MW (PSS) (PJM, 2008b.) The SIS projects the impact that BBNPP will have on the network, including a brief description of the transmission lines and substations, and the PSS shows that PJM Generator Interconnection for Bell Bend is stable for all tested conditions.

The SIS states that the work will include the construction of a new 500kV switchyard, called Susquehanna 500kV Yard 2. The yard will be breaker and a half construction with a north and south bus, and room for 4 bays. The initial construction of this yard will be bay 2 and bay 4 with bay 3 left vacant and bay 1 left open for expansion. The yard will have three new 500 kV circuit breakers, associated disconnect switches, and controls.

© 2008 UniStar Nuclear Services, LLC. All rights reserved.
COPYRIGHT PROTECTED

For both transmission lines from the BBNPP Switchyard, PPL EU will:

- Design and construct 500 kV single-circuit transmission lines on self-supporting steel H-frame poles, each line, within a 200 ft R/W, using bundled 1590 ACAR. These lines will be dedicated to only the Bell Bend NPP facility. These lines will be part of the PPL EU 500kV network, and may have network flows on them. One of the lines will be connected into the existing Susquehanna 500kV Yard at Bay 7N and the other line will be connected into the new Susquehanna 500kV Yard 2 at Bay 4S.
- Install one ½-inch extra-high-strength (EHS) overhead ground wire (OHGW) on each transmission line.
- Install one fiber optic grounding wire (OPGW) on each transmission line.

The Susquehanna-Roseland 500kV line, which is planned to be completed and in service during 2012, will be split near the new Susquehanna 500kV Yard 2, and re-terminate the lines into the yard. The renamed Roseland-Susquehanna 500kV Yard 2 line will terminate at Susquehanna 500kV Yard 2 at bay position 2N. The renamed Susquehanna 500kV Yard 2-Susquehanna 500kV Yard line will terminate at Susquehanna 500kV Yard #2 bay position 2S.

The PSS analyzed transient stability for the addition of BBNPP, and was prepared using PJM's planning criteria against the 2012 summer peak conditions load and identified design requirements necessary to maintain the reliability of the transmission system. The criteria are based upon PJM planning procedures, NERC Planning Standards, and RFC Regional Reliability Council planning criteria. For the stability analysis, light loading (50% of peak loading) is utilized with maximum generation.

The computer analysis was performed using the Siemens Power Technology International PSS/E Software. The analysis examined conditions involving loss of the largest generating unit, loss of the most critical transmission line, and multiple facility contingencies.

The results of the PSS conclude that with the additional generating capacity of BBNPP, the transmission system remains stable under the analyzed conditions, preserving the grid connection, and supporting the normal and shutdown requirements of BBNPP. There is no restrictive output limitation during an outage of any one of the two transmission lines to BBNPP switchyard. However, there is a design requirement identified in the PSS to ensure that the system remains stable (i.e., dual-pilot relaying on the renamed Susquehanna Yard 2 - Lackawanna line; both clearing times are contingent on the breaker at Lackawanna having right-of-way to close first; a reclose time of 1 second is adequate at Lackawanna.) Lackawanna will be the first substation on the renamed Susquehanna Yard 2 - Roseland 500 kV circuit.

The stability results tabulated in the conservative Bell Bend 1926MW (1800MW plus 7% stability margin) Output Fault List and Results, show that PJM Generator Interconnection R02 "Bell Bend 500kV" is stable for all tested conditions. With the additional generating capacity of BBNPP, the transmission system remains stable under the analyzed conditions, preserving the grid connection, and supporting the normal and shutdown requirements of BBNPP.

The studies were run under 2012 light load conditions, with Bell Bend at 1800 MW (versus the nominal 1600 MW) plus an additional 7% stability margin (1926 MW), and the new Susquehanna-Roseland 500kV line operating in service. The PJM Stability Study does not address the underlying need for the Susquehanna/Roseland 500 kV transmission line, which has

© 2008 UniStar Nuclear Services, LLC. All rights reserved.
COPYRIGHT PROTECTED

been separately and independently determined as part of the PJM Regional Transmission Expansion Plan (RTEP) process.

Based on the stability results, PJM recommended the installation of a maximum of a 3-cycle (3~) breakers at both ends of the renamed Susquehanna-Lackawanna 500kV line to provide adequate instantaneous clearing times.

Summary of PJM recommendations:

- 3-cycle (or less) breakers should be used at both ends of the line
- Dual-pilot relaying shall be required on the line
- Lackawanna breaker(s) shall have reclosing right of way on the Susquehanna-Lackawanna 500kV line
- A reclosing delay time of one (1) second (60~) or longer shall be used at Lackawanna

These modifications will be completed prior to initial fuel load.

A PJM System Voltage Study (PJM, 2008c) was performed to determine the maximum and minimum voltage that the switchyard can maintain without any reactive support from BBNPP. This study was prepared using the same reliability planning criteria as was used on the SIS.

The load flow was performed using the Siemens PSS/E Software. The load flow analysis included the station service loads and multiple system contingencies.

The results of the study conclude that the new BBNPP substation 500 kV bus will operate within an acceptable voltage range to satisfy PJM Planning Reliability Criteria for pre-contingency conditions (500-550 kV) and post contingency conditions (5% max. voltage drop) with BBNPP at zero reactive power output. During periods of instability, or analyzed switchyard voltages lower than the allowed limit, the transmission operator will notify BBNPP. The PJM dispatcher can request synchronous condensers and switchable capacitors to be placed in service, have operating generators supply maximum MVAR or if needed manual load dump can be initiated.

The U.S. EPR FSAR states that the plant will operate with a transmission system operating voltage range of ±10%. However, based on the above site specific voltage study BBNPP may be designed to operate with a -5%, +10% transmission system operating voltage range.

Based on the results of the System Voltage Study the grid will not be lost due to the loss of the largest generating unit (i.e., BBNPP) or the loss of the most critical transmission line or the loss of the largest load on the grid. The design (i.e., tap range & bus regulation voltage setting) of the on-load tap changers for each EAT will ensure that the downstream EPSS 6.9 kV buses will have sufficient voltage to preclude the degraded voltage protection scheme from separating the buses from the preferred power source as described in the Section 8.3.1.1.3. A site specific system calculation will be performed to confirm the design. See Chapter 16, Technical Specifications, Section 3.3.1, for specific degraded grid voltage protection settings.

Grid availability in the region over the past 26 years was also examined and it was confirmed that the system has been highly reliable with minimal forced outages. During these component outage occurrences, the transmission grid as a whole has remained available for 99.65% of the

© 2008 UniStar Nuclear Services, LLC. All rights reserved.
COPYRIGHT PROTECTED

time, with a total of 47 forced outages in the 26 year period. Most of the outages were due to relay failure, system design, or unknown. Past operating experience, covering outage information over a span of approximately 26 years, from June 8, 1981 through June 27, 2007, which includes the North-East Black Out of August 14 2003, was reviewed and the conclusion was that:

> "None of the outages involved the simultaneous outage of more than one line, and the BBNPP switchyards will be designed so that the loss of a single line does not result in the loss of power to the station auxiliary power system."

During the North-East Black Out, the transmission grid transient in the afternoon of August 14 2003, the Susquehanna Steam Electric Station did not experience any adjustment in MW load on either unit. Voltage fluctuations were observed on the grid, but they did not result in any equipment problems and both Susquehanna units responded as designed.

Failure rates of individual transmission facilities are low in the PPL territory. PPL EU has and continues to adhere to the planning and design standards associated with the bulk electric system, as identified in the PPL EU Reliability Principles & Practices, and other PJM documents. Consequently, the system is expected to be resilient to individual equipment outages cascading into widespread system interruptions. A review of grid performance verifies that there have been no widespread system interruptions. As viewed from the Susquehanna 500 kV switchyard, the PPL EU transmission grid has been available for the entire period.

The PJM grid is maintained at 60Hz. During a system underfrequency condition, the Mid-Atlantic region of PJM utilizes an automatic load shedding scheme which will drop load by 30% in 10% increments at 59.3 Hz, 58.9 Hz & 58.5 Hz.

A review of the grid frequency data for the last five years (including the Northeast Blackout of 2003) indicates that the frequency decay rate during disturbances on the Eastern Interconnection (which includes the PJM Territory) was much less than 3.5 Hz/sec. The worst decay rate during this time period occurred on August 4, 2007 and was due to a 4400 MW generation loss event (largest disturbance on the grid since August 2003 blackout) which resulted in a sustained decay rate of 0.015 Hz/sec. As such, the reactor coolant pumps are not expected to be subject to a sustained frequency decay greater than 3.5 Hz/sec.}

Failure Mode and Effects Analysis

A failure mode and effects analysis (FMEA) of the switchyard components has been performed to assess the possibility of simultaneous failure of both circuits {for BBNPP} as a result of single events, such as a breaker not operating during fault conditions, a spurious relay trip, a loss of a control circuit power supply, or a fault in a switchyard bus or transformer. This FMEA supplements the FMEA described in U.S. EPR FSAR Section 8.2.2.4.

{The 500 kV components addressed in this FMEA are as follows and a summary of the results of this FMEA is presented below.

- Transmission System
- Transmission Line Towers

© 2008 UniStar Nuclear Services, LLC. All rights reserved.
COPYRIGHT PROTECTED

- Transmission Line Conductors
- Switchyard
- Circuit Breakers
- Disconnect Switches

Transmission System Failure Mode Evaluation

The offsite power system is comprised and built with sufficient capacity and capability to assure that design limits and design conditions, relative to the offsite power system, maintain their function in the event of a postulated accident.

The transmission system associated with the BBNPP is designed and constructed so that no loss of offsite power to the 500 kV switchyard is experienced with the occurrence of any of the following events:

- Loss of one transmission circuit.
- Loss of a generator.
- A three phase fault occurring on any transmission circuit which is cleared by primary or backup relaying.

The offsite electric power system supplies at least two preferred power circuits, which will be physically independent and separate. These lines are located to minimize the likelihood of simultaneous failure under operating, postulated accident, and postulated adverse environmental conditions. The preferred circuits are maintained and connected to the BBNPP MSU transformer via the BBNPP switchyard. Transmission tower separation, line installation, and clearances are consistent with the National Electrical Safety Code (NESC), PPL EU transmission line standards, and PPL requirements. Basic tower structural design parameters, including the number of conductors, height, materials, color, and finish are consistent with PPL EU transmission line design standards. Adequate clearance will be provided to ensure that both of the Bell Bend transmission lines will not be lost in the event of a tower collapse.

Transmission Line Tower Failure Mode Evaluation

The new 500 kV towers will be designed and constructed using a transmission tower design providing clearances consistent with the National Electrical Safety Code and PPL EU engineering standards. All existing towers are grounded with either ground rods or a counterpoise ground system. All new transmission line towers will be constructed and grounded using the same methods.

Failure of any one tower or failure of any components within the tower structure, due to structural failure can at most disrupt and cause a loss of one of the preferred sources of power. The spacing of the towers between adjacent preferred sources is designed to account for the collapse of any one tower.

Therefore, one of the preferred sources of power remains available for this failure mode in order to maintain the containment integrity and other vital functions in the event of a postulated accident.

© 2008 UniStar Nuclear Services, LLC. All rights reserved.
COPYRIGHT PROTECTED

Transmission Line Conductors Failure Mode Evaluation

The new transmission lines will have conductors sized to accommodate the load as a result of BBNPP.

All new 500 kV BBNPP transmission lines will be constructed to provide clearances consistent with the National Electrical Safety Code and PPL EU engineering standards. At a minimum, all clearances for high voltage conductors above grade would be equal to or exceed present clearance minimums. High voltage conductor span lengths are engineered to establish the required installation guidelines and tensions for each line. All transmission lines crossing roads and railroads comply with the National Electrical Safety Code and PPL EU engineering standards. The new transmission lines are configured to preclude the crossing of other preferred transmission lines.

Failure of a line conductor would cause the loss of one preferred source of power but not more than one. Therefore, a minimum of one preferred source of power remains available for this failure mode in order to maintain the containment integrity and other vital functions in the event of a postulated accident.

Switchyard Failure Mode Evaluation

As indicated in Figure 8.2-2, a breaker-and-a-half/double breaker scheme is incorporated in the design of the 500 kV switchyard at BBNPP. The 500 kV equipment in the BBNPP switchyard is all rated and positioned within the bus configuration according to the following criteria in order to maintain load flow incoming and outgoing from the unit.

- Equipment continuous current ratings are chosen such that no single contingency in the switchyard (e.g., a breaker being out of for maintenance) can result in current exceeding 100% of the continuous current rating of the equipment.
- Interrupting duties are specified such that no faults occurring on the system exceed the equipment rating.
- Momentary ratings are specified such that no fault occurring on the system exceeds the equipment momentary rating.
- Voltage ratings are specified to be greater than the maximum expected operating voltage.

The breaker-and-a-half /double breaker switchyard arrangement offers the following flexibility to control a failed condition within the switchyard.

- Any faulted transmission line into the switchyard can be isolated without affecting any other transmission line.
- Either bus can be isolated without interruption of any transmission line or other bus.
- Each battery charger is connected to a separate 480 VAC distribution panel board located in the 500 kV switchyard control house.
- A primary and secondary relaying system is included on each of the two 500 kV transmission circuits from the 500 kV switchyard to the PPL EU grid. All relay schemes used for protection of the offsite power circuits and the switching station equipment include primary and backup protection features. All breakers are equipped with dual trip

© 2008 UniStar Nuclear Services, LLC. All rights reserved.
COPYRIGHT PROTECTED

coils. Each protection system (i.e. primary and secondary) which supplies a trip signal is connected to a separate trip coil.

- Instrumentation and control circuits of the main power offsite circuit (i.e., normal preferred power circuit) are separated from the instrumentation and control circuits for the reserve power circuit (i.e., alternate preferred power circuit).
- The current input for the primary and secondary transmission circuit relaying systems is supplied from separate sets of circuit breaker bushing current transformers. The potential input for the primary and secondary transmission circuit relaying systems is supplied from fused branch circuits originating from a set of coupling capacitor potential devices connected to the associated transmission circuit. The control power for the primary and secondary transmission circuit relaying systems is supplied from separate 125 VDC systems.
- A primary and secondary relay system is included for protection of each of the 500 kV switchyard buses. The zone of protection of each 500 kV bus protection system includes all the 500 kV circuit breakers adjacent to the protected bus. The primary relay is the instantaneous high impedance type used for bus protection to detect both phase and ground faults. This relay is connected in conjunction with auxiliary relays and pilot wire relaying to form a differential protection, instantaneous auxiliary tripping, and transferred tripping relay system. The secondary relay system is a duplicate of the primary relay system.
- The current input for the primary and secondary 500 kV bus relaying systems is supplied from separate sets of 500 kV circuit breaker bushing current transformers. The control power for the relay terminals of the primary and secondary 500 kV bus relaying systems located in the 500 kV switchyard control house is supplied from separate 125 VDC systems.
- A primary and secondary relay system is included on each of the circuits connecting the MSU transformer, EATs and the NATs to their respective 500 kV switchyard position. The zone of protection of the MSU associated circuit connection protection system includes two associated circuit breakers at the 500 kV switchyard and the high side bushings of the MSU transformer. The secondary relay system is a duplicate of the primary relay system.
- The current input for the primary and secondary windings of the MSU transformer, EATs and the NATs relaying systems are supplied from separate sets of bushing current transformers. The current transformers are located on the circuit breaker bushings. The control power for the relay terminals of the primary and secondary MSU circuit connection relaying systems located in the 500 kV switchyard control house are supplied from separate 125 VDC systems. The control power for the relay terminals of the primary and secondary MSU, EATs and NATs circuit connection relaying systems located at the unit relay room are supplied from the respective unit non-Class 1E 125 VDC battery systems.
- Spurious relay operation within the switchyard that trips associated protection system will not impact any primary or backup system.

Therefore, a minimum of one preferred source of power remains available for this failure mode in order to maintain the containment integrity and other vital safety functions in the event of a postulated accidents.

© 2008 UniStar Nuclear Services, LLC. All rights reserved.
COPYRIGHT PROTECTED

Circuit Breakers Failure Mode Evaluation

As indicated in Figure 8.2-2, a breaker-and-a-half/double breaker scheme is incorporated in the design of the 500 kV switchyard for BBNPP. The 500 kV equipment in the BBNPP switchyard is rated and positioned within the bus configuration according to the following criteria in order to maintain load flow incoming and outgoing from the units:

- Circuit breaker continuous current ratings are chosen such that no single contingency in the switchyard (e.g., a breaker being out for maintenance) will result in a load exceeding 100% of the nameplate continuous current rating of the breaker.
- Interrupting duties are specified such that no fault occurring on the system, operating in steady-state conditions will exceed the breaker's nameplate interrupting capability.
- Any circuit breaker can be isolated for maintenance or inspection without interruption of any transmission line or bus.
- A fault in a tie breaker or failure of the breaker to trip for a line or generator fault results only in the loss of its two adjacent circuits until it can be isolated by disconnect switches.
- A fault in a bus side breaker or failure of the breaker to trip for a line fault results only in the loss of the adjacent circuits and the adjacent bus until it can be isolated by disconnect switches.

In addition to the above described 500 kV BBNPP switchyard relaying systems, each of the 500 kV circuit breakers has a primary protection relay and a backup protection relay. The primary relay scheme is a different type or manufacture from the backup relay scheme. This will preclude common mode failure issues with the protection relays.

The primary and secondary relaying systems of the 500 kV switchyard for BBNPP are connected to separate trip circuits in each 500 kV circuit breaker. The control power provided for the 500 kV switchyard primary and secondary relaying protection and breaker control circuits consists of two independent 125 VDC systems.

Disconnect Switch(s) Failure Mode Evaluation

All 500 kV disconnect switches have a momentary rating higher than the available short circuit level. The disconnect switches are implemented into the switchyard configuration to isolate main power circuits that have failed or are out for maintenance. A failure of the disconnect switch results only in the loss of the circuit in which it is connected.

Therefore, a minimum of one preferred source of power remains available for this failure mode in order to maintain the containment integrity and other vital functions in the event of a postulated accident.

FMEA Conclusion

The finding of this FMEA analysis is that there are no single failures which would cause the simultaneous failure of both preferred sources of offsite power.}

© 2008 UniStar Nuclear Services, LLC. All rights reserved.
COPYRIGHT PROTECTED

8.2.2.5 Compliance with GDC 18

The U.S. EPR FSAR includes the following COL Item in Section 8.2.2.5:

> A COL applicant that references the U.S. EPR design certification will provide site-specific information for the station switchyard equipment inspection and testing plan.

This COL Item is addressed as follows:

{BBNPP shall establish an interface agreement that defines the interfaces and working relationships between various BBNPP site organizations and PPL EU to ensure the offsite power design requirements for the transmission facilities are maintained. The agreement defines the necessary requirements for maintenance, calibration, testing and modification of transmission lines, switchyards, and related equipment. The BBNPP and PPL EU are responsible for maintaining these facilities.

For performance of maintenance, testing, calibration and inspection, PPL EU follows its own field test manuals, vendor manuals and drawings, industry's maintenance practices and conforms to Federal Energy Regulatory Commission (FERC) requirements.

Regular inspections and maintenance of the transmission system and right-of-ways will be performed. These inspections and maintenance include patrols and maintenance of transmission line hardware on a periodic and as-needed basis. Vegetation maintenance may include tree trimming and application of herbicide. Maintenance of the proposed onsite corridors including vegetation management will be implemented under the existing PPL EU Corporation procedure.

Multiple levels of inspection and maintenance are performed on the BBNPP and Susquehanna 500 kV switchyards and associated switchyards and substation facilities. This inspection and maintenance is as follows.

- Walk-throughs and visual inspections of each substation facility including, but not limited to, reading and recording of equipment counters and meters, site temperature and conditions, and equipment condition.
- Protective relay system testing including: visual inspection, calibration, verification of current and potential inputs, functional trip testing, and correct operation of relay communication equipment.
- Oil sampling of large power transformers. Oil samples are evaluated through the use of gas chromatography and dielectric breakdown analysis.
- Several levels of inspection and maintenance for power circuit breakers. The frequency of each is a function of the number of operations and the length of time in service. External visual inspection of all functional systems, an external test, and an internal inspection. Frequency of the various maintenance/inspection efforts is based on a combination of operating history of the type of breaker, industry practice and manufacturer's recommended maintenance requirements.
- Thermography is used periodically to identify potential thermal heating issues on buses, conductors, connectors and switches.

© 2008 UniStar Nuclear Services, LLC. All rights reserved.
COPYRIGHT PROTECTED

Maintenance of battery systems is performed on a periodic basis, including quarterly visual inspections, verification of battery voltage, and verification of electrolyte level.}

8.2.2.6 Compliance with GDC 33, GDC 34, GDC 35, GDC 38, GDC 41, and GDC 44

No departures or supplements.

8.2.2.7 Compliance with 10 CFR 50.63

The U.S. EPR FSAR includes the following COL Item in Section 8.2.2.7:

> A COL applicant that references the U.S. EPR design certification will provide site-specific information that identifies actions necessary to restore offsite power and use available nearby power sources when offsite power is unavailable.

This COL Item is addressed as follows:

{BBNPP} includes two redundant SBO diesel generators designed in accordance with 10 CFR 50.63 (CFR, 2008) and Regulatory Guide 1.155 (NRC, 1988). As such, reliance on additional offsite power sources as an alternate AC source is not required. {There are no special local power sources that can be made available to re-supply the plant following a loss of the offsite power grid or an SBO. However, actions necessary to restore offsite power are identified as part of the procedures and training provided to plant operators for an SBO event described in response to the COL Item in Section 8.4.2.6.4.}

8.2.2.8 Compliance with 10 CFR 50.65(a)(4)

No departures or supplements.

8.2.2.9 Compliance with Branch Technical Position 8-3

No departures or supplements.

8.2.2.10 Compliance with Branch Technical Position 8-6

No departures or supplements.

8.2.3 REFERENCES

{**CFR, 2008.** Loss of All Alternating current Power, Title 10, Code of Federal Regulations, Part 50.63, U.S. Nuclear Regulatory Commission, 2008.

IEEE, 2000. IEEE Standard for AC High-Voltage Circuit Breakers on a Symmetrical Current Basis - Preferred Ratings and Related Required Capabilities, IEEE Std C37.06-2000, Institute of Electrical and Electronics Engineers, 2000.

NRC, 1988. Station Blackout, Regulatory Guide 1.155, U.S. Nuclear Regulatory Commission, August 1988.

PJM, 2008a. PJM Generator Interconnection R01/R02 Susquehanna 1600 MW Impact Study Re-study, DMS #500623, September 2008.

PJM, 2008b. Preliminary Stability Study for R01-R02, Bell Bend 500KV-1800MW, June 2008.

© 2008 UniStar Nuclear Services, LLC. All rights reserved.
COPYRIGHT PROTECTED

PJM, 2008c. PJM Generator Interconnection R01/R02 Susquehanna 1600 MW Voltage Study, Final, August 2008.

© 2008 UniStar Nuclear Services, LLC. All rights reserved.
COPYRIGHT PROTECTED

Table 8.2-1 {PPL EU Transmission System Circuits Connected to the BBNPP Site}

TERMINATION	NOMINAL VOLTAGE	THERMAL CAPACITY	APPROXIMATE LENGTH
Susquehanna Yard	500 kV	4260 MVA	0.7 mi (1.1 km)
Susquehanna Yard 2	500 kV	4260 MVA	1 mi (1.6 km)

© 2008 UniStar Nuclear Services, LLC. All rights reserved.
COPYRIGHT PROTECTED

Figure 8.2-1 {BBNPP Unit 3 500kV Switchyard and Transmission Line Layout}

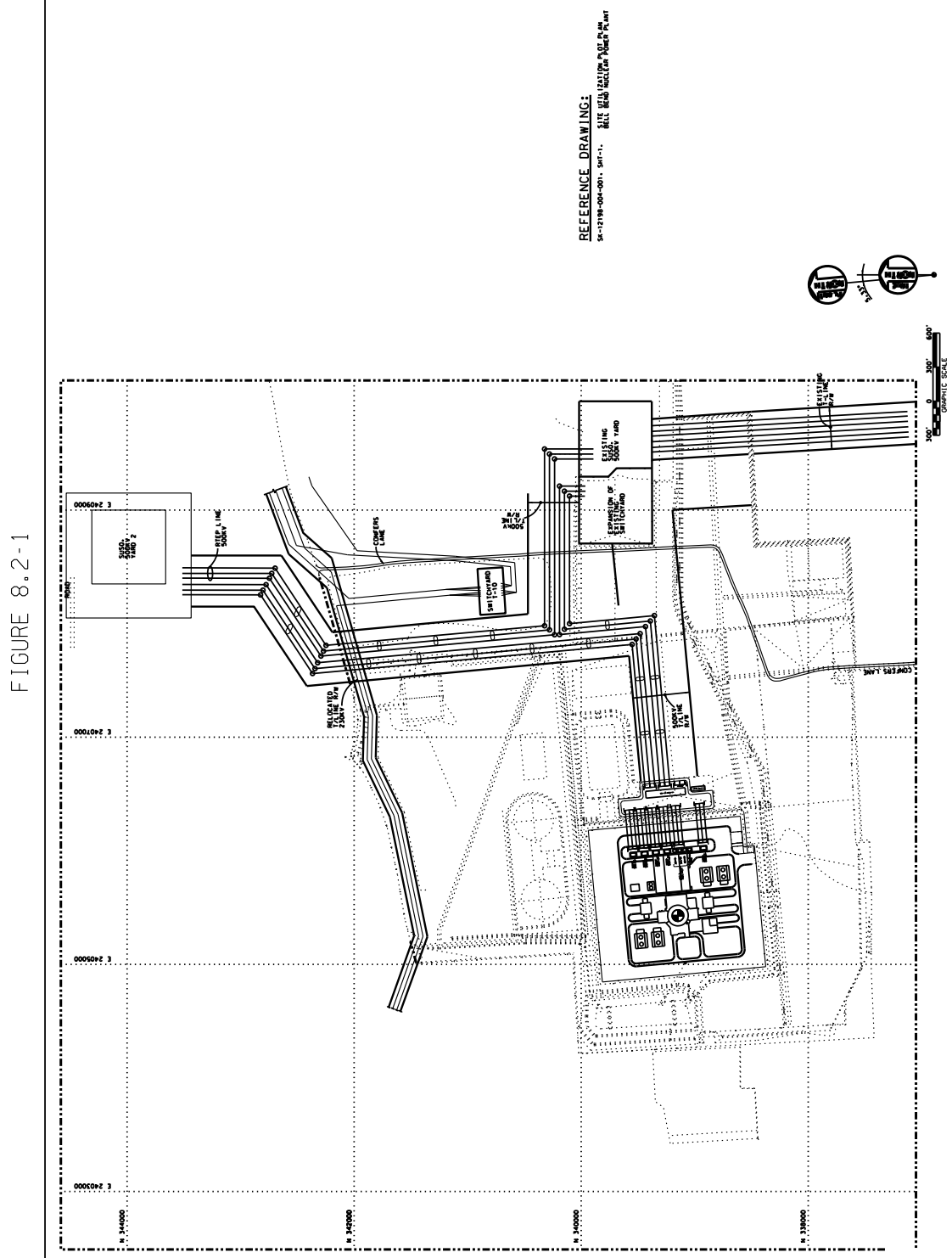

© 2008 UniStar Nuclear Services, LLC. All rights reserved.
COPYRIGHT PROTECTED

Figure 8.2-2 {BBNPP 500kV Switchyard Single Line Diagram}

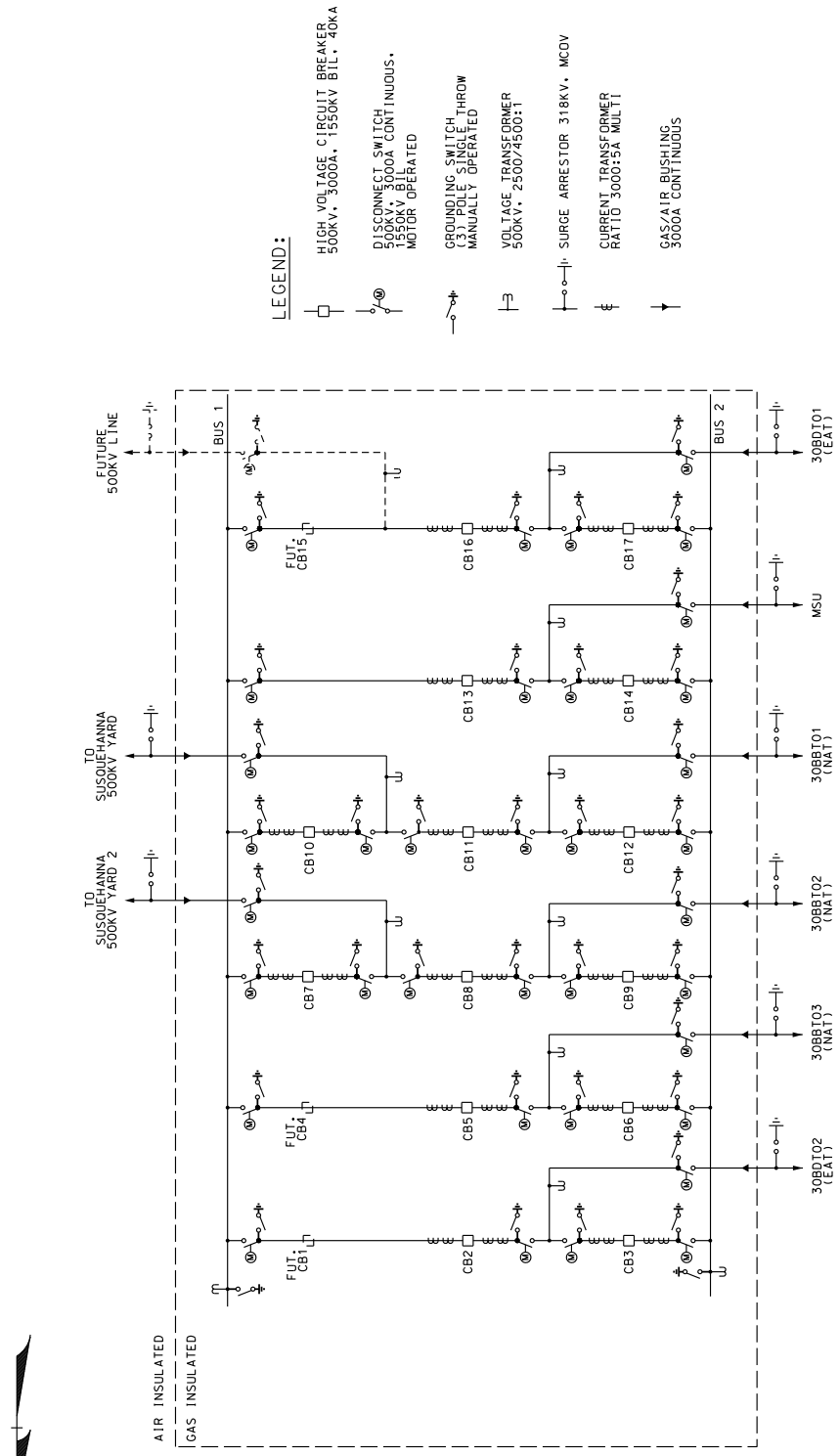

© 2008 UniStar Nuclear Services, LLC. All rights reserved.
COPYRIGHT PROTECTED

8.3 ONSITE POWER SYSTEMS

This section of the U.S. EPR FSAR is incorporated by reference with the following supplements.

8.3.1 ALTERNATING CURRENT POWER SYSTEMS

8.3.1.1 Description

Additional site-specific loads powered from the station EDGs are specified in Table 8.1-1, 8.1-2, 8.1-3, and 8.1-4. These tables supplement the information provided in U.S. EPR FSAR Tables 8.3-4, 8.3-5, 8.3-6, and 8.3-7.

Figure 8.3-1 {(Sheets 1 through 3)]and Figure 8.3-2 {(Sheets 1 through 4)} provide the site-specific modifications to the Emergency and Normal Power Supply Systems Single Line Diagrams. This information supplements U.S. EPR FSAR Figures 8.3-2 and 8.3-3. The site-specific load analysis is provided in Section 8.1.3.

Table 8.3-1 identifies the nominal ratings for the site-specific AC power system main components. This information supplements U.S. EPR FSAR Table 8.3-1.

8.3.1.1.1 Emergency Power Supply System

{There are four divisions of Emergency Power Supply System (EPSS) distribution equipment for the Essential Service Water Emergency Makeup System (ESWEMS). The EPSS distribution equipment for the ESWEMS is located in the Seismic Category ESWEMS Pumphouse. Each division is functionally independent and physically separated from the other divisions.}

The site-specific EPSS distribution switchgear and nominal bus voltages are shown in Table 8.3-2. This information supplements U.S. EPR FSAR Table 8.3-2.

8.3.1.1.2 Normal Power Supply System

{The site-specific Normal Power Supply System major distribution switchgear and nominal bus voltages are shown in Table 8.3-3. U.S. EPR Table 8.3-3 lists 6.9 kV switchgear 33BBH for Train 3 and 6.9 kV switchgear 34BBHH for Train 4. Additional 6.9 kV switchgear 33BBG for Train 3 and 6.9 kV switchgear 34BBG for Train 4 are provided in the site-specific design. U.S. EPR FSAR Table 8.3-3 also lists 480 V AC Load Centers 35BFB, 35BFC, and 35BFD for Train 5, and 480 V AC Load Centers 36BFB, 36BFC, and 36BFD for Train 6. These 480 V AC Load Centers are not utilized in the site-specific design. The standard cooling tower electrical distribution system is a conceptual design, and the changes are not considered a departure. The changes resulted from BBNPP utilizing natural draft cooling towers rather than mechanical draft cooling towers.}

8.3.1.1.3 Electric Circuit Protection and Coordination

No departures or supplements.

8.3.1.1.4 Onsite AC Power System Controls and Instrumentation

No departures or supplements.

© 2008 UniStar Nuclear Services, LLC. All rights reserved.
COPYRIGHT PROTECTED

8.3.1.1.5 Standby AC Emergency Diesel Generators

The U.S. EPR FSAR includes the following COL Item in Section 8.3.1.1.5:

> A COL applicant that references the U.S. EPR design certification will monitor and maintain EDG reliability during plant operations to verify the selected reliability level target is being achieved as intended by RG 1.155.

This COL Item is addressed as follows:

{PPL Bell Bend, LLC} shall monitor and maintain EDG reliability to verify the selected reliability level goal of 0.95 is being achieved as intended by Regulatory Guide 1.155 (NRC, 1988).

8.3.1.1.6 Station Blackout Diesel Generators

No departures or supplements.

8.3.1.1.7 Electrical Equipment Layout

The electrical distribution system components distribute power to safety-related and non-safety-related site-specific loads located throughout the site.

{The EPSS 6.9kV switchgear, 480 V AC load centers, MCCs and distributions transformers for the ESWEMS are located in the applicable division of the ESWEMS Pumphouse.}

8.3.1.1.8 Raceway and Cable Routing

{The EPSS distribution equipment for the ESWEMS is located in the applicable division of the Seismic Category I ESWEMS Pumphouse.}

8.3.1.1.9 Independence of Redundant Systems

{The EPSS distribution equipment for the ESWEMS is located in the applicable division of the Seismic Category I ESWEMS Pumphouse.}

8.3.1.1.10 Containment Electrical Penetrations

No departures or supplements.

8.3.1.1.11 Criteria for Class 1E Motors

No departures or supplements.

8.3.1.1.12 Overload Protection for Motor-Operated Safety-Related Valves

No departures or supplements.

8.3.1.1.13 Physical Identification of Safety-Related Equipment

No departures or supplements.

8.3.1.2 Analysis

No departures or supplements.No departures or supplements.

© 2008 UniStar Nuclear Services, LLC. All rights reserved.
COPYRIGHT PROTECTED

8.3.1.2.1 Compliance with GDC 2

No departures or supplements.

8.3.1.2.2 Compliance with GDC 4

No departures or supplements.

8.3.1.2.3 Compliance with GDC 5

No departures or supplements.

8.3.1.2.4 Compliance with GDC 17

{The EPSS distribution equipment for the ESWEMS is located in the applicable division of the Seismic Category I ESWEMS Makeup Water System Pumphouse. Each division is functionally independent and physically separated from the other divisions.}

8.3.1.2.5 Compliance with GDC 18

No departures or supplements.

8.3.1.2.6 Compliance with GDC 33, GDC 34, GDC 35, GDC 38, GDC 41, and GDC 44

No departures or supplements.

8.3.1.2.7 Compliance with GDC 50

No departures or supplements.

8.3.1.2.8 Compliance with 10 CFR 50.63

No departures or supplements.

8.3.1.2.9 Compliance with 10 CFR 50.65(a)(4)

No departures or supplements.

8.3.1.2.10 Compliance with 10 CFR 50.34 Pertaining to Three Mile Island Action Plan Requirements

No departures or supplements.

8.3.1.2.11 Branch Technical Positions

No departures or supplements.

8.3.1.3 Electrical Power System Calculations and Distribution System Studies for AC Systems

The U.S. EPR FSAR includes the following conceptual design information in Section 8.3.1.3: Figure 8.3-4 [[Typical Station Grounding Grid]]

The conceptual design information is addressed as follows:

© 2008 UniStar Nuclear Services, LLC. All rights reserved.
COPYRIGHT PROTECTED

{The above U.S. EPR FSAR conceptual design information, including U.S. EPR FSAR Figure 8.3-4, is applicable to BBNPP}.

8.3.2 DC POWER SYSTEMS

No departures or supplements.

8.3.3 REFERENCES

{NRC, 1988. Station Blackout, Regulatory Guide 1.155, U.S. Nuclear Regulatory Commission, August 1988. }

© 2008 UniStar Nuclear Services, LLC. All rights reserved.
COPYRIGHT PROTECTED

Table 8.3-1 {BBNPP Onsite AC Power System Component Data Nominal Values}

Component	Nominal Ratings
EPSS Distribution Transformers 31BMT05, 32BMT05 33BMT05, 34BMT05	Dry Type 60 Hz, three phase, air cooled 6.9 kV to 480 Vac 500 kVA

Table 8.3-2 {BBNPP EPSS Switchgear, Load Center, and Motor Control Center Numbering and Nominal Voltage}

Nominal Voltage Level	Division	Switchgear / Load Center / Motor Control Center
480 V MCC	1	31BNG01(1)
480 V MCC	2	32BNG01(1)
480 V MCC	3	33BNG01(1)
480 V MCC	4	34BNG01(1)

(1) Equipment located in the respective divisional pump bay of the ESWEMS Pumphouse.

Table 8.3-3 {BBNPP Normal Power Supply System Switchgear Numbering and Nominal Voltage }

Nominal Voltage Level	Train	Bus / Load Center
6.9 kV Switchgear	3	33BBG(1)
6.9 kV Switchgear	4	34BBG(1)

(1) Equipment located in the Circulating Water Makeup Intake Structure. U.S. EPR FSAR Table 8.3-3 lists 6.9 kV switchgear 33BBH for Train 3 and 6.9 kV switchgear 34BBHH for Train 4. Additional 6.9 kV switchgear 33BBG and 34BBG are provided in the site-specific design for Trains 3 and 4, respectively.

© 2008 UniStar Nuclear Services, LLC. All rights reserved.
COPYRIGHT PROTECTED

Figure 8.3-1 {BBNPP Emergency Power Supply System Single Line Drawing}

(Page 1 of 3)

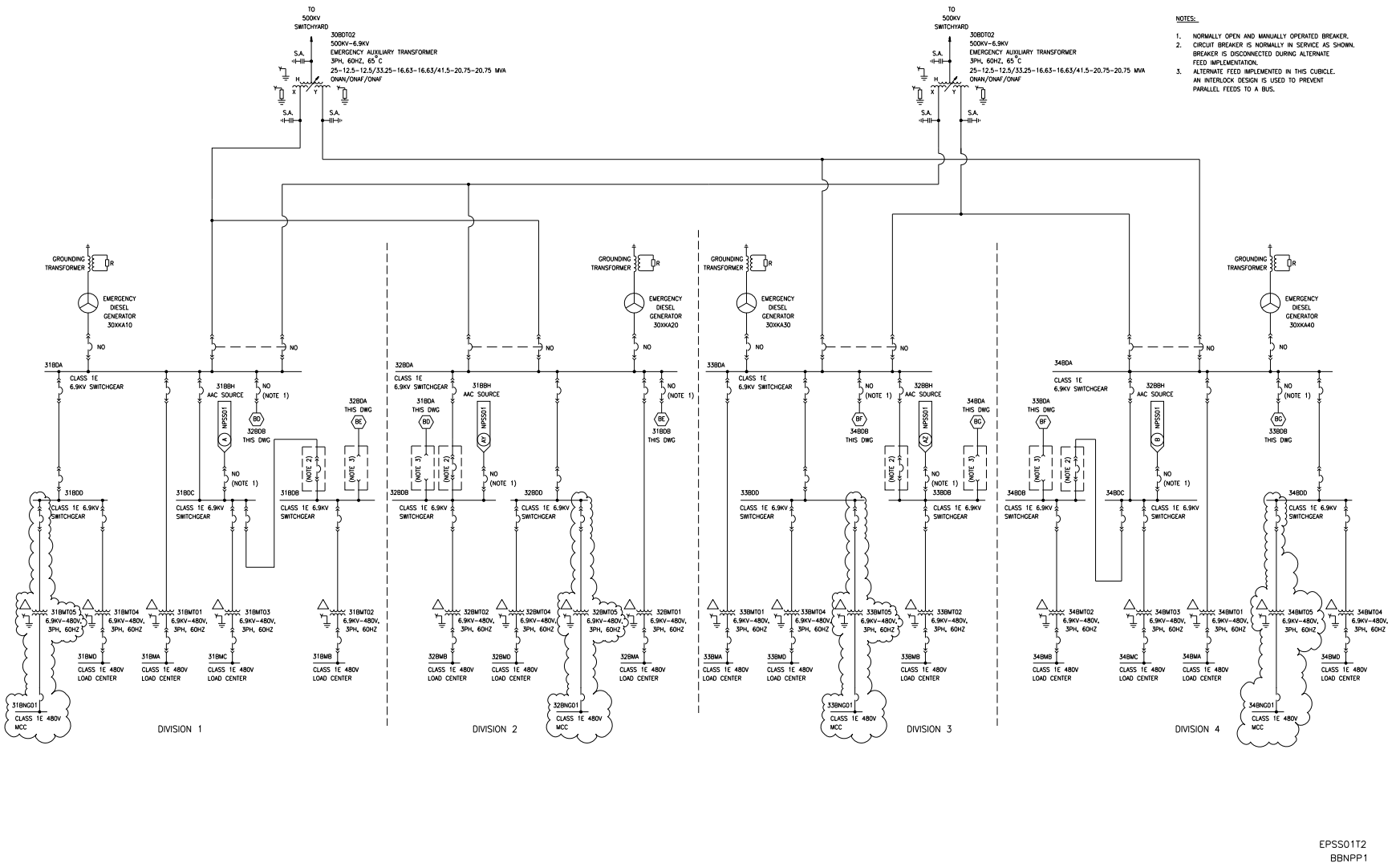

© 2008 UniStar Nuclear Services, LLC. All rights reserved.
COPYRIGHT PROTECTED

Figure 8.3-1 {BBNPP Emergency Power Supply System Single Line Drawing}
(Page 2 of 3)

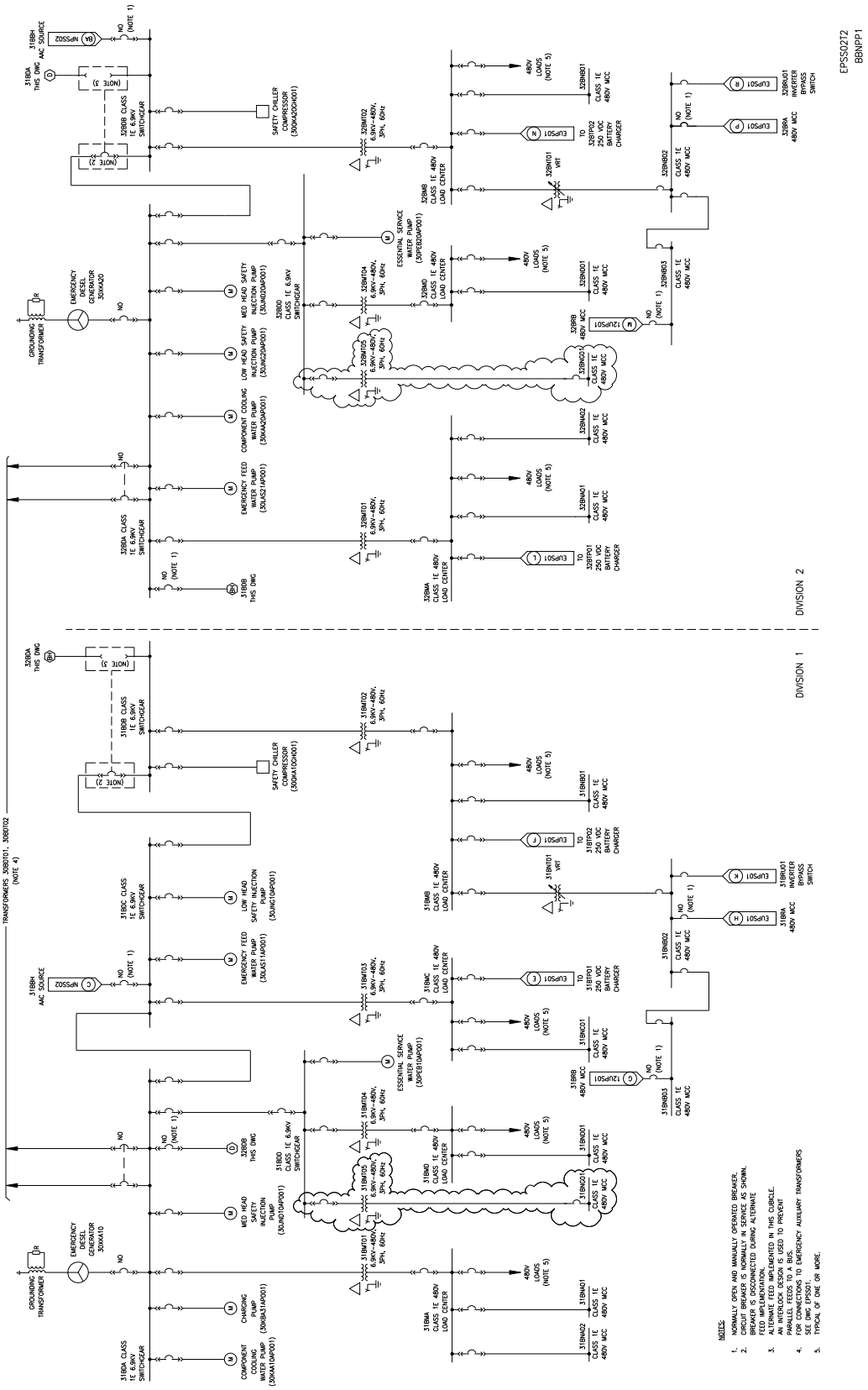

© 2008 UniStar Nuclear Services, LLC. All rights reserved.
COPYRIGHT PROTECTED

Figure 8.3-1 {BBNPP Emergency Power Supply System Single Line Drawing}
(Page 3 of 3)

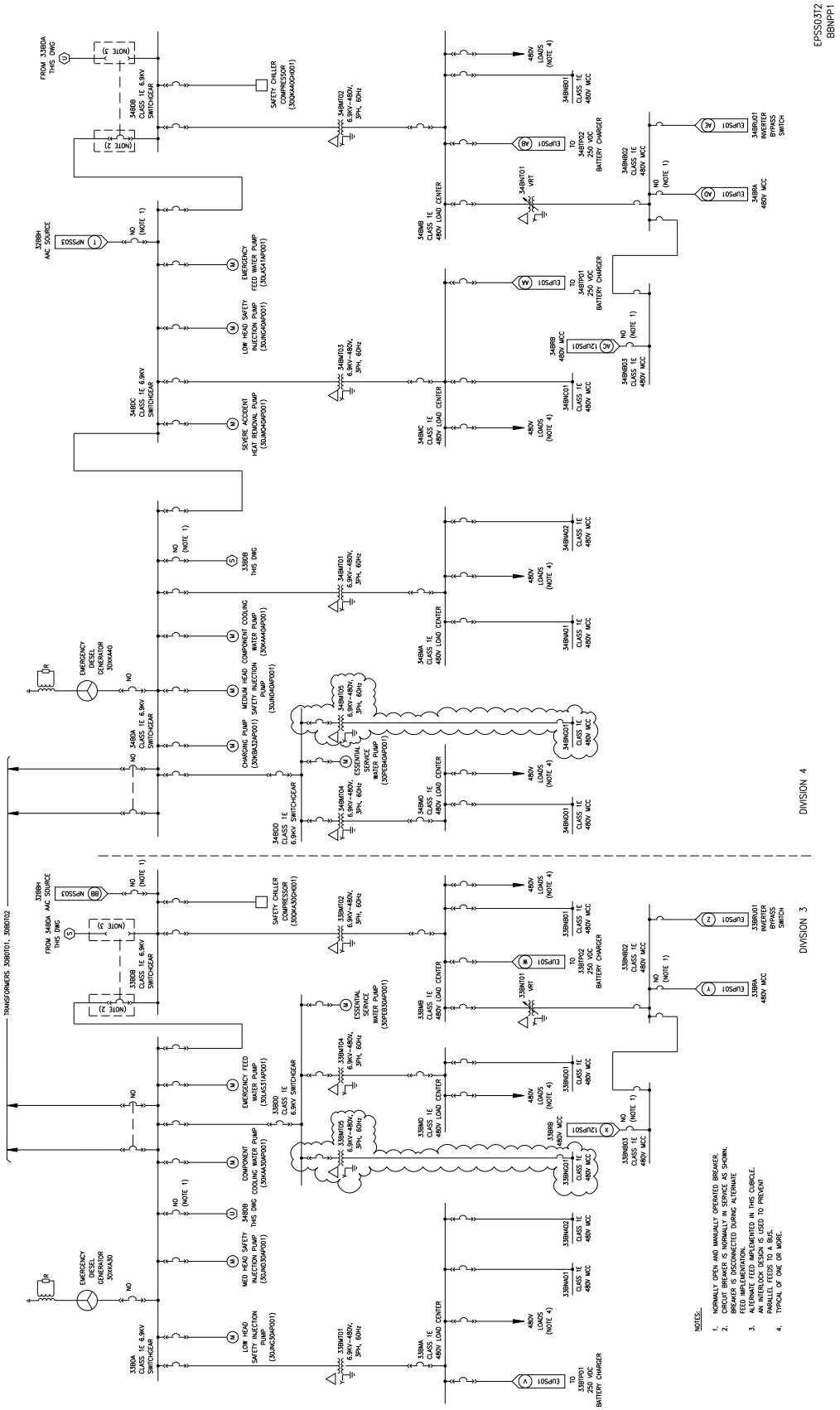

© 2008 UniStar Nuclear Services, LLC. All rights reserved.
COPYRIGHT PROTECTED

Figure 8.3-2 {BBNPP Normal Power Supply System Single Line Drawing}
(Page 1 of 4)

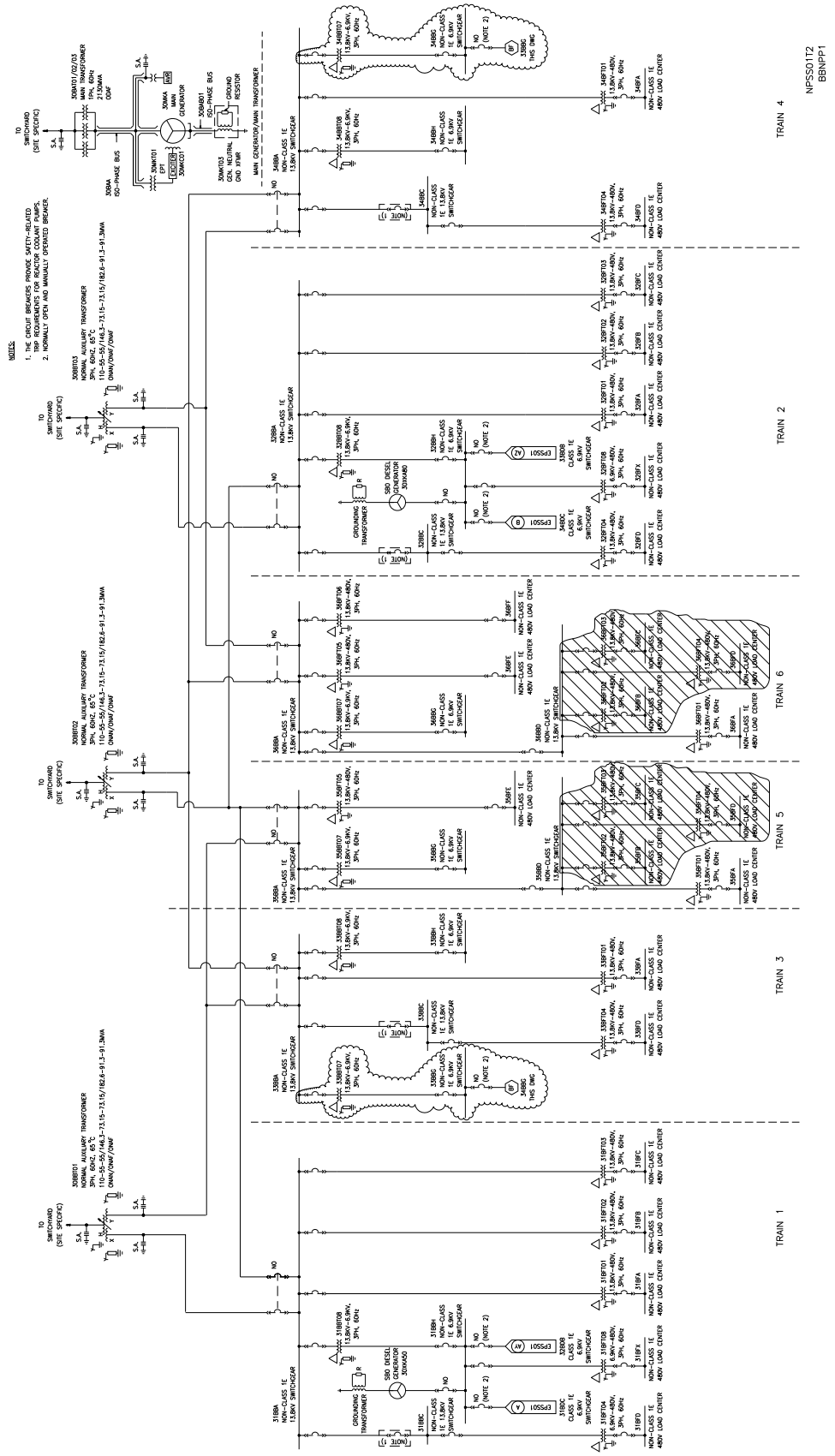
NOTES:
1. THE CIRCUIT BREAKERS PROVIDE SAFETY-RELATED TRIP FEATURES FOR REACTOR COOLANT PUMPS.
2. NORMALLY OPEN AND MANUALLY OPERATED BREAKER.
TO SWITCHYARD (SITE SPECIFIC)
S.A.
30BA01/02/03 NORMAL AUXILIARY TRANSFORMER 3PH, 60HZ 21/30MVA ODAF
30BA01 ISO-PHASE BUS
30MA01 EPT
30MC01 EXCITER
30MA01 ISO-PHASE BUS
30MA MAIN GENERATOR
GROUND RESISTOR
30MC03 GEN. NEUTRAL GND SWBR
MAIN GENERATOR/MAIN TRANSFORMER
30BB01 NORMAL AUXILIARY TRANSFORMER 3PH, 60HZ, 65°C 110-55-55/146.3-73.15-73.15/182.6-91.3-91.3MVA ONAN/ONAF/ONAF
NON-CLASS 1E 13.8KV SWITCHGEAR
NON-CLASS 1E 13.8KV SWITCHGEAR
NON-CLASS 1E 13.8KV SWITCHGEAR

Figure 8.3-2 {BBNPP Normal Power Supply System Single Line Drawing}

(Page 2 of 4)

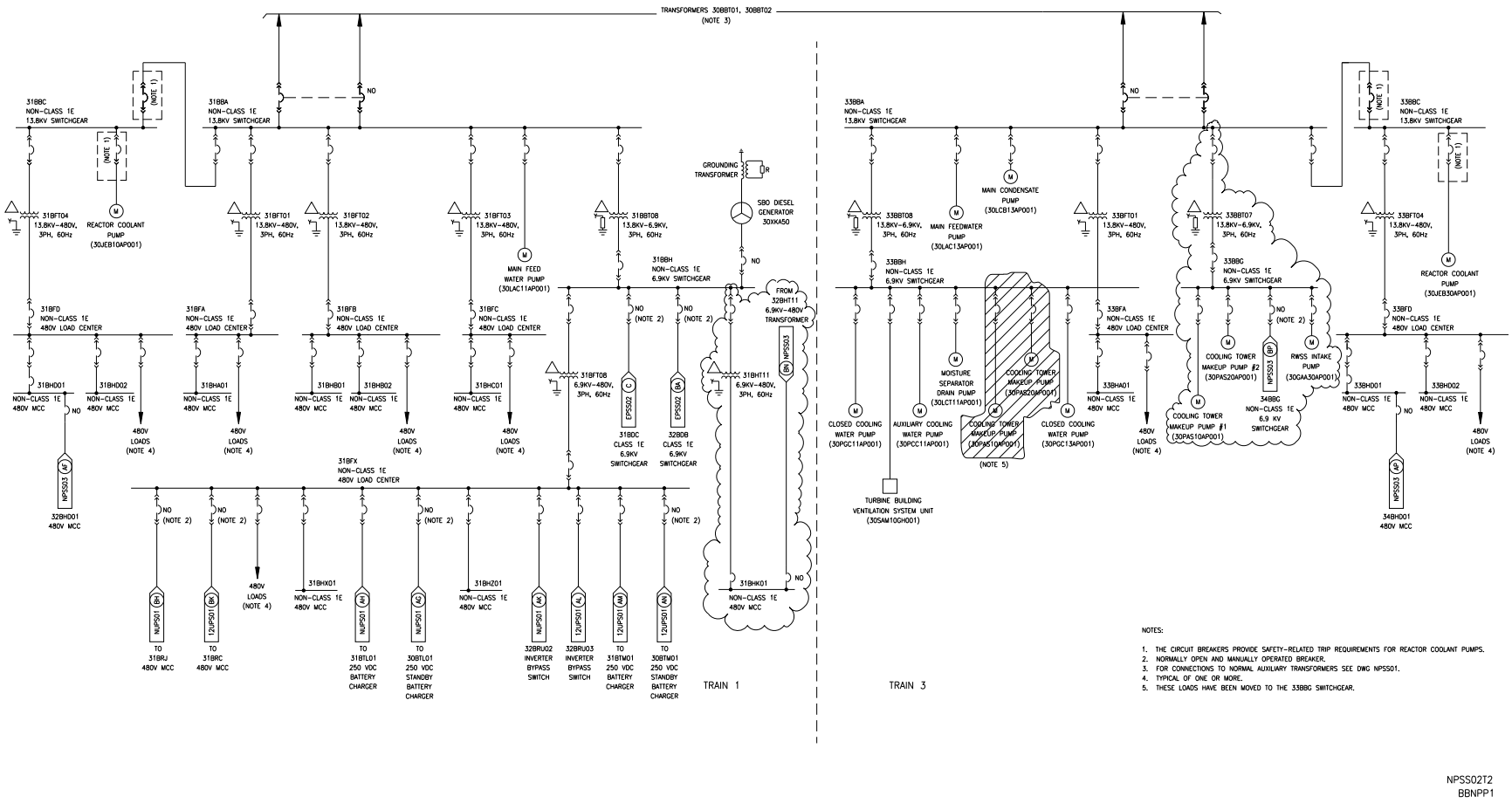

© 2008 UniStar Nuclear Services, LLC. All rights reserved.
COPYRIGHT PROTECTED

Figure 8.3-2 {BBNPP Normal Power Supply System Single Line Drawing}

(Page 3 of 4)

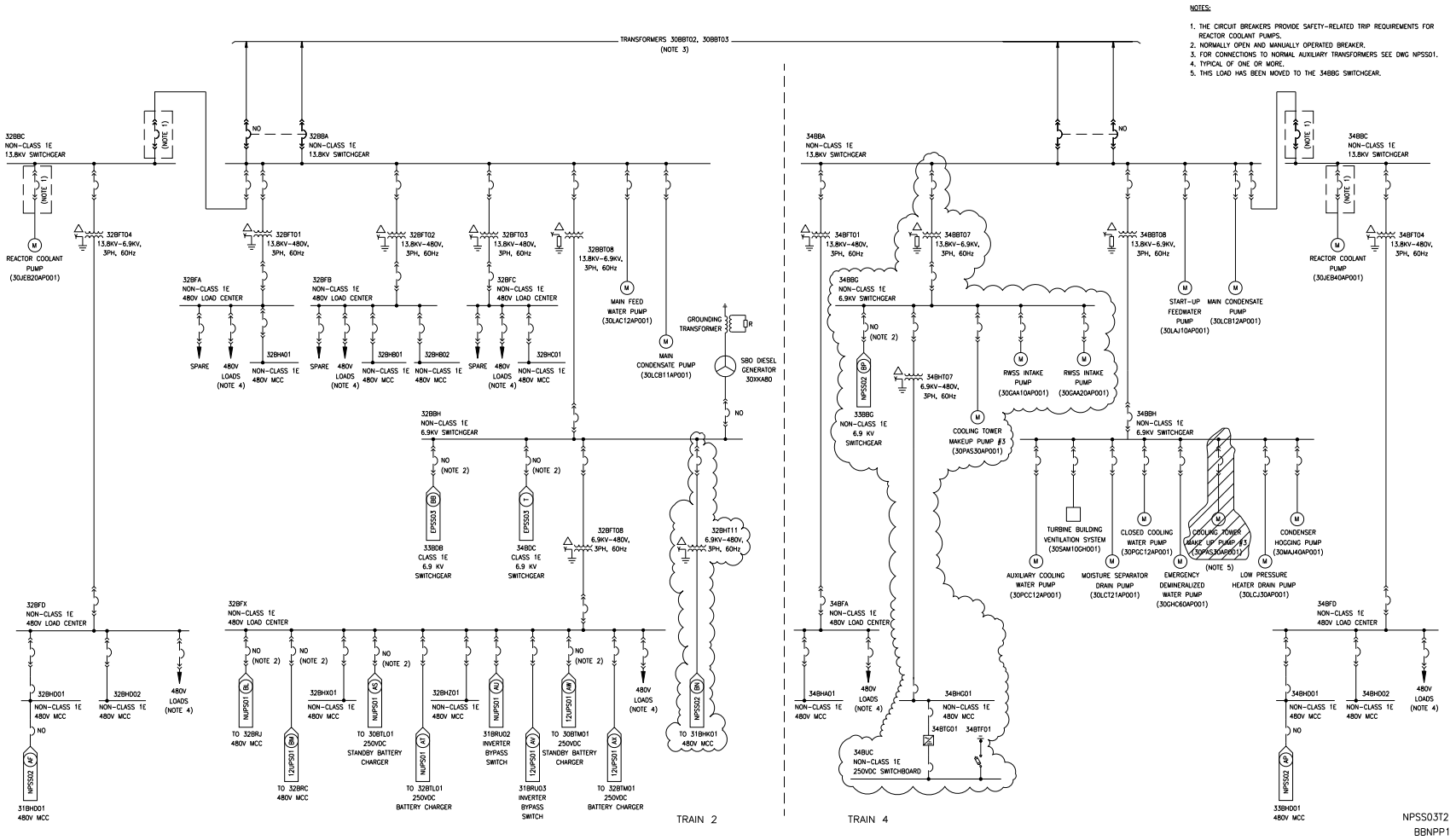

© 2008 UniStar Nuclear Services, LLC. All rights reserved.
COPYRIGHT PROTECTED

Figure 8.3-2 {BBNPP Normal Power Supply System Single Line Drawing}

(Page 4 of 4)

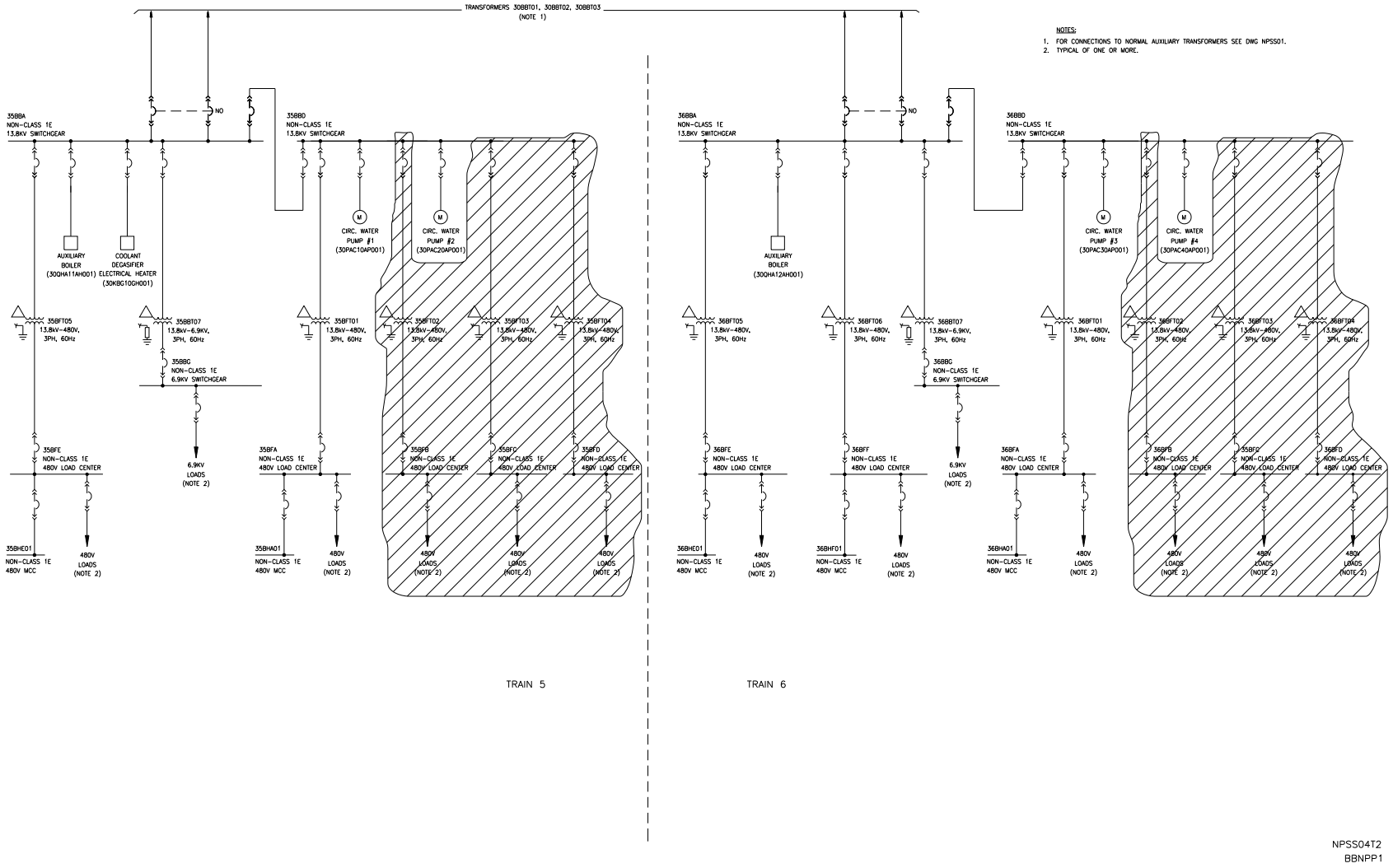

© 2008 UniStar Nuclear Services, LLC. All rights reserved.
COPYRIGHT PROTECTED

8.4 STATION BLACKOUT

This section of the U.S. EPR FSAR is incorporated by reference with the following supplements.

8.4.1 DESCRIPTION

No departures or supplements.

8.4.1.1 Station Blackout Diesel Generators

No departures or supplements.

8.4.1.2 Generator

No departures or supplements.

8.4.1.3 Alternate AC Power System Performance

The U.S. EPR FSAR includes the following COL Item in Section 8.4.1.3:

> A COL applicant that references the U.S. EPR design certification will provide site-specific information that identifies any additional local power sources and transmission paths that could be made available to resupply the power plant following a LOOP.

This COL Item is addressed as follows:

{The BBNPP switchyard will be located less than 1 mi (1.6 km) from the existing Susquehanna 500 kV switchyard. There are no special local sources that can be made available to re-supply power to the plant following loss of a grid or an SBO. However, the normal connections will include one 500 kV connection to the existing Susquehanna 500 kV switchyard and one connection to the new Susquehanna 500 kV Yard 2.}

8.4.1.4 Periodic Testing

No departures or supplements.

8.4.2 ANALYSIS

No departures or supplements.

8.4.2.1 10 CFR 50.2-Definitions and Introduction

No departures or supplements.

8.4.2.2 10 CFR 50.63-Loss of All Alternating Current Power

No departures or supplements.

8.4.2.3 10 CFR 50.65-Requirements for Monitoring the Effectiveness of Maintenance of Nuclear Power Plants

No departures or supplements.

© 2008 UniStar Nuclear Services, LLC. All rights reserved.
COPYRIGHT PROTECTED

8.4.2.4 Appendix A to 10 CFR 50, GDC for Nuclear Power Plants

No departures or supplements.

8.4.2.5 RG 1.9-Application Testing of Safety-Related Diesel Generators in Nuclear Power Plants-Revision 4

No departures or supplements.

8.4.2.6 RG 1.155-Station Blackout

No departures or supplements.

8.4.2.6.1 RG 1.155 C.3.1-Minimum Acceptable Station Blackout Duration Capability (Station Blackout Coping Duration)

U.S. EPR FSAR Section 8.4.2.6.1 includes the following option:

> A COL applicant based on site-specific coping durations may propose coping durations less than eight hours.

This option is addressed as follows:

{PPL Bell Bend, LLC} utilizes the coping analysis described in Section 8.4.2.6 of the U.S. EPR FSAR.

8.4.2.6.2 RG 1.155 C.3.2-Evaluation of Plant-Specific Station Blackout Capability (Station Blackout Coping Capability)

No departures or supplements.

8.4.2.6.3 RG 1.155 C.3.3-Modification to Cope with Station Blackout — AAC Power Sources

No departures or supplements.

8.4.2.6.4 RG 1.155 C.3.4-Procedures and Training to Cope with Station Blackout (Procedures and Training)

The U.S. EPR FSAR includes the following COL Item in Section 8.4.2.6.4:

> A COL applicant that references the U.S. EPR design certification will address the RG 1.155 position C.3.4 related to procedures and training to cope with SBO.

This COL Item is addressed as follows:

Procedures and training shall include the operator actions necessary to cope with a station blackout for at least the duration determined according to Regulatory Guide 1.155 (NRC, 1988), Regulatory Position C.3.1, and shall include the operator actions necessary to restore normal decay heat removal once AC power is restored.

Procedures shall be integrated with the plant-specific technical guidelines and emergency operating procedure program, consistent with Supplement 1 to NUREG-0737 (NRC, 1982). The

© 2008 UniStar Nuclear Services, LLC. All rights reserved.
COPYRIGHT PROTECTED

task analysis portion of the emergency operating procedure program shall include an analysis of instrumentation adequacy during a station blackout.

8.4.2.7 Quality Assurance

No departures or supplements.

8.4.3 REFERENCES

{NRC, 1982. Supplement 1 to NUREG-0737 – Requirements for Emergency Response Capability, Generic Letter 82-33, U.S. Nuclear Regulatory Commission, December 1982.

NRC, 1988. Station Blackout, Regulatory Guide 1.155, U.S. Nuclear Regulatory Commission, August 1988.}

© 2008 UniStar Nuclear Services, LLC. All rights reserved.
COPYRIGHT PROTECTED

© 2008 UniStar Nuclear Services, LLC. All rights reserved.
COPYRIGHT PROTECTED