MITSUBISHI HEAVY INDUSTRIES, LTD.
16-5, KONAN 2-CHOME, MINATO-KU
TOKYO, JAPAN

October 08, 2008

Document Control Desk
U.S. Nuclear Regulatory Commission
Washington, DC 20555-0001

Attention: Mr. Jefrey A. Ciocco,

Docket No. 52-021
MHI Ref: UAP-HF-08227

Subject: MHI's Response to US-APWR DCD RAI No.72

References: 1) "Request for Additional Information No. 72 Revision 0, SRP Section: 16 – Technical Specifications, Application Section: 16.3.8," dated September, 11, 2008

With this letter, Mitsubishi Heavy Industries, Ltd. ("MHI") transmits to the U.S. Nuclear Regulatory Commission ("NRC") a document entitled "Responses to Request for Additional Information No.72 Revision 0."

Enclosed are the responses to 11 RAIs contained within Reference 1.

Please contact Dr. C. Keith Paulson, Senior Technical Manager, Mitsubishi Nuclear Energy Systems, Inc. if the NRC has questions concerning any aspect of the submittals. His contact information is below.

Sincerely,

Y. Ogata

Yoshiki Ogata,
General Manager- APWR Promoting Department
Mitsubishi Heavy Industries, LTD.
Enclosure:

1. Response to Request for Additional Information No.72 Revision 0

CC: J. A. Ciocco
C. K. Paulson

Contact Information
C. Keith Paulson, Senior Technical Manager
Mitsubishi Nuclear Energy Systems, Inc.
300 Oxford Drive, Suite 301
Monroeville, PA 15146
E-mail: ck_paulson@mnes-us.com
Telephone: (412) 373-6466

D081
NRO

Enclosure 1

UAP-HF-08227
Docket No. 52-021

Response to Request for Additional Information No.72 Revision 0

October 2008

RESPONSE TO REQUEST FOR ADDITIONAL INFORMATION

10/8/2008

US-APWR Design Certification

Mitsubishi Heavy Industries

Docket No. 52-021

RAI NO.:	**NO.72-853 REVISION 0**
SRP SECTION:	**16 – Technical Specifications**
APPLICATION SECTION:	**16.3.8**
DATE OF RAI ISSUE:	**9/11/2008**

QUESTION NO. : 16-1

The NRC staff finds that the Design Control Document (DCD) Technical Specification (TS) Section 3.8.1, "AC Sources –Operating," is not consistent with NUREG-1431, "Standard Technical Specifications Westinghouse Plants." In that, the limiting condition for operation (LCO) 3.8.1 Condition "A" specifies Actions if one [required] offsite circuit is inoperable. However, DCD TS LCO 3.8.1 Condition "A" specifies Required Actions if only one required offsite circuit is OPERABLE. Provide your justification for not following the NUREG-1431 format in specifying Conditions for inoperable sources.

ANSWER:

MHI has provided the answer to this question in RAI #36. Please refer MHI's response to RAI #36. Also MHI has revised to following in DCD revision 1.

Condition A: One required offsite circuit inoperable.

Impact on DCD

There is no impact on the DCD.

Impact on COLA

There is no impact on the COLA

Impact on PRA

There is no impact on the PRA

RESPONSE TO REQUEST FOR ADDITIONAL INFORMATION

10/8/2008

US-APWR Design Certification

Mitsubishi Heavy Industries

Docket No. 52-021

RAI NO.:	**NO.72-853 REVISION 0**
SRP SECTION:	**16 – Technical Specifications**
APPLICATION SECTION:	**16.3.8**
DATE OF RAI ISSUE:	**9/11/2008**

QUESTION NO. : 16-2

NUREG-1431, LCO 3.8.1, If Condition A (one [required] offsite circuit is inoperable) is entered, Required Action A.2 requires actions to declare required feature(s) inoperable when its redundant required feature(s) is inoperable. Modify DCD TS LCO 3.8.1 Condition A to add Required Action A.2 and its associated completion time to be consistent with NUREG-1431 requirement or justify non-conformance.

ANSWER:

When Condition A is entered, MV-buses are supplied power from the either RAT or UAT. On condition that one of required feature composed of four trains becomes inoperable during the existence of Condition A, furthermore if a single failure of one GTG is caused, features in redundant three trains could keep their one hundred and fifty percent capacity which satisfies the required own function. Additionally on condition that one of required feature composed of two trains becomes inoperable during the existence of Condition A, if a single failure of one GTG is caused, the feature in a redundant train could keep its one hundred percent capacity which satisfies the required own function. Therefore we judged that the Required Action to declare required feature(s) inoperable was not required.

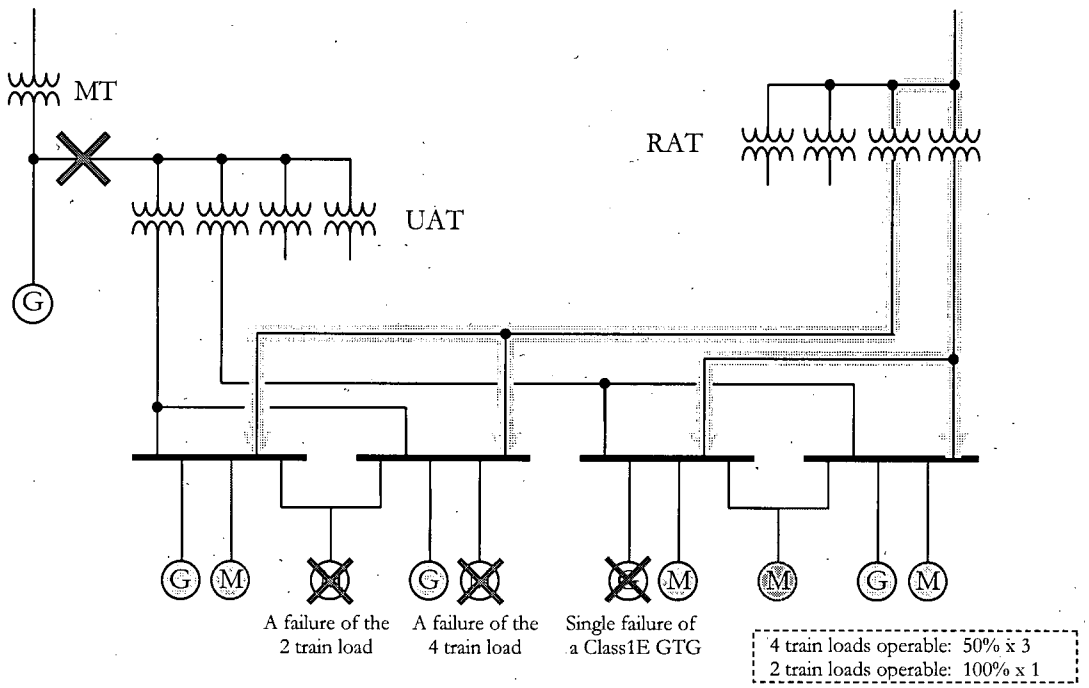

Impact on DCD

There is no impact on the DCD.

Impact on COLA

There is no impact on the COLA

Impact on PRA

There is no impact on the PRA

RESPONSE TO REQUEST FOR ADDITIONAL INFORMATION

10/8/2008

US-APWR Design Certification

Mitsubishi Heavy Industries

Docket No. 52-021

RAI NO.:	**NO.72-853 REVISION 0**
SRP SECTION:	**16 – Technical Specifications**
APPLICATION SECTION:	**16.3.8**
DATE OF RAI ISSUE:	**9/11/2008**

QUESTION NO. : 16-3

TS LCO 3.8.1b and LCO 3.8.4 of the DCD indicate that when in Modes 1, 2, 3, and 4, three of four Class 1E gas Turbine Generators (GTGs) capable of supplying the onsite Class 1E power distribution subsystem(s) and DC electrical power subsystems in three of four trains shall be available. The above indicates that one required CTG and one required DC electrical subsystems can be out-of-service for indefinite period of time. This implies that the plant operation would proceed with less than full compliment of all power sources which is inconsistent with NUREG-1431 which requires redundant trains of power sources must be available in Modes 1, 2, 3, and 4. In addition, the above configuration reduces the defense-in-depth features provided in APWR design. Provide your justification for starting the plant with three of four Class 1E GTGs and three of the DC power subsystems available in Modes 1, 2, 3, and 4.

ANSWER:

The technical specification LCOs of the US-APWR have been decided deterministically based on 10 CFR 50.36 which mentions that LCOs are the lowest functional capacity or performance level of equipment required safe operation of the facility.
LCOs are determined in consideration of a hundred percent capacity which satisfies the required own function and a single failure criterion assumed in design bases accident analysis.

NUREG-1431 is based on the safety system composed of two trains which have a hundred percent capacity, respectively. Therefore safety functions are satisfied by one train (a hundred percent capacity). In consideration of a hundred percent capacity and a single failure, the lowest functional capacity (LCO) is two trains.

While the technical specification LCO 3.8.1 and LCO 3.8.4 of the US-APWR is based on the safety system which composed of four trains (fifty percent capacity of each train), and the safety functions is satisfied by two trains. In consideration of a hundred percent capacity and a single failure, the lowest functional capacity (LCO) is three trains in the US-APWR.

Therefore LCO 3.8.1 and LCO 3.8.4 of the US-APWR are not inconsistent with NUREG-1431 from the viewpoint of 10 CFR 50.36.

In addition, we should notice that the technical specification LCOs of the US-APWR are the lowest functional capacities to provide the minimum requirement in the operation and it does not mean that out-of service for indefinite period of time is allowed to one GTG or one DC electrical subsystem. MHI understands that indefinite out-of service is equal to the permanent change to the plant and thus subject to 10CFR50.59. The maintenance activity must be provided for each train equally to keep the function of all four trains properly. MHI also understands that 10CFR50.59 should be applied in accordance with NEI 96-07 Rev.1* in case that a temporary alteration in support of the maintenance is expected to be in effect during at-power operations for more than 90 days. Therefore MHI thinks that the level of the defense-in-depth features in APWR would not be degraded in an actual sense.

* NEI 96-07, Revision 1, "Guidelines for 10CFR50.59 Implementation"

Impact on DCD

There is no impact on the DCD.

Impact on COLA

There is no impact on the COLA

Impact on PRA

There is no impact on the PRA

RESPONSE TO REQUEST FOR ADDITIONAL INFORMATION

10/8/2008

US-APWR Design Certification

Mitsubishi Heavy Industries

Docket No. 52-021

RAI NO.:	**NO.72-853 REVISION 0**
SRP SECTION:	**16 – Technical Specifications**
APPLICATION SECTION:	**16.3.8**
DATE OF RAI ISSUE:	**9/11/2008**

QUESTION NO. : 16-4

The NRC staff notes that throughout the TS LCOs of the DCD, Required Actions for offsite power, emergency CTGs and DC electrical power subsystems invokes TS 5.5.18, "Configuration Risk Management Program," if one of the required power systems is not recovered within the required Completion Time. Although, the application of Configuration Risk Management Program (CRMP) was approved for South Texas as a pilot plant, such an application for your facility was not approved and in particular offsite power system was not included in the pilot program. Provide your justification for using Risk-Informed Completion Times, in the DCD TS for Electrical Power Systems.

ANSWER:

In the Revision 1 of the US-APWR DCD, only the framework of Risk Managed Technical Specification (RMTS) is provided. Whether actual plant applies RMTS will be decided by COL Applicant. When actual plant applies RMTS, COL Applicant has responsibility to develop the appropriate PRA model for applying RMTS to offsite power system.

Impact on DCD

There is no impact on the DCD.

Impact on COLA

There is no impact on the COLA

Impact on PRA

There is no impact on the PRA

RESPONSE TO REQUEST FOR ADDITIONAL INFORMATION

10/8/2008

US-APWR Design Certification

Mitsubishi Heavy Industries

Docket No. 52-021

RAI NO.:	**NO.72-853 REVISION 0**
SRP SECTION:	**16 – Technical Specifications**
APPLICATION SECTION:	**16.3.8**
DATE OF RAI ISSUE:	**9/11/2008**

QUESTION NO. : 16-5

NUREG-1431, LCO 3.8.1C, If Condition C (both [required] offsite circuits are inoperable) is entered, Required Action C.1 requires action to declare required feature(s) inoperable when it's redundant required feature(s) is inoperable. Modify DCD TS LCO 3.8.1 Condition "C" to add Required Action C1 and its associated completion time to be consistent with NUREG-1431 requirement or justify non-conformance.

ANSWER:

When Condition C is entered, it is assumed that MV-buses are supplied power from each Class 1E GTG. On condition that one of required feature composed of four trains becomes inoperable during the existence of Condition C, if a single failure of one GTG is caused, features in redundant three trains could keep their one hundred percent capacity which satisfies the required own function. And on condition that one of required feature composed of two trains becomes inoperable during the existence of Condition C, if a single failure of one GTG is caused, the feature in the other redundant train could keep its one hundred percent capacity which satisfies the required own function. Therefore MHI judged that a Required Action to declare required feature(s) inoperable was not required.

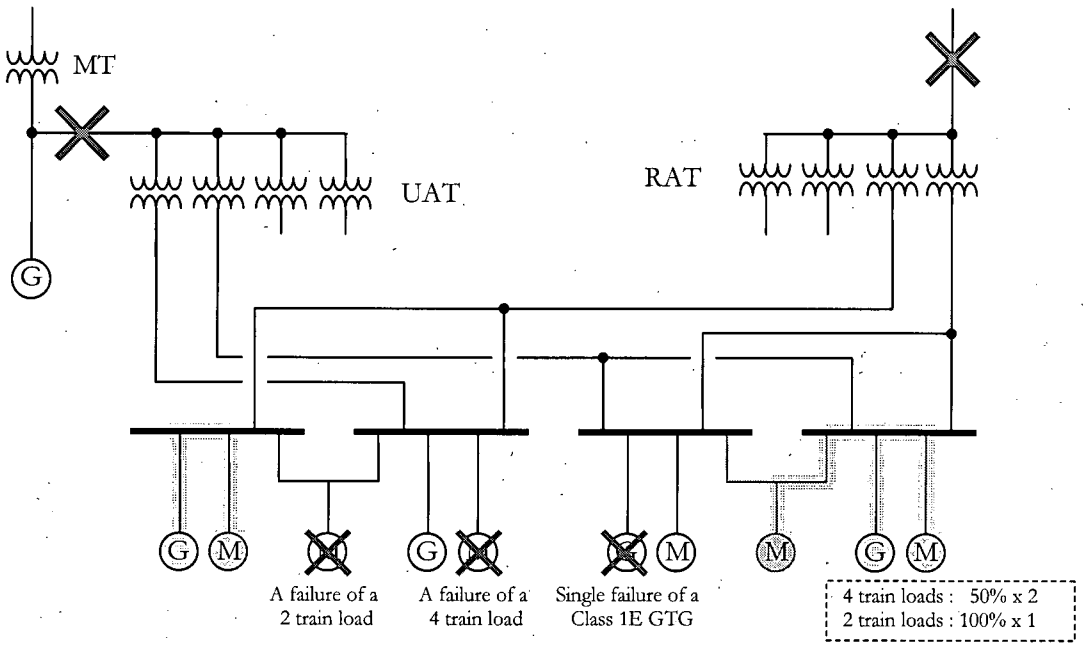

Impact on DCD

There is no impact on the DCD.

Impact on COLA

There is no impact on the COLA

Impact on PRA

There is no impact on the PRA

RESPONSE TO REQUEST FOR ADDITIONAL INFORMATION

10/8/2008

US-APWR Design Certification

Mitsubishi Heavy Industries

Docket No. 52-021

RAI NO.:	**NO.72-853 REVISION 0**
SRP SECTION:	**16 – Technical Specifications**
APPLICATION SECTION:	**16.3.8**
DATE OF RAI ISSUE:	**9/11/2008**

QUESTION NO. : 16-6

NUREG-1431, TS LCO 3.8.1D, contains a Note that states, "Enter applicable Conditions and Required Actions of LCO 3.8.9," to LCO 3.8.1D, "Distribution Systems - Operating," when Condition D is entered with no AC power source to any train." Modify DCD TS LCO 3.8.1D to include the above note or justify non-conformance.

ANSWER:

Each Class 1E bus can be supplied power from two offsite power systems and one Class 1E GTG. Even if an offsite power system and a GTG are inoperable, the Class 1E bus is not in "no AC power source" because an offsite power system is available. Therefore TS LCO 3.8.1 Condition does not require the "Enter applicable Conditions and Required Actions of LCO 3.8.9,"

Impact on DCD

There is no impact on the DCD.

Impact on COLA

There is no impact on the COLA

Impact on PRA

There is no impact on the PRA

RESPONSE TO REQUEST FOR ADDITIONAL INFORMATION

10/8/2008

US-APWR Design Certification

Mitsubishi Heavy Industries

Docket No. 52-021

RAI NO.:	**NO.72-853 REVISION 0**
SRP SECTION:	**16 – Technical Specifications**
APPLICATION SECTION:	**16.3.8**
DATE OF RAI ISSUE:	**9/11/2008**

QUESTION NO. : 16-7

DCD TS LCO 3.8.1, Condition E, requires if one or less required Class 1E GTGs are operable then restore two required Class 1E GTGs in two trains to operable status within two hours. Define 'one or less required Class 1E GTGs operable'. Also, define 'one or less required ac sources operable' in LCO 3.8.1, Condition H.

ANSWER:

MHI has modified these descriptions to the following in DCD revision 1.

Condition E: Two or more required Class 1E GTGs inoperable.

Condition H: Two offsite circuits and one or more required GTGs inoperable.
OR
One offsite circuit and two or more required GTGs inoperable.

Impact on DCD

There is no impact on the DCD.

Impact on COLA

There is no impact on the COLA

Impact on PRA

There is no impact on the PRA

RESPONSE TO REQUEST FOR ADDITIONAL INFORMATION

10/8/2008

US-APWR Design Certification

Mitsubishi Heavy Industries

Docket No. 52-021

RAI NO.:	**NO.72-853 REVISION 0**
SRP SECTION:	**16 – Technical Specifications**
APPLICATION SECTION:	**16.3.8**
DATE OF RAI ISSUE:	**9/11/2008**

QUESTION NO. : 16-8

DCD TS Surveillance Requirement (SR) 3.8.1.9 requires, if surveillance is performed with Class 1E CTG synchronized with offsite power, it shall be performed at a power factor ≤ 0.9. Confirm that 0.9 is the designed load power factor that the CTG will experience during accident loading.

ANSWER:

The load power factor does not exceed 0.9. In DCD Table 8.3.1.4 in Chapter 8, the average of load power factors during accident loading is approximately 0.85. Therefore we described load power factor ≤ 0.9 in DCD TS Surveillance Requirement (SR) 3.8.1.9.

Impact on DCD

There is no impact on the DCD.

Impact on COLA

There is no impact on the COLA

Impact on PRA

There is no impact on the PRA

RESPONSE TO REQUEST FOR ADDITIONAL INFORMATION

10/8/2008

US-APWR Design Certification

Mitsubishi Heavy Industries

Docket No. 52-021

RAI NO.:	**NO.72-853 REVISION 0**
SRP SECTION:	**16 – Technical Specifications**
APPLICATION SECTION:	**16.3.8**
DATE OF RAI ISSUE:	**9/11/2008**

QUESTION NO. : 16-9

DCD TS SR 3.8.1.12 requires verification that each Class 1E GTG's non-critical automatic trips are bypassed on actual or simulated loss of voltage signal on the emergency bus concurrent with an actual or simulated ESF actuation signal. However, the SR does not specify the non-critical trips. NUREG-1431, SR 3.8.13, requires verification that each diesel generator's automatic trips are bypassed on [actual or simulated loss of voltage signal on the emergency bus concurrent with an actual or simulated ESF actuation signal] except:

a. Engine overspeed,
b. Generator differential current,
c. [Low lube oil pressure],
d. [High crankcase pressure], and
e. [Start failure relay.]

Modify DCD TS SR 3.8.1.12 to be consistent with NUREG requirement or justify nonconformance.

ANSWER:

Protective devices of Class 1E GTG's non-critical automatic trips are different from protective devices of Class 1E DG's non-critical automatic trips. In accordance with Chapter 8, their protective devices are following;

a. Overspeed
b. Generator differential current, and
c. High exhaust gas tenperature

Impact on DCD

Above protective devices will be added to SR 3.8.1.12 in DCD Revision 2.

Impact on COLA

Above protective devices will be added to COLA.

Impact on PRA

There is no impact on the PRA

RESPONSE TO REQUEST FOR ADDITIONAL INFORMATION

10/8/2008

US-APWR Design Certification

Mitsubishi Heavy Industries

Docket No. 52-021

RAI NO.:	**NO.72-853 REVISION 0**
SRP SECTION:	**16 – Technical Specifications**
APPLICATION SECTION:	**16.3.8**
DATE OF RAI ISSUE:	**9/11/2008**

QUESTION NO. : 16-10

DCD TS LCO 3.8.4, Required Action A.2 and LCO 3.8.5 Required Action A.2, specify a Completion Time of 'once per 24 hours' to verify battery float current ≤ (5) amps when one required battery charger is inoperable. This is not consistent with NUREG -1431 LCO 3.8.4, Required Action A.2 which specifies a Completion Time of 'once per 12 hours' to verify battery float current ≤ (2) amps when one required battery charger is inoperable. Justify the difference in Completion Times as well as the battery float current values from the NUREG-1431 values.

ANSWER:

Based on the design calculation on the US-APWR battery systems, the battery in one train has about 5000 ampere hours. We have judged that battery float current 5 amperes are reasonable in the view of the battery capacity. In the matter of Completion Time, MHI decided 24 hours in accordance with IEEE Std. 946 (IEEE Recommended Practice for the Design of DC Auxiliary Power Systems for Generating Stations). IEEE Std. 946 recommends selecting 8 hour to 24 hour as the time to recharge the battery to approximately 95% of capacity (in hours).

Impact on DCD

There is no impact on the DCD.

Impact on COLA

There is no impact on the COLA

Impact on PRA

There is no impact on the PRA

RESPONSE TO REQUEST FOR ADDITIONAL INFORMATION

10/8/2008

US-APWR Design Certification

Mitsubishi Heavy Industries

Docket No. 52-021

RAI NO.:	**NO.72-853 REVISION 0**
SRP SECTION:	**16 – Technical Specifications**
APPLICATION SECTION:	**16.3.8**
DATE OF RAI ISSUE:	**9/11/2008**

QUESTION NO. : 16-11

DCD LCO 3.8.6, Required Action B.2, specify a Completion Time of 'once per 24 hours' to restore battery float current to ≤ (5) amps when one battery on one required train with float current > (5) amps. This is not consistent with NUREG -1431 LCO 3.8.6, Required Action B.2 which specifies a Completion Time of 'once per 12 hours' to verify battery float current > (2) amps when One [or two] batter[y][ies on one train] with float current > [2] amps. Justify the difference in Completion Times as well as the battery float current values from the NUREG-1431 values.

ANSWER:

Based on the design calculation on the US-APWR battery systems, the battery in one train has about 5000 ampere hours. We have judged that battery float current 5 amperes are reasonable in the view of the battery capacity. In the matter of Completion Time, MHI decided 24 hours in accordance with IEEE Std. 946 (IEEE Recommended Practice for the Design of DC Auxiliary Power Systems for Generating Stations). IEEE Std. 946 recommends selecting 8 hour to 24 hour as the time to recharge the battery to approximately 95% of capacity (in hours).

Impact on DCD

There is no impact on the DCD.

Impact on COLA

There is no impact on the COLA

Impact on PRA

There is no impact on the PRA

This completes MHI's response to the NRC's question.