Duke Energy®
Carolinas

JAMES R. MORRIS, VICE PRESIDENT

Duke Energy Carolinas, LLC
Catawba Nuclear Station
4800 Concord Road / CN01VP
York, SC 29745

803-701-4251
803-701-3221 fax

October 9, 2008

U.S. Nuclear Regulatory Commission
Attention: Document Control Desk
Washington, D.C. 20555

Subject: Duke Energy Carolinas, LLC (Duke)
Catawba Nuclear Station, Unit 2
Docket Number 50-414
Request for Relief Number 08-CN-001
Limited Weld Examinations During the End-of-Cycle 15 Refueling Outage

Pursuant to 10 CFR 50.55a(g)(5)(iii), please find attached Request for Relief 08-CN-001. This request for relief is associated with limited weld examinations during inservice inspection activities for the subject refueling outage.

The attachment to this letter contains all technical information necessary in support of this request for relief. Duke is requesting NRC review and approval of this request at your earliest convenience.

There are no regulatory commitments contained in this letter or its attachment.

If you have any questions concerning this material, please call L.J. Rudy at (803) 701-3084.

Very truly yours,

James R. Morris

LJR/s

Attachment

A047
NRR

xc (with attachment):

L.A. Reyes, Regional Administrator
U.S. Nuclear Regulatory Commission, Region II
Atlanta Federal Center
61 Forsyth St., SW, Suite 23T85
Atlanta, GA 30303

A.T. Sabisch, Senior Resident Inspector
U.S. Nuclear Regulatory Commission
Catawba Nuclear Station

J.F. Stang, Jr., Senior Project Manager (addressee only)
U.S. Nuclear Regulatory Commission
Mail Stop 8-G9A
Washington, D.C. 20555-0001

bxc (with attachment):

R.D. Hart
L.J. Rudy
M.A. Pyne
E.B. Miller, Jr.
K. Douthit
RGC File
Document Control File 801.01
ELL-EC050
NCMPA-1
NCEMC
PMPA

Attachment

Request for Relief 08-CN-001

Relief Request 08-CN-001

Proposed Relief in Accordance with 10 CFR 50.55a(g)(5)(iii)

Inservice Inspection Impracticality

Duke Energy Corporation

Catawba Nuclear Station - Unit 2 (EOC-15)

Third 10-Year Interval - Inservice Inspection Plan

Interval Start Date = 10-15-2005 Interval End Date = 8-19-2016

This Relief Request has 17 welds for which relief is being sought.

The ID's, Item/Summary Numbers, and Attachments for the 17 welds are as follows:

List Number	Weld ID	Item/Summary Number	Attachment
1.	2ARHRHX-5-9	C2.C1.10.0007	A
2.	2RPV-101-104A	C2.B1.22.0001	B
3.	2PZR-W2	C2.B3.110.0002	C
4.	2PZR-W4C	C2.B3.110.0006	D
5.	2NC25-5	C2.B9.11.0037	E
6.	2NC43-13	C2.B9.11.0052	F
7.	2NI59-1	C2.B9.11.0099	G
8.	2ELDHX-HD-FLG	C2.C1.20.0002	H
9.	2VCT-LH-SH	C2.C1.20.0019	I
10.	2BNSHX-2B-51C	C2.C1.30.0008	J
11.	2BNSHX-2A-50	C2.C1.30.0009	K
12.	2ND5-5	C2.C5.11.0071	L
13.	2ND5-8	C2.C5.11.0074	M
14.	2NS32-1	C2.C5.11.0146	N
15.	2NV14-2	C2.C5.21.0053	O
16.	2NV14-3	C2.C5.21.0054	P
17.	2NV15-1	C2.C5.21.0057	Q

Designated Attachments contain the examination data for each of these seventeen welds.

Items in this relief request were examined during August, September, or October of 2007.

I. ASME Code Component Affected

Heat Exchanger
Residual Heat Removal System
Shell to Flange Weld
Weld ID = 2ARHRHX-5-9
Item Number/Summary Number = C2.C1.10.0007

II. Applicable Code Edition and Addenda

ASME Boiler and Pressure Vessel Code, Section XI - 1998 Edition thru the 2000 Addenda

III. Applicable Code Requirement

IWC-2500, Table IWC-2500-1, Examination Category C-A, Item Number C1.10
Fig. IWC-2500-1 (a), 100% Volume Coverage of Examination Volume A-B-C-D

IV. Impracticality of Compliance

The material is stainless steel. This weld has a wall thickness of 0.875 inches and a diameter of 44.0 inches.

During the radiographic examination of this weld, 60.9% coverage of the required examination volume was obtained due to the outside geometry of the Shell-to-Flange weld, the interior vessel T-Divider Plate configuration and the Inlet and Outlet Nozzle stiffener plates. The only alternative volumetric examination that would provide examination coverage of 90% or better would be ultrasonics (UT) from the vessel ID. This type of ID volumetric exam would require the vessel to be separated at the flange to allow the UT examiner access to the vessel ID. Component engineering has indicated that there are no known future opportunities for accessing the inside of heat exchanger 2A. There were no recordable indications found during the examination of this weld.

The Catawba Inservice Inspection Plan allows the use of Code Case N-460, which requires greater than 90% volumetric coverage of examination volume A-B-C-D. Therefore, the available coverage will not meet the criteria of this Code Case.

V. Proposed Alternative and Basis for Use

There are no alternative welds to select in Examination Category C-A, to meet Code requirements. Due to the ASME Section XI Code requirement to inspect 100% of the required exams in Examination Category C-A, Weld ID No. 2ARHRHX-5-9 cannot be deleted from the examination schedule.

Ultrasonic as an alternative is not feasible because access is not available. No alternative examinations are planned for the weld during the current inspection interval.

VI. Duration of Proposed Alternative

This request is for the duration of the third inservice inspection interval, currently scheduled to end on August 19, 2016.

VII. Justification for Granting Relief

Radiographic examination of the weld for item number C2.C1.10.0007 was conducted using personnel qualified in accordance with ASME Section XI of the 1998 Edition with the 2000 Addenda. Radiographic procedures complied with the requirements of ASME Section V, Article 2 of the 1998 Edition with the 2000 Addenda.

IWB-2500, Table IWB-2500-1, Examination Category B-P System Leakage Tests and VT-2 visual examinations performed each refueling outage provide adequate assurance of pressure boundary integrity.

In addition to the above Code required examinations (volumetric and pressure test), there are other activities which provide confidence that, in the event that leakage did occur through this weld, it would be detected and proper action taken. Specifically, visual observations performed during operator rounds provide additional assurance that any leakage would be detected prior to gross failure of the component. This weld is also inspected during the integrated leak rate required by Technical Specifications 5.5.3, "Primary Coolant Sources Outside Containment", on a refueling frequency.

The component weld was examined by volumetric NDE methods during construction and verified to be free from unacceptable fabrication defects. Based on the coverage and results of the volumetric and the pressure testing VT-2 examinations performed, it is Duke's position that this combination of examinations provides a reasonable assurance of component integrity.

VIII. Precedents

This weld was last inspected 9/22/98 during 2EOC9 with only 62% coverage. Relief Request 99-01 was submitted to and accepted/granted by the NRC without an RAI recognizing that best effort was made to complete the examination with maximum coverage and that re-design and/or replacement of the component in order to fully comply with Code requirements would be a significant burden.

I. ASME Code Component Affected

Reactor Vessel Head
Reactor Coolant System
Carbon Steel Meridian Weld
Weld ID = 2RPV-101-104A
Item Number/Summary Number = C2.B1.22.0001

II. Applicable Code Edition and Addenda

ASME Boiler and Pressure Vessel Code, Section XI - 1998 Edition thru the 2000 Addenda

III. Applicable Code Requirement

IWB-2500, Table IWB-2500-1, Examination Category B-A, Item Number B1.22
Fig. IWB-2500-3, 100% Volume Coverage of Examination Volume A-B-C-D

IV. Impracticality of Compliance

The material is carbon steel. This weld has a wall thickness of 7.0 inches.

During the ultrasonic examination of this weld, coverage of the required examination volume was limited to 63.9% due to the proximity of a lifting lug. The ultrasonic examination was performed using an Appendix VIII qualified phased array procedure from the RPV head outside surface. Refracted longitudinal beam angles between 10 degrees and 55 degrees were used.

The percentage of coverage reported represents the aggregate coverage from all scans performed on the weld and adjacent base material. The coverage from each scan is shown on the following table.

Primary Angles	Beam Direction	Weld Length Scanned (inches)	Percent of Volume Covered	Percent of Coverage Claimed
10°-55°	Perpendicular from Surface 1	18.2	84.8	84.8
10°-55°	Perpendicular from Surface 2	18.2	15.4	15.4
10°-55°	Parallel from Top Surface	18.2	67.1	67.1
10°-55°	Parallel from Bottom	18.2	57.4	57.4

	Surface			
100% of the volume was covered for a length of 3.8" (17.7%)		**Aggregate = 63.9%**		

In order to scan all of the required volume for this weld, the lifting lug would have to be removed. This is impractical. There were no recordable indications found during the examination of this weld.

The Catawba Inservice Inspection Plan allows the use of Code Case N-460, which requires greater than 90% volumetric coverage of examination volume A-B-C-D-E-F-G-H-I. Therefore, the available coverage will not meet the criteria of this Code Case.

V. Proposed Alternative and Basis for Use

ASME Section XI Code IWB-2500-1, Examination Category B-A requires extent of examination to include 100% of the welds in the category. Therefore, this weld cannot be removed from the examination schedule.

Radiography as an alternative is not feasible because access is not available for film placement. No alternative examinations are planned for the weld during the current inspection interval.

VI. Duration of Proposed Alternative

This request is for the duration of the third inservice inspection interval, currently scheduled to end on August 19, 2016.

VII. Justification for Granting Relief

Ultrasonic examination of the weld for item number C2.B1.22.0001 was conducted using personnel qualified in accordance with ASME Section XI, Appendix VIII of the 1998 Edition with the 2000 Addenda. Ultrasonic procedures complied with the requirements of ASME Section V, Article 4 of the 1998 Edition with the 2000 Addenda as amended by Section XI, Appendix I.

IWB-2500, Table IWB-2500-1, Examination Category B-P System Leakage Tests and VT-2 visual examinations performed each refueling outage provide adequate assurance of pressure boundary integrity.

In addition to the above Code required examinations (volumetric and pressure test), there are other activities which provide confidence that, in the event that leakage did occur through this weld, it would be detected and proper action

taken. Specifically, system leak rate limitations imposed by Technical Specifications 3.4.13, "Reactor Coolant System Leakage," include performing an RCS water inventory balance at least once every 72 hours and administratively performed every 24 hours. Additional monitoring using leak detection methods required by Technical Specifications 3.4.15, "Reactor Coolant System Leak Detection Instrumentation", provides additional assurance that any leakage would be detected prior to gross failure of the component.

The component weld was examined by volumetric NDE methods during construction and verified to be free from unacceptable fabrication defects. Based on the coverage and results of the volumetric and the pressure testing VT-2 examinations performed, it is Duke's position that this combination of examinations provides a reasonable assurance of component integrity.

VIII. Precedents

This weld was last inspected (as Weld ID 2RPV-101-104G and Item/Summary Number B01.022.003 during 2EOC8 with only 30.23% coverage. Relief Request 97-03 was submitted to and accepted/granted by the NRC without an RAI recognizing that best effort was made to complete the examination with maximum coverage and that re-design and/or replacement of the component in order to fully comply with Code requirements would be a significant burden.

Phased array UT techniques increased the coverage for the RPV head welds. The volumetric coverage for this meridional weld increased from 30.23% to 63.9%.

I. ASME Code Component Affected

Pressurizer
Reactor Coolant System
Pressurizer Spray Nozzle to Upper Head Weld
Weld ID = 2PZR-W2
Item Number/Summary Number = C2.B3.110.0002

II. Applicable Code Edition and Addenda

ASME Boiler and Pressure Vessel Code, Section XI - 1998 Edition thru the 2000 Addenda

III. Applicable Code Requirement

IWB-2500, Table IWB-2500-1, Examination Category B-D, Item Number B3.110 Fig. IWB-2500-7 (a), 100% Volume Coverage of Examination Volume A-B-C-D-E-F-G-H-I

IV. Impracticality of Compliance

The material is carbon steel. This weld has a diameter of 12.750 inches and a wall thickness of 3.0 inches.

During the ultrasonic examination of this weld, 81.7% coverage of the required examination volume was obtained. This weld is limited to 81.7% of the required examination volume because of the proximity of the nozzle blend radius which prevents scanning the weld from the nozzle side. The ultrasonic examination was performed in accordance with the requirements of Section V, Article 4 and the additional requirements of Section XI, Appendix I, 1998 Edition through the 2000 Addenda. Refracted shear wave angles of 35°, 45° and 60° were used to scan the weld and base material covering the examination volume to the maximum extent practical. In addition, a straight beam examination was performed. The percentage of coverage reported represents the aggregate coverage from all scans performed on the weld and adjacent base material. The coverage from each scan is shown in the following tables.

Angle Beam Weld Metal Coverage

Primary Angles	Beam Direction	Weld Length Scanned (inches)	Percent of Volume Covered	Percent of Coverage Claimed
35° and 45° shear	Perpendicular from Surface 1	100	100	100

35° and 45° shear	Perpendicular from Surface 2	100	76.1 + 59.9/2 = 68	68
35° and 45° shear	Parallel to the weld clock wise	100	100	100
35° and 45° shear	Parallel to the weld counter clock wise	100	100	100
		Total Weld Metal Coverage = 91.9%		

Angle Beam Base Metal Coverage

Primary Angles	Beam Direction	Weld Length Scanned (inches)	Percent of Volume Covered	Percent of Coverage Claimed
35°, 45° and 60° shear	Perpendicular from Surface 1	100	90.5	90.5
No scan from nozzle side				
35° and 45° shear	Parallel to the weld clock wise	100	64.5	64.5
35° and 45° shear	Parallel to the weld counter clock wise	100	64.5	64.5
		Total Base Metal Coverage = 77.5%		

The straight beam examination covered 75.6% of the weld and base material. The aggregate coverage is the average of the weld metal angle beam scans, the base metal angle beam scans and the straight beam scan, $(91.9+77.5+75.6)\div 3=81.7\%$. To obtain more coverage the weld would need to be re-designed to allow scanning from the nozzle side which is impractical. There were no recordable indications on this weld.

The Catawba Inservice Inspection Plan allows the use of Code Case N-460, which requires greater than 90% volumetric coverage of examination volume A-B-C-D-E-F-G-H-I. Therefore, the available coverage will not meet the criteria of this Code Case.

V. Proposed Alternative and Basis for Use

Radiography as an alternative is not feasible because access is not available for film placement. No alternative examinations are planned for the weld during the current inspection interval.

VI. Duration of Proposed Alternative

This request is for the duration of the third inservice inspection interval, currently scheduled to end on August 19, 2016.

VII. Justification for Granting Relief

Ultrasonic examination of the weld for item number C2.B3.110.0002 was conducted using personnel qualified in accordance with ASME Section XI, Appendix VII of the 1998 Edition with the 2000 Addenda. Ultrasonic procedures complied with the requirements of ASME Section V, Article 4 of the 1998 Edition with the 2000 Addenda as amended by Section XI, Appendix I.

IWB-2500, Table IWB-2500-1, Examination Category B-P System Leakage Tests and VT-2 visual examinations performed each refueling outage provide adequate assurance of pressure boundary integrity.

In addition to the above Code required examinations (volumetric and pressure test), there are other activities which provide confidence that, in the event that leakage did occur through this weld, it would be detected and proper action taken. Specifically, system leak rate limitations imposed by Technical Specifications 3.4.13, "Reactor Coolant System Leakage", include performing an RCS water inventory balance at least once every 72 hours and administratively performed every 24 hours. Additional monitoring using leak detection methods required by Technical Specifications 3.4.15, "Reactor Coolant System Leak Detection Instrumentation", provides additional assurance that any leakage would be detected prior to gross failure of the component.

The component weld was examined by volumetric NDE methods during construction and verified to be free from unacceptable fabrication defects. Based on the coverage and results of the volumetric and the pressure testing VT-2 examinations performed, it is Duke's position that this combination of examinations provides a reasonable assurance of component integrity.

VIII. Precedents

None.

The limitations from EOC 15 were compared with the past examination data. This comparison shows the following:

1. Limitations increased for similar metal piping welds as expected due to the limitations imposed by 10CFR50.55a(b)(2)(xv)(A)(1) since the last 10 Year Interval.

2. Pre outage estimates of percentages were inaccurate because the precise search unit size and wedge configuration was not known at the time.

I. ASME Code Component Affected

Pressurizer
Reactor Coolant System
Pressurizer Safety/Relief Nozzle to Head Weld
Weld ID = 2PZR-W4C
Item Number/Summary Number = C2.B3.110.0006

II. Applicable Code Edition and Addenda

ASME Boiler and Pressure Vessel Code, Section XI - 1998 Edition thru the 2000 Addenda

III. Applicable Code Requirement

IWB-2500, Table IWB-2500-1, Examination Category B-D, Item Number B3.110 Fig. IWB-2500-7 (a), 100% Volume Coverage of Examination Volume A-B-C-D-E-F-G-H-I

IV. Impracticality of Compliance

The material is carbon steel. This weld has a diameter of 15.0 inches and a wall thickness of 3.0 inches.

This weld is limited to 81.2% of the required examination volume because of the proximity of the nozzle blend radius which prevents scanning the weld from the nozzle side. The ultrasonic examination was performed in accordance with the requirements of Section V, Article 4 and the additional requirements of Section XI, Appendix I, 1998 Edition through the 2000 Addenda. Refracted shear wave angles of 35°, 45° and 60° were used to scan the weld and base material covering the examination volume to the maximum extent practical. In addition, a straight beam examination was performed. The percentage of coverage reported represents the aggregate coverage from all scans performed on the weld and adjacent base material. The coverage from each angle beam scan is shown on the following tables.

Angle Beam Weld Metal Coverage

Primary Angles	Beam Direction	Weld Length Scanned (inches)	Percent of Volume Covered	Percent of Coverage Claimed
35° and 45° shear	Perpendicular from Surface 1	100	100	100

35° and 45° shear	Perpendicular from Surface 2	100	82.4 + 61.4/2 = 71.9	71.9
35° and 45° shear	Parallel to the weld clock wise	100	100	100
35° and 45° shear	Parallel to the weld counter clock wise	100	100	100
		Total Weld Metal Coverage = 93%		

Angle Beam Base Metal Coverge

Primary Angles	Beam Direction	Weld Length Scanned (inches)	Percent of Volume Covered	Percent of Coverage Claimed
35°, 45° and 60° shear	Perpendicular from Surface 1	100	89.3	89.3
No scan from nozzle side				
35° and 45° shear	Parallel to the weld clock wise	100	63.1	63.1
35° and 45° shear	Parallel to the weld counter clock wise	100	63.1	63.1
		Total Base Metal Coverage = 76.2%		

The straight beam examination covered 74.3% of the weld and base material. The aggregate coverage is the average of the weld metal angle beam scans, the base metal angle beam scans and the straight beam scan, $(93+76.2+74.3)\div 3=81.2\%$. To obtain more coverage the weld would need to be re-designed to allow scanning from the nozzle side which is impractical. There were no recordable indications found during the examination of this weld.

The Catawba Inservice Inspection Plan allows the use of Code Case N-460, which requires greater than 90% volumetric coverage of examination volume A-B-C-D-E-F-G-H-I. Therefore, the available coverage will not meet the criteria of this Code Case.

V. Proposed Alternative and Basis for Use

Radiography as an alternative is not feasible because access is not available for film placement. No alternative examinations are planned for the weld during the current inspection interval.

VI. Duration of Proposed Alternative

This request is for the duration of the third inservice inspection interval, currently scheduled to end on August 19, 2016.

VII. Justification for Granting Relief

Ultrasonic examination of the weld for item number O2.B3.110.008 was conducted using personnel qualified in accordance with ASME Section XI, Appendix VII of the 1998 Edition with the 2000 Addenda. Ultrasonic procedures complied with the requirements of ASME Section V, Article 4 of the 1998 Edition with the 2000 Addenda as amended by Section XI, Appendix I.

IWB-2500, Table IWB-2500-1, Examination Category B-P System Leakage Tests and VT-2 visual examinations performed each refueling outage provide adequate assurance of pressure boundary integrity.

In addition to the above Code required examinations (volumetric and pressure test), there are other activities which provide confidence that, in the event that leakage did occur through this weld, it would be detected and proper action taken. Specifically, system leak rate limitations imposed by Technical Specifications 3.4.13, "Reactor Coolant System Leakage", include performing an RCS water inventory balance at least once every 72 hours and administratively performed every 24 hours. Additional monitoring using leak detection methods required by Technical Specifications 3.4.15, "Reactor Coolant System Leak Detection Instrumentation" provides additional assurance that any leakage would be detected prior to gross failure of the component.

The component weld was examined by volumetric NDE methods during construction and verified to be free from unacceptable fabrication defects. Based on the coverage and results of the volumetric and the pressure testing VT-2 examinations performed, it is Duke's position that this combination of examinations provides a reasonable assurance of component integrity.

VIII. Precedents

None.

The limitations from EOC 15 were compared with the past examination data. This comparison shows the following:

1. Limitations increased for similar metal piping welds as expected due to the limitations imposed by 10CFR50.55a(b)(2)(xv)(A)(1) since the last 10 Year Interval.

2. Pre outage estimates of percentages were inaccurate because the precise search unit size and wedge configuration was not known at the time.

I. ASME Code Component Affected

Piping Weld
Reactor Coolant System
Elbow to Valve Weld
Weld ID = 2NC25-5
Item Number/Summary Number = C2.B9.11.0037

II. Applicable Code Edition and Addenda

ASME Boiler and Pressure Vessel Code, Section XI - 1998 Edition thru the 2000 Addenda

III. Applicable Code Requirement

IWB-2500, Table IWB-2500-1, Examination Category B-J, Item Number B9.11
Fig. IWB-2500-8 (c), 100% Volume Coverage of Examination Volume C-D-E-F

IV. Impracticality of Compliance

The material is stainless steel. This weld has a diameter of 6.0 inches and a wall thickness of 0.719 inches.

This weld is limited to 64.6% of the required examination volume because of the valve configuration. Tapers on the valve side of the weld prevent scanning in two axial and two circumferential directions as required by 10CFR50.55a (b)(2)(xv)(A)(1). Therefore no credit is taken for the examination volume past the centerline of the weld on the valve side. The ultrasonic examination was performed using Appendix VIII qualified personnel, procedures, and equipment. A 60° refracted longitudinal wave was used to examine the far side of the examination volume but is not included in the percent of coverage. The coverage from each angle beam scan is shown in the following table.

Primary Angles	Beam Direction	Weld Length Scanned (inches)	Percent of Volume Covered	Percent of Coverage Claimed
60° shear	Axial Pipe Side	20.8	50	50
60° shear	Axial Valve Side	20.8	8.5	8.5
45° shear	Clockwise both sides	20.8	100	100

45° shear	Counter clockwise both sides	20.8	100		100
			Aggregate = 64.6%		
Supplementary Angle	**Beam Direction**	**Weld Length Scanned (in.)**	**Percent of Volume Covered**	**Percent of Coverage Claimed**	**Percent Actual Coverage**
60°RL	Axial pipe Side	20.8	50	0	50

In order to obtain more coverage the weld would have to be re-designed to allow scanning from the valve side. This is impractical. There were no recordable indications found during the examination of this weld.

The Catawba Inservice Inspection Plan allows the use of Code Case N-460, which requires greater than 90% volumetric coverage of examination volume C-D-E-F. Therefore, the available coverage will not meet the criteria of this Code Case.

V. Proposed Alternative and Basis for Use

Radiography (RT) is not a desired option because RT is limited in the ability to detect expected degradation mechanisms such as thermal fatigue cracking and stress corrosion crack initiating at the pipe inside surface. Additionally, Radiography has not been qualified through performance demonstration.

VI. Duration of Proposed Alternative

This request is for the duration of the third inservice inspection interval, currently scheduled to end on August 19, 2016.

VII. Justification for Granting Relief

Ultrasonic examination of the weld for the item number C2.B9.11.0037 was conducted using personnel, equipment, and procedures qualified in accordance with ASME Section XI, Appendix VIII Supplement 2 of the 1998 Edition with the 2000 Addenda as administered by the Performance Demonstration Initiative (PDI). In the case of this piping weld NRC has imposed requirements for coverage of stainless steel piping welds in 10CFR50.55a (b) (2) (xvi) (A) (1). This requires scanning of the weld and adjacent base material from four orthogonal directions. If this requirement cannot be met then the NRC will not allow credit for coverage on the far side of the weld unless a demonstration test is passed with all flaws being on the far side of the weld. The demonstration

requires detection, length sizing and through wall sizing of flaws with the sound beam passing through the austenitic weld metal. Performance demonstration qualifications for cast stainless steel (Appendix VIII, Supplement 9) is in course of preparation and current qualifications for piping do not address cast stainless steel components such as the valve body. Therefore credit for ultrasonic coverage is not claimed. Use of radiography (RT) to achieve more coverage has been evaluated and discarded because RT is less sensitive to service induced cracking and has not been subjected to the performance demonstration requirements in a manner similar to the ultrasonic method. While RT could in most cases provide more coverage the loss of sensitivity and lack of performance demonstration militates against its use.

IWB-2500, Table IWB-2500-1, Examination Category B-P System Leakage Tests and VT-2 visual examinations performed each refueling outage provide adequate assurance of pressure boundary integrity.

This is a Safety Injection pressure isolation check valve to downstream piping weld. In addition to the above Code required examinations (volumetric, surface, and pressure test), there are other activities which provide confidence that, in the event that leakage did occur through this weld, it would be detected and proper action taken. Specifically, system leak rate limitations imposed by Technical Specifications 3.4.13, "Reactor Coolant System Leakage", include performing an RCS water inventory balance at least once every 72 hours and administratively performed every 24 hours. Additional monitoring using leak detection methods required by Technical Specifications 3.4.15, "Reactor Coolant System Leak Detection Instrumentation", which is also performed provides additional assurance that any leakage would be detected prior to gross failure of the component.

The component weld was examined by volumetric NDE methods during construction and verified to be free from unacceptable fabrication defects. Based on the coverage and results of the volumetric, surface, and the pressure testing VT-2 examinations performed, it is Duke's position that this combination of examinations provides a reasonable assurance of component integrity.

VIII. Precedents

None.

The limitations from EOC 15 were compared with the past examination data. This comparison shows the following:

1. Limitations increased for similar metal piping welds as expected due to the limitations imposed by 10CFR50.55a(b)(2)(xv)(A)(1) since the last 10 Year Interval.

2. Pre outage estimates of percentages were inaccurate because the precise search unit size and wedge configuration was not known at the time.

I. ASME Code Component Affected

Piping Weld
Reactor Coolant System
Pipe to Nozzle Weld
Weld ID = 2NC43-13
Item Number/Summary Number = C2.B9.11.0052

II. Applicable Code Edition and Addenda

ASME Boiler and Pressure Vessel Code, Section XI - 1998 Edition thru the 2000 Addenda

III. Applicable Code Requirement

IWB-2500, Table IWB-2500-1, Examination Category B-J, Item Number B9.11
Fig. IWB-2500-8 (c), 100% Volume Coverage of Examination Volume C-D-E-F

IV. Impracticality of Compliance

The material is stainless steel. This weld has a diameter of 12.0 inches and a wall thickness of 1.125 inches.

This weld is limited to 62.5% of the required examination volume because of the proximity of the nozzle blend radius. The blend radius prevents scanning in two axial and two circumferential directions as required by 10CFR50.55a (b)(2)(xv)(A)(1). Therefore no credit is taken for the examination volume past the centerline of the weld on the nozzle side. The ultrasonic examination was performed using Appendix VIII qualified personnel, procedures, and equipment. A 60° refracted longitudinal wave was used to examine the far side of the examination volume but is not included in the percent of coverage. The coverage from each angle beam scan is shown in the following table.

Primary Angles	Beam Direction	Weld Length Scanned (inches)	Percent of Volume Covered	Percent of Coverage Claimed
45° 60° shear	Axial Pipe Side	40	50	50
No scan nozzle side				
45° shear	Clockwise both sides	40	100	100

45° shear	Counter clockwise both sides	40	100		100
			Aggregate = 62.5%		
Supplementary Angle	**Beam Direction**	**Weld Length Scanned (in.)**	**Percent of Volume Covered**	**Percent of Coverage Claimed**	**Percent Actual Coverage**
60°RL	Axial pipe Side	40	50	0	50

In order to obtain more coverage the weld would have to be re-designed to allow scanning from the nozzle side. This is impractical. Geometric indications were found during the examination of this weld.

The Catawba Inservice Inspection Plan allows the use of Code Case N-460, which requires greater than 90% volumetric coverage of examination volume C-D-E-F. Therefore, the available coverage will not meet the criteria of this Code Case.

V. Proposed Alternative and Basis for Use

Radiography (RT) is not a desired option because RT is limited in the ability to detect expected degradation mechanisms such as thermal fatigue cracking and stress corrosion crack initiating at the pipe inside surface. Additionally, Radiography has not been qualified through performance demonstration.

VI. Duration of Proposed Alternative

This request is for the duration of the third inservice inspection interval, currently scheduled to end on August 19, 2016.

VII. Justification for Granting Relief

Ultrasonic examination of the weld for the item number C2.B9.11.0052 was conducted using personnel, equipment, and procedures qualified in accordance with ASME Section XI, Appendix VIII Supplement 2 of the 1998 Edition with the 2000 Addenda as administered by the Performance Demonstration Initiative (PDI). In the case of this piping weld NRC has imposed requirements for coverage of stainless steel piping welds in 10CFR50.55a (b) (2) (xvi) (A) (1). This requires scanning of the weld and adjacent base material from four orthogonal directions. If this requirement cannot be met then the NRC will not allow credit for coverage on the far side of the weld unless a demonstration test is passed with all flaws being on the far side of the weld. The demonstration

requires detection, length sizing and through wall sizing of flaws with the sound beam passing through the austenitic weld metal. Performance demonstration qualifications for cast stainless steel (Appendix VIII, Supplement 9) are in course of preparation and current qualifications for piping do not address cast stainless steel components such as the valve body. Therefore credit for ultrasonic coverage is not claimed. Use of radiography (RT) to achieve more coverage has been evaluated and discarded because RT is less sensitive to service induced cracking and has not been subjected to the performance demonstration requirements in a manner similar to the ultrasonic method. While RT could in most cases provide more coverage the loss of sensitivity and lack of performance demonstration militates against its use.

IWB-2500, Table IWB-2500-1, Examination Category B-P System Leakage Tests and VT-2 visual examinations performed each refueling outage provide adequate assurance of pressure boundary integrity.

This is located between an RCS Hot Leg and an RHR Suction isolation valve. In addition to the above Code required examinations (volumetric, surface, and pressure test), there are other activities which provide confidence that, in the event that leakage did occur through this weld, it would be detected and proper action taken. Specifically, system leak rate limitations imposed by Technical Specifications 3.4.13, "Reactor Coolant System Leakage" include performing an RCS water inventory balance at least once every 72 hours and administratively performed every 24 hours. Additional monitoring using leak detection methods required by Technical Specifications 3.4.15, "Reactor Coolant System Leak Detection Instrumentation", which is also performed provides additional assurance that any leakage would be detected prior to gross failure of the component.

The component weld was examined by volumetric NDE methods during construction and verified to be free from unacceptable fabrication defects. Based on the coverage and results of the volumetric, surface, and the pressure testing VT-2 examinations performed, it is Duke's position that this combination of examinations provides a reasonable assurance of component integrity.

VIII. Precedents

None.

The limitations from EOC 15 were compared with the past examination data. This comparison shows the following:

1. Limitations increased for similar metal piping welds as expected due to the limitations imposed by 10CFR50.55a(b)(2)(xv)(A)(1) since the last 10 Year Interval.

2. Pre outage estimates of percentages were inaccurate because the precise search unit size and wedge configuration was not known at the time.

I. ASME Code Component Affected

Piping Weld
Safety Injection System
Pipe to Valve Weld
Weld ID = 2NI59-1
Item Number/Summary Number = C2.B9.11.0099

II. Applicable Code Edition and Addenda

ASME Boiler and Pressure Vessel Code, Section XI - 1998 Edition thru the 2000 Addenda

III. Applicable Code Requirement

IWB-2500, Table IWB-2500-1, Examination Category B-J, Item Number B9.11
Fig. IWB-2500-8 (c), 100% Volume Coverage of Examination Volume C-D-E-F

IV. Impracticality of Compliance

The material is stainless steel. This weld has a diameter of 10.0 inches and a wall thickness of 1.0 inch.

This weld is limited to 42.6% of the required examination volume because of the valve configuration. The taper on the valve side of the weld prevents scanning in two axial and two circumferential directions as required by 10CFR50.55a (b)(2)(xv)(A)(1). Therefore no credit is taken for the examination volume past the centerline of the weld on the valve side. The ultrasonic examination was performed using Appendix VIII qualified personnel, procedures, and equipment. A 60° refracted longitudinal wave was used to examine the far side of the examination volume but is not included in the percent of coverage. The coverage from each angle beam scan is shown in the following table.

Primary Angles	Beam Direction	Weld Length Scanned (inches)	Percent of Volume Covered	Percent of Coverage Claimed
45° 60° shear	Axial Pipe Side	33.8	64.2	64.2
45° shear	Axial valve side	33.8	18.8	18.8
45° shear	Clockwise both sides	33.8	43.6	43.6

45° shear	Counter clockwise both sides	33.8	43.6		43.6
			Aggregate = 42.6%		
Supplementary Angle	**Beam Direction**	**Weld Length Scanned (in.)**	**Percent of Volume Covered**	**Percent of Coverage Claimed**	**Percent Actual Coverage**
60°RL	Axial pipe Side	33.8	21.0	0	21.0

In order to obtain more coverage the weld would have to be re-designed to allow more access from the valve side. This is impractical. Geometric indications were found during the examination of this weld.

The Catawba Inservice Inspection Plan allows the use of Code Case N-460, which requires greater than 90% volumetric coverage of examination volume C-D-E-F. Therefore, the available coverage will not meet the criteria of this Code Case.

V. Proposed Alternative and Basis for Use

Radiography (RT) is not a desired option because RT is limited in the ability to detect expected degradation mechanisms such as thermal fatigue cracking and stress corrosion crack initiating at the pipe inside surface. Additionally, Radiography has not been qualified through performance demonstration.

VI. Duration of Proposed Alternative

This request is for the duration of the third inservice inspection interval, currently scheduled to end on August 19, 2016.

VII. Justification for Granting Relief

Ultrasonic examination of the weld for the item number C2.B9.11.0099 was conducted using personnel, equipment, and procedures qualified in accordance with ASME Section XI, Appendix VIII Supplement 2 of the 1998 Edition with the 2000 Addenda as administered by the Performance Demonstration Initiative (PDI). In the case of this piping weld NRC has imposed requirements for coverage of stainless steel piping welds in 10CFR50.55a (b) (2) (xvi) (A) (1). This requires scanning of the weld and adjacent base material from four orthogonal directions. If this requirement cannot be met then the NRC will not allow credit for coverage on the far side of the weld unless a demonstration test is passed with all flaws being on the far side of the weld. The demonstration

requires detection, length sizing and through wall sizing of flaws with the sound beam passing through the austenitic weld metal. Performance demonstration qualifications for cast stainless steel (Appendix VIII, Supplement 9) is in course of preparation and current qualifications for piping do not address cast stainless steel components such as the valve body. Therefore credit for ultrasonic coverage is not claimed. Use of radiography (RT) to achieve more coverage has been evaluated and discarded because RT is less sensitive to service induced cracking and has not been subjected to the performance demonstration requirements in a manner similar to the ultrasonic method. While RT could in most cases provide more coverage the loss of sensitivity and lack of performance demonstration militates against its use.

IWB-2500, Table IWB-2500-1, Examination Category B-P System Leakage Tests and VT-2 visual examinations performed each refueling outage provide adequate assurance of pressure boundary integrity.

This weld is on the downstream side of a Cold Leg Accumulator isolation valve. In addition to the above Code required examinations (volumetric, surface, and pressure test), there are other activities which provide confidence that, in the event that leakage did occur through this weld, it would be detected and proper action taken. Specifically, monitoring using leak detection methods required by Technical Specifications 3.4.15, "Reactor Coolant System Leak Detection Instrumentation", provides assurance that any leakage would be detected prior to gross failure of the component.

The component weld was examined by volumetric NDE methods during construction and verified to be free from unacceptable fabrication defects. Based on the coverage and results of the volumetric, surface, and the pressure testing VT-2 examinations performed, it is Duke's position that this combination of examinations provides a reasonable assurance of component integrity.

VIII. Precedents

None.

The limitations from EOC 15 were compared with the past examination data. This comparison shows the following:

1. Limitations increased for similar metal piping welds as expected due to the limitations imposed by 10CFR50.55a(b)(2)(xv)(A)(1) since the last 10 Year Interval.

2. Pre outage estimates of percentages were inaccurate because the precise search unit size and wedge configuration was not known at the time.

I. ASME Code Component Affected

Excess Letdown Heat Exchanger
Chemical and Volume Control System
Head to Flange Weld
Weld ID = 2ELDHX-HD-FLG
Item Number/Summary Number = C2.C1.20.0002

II. Applicable Code Edition and Addenda

ASME Boiler and Pressure Vessel Code, Section XI - 1998 Edition thru the 2000 Addenda

III. Applicable Code Requirement

IWC-2500, Table IWC-2500-1, Examination Category C-A, Item Number C1.20
Fig. IWC-2500-1 (a), 100% Volume Coverage of Examination Volume A-B-C-D

IV. Impracticality of Compliance

The materials are carbon steel and stainless steel. This weld has a diameter of 9.5 inches and a wall thickness of .75 inches.

This weld is limited to 30.6% of the required examination volume because of the weld joint design, the proximity of a nozzle drain line and the flange configuration. These factors prevent scanning the weld from two axial and two circumferential beam path directions as required by ASME, Section XI, Appendix III, III-4420 and III-4430, 1998 Edition through the 2000 Addenda. The examination volume was scanned with 45° shear waves and 70° refracted longitudinal waves to achieve the maximum practical coverage. The coverage from each angle beam scan is shown in the following table.

Primary Angles	Beam Direction	Weld Length Scanned (inches)	Percent of Volume Covered	Percent of Coverage Claimed
45° shear & 70° RL	Axial Head Side	15.0	59.4	29.7
No axial scan from flange side				
45° shear	Clockwise and Counter Clockwise Head Side at Drain Nozzles	15.0	26.4	13.2

45° shear	Clockwise and Counter Clockwise Flange Side Balance of Weld Length	15.0	36.3	18.2
		Aggregate = 30.6%		

In order to obtain more coverage the weld would have to be re-designed to allow scanning from both sides of the weld and the drain line would have to be moved. This is impractical. There were no recordable indications found during the examination of this weld.

The Catawba Inservice Inspection Plan allows the use of Code Case N-460, which requires greater than 90% volumetric coverage of examination volume A-B-C-D. Therefore, the available coverage will not meet the criteria of this Code Case.

V. Proposed Alternative and Basis for Use

Radiography as an alternative is not feasible because access is not available for film placement. No alternative examinations are planned for the weld during the current inspection interval.

VI. Duration of Proposed Alternative

This request is for the duration of the third inservice inspection interval, currently scheduled to end on August 19, 2016.

VII. Justification for Granting Relief

Ultrasonic examination of the weld for the item number C2.C1.20.0002 was conducted using personnel qualified in accordance with ASME Section XI, Appendix VII of the 1998 Edition with the 2000 Addenda. The procedure complied with the requirements of ASME Section XI, Appendix III, 1998 Edition with the 2000 Addenda.

IWC-2500, Table IWC-2500-1, Examination Category C-H System Leakage Tests and VT-2 visual examinations performed once each period provide adequate assurance of pressure boundary integrity.

In addition to the above Code required examinations (volumetric and pressure test), there are other activities which provide confidence that, in the event that leakage did occur through this weld, it would be detected and proper action

taken. This heat exchanger system is not normally in service. It is valved out of the system. However, when placed in service, system leak rate limitations imposed by Technical Specifications 3.4.13, "Reactor Coolant System Leakage", coupled with the use of leakage detection methods required by Technical Specifications 3.4.15, "Reactor Coolant System Leakage Detection Instrumentation", provide additional assurance that any leakage would be detected prior to gross failure of the component.

The component weld was examined by volumetric NDE methods during construction and verified to be free from unacceptable fabrication defects. Based on the coverage and results of the volumetric and the pressure testing VT-2 examinations performed, it is Duke's position that this combination of examinations provides a reasonable assurance of component integrity.

VIII. Precedents

None.

The limitations from EOC 15 were compared with the past examination data. This comparison shows the following:

Pre outage estimates of percentages were inaccurate because the precise search unit size and wedge configuration was not known at the time.

I. ASME Code Component Affected

Volume Control Tank
Chemical and Volume Control System
Head to Shell Weld
Weld ID = 2VCT-LH-SH
Item Number/Summary Number = C2.C1.20.0019

II. Applicable Code Edition and Addenda

ASME Boiler and Pressure Vessel Code, Section XI - 1998 Edition thru the 2000 Addenda

III. Applicable Code Requirement

IWC-2500, Table IWC-2500-1, Examination Category C-A, Item Number C1.20
Fig. IWC-2500-1 (a), 100% Volume Coverage of Examination Volume A-B-C-D

IV. Impracticality of Compliance

The material is stainless steel. This weld has a diameter of 90.0 inches and a wall thickness of .25 inches.

This weld is limited to 89.4% of the required examination volume because of the proximity of four support legs. This factor prevent scanning the weld from two axial and two circumferential beam path directions as required by ASME, Section XI, Appendix III, III-4420 and III-4430, 1998 Edition through the 2000 Addenda. The examination volume was scanned with 45° shear waves to achieve the maximum practical coverage. The coverage from each angle beam scan is shown in the following table.

Primary Angles	Beam Direction	Weld Length Scanned (inches)	Percent of Volume Covered	Percent of Coverage Claimed
45° shear	Axial Head Side	301.6	89.4	89.4
45° shear	Axial Shell Side	301.6	89.4	89.4
45° shear	Clockwise and Counter Clockwise Head Side	301.6	89.4	89.4
45° shear	Clockwise and Counter Clockwise	301.6	89.4	89.4

	Shell Side			
		Aggregate = 89.4%		

In order to obtain more coverage the supports would have to be moved to allow scanning from both sides of the weld. This is impractical. There were no recordable indications found during the examination of this weld.

The Catawba Inservice Inspection Plan allows the use of Code Case N-460, which requires greater than 90% volumetric coverage of examination volume A-B-C-D. Therefore, the available coverage will not meet the criteria of this Code Case.

V. Proposed Alternative and Basis for Use

Radiography as an alternative is not feasible because access is not available for film placement. No alternative examinations are planned for the weld during the current inspection interval.

VI. Duration of Proposed Alternative

This request is for the duration of the third inservice inspection interval, currently scheduled to end on August 19, 2016.

VII. Justification for Granting Relief

Ultrasonic examination of the weld for the item number C2.C1.20.0019 was conducted using personnel qualified in accordance with ASME Section XI, Appendix VII of the 1998 Edition with the 2000 Addenda. The procedure complied with the requirements of ASME Section XI, Appendix III, 1998 Edition with the 2000 Addenda.

IWC-2500, Table IWC-2500-1, Examination Category C-H System Leakage Tests and VT-2 visual examinations performed once each period provide adequate assurance of pressure boundary integrity.

In addition to the above Code required examinations (volumetric and pressure test), there are other activities which provide confidence that, in the event that leakage did occur through this weld, it would be detected and proper action taken. Specifically, system leak rate limitations imposed by Technical Specifications 3.4.13, "Reactor Coolant System Leakage", coupled with performance of an RCS water inventory balance at least once every 72 hours and administratively performed every 24 hours provide additional assurance that any leakage would be detected prior to gross failure of the component.

The component weld was examined by volumetric NDE methods during construction and verified to be free from unacceptable fabrication defects. Based on the coverage and results of the volumetric and the pressure testing VT-2 examinations performed, it is Duke's position that this combination of examinations provides a reasonable assurance of component integrity.

VIII. Precedents

This weld was last inspected 3/22/00 during 2EOC10 with 88.34% coverage. Relief Request 00-01 was submitted to and accepted/granted by the NRC without an RAI recognizing that best effort was made to complete the examination with maximum coverage and that re-design and/or replacement of the component in order to fully comply with Code requirements would be a significant burden.

I. ASME Code Component Affected

Heat Exchanger
Containment Spray System
Tubesheet to Shell Weld
Weld ID = 2BNSHX-2B-51C
Item Number/Summary Number = C2.C1.30.0008

II. Applicable Code Edition and Addenda

ASME Boiler and Pressure Vessel Code, Section XI - 1998 Edition thru the 2000 Addenda

III. Applicable Code Requirement

IWC-2500, Table IWC-2500-1, Examination Category C-A, Item Number C1.30
Fig. IWC-2500-2, 100% Volume Coverage of Examination Volume E-F-G-H

IV. Impracticality of Compliance

The material is stainless steel. This weld has a diameter of 49.5 inches and a wall thickness of 0.5 inches.

This weld is limited to 58.4% of the required examination volume because of the tubesheet design. This factor prevents scanning the weld from two axial and two circumferential beam path directions as required by ASME, Section XI, Appendix III, III-4420 and III-4430, 1998 Edition through the 2000 Addenda. The examination volume was scanned with 45° shear waves and 70° refracted longitudinal waves to achieve the maximum practical coverage. The coverage from each angle beam scan is shown in the following table.

Primary Angles	Beam Direction	Weld Length Scanned (inches)	Percent of Volume Covered	Percent of Coverage Claimed
45° shear & 70° RL	Axial Shell Side	155.5	0.9 + 48.2 = 49.1	49.1
45° shear	Axial Tubesheet Side	155.5	0.9 + 48.2 = 49.1	49.1
45° shear	Clockwise and Counter Clockwise Shell Side	155.5	2.2 + 65.4 = 67.6	67.6
45° shear	Clockwise and Counter	155.5	2.2 + 65.4 = 67.6	67.6

	Clockwise Tubesheet Side			
		Aggregate = 58.4%		

In order to obtain more coverage the tubesheet would have to be re-designed to allow complete scanning from both sides of the weld. This is impractical. There were two geometric indications found during the examination of this weld.

The Catawba Inservice Inspection Plan allows the use of Code Case N-460, which requires greater than 90% volumetric coverage of examination volume E-F-G-H. Therefore, the available coverage will not meet the criteria of this Code Case.

V. Proposed Alternative and Basis for Use

No alternative examinations are planned for the weld during the current inspection interval. Radiography (RT) is not a desired option because RT is limited in the ability to detect expected degradation mechanisms such as thermal fatigue cracking and stress corrosion crack initiating at the pipe inside surface. Additionally, Radiography has not been qualified through performance demonstration.

VI. Duration of Proposed Alternative

This request is for the duration of the third inservice inspection interval, currently scheduled to end on August 19, 2016.

VII. Justification for Granting Relief

Ultrasonic examination of the weld for the item number C2.C1.30.0008 was conducted using personnel, equipment, and procedures qualified in accordance with ASME Section XI, Appendix VIII Supplement 2 of the 1998 Edition with the 2000 Addenda as administered by the Performance Demonstration Initiative (PDI). In the case of this piping weld NRC has imposed requirements for coverage of stainless steel piping welds in 10CFR50.55a (b) (2) (xvi) (A) (1). This requires scanning of the weld and adjacent base material from four orthogonal directions. If this requirement cannot be met then the NRC will not allow credit for coverage on the far side of the weld unless a demonstration test is passed with all flaws being on the far side of the weld. The demonstration requires detection, length sizing and through wall sizing of flaws with the sound beam passing through the austenitic weld metal. Performance demonstration qualifications for cast stainless steel (Appendix VIII, Supplement 9) are in course of preparation and current qualifications for piping do not address cast stainless steel components such as the valve body. Therefore credit for ultrasonic

coverage is not claimed. Use of radiography (RT) to achieve more coverage has been evaluated and discarded because RT is less sensitive to service induced cracking and has not been subjected to the performance demonstration requirements in a manner similar to the ultrasonic method. While RT could in most cases provide more coverage the loss of sensitivity and lack of performance demonstration militates against its use.

IWC-2500, Table IWC-2500-1, Examination Category C-H System Leakage Tests and VT-2 visual examinations performed once each period provide adequate assurance of pressure boundary integrity.

In addition to the above Code required examinations (volumetric surface, and pressure test), there are other activities which provide confidence that, in the event that leakage did occur through this weld, it would be detected and proper action taken. Specifically, visual observations performed during operator rounds provide additional assurance that any leakage would be detected prior to gross failure of the component. This weld is also inspected during the integrated leak rate test required by Technical Specification 5.5.3, "Primary Coolant Sources Outside Containment", on a refueling frequency.

The component weld was examined by volumetric NDE methods during construction and verified to be free from unacceptable fabrication defects. Based on the coverage and results of the volumetric, surface, and the pressure testing VT-2 examinations performed, it is Duke's position that this combination of examinations provides a reasonable assurance of component integrity.

VIII. Precedents

None.

I. ASME Code Component Affected

Heat Exchanger
Containment Spray System
Tubesheet to Shell Weld
Weld ID = 2BNSHX-2A-50
Item Number/Summary Number = C2.C1.30.0009

II. Applicable Code Edition and Addenda

ASME Boiler and Pressure Vessel Code, Section XI - 1998 Edition thru the 2000 Addenda

III. Applicable Code Requirement

IWC-2500, Table IWC-2500-1, Examination Category C-A, Item Number C1.30
Fig. IWC-2500-2, 100% Volume Coverage of Examination Volume E-F-G-H.

IV. Impracticality of Compliance

The material is stainless steel. This weld has a diameter of 49.675 inches and a wall thickness of 0.625 inches.

This weld is limited to 38.6% of the required examination volume because of the tubesheet design. This factor prevents scanning the weld from two axial and two circumferential beam path directions as required by ASME, Section XI, Appendix III, III-4420 and III-4430, 1998 Edition through the 2000 Addenda. The examination volume was scanned with 45° shear waves and 70° refracted longitudinal waves to achieve the maximum practical coverage. The coverage from each angle beam scan is shown in the following table.

Primary Angles	Beam Direction	Weld Length Scanned (inches)	Percent of Volume Covered	Percent of Coverage Claimed
45° shear & 70° RL	Axial Shell Side	156	20.6	20.6
45° shear	Axial Tubesheet Side	156	20.6	20.6
45° shear	Clockwise and Counter Clockwise Shell Side	156	22.9 + 1.7 + 32.0 = 56.6	56.6
45° shear	Clockwise and Counter	156	22.9 + 1.7 + 32.0 = 56.6	56.6

	Clockwise Tubesheet Side			
		Aggregate = 38.6%		

In order to obtain more coverage the tubesheet would have to be re-designed to allow scanning from both sides of the weld. This is impractical. There were four geometric indications found during the examination of this weld.

The Catawba Inservice Inspection Plan allows the use of Code Case N-460, which requires greater than 90% volumetric coverage of examination volume C-D-E-F. Therefore, the available coverage will not meet the criteria of this Code Case.

V. Proposed Alternative and Basis for Use

No alternative examinations are planned for the weld during the current inspection interval. Radiography (RT) is not a desired option because RT is limited in the ability to detect expected degradation mechanisms such as thermal fatigue cracking and stress corrosion crack initiating at the pipe inside surface. Additionally, Radiography has not been qualified through performance demonstration.

VI. Duration of Proposed Alternative

This request is for the duration of the third inservice inspection interval, currently scheduled to end on August 19, 2016.

VII. Justification for Granting Relief

Ultrasonic examination of the weld for the item number C2.C1.30.0009 was conducted using personnel, equipment, and procedures qualified in accordance with ASME Section XI, Appendix VIII Supplement 2 of the 1998 Edition with the 2000 Addenda as administered by the Performance Demonstration Initiative (PDI). In the case of this piping weld NRC has imposed requirements for coverage of stainless steel piping welds in 10CFR50.55a (b) (2) (xvi) (A) (1). This requires scanning of the weld and adjacent base material from four orthogonal directions. If this requirement cannot be met then the NRC will not allow credit for coverage on the far side of the weld unless a demonstration test is passed with all flaws being on the far side of the weld. The demonstration requires detection, length sizing and through wall sizing of flaws with the sound beam passing through the austenitic weld metal. Performance demonstration qualifications for cast stainless steel (Appendix VIII, Supplement 9) are in course of preparation and current qualifications for piping do not address cast stainless steel components such as the valve body. Therefore credit for ultrasonic

coverage is not claimed. Use of radiography (RT) to achieve more coverage has been evaluated and discarded because RT is less sensitive to service induced cracking and has not been subjected to the performance demonstration requirements in a manner similar to the ultrasonic method. While RT could in most cases provide more coverage the loss of sensitivity and lack of performance demonstration militates against its use.

IWC-2500, Table IWC-2500-1, Examination Category C-H System Leakage Tests and VT-2 visual examinations performed once each period provide adequate assurance of pressure boundary integrity.

In addition to the above Code required examinations (volumetric surface, and pressure test), there are other activities which provide confidence that, in the event that leakage did occur through this weld, it would be detected and proper action taken. Specifically, visual observations performed during operator rounds provide additional assurance that any leakage would be detected prior to gross failure of the component. This weld is also inspected during the integrated leak rate test required by Technical Specification 5.5.3, "Primary Coolant Sources Outside Containment", on a refueling frequency.

The component weld was examined by volumetric NDE methods during construction and verified to be free from unacceptable fabrication defects. Based on the coverage and results of the volumetric, surface, and the pressure testing VT-2 examinations performed, it is Duke's position that this combination of examinations provides a reasonable assurance of component integrity.

VIII. Precedents

None.

I. ASME Code Component Affected

Piping Weld
Residual Heat Removal System
Pipe to Flange Weld
Weld ID = 2ND5-5
Item Number/Summary Number = C2.C5.11.0071

II. Applicable Code Edition and Addenda

ASME Boiler and Pressure Vessel Code, Section XI - 1998 Edition thru the 2000 Addenda

III. Applicable Code Requirement

IWC-2500, Table IWC-2500-1, Examination Category C-F-1, Item Number C5.11
Fig. IWC-2500-7(a), 100% Volume Coverage of Examination Volume C-D-E-F

IV. Impracticality of Compliance

The material is stainless steel. This weld has a diameter of 14.0 inches and a wall thickness of 0.438 inches.

This weld is limited to 53.0% of the required examination volume. The taper on the flange side of the weld prevents scanning in two axial and two circumferential directions as required by 10CFR50.55a (b)(2)(xv)(A)(1). Therefore no credit is taken for the examination volume past the centerline of the weld on the flange side. The ultrasonic examination was performed using Appendix VIII qualified personnel, procedures, and equipment. A 60° refracted longitudinal wave was used to examine the far side of the examination volume but is not included in the percent of coverage. The coverage from each angle beam scan is shown in the following table.

Primary Angles	Beam Direction	Weld Length Scanned (inches)	Percent of Volume Covered	Percent of Coverage Claimed
60° shear	Axial Pipe Side	44.0	50	50
70° shear	Axial Valve Side	44.0	36.9	36.9
45° shear	Clockwise and Counter Clockwise Pipe Side and weld	44.0	53	62.5

45° shear	Clockwise and Clockwise Pipe Side and weld	44.0	53	62.5
No circumferential Scan from valve side				
			Aggregate = 53%	
Supplement Angle	**Beam Direction**	**Weld Length Scanned (in.)**	**Percent of Volume Covered**	**Percent of Coverage Claimed**
70°	Axial Pipe Side	44.0	13.1	0

In order to obtain more coverage the weld would have to be re-designed to allow scanning from the flange side. This is impractical. There were no recordable indications found during the examination of this weld.

The Catawba Inservice Inspection Plan allows the use of Code Case N-460, which requires greater than 90% volumetric coverage of examination volume C-D-E-F. Therefore, the available coverage will not meet the criteria of this Code Case.

V. Proposed Alternative and Basis for Use

No alternative examinations are planned for the weld during the current inspection interval. Radiography (RT) is not a desired option because RT is limited in the ability to detect expected degradation mechanisms such as thermal fatigue cracking and stress corrosion crack initiating at the pipe inside surface. Additionally, Radiography has not been qualified through performance demonstration.

VI. Duration of Proposed Alternative

This request is for the duration of the third inservice inspection interval, currently scheduled to end on August 19, 2016.

VII. Justification for Granting Relief

Ultrasonic examination of the weld for the item number C2.C5.11.0071 was conducted using personnel, equipment, and procedures qualified in accordance with ASME Section XI, Appendix VIII Supplement 2 of the 1998 Edition with the 2000 Addenda as administered by the Performance Demonstration Initiative (PDI). In the case of this piping weld NRC has imposed requirements for

coverage of stainless steel piping welds in 10CFR50.55a (b) (2) (xvi) (A) (1). This requires scanning of the weld and adjacent base material from four orthogonal directions. If this requirement cannot be met then the NRC will not allow credit for coverage on the far side of the weld unless a demonstration test is passed with all flaws being on the far side of the weld. The demonstration requires detection, length sizing and through wall sizing of flaws with the sound beam passing through the austenitic weld metal. Performance demonstration qualifications for cast stainless steel (Appendix VIII, Supplement 9) are in course of preparation and current qualifications for piping do not address cast stainless steel components such as the valve body. Therefore credit for ultrasonic coverage is not claimed. Use of radiography (RT) to achieve more coverage has been evaluated and discarded because RT is less sensitive to service induced cracking and has not been subjected to the performance demonstration requirements in a manner similar to the ultrasonic method. While RT could in most cases provide more coverage, the loss of sensitivity and lack of performance demonstration militates against its use.

IWC-2500, Table IWC-2500-1, Examination Category C-H System Leakage Tests and VT-2 visual examinations performed once each period provide adequate assurance of pressure boundary integrity.

This weld is located in the RHR Pump suction piping. In addition to the above Code required examinations (volumetric surface, and pressure test), there are other activities which provide confidence that, in the event that leakage did occur through this weld, it would be detected and proper action taken. Specifically, visual observations performed during operator rounds provide additional assurance that any leakage would be detected prior to gross failure of the component. This weld is also inspected during the integrated leak rate test required by Technical Specification 5.5.3, "Primary Coolant Sources Outside Containment", on a refueling frequency.

The component weld was examined by volumetric NDE methods during construction and verified to be free from unacceptable fabrication defects. Based on the coverage and results of the volumetric, surface, and the pressure testing VT-2 examinations performed, it is Duke's position that this combination of examinations provides a reasonable assurance of component integrity.

VIII. Precedents

None.

The limitations from EOC 15 were compared with the past examination data. This comparison shows the following:

1. Limitations increased for similar metal piping welds as expected due to the limitations imposed by 10CFR50.55a(b)(2)(xv)(A)(1) since the last 10 Year Interval.

2. Pre outage estimates of percentages were inaccurate because the precise search unit size and wedge configuration was not known at the time.

I. ASME Code Component Affected

Piping Weld
Residual Heat Removal System
Pipe to Flange Weld
Weld ID = 2ND5-8
Item Number/Summary Number = C2.C5.11.0074

II. Applicable Code Edition and Addenda

ASME Boiler and Pressure Vessel Code, Section XI - 1998 Edition thru the 2000 Addenda

III. Applicable Code Requirement

IWC-2500, Table IWC-2500-1, Examination Category C-F-1, Item Number C5.11
Fig. IWC-2500-7(a), 100% Volume Coverage of Examination Volume C-D-E-F

IV. Impracticality of Compliance

The material is stainless steel. This weld has a diameter of 14.0 inches and a wall thickness of 0.438 inches.

This weld is limited to 53.0% of the required examination volume. The taper on the flange side of the weld prevents scanning in two axial and two circumferential directions as required by 10CFR50.55a (b)(2)(xv)(A)(1). Therefore no credit is taken for the examination volume past the centerline of the weld on the flange side. The ultrasonic examination was performed using Appendix VIII qualified personnel, procedures, and equipment. A 60° refracted longitudinal wave was used to examine the far side of the examination volume but is not included in the percent of coverage. The coverage from each beam scan angle is shown in the following table.

Primary Angles	Beam Direction	Weld Length Scanned (inches)	Percent of Volume Covered	Percent of Coverage Claimed
60° shear	Axial Pipe Side	44.0	50	50
70° shear	Axial Flange Side	44.0	36.9	36.9
45° shear	Clockwise and Counter Clockwise Pipe Side and weld	44.0	53	62.5

45° shear	Clockwise and Clockwise Pipe Side and weld	44.0	53	62.5
No circumferential Scan from flange side				
		Aggregate = 53%		
Supplement Angle	**Beam Direction**	**Weld Length Scanned (in.)**	**Percent of Volume Covered**	**Percent of Coverage Claimed**
70°	Axial Pipe Side	44.0	13.1	0

In order to obtain more coverage the weld would have to be re-designed to allow scanning from the flange side. This is impractical. There were no recordable indications found during the examination of this weld.

The Catawba Inservice Inspection Plan allows the use of Code Case N-460, which requires greater than 90% volumetric coverage of examination volume C-D-E-F. Therefore, the available coverage will not meet the criteria of this Code Case.

V. Proposed Alternative and Basis for Use

No alternative examinations are planned for the weld during the current inspection interval. Radiography (RT) is not a desired option because RT is limited in the ability to detect expected degradation mechanisms such as thermal fatigue cracking and stress corrosion crack initiating at the pipe inside surface. Additionally, Radiography has not been qualified through performance demonstration.

VI. Duration of Proposed Alternative

This request is for the duration of the third inservice inspection interval, currently scheduled to end on August 19, 2016.

VII. Justification for Granting Relief

Ultrasonic examination of the weld for the item number C2.C5.11.0074 was conducted using personnel, equipment, and procedures qualified in accordance with ASME Section XI, Appendix VIII Supplement 2 of the 1998 Edition with the 2000 Addenda as administered by the Performance Demonstration Initiative (PDI). In the case of this piping weld NRC has imposed requirements for

coverage of stainless steel piping welds in 10CFR50.55a (b) (2) (xvi) (A) (1). This requires scanning of the weld and adjacent base material from four orthogonal directions. If this requirement cannot be met then the NRC will not allow credit for coverage on the far side of the weld unless a demonstration test is passed with all flaws being on the far side of the weld. The demonstration requires detection, length sizing and through wall sizing of flaws with the sound beam passing through the austenitic weld metal. Performance demonstration qualifications for cast stainless steel (Appendix VIII, Supplement 9) are in course of preparation and current qualifications for piping do not address cast stainless steel components such as the valve body. Therefore credit for ultrasonic coverage is not claimed. Use of radiography (RT) to achieve more coverage has been evaluated and discarded because RT is less sensitive to service induced cracking and has not been subjected to the performance demonstration requirements in a manner similar to the ultrasonic method. While RT could in most cases provide more coverage, the loss of sensitivity and lack of performance demonstration militates against its use.

IWC-2500, Table IWC-2500-1, Examination Category C-H System Leakage Tests and VT-2 visual examinations performed once each period provide adequate assurance of pressure boundary integrity.

This weld is located in the RHR Pump suction piping. In addition to the above Code required examinations (volumetric surface, and pressure test), there are other activities which provide confidence that, in the event that leakage did occur through this weld, it would be detected and proper action taken. Specifically, visual observations performed during operator rounds provide additional assurance that any leakage would be detected prior to gross failure of the component. This weld is also inspected during the integrated leak rate test required by Technical Specification 5.5.3, "Primary Coolant Sources Outside Containment", on a refueling frequency.

The component weld was examined by volumetric NDE methods during construction and verified to be free from unacceptable fabrication defects. Based on the coverage and results of the volumetric, surface, and the pressure testing VT-2 examinations performed, it is Duke's position that this combination of examinations provides a reasonable assurance of component integrity.

VIII. Precedents

None.

The limitations from EOC 15 were compared with the past examination data. This comparison shows the following:

1. Limitations increased for similar metal piping welds as expected due to the limitations imposed by 10CFR50.55a(b)(2)(xv)(A)(1) since the last 10 Year Interval.

2. Pre outage estimates of percentages were inaccurate because the precise search unit size and wedge configuration was not known at the time.

I. ASME Code Component Affected

Piping Weld
Containment Spray System
Pipe to Valve Weld
Weld ID = 2NS32-1
Item Number/Summary Number = C2.C5.11.0146

II. Applicable Code Edition and Addenda

ASME Boiler and Pressure Vessel Code, Section XI - 1998 Edition thru the 2000 Addenda

III. Applicable Code Requirement

IWC-2500, Table IWC-2500-1, Examination Category C-F-1, Item Number C5.11
Fig. IWC-2500-7(a), 100% Volume Coverage of Examination Volume C-D-E-F

IV. Impracticality of Compliance

The material is stainless steel. This weld has a diameter of 12.0 inches and a wall thickness of 0.375 inches.

This weld is limited to 41.1% of the required examination volume because of the valve configuration. The taper on the valve side of the weld prevents scanning in two axial and two circumferential directions as required by 10CFR50.55a (b)(2)(xv)(A)(1). Therefore no credit is taken for the examination volume past the centerline of the weld on the valve side. The ultrasonic examination was performed using Appendix VIII qualified personnel, procedures, and equipment. A 70° refracted shear wave was used to examine the far side of the examination volume but is not included in the percent of coverage. The coverage from each angle beam scan is shown in the following table.

Primary Angles	Beam Direction	Weld Length Scanned (inches)	Percent of Volume Covered	Percent of Coverage Claimed
45° and 70° shear	Axial Pipe Side	40.0	45.1	45.1
60° shear	Axial Valve Side	40.0	50.0	50.0
45° shear	Clockwise and Counter Clockwise Pipe Side and weld	40.0	34.6	34.6

45° shear	Clockwise and Clockwise Pipe Side and weld	40.0	34.6	34.6
No circumferential Scan from valve side				
		Aggregate = 41.1%		

In order to obtain more coverage the weld would have to be re-designed to allow scanning from the valve side. This is impractical. There were no recordable indications found during the examination of this weld.

The Catawba Inservice Inspection Plan allows the use of Code Case N-460, which requires greater than 90% volumetric coverage of examination volume C-D-E-F. Therefore, the available coverage will not meet the acceptance criteria of this Code Case.

V. Proposed Alternative and Basis for Use

No alternative examinations are planned for the weld during the current inspection interval. Radiography (RT) is not a desired option because RT is limited in the ability to detect expected degradation mechanisms such as thermal fatigue cracking and stress corrosion crack initiating at the pipe inside surface. Additionally, Radiography has not been qualified through performance demonstration.

VI. Duration of Proposed Alternative

This request is for the duration of the third inservice inspection interval, currently scheduled to end on August 19, 2016.

VII. Justification for Granting Relief

Ultrasonic examination of the weld for the item number C2.C5.11.0146 was conducted using personnel, equipment, and procedures qualified in accordance with ASME Section XI, Appendix VIII Supplement 2 of the 1998 Edition with the 2000 Addenda as administered by the Performance Demonstration Initiative (PDI). In the case of this piping weld NRC has imposed requirements for coverage of stainless steel piping welds in 10CFR50.55a (b) (2) (xvi) (A) (1). This requires scanning of the weld and adjacent base material from four orthogonal directions. If this requirement cannot be met then the NRC will not allow credit for coverage on the far side of the weld unless a demonstration test is passed with all flaws being on the far side of the weld. The demonstration requires detection, length sizing and through wall sizing of flaws with the sound

beam passing through the austenitic weld metal. Performance demonstration qualifications for cast stainless steel (Appendix VIII, Supplement 9) are in course of preparation and current qualifications for piping do not address cast stainless steel components such as the valve body. Therefore credit for ultrasonic coverage is not claimed. Use of radiography (RT) to achieve more coverage has been evaluated and discarded because RT is less sensitive to service induced cracking and has not been subjected to the performance demonstration requirements in a manner similar to the ultrasonic method. While RT could in most cases provide more coverage, the loss of sensitivity and lack of performance demonstration militates against its use.

IWC-2500, Table IWC-2500-1, Examination Category C-H System Leakage Tests and VT-2 visual examinations performed once each period provide adequate assurance of pressure boundary integrity.

This weld is at the Containment Recirculation Sump piping to Containment Spray Pump Suction isolation valve. In addition to the above Code required examinations (volumetric surface, and pressure test), there are other activities which provide confidence that, in the event that leakage did occur through this weld, it would be detected and proper action taken. Specifically, visual observations performed during operator rounds provide additional assurance that any leakage would be detected prior to gross failure of the component. This weld is also inspected during the integrated leak rate test required by Technical Specification 5.5.3, "Primary Coolant Sources Outside Containment", on a refueling frequency.

The component weld was examined by volumetric NDE methods during construction and verified to be free from unacceptable fabrication defects. Based on the coverage and results of the volumetric, surface, and the pressure testing VT-2 examinations performed, it is Duke's position that this combination of examinations provides a reasonable assurance of component integrity.

VIII. Precedents

None.

The limitations from EOC 15 were compared with the past examination data. This comparison shows the following:

1. Limitations increased for similar metal piping welds as expected due to the limitations imposed by 10CFR50.55a(b)(2)(xv)(A)(1) since the last 10 Year Interval.

2. Pre outage estimates of percentages were inaccurate because the precise search unit size and wedge configuration was not known at the time.

I. ASME Code Component Affected

Piping Weld
Chemical and Volume Control System
Pipe to Tee Weld
Weld ID = 2NV14-2
Item Number/Summary Number = C2.C5.21.0053

II. Applicable Code Edition and Addenda

ASME Boiler and Pressure Vessel Code, Section XI - 1998 Edition thru the 2000 Addenda

III. Applicable Code Requirement

IWC-2500, Table IWC-2500-1, Examination Category C-F-1, Item Number C5.21
Fig. IWC-2500-7(a), 100% Volume Coverage of Examination Volume C-D-E-F

IV. Impracticality of Compliance

The material is stainless steel. This weld has a diameter of 4.0 inches and a wall thickness of 0.531 inches.

This weld is limited to 86.9% of the required examination volume because of the proximity of the tee radius. The tee radius prevents scanning in two axial and two circumferential directions for the full length of the weld on the tee side as required by 10CFR50.55a (b)(2)(xv)(A)(1). Therefore no credit is taken for the examination volume past the centerline of the weld on the tee side where access is limited. The ultrasonic examination was performed using Appendix VIII qualified personnel, procedures, and equipment. A 60° refracted longitudinal wave was used to examine the tee side of the examination volume but is not included in the percent of coverage. The coverage from each angle beam scan is shown in the following table.

Primary Angles	Beam Direction	Weld Length Scanned (inches)	Percent of Volume Covered	Percent of Coverage Claimed
60° shear	Axial Tee Side	14.1	89.5	89.5
60° shear	Axial Pipe Side	14.1	78.9	78.9
45° shear	Clockwise Pipe Side and Tee Side	14.1	89.5	89.5

45° shear	Counter Clockwise Pipe Side and Tee Side	14.1	89.5	89.5
			Aggregate = 86.9%	
Supplemental Angle	**Beam Direction**	**Weld Length Scanned (in.)**	**Percent of Volume Covered**	**Percent of Coverage Claimed**
60°	Axial Pipe Side	6.0	50.0	0

In order to obtain more coverage the weld would have to be re-designed to allow scanning from the nozzle side. This is impractical. There were no recordable indications found during the examination of this weld.

The Catawba Inservice Inspection Plan allows the use of Code Case N-460, which requires greater than 90% volumetric coverage of examination volume C-D-E-F. Therefore, the available coverage will not meet the criteria of this Code Case.

V. Proposed Alternative and Basis for Use

No alternative examinations are planned for the weld during the current inspection interval. Radiography (RT) is not a desired option because RT is limited in the ability to detect expected degradation mechanisms such as thermal fatigue cracking and stress corrosion crack initiating at the pipe inside surface. Additionally, Radiography has not been qualified through performance demonstration.

VI. Duration of Proposed Alternative

This request is for the duration of the third inservice inspection interval, currently scheduled to end on August 19, 2016.

VII. Justification for Granting Relief

Ultrasonic examination of the weld for the item number C2.C5.21.0053 was conducted using personnel, equipment, and procedures qualified in accordance with ASME Section XI, Appendix VIII Supplement 2 of the 1998 Edition with the 2000 Addenda as administered by the Performance Demonstration Initiative (PDI). In the case of this piping weld NRC has imposed requirements for coverage of stainless steel piping welds in 10CFR50.55a (b) (2) (xvi) (A) (1). This requires scanning of the weld and adjacent base material from four orthogonal directions. If this requirement cannot be met then the NRC will not

allow credit for coverage on the far side of the weld unless a demonstration test is passed with all flaws being on the far side of the weld. The demonstration requires detection, length sizing and through wall sizing of flaws with the sound beam passing through the austenitic weld metal. Performance demonstration qualifications for cast stainless steel (Appendix VIII, Supplement 9) are in course of preparation and current qualifications for piping do not address cast stainless steel components such as the valve body. Therefore credit for ultrasonic coverage is not claimed. Use of radiography (RT) to achieve more coverage has been evaluated and discarded because RT is less sensitive to service induced cracking and has not been subjected to the performance demonstration requirements in a manner similar to the ultrasonic method. While RT could in most cases provide more coverage, the loss of sensitivity and lack of performance demonstration militates against its use.

IWC-2500, Table IWC-2500-1, Examination Category C-H System Leakage Tests and VT-2 visual examinations performed once each period provide adequate assurance of pressure boundary integrity.

This weld is in the Charging Pump discharge piping. In addition to the above Code required examinations (volumetric, surface, and pressure test), there are other activities which provide confidence that, in the event that leakage did occur through this weld, it would be detected and proper action taken. Specifically, visual observations performed during operator rounds provide additional assurance that any leakage would be detected prior to gross failure of the component. In addition, system leak rate limitations imposed by Technical Specifications 3.4.13, "Reactor Coolant System Leakage", including performing an RCS water inventory balance at least once every 72 hours and administratively performed every 24 hours provide additional assurance that any leakage would be detected prior to gross failure of the component.

The component weld was examined by volumetric NDE methods during construction and verified to be free from unacceptable fabrication defects. Based on the coverage and results of the volumetric, surface, and the pressure testing VT-2 examinations performed, it is Duke's position that this combination of examinations provides a reasonable assurance of component integrity.

VIII. Precedents

None.

The limitations from EOC 15 were compared with the past examination data. This comparison shows the following:

1. Limitations increased for similar metal piping welds as expected due to the limitations imposed by 10CFR50.55a(b)(2)(xv)(A)(1) since the last 10 Year Interval.

2. Pre outage estimates of percentages were inaccurate because the precise search unit size and wedge configuration was not known at the time.

I. ASME Code Component Affected

Piping Weld
Chemical and Volume Control System
Reducer to Tee Weld
Weld ID = 2NV14-3
Item Number/Summary Number = C2.C5.21.0054

II. Applicable Code Edition and Addenda

ASME Boiler and Pressure Vessel Code, Section XI - 1998 Edition thru the 2000 Addenda

III. Applicable Code Requirement

IWC-2500, Table IWC-2500-1, Examination Category C-F-1, Item Number C5.21
Fig. IWC-2500-7(a), 100% Volume Coverage of Examination Volume C-D-E-F

IV. Impracticality of Compliance

The material is stainless steel. This weld has a diameter of 4.0 inches and a wall thickness of 0.531 inches.

This weld is limited to 84.2% of the required examination volume because of the proximity of the tee radius. The tee radius prevents scanning in two axial and two circumferential directions for the full length of the weld on the tee side as required by 10CFR50.55a (b)(2)(xv)(A)(1). Therefore no credit is taken for the examination volume past the centerline of the weld on the tee side where access is limited. The ultrasonic examination was performed using Appendix VIII qualified personnel, procedures, and equipment. A 60° refracted longitudinal wave was used to examine the tee side of the examination volume but is not included in the percent of coverage. The coverage from each angle beam scan is shown in the following table.

Primary Angles	Beam Direction	Weld Length Scanned (inches)	Percent of Volume Covered	Percent of Coverage Claimed
60° shear	Axial Tee Side	14.1	57.5	57.7
60° shear	Axial Reducer Side	14.1	78.9	78.9
45° shear	Clockwise Reducer Side and Tee Side	14.1	100	100

45° shear	Counter Clockwise Reducer Side and Tee Side	14.1	100	100
			Aggregate = 84.2%	
Supplemental Angle	**Beam Direction**	**Weld Length Scanned (in.)**	**Percent of Volume Covered**	**Percent of Coverage Claimed**
60°	Axial Pipe Side	6.0	50.0	0

In order to obtain more coverage the weld would have to be re-designed to allow scanning from the nozzle side. This is impractical. There were no recordable indications found during the examination of this weld.

The Catawba Inservice Inspection Plan allows the use of Code Case N-460, which requires greater than 90% volumetric coverage of examination volume C-D-E-F. Therefore, the available coverage will not meet the acceptance criteria of this Code Case.

V. Proposed Alternative and Basis for Use

No alternative examinations are planned for the weld during the current inspection interval. Radiography (RT) is not a desired option because RT is limited in the ability to detect expected degradation mechanisms such as thermal fatigue cracking and stress corrosion crack initiating at the pipe inside surface. Additionally, Radiography has not been qualified through performance demonstration.

VI. Duration of Proposed Alternative

This request is for the duration of the third inservice inspection interval, currently scheduled to end on August 19, 2016.

VII. Justification for Granting Relief

Ultrasonic examination of the weld for the item number C2.C5.21.0054 was conducted using personnel, equipment, and procedures qualified in accordance with ASME Section XI, Appendix VIII Supplement 2 of the 1998 Edition with the 2000 Addenda as administered by the Performance Demonstration Initiative (PDI). In the case of this piping weld NRC has imposed requirements for coverage of stainless steel piping welds in 10CFR50.55a (b) (2) (xvi) (A) (1). This requires scanning of the weld and adjacent base material from four orthogonal directions. If this requirement cannot be met then the NRC will not

allow credit for coverage on the far side of the weld unless a demonstration test is passed with all flaws being on the far side of the weld. The demonstration requires detection, length sizing and through wall sizing of flaws with the sound beam passing through the austenitic weld metal. Performance demonstration qualifications for cast stainless steel (Appendix VIII, Supplement 9) are in course of preparation and current qualifications for piping do not address cast stainless steel components such as the valve body. Therefore credit for ultrasonic coverage is not claimed. Use of radiography (RT) to achieve more coverage has been evaluated and discarded because RT is less sensitive to service induced cracking and has not been subjected to the performance demonstration requirements in a manner similar to the ultrasonic method. While RT could in most cases provide more coverage, the loss of sensitivity and lack of performance demonstration militates against its use.

IWC-2500, Table IWC-2500-1, Examination Category C-H System Leakage Tests and VT-2 visual examinations performed once each period provide adequate assurance of pressure boundary integrity.

This weld is in the Charging Pump discharge piping. In addition to the above Code required examinations (volumetric, surface, and pressure test), there are other activities which provide confidence that, in the event that leakage did occur through this weld, it would be detected and proper action taken. Specifically, visual observations performed during operator rounds provide additional assurance that any leakage would be detected prior to gross failure of the component. In addition, system leak rate limitations imposed by Technical Specifications 3.4.13, "Reactor Coolant System Leakage", including performing an RCS water inventory balance at least once every 72 hours and administratively performed every 24 hours provide additional assurance that any leakage would be detected prior to gross failure of the component.

The component weld was examined by volumetric NDE methods during construction and verified to be free from unacceptable fabrication defects. Based on the coverage and results of the volumetric, surface, and the pressure testing VT-2 examinations performed, it is Duke's position that this combination of examinations provides a reasonable assurance of component integrity.

VIII. Precedents

None.

The limitations from EOC 15 were compared with the past examination data. This comparison shows the following:

1. Limitations increased for similar metal piping welds as expected due to the limitations imposed by 10CFR50.55a(b)(2)(xv)(A)(1) since the last 10 Year Interval.

2. Pre outage estimates of percentages were inaccurate because the precise search unit size and wedge configuration was not known at the time.

I. ASME Code Component Affected

Piping Weld
Chemical and Volume Control System
Pipe to Tee Weld
Weld ID = 2NV15-1
Item Number/Summary Number = C2.C5.21.0057

II. Applicable Code Edition and Addenda

ASME Boiler and Pressure Vessel Code, Section XI - 1998 Edition thru the 2000 Addenda

III. Applicable Code Requirement

IWC-2500, Table IWC-2500-1, Examination Category C-F-1, Item Number C5.21
Fig. IWC-2500-7(a), 100% Volume Coverage of Examination Volume C-D-E-F

IV. Impracticality of Compliance

The material is stainless steel. This weld has a diameter of 4.0 inches and a wall thickness of 0.531 inches.

This weld is limited to 86.9% of the required examination volume because of the proximity of the tee radius. The tee radius prevents scanning in two axial and two circumferential directions for the full length of the weld on the tee side as required by 10CFR50.55a (b)(2)(xv)(A)(1). Therefore no credit is taken for the examination volume past the centerline of the weld on the tee side where access is limited. The ultrasonic examination was performed using Appendix VIII qualified personnel, procedures, and equipment. A 60° refracted longitudinal wave was used to examine the tee side of the examination volume but is not included in the percent of coverage. The coverage from each angle beam scan is shown in the following table.

Primary Angles	Beam Direction	Weld Length Scanned (inches)	Percent of Volume Covered	Percent of Coverage Claimed
60° shear	Axial Tee Side	14.1	78.9	78.9
60° shear	Axial Pipe Side	14.1	89.5	89.5
45° shear	Clockwise Pipe Side and Tee Side	14.1	89.5	89.5

45° shear	Counter Clockwise Pipe Side and Tee Side	14.1	89.5	89.5
		Aggregate = 86.9%		
Supplemental Angle	**Beam Direction**	**Weld Length Scanned (in.)**	**Percent of Volume Covered**	**Percent of Coverage Claimed**
60°	Axial Pipe Side	6.0	50.0	0

In order to obtain more coverage the weld would have to be re-designed to allow scanning from the nozzle side. This is impractical. This is impractical. There were no recordable indications found during the examination of this weld.

The Catawba Inservice Inspection Plan allows the use of Code Case N-460, which requires greater than 90% volumetric coverage of examination volume C-D-E-F. Therefore, the available coverage will not meet the criteria of this Code Case.

V. Proposed Alternative and Basis for Use

No alternative examinations are planned for the weld during the current inspection interval. Radiography (RT) is not a desired option because RT is limited in the ability to detect expected degradation mechanisms such as thermal fatigue cracking and stress corrosion crack initiating at the pipe inside surface. Additionally, Radiography has not been qualified through performance demonstration.

VI. Duration of Proposed Alternative

This request is for the duration of the third inservice inspection interval, currently scheduled to end on August 19, 2016.

VII. Justification for Granting Relief

Ultrasonic examination of the weld for the item number C2.C5.21.0057 was conducted using personnel, equipment, and procedures qualified in accordance with ASME Section XI, Appendix VIII Supplement 2 of the 1998 Edition with the 2000 Addenda as administered by the Performance Demonstration Initiative (PDI). In the case of this piping weld NRC has imposed requirements for coverage of stainless steel piping welds in 10CFR50.55a (b) (2) (xvi) (A) (1). This requires scanning of the weld and adjacent base material from four orthogonal directions. If this requirement cannot be met then the NRC will not

allow credit for coverage on the far side of the weld unless a demonstration test is passed with all flaws being on the far side of the weld. The demonstration requires detection, length sizing and through wall sizing of flaws with the sound beam passing through the austenitic weld metal. Performance demonstration qualifications for cast stainless steel (Appendix VIII, Supplement 9) are in course of preparation and current qualifications for piping do not address cast stainless steel components such as the valve body. Therefore credit for ultrasonic coverage is not claimed. Use of radiography (RT) to achieve more coverage has been evaluated and discarded because RT is less sensitive to service induced cracking and has not been subjected to the performance demonstration requirements in a manner similar to the ultrasonic method. While RT could in most cases provide more coverage, the loss of sensitivity and lack of performance demonstration militates against its use.

IWC-2500, Table IWC-2500-1, Examination Category C-H System Leakage Tests and VT-2 visual examinations performed once each period provide adequate assurance of pressure boundary integrity.

This weld is in the Charging Pump discharge piping. In addition to the above Code required examinations (volumetric, surface, and pressure test), there are other activities which provide confidence that, in the event that leakage did occur through this weld, it would be detected and proper action taken. Specifically, visual observations performed during operator rounds provide additional assurance that any leakage would be detected prior to gross failure of the component. In addition, system leak rate limitations imposed by Technical Specifications 3.4.13, "Reactor Coolant System Leakage", including performing an RCS water inventory balance at least once every 72 hours and administratively performed every 24 hours provide additional assurance that any leakage would be detected prior to gross failure of the component.

The component weld was examined by volumetric NDE methods during construction and verified to be free from unacceptable fabrication defects. Based on the coverage and results of the volumetric, surface, and the pressure testing VT-2 examinations performed, it is Duke's position that this combination of examinations provides a reasonable assurance of component integrity.

VIII. Precedents

None.

The limitations from EOC 15 were compared with the past examination data. This comparison shows the following:

1. Limitations increased for similar metal piping welds as expected due to the limitations imposed by 10CFR50.55a(b)(2)(xv)(A)(1) since the last 10 Year Interval.

2. Pre outage estimates of percentages were inaccurate because the precise search unit size and wedge configuration was not known at the time.

FORM NDE-RT1 | REVISION 7

DUKE POWER COMPANY
RADIOGRAPHIC EXAMINATION REPORT / TECHNIQUE

Weld / Component ID: 2ARHRHX-5-9 Project: Catawba Unit 2
Procedure No./Rev: NDE 12 / 12 Acceptance/Reporting Standards: APP. C/IWC-3510
Radiographer: R.L. Gantt *Roger L. Gantt* Level: II Date: 09/29/07 Code Reference: ASME Section XI

Material: CS: ☐ SS: ☒ ☐ Diameter: 43.750" Thickness: .875"
Source: Ir-192 Size: .139 Curies: 66 Estimated Weld Build-Up: .0625" SFD: 22"
IQI: Film Side ☒ Source Side ☐ 20 Size(s) IQI Design: Standard Hole-Type
Film View: Single ☒ Composite ☒ Number of Film Per Cassette: 2 Film Stand Off NA
Film Brand/Type: Front Fuji 50 Center NA Back Fuji 50 Shim Size(s): NA
Screen Thickness: Front .010 Center NA Back .010 (Ug = Ft/D) Actual Ug: .006
Exposure Time: Hrs. NA Min. ** Sec. ** Thicker member used as shim: ☒
Exposure: ☒ Single Wall ☐ Double Wall Image View: ☒ Single Wall ☐ Double Wall

TECHNIQUE SET UP

☐ A

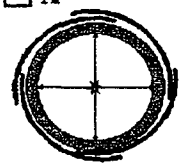

☐ B

☐ C

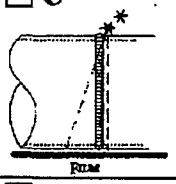

☐ D

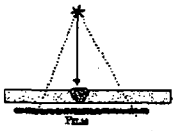

☐ E

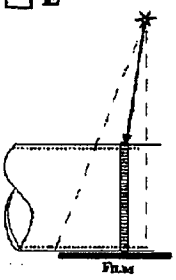

Offset Single Wall View

☐ F

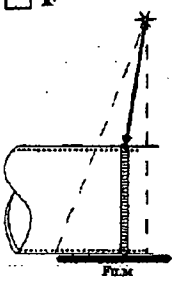

Offset Double Wall View

☐ G

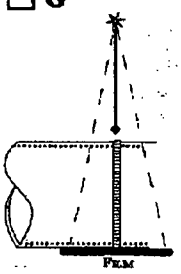

Superimposed Double Wall View

☐ H

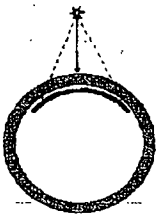

Single Wall Exposure, Film Inside Pipe

☒ I Other Draw Sketch

☒ Sketch Attached

FILM REVIEW

Interval	Date	Indication	Length/Size/Comment	Reviewer	Level	Date	Accept	Record	Reshoot	Reject
0-1	09/29/07	16		JKT	III	09/29/07	☒	☐	☐	☐
1-2	09/29/07	8		JKT	III	09/29/07	☒	☐	☐	☐
2-3	09/29/07	16		JKT	III	09/29/07	☒	☐	☐	☐
3-4	09/29/07	8		JKT	III	09/29/07	☒	☐	☐	☐
4-5	09/29/07	8		JKT	III	09/29/07	☒	☐	☐	☐
5-6	09/29/07			JKT	III	09/29/07	☒	☐	☐	☐
6-7	09/29/07			JKT	III	09/29/07	☒	☐	☐	☐
7-8	09/29/07	8		JKT	III	09/29/07	☒	☐	☐	☐
*8-9	09/29/07	8,16		JKT	III	09/29/07	☒	☐	☐	☐
9-10	09/29/07			JKT	III	09/29/07	☒	☐	☐	☐
10-11	09/29/07	8		JKT	III	09/29/07	☒	☐	☐	☐
11-12	09/29/07	8		JKT	III	09/29/07	☒	☐	☐	☐

Indication and *Flaw* types:					
		5. Crack	8. Porosity	11. Concavity	14. Rounded
1. Incomp. Fusion	*3. Excessive Pen.*	6. Slag	9. Tungsten	12. Inclusion	15. Surface
2. Incomp. Pen.	*4. Unconsumed Insert*	7. Undercut	10. Convexity	13. Elongated	16. Film Artifact

Exam Limitations: ☒ Yes: ____ % Examined ☐ No: (100% Examined) 17.

Comments: * Slag in adjacent non-pressure boundary fillet weld, no change from 9-22-98 exam, see PIP 2-C98-3659. **See attached Technique sheet for exposure times. Exam limited due to the OD configuration and internal T-shaped divider plates. Area of coverage obtained was calculated from measurements taken from each radiograph.

Second Review: *R Tucker* Level: III Date: 09/29/07
ANI/ANII Review: *[illegible]* Date: 10-12-07
ISI Item: C2.C1.10.0007

Relief Request # 08-CN-001 Attachment A Page 1 of 5

FORM NDE-RT1	REVISION 7

DUKE POWER COMPANY
RADIOGRAPHIC EXAMINATION REPORT / TECHNIQUE

Weld / Component ID: 2ARHRHX-5-9 Project: Catawba Unit 2
Procedure No./Rev: NDE 12 / 12 Acceptance/Reporting Standards: APP. C/IWC-3510
Radiographer: R.L. Gantt *Roger L. Gantt* Level: II Date: 09/29/07 Code Reference: ASME Section XI

Material: CS: ☐ SS: ☒ ☐ Diameter: 43.750" Thickness: .875"
Source: Ir-192 Size: .139 Curies: 66 Estimated Weld Build-Up: .0625" SFD: 22"
IQI: Film Side ☒ Source Side ☐ 20 Size(s) IQI Design: Standard Hole-Type
Film View: Single ☒ Composite ☒ Number of Film Per Cassette: 2 Film Stand Off NA
Film Brand/Type: Front Fuji 50 Center NA Back Fuji 50 Shim Size(s): NA
Screen Thickness: Front .010 Center NA Back .010 (Ug = Ft/D) Actual Ug: .006
Exposure Time: Hrs. NA Min. ** Sec. ** Thicker member used as shim: ☒
Exposure: ☒ Single Wall ☐ Double Wall Image View: ☒ Single Wall ☐ Double Wall

TECHNIQUE SET UP

☐ A

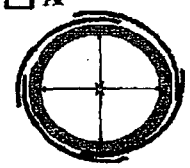

☐ B

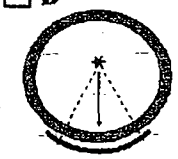

☐ C

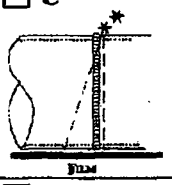

☐ D

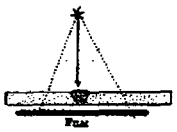

☐ E

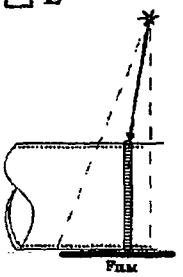

Offset Single Wall View

☐ F

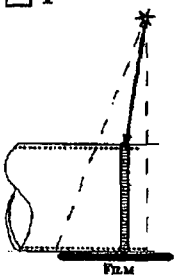

Offset Double Wall View

☐ G

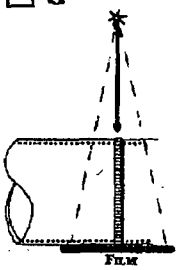

Superimposed Double Wall View

☐ H

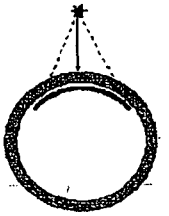

Single Wall Exposure, Film Inside Pipe

☒ I Other
Draw Sketch

☒ Sketch Attached

FILM REVIEW

Interval	Date	Indication	Length/Size/Comment	Reviewer	Level	Date	Accept	Record	Reshoot	Reject
12-13	09/29/07			JKT	III	09/29/07	✓	☐	☐	☐
13-0	09/29/07			JKT	III	09/29/07	✓	☐	☐	☐
							☐	☐	☐	☐
							☐	☐	☐	☐
							☐	☐	☐	☐
							☐	☐	☐	☐
							☐	☐	☐	☐
							☐	☐	☐	☐
							☐	☐	☐	☐
							☐	☐	☐	☐
							☐	☐	☐	☐
							☐	☐	☐	☐
							☐	☐	☐	☐

Indication and *Flaw* types:		5. *Crack*	8. Porosity	11. Concavity	14. Rounded
1. *Incomp. Fusion*	3. *Excessive Pen.*	6. Slag	9. Tungsten	12. Inclusion	15. Surface
2. *Incomp. Pen.*	4. *Unconsumed Insert*	7. Undercut	10. Convexity	13. Elongated	16. Film Artifact
Exam Limitations:	☒ Yes: ____	% Examined	☐ No: (100% Examined)		17.

Comments: **See attached Technique sheet for exposure times. Exam limited due to the OD configuration and internal T-shaped divider plates. Area of coverage obtained was calculated from measurements taken from each radiograph.

Second Review: *R Tyndall* Level: III Date: 09/29/07
ANI/ANII Review: *K Matus* Date: 10-12-07
ISI Item: C2.C1.10.0007

Radiographic Technique I

ISI Summary Number	C2.C1.10.0007	Identification Number	2ARHRHX-5-9

Date: 09/29/07

Level III Approval: T. L. Tucker TL Tucker

Exposure Arrangement 1	Exposure Arrangement 2	Exposure Arrangement 3
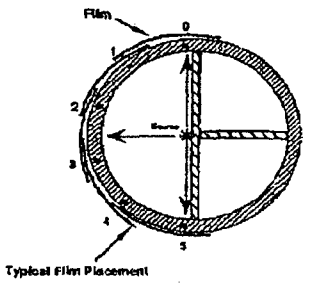	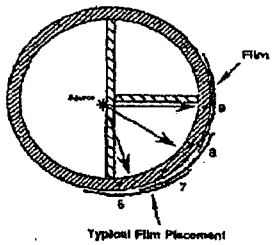	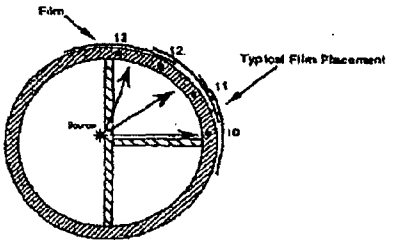

Exposure Times		Exposure Times	
0-1	7 min. 15 sec.	7-8	21 min.
1-2	7 min. 15 sec.	8-9	21 min.
2-3	7 min. 15 sec.	9-10	13 min. 15 sec.
3-4	7 min. 15 sec.	10-11	17 min.
4-5	7 min. 15 sec.	11-12	17 min.
5-6	7 min. 15 sec./33 min.	12-13	33 min./ 66 min.
6-7	33 min.	13-0	7 min. 15 sec./66 min.

Comments: J-Tube source positioner SN MNS-7 was used for this exam. The visible weld metal and base material is acceptable to the evaluation standards of ASME Sect XI IWC-3510 and RT procedure NDE-12 Appendix C. The overall acceptance status for this exam is considered "Reject" in accordance with procedure NDE-91 Rev.5 due to the limitations. The exam limitation is documented in PIP C-07-5544.

Duke Energy

Limitation Record

Site/Unit:	CNS / 2	Procedure:	NDE-12	Outage No.:	C2-15
Summary No.:	C2.C1.10.007	Procedure Rev.:	12	Report No.:	
Workscope:		Work Order No.:	01744131	Page:	4 of 5

Description of Limitation:

Exam limited due to the outside geometry of the Shell-to-Flange weld and the interior vessel T-divider plate configuration in conjunction with the inlet and outlet nozzle stiffener plates. The exam does not include the base material on the flange side of the weld, a portion of the weld on the flange side and three locations where the internal divider plates comes in contact with the exam area. The percentage of exam coverage was determined from measurements taken from the radiographic film. The following information was used in calculating the percent of examination coverage.

Sketch of Limitation:

See RT Film

Weld Length =141.96"
Weld Width = 0.750"
Base Metal = 1.00" (0.500" on each side of weld)

141.96" x 1.750" = 248.43 sq. in. Required examination area

Amount of coverage determined from the RT film = 151.388 sq.in.

Percent of coverage calculation:

151.388 / 248.43 = .6093 x 100 = 60.93%

Procedure NDE-91 Rev 5 requires the limitation percent to be rounded to the nearest 0.1 %.

The reported percent of coverage = 60.9 %

Limitations removal requirements: N/A

Radiation field: N/A

Examiner	Level	Signature	Date	Reviewer	Signature	Date
J.K. Todd	Level III	Janice K. Todd	9-29-07			
Examiner	Level	Signature	Date	Site Review	Signature	Date
T.L. Tucker	Level III	TL Tucker	9-29-07			
Other	Level	Signature	Date	ANII Review	Signature	Date
						10-12-07

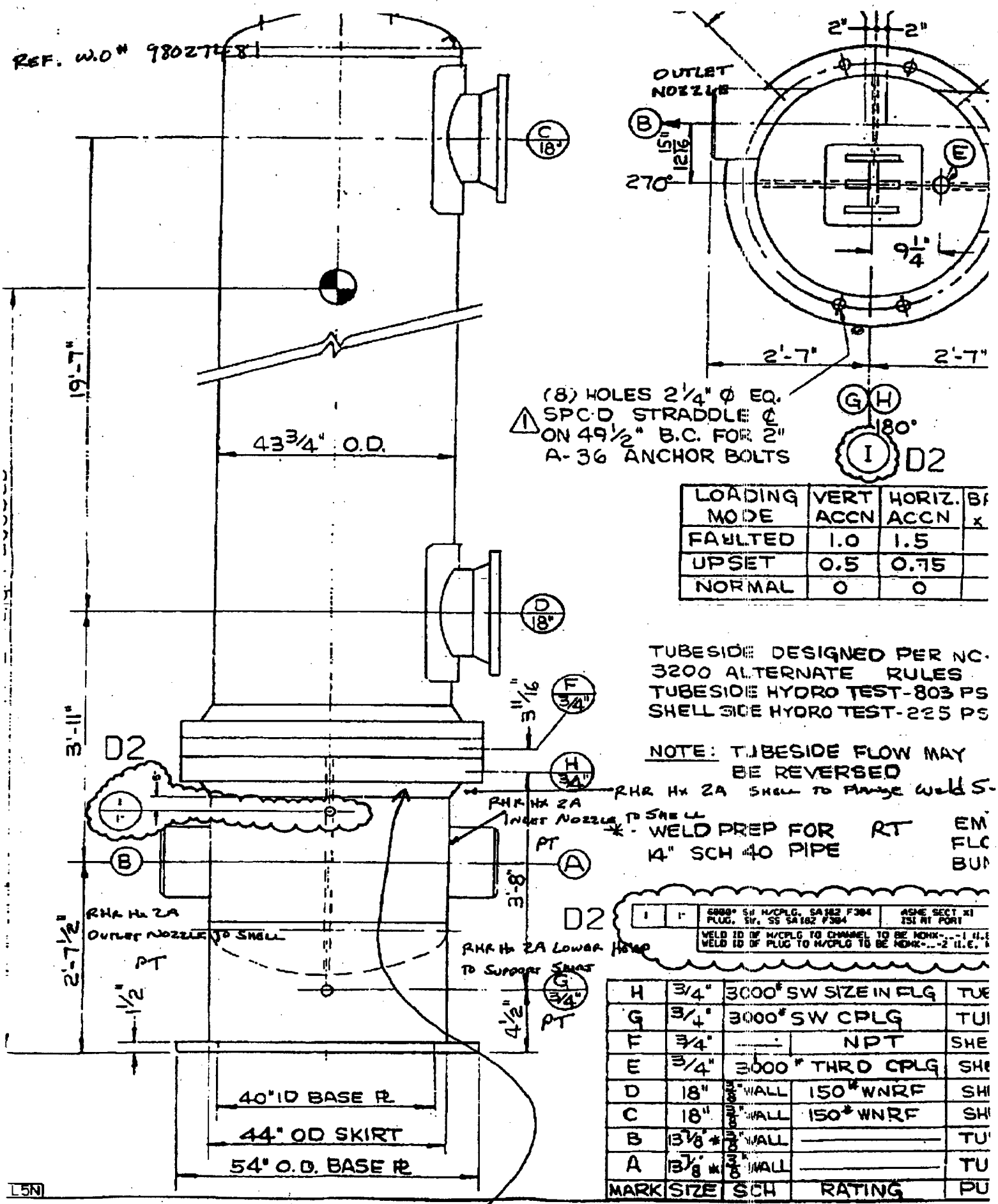

LOADING MODE	VERT ACCN	HORIZ. ACCN	BF x
FAULTED	1.0	1.5	
UPSET	0.5	0.75	
NORMAL	0	0	

TUBESIDE DESIGNED PER NC-3200 ALTERNATE RULES
TUBESIDE HYDRO TEST-803 PS
SHELL SIDE HYDRO TEST-225 PS

NOTE: TUBESIDE FLOW MAY BE REVERSED

1	1	6000# S/W H/CPLG, SA182 F304 PLUG, Sir, SS SA182 F304	ASME SECT XI ISI NT PORT
		WELD ID OF H/CPLG TO CHANNEL TO BE NONX-...-1 U.E.	
		WELD ID OF PLUG TO H/CPLG TO BE NONX-...-2 U.E.	

MARK	SIZE	SCH	RATING	PU
H	3/4"	3000# SW SIZE IN FLG		TUE
G	3/4"	3000# SW CPLG		TUI
F	3/4"	—	NPT	SHE
E	3/4"	3000# THRD CPLG		SHE
D	18"	3/8" WALL	150# WNRF	SHI
C	18"	3/8" WALL	150# WNRF	SHI
B	13 7/8" *	3/8" WALL	—	TU
A	13 7/8" *	3/8" WALL	—	TU

2ARHRHX-5-9 / C2.C1.10.0007

DWG # CNM 12.01.06 - 0038

UT Vessel Examination

Duke Energy

Site/Unit:	Catawba / 2	Procedure:	EPRI-RPV-PA-1	Outage No.:	C2-15
Summary No.:	C2.B1.22.0001	Procedure Rev.:	1	Report No.:	UT-07-870
Workscope:	ISI	Work Order No.:		Page:	1 of 6

Code: 1998/2000A Cat./Item: B-A/B1.22 Location:

Drawing No.: E 8871-104-001 Description: Head to Head

System ID: NC

Component ID: 2RPV-101-104A Size/Length: N/A Thickness/Diameter: 7.000 / 0.000

Limitations: Yes - See Attached Report Start Time: 0922 Finish Time: 0942

Examination Surface: Inside ☐ Outside ☑ Surface Condition: As Machined

Lo Location: 0° of Vessel Wo Location: Weld Centerline Couplant: ULTRAGEL II Batch No.: 06125

Temp. Tool Mfg.: D.A.S Serial No.: MCNDE32800 Surface Temp.: 68 °F

Cal. Report No.: CAL-07-810, CAL-07-814, CAL-07-815

Angle Used	0	45	45T	60	60T	*
Scanning dB						*

Indication(s): Yes ☐ No ☑ Scan Coverage: Upstream ☑ Downstream ☑ CW ☑ CCW ☑

Comments:

***Scan S1 Angles 10-75° scanned @ 34.5 dB**
Scan S2 Angles 10-55° degrees scanned @ 38.5dB
Scan L3 Angle 65° scanned @ 26.5dB

Results: Accept ☐ Reject ☑ Info ☐

Percent Of Coverage Obtained > 90%: No / 63.9% Reviewed Previous Data: Yes

Examiner Level III-N Cochran, Lonnie D.	Signature	Date 10/3/2007	Reviewer	Signature III	Date 10/19/07
Examiner Level III-N Jones, Russel E.	Signature	Date 10/3/2007	Site Review	Signature	Date
Other Level	Signature	Date	ANII Review	Signature	Date 10-23-07

Relief Request # 08-2N-001 Attachment B AJH 1/14/08

% Coverage Calculations

Item No. : C2. B1.22.0001 **Weld No. : 2RPV-101-104A**

Weld Length = 21.5"

Area not limited 6.0" - 2.2" (wedge) = 3.8"

% of Length Limited = (21.5" - 3.8") / 21.5 X 100%= 82.3%

% of Length Examined = 100% = 17.7%

% Coverage for 82.3% of length

S1 = 84.8
S2 = 15.4
S3 = 67.1
S4 = 57.4
224.7 / 4 = 56.2%

Aggregate Coverage

82.3% of the length X 56.2% of volume = 46.2%

17.7% of the length X 100% of volume = 17.7%

Aggregate % = 63.9%

Inspector / Date: III 10/3/07 Page 2 of 6

Reactor Vessel H d Meridonal Weld

Scale : 1" = 5"

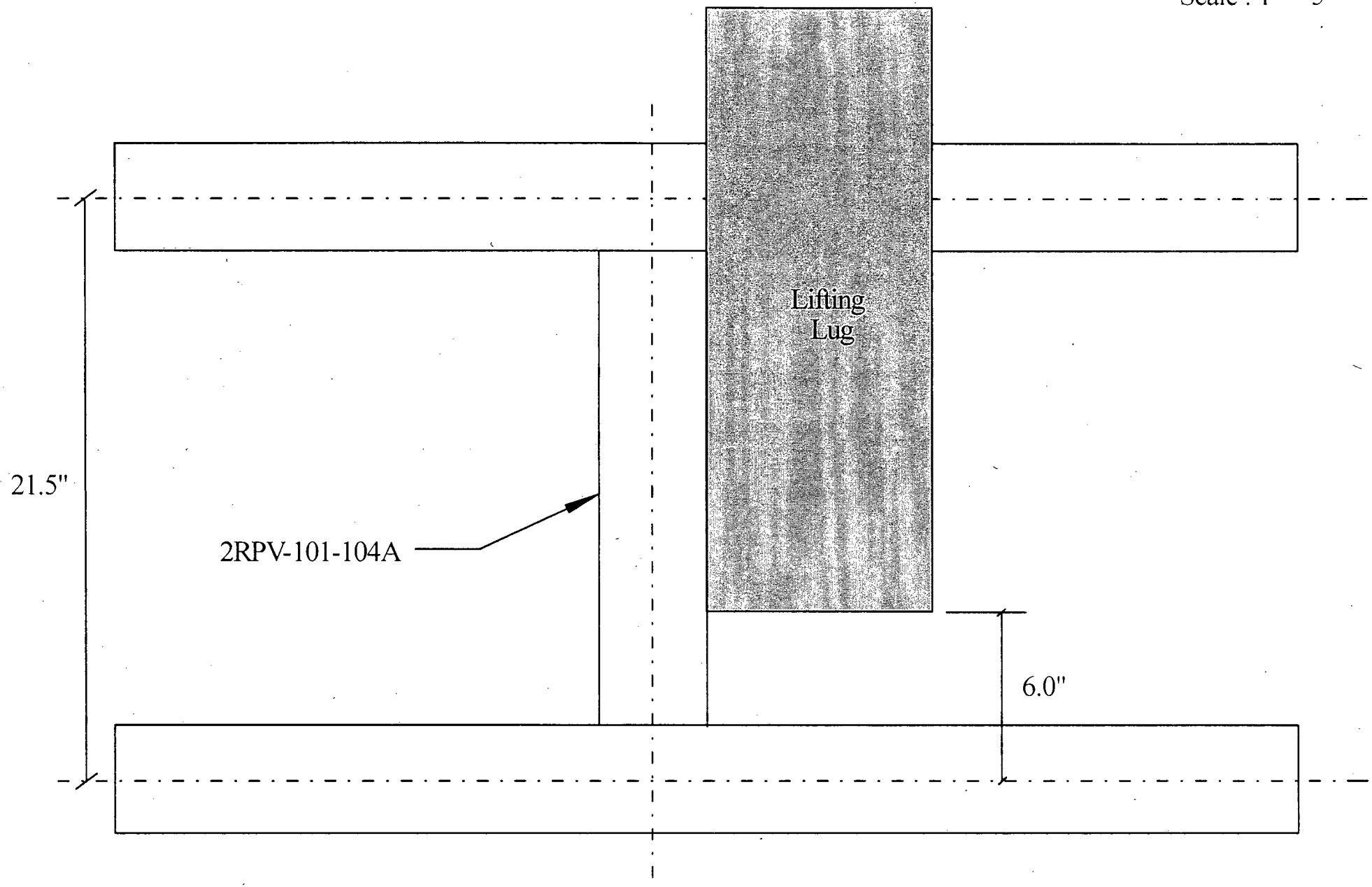

III 10/3/07

Item No. : C2.B1.22.0001
Weld No. : 2RPV-101-104A

Reactor Vessel Head Meridonal Weld - Side View

Scale : 1" = 5"

Total Exam Area = 77.18 sq. in.

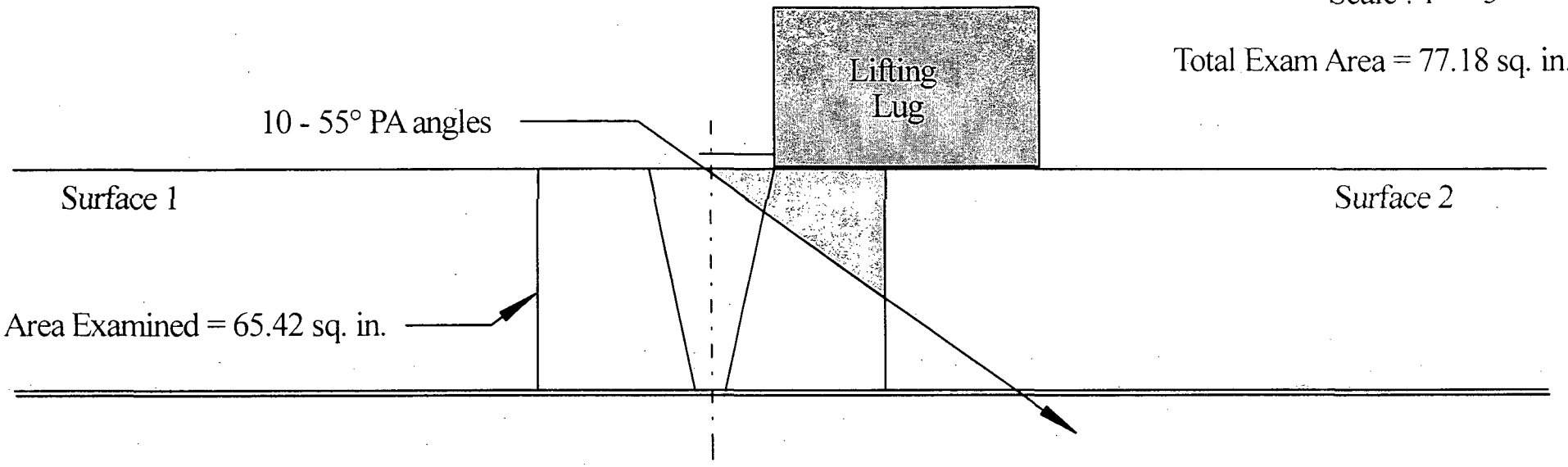

% Coverage from S1 = 65.42 / 77.18 x 100 = 84.8%

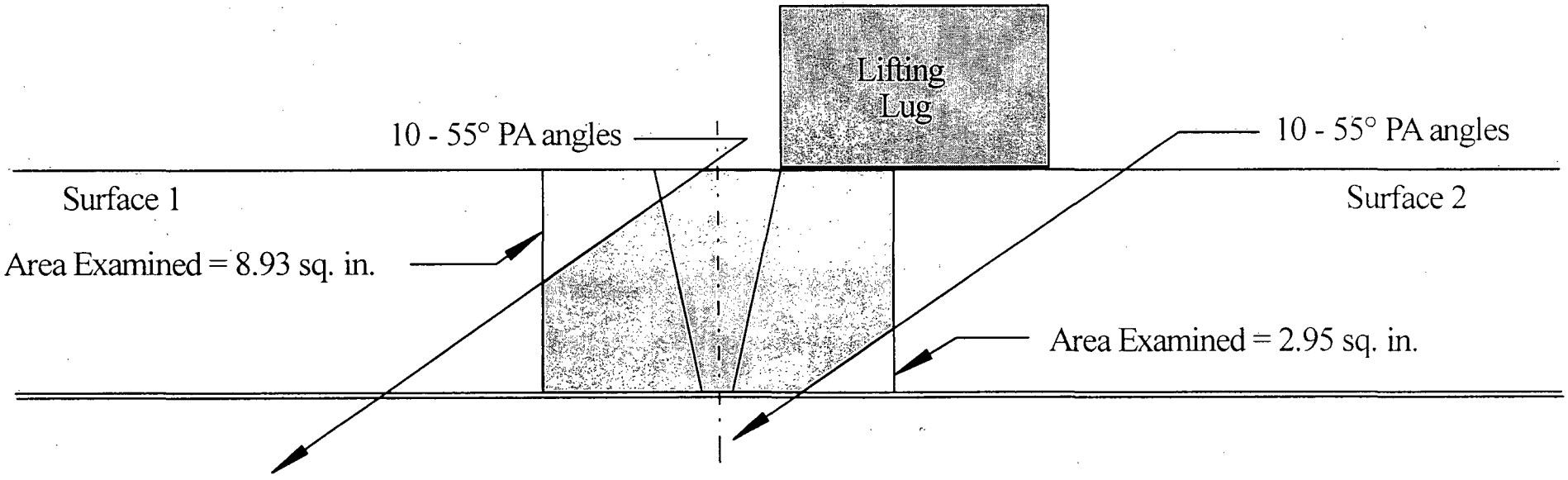

% Coverage from S2 = (8.93 + 2.95) / 77.18 x 100 =15.4%

III 10/3/07

Item No. : C2.B1.22.0001

Weld No. : 2RPV-101-104A

Reactor Vessel Head Meridonal Weld - Scans 3 and 4

Scale : 1" = 5"

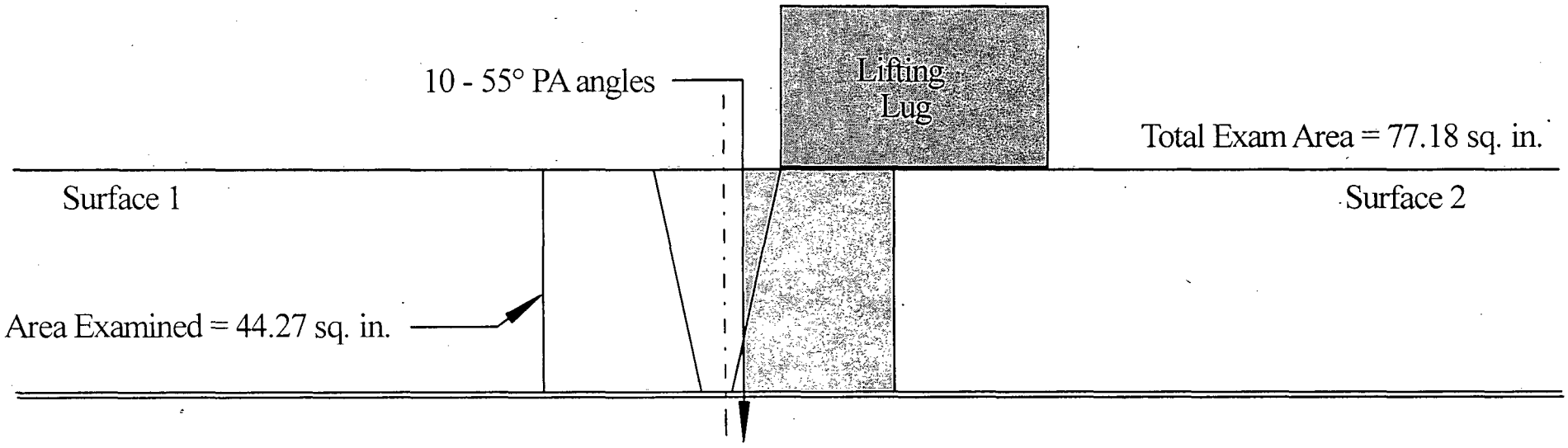

% Coverage S3 and S4 = 44.27 / 77.18 x 100 = 57.4%

10/3/07

Item No. : C2.B1.22.0001
Weld No. : 2RPV-101-104A
PAGE 5 OF 6

Reactor Vessel Head Meridional Weld - Additional Scan 3

Scale : 1" = 5"

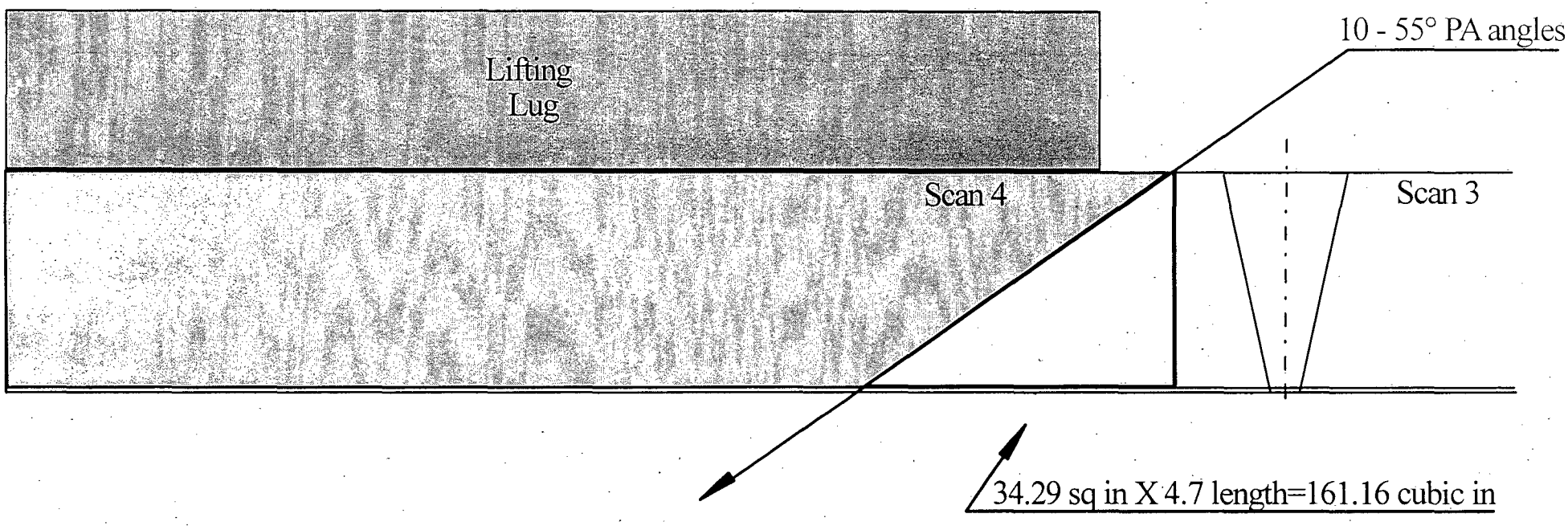

Additional Scan 3 Coverage as calculated below:
This is beneath the lug on the surface 2 side of the lug.
Additional % Coverage S3 = 161.16 / 1659.40 x 100 = 9.7%

Total exam volume:
77.18 sq in X 21.5 in = 1659.70 cubic in

Total % Coverage Scan 3 = 9.7 + 57.4 = 67.1%

10/3/07

Item No. : C2.B1.22.0001
Weld No. : 2RPV-101-104A

UT Vessel Examination

Duke Energy

Site/Unit:	Catawba / 2	Procedure:	NDE-640	Outage No.:	C2-15
Summary No.:	C2.B3.110.0002	Procedure Rev.:	4	Report No.:	UT-07-716
Workscope:	ISI	Work Order No.:	01728377	Page:	1 of 1

Code: 1998/2000A Cat./Item: B-D/B3.110 Location:

Drawing No.: CNM 2201.01-110/1 Description: Nozzle to Head

System ID: NC

Component ID: 2PZR-W2 Size/Length: N/A Thickness/Diameter: 3.000 / 12.750

Limitations: Yes - See Limitation Coverage attached to UT Report UT-07-718 Start Time: 2021 Finish Time: 2040

Examination Surface: Inside ☐ Outside ☑ Surface Condition: AS GROUND

Lo Location: 9.2.3 Wo Location: Centerline of Weld Couplant: ULTRAGEL II Batch No.: 06125

Temp. Tool Mfg.: D.A.S Serial No.: MCNDE32823 Surface Temp.: 85 °F

Cal. Report No.: CAL-07-708

Angle Used	0	45	45T	60	60T	
Scanning dB	42.5					

Indication(s): Yes ☐ No ☑ Scan Coverage: Upstream ☑ Downstream ☑ CW ☑ CCW ☑

Comments:

Results: Accept ☑ Reject ☑ Info ☐ 9/16/07

Percent Of Coverage Obtained > 90%: No - 81.7% Reviewed Previous Data: Yes

Examiner Level II-N Howard, Dean M.	Signature Dean Howard	Date 9/16/2007	Reviewer	Signature JH	Date 9/20/07
Examiner Level II-N Huhe, Troy	Signature Troy Huhe	Date 9/16/2007	Site Review N/A	Signature	Date
Other Level N/A N/A	Signature	Date 9/16/2007	ANII Review Rodney Sam	Signature	Date 9/24/07

Relief Request # 08-CN-001 Attachment C

AJH 1/15/08

UT Vessel Examination

Duke Energy

Site/Unit:	Catawba / 2	Procedure:	NDE-820	Outage No.:	C2-15
Summary No.:	C2.B3.110.0002	Procedure Rev.:	2	Report No.:	UT-07-718
Workscope:	ISI	Work Order No.:	01728377	Page:	1 of 7

Code: 1998/2000A Cat./Item: B-D/B3.110 Location:

Drawing No.: CNM 2201.01-110/1 Description: Nozzle to Head

System ID: NC

Component ID: 2PZR-W2 Size/Length: N/A Thickness/Diameter: 3.000 / 12.750

Limitations: Yes-See Attached Limitaton Report Start Time: 2041 Finish Time: 2200

Examination Surface: Inside ☐ Outside ☑ Surface Condition: AS GROUND

Lo Location: 9.2.3 Wo Location: Centerline of Weld Couplant: ULTRAGEL II Batch No.: 06125

Temp. Tool Mfg.: D.A.S Serial No.: MCNDE32823 Surface Temp.: 85 °F

Cal. Report No.: CAL-07-709, CAL-07-710, CAL-07-711

Angle Used	0	45	45T	60	60T	35/35T
Scanning dB		67.8	67.8	68.0	68.0	62.3

Indication(s): Yes ☐ No ☑ Scan Coverage: Upstream ☑ Downstream ☑ CW ☑ CCW ☑

Comments:

Results: Accept ☐ Reject ☑ Info ☐

Percent Of Coverage Obtained > 90%: No - 81.7% Reviewed Previous Data: Yes

Examiner Howard, Dean M.	Level II-N	Signature Dean Howard	Date 9/16/2007	Reviewer		Signature III	Date 9/20/07
Examiner Huhe, Troy	Level ~~II-N~~	Signature	Date 9/16/2007	Site Review N/A		Signature	Date
Other N/A	Level N/A	Signature	Date 9/16/2007	ANII Review		Signature	Date 9/24/07

AJH 1/15/08

Pressurizer Spray Nozzle to Head % of Coverage

Item No. : C2.B3.110.0002 **Weld No. : 2PZR-W2**

Weld Coverage

Scan	Angle	% Coverage Obtained
S1	35°	100
S2	35°	76.1
S1	45°	100
S2	45°	58.9
CW	35°	100
CW	45°	100
CCW	35°	100
CCW	45°	100
	Total	735

735 ÷ 8 = **91.9** % Coverage

Base Material Coverage

S1	35°,45°&60°	90.5
CW & CCW	45°&35°	64.5
	Total	155

155 ÷ 2 = **77.5** % Coverage

0° Scan Coverage = **75.6** % Coverage

Aggregate Coverage = Weld + Base Material + 0° ÷ 3

= **81.7** **% Coverage**

Inspector / Date : JM 5/15/07

Pressurizer Spray Nozzle to Head

Total Area Weld & Base Material

Item No. :C2.B3.110.0002

Weld No. : 2PZR-W2

Scale 1" = 2"

Total Weld Area = 3.48 sq. in.

Total Area of Base Material = 3.99 + 4.26 = 8.25 sq. in.

Total Exam Area = 3.99 + 4.26 + 3.48 = 11.73 sq. in.

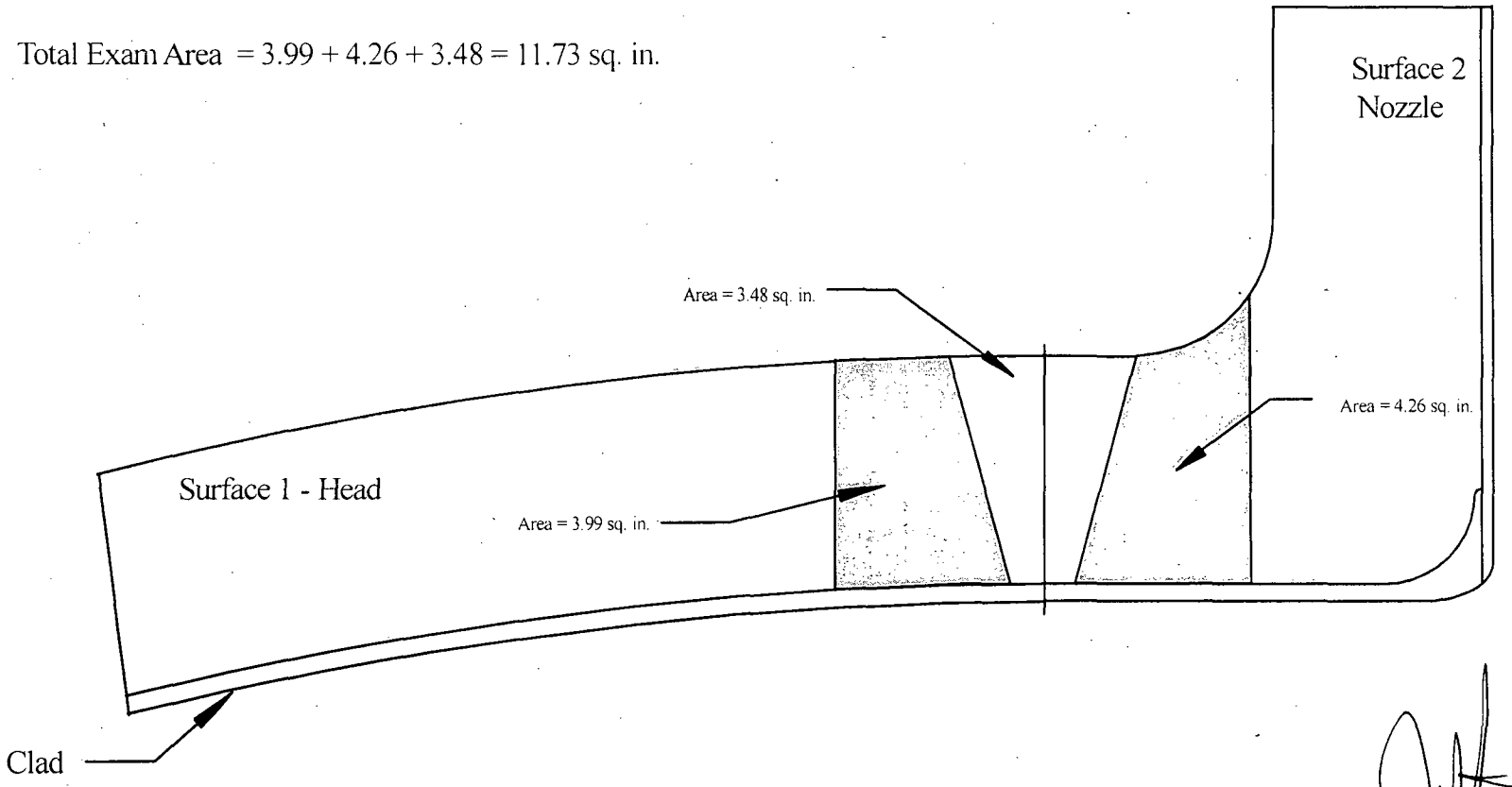

Inspector / Date : _____ 9/19/07

Pressurizer Spray Nozzle to Head

0° Scan Coverage

Item No. : C2.B3.110.0002

Weld No. :2PZR-W2

Scale 1" = 2"

0° Scan Total Area = 8.87 sq. in.

Total 0° Scan Coverage = 8.87 / 11.73 x 100 = 75.6 %

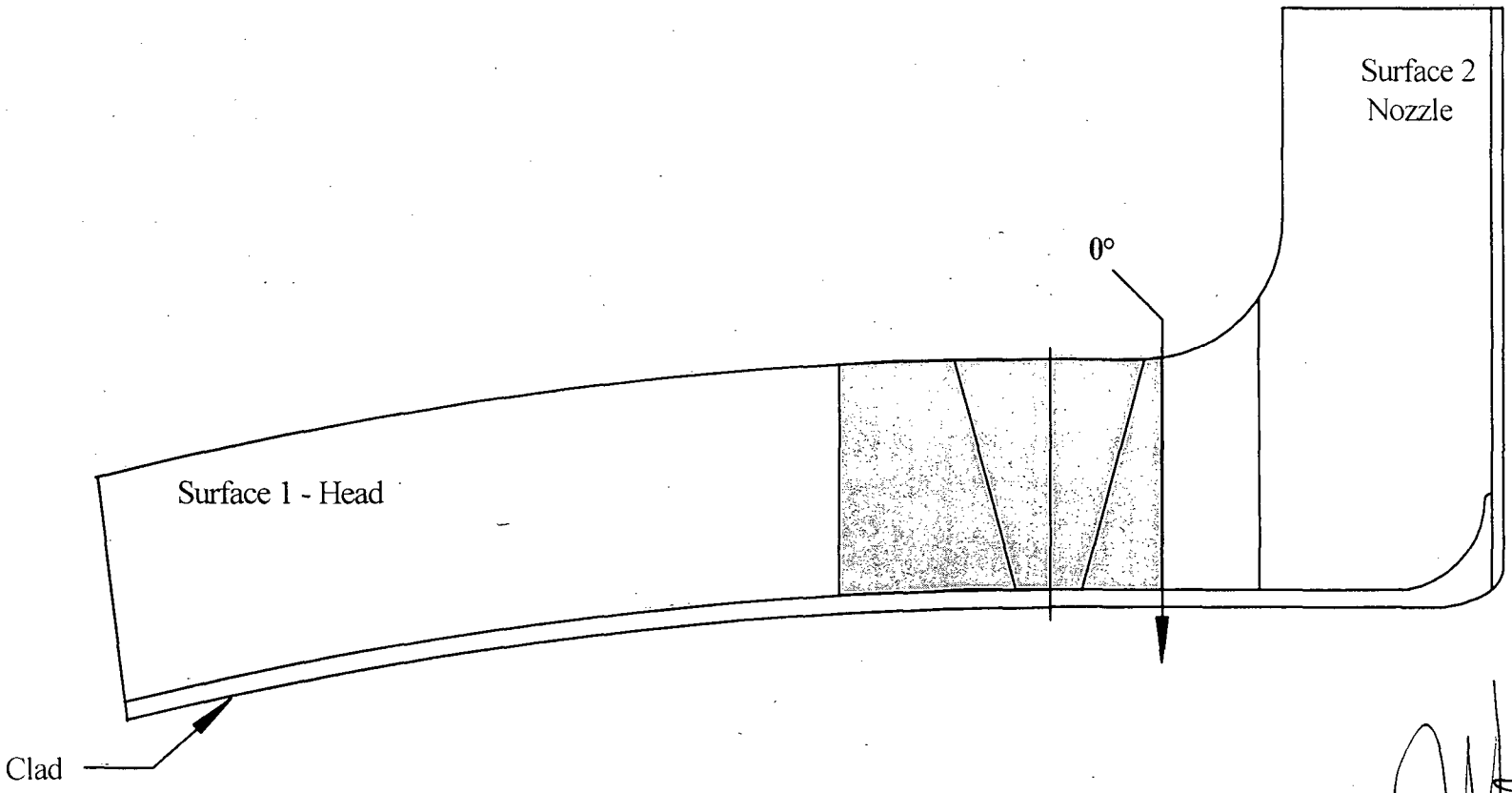

Inspector / Date : III 9/19/07

Page 4 **of** 7

Pressurizer Spray Nozzle to Head

Base Material Coverage - Circumferential Scans

Item No. : C2.B3.110.0002

Weld No. : 2PZR-W2

Scale 1" = 2"

Total Area of Base Material = 3.99 + 1.33 = 5.32 sq. in.

Total Base Material Coverage = 5.32 / 8.25 x 100 = 64.5 %

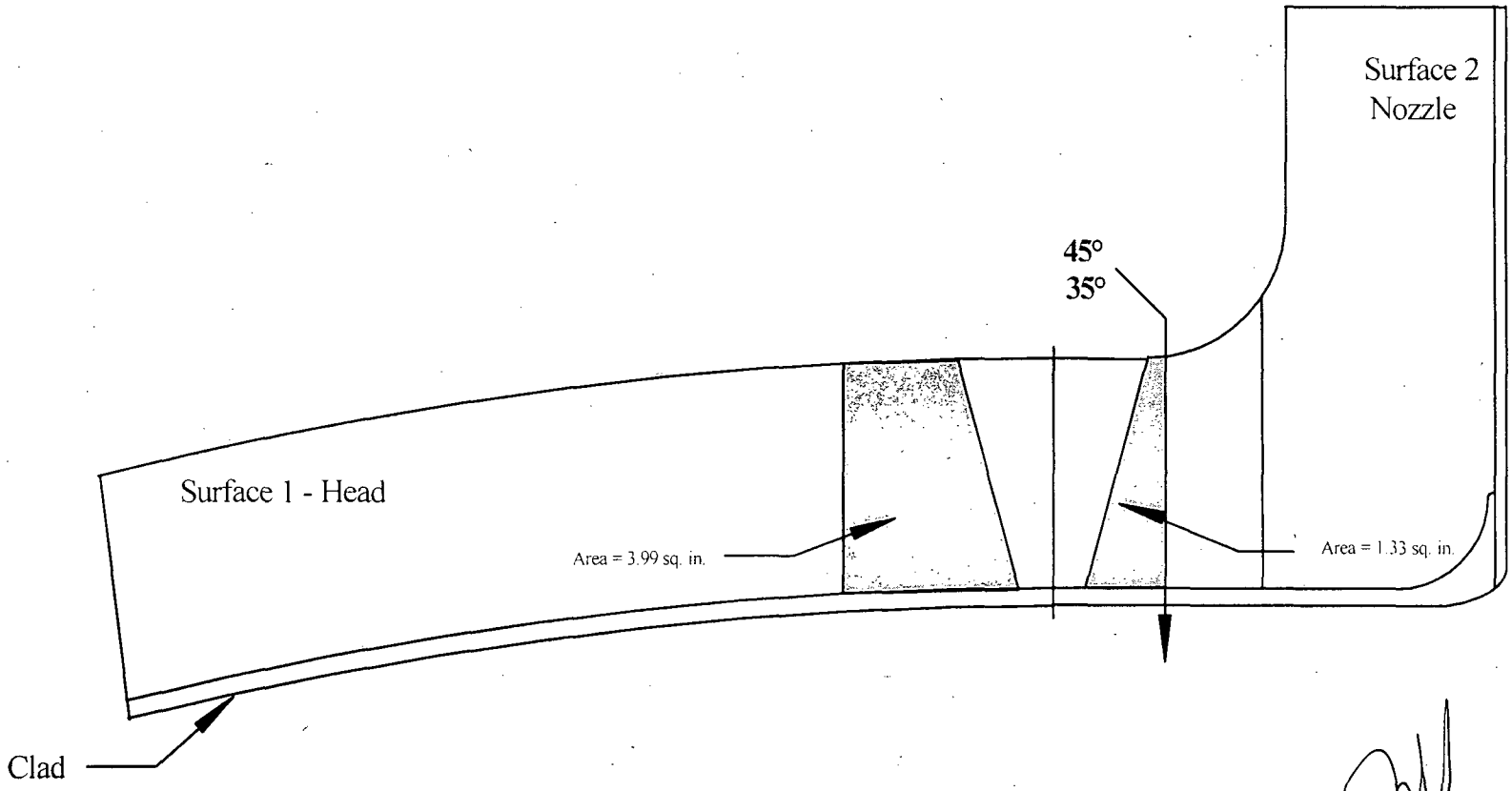

Inspector / Date : [signature] III 9/19/07

Pressurizer Spray Nozzle to Head

Base Material Coverage - Axial Scans

Item No. : C2.B3.110.0002

Weld No. : 2PZR-W2

Scale 1" = 2"

Total Area of Base Material = 3.99 + 3.48 = 7.47 sq. in.

Total Base Material Coverage = 7.47 / 8.25 x 100 = 90.5 %

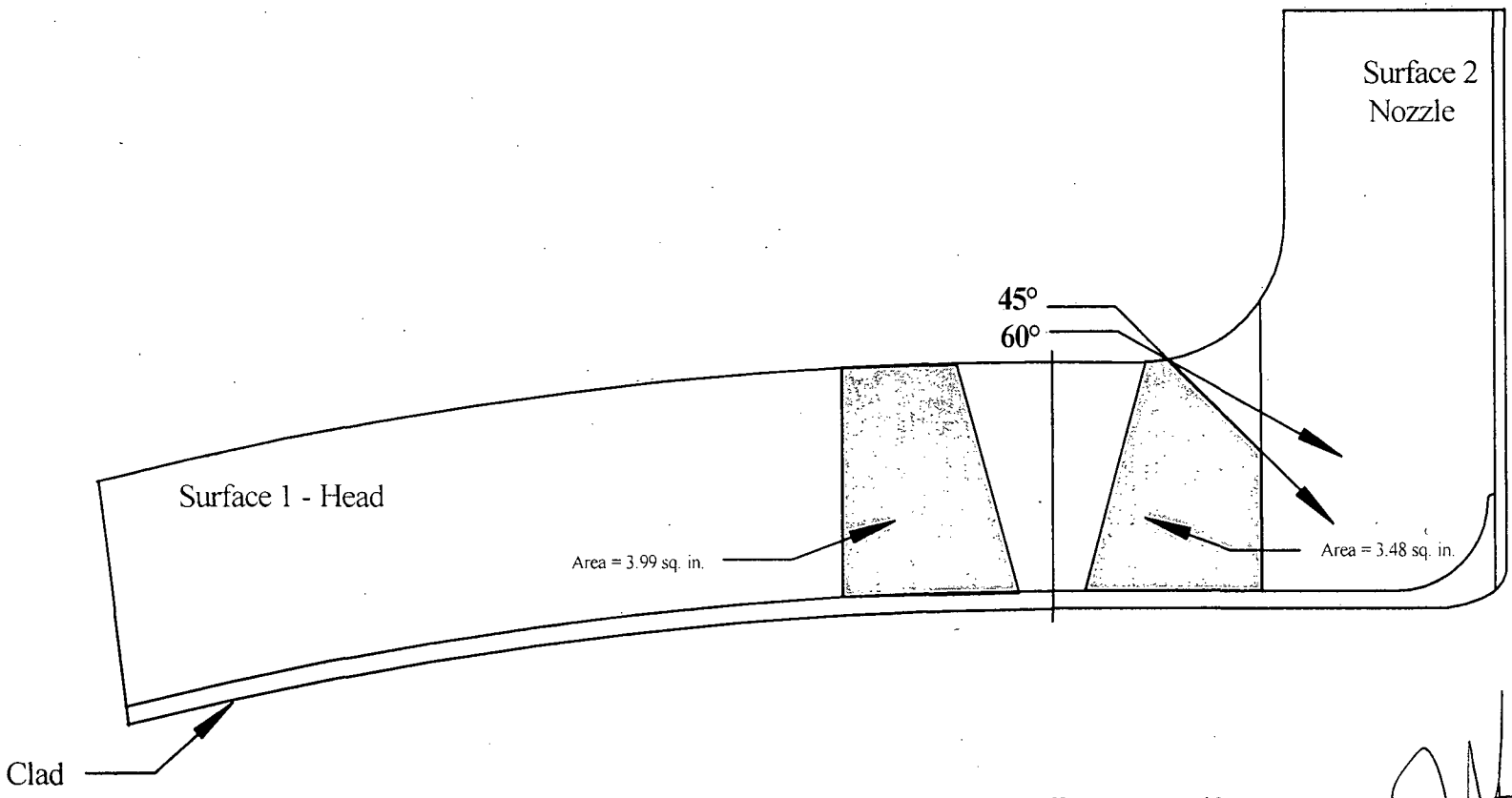

Inspector / Date : _____ III 9/19/07

Pressurizer Spray Nozzle to Head

Weld Coverage - Axial & Circumferential Scans

Item No. : C2.B3.110.0002

Weld No. : 2PZR-W2

Scale 1" = 2"

100% Coverage 35° & 45° Scans CW, CCW and Axial from Surface 1

Total Weld Coverage 35° from Surface 2 = 2.65 / 3.48 x 100 = 76.1 %

Total Weld Coverage 45° from Surface 2 = 2.05 / 3.48 x 100 = 58.9 %

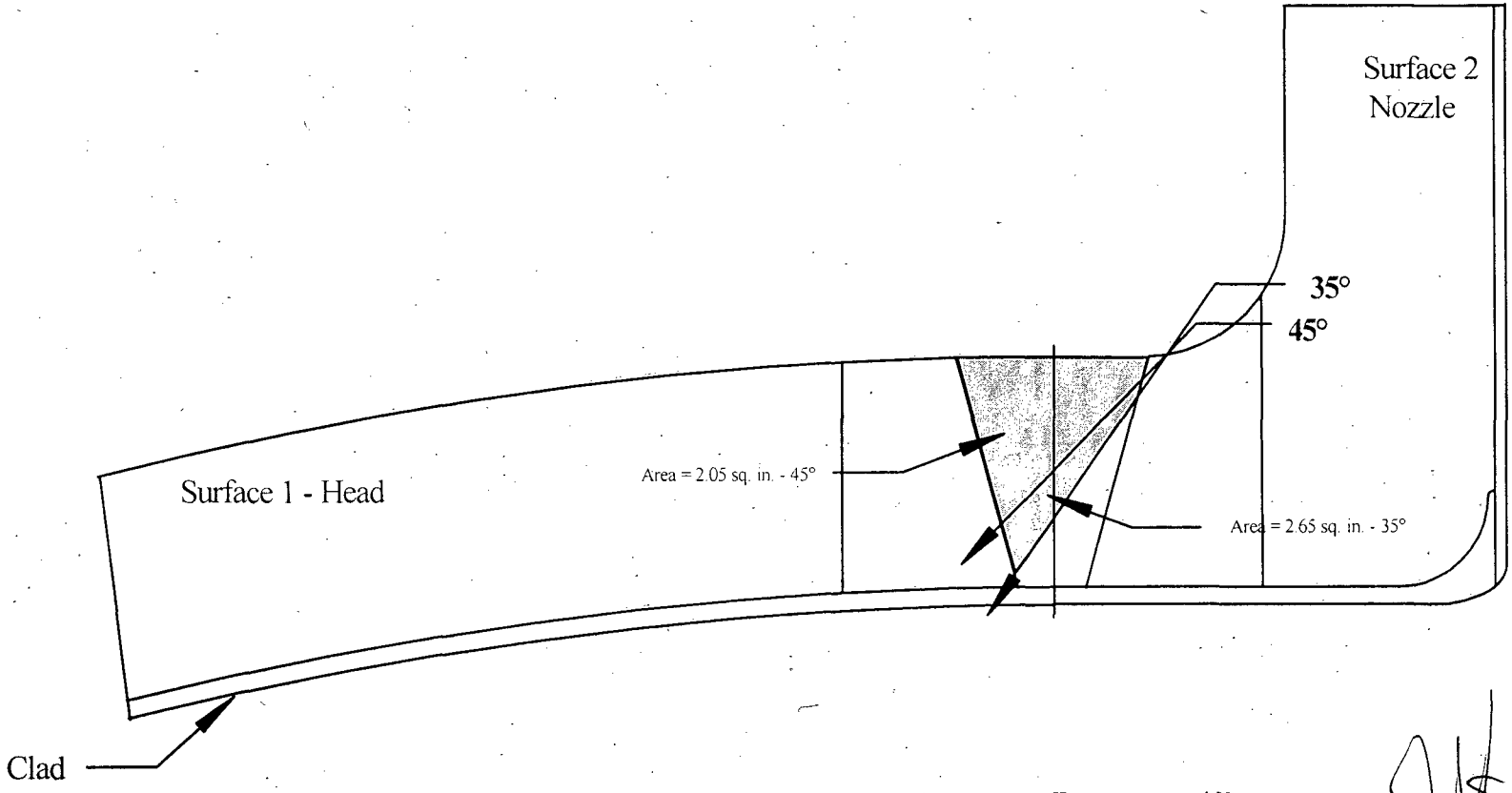

Inspector / Date : _____ III 9/19/07

UT Vessel Examination

Duke Energy

Site/Unit:	Catawba / 2	Procedure:	NDE-640	Outage No.:	C2-15
Summary No.:	C2.B3.110.0006	Procedure Rev.:	4	Report No.:	UT-07-717
Workscope:	ISI	Work Order No.:	01728377	Page:	1 of 1

Code: 1998/2000A Cat./Item: B-D/B3.110 Location:

Drawing No.: CNM 2201.01-110/1 Description: Nozzle to Head

System ID: NC

Component ID: 2PZR-W4C Size/Length: N/A Thickness/Diameter: 3.000 / 15.000

Limitations: Yes-See Limitation Coverage attached to UT Report UT-07-719 Start Time: 2021 Finish Time: 2040

Examination Surface: Inside ☐ Outside ☑ Surface Condition: AS GROUND

Lo Location: 9.2.3 Wo Location: Centerline of Weld Couplant: ULTRAGEL II Batch No.: 06125

Temp. Tool Mfg.: D.A.S Serial No.: MCNDE32823 Surface Temp.: 85 °F

Cal. Report No.: CAL-07-708

Angle Used	0	45	45T	60	60T	
Scanning dB	42.5					

Indication(s): Yes ☐ No ☑ Scan Coverage: Upstream ☑ Downstream ☑ CW ☑ CCW ☑

Comments:

Results: Accept ☑ Reject ☑ Info ☐ 9/19/07

Percent Of Coverage Obtained > 90%: No - 81.2% Reviewed Previous Data: Yes

Examiner Level II-N Howard, Dean M.	Signature Dean Howard	Date 9/16/2007	Reviewer	Signature III	Date 9/20/07
Examiner Level II-N Huhe, Troy	Signature Troy Huhe	Date 9/16/2007	Site Review N/A	Signature	Date
Other Level N/A N/A	Signature	Date 9/16/2007	ANII Review	Signature Rodney Sam	Date 9/24/07

Relief Request # 08-CN-001 Attachment D

AH 1/15/08

UT Vessel Examination

Duke Energy

Site/Unit:	Catawba / 2	Procedure:	NDE-820	Outage No.:	C2-15
Summary No.:	C2.B3.110.0006	Procedure Rev.:	2	Report No.:	UT-07-719
Workscope:	ISI	Work Order No.:	01728377	Page:	1 of 7

Code: 1998/2000A Cat./Item: B-D/B3.110 Location:

Drawing No.: CNM 2201.01-110/1 Description: Nozzle to Head

System ID: NC

Component ID: 2PZR-W4C Size/Length: N/A Thickness/Diameter: 3.000 / 15.000

Limitations: Yes-See Attached Limitaton Report Start Time: 2041 Finish Time: 2200

Examination Surface: Inside ☐ Outside ☑ Surface Condition: AS GROUND

Lo Location: 9.2.3 Wo Location: Centerline of Weld Couplant: ULTRAGEL II Batch No.: 06125

Temp. Tool Mfg.: D.A.S Serial No.: MCNDE32823 Surface Temp.: 85 °F

Cal. Report No.: CAL-07-709, CAL-07-710, CAL-07-711

Angle Used	0	45	45T	60	60T	35/35T
Scanning dB		67.8	67.8	68.0	68.0	62.3

Indication(s): Yes ☐ No ☑ Scan Coverage: Upstream ☑ Downstream ☑ CW ☑ CCW ☑

Comments:

Results: Accept ☐ Reject ☑ Info ☐

Percent Of Coverage Obtained > 90%: No - 81.2% Reviewed Previous Data: Yes

Examiner Howard, Dean M.	Level II-N	Signature Dean Howard	Date 9/16/2007	Reviewer		Signature III	Date 9/20/07
Examiner Huhe, Troy	Level II-N	Signature T Huhe	Date 9/16/2007	Site Review N/A		Signature	Date
Other N/A	Level N/A	Signature	Date 9/16/2007	ANII Review		Signature Rodney Sam	Date 9/24/07

AJH 1/15/08

Pressurizer Safety/Relief Nozzle to Head % of Coverage

Item No. : C2.B3.110.0006 **Weld No. : 2PZR-W4C**

Weld Coverage

Scan	Angle	% Coverage Obtained
S1	35°	100
S2	35°	82.4
S1	45°	100
S2	45°	61.4
CW	35°	100
CW	45°	100
CCW	35°	100
CCW	45°	100
	Total	743.8

743.8 ÷ 8 = **93.0** % Coverage

Base Material Coverage

S1	35°,45°&60°	89.3
CW & CCW	45°&35°	63.1
	Total	152.4

152.4 ÷ 2 = **76.2** % Coverage

0° Scan Coverage = **74.3** % Coverage

Aggregate Coverage = Weld + Base Material + 0° ÷ 3

= **81.2** **% Coverage**

Inspector / Date : _____ III 9/19/07

Pressurizer Safety / Relief Nozzle to Head
Total Area Weld & Base Material

Item No. : C2.B3.110.0006

Weld No. : 2PZR-W4C

Scale 1" = 2"

Total Weld Area = 3.29 sq. in.

Total Area of Base Material = 3.59 + 3.87 = 7.46 sq. in.

Total Exam Area = 3.59 + 3.29 + 3.87 = 10.75 sq. in.

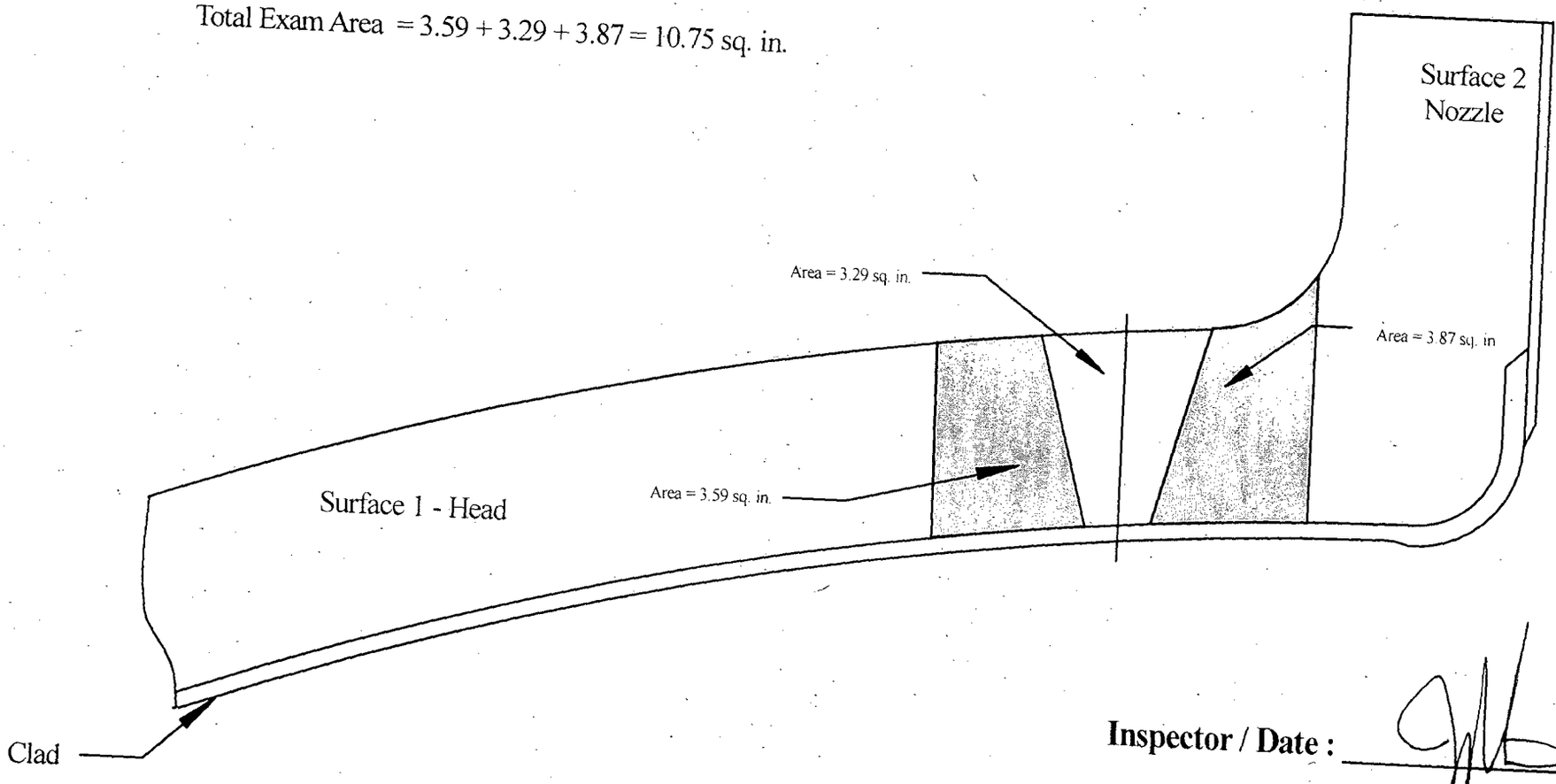

Inspector / Date : _____ III 9/19/07

Pressurizer Safety / Relief Nozzle to Head

0° Scan Coverage

Item No. : C2.B3.110.0006

Weld No. : 2PZR-W4C

0° Scan Total Area = 7.99 sq. in.

Total 0° Scan Coverage = 7.99 / 10.75 x 100 = 74.3 %

Scale 1" = 2"

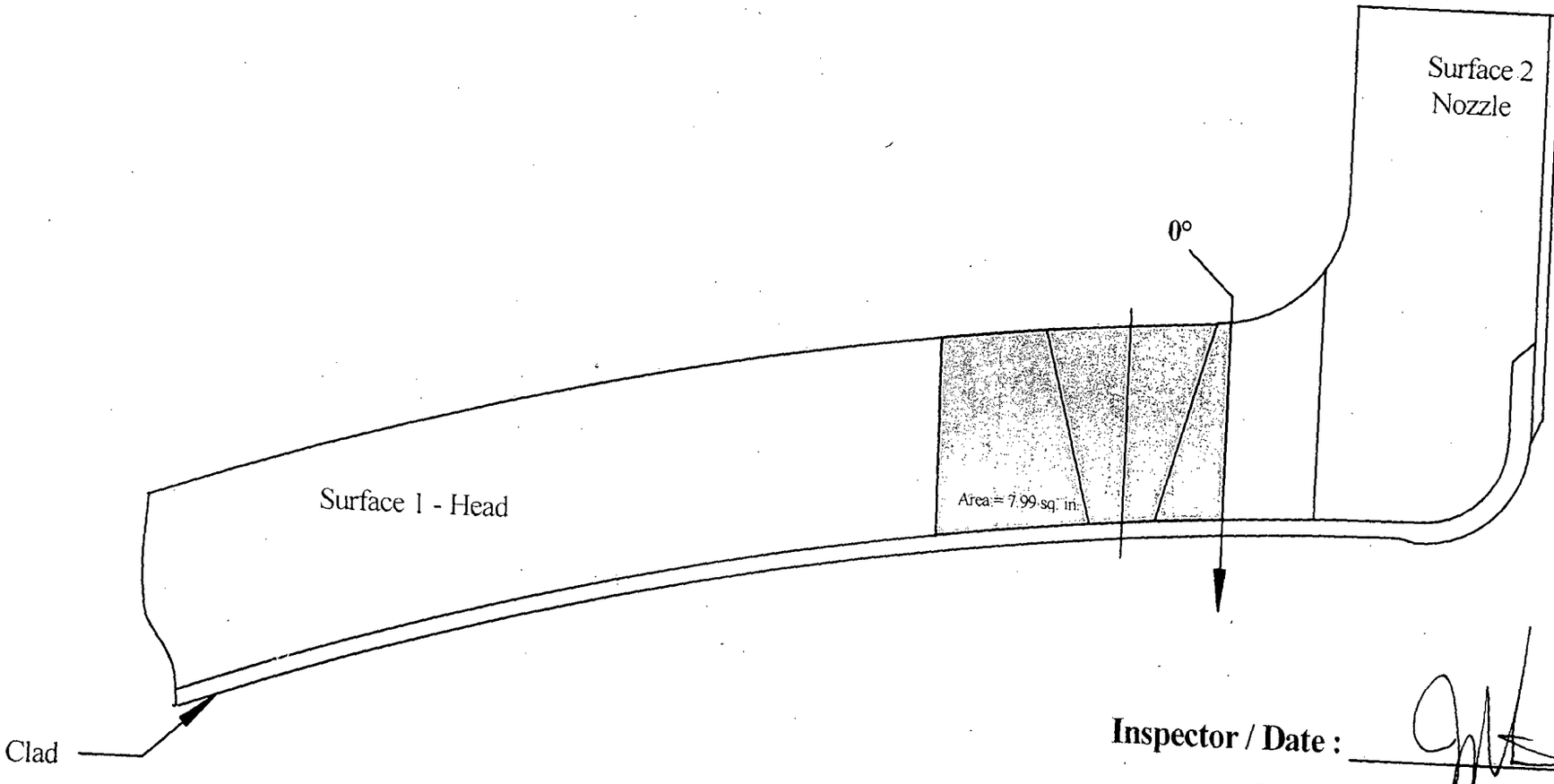

Inspector / Date : III 9/19/07

Pressurizer Safety / Relief Nozzle to Head

Weld Coverage - Axial & Circumferential Scans

Item No. : C2.B3.110.0006

Weld No. : 2PZR-W4C

Scale 1" = 2"

100% Coverage 35° & 45° Scans CW, CCW ans Axial from Surface 1

Total Weld Coverage 35° from Surface 2 = 2.71 / 3.29 x 100 = 82.4%

Total Weld Coverage 45° from Surface 2 = 2.02 / 3.29 x 100 = 61.4%

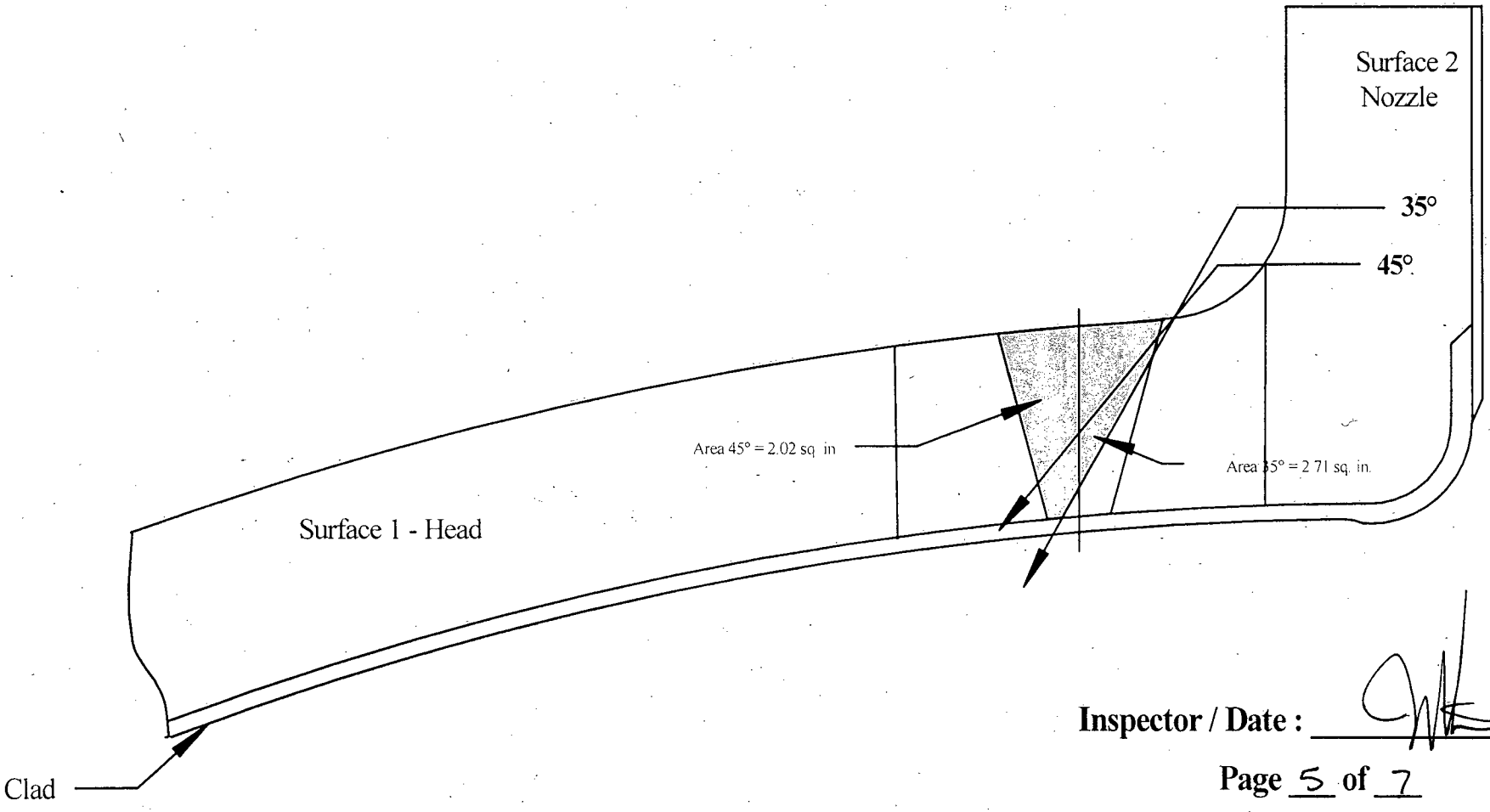

Inspector / Date : _____ III 9/19/07

Pressurizer Safety / Relief Nozzle to Head

Base Material Coverage - Circumferential Scans

Item No. : C2.B3.110.0006

Weld No. : 2PZR-W4C

Scale 1" = 2"

Total Area of Base Material = 3.59 + 1.12 = 4.71 sq. in.

Total Base Material Scan Coverage = 4.71 / 7.46 x 100 = 63.1 %

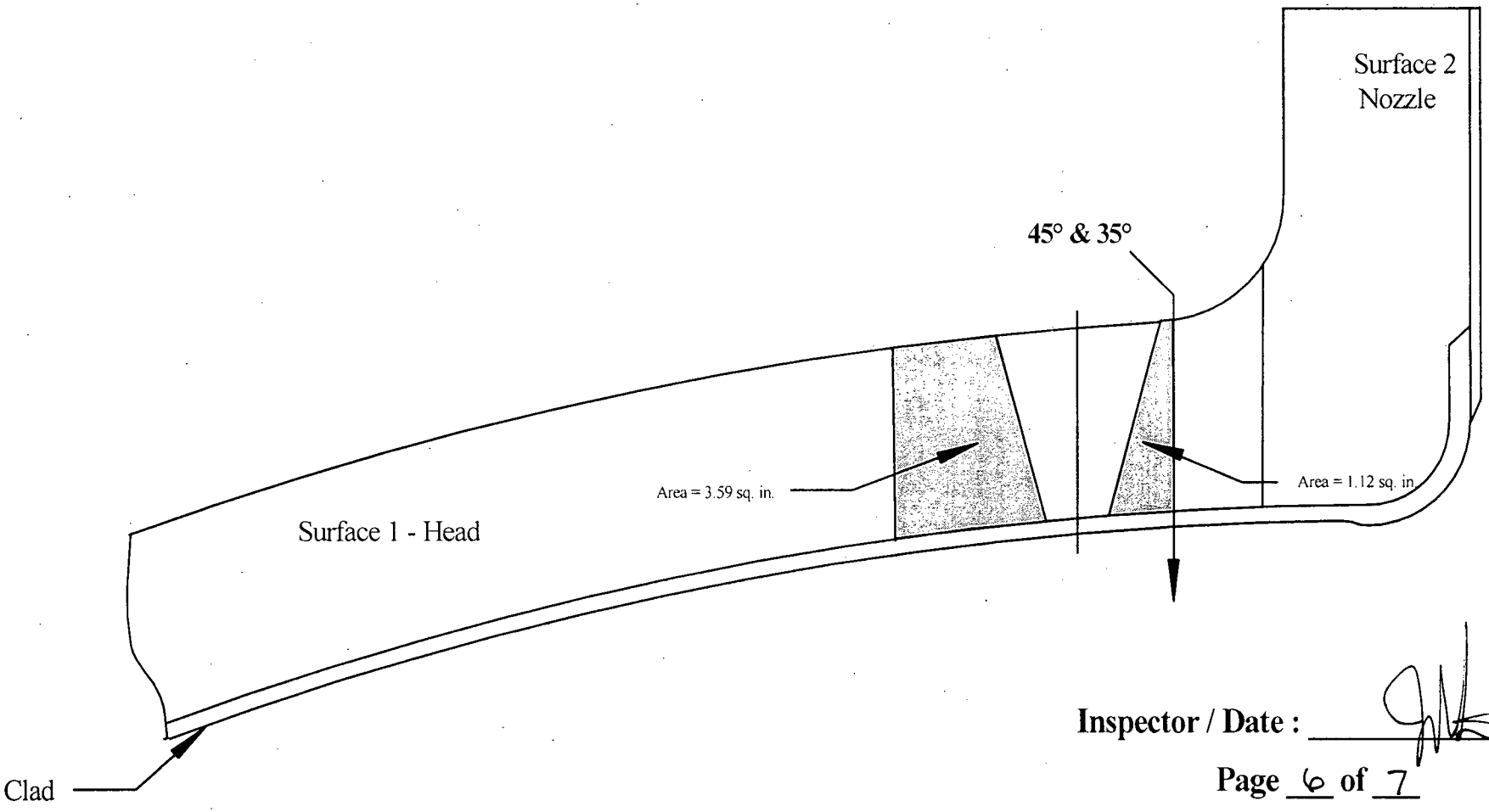

Inspector / Date : JTC 9/19/07

Pressurizer Safety / Relief Nozzle to Head

Base Material Coverage - Axial Scans

Item No. : C2.B3.110.0006

Weld No. : 2PZR-W4C

Scale 1" = 2"

Total Area of Base Material = 3.59 + 3.07 = 6.66 sq. in.

Total Base Material Scan Coverage = 6.66 / 7.46 x 100 = 89.3 %

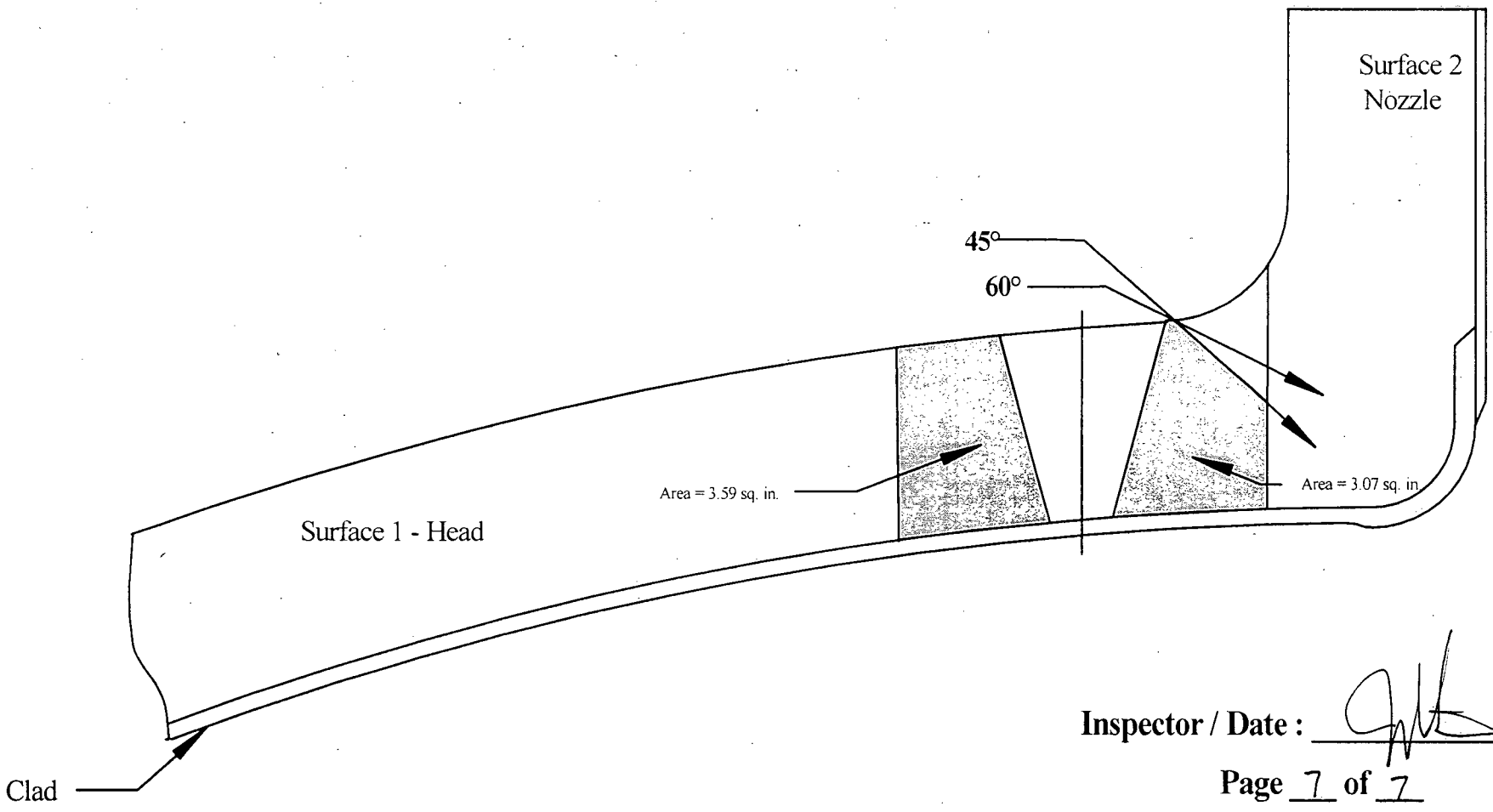

Inspector / Date : _____ III 9/19/07

Duke Energy

UT Pipe W[illegible] Examination

Site/Unit:	Catawba / 2	Procedure:	NDE-600	Outage No.:	C2-15
Summary No.:	C2.B9.11.0037	Procedure Rev.:	17	Report No.:	UT-07-868
Workscope:	ISI	Work Order No.:		Page:	1 of 4

Code: 1998/2000A Cat./Item: B-J/B9.11 Location:

Drawing No.: CN-2NC-25 Description: Elbow to Valve 2NI157

System ID: NC

Component ID: 2NC25-5 Size/Length: N/A Thickness/Diameter: 0.719 / 6.000

Limitations: Yes - See attached limitation Calculations Start Time: 0812 Finish Time: 1005

Examination Surface: Inside ☐ Outside ☑ Surface Condition: AS GROUND

Lo Location: 9.1.1.1 Wo Location: Centerline of Weld Couplant: ULTRAGEL II Batch No.: 06125

Temp. Tool Mfg.: D.A.S Serial No.: MCNDE32811 Surface Temp.: 74 °F

Cal. Report No.: CAL-07-805, CAL-07-806, CAL-07-807, CAL-07-808

Angle Used	0	45	45T	60	60L	70
Scanning dB			38	48	55	46.7

Indication(s): Yes ☐ No ☑ Scan Coverage: Upstream ☑ Downstream ☑ CW ☑ CCW ☑

Comments:

Results: Accept ☐ Reject ☑ Info ☐

Percent Of Coverage Obtained > 90%: No - 64.6% Reviewed Previous Data: Yes

Examiner Level II-N Moss, Gary J.	Signature Gary Moss	Date 10/16/2007	Reviewer	Signature [illegible]	Date 10/18/07
Examiner Level III-N Stauffer, Lester, E.	Signature [illegible]	Date 10/16/2007	Site Review	Signature	Date
Other Level N/A N/A	Signature	Date 10/16/2007	ANII Review	Signature [illegible]	Date 10/19/07

Relief Request # 08-CN-001 Attachment E

DUKE ENERGY COMPANY

ISI LIMITATION REPORT

Summary #: C2.B9.11.0037 **Component ID** 2SM51-01 **remarks:** Valve Configuration

☐ NO SCAN SURFACE BEAM DIRECTION

☒ LIMITED SCAN ☐ 1 ☒ 2 ☒ 1 ☐ 2 ☐ cw ☐ ccw

FROM L _____ to L _____ INCHES FROM W0 0.9 to Beyond

ANGLE: ☐ 0 ☐ 45 ☒ 60 other 70 FROM 0 DEG to 360 DEG

☐ NO SCAN SURFACE BEAM DIRECTION

☐ LIMITED SCAN ☐ 1 ☐ 2 ☐ 1 ☐ 2 ☐ cw ☐ ccw

FROM L _____ to L _____ INCHES FROM W0 _____ to _____

ANGLE: ☐ 0 ☐ 45 ☐ 60 other _____ FROM _____ DEG to _____ DEG

☐ NO SCAN SURFACE BEAM DIRECTION

☐ LIMITED SCAN ☐ 1 ☐ 2 ☐ 1 ☐ 2 ☐ cw ☐ ccw

FROM L _____ to L _____ INCHES FROM W0 _____ to _____

ANGLE: ☐ 0 ☐ 45 ☐ 60 other _____ FROM _____ DEG to _____ DEG

☐ NO SCAN SURFACE BEAM DIRECTION

☐ LIMITED SCAN ☐ 1 ☐ 2 ☐ 1 ☐ 2 ☐ cw ☐ ccw

FROM L _____ to L _____ INCHES FROM W0 _____ to _____

ANGLE: ☐ 0 ☐ 45 ☐ 60 other _____ FROM _____ DEG to _____ DEG

Sketch(s) attached ☒ yes ☐ No

Prepared By: Gary Moss Level: II Date: 10/16/2007 Sheet 2 of 4

Reviewed By: Date: Authorized Inspector: Date: 10/19/07

Scale : 1" = 1"

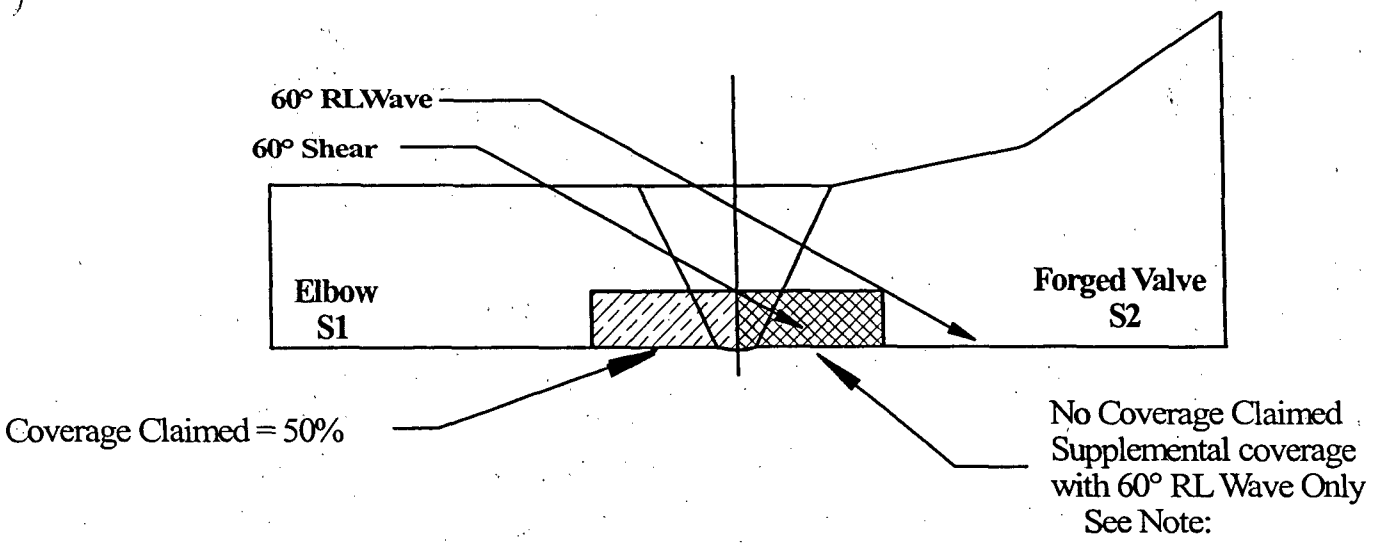

Note: 60° RL scan not included in percentage coverage due to requirements of 10CFR50.55a(b)(2)(xv)(A)(1). Best effort scan with 60° RL obtained 50% coverage in one axial direction.

Axial Scans from Surface 1

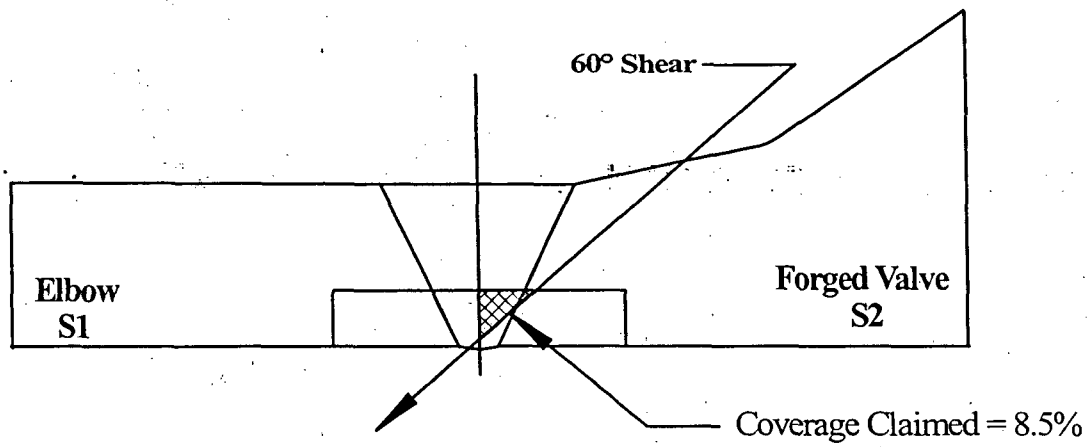

Total Exam Area = 0.434 sq. in. % Coverage from S2 = 0.037 / 0.434 x 100 = 8.5%

Axial Scan from Surface 2

Inspector / Date: JL 10/17/07

% Coverage Calculations

Item No. : C2.B9.11.0037 **Weld No. : 2NC25-5**

Aggregate Coverage Calculation

S1 = Elbow	**50 %**	(100% of the Length x 50% of the Volume)
S2 = Valve	**8.5 %**	(100% of the Length x 8.5% of the Volume)
S3 = CW	**100 %**	(100% of the Length x 100% of the Volume)
S4 = CCW	**100 %**	(100% of the Length x 100% of the Volume)

Total = 258.5 ÷ 4 = 64.6% Aggregate Coverage

Inspector / Date: III 10/17/07 **Page** 4 **of** 4

Duke Energy

UT Pipe Weld Examination

Site/Unit:	Catawba / 2	Procedure:	PDI-UT-2	Outage No.:	C2-15
Summary No.:	C2.B9.11.0052	Procedure Rev.:	C	Report No.:	UT-07-752
Workscope:	ISI	Work Order No.:	01725289	Page:	1 of 4

Code: 1998/2000A Cat./Item: B-J/B9.11 Location:

Drawing No.: CN-2NC-43 Description: Pipe to Nozzle

System ID: NC

Component ID: 2NC43-13 Size/Length: N/A Thickness/Diameter: 1.125 / 12.000

Limitations: Yes - See Limitation Report Start Time: 1030 Finish Time: 1130

Examination Surface: Inside ☐ Outside ☑ Surface Condition: GROUND FLUSH

Lo Location: 9.1.1.1 Wo Location: Centerline of Weld Couplant: ULTRAGEL II Batch No.: 06125

Temp. Tool Mfg.: D.A.S Serial No.: MCNDE32823 Surface Temp.: 85 °F

Cal. Report No.: CAL-07-730, CAL-07-731, CAL-07-732

Angle Used	0	45	45T	60	60L	
Scanning dB		49.7	49.7	50.9	60.0	

Indication(s): Yes ☑ No ☐ Scan Coverage: Upstream ☑ Downstream ☐ CW ☑ CCW ☑

Comments:

Results: Accept ☐ Reject ☑ Info ☐

Percent Of Coverage Obtained > 90%: No - 62.5% Reviewed Previous Data: Yes

Examiner Level II-N Griebel, David M.	Signature	Date 9/24/2007	Reviewer DE Houser	Signature	Date 9/27/07
Examiner Level II-N Ransom, Greg	Signature	Date 9/24/2007	Site Review N/A	Signature	Date
Other Level N/A N/A	Signature	Date 9/24/2007	ANII Review Rodney Sen	Signature	Date 9/30/07

Relief Request # 08-CN-001 Attachment F

Ultrasonic Inspection Report

Duke Energy

Site/Unit:	Catawba / 2	Procedure:	PDI-UT-2	Outage No.:	C2-15
Summary No.:	C2.B9.11.0052	Procedure Rev.:	C	Report No.:	UT-07-752
Workscope:	ISI	Work Order No.:	01725289	Page:	2 of 4

Search Unit Angle: 45 °

Wo Location: Centerline of Weld

Lo Location: 9.1.1.1

(•) Piping Welds
( ) Ferritic Vessels ≥ 2"T
( ) Other

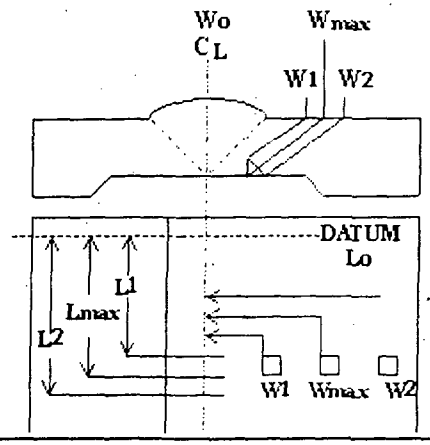

MP	Metal Path	Wmax	Distance From Wo To S.U. At Maximum Response
RBR	Remaining Back Reflection	W1	Distance From Wo At Of Max (Forward)
L	Distance From Datum	W2	Distance From Wo At Of Max (Forward)

Comments:

Scan #	Indication No.	% Of DAC	W Max W	W Max MP	Forward Of Max W1	Forward Of Max MP	Backward Of Max W2	Backward Of Max MP	L1 Of Max	L Max	L2 Of Max	RBR Amp.	Remarks
S2	1	75%	1.1	1.5	N/A	N/A	N/A	N/A	N/A	9.1.1.1	N/A	N/A	Root Geometry - 360 INT.

Examiner Griebel, David M.	Level II-N	Signature	Date 9/24/2007	Reviewer	Signature 9/27/07	Date
Examiner Ransom, Greg	Level II-N	Signature	Date 9/24/2007	Site Review N/A	Signature	Date
Other N/A	Level N/A	Signature	Date 9/24/2007	ANII Review	Signature 9/30/07	Date

Duke Energy.

Supplemen Report

Report No.: UT-07-52

Page: 3 of 4

Summary No.: C2.B9.11.0052

Examiner:	Griebel, David M. DMG	Level:	II-N	Reviewer:	[illegible]	Date:	9/29-07
Examiner:	Ransom, Greg Greg Ransom	Level:	II-N	Site Review:	N/A	Date:	
Other:	N/A	Level:	N/A	ANII Review:	Rodney [illegible]	Date:	9/30/07

Comments: Ind. #1 - 45° Root Geometry - 360° Intermittent. Verified with RT film review.

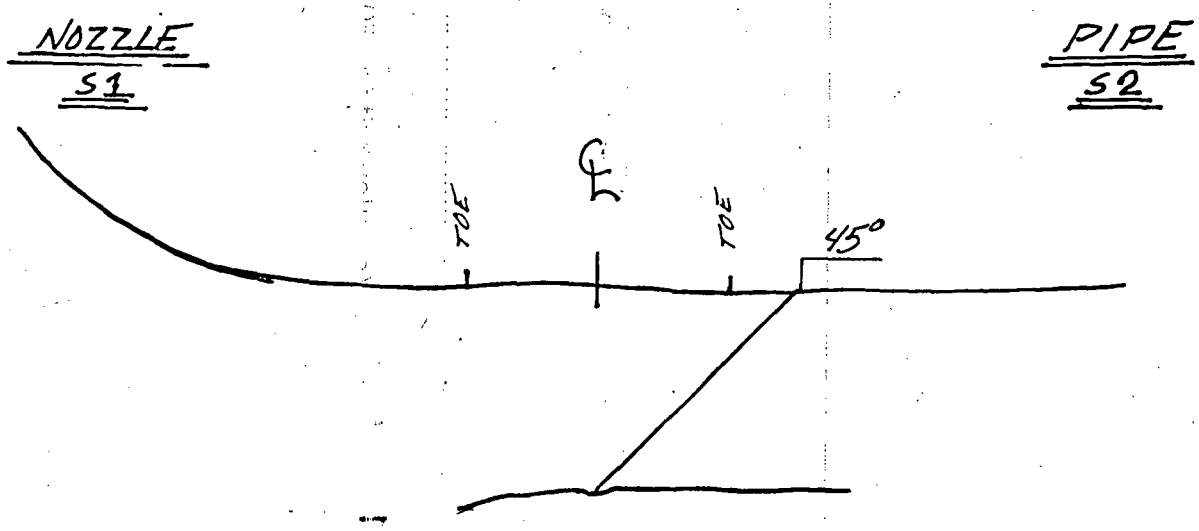

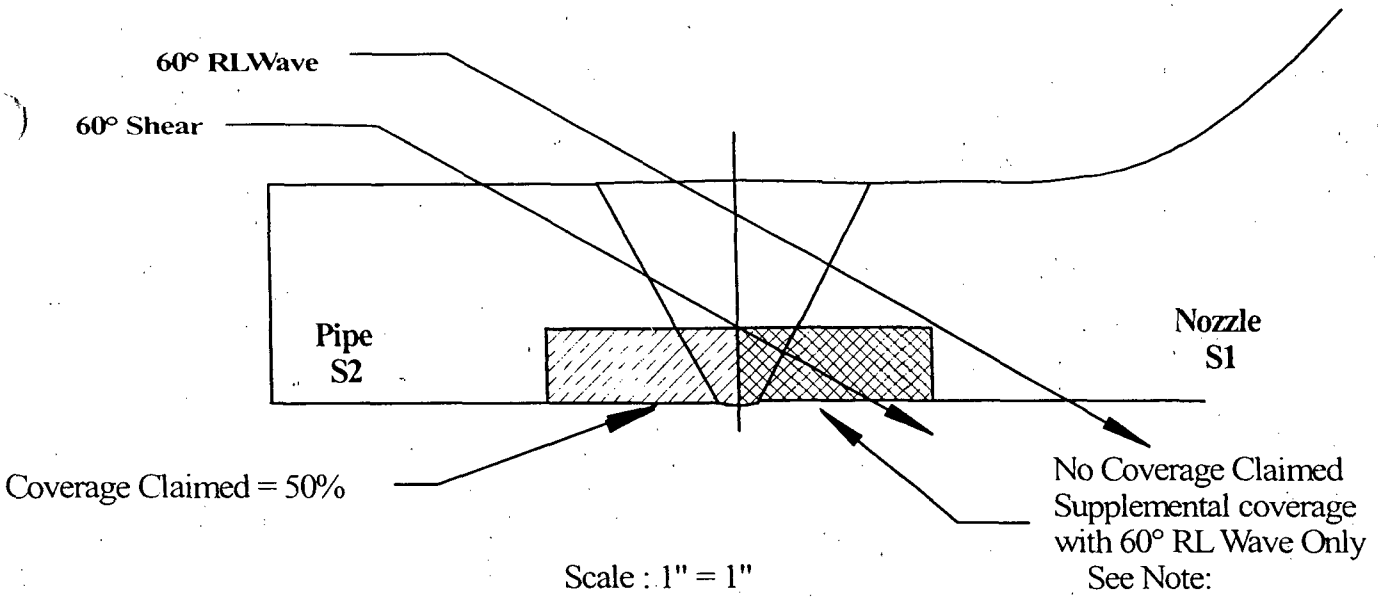

Note: 60°RL scan not included in percentage coverage due to requirements of 10CFR50.55a(b)(2)(xv)(A)(2). Best effort scan with 60°RL obtained 50% coverage in one axial direction.

% Coverage Calculations

S1 = Nozzle	=	0%	(100% of the length x 0% of the volume)
S2 = Pipe	=	50%	(100% of the length x 50% of the volume)
S3 = CW	=	100%	(100% of the length x 100% of the volume)
S4 = CCW	=	100%	(100% of the length x 100% of the volume)
Total	=	**250 / 4**	= **62.5 % Aggregate Coverage**

Inspector / Date : 9-24-07 Page 4 of 4

Duke Energy

UT Pipe W_d Examination

Site/Unit:	Catawba / 2	Procedure:	PDI-UT-2	Outage No.:	C2-15
Summary No.:	C2.B9.11.0099	Procedure Rev.:	C	Report No.:	UT-07-773
Workscope:	ISI	Work Order No.:	01725281	Page:	1 of 5

Code: 1998/2000A Cat./Item: B-J/B9.11 Location:

Drawing No.: CN-2NI-59 Description: Valve 2NI054A to Pipe

System ID: NI

Component ID: 2NI59-1 Size/Length: N/A Thickness/Diameter: 1.000 / 10.000

Limitations: Yes - See Attached Limitation Report Start Time: 1125 Finish Time: 1217

Examination Surface: Inside ☐ Outside ☑ Surface Condition: AS GROUND

Lo Location: 9.1.1.1 Wo Location: Centerline of Weld Couplant: ULTRAGEL II Batch No.: 06125

Temp. Tool Mfg.: D.A.S Serial No.: MCNDE32811 Surface Temp.: 73 °F

Cal. Report No.: CAL-07-752, CAL-07-753, CAL-07-754

Angle Used	0	45	45T	60	60L	
Scanning dB		39	39	55	68	

Indication(s): Yes ☑ No ☐ Scan Coverage: Upstream ☑ Downstream ☑ CW ☑ CCW ☑

Comments:

Results: Accept ☐ Reject ☑ Info ☐

Percent Of Coverage Obtained > 90%: No - 42.6% Reviewed Previous Data: Yes

Examiner Huhe, Troy	Level II-N	Signature	Date 9/30/2007	Reviewer	Doug Moss	Signature	Date 10/10/07
Examiner Stauffer, Lester, E.	Level III-N	Signature	Date 9/30/2007	Site Review N/A		Signature	Date
Other N/A	Level N/A	Signature	Date 9/30/2007	ANII Review	Rodney Sam	Signature	Date 10/10/07

Relief Request # 08-CN-001 Attachment G

Ultrasonic Indication Report

Duke Energy

Site/Unit:	Catawba / 2	Procedure:	PDI-UT-2	Outage No.:	C2-15
Summary No.:	C2.B9.11.0099	Procedure Rev.:	C	Report No.:	UT-07-773
Workscope:	ISI	Work Order No.:	01725281	Page:	2 of 5

Search Unit Angle: 60 / 60L °

Wo Location: Centerline of Weld

Lo Location: 9.1.1.1

(●) Piping Welds
( ) Ferritic Vessels ≥ 2"T
( ) Other

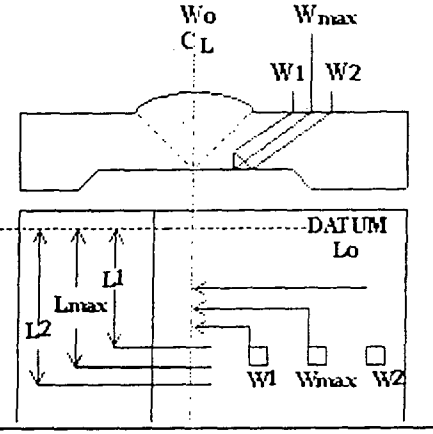

MP	Metal Path	Wmax	Distance From Wo To S.U. At Maximum Response
RBR	Remaining Back Reflection	W1	Distance From Wo At Of Max (Forward)
L	Distance From Datum	W2	Distance From Wo At Of Max (Forward)

Comments:

Scan #	Indication No.	% Of DAC	W Max W	W Max MP	Forward Of Max W1	Forward Of Max MP	Backward Of Max W2	Backward Of Max MP	L1 Of Max	L Max	L2 Of Max	RBR Amp.	Remarks
S2	1	100	1.40	1.91	N/A	N/A	N/A	N/A	360	0.0	N/A	N/A	Geometry - 60L Scan
S2	2	100	1.75	1.90	N/A	N/A	N/A	N/A	360	0.0	N/A	N/A	Geometry - 60° Scan

Examiner Huhe, Troy	Level II-N	Signature	Date 9/30/2007	Reviewer		Signature	Date 10-10-07
Examiner Stauffer, Lester, E.	Level III-N	Signature	Date 9/30/2007	Site Review N/A		Signature	Date
Other N/A	Level N/A	Signature	Date 9/30/2007	ANII Review		Signature	Date 10/10/07

Duke Energy

Supplemental Report

Report No.: UT-07-773

Page: 3 of 5

Summary No.: C2.B9.11.0099

Examiner:	Huhe, Troy	Level:	II-N	Reviewer:	Gary Moss	Date:	10-10-07
Examiner:	Stauffer, Lester, E.	Level:	III-N	Site Review:	N/A	Date:	
Other:	N/A	Level:	N/A	ANII Review:	Rodney Sam	Date:	10/10/07

Comments: **Ind. #1 & #2, I.D. geometry intermittent 360°. Verified previously recorded Ind.**

Sketch or Photo: Z:\UT\IDDEAL\ProfileLine2.jpg

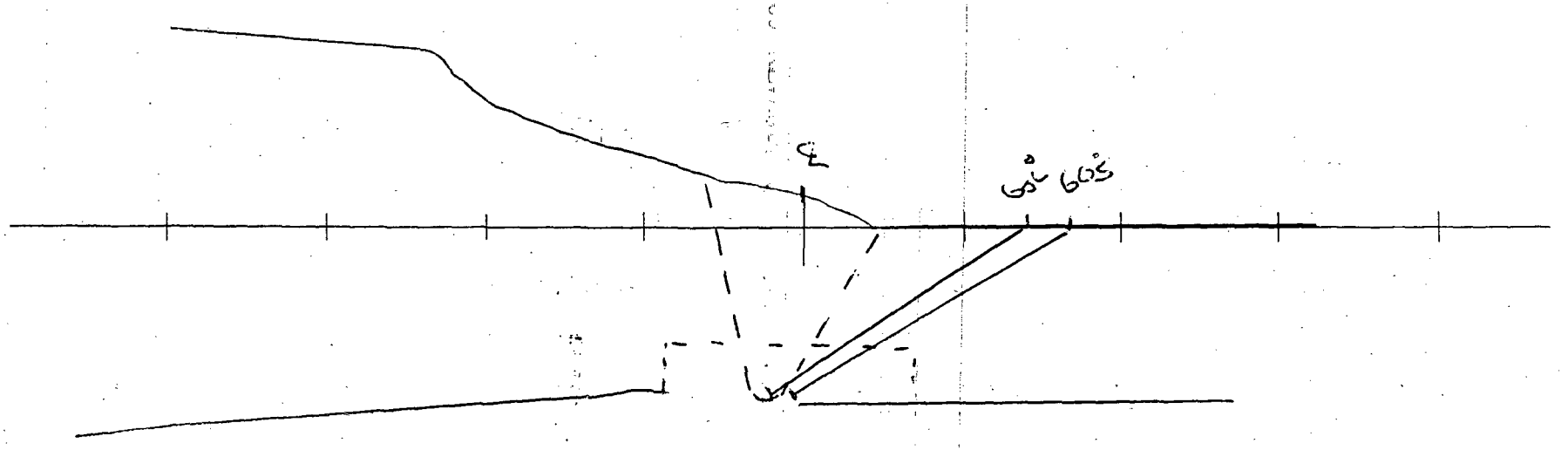

Item No. C2.B9.11.0099 **Weld No. 2NI59-1**

Axial Scans

Scale : 1" = 1"

Total Exam Area = 0.528 sq. in.

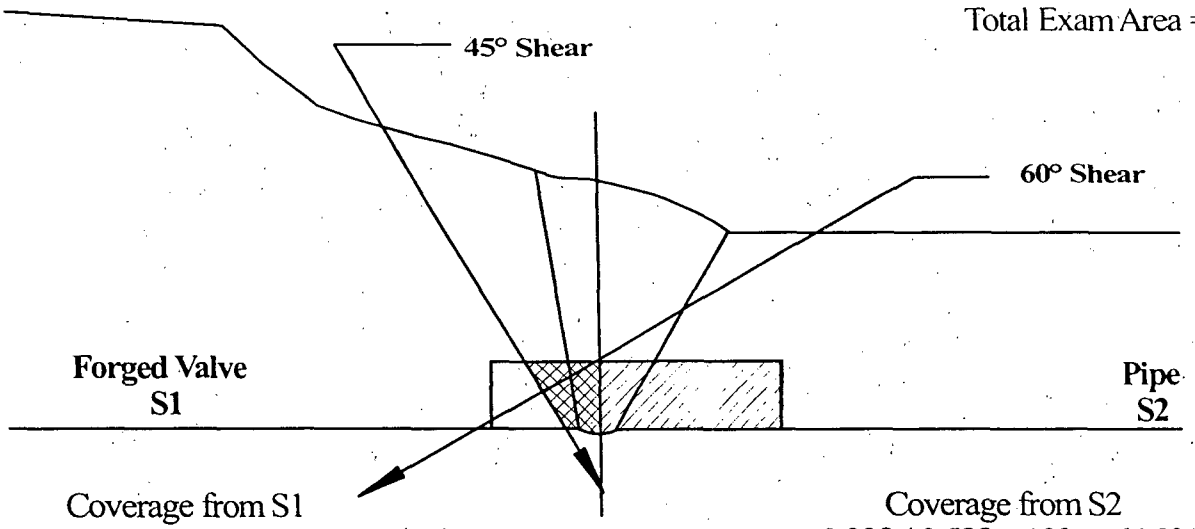

Coverage from S1
0.099 / 0.528 x 100 = 18.8%

Coverage from S2
0.339 / 0.528 x 100 = 64.2%

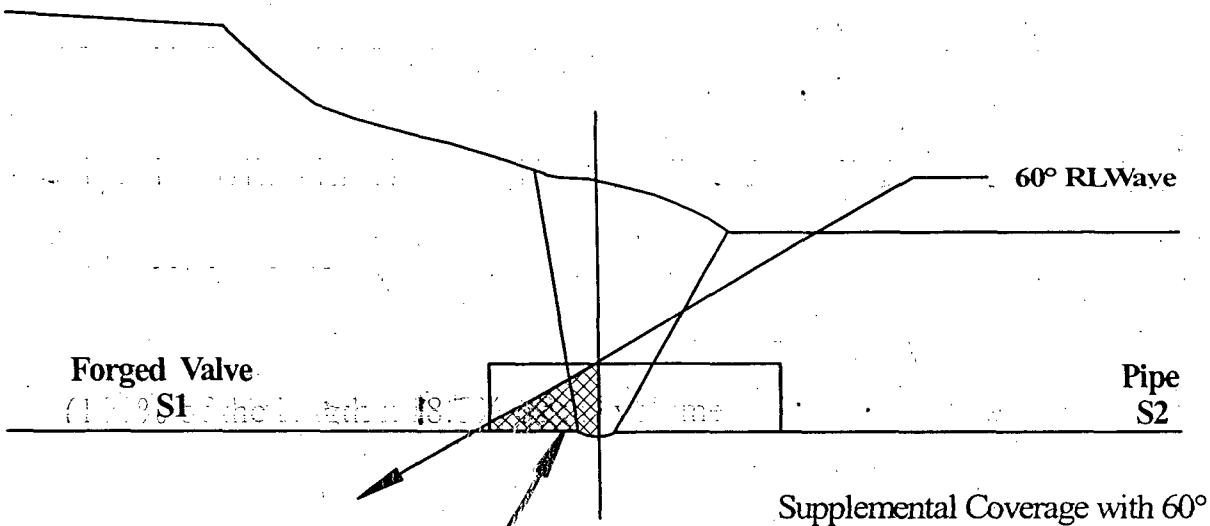

Supplemental Coverage with 60° RL
0..111 / 0.528 x 100 = 21.0%

No Coverage Claimed
Supplemental coverage
with 60° RL Wave Only
See Note:

Note: 60° RL scan not included in percentage coverage due to requirements of 10CFR50.55a(b)(2)(xv)(A)(1). Best effort scan with 60° RL obtained 21% coverage in one axial direction.

Inspector / Date: _____ III 10/3/07 Page 4 of 5

Item No. C2.B9.11.0099 Weld No. 2NI59-1

Circ. Scans

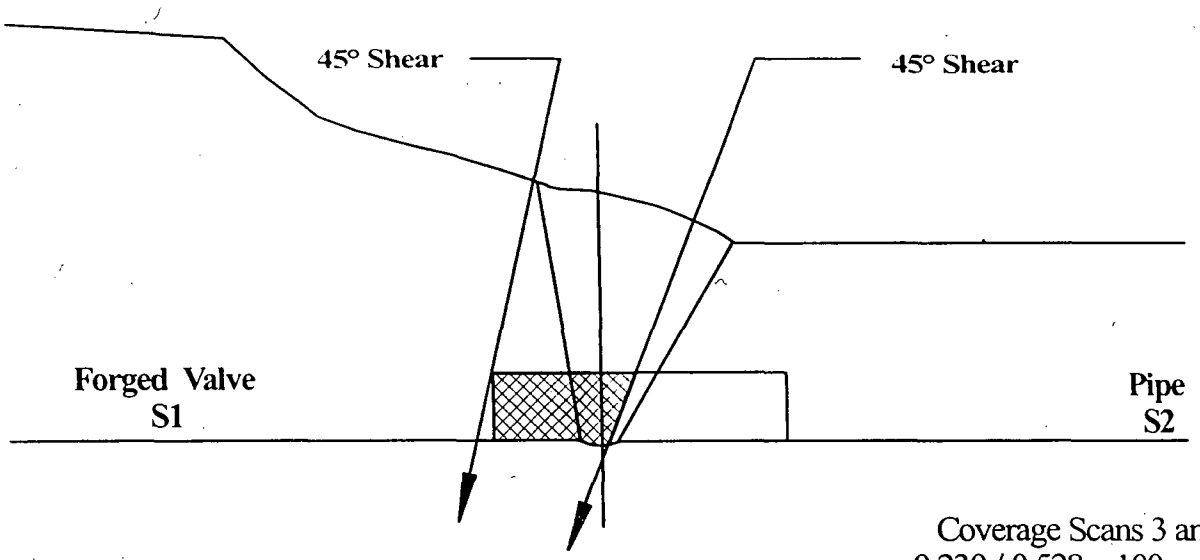

Coverage Scans 3 and 4
0.230 / 0.528 x 100 = 43.6%

Scale : 1" = 1"

Total Exam Area = 0.528 sq. in.

% Coverage Calculations

S1 = Valve	=	18.8%	(100% of the length x 18.8% of the volume)
S2 = Pipe	=	64.2%	(100% of the length x 64.2% of the volume)
S3 = CW	=	43.6%	(100% of the length x 43.6% of the volume)
S4 = CCW	=	43.6%	(100% of the length x 43.6% of the volume)
Total	=	**170.2 / 4**	= **42.6 % Aggregate Coverage**

Inspector / Date: _____ III 10/3/07

UT Vessel Examination

Duke Energy

Site/Unit:	Catawba / 2	Procedure:	NDE-3630	Outage No.:	C2-15
Summary No.:	C2.C1.20.0002	Procedure Rev.:	1	Report No.:	UT-07-807
Workscope:	ISI	Work Order No.:	01729263	Page:	1 of 6

Code: 1998/2000A Cat./Item: C-A/C1.20 Location:

Drawing No.: CN-ISIN3-2554-1.0 Description: Head to Flange

System ID: NV

Component ID: 2ELDHX-HD-FLG Size/Length: N/A Thickness/Diameter: 0.750 / 9.500

Limitations: Yes - See Attached Limitation Report Start Time: 0930 Finish Time: 1005

Examination Surface: Inside ☐ Outside ☑ Surface Condition: AS GROUND

Lo Location: Top of Vessel Wo Location: Centerline of Weld Couplant: ULTRAGEL II Batch No.: 06125

Temp. Tool Mfg.: D.A.S Serial No.: MCNDE32796 Surface Temp.: 69 °F

Cal. Report No.: CAL-07-785, CAL-07-786, CAL-07-787, CAL-07-788

Angle Used	0	45	45T	60	60T	45L
Scanning dB		42.8	42.8			71.1

Indication(s): Yes ☐ No ☑ Scan Coverage: Upstream ☑ Downstream ☑ CW ☑ CCW ☑

Comments:

70L was used for additional coverage on 10/15/07 (ref. report # CAL-07-788). Scanning dB for 70L was 58.8 - Upstream Coverage only Exam start time @ 1050, stop time @ 1100.

Results: Accept ☐ Reject ☑ Info ☐

Percent Of Coverage Obtained > 90%: No-30.6% Reviewed Previous Data: Yes

Examiner Level III-N Jones, Russel E.	Signature	Date 10/12/2007	Reviewer	Signature	Date 10/19/07
Examiner Level III-N Stauffer, Lester, E.	Signature	Date 10/12/2007	Site Review N/A	Signature	Date
Other Level N/A N/A	Signature	Date 10/2/2007	ANII Review	Signature	Date 10-23-07

Relief Request # 08-CN-001 Attachment H

Duke Energy.

Supplemental Report

Report No.: UT-07-807

Page: 2 of 6

Summary No.: C2.C1.20.0002

Examiner:	Jones, Russel E.	Level:	III-N	Reviewer:		Date:	10/19/07
Examiner:	Stauffer, Lester, E.	Level:	III-N	Site Review:	N/A	Date:	
Other:	N/A	Level:	N/A	ANII Review:		Date:	10-23-07

Comments:

Sketch or Photo: Z:\UT\IDDEAL\ProfileLine2.jpg

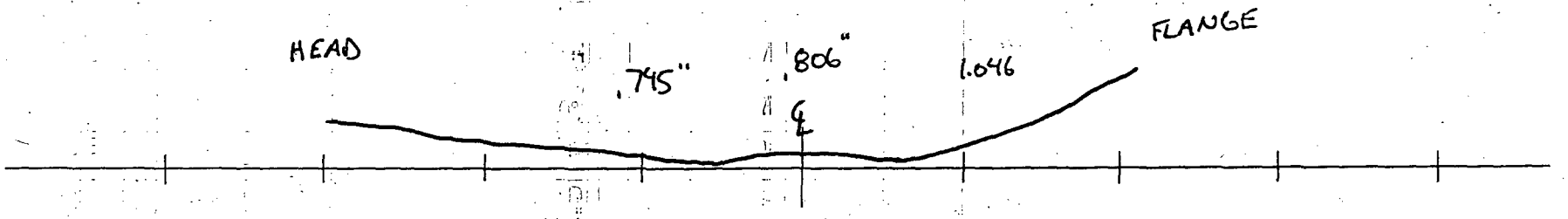

DUKE ENERGY COMPANY

ISI LIMITATION REPORT

Summary #: C2.C1.20.0002 **Component ID** 2ELDHX-HD-FLG **remarks:**

☒ NO SCAN SURFACE BEAM DIRECTION — Nozzle Connection

☐ LIMITED SCAN ☐ 1 ☒ 2 ☒ 1 ☐ 2 ☒ cw ☒ ccw

FROM L 26.0" to L 30.0" INCHES FROM W0 +0.5 to Beyond

ANGLE: ☐ 0 ☒ 45 ☐ 60 other 70° FROM ____ DEG to ____ DEG

☒ NO SCAN SURFACE BEAM DIRECTION — Nozzle Connection

☐ LIMITED SCAN ☐ 1 ☒ 2 ☒ 1 ☐ 2 ☒ cw ☒ ccw

FROM L 0.5" to L 3.5" INCHES FROM W0 +0.5 to Beyond

ANGLE: ☐ 0 ☒ 45 ☐ 60 other 70° FROM ____ DEG to ____ DEG

☒ NO SCAN SURFACE BEAM DIRECTION — Nozzle Connection

☐ LIMITED SCAN ☐ 1 ☒ 2 ☒ 1 ☐ 2 ☒ cw ☒ ccw

FROM L 11.0" to L 16.0" INCHES FROM W0 +0.5 to Beyond

ANGLE: ☐ 0 ☒ 45 ☐ 60 other 70° FROM ____ DEG to ____ DEG

☒ NO SCAN SURFACE BEAM DIRECTION — Nozzl Connection

☐ LIMITED SCAN ☐ 1 ☒ 2 ☒ 1 ☐ 2 ☒ cw ☒ ccw

FROM L 16.5" to L 18.5" INCHES FROM W0 +0.5 to Beyond

ANGLE: ☐ 0 ☒ 45 ☐ 60 other 70° FROM ____ DEG to ____ DEG

Sketch(s) attached ☒ yes ☐ No

Prepared By: Russel Jones Level: III Date: 10/12/2007 Sheet 3 of 6

Reviewed By: DE Howen Date: 10/19/07 Authorized Inspector: Date: 10-23-07

% Coverage Calculations

Item No. : C2.C1.20.0002 **Weld No. : 2ELDHX-HD-FLG**

HX Ø = **9.5"**

"t" = **0.750"**

Weld Length = **30"**

Limited a total of 15" due to 4 nozzles = 15 / 30 X 100 = 50% of the weld legth

Aggregate Coverage Calculation

Axial Scans

At 4 - Nozzles	**0 %**	(50% of the Length x 0% of the Volume)
Remaining Length	**29.7 %**	(50% of the Length x 59.4% of the Volume)
Total	**29.7 %**	

Circ. Scans

At 4 - Nozzles	**13.2 %**	(50% of the Length x 26.4% of the Volume)
Remaining Length	**18.2 %**	(50% of the Length x 36.3% of the Volume)
Total	**31.4 %**	

Total = 61.1 ÷ 2 = 30.6% Aggregate Coverage

Inspector / Date: [signature] III 10-15-07 **Page** 4 **of** 6

Scale : 1" = 1"

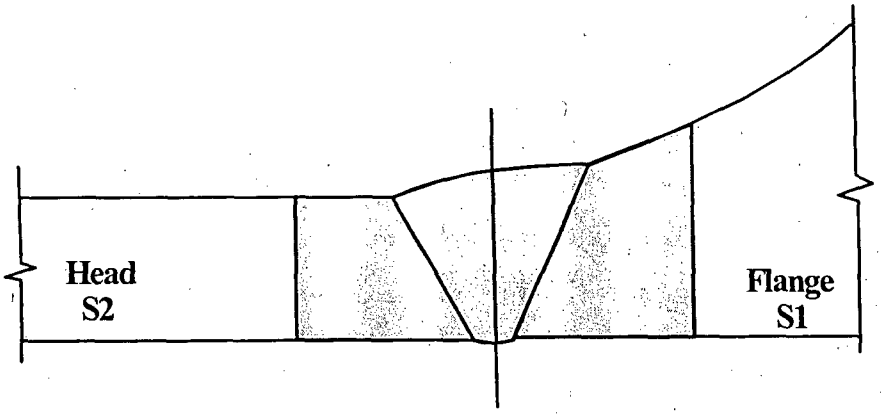

Total Exam Area = 1.75 sq. in.

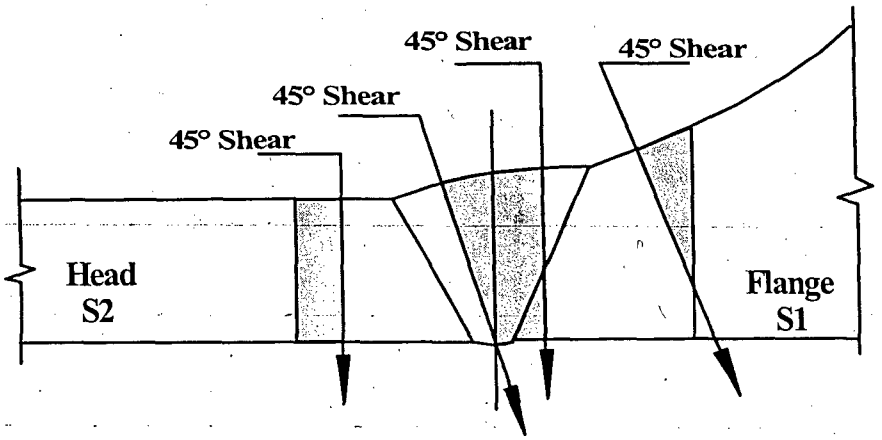

Circ. Coverage for 50% of the weld length

% Coverage in the Circ. direction = (0.173 + 0.344 + 0.118) / 1.75 x 100 = 36.3%

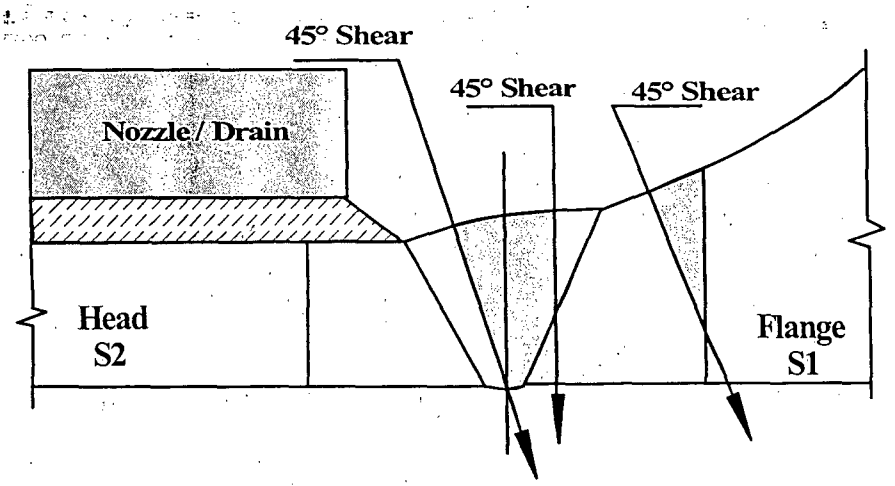

Circ. Coverage for 50% of the weld length due to Nozzles @ 4 locations

% Coverage in the Circ. direction = (0.344 + 0.118) / 1.75 x 100 = 26.4%

Inspector / Date : [signature] 10-15-07 Page 5 of 6

Scale : 1" = 1"

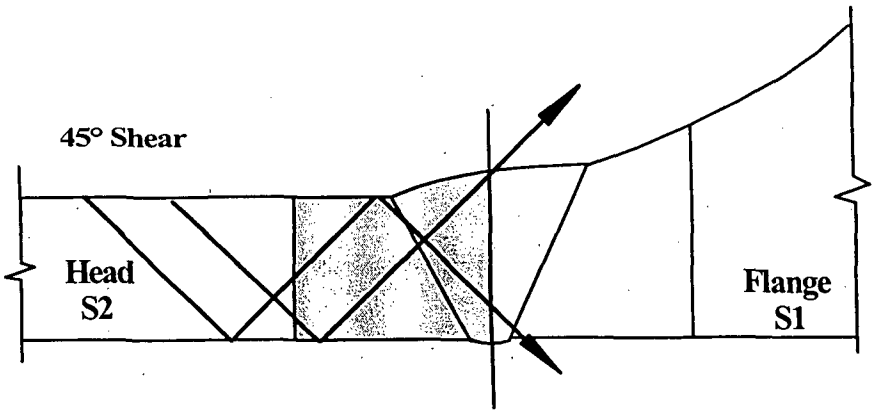

Axial Scan 45° Shear (ID / OD / ID Calibration)

% Coverage from S2 with Shear waves = 0.786 / 1.75 x 100 = 44.9%

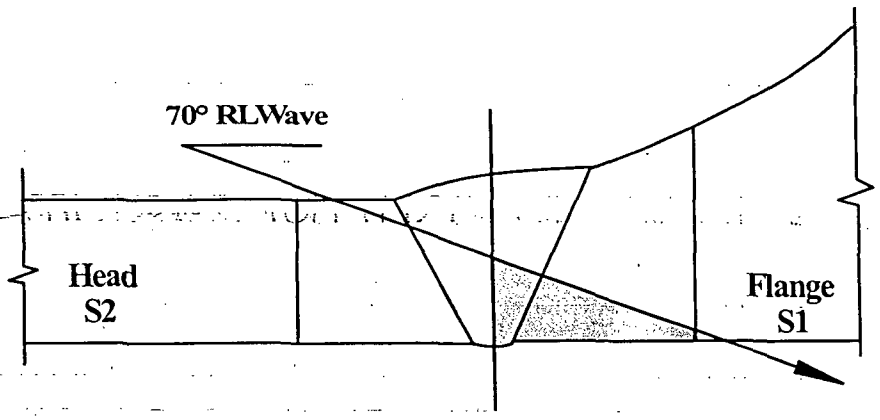

Axial Scan 70° RL

% Coverage From S2 with 70° RL = 0.253 / 1.75 x 100 = 14.5%

Total % Coverage From S2 with 70° RL and 45° shear = 14.5% + 44.9% = 59.4%

Inspector / Date : _____ 10-15-07 Page 4 of 4

Duke Energy.

UT Vessel Examination

Site/Unit:	Catawba / 2	Procedure:	NDE-3630	Outage No.:	C2-15
Summary No.:	C2.C1.20.0019	Procedure Rev.:	1	Report No.:	UT-07-864
Workscope:	ISI	Work Order No.:	01729262	Page:	1 of 3

Code: 1998/2000A Cat./Item: C-A/C1.20 Location:

Drawing No.: CN-ISIN3-2554-1.1 Description: Lower Head to Shell

System ID: NV

Component ID: 2VCT-LH-SH Size/Length: N/A Thickness/Diameter: 0.250 / 90.000

Limitations: Yes - See Attached Limitation Report Start Time: 0922 Finish Time: 0948

Examination Surface: Inside ☐ Outside ☑ Surface Condition: AS GROUND

Lo Location: 9.2.1 Wo Location: Centerline of Weld Couplant: ULTRAGEL II Batch No.: 06125

Temp. Tool Mfg.: D.A.S Serial No.: MCNDE32823 Surface Temp.: 86 °F

Cal. Report No.: CAL-07-802

Angle Used	0	45	45T	60	60T	
Scanning dB		55.8	55.8			

Indication(s): Yes ☐ No ☑ Scan Coverage: Upstream ☑ Downstream ☑ CW ☑ CCW ☑

Comments:

Results: Accept ☐ Reject ☑ Info ☐

Percent Of Coverage Obtained > 90%: No - 89.4% Reviewed Previous Data: Yes

Examiner Jones, Russel E.	Level III-N	Signature	Date 10/16/2007	Reviewer		Signature	Date 10/20/07
Examiner Ellis, Ken	Level II-N	Signature	Date 10/16/2007	Site Review N/A		Signature	Date
Other N/A	Level N/A	Signature	Date 10/16/2007	ANII Review		Signature	Date 10-23-07

Relief Request # 08-CN-001 Attachment I

Determination of Percent Coverage for UT Examinations - ~~Pipe~~ VESSEL < 2"

9/10/19/07

Site/Unit:	Catawba / 2	Procedure:	NDE-3630	Outage No.:	C2-15
Summary No.:	C2.C1.20.0019	Procedure Rev.:	1	Report No.:	UT-07-864
Workscope:	ISI	Work Order No.:	01729262	Page:	2 of 3

45 deg

Scan 1	89.400	% Length X	100.000	% volume of length / 100 =	89.400	% total for Scan 1
Scan 2	89.400	% Length X	100.000	% volume of length / 100 =	89.400	% total for Scan 2
Scan 3	89.400	% Length X	100.000	% volume of length / 100 =	89.400	% total for Scan 3
Scan 4	89.400	% Length X	100.000	% volume of length / 100 =	89.400	% total for Scan 4

Add totals and divide by # scans = 89.400 **% total for 45 deg**

Other deg - _____ (to be used for supplemental scans)

The data to be listed below is for coverage that was not obtained with the 45 deg scans.

Scan 1		% Length X		% volume of length / 100 =		% total for Scan 1
Scan 2		% Length X		% volume of length / 100 =		% total for Scan 2
Scan 3		% Length X		% volume of length / 100 =		% total for Scan 3
Scan 4		% Length X		% volume of length / 100 =		% total for Scan 4

Percent complete coverage

Add totals for each scan required and divide by # of scans to determine;

89.400 **% Total for complete exam**

Site Field Supervisor: _____ III Date: 10/19/07

DUKE ENERGY COMPANY

ISI LIMITATION REPORT

Summary #: C2.C1.20.0019 **Component ID** 2VCT-LH-SH

remarks:

☒ NO SCAN — SURFACE — BEAM DIRECTION

☐ LIMITED SCAN — ☒ 1 ☒ 2 — ☒ 1 ☒ 2 ☒ cw ☒ ccw

FROM L * to L * — INCHES FROM W0 CL to Beyond

ANGLE: ☐ 0 ☒ 45 ☐ 60 other ____ FROM ____ DEG to ____ DEG

☐ NO SCAN — SURFACE — BEAM DIRECTION

☐ LIMITED SCAN — ☐ 1 ☐ 2 — ☐ 1 ☐ 2 ☐ cw ☐ ccw

FROM L ____ to L ____ — INCHES FROM W0 ____ to ____

ANGLE: ☐ 0 ☐ 45 ☐ 60 other ____ FROM ____ DEG to ____ DEG

☐ NO SCAN — SURFACE — BEAM DIRECTION

☐ LIMITED SCAN — ☐ 1 ☐ 2 — ☐ 1 ☐ 2 ☐ cw ☐ ccw

FROM L ____ to L ____ — INCHES FROM W0 ____ to ____

ANGLE: ☐ 0 ☐ 45 ☐ 60 other ____ FROM ____ DEG to ____ DEG

☐ NO SCAN — SURFACE — BEAM DIRECTION

☐ LIMITED SCAN — ☐ 1 ☐ 2 — ☐ 1 ☐ 2 ☐ cw ☐ ccw

FROM L ____ to L ____ — INCHES FROM W0 ____ to ____

ANGLE: ☐ 0 ☐ 45 ☐ 60 other ____ FROM ____ DEG to ____ DEG

7 1/2" at 4 support leg

@ 45°, 135°, 225° and 315°

% of weld not examined

= 7.5" X 4 = 30"

Total weld length = 283"

% examined =(283-30) / 283x100

= 89.4%

Sketch(s) attached

☐ yes ☒ No

Prepared By: Russel Jones Level: III Date: 10-16-2007 Sheet 3 of 3

Reviewed By: III Date: 10/22/07 Authorized Inspector: Date: 10-23-07

UT Vessel Examination

Duke Energy

Site/Unit:	Catawba / 2	Procedure:	NDE-3630	Outage No.:	C2-15
Summary No.:	C2.C1.30.0008	Procedure Rev.:	1	Report No.:	UT-07-711
Workscope:	ISI	Work Order No.:	01744510	Page:	1 of 8

Code: 1998/2000A Cat./Item: C-A/C1.30 Location:

Drawing No.: CN-ISIN3-2563-1.0 Description: Tubesheet to Shell

System ID: NS

Component ID: 2BNSHX-2B-51C Size/Length: N/A Thickness/Diameter: 0.500 / 49.500

Limitations: Yes - See Limitation Report Start Time: 0930 Finish Time: 1030

Examination Surface: Inside ☐ Outside ☑ Surface Condition: AS GROUND

Lo Location: CL of Upper Manway Wo Location: CL of Weld Couplant: ULTRAGEL II Batch No.: 06125

Temp. Tool Mfg.: D.A.S Serial No.: MCNDE32811 Surface Temp.: 83 °F

Cal. Report No.: CAL-07-693, CAL-07-694, CAL-07-695

Angle Used	0	45	45T	60	60T	70L
Scanning dB		50.4	50.4	61.5		67*

Indication(s): Yes ☑ No ☐ Scan Coverage: Upstream ☑ Downstream ☑ CW ☑ CCW ☑

Comments:

*** Scanned at + 6 Db above reference due to signal to noise ratio.**

Results: Accept ☐ Reject ☑ Info ☐

Percent Of Coverage Obtained > 90%: No - 58.4% Reviewed Previous Data: Yes

Examiner Level II-N Moss, Gary J.	Signature Gary J Moss	Date 9/13/2007	Reviewer Russel E. Sims	Signature II	Date 10-11-07
Examiner Level II-N Ransom, Greg	Signature Greg Ransom	Date 9/13/2007	Site Review N/A	Signature	Date
Other Level II-N Ellis, Ken	Signature Ken Ellis	Date 9/13/2007	ANII Review	Signature Rodney Sem	Date 10/13/07

Relief Request # 08-CN-001 - Attachment I

Ultrasonic Indication Report

Duke Energy.

Site/Unit:	Catawba / 2	Procedure:	NDE-3630	Outage No.:	C2-15
Summary No.:	C2.C1.30.0008	Procedure Rev.:	1	Report No.:	UT-07-711
Workscope:	ISI	Work Order No.:	01744510	Page:	2 of 8

Search Unit Angle: 45°Shear/70°RL °

Wo Location: Weld Centerline

Lo Location: CL Top of Manway

○ Piping Welds

○ Ferritic Vessels ≥ 2"T

◉ Other Vessel < 2"T

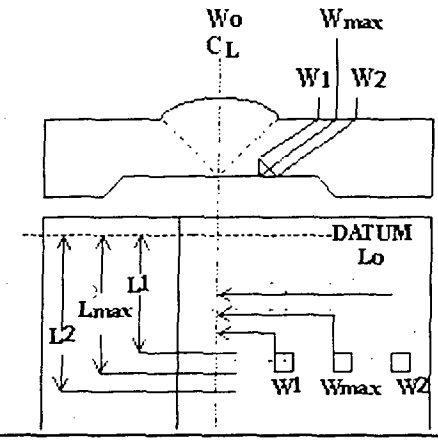

MP	Metal Path	Wmax	Distance From Wo To S.U. At Maximum Response	
RBR	Remaining Back Reflection	W1	Distance From Wo At	Of Max (Forward)
L	Distance From Datum	W2	Distance From Wo At	Of Max (Forward)

Comments:

Scan #	Indication No.	% Of DAC	W Max W	W Max MP	Forward Of Max W1	Forward Of Max MP	Backward Of Max W2	Backward Of Max MP	L1 Of Max	L Max	L2 Of Max	RBR Amp.	Remarks
1	1	40	1.1	1.8	N/A	N/A	N/A	N/A	360	0	INT.	N/A	45° Shear
2	2	125	1.4	1.9	N/A	N/A	N/A	N/A	360	0	INT.	N/A	70°RL

Examiner Moss, Gary J.	Level II-N	Signature Gary Moss	Date 9/13/2007	Reviewer Russel E. Sacks	Signature	Date 10-11-07
Examiner Ransom, Greg	Level II-N	Signature Greg Ransom	Date 9/13/2007	Site Review N/A	Signature	Date
Other Ellis, Ken	Level II-N	Signature Ken Ellis	Date 9/13/2007	ANII Review	Signature Rodney Sam	Date 10/18/07

Duke Energy.

Supplemental Report

Report No.: UT-07-711

Page: 3 of ~~4~~ 8

9/18/07

Summary No.: C2.C1.30.0008

Examiner:	Moss, Gary J.	Level:	II-N	Reviewer:	Russel E. Jones III	Date:	10.16.07
Examiner:	Ransom, Greg	Level:	II-N	Site Review:	N/A	Date:	
Other:	Ellis, Ken	Level:	II-N	ANII Review:		Date:	10/13/07

Comments: **Indications 1 & 2 are geometric reflectors from Tube Sheet holes. Indications plot into Tube Sheet area and show at different metal paths 360° around vessel.**

Sketch or Photo: Z:\UT\IDDEAL\ProfileLine2.jpg

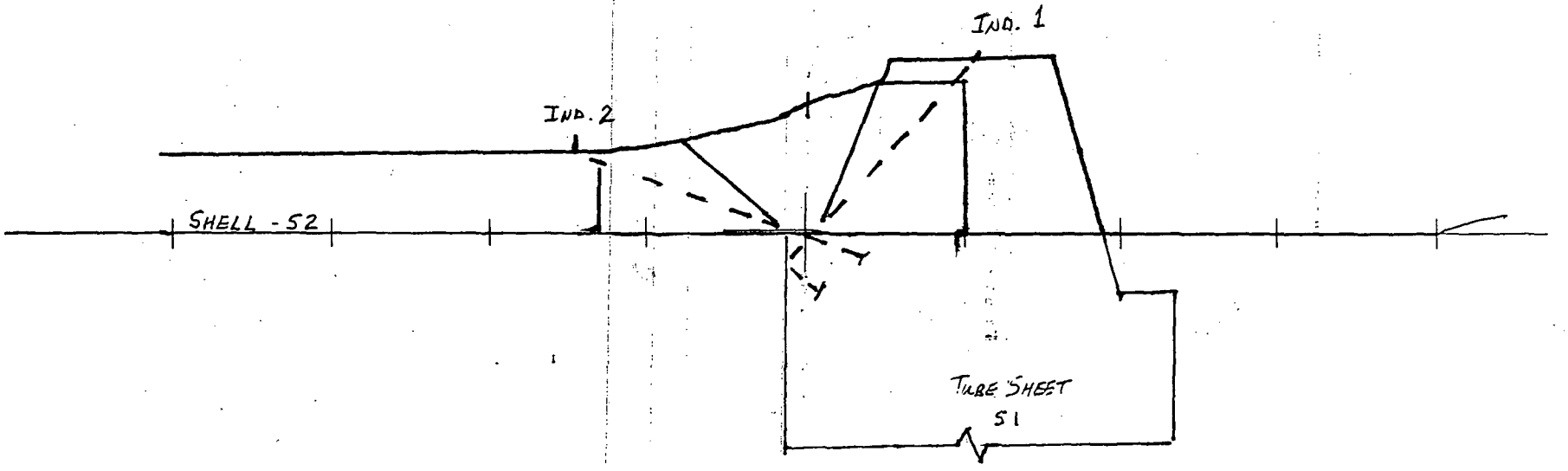

% Coverage Calculations

Item No. : C2.C1.30.0008 **Weld No. : 2BNSHX-2B-51C**

HX Ø = 49.425"

"t" = 0.500"

Weld Length = 155"

Aggregate Coverage Calculation

Axial Scans

At Nozzles	0.9 %	(4.0% of the Length x 23.2% of the Volume)
Remaining Length	48.2 %	(96% of the Length x 50.2% of the Volume)
Total	49.1 %	

Circ. Scans

At Nozzles	2.2 %	(4.0% of the Length x 54.5% of the Volume)
Remaining Length	65.4 %	(96% of the Length x 68.1% of the Volume)
Total	67.6	

Total = 116.7 ÷ 2 = 58.4% Aggregate Coverage

Inspector / Date: III 9/18/07 **Page** 4 **of** 8

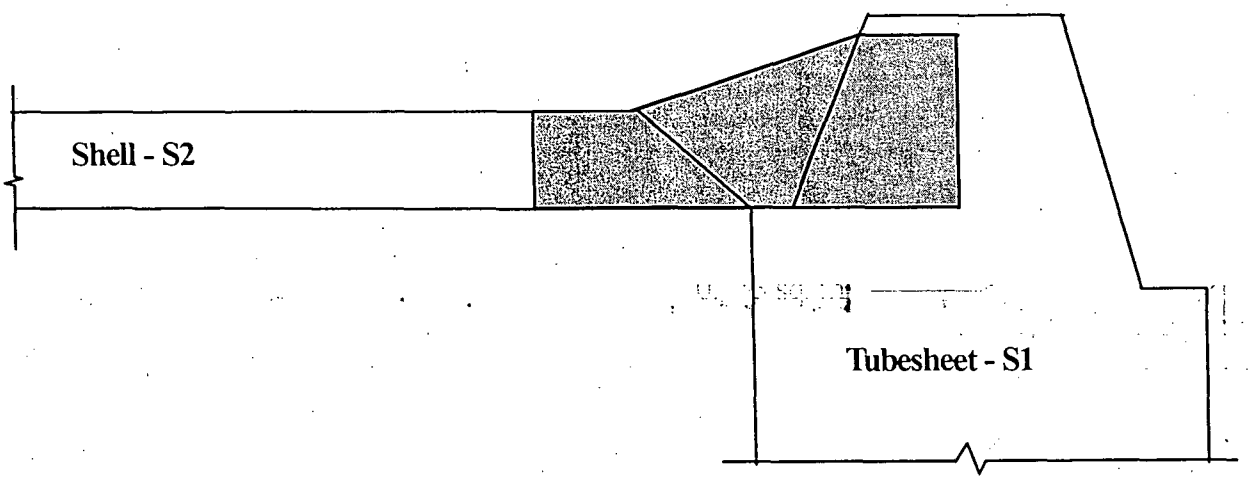

Scale: 1" = 1"

Total Exam Area = 1.52 sq. in.

Inspector / Date: III 9/13/07

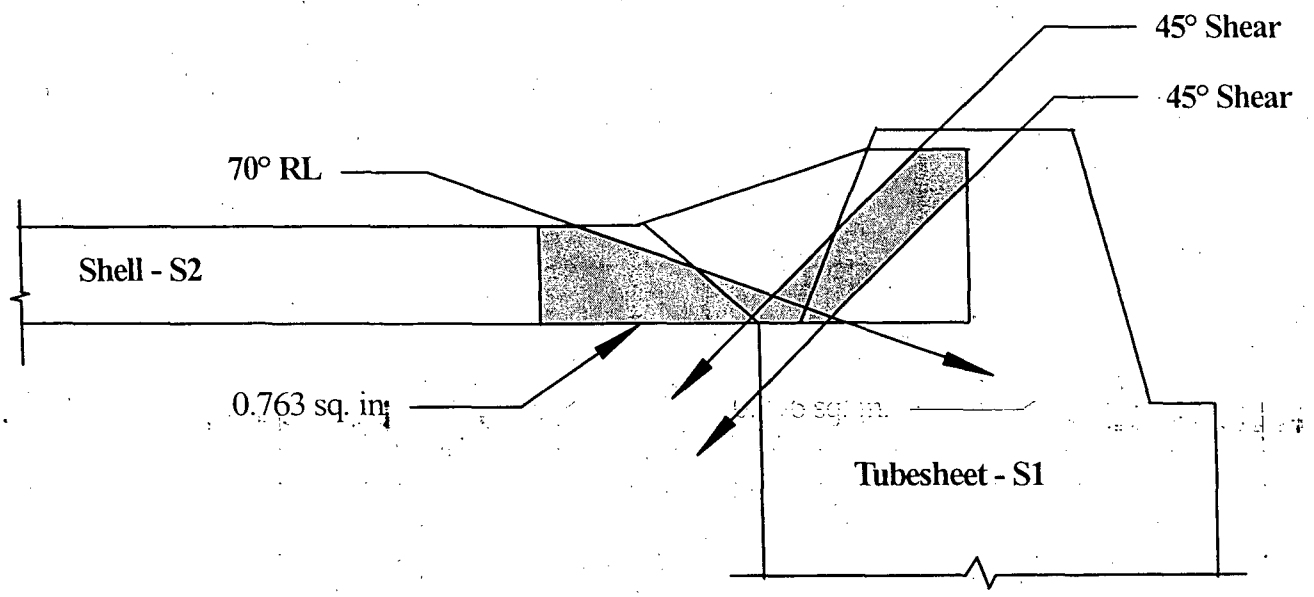

Scale: 1" = 1"

Total area examined in the axial direction with a combination of 45° shear and 70° RL transducers = 0.763 / 1.52 x 100 = 50.2%

Inspector / Date: 9/13/07

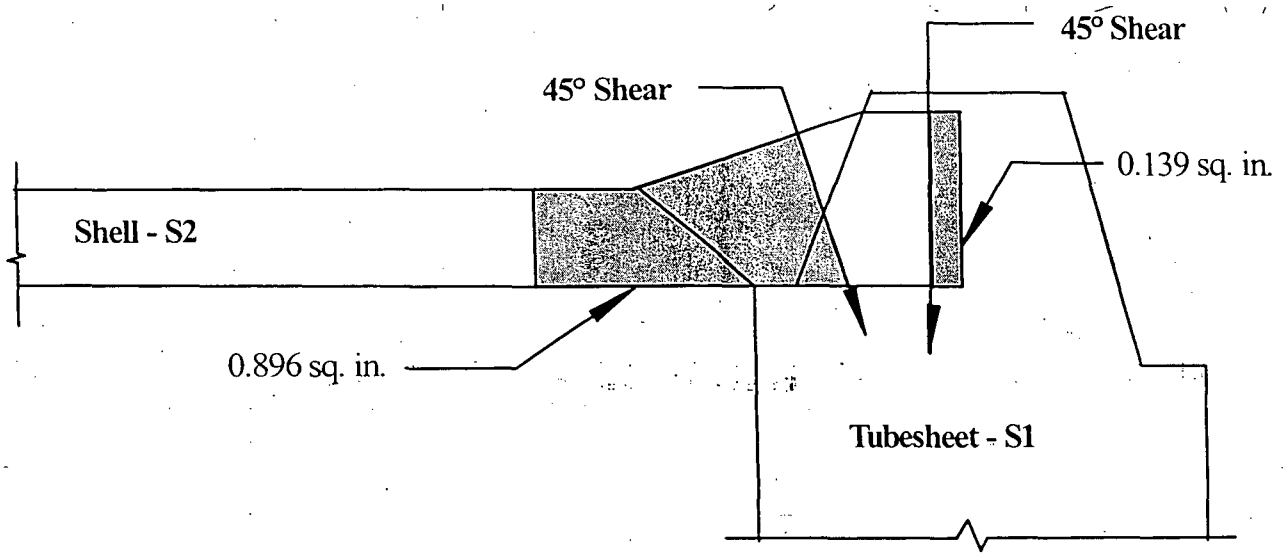

Scale: 1" = 1"

Total area examined in the circ. direction with a 45° shear transducer
= 1.035 / 1.52 x 100 = 68.1%

Inspector / Date: III 9/18/07

Limitation at Nozzle

Limmited on the Surface 2 side of the weld due to nozzle configuration. Wo = 0.5" from the weld toe, Lo = 0 - 5.7" to 0 - 11.9".for a length of 6.2".% of weld length @ nozzle = 6.2 / 155 x 100 = 4.0%.

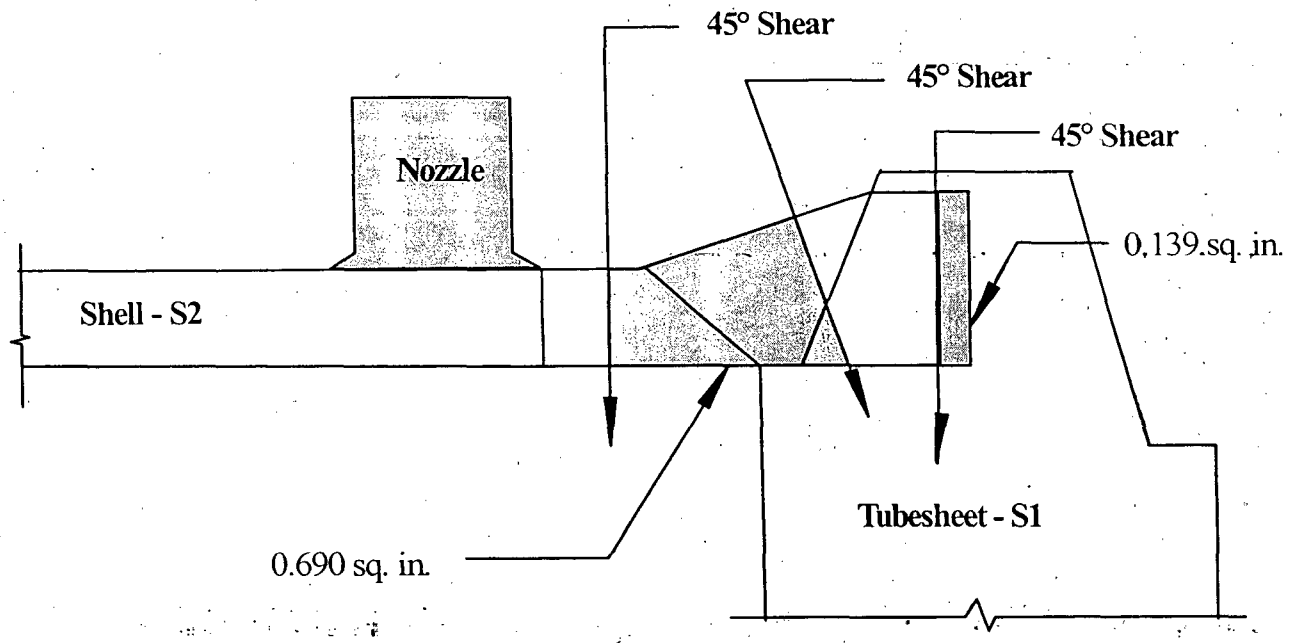

Total area examined in the circ. direction with a 45° shear transducer
= 0.829 / 1.52 x 100 = 54.5%

Circ. Scans

Scale: 1" = 1"

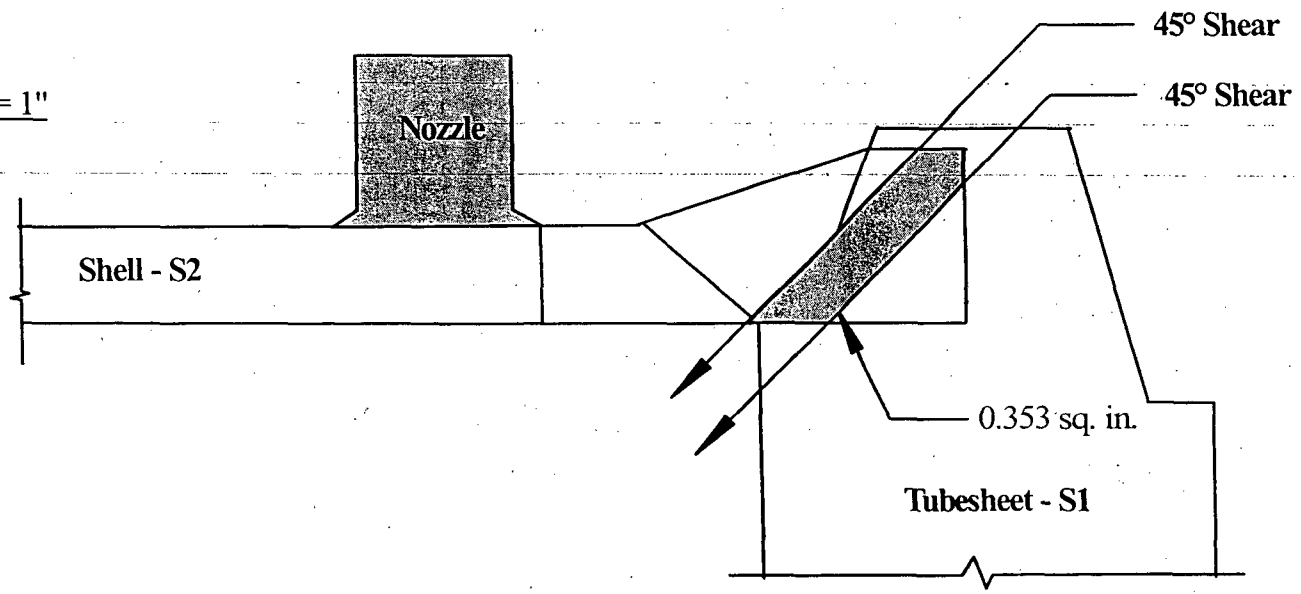

Total area examined in theaxial. direction with a 45° shear transducer
= 0.353 / 1.52 x 100 = 23.2%

Axial. Scans

Inspector / Date: 9/13/07

UT Vessel Examination

Duke Energy

Site/Unit:	Catawba / 2	Procedure:	NDE-3630	Outage No.:	C2-15
Summary No.:	C2.C1.30.0009	Procedure Rev.:	1	Report No.:	UT-07-709
Workscope:	ISI	Work Order No.:	01744510	Page:	1 of 10

Code: 1998/2000A Cat./Item: C-A/C1.30 Location:

Drawing No.: CN-ISIN3-2563-1.0 Description: Tubsheet to Shell

System ID: NS

Component ID: 2BNSHX-2A-50 Size/Length: N/A Thickness/Diameter: 0.625 / 49.675

Limitations: Yes - See Attached Limitation Report Start Time: 1140 Finish Time: 1225

Examination Surface: Inside ☐ Outside ☑ Surface Condition: AS GROUND

Lo Location: C/L of Manway Wo Location: Centerline of Flywheel Couplant: ULTRAGEL II Batch No.: 06125

Temp. Tool Mfg.: D.A.S Serial No.: MCNDE32811 Surface Temp.: 83 °F

Cal. Report No.: CAL-07-688, CAL-07-689, CAL-07-692

Angle Used	0	45	45T	60	60T	70RL
Scanning dB			43.6	60		70.7*

Indication(s): Yes ☑ No ☐ Scan Coverage: Upstream ☐ Downstream ☑ CW ☑ CCW ☑

Comments:

* 70°RL scanned at +6 dB to obtain 2:1 signal to noise ratio.

Results: Accept ☐ Reject ☑ Info ☐ Additional Inspector Dave Tucker

Percent Of Coverage Obtained > 90%: No - 38.6% Reviewed Previous Data: Yes

Examiner Level III-N Eaton, Jay A.	Signature	Date 9/7/2007	Reviewer Russel E. Sones	Signature	Date 10-11-07
Examiner Level II-N Moss, Gary J.	Signature	Date 9/7/2007	Site Review N/A	Signature	Date
Other Level II-N Ransom, Greg	Signature	Date 9/7/2007	ANII Review	Signature	Date 10/12/07

Relief Request # 08-CN-001 Attachment K

Ultrasonic Indication Report

Duke Energy.

Site/Unit:	Catawba / 2	Procedure:	NDE-3630	Outage No.:	C2-15
Summary No.:	C2.C1.30.0009	Procedure Rev.:	1	Report No.:	UT-07-709
Workscope:	ISI	Work Order No.:	01744510	Page:	2 of 10

Search Unit Angle: 45 & 60 Shear °

Wo Location: Weld Centerline

Lo Location: C/L of Manway

○ Piping Welds

○ Ferritic Vessels ≥ 2"T

◉ Other Vessel < 2"T

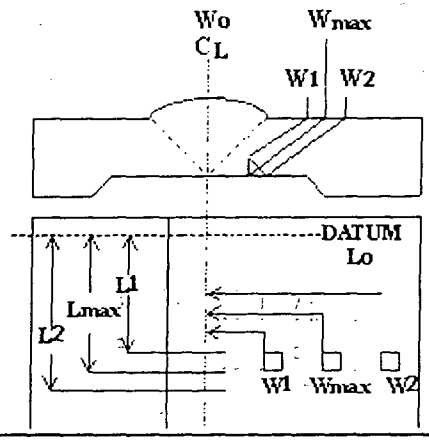

MP	Metal Path	Wmax	Distance From Wo To S.U. At Maximum Response
RBR	Remaining Back Reflection	W1	Distance From Wo At Of Max (Forward)
L	Distance From Datum	W2	Distance From Wo At Of Max (Forward)

Comments:

Scan #	Indication No.	% Of DAC	W Max W	W Max MP	Forward Of Max W1	Forward Of Max MP	Backward Of Max W2	Backward Of Max MP	L1 Of Max	L Max	L2 Of Max	RBR Amp.	Remarks
S1	1-60	40	0.85	1.08	N/A	N/A	N/A	N/A	360	39.0"	INT	N/A	
S1	2-60	60	1.1	1.38	N/A	N/A	N/A	N/A	360	40.0"	INT	N/A	
S3	3-45	120	79.6	1.0	N/A	N/A	N/A	N/A	1.0	CL	1.0	N/A	
S4	4-45	120	80.3	1.0	N/A	N/A	N/A	N/A	1.0	CL	1.0	N/A	
S3	5-45	120	0.5	.947	N/A	N/A	N/A	N/A	1.0	CL	1.0	N/A	
S4	6--45	120	1.0	.928	N/A	N/A	N/A	N/A	1.0	CL	1.0	N/A	

Examiner Level III-N Eaton, Jay A.	Signature	Date 9/7/2007	Reviewer Russel E. Jones III
Examiner Level II-N Moss, Gary J.	Signature Gary Moss	Date 9/7/2007	Site Review N/A
Other Level II-N Ransom, Greg	Signature Greg Ransom	Date 9/7/2007	ANII Review

Signature	Date	
	10-11-07	
Signature	Date	
Signature Rodney Sam	Date 10/12/07	

Supplemental Report

Report No.: UT-07-709

Summary No.:	C2.C1.30.0009						
Examiner:	Eaton, Jay A.	Level:	III-N	Reviewer:	Russel E. Dree III	Date:	10-11-07
Examiner:	Moss, Gary J.	Level:	II-N	Site Review:	N/A	Date:	
Other:	Ransom, Greg	Level:	II-N	ANII Review:	Rodney	Date:	10/12/07

Comments: **Ind. 1 & 2: Geometrical reflectors from weld root ID configuration. Signals would not hold up to skew. Plotting of indications support this determination.**

Sketch or Photo: Z:\UT\DDEAL\ProfileLine2.jpg

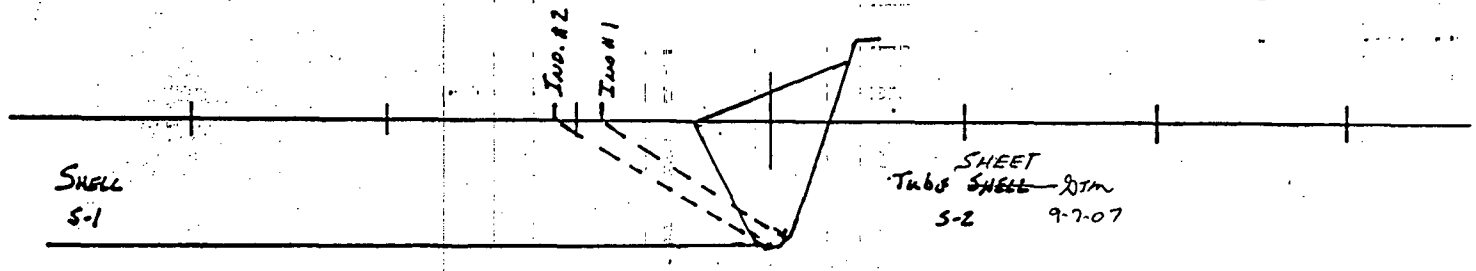

Duke Energy.

Supplemental Report

Report No.: UT-07-709

Summary No.:	C2.C1.30.0009						
Examiner:	Eaton, Jay A.	Level:	III-N	Reviewer:	Ronald E. Jones III	Date:	10-11-07
Examiner:	Moss, Gary J.	Level:	II-N	Site Review:	N/A	Date:	
Other:	Ransom, Greg	Level:	II-N	ANII Review:	Rodney Sem	Date:	10/12/07

Comments: **Indications 3, 4, 5 and 6 are ID geometric reflectors from baffle plates inside the heater.**

Sketch or Photo: Z:\UT\IDDEAL\ProfileLine2.jpg

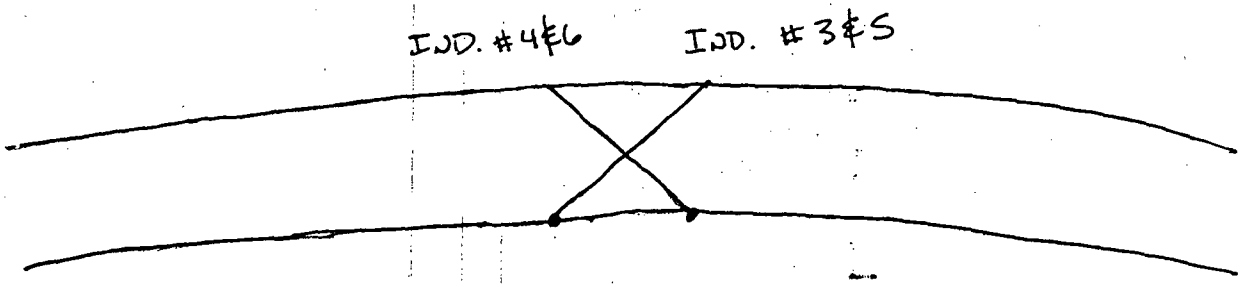

% Coverage Calculations

Item No. : C2.C1.30.0009 **Weld No. : 2BNSHX-2A-50**

HX Ø = **49.675"**

"t" = **0.625"**

Weld Length = **156"**

Aggregate Coverage Calculation

Axial Scans

At 4 - Support Lugs	0 %	(44.9% of the Length x 0% of the Volume)
At 2 - Nozzles	0 %	(7.1% of the Length x 0% of the Volume)
Remaining Length	20.6 %	(48% of the Length x 42.9% of the Volume)
Total	20.6 %	

Circ. Scans

At 4 - Support Lugs	22.9 %	(44.9% of the Length x 51.0% of the Volume)
At 2 - Nozzles	1.7 %	(7.1% of the Length x 23.8% of the Volume)
Remaining Length	32.0 %	(48% of the Length x 66.7% of the Volume)
Total	56.6	

Total = 77.2 ÷ 2 = 38.6% Aggregate Coverage

Inspector / Date: JII 9/7/07 **Page** 5 **of** 10

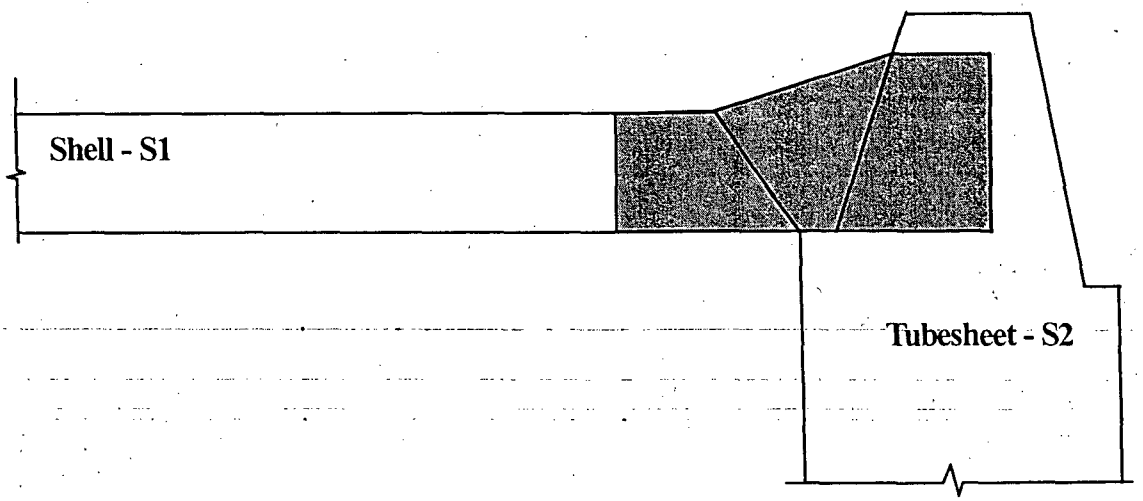

Scale: 1" = 1"

Total Exam Area = 1.47 sq. in.

Inspector / Date: III 9/7/07

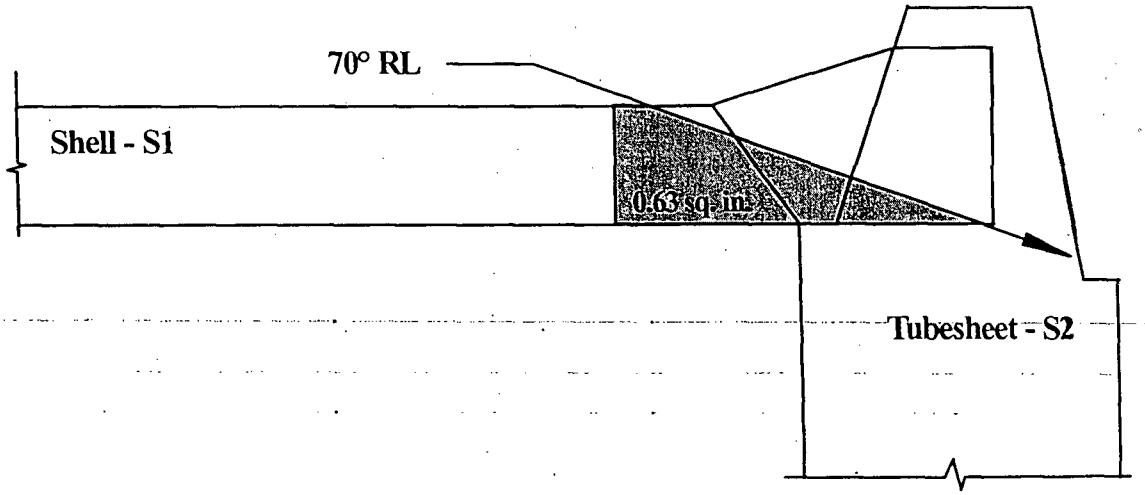

Scale: 1" = 1"

Total area examined in the axial direction with a combination of 60° shear and 70° RL transducers = 0.63/1.47 x 100 = 42.9%

Inspector / Date: 9/7/07

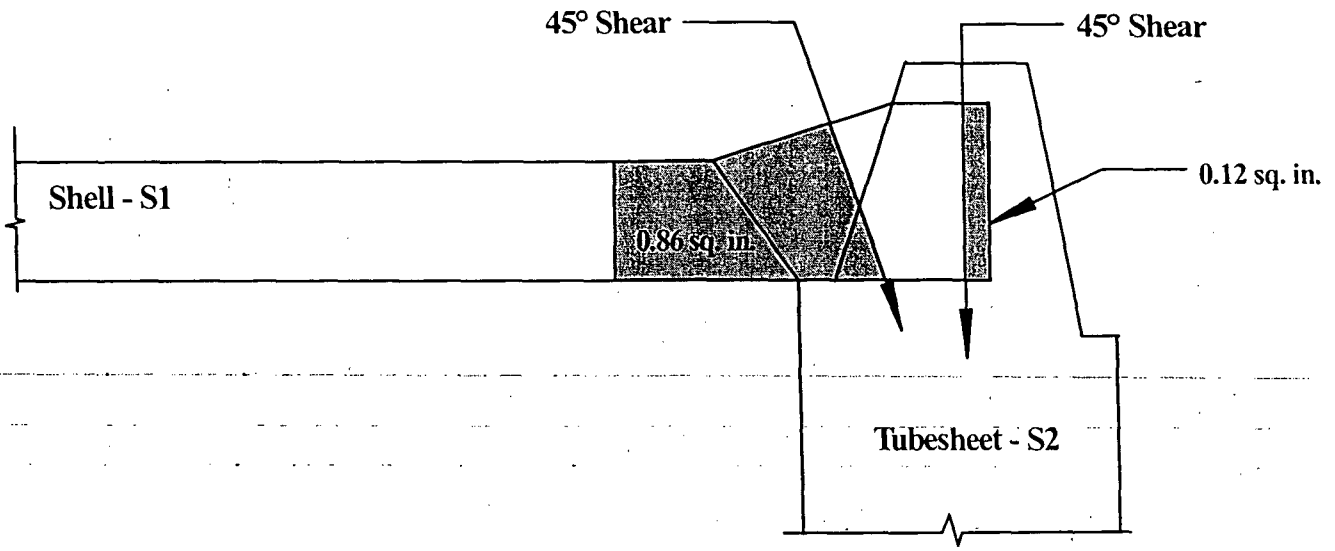

Scale: 1" = 1"

Total area examined in the circ. direction with a 45° shear transducer
= 0.98 / 1.47 x 100 = 66.7%

Inspector / Date: III 9/7/07

Scale: 1" = 1"

Limitation at Nozzles (typical 2 places)

Limited on the Surface 1 side of the weld at 2 places due to nozzles.
The nozzles are located at 0 + 70.5" to 0 + 76.0" and 0 + 81.0" to 0 + 86.5".
for a total of 11". % of length limited at nozzles = 11 / 156 x 100 = 7.1%.

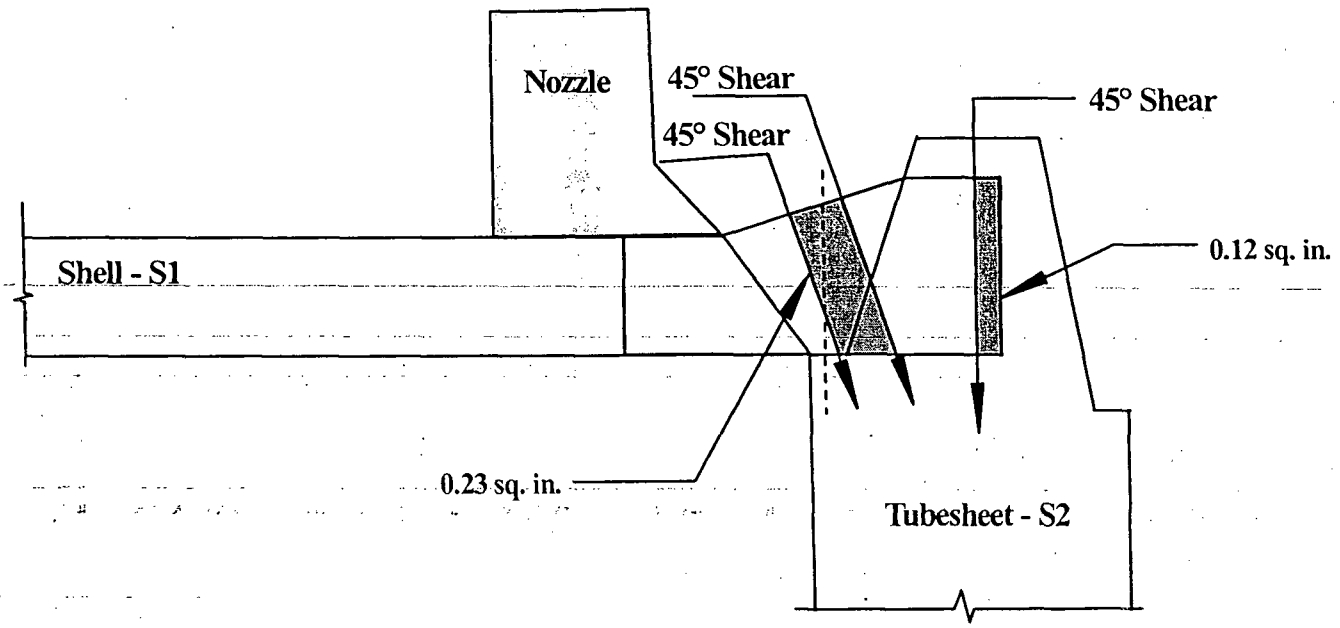

Total area examined in the circ. direction with a 45° shear transducer
= (0.23 + 0.12) / 1.47 x 100 = 23.8%

Total area examined in the Axial. direction = 0%.

Inspector / Date: III 9/7/07

Scale: 1" = 1"

Limitation at Support Lugs (typical 4 places)

Limited on the Surface 1 side of the weld at 4 places due to Support Lugs. The Lugs are located at 45°, 135°, 225° and 315° limited 17.5" each x 4 Lugs for a total of 70". % of length at Lugs = 70 / 156 x 100 = 44.9%.

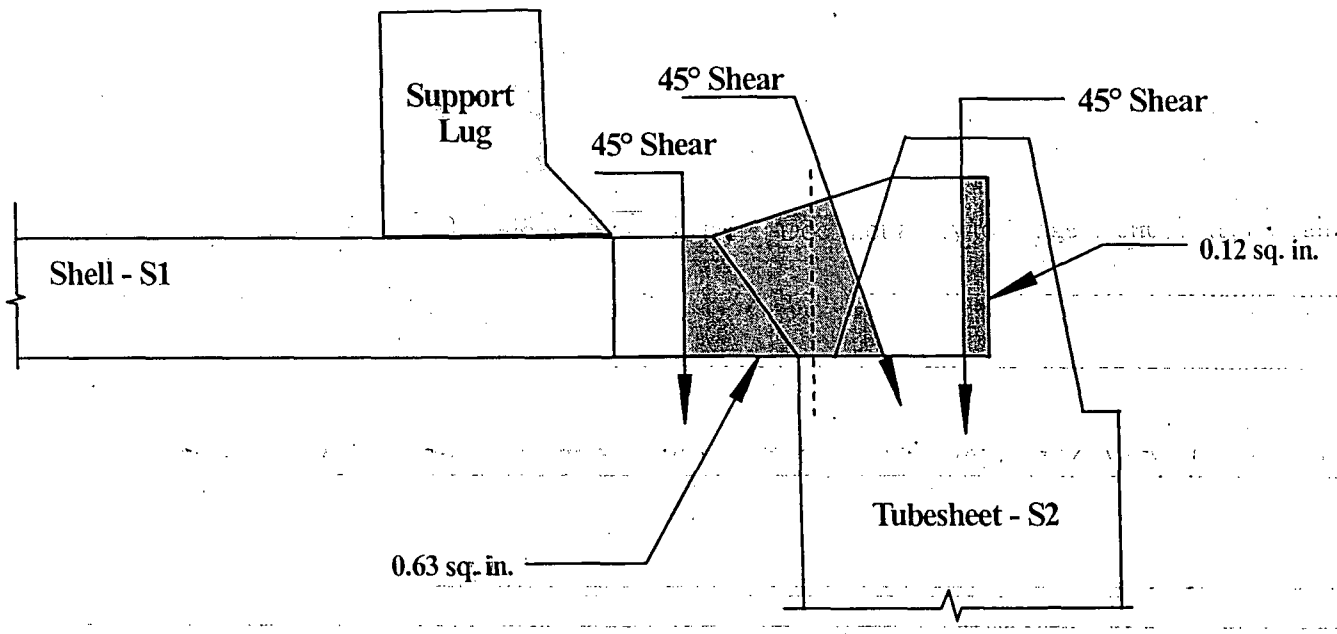

Total area examined in the circ. direction with a 45° shear transducer = (0.63 + 0.12) / 1.47 x 100 = 51.0%

Total area examined in the Axial. direction = 0%.

Inspector / Date: III 9/7/07

UT Pipe Weld Examination

Duke Energy

Site/Unit:	Catawba / 2	Procedure:	PDI-UT-2	Outage No.:	C2-15
Summary No.:	C2.C5.11.0071	Procedure Rev.:	C	Report No.:	UT-07-698
Workscope:	ISI	Work Order No.:	01744120	Page:	1 of 2

Code: 1998/2000A Cat./Item: C-F-1/C5.11 Location:

Drawing No.: CN-2ND-5 Description: Flange to Pipe

System ID: ND

Component ID: 2ND5-5 Size/Length: N/A Thickness/Diameter: 0.438 / 14.000

Limitations: Yes - See Attached Limitation Report Start Time: 0956 Finish Time: 1118

Examination Surface: Inside ☐ Outside ☑ Surface Condition: AS GROUND

Lo Location: 9.1.1.1 Wo Location: Centerline of Weld Couplant: ULTRAGEL II Batch No.: 06125

Temp. Tool Mfg.: D.A.S Serial No.: MCNDE32823 Surface Temp.: 94 °F

Cal. Report No.: CAL-07-680, CAL-07-681, CAL-07-682

Angle Used	0	45	45T	60	70	
Scanning dB		42	42	65	68	

Indication(s): Yes ☐ No ☑ Scan Coverage: Upstream ☐ Downstream ☑ CW ☑ CCW ☑

Comments:

Results: Accept ☐ Reject ☑ Info ☐

Percent Of Coverage Obtained > 90%: No - 53.0% Reviewed Previous Data: Yes

Examiner Jones, Russel E.	Level III-N	Signature	Date 8/31/2007	Reviewer		Signature III	Date 9/20/07
Examiner N/A	Level N/A	Signature	Date 8/31/2007	Site Review N/A		Signature	Date
Other N/A	Level N/A	Signature	Date 8/31/2007	ANII Review		Signature	Date 9/20/07

Relief Request # D8-CN-001 Attachment L

Item No. C2.C5.11.0071 Weld No. 2ND5-5

Scale : 1" = 1"

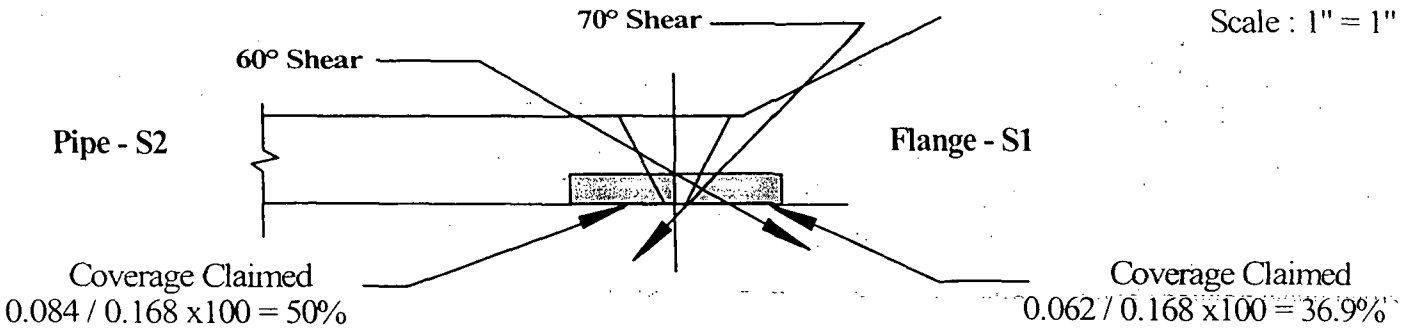

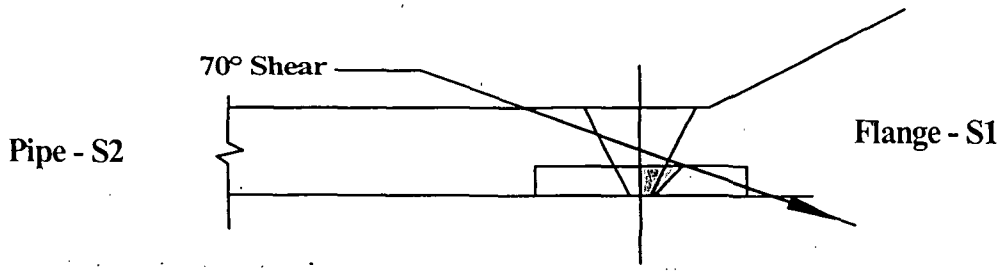

Supplemental coverage only with 70° Shear Wave in area not examined with Axial scans shown above. See Note:

Note: 70° shear scan from Surface 2 not included in percentage coverage due to requirements of 10CFR50.55a(b)(2)(xv)(A)(1). Best effort scan with 70 shear obtained 13.1% coverage.

Axial Scans

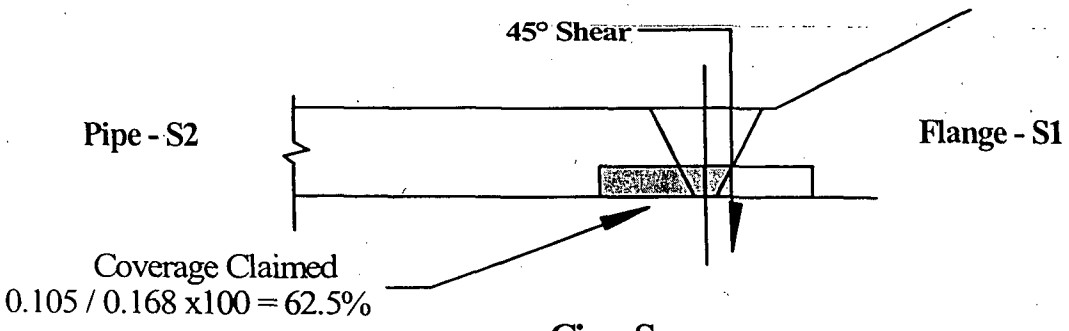

Circ. Scans

Aggregate Coverage = (50 + 36.9 + 62.5 + 62.5) / 4 = 53.0%

Inspector / Date: 8/31/07

UT Pipe Weld Examination

Duke Energy.

Site/Unit:	Catawba / 2	Procedure:	PDI-UT-2	Outage No.:	C2-15
Summary No.:	C2.C5.11.0074	Procedure Rev.:	C	Report No.:	UT-07-699
Workscope:	ISI	Work Order No.:	01744120	Page:	1 of 2

Code: 1998/2000A Cat./Item: C-F-1/C5.11 Location:

Drawing No.: CN-2ND-5 Description: Pipe to Flange

System ID: ND

Component ID: 2ND5-8 Size/Length: N/A Thickness/Diameter: 0.438 / 14.000

Limitations: Yes - See Attached Limitation Report Start Time: 0956 Finish Time: 1118

Examination Surface: Inside ☐ Outside ☑ Surface Condition: AS GROUND

Lo Location: 9.1.1.2 Wo Location: Centerline of Weld Couplant: ULTRAGEL II Batch No.: 06125

Temp. Tool Mfg.: D.A.S Serial No.: MCNDE32823 Surface Temp.: 94 °F

Cal. Report No.: CAL-07-680, CAL-07-681, CAL-07-682

Angle Used	0	45	45T	60	70	
Scanning dB		42	42	65	68	

Indication(s): Yes ☐ No ☑ Scan Coverage: Upstream ☑ Downstream ☐ CW ☑ CCW ☑

Comments:

Results: Accept ☐ Reject ☑ Info ☐

Percent Of Coverage Obtained > 90%: No - 53.0% Reviewed Previous Data: Yes

Examiner Jones, Russel E.	Level III-N	Signature	Date 8/31/2007	Reviewer		Signature III	Date 9/20/07
Examiner N/A	Level N/A	Signature	Date 8/31/2007	Site Review N/A		Signature	Date
Other N/A	Level N/A	Signature	Date 8/31/2007	ANII Review		Signature	Date 9/20/07

Relief Request # 08-CN-001 Attachment M

Item No. C2.C5.11.0074 Weld No. 2ND5-8

Scale : 1" = 1"

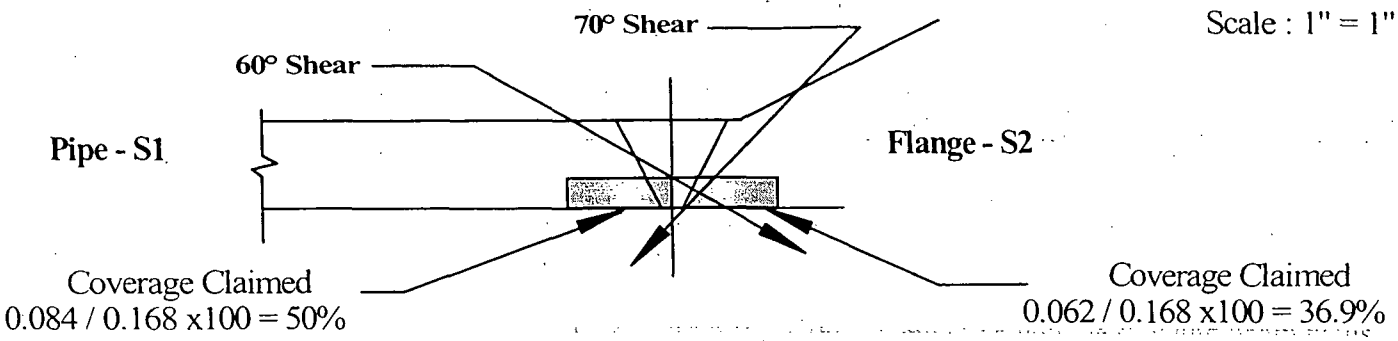

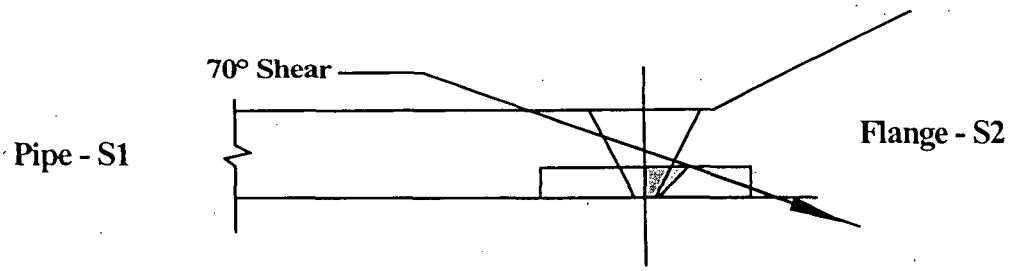

Supplemental coverage only with 70° Shear Wave in area not examined with Axial scans shown above. See Note:

Note: 70° shear scan from Surface 1 not included in percentage coverage due to requirements of 10CFR50.55a(b)(2)(xv)(A)(1). Best effort scan with 70 shear obtained 13.1% coverage.

Axial Scans

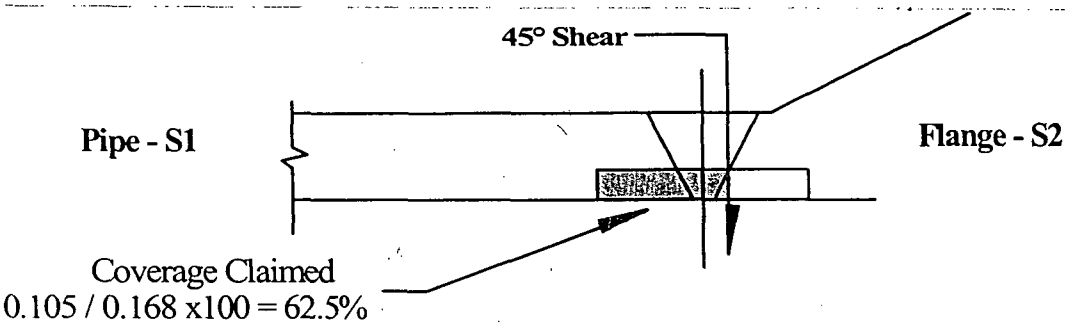

Circ. Scans

Aggregate Coverage = (50 + 36.9 + 62.5 + 62.5) / 4 = 53.0%

Inspector / Date: VII 8/31/07

Duke Energy

UT Pipe Weld Examination

Site/Unit:	Catawba / 2	Procedure:	PDI-UT-2	Outage No.:	C2-15
Summary No.:	C2.C5.11.0146	Procedure Rev.:	C	Report No.:	UT-07-712
Workscope:	ISI	Work Order No.:	01744440	Page:	1 of 2

Code: 1998/2000A Cat./Item: C-F-1/C5.11 Location:

Drawing No.: CN-2NS-32 Description: Valve 2NS001B to Pipe

System ID: NS

Component ID: 2NS32-1 Size/Length: N/A Thickness/Diameter: 0.375 / 12.000

Limitations: Yes - See Attached Limitation Report Start Time: 1325 Finish Time: 1430

Examination Surface: Inside ☐ Outside ☑ Surface Condition: GROUND

Lo Location: 9.1.1.1 Wo Location: Centerline of Weld Couplant: ULTRAGEL II Batch No.: 06125

Temp. Tool Mfg.: D.A.S Serial No.: MCNDE32823 Surface Temp.: 90 °F

Cal. Report No.: CAL-07-696, CAL-07-697, CAL-07-698, CAL-07-699, CAL-07-700

Angle Used	0	45	45T	60	70	
Scanning dB		32.6	32.6	42.6	67.1	

Indication(s): Yes ☐ No ☑ Scan Coverage: Upstream ☑ Downstream ☑ CW ☑ CCW ☑

Comments:

Scanning dB from valve side are as follows: 45° Axial = 37.6 dB, 60° Axial = 52.6 dB

Results: Accept ☐ Reject ☑ Info ☐

Percent Of Coverage Obtained > 90%: No 41.1 % Reviewed Previous Data: Yes

Examiner Tucker, David K.	Level II-N	Signature	Date 9/6/2007	Reviewer		Signature	Date 9/27/07
Examiner Ellis, Ken	Level II-N	Signature	Date 9/6/2007	Site Review N/A		Signature	Date
Other N/A	Level N/A	Signature	Date 9/6/2007	ANII Review		Signature	Date 9/30/07

Relief Request # 08-CN-001 Attachment N

Total area of interest = 0.195 sq. in.

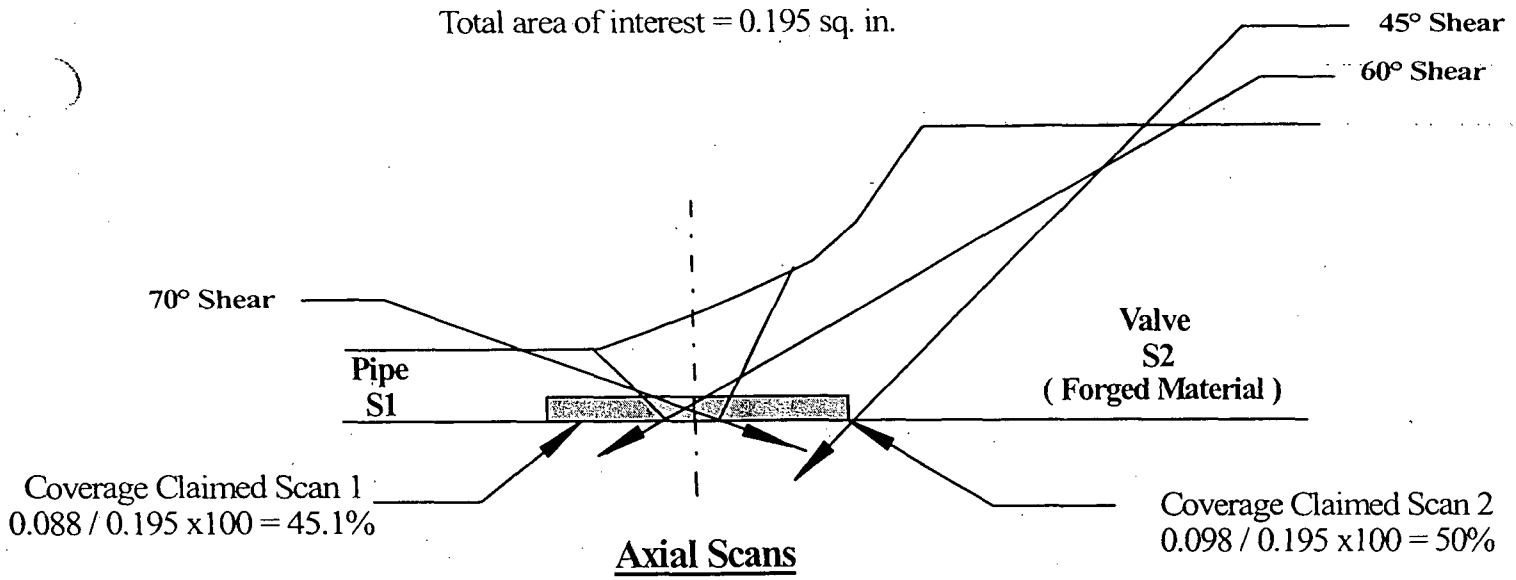

Axial Scans

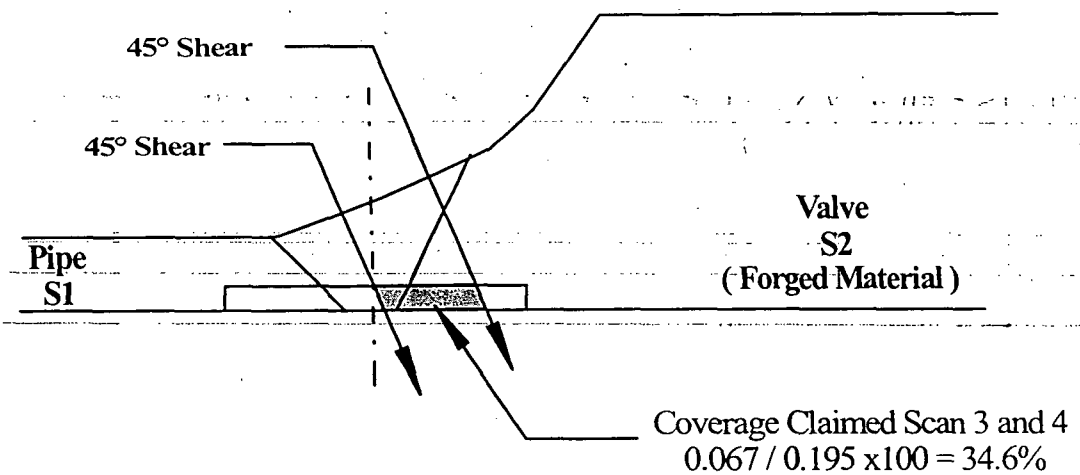

Circ. Scans

Aggregate Coverage
= (S1+S2+S3+S4) / 4 x 100
= (45.1 + 50 + 34.6 + 34.6) / 4 x 100
= 41.1%

Scale : 1" = 1"

Inspector / Date : 6 Sep 07 Page 2 of 2

UT Pipe Weld Examination

Duke Energy.

Site/Unit:	Catawba / 2	Procedure:	NDE-600	Outage No.:	C2-15
Summary No.:	C2.C5.21.0053	Procedure Rev.:	17	Report No.:	UT-07-673
Workscope:	ISI	Work Order No.:	01744536	Page:	1 of 4

Code: 1998/2000A Cat./Item: C-F-1/C5.21 Location:

Drawing No.: CN-2NV-14 Description: Pipe to Tee

System ID: NV

Component ID: 2NV14-2 Size/Length: N/A Thickness/Diameter: 0.531 / 4.000

Limitations: Yes - See Attached Limitation Report Start Time: 0915 Finish Time: 1130

Examination Surface: Inside ☐ Outside ☑ Surface Condition: AS GROUND

Lo Location: 9.1.1.1 Wo Location: Weld Centerline Couplant: ULTRAGEL II Batch No.: 06125

Temp. Tool Mfg.: D.A.S Serial No.: MCNDE32823 Surface Temp.: 94.2 °F

Cal. Report No.: CAL-07-660, CAL-07-661, CAL-07-662

Angle Used	0	45	45T	60	60L	
Scanning dB			54.1	57.0	63.8	

Indication(s): Yes ☐ No ☑ Scan Coverage: Upstream ☑ Downstream ☑ CW ☑ CCW ☑

Comments:

Results: Accept ☐ Reject ☑ Info ☐

Percent Of Coverage Obtained > 90%: No - 86.9% Reviewed Previous Data: Yes

Examiner Level II-N Moss, Gary J.	Signature Gary J. Moss	Date 8/23/2007	Reviewer N.E. Jensen	Signature	Date 8/30/07
Examiner Level II-N Tucker, David K.	Signature David K. Tucker	Date 8/23/2007	Site Review N/A	Signature	Date
Other Level N/A N/A	Signature	Date 8/23/2007	~~ANII Review~~	Signature	Date 9/6/07

Relief Request # 08-CN-001 Attachment D

Duke Energy.

Supplemental Report

Summary No.: C2.C5.21.0053

Examiner:	Moss, Gary J.	Level:	II-N	Reviewer:	DE Hooper	Date:	8/30/07
Examiner:	Tucker, David K.	Level:	II-N	Site Review:	N/A	Date:	
Other:	N/A	Level:	N/A	ANII Review:		Date:	9/6/07

Comments:

Sketch or Photo: Z:\UT\IDDEAL\ProfileLine2.jpg

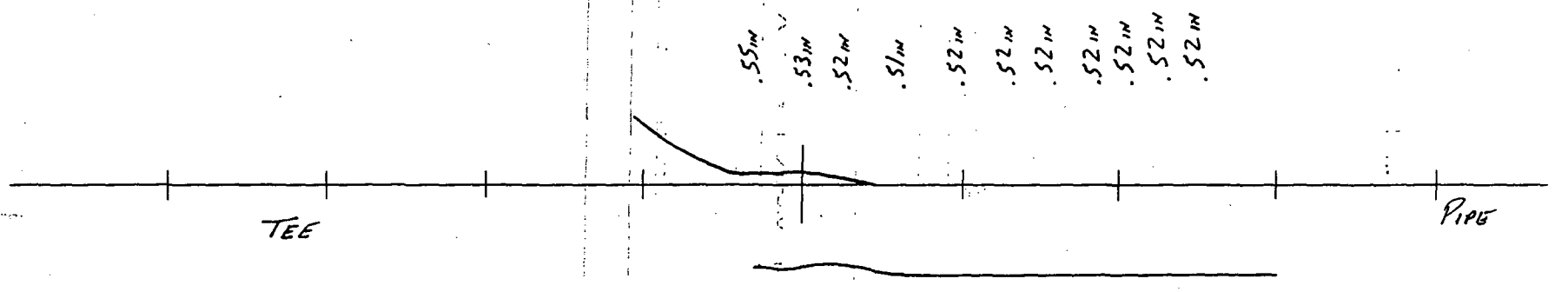

Item No. C2.C5.21.0053 Weld No. 2NV14-2

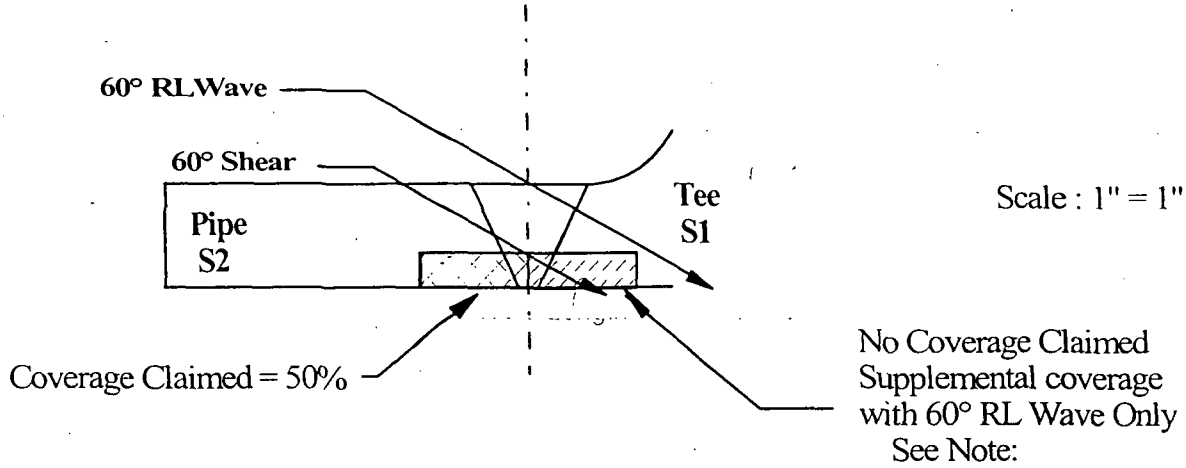

Note: 60° RL scan not included in percentage coverage due to requirements of 10CFR50.55a(b)(2)(xv)(A)(1). Best effort scan with 60° RL obtained 50% coverage in one axial direction.

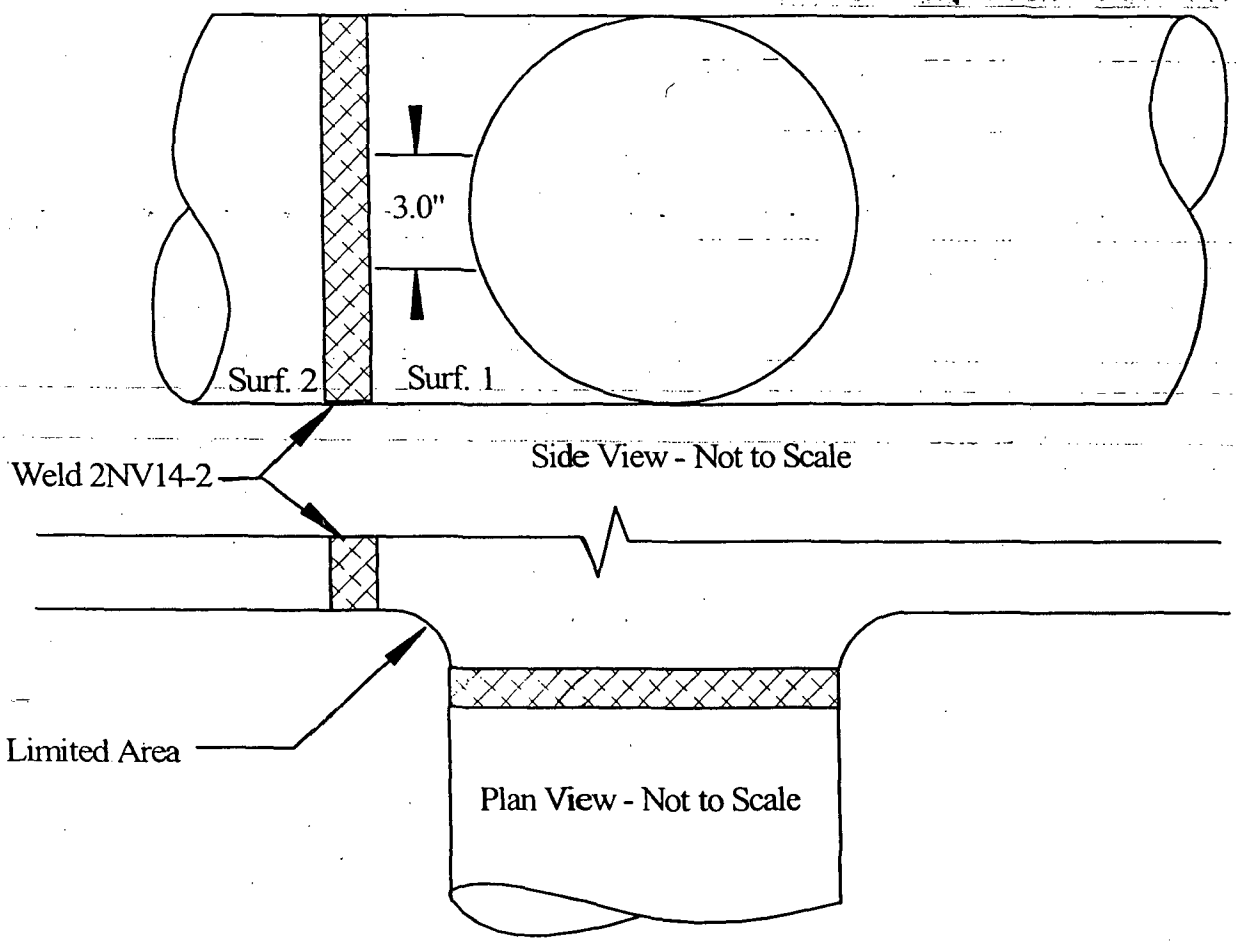

Limited 3" in throat area of Tee. From Lo + 2.1" to Lo + 5.1" on Surface 1.

Inspector / Date : _____ III 8/30/07 Page 3 of 4

% Coverage Calculations

Item No. : C2.C5.21.0053 **Weld No. : 2NV14-2**

Pipe Ø = **4.5"**

"t" = **0.531"**

Weld Length = **14.2"**

Limited scan on Surface 1 due to the throat of the tee for 3" of the weld length .

% of Length at throat of Tee = 3 / 14.2 x 100 = 21.1%.

% of Length examined 100% = 100 - 21.1 = 78.9%.

Aggregate Coverage Calculation

S1 = Tee	**78.9 %**	(78.9% of the Length x 100% of the Volume)
S1 = Tee	**0 %**	(21.1% of the Length x 0% of the Volume)
Total S1	**78.9 %**	
S2 = Pipe	**78.9 %**	(78.9% of the Length x 100% of the Volume)
S2 = Pipe	**10.6 %**	(21.1% of the Length x 50% of the Volume)
Total S2	**89.5 %**	
S3 CW= S1 & S2	**78.9 %**	(78.9% of the Length x 100% of the Volume)
S2	**10.6**	(21.1% of the Length x 50% of the Volume)
S1	**0**	(21.1% of the Length x 0% of the Volume)
	89.5 %	
S4 CCW = S1 & S2	**78.9 %**	(78.9% of the Length x 100% of the Volume)
S2	**10.6**	(21.1% of the Length x 50% of the Volume)
S1	**0**	(21.1% of the Length x 0% of the Volume)
	89.5 %	

Total = 347.4 ÷ 4 = 86.9% Aggregate Coverage

Inspector / Date: _____ III 8/30/07 **Page** 4 **of** 4

UT Pipe Weld Examination

Duke Energy.

Site/Unit:	Catawba / 2	Procedure:	NDE-600	Outage No.:	C2-15
Summary No.:	C2.C5.21.0054	Procedure Rev.:	17	Report No.:	UT-07-674
Workscope:	ISI	Work Order No.:	01744536	Page:	1 of 4

Code: 1998/2000A Cat./Item: C-F-1/C5.21 Location:

Drawing No.: CN-2NV-14 Description: Tee to 4X3 Reducer

System ID: NV

Component ID: 2NV14-3 Size/Length: N/A Thickness/Diameter: 0.531 / 4.000

Limitations: Yes - See Attached Limitation Report Start Time: 0921 Finish Time: 1125

Examination Surface: Inside ☐ Outside ☑ Surface Condition: AS GROUND

Lo Location: 9.1.1.1 Wo Location: Weld Centerline Couplant: ULTRAGEL II Batch No.: 06125

Temp. Tool Mfg.: D.A.S Serial No.: MCNDE32823 Surface Temp.: 94.2 °F

Cal. Report No.: CAL-07-660, CAL-07-661, CAL-07-662

Angle Used	0	45	45T	60	60L	
Scanning dB			54.1	57.0	63.8	

Indication(s): Yes ☐ No ☑ Scan Coverage: Upstream ☑ Downstream ☑ CW ☑ CCW ☑

Comments:

Results: Accept ☐ Reject ☑ Info ☐

Percent Of Coverage Obtained > 90%: No - 84.2% Reviewed Previous Data: Yes

Examiner Moss, Gary J.	Level II-N	Signature Gary Moss	Date 8/23/2007	Reviewer		Signature DE Jones	Date 8/30/07
Examiner Tucker, David K.	Level II-N	Signature David K Tucker	Date 8/23/2007	Site Review N/A		Signature	Date
Other N/A	Level N/A	Signature	Date 8/23/2007	ANII Review		Signature Rodney Sam	Date 9/6/07

Relief Request # 08-CN-001 Attachment P AJH 1/16/08

Duke Energy.

Supplemental Report

Summary No.: C2.C5.21.0054

Examiner:	Moss, Gary J.	Level:	II-N	Reviewer:		Date:	8/30/07
Examiner:	Tucker, David K.	Level:	II-N	Site Review:	N/A	Date:	
Other:	N/A	Level:	N/A	ANII Review:		Date:	9/6/07

Comments:

Sketch or Photo: Z:\UT\IDDEAL\ProfileLine2.jpg

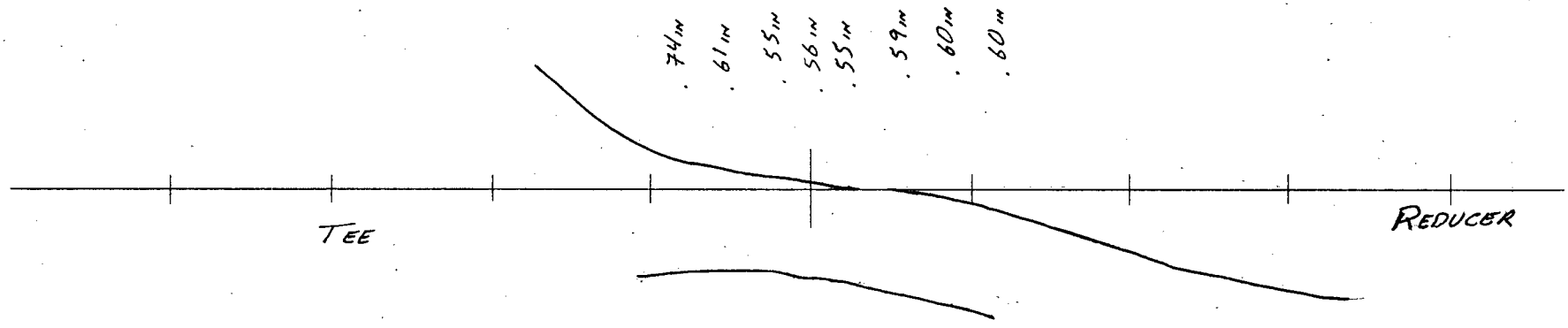

Item No. C2.C5.21.0054 **Weld No. 2NV14-3**

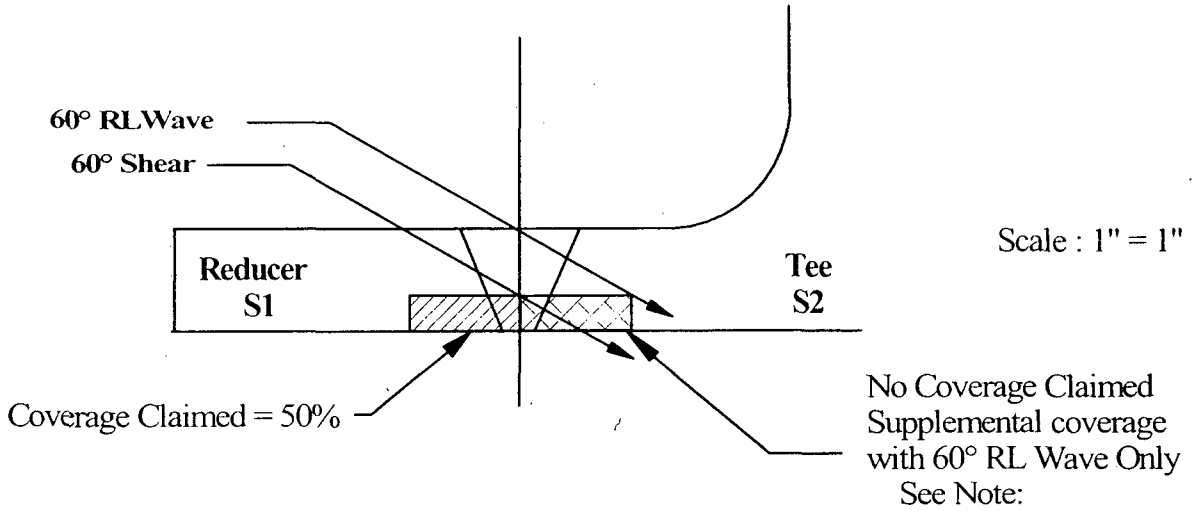

Note: 60° RL scan not included in percentage coverage due to requirements of 10CFR50.55a(b)(2)(xv)(A)(1). Best effort scan with 60° RL obtained 50% coverage in one axial direction.

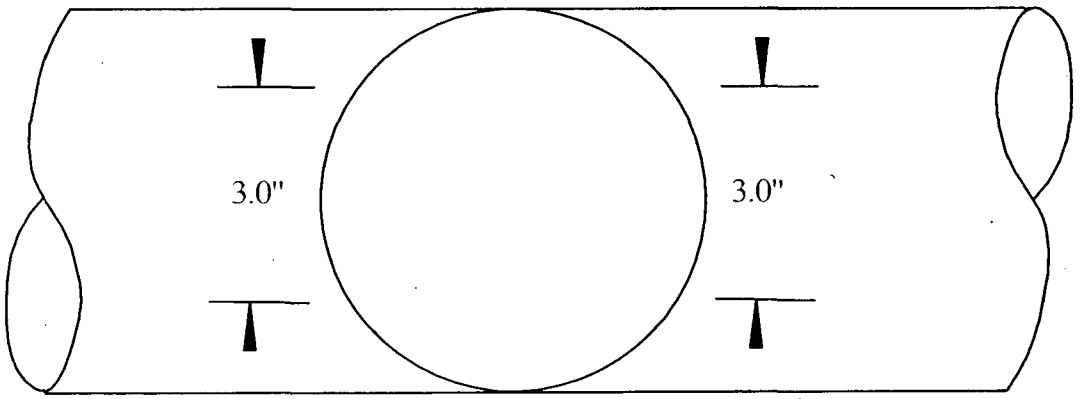

Plan View - Not to Scale

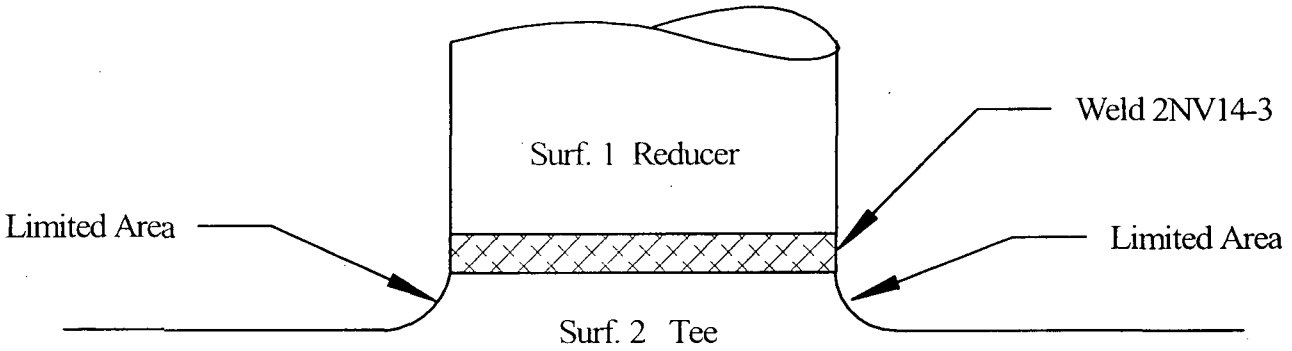

Side View - Not to Scale

Limited 3" on ea. side of Tee in throat area for a total of 6". From Lo + 2.1" to 5.1" and from Lo + 9.2" to 12.2" on Surface 2.

Inspector / Date : _____ III 8/30/07 Page 3 of 4

% Coverage Calculations

Item No. : C2.C5.21.0054 **Weld No. : 2NV14-3**

Pipe Ø = **4.5"**

"t" = **0.531"**

Weld Length = **14.2"**

Limited scan on Surface 2 due to the throat of the tee for 6" of the weld length .

% of Length at throat of Tee = 6 / 14.2 x 100 = 42.3%.

% of Length examined 100% = 100 - 42.3 = 57.7%.

Aggregate Coverage Calculation

S1 = Reducer	57.7 %	(57.7% of the Length x 100% of the Volume)
S1 = Reducer	21.2 %	(42.3% of the Length x 50% of the Volume)
Total S1	78.9 %	
S2 = Tee	57.7 %	(57.7% of the Length x 100% of the Volume)
S2 = Tee	0 %	(42.3% of the Length x 0% of the Volume)
Total S2	57.7 %	
S3 = CW	100 %	(100% of the Length x 100% of the Volume)
S4 = CCW	100 %	(100% of the Length x 100% of the Volume)

Total = 336.6 ÷ 4 = 84.2% Aggregate Coverage

Inspector / Date: III 8/30/07 **Page** 4 **of** 4

UT Pipe Weld Examination

Duke Energy.

Site/Unit:	Catawba / 2	Procedure:	NDE-600	Outage No.:	C2-15
Summary No.:	C2.C5.21.0057	Procedure Rev.:	17	Report No.:	UT-07-675
Workscope:	ISI	Work Order No.:	01744535	Page:	1 of 4

Code: 1998/2000A Cat./Item: C-F-1/C5.21 Location:

Drawing No.: CN-2NV-15 Description: Tee to Pipe

System ID: NV

Component ID: 2NV15-1 Size/Length: N/A Thickness/Diameter: 0.531 / 4.000

Limitations: Yes - See Attached Limitation Report Start Time: 0926 Finish Time: 1134

Examination Surface: Inside ☐ Outside ☑ Surface Condition: AS GROUND

Lo Location: 9.1.1.1 Wo Location: Weld Centerline Couplant: ULTRAGEL II Batch No.: 06125

Temp. Tool Mfg.: D.A.S Serial No.: MCNDE32823 Surface Temp.: 94.2 °F

Cal. Report No.: CAL-07-660, CAL-07-661, CAL-07-662

Angle Used	0	45	45T	60	60L	
Scanning dB			54.1	57.0	63.8	

Indication(s): Yes ☐ No ☑ Scan Coverage: Upstream ☑ Downstream ☑ CW ☑ CCW ☑

Comments:

Results: Accept ☐ Reject ☑ Info ☐

Percent Of Coverage Obtained > 90%: No - 86.9% Reviewed Previous Data: Yes

Examiner	Level	Signature	Date	Reviewer	Signature	Date
Moss, Gary J.	II-N	Gary Moss	8/23/2007	D E Hewen		8/30/07
Tucker, David K.	II-N	David K Tucker	8/23/2007	Site Review N/A		
N/A	N/A		8/23/2007	~~ANII Review~~		9/6/07

Relief Request #08-CN-001 Attachment 2

Duke Energy.

Supplemental Report

Report No.: UT-07-675

Summary No.: C2.C5.21.0057

Examiner:	Moss, Gary J.	Level:	II-N	Reviewer:	DE Howen	Date:	8/30/07
Examiner:	Tucker, David K.	Level:	II-N	Site Review:	N/A	Date:	
Other:	N/A	Level:	N/A	ANII Review:	Rodney Sam	Date:	9/6/07

Comments:

Sketch or Photo: Z:\UT\IDDEAL\ProfileLine2.jpg

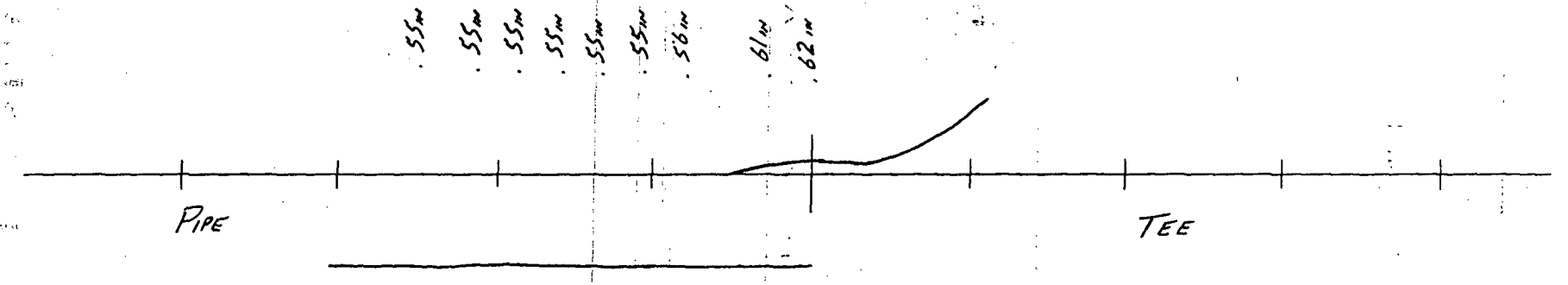

Item No. C2.C5.21.0057 Weld No. 2NV15-1

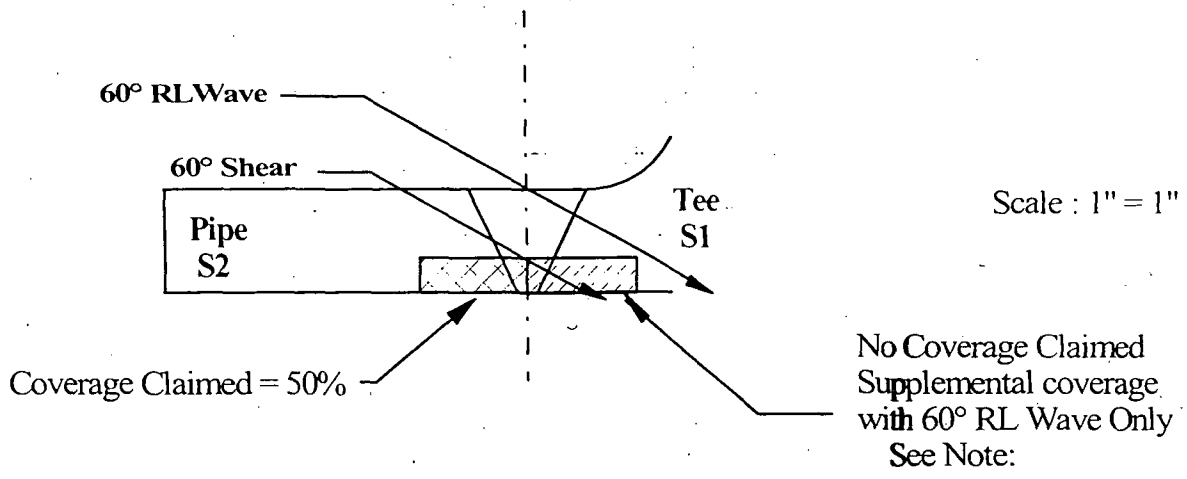

Note: 60° RL scan not included in percentage coverage due to requirements of 10CFR50.55a(b)(2)(xv)(A)(1). Best effort scan with 60° RL obtained 50% coverage in one axial direction.

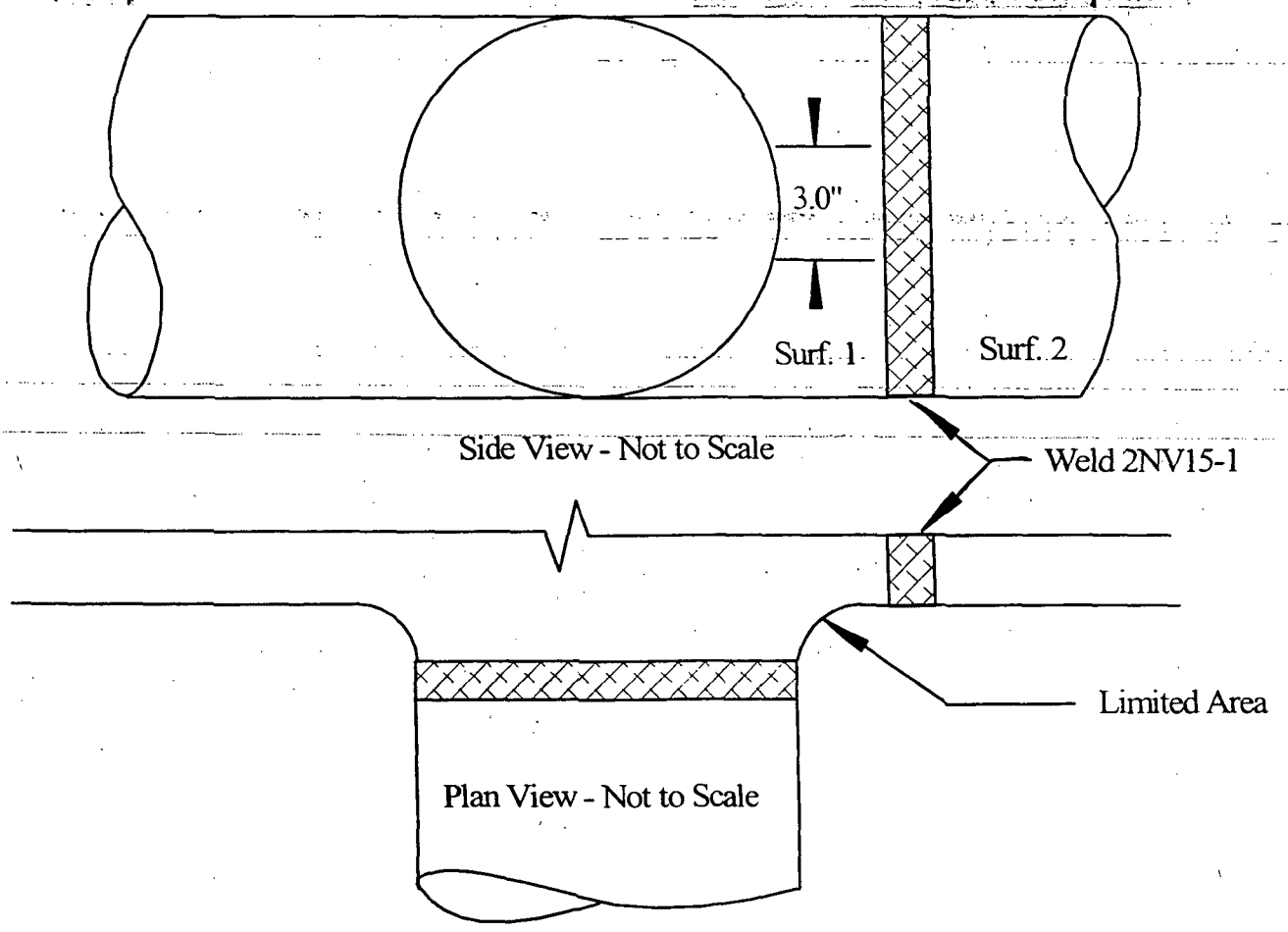

Limited 3" in throat area of Tee. From Lo + 9.2" to Lo +12.2" on Surface 1.

Inspector / Date : III 8/30/07 Page 3 of 4

% Coverage Calculations

Item No. : C2.C5.21.0057 **Weld No. : 2NV15-1**

Pipe Ø = **4.5"**

"t" = **0.531"**

Weld Length = **14.2"**

Limited scan on Surface 1 due to the throat of the tee for 3" of the weld length .

% of Length at throat of Tee = 3 / 14.2 x 100 = 21.1%.

% of Length examined 100% = 100 - 21.1 = 78.9%.

Aggregate Coverage Calculation

S1 = Tee	78.9 %	(78.9% of the Length x 100% of the Volume)
S1 = Tee	0 %	(21.1% of the Length x 0% of the Volume)
Total S1	78.9 %	
S2 = Pipe	78.9 %	(78.9% of the Length x 100% of the Volume)
S2 = Pipe	10.6 %	(21.1% of the Length x 50% of the Volume)
Total S2	89.5 %	
S3 CW= S1 & S2	78.9 %	(78.9% of the Length x 100% of the Volume)
S2	10.6	(21.1% of the Length x 50% of the Volume)
S1	0	(21.1% of the Length x 0% of the Volume)
	89.5 %	
S4 CCW = S1 & S2	78.9 %	(78.9% of the Length x 100% of the Volume)
S2	10.6	(21.1% of the Length x 50% of the Volume)
S1	0	(21.1% of the Length x 0% of the Volume)
	89.5 %	

Total = 347.4 ÷ 4 = 86.9% Aggregate Coverage

Inspector / Date: JIC 8/30/07 **Page** 4 **of** 4