Volume 3

Department of Energy
Washington, DC 20585

MAY 26 1993

Mr. Dennis M. Crutchfield
Associate Director for Advanced Reactors
and License Renewal
Office of Nuclear Reactor Regulation
U.S. Nuclear Regulatory Commission
Washington, D.C. 20555

Dear Mr. Crutchfield:

As you indicated in your letter, dated April 29, 1993, you are completing the final Preapplication Safety Evaluation Report (PSER) for the "Power Reactor Innovative Small Module" (PRISM) Advanced Liquid Metal Reactor design. You expressed concern about meeting one of the Commission's objectives of public disclosure since the PSER will be based on documents on which the Department of Energy (DOE), Office of Nuclear Energy, placed a restrictive distribution labeled "Applied Technology." We hereby approve your request for public disclosure and you are authorized to remove the "Applied Technology" (AT) distribution limitation from all of the DOE documents titled Preliminary Safety Information Document. The documents are:

"PRISM - Preliminary Safety Information Document" (PSID) - GEFR-00795

Volume I - December 1987, Chapters 1-4
Volume II - December 1987, Chapters 5-8
Volume III - December 1987, Chapters 9-14
Volume IV - December 1987, Chapters 15-17 and Appendices A-E
Volume V - February 1988, Amendment to PSID
Volume VI - March 1990, Appendix G

With regard to the Modular High Temperature Gas-Cooled Reactor (MHTGR), we would like to request that public disclosure of its AT information be delayed until publication of the MHTGR PSER becomes more imminent. We would appreciate your understanding of this

situation and assure you that we will release MHTGR AT for public disclosure when needed to support the PSER issuance. We will be happy to meet with you and your staff to discuss this further at your convenience.

Sincerely,

Jerry D. Griffith

Jerry D. Griffith
Director
Office of Advanced Reactor Programs
Office of Nuclear Energy

cc:
Salma El-Safwany, DOE/SF
James Quinn, GE
Richard Hardy, GE
Robert Pierson, NRC
Ray Mills, PDCO

TABLE OF CONTENTS

TABLE OF CONTENTS (continued)

TABLE OF CONTENTS (continued)

TABLE OF CONTENTS (continued)

TABLE OF CONTENTS (continued)

TABLE OF CONTENTS (continued)

TABLE OF CONTENTS (continued)

TABLE OF CONTENTS (continued)

TABLE OF CONTENTS (continued)

ABSTRACT

This document is a Preliminary Safety Information Document (PSID) for a PRISM (Power Reactor Inherently Safe Module) electric power plant. The PSID is the document in the PRISM licensing plan that provides the description and evaluation of the conceptual design using nine reactor modules. Each module is a compact liquid metal reactor of the pool type design. The reactor module has unique passive safety characteristics that enhance the safety of the design. These include passive shutdown heat removal and passive reactivity shutdown. The document presents design criteria, design description and analyses that demonstrate these favorable safety characteristics. The format is similar to the standard format for safety analysis reports, however, the design description and evaluations are consistent with the conceptual design level. Design basis accidents are described in Chapter 15 and a preliminary PRISM probabilitic risk assessment is included in Appendix A.

CHAPTER 9
AUXILIARY SYSTEMS

CHAPTER 9

AUXILIARY SYSTEMS

TABLE OF CONTENTS

TABLE OF CONTENTS (Continued)

TABLE OF CONTENTS (Continued)

TABLE OF CONTENTS (Continued)

TABLE OF CONTENTS

LIST OF TABLES

LIST OF TABLES (CONTINUED)

LIST OF FIGURES

LIST OF FIGURES (continued)

9.1

Chapter 9 AUXILIARY SYSTEMS

9.1 Fuel Handling and Storage

9.1.1 Design Bases

9.1.1.1 Functions

The reactor refueling system (RRS) provides the services for handling all core assemblies while at the reactor site. The primary functions of the Reactor Refueling System are as follows:

1. Receive, inspect, store and prepare new core assemblies for insertion into the reactor.
2. Transfer assemblies between facilities (e.g., reactor and reactor service building).
3. Transfer core assemblies between the core and in-vessel storage or transfer positions.
4. Provide temporary storage for spent core assemblies before transfer to the co-located fuel cycle facility, or off-site reprocessor if used.
5. Prepare spent core assemblies for shipment to off-site reprocessor if used.
6. Provide inventory control of all core assemblies.

Core assemblies are defined as fuel, blanket, control, and radial shield assemblies.

9.1.1.2 Design Requirements

9.1.1.2.1 General Requirements

The RRS consists of the systems and components required to receive, replace, store, and ship the core assemblies. These functions are accomplished by the reactor fuel handling system (RFHS), transport system (TS),

and the fuel receiving storage and shipping system (FRSSS). The requirements are as follows:

1. The RRS design and performance parameters are as follows:

Fuel Handling	
Interval	- 20 months
Number of Rotatable Plugs	- 1
Spent Fuel Storage Mode	- Interim Reactor Vessel Storage
Refueling Temperature (Shutdown)	- 400°F

2. The RRS shall be designed for a 60-year life. Systems and components that cannot achieve a 60-year lifetime shall be designed to satisfy the requirement by means of maintenance, replacement, or redundancy; and shall not impact the plant availability requirement.

3. The safety related systems (SRS) for the RRS shall be designed to be operable during an operating basis earthquake (OBE). The SRS shall be able to be safely shut down during a safe shutdown earthquake (SSE), and be capable of being maintained indefinitely in a safe shutdown condition.

4. The minimum design refueling interval shall be twenty months. All refueling, planned maintenance, and inspections requiring plant shutdown shall be accomplished during the planned, 22-day shutdown period every twenty months.

5. Maintenance and inspection shall be an integral function of the design process. Provisions for inspection, maintenance, and removal/replacement, including contingency for abnormal maintenance activities, shall be provided.

6. The design shall provide protection against design basis accidents.

7. Spent fuel radiation levels and decay heat shall be based on a five-year irradiation life source term for the appropriate assembly type.

9.1.1.2.2 Reactor Fuel Handling System

The reactor fuel handling system (RFHS) shall satisfy the following requirements:

1. The RFHS shall be capable of replacing the core components, including the fuel, blanket, radial shield, and control assemblies.

2. Refueling shall be accomplished with the primary coolant at 400°F and the reactor cover gas at atmospheric pressure.

3. The RFHS shall be capable of starting refueling four days after reactor shutdown and completing refueling within 22 days after reactor shutdown.

4. Spent fuel requiring cooling in excess of the RFHS cooling capability shall be stored within the reactor under sodium for a period of twenty months.

5. Failed fuel assemblies will require no special handling. Failed fuel assemblies will be stored in the reactor for twenty months before transfer to the fuel cycle facility.

6. An In-Vessel Transfer Machine (IVTM) shall be used to transport the fuel under the head within the reactor vessel.

7. The rotatable plug system in the reactor closure shall be used to position the IVTM and fuel at any azimuth location within the reactor vessel.

8. A fixed fuel transfer position shall be used to transfer fuel between the reactor vessel and the fuel transfer cask (FTC).

9. The reactor fuel transfer port shall be located in the fixed deck.

10. The control system for each RFHS component shall be designed as an integral segment of the overall reactor refueling control system. All RFHS components shall be capable of being activated by manual control as a backup mode.

11. The IVTM grapple, shall be able to rotate core assemblies for alignment into core position.

12. The IVTM holddown plate shall hold down adjacent core assemblies during withdrawal for the full length of the fuel assembly.

9.1.1.2.3 Transport System

The transport system (TS) consists of the fuel transfer cask (FTC), the cask transporter (CT), and the refueling enclosure (RE). The TS shall satisfy the following requirements.

1. The TS system shall provide a means of handling and transferring the FTC with new or spent core assemblies between the reactor and the fuel cycle facility.. The transfer shall not contaminate the reactor head during normal refueling.

2. The RE shall provide environmental protection over the reactor module during refueling and component replacement.

3. The CT shall provide a method of supporting and mating the FTC between the gate valves at the RSB and reactor module.

4. The TS shall provide a means of handling the caissons for replacing:
   a. Control rod drive assemblies
   b. Refueling machine
   c. Intermediate heat exchangers
   d. EM pump
   e. Miscellaneous components and special tools

5. The FTC shall provide locations for handling three core assemblies in the sodium-wetted drip condition.

6. The transporter shall be capable of freely moving between the RSB and any reactor module while transferring a FTC with core assemblies or caisson with reactor components.

9.1.1.2.4 Fuel Receiving, Storage, and Shipping System (FRSSS)

The FRSSS consists of the fuel handling cell, for receiving and temporary storage of new and spent core assemblies, and the integrated refueling control system which controls portions of the FRSSS in conjunction with the FHS. The FRSSS shall satisfy the following requirements:

1. The FRSSS shall be located within the Reactor Service Building.

2. Storage shall only be provided to accommodate one refueling change-out load.

3. New fuel shall be dry stored in the RSB. Prior to transfer to and insertion into the reactor, the assemblies will be preheated.

4. The design shall assume that a co-located fuel cycle facility will be available on site for processing metal fuel. Additionally, the design shall be capable, with minimal modifications, of providing for off-site shipment of spent assemblies.

5. The FRSSS shall be capable of transferring all the spent fuel from one refueling to an on-site co-located facility and to accept a reload of new assemblies in the period before the next scheduled refueling.

6. The FRSSS design shall preclude attaining $K_{eff} \geq 0.95$ during both normal and malfunction conditions.

7. The FRSSS shall be capable of receiving, storing, and transferring fuel handling operations while the plant is at full power.

8. The FRSSS shall be capable of starting refueling four days after reactor shutdown and completing refueling within 22 days after reactor shutdown.

9. Inventory monitoring and safeguard control for special nuclear materials shall be provided at all times and locations at the reactor site.

10. Control of the refueling operations shall be provided. Information and data shall be provided to the Plant Control System for monitoring of the refueling operations in the control center.

9.1.1.2.5 New Fuel Receiving

The plant fuel handling system shall be designed to receive new core assemblies from either truck or rail shipment.

9.1.1.2.6 Spent Fuel Shipping

The plant shall be designed to transfer spent fuel to a co-located fuel cycle facility for processing. Additionally, the design shall be capable of providing for off-site shipment of spent assemblies.

9.1.1.3 Process Requirements

9.1.1.3.1 Components Handled

Handling core components shall be based on core assembly configurations and data as follows:

1. Design of the RRS shall be based on handling new, spent, and failed core assemblies.

2. Design of the RRS shall be based on all core components handled by the transfer machines having identical handling sockets at their upper end and identical lengths of the core assemblies.

3. The RRS shall provide the capability to handle components at a rate necessary to support refueling operations.

4. Heat transfer calculation shall be based on normal and greatest possible thermal loads. For example, the thermal effect on a fuel assembly stuck inside the inert atmosphere of the FTC shall be based on the fuel assembly with the greatest decay power after 20 months in-vessel storage or a blanket assembly after reactor shutdown. The effect in the hottest fuel from a normal refueling sequence shall also be determined.

5. Design of the RRS shall consider the types of handling operations and their frequencies given in Table 9.1-1.

9.1.1.3.2 In-Reactor Vessel Fuel Storage Capacity

The RFHS shall interface with Reactor System which provides in-vessel storage for normal core component handling operations.

9.1.1.3.3 Transfer Limitations

The transfer machine load and speed capabilities shall be limited as follows:

1. All RRS transfer machines shall be designed to limit the maximum push and pull forces they are capable of exerting to prevent damage to core assemblies, the transfer machines or other components under unusual handling operations.

2. All RRS transfer machines shall be designed to limit push and pull forces during normal operations in order to apply only expected, reasonable handling loads on the core assemblies.

3. All RRS transfer machines shall be designed to limit maximum handling speeds for new and spent core assemblies in order to prevent possible damage during normal handling.

4. All RRS transfer machines shall be designed to minimize the impact load when seating a core assembly, grapple, or bucket by limiting the maximum setdown speeds.

5. All RRS transfer machines shall have electrical or mechanical interlocks that prevent release during normal operations of a grappled core assembly until the assembly is seated.

6. All RRS core assembly transfer machines shall include an overspeed control and fail-safe brake on the hoisting systems.

9.1.1.3.4 Misalignments

The following misalignment capability is necessary for handling core components because of normal assembly, thermal and operational tolerances.

1. RFHS equipment shall be designed with sufficient compliance and lead-in (combined with the lead-in of the component to be grappled) to permit grappling and insertion without excessive side loads, under total misalignments between the grapple and core component and between the core component and the core position, transfer position, or temporary storage position.

2. The tolerances and alignments of equipment shall be limited, so that the installed and operational misalignments from true position do not exceed specified amounts.

9.1.1.3.5 In-Reactor Vessel Transfer Operations

The in-reactor vessel fuel handling operations are restricted as follows to prevent fuel motion that would cause inability of the IVTM to normally find and grapple a core assembly and to prevent damage to control rods, core upper structure, or other equipment.

1. The procedure used during a normal refueling shall be to replace one core assembly at a time, such that two open lattices adjacent to each other do not occur in the core.

2. The number of open lattice positions shall not be restricted for unusual operations using special core assemblies (e.g., complete reactor unloading).

9.1.1.3.6 Core Assembly Cooling

During transfer operations, the RRS shall be capable of cooling fuel assemblies for an indefinite period as follows:

1. The RRS shall provide, or other supporting system shall provide, cooling of core assemblies to limit their steady-state temperatures to the values specified in Table 9.1-2 with decay heat specified in Table 9.1-3.

2. RRS equipment and facilities handling and storing spent fuel assemblies shall be provided with inherent means of cooling. Each means of cooling shall have the capability to remove the core assembly design decay heats specified in Table 9.1-3.

9.1.1.3.7 Storage Capacity

A dry inert gas temporary storage area for 58 new core assemblies shall be provided.

9.1.1.3.8 Receiving of New Core Assemblies

9.1.1.3.8.1 General

All new core assemblies shall be received and stored during the year preceding the next reactor refueling as follows:

1. Immediately upon receipt from the co-located reprocessing facility, new fuel shall be placed in the storage racks of the fuel handling cell (FHC).

2. The new fuel storage facilities and handling equipment shall be designed to accommodate proliferation-resistant new fuel.

3. New core assemblies such as control rods, and radial shields shall have a "hands on" inspection facility located in the receiving area. The receiving area shall have storage space for incoming new core assembly containers.

4. The FRSSS design shall preclude contamination of new core assemblies which could lead to potential flow blockage.

9.1.1.3.8.2 New Core Assembly Inspection

New fuel and blanket assemblies will receive all necessary inspections and verification at the co-located fuel cycle facility prior to transfer to the FHC. All incoming new control and shield assemblies shall be inspected as follows:

1. The FRSSS shall be designed to examine shipping containers externally for evidence of damage.

2. The FRSSS shall be designed to perform standard inspection of new core assemblies as listed below.
   a. Verify assembly identification by means of visual and mechanical examination of the assembly serial number and coding, respectively. Verify proper discriminator socket geometry, using "go/no go" gages.
   b. Visually verify absence of dents, nicks, and gouges, especially in the areas of: (1) hexagonal load pad corners, (2) inlet nozzle, (3) piston rings, (4) discriminator socket, and handling socket interfaces.
   c. Visually examine the internals of the outlet and the inlet nozzle to verify the absence of foreign objects or material.
   d. Visually examine shipping shock indicators.
   e. Visually examine core assembly duct for travel-induced bow or deformation.
   f. Inspect control rods for free operation of neutron absorber column with friction force.

3. The FRSSS shall be designed to provide nonstandard inspection, as listed below, of core assemblies for which defects were observed during the standard inspection.
   a. Photograph surface defect.
   b. Perform selected dimensional inspection of external features (i.e., outside diameter or distance across hexagonal flats) at any axial location. This inspection shall be performed using general-purpose tools and gauges available commercially.

4. Unacceptable core assemblies shall be dispositioned as determined by applicable quality assurance procedures; however, no additional FRSSS equipment shall be provided for this purpose.

9.1.1.3.9 Transfer Operations

The following operations are used to transfer core assemblies within or between fuel handling facilities.

1. Transfer operations between the reactor and RSB shall take place only when the reactor is shut down. Transfer operations within FRSSS facilities may be performed at any time.

2. The transfer of core assemblies between the reactor and the fuel cycle facility (FRSSS) shall be done with the fuel transfer cask (FTC).

9.1.1.3.10 Preparation and Transfer or Shipment of Irradiated Assemblies

The inert atmosphere fuel handling cell (FHC) shall provide for preparation of spent core assemblies for transfer or shipment as follows:

1. The FHC shall contain a handling and transporting method for moving drip dry spent core assemblies between the transfer port position and FHC temporary storage positions.

9.1.1.4 Structural Requirements

The structural design shall be based on the following:

1. A design factor of 1.5 shall be applied to the normal expected load (force) capabilities of the handling equipment to account for possible increased requirements. Safety factors shall be applied to the design factored loads.

2. Design of the RFHS shall be based on the design and normal steady-state operating conditions given in Table 9.1-4 and the design events as listed in Table 9.1-5.

3. The seismic category and method of analysis for subsystems and components are listed in Table 9.1-4. The seismic response spectrum to be used for seismic analysis shall be the building response at the location of the component support.

4. The seismic response spectrum to be used for seismic analysis of the FRSSS shall be the building response at the location of the component support.

9.1.1.5 Safety Requirements

9.1.1.5.1 General

The RRS shall satisfy the safety criteria as follows:

1. The safety class and corresponding codes and standards for RRS equipment and facilities shall be determined based on their safety significance. The safety classes of RRS equipment and facilities or components thereof shall be as shown in Table 9.1-6. The draft ANS 54.6 Standard, "LMFBR Safety Classification and Related Requirements," should be used as a guide in establishing these requirements.

2. The RRS design shall limit radiation exposure to 10CFR20 limits and ALARA (As Low As Reasonably Achievable) objectives during normal operation and anticipated events. The guidance in Regulatory Guides 8.8, 8.10, and 8.19 should be used to help meet ALARA objectives.

3. The RRS shall protect the health and safety of plant operators and the general public in accident situations. Table 9.1-7 contains a list of potential accidents which should be considered as a minimum.

4. The RRS equipment and facilities shall be designed to contain the gaseous radioactivity from the rupture of 271 pins.

5. The passive barrier between spent fuel handling operations and the environment shall be designed to reliably maintain its leak-tight integrity during normal operations and in accident situations. Radiation detectors shall be provided to detect significant radioactivity leakage through this barrier. Multiple seals with leak monitoring in the seal space shall be used for critical sealing functions.

6. The fuel handling system shall be designed to maintain fuel in a safe condition during and after all plant design basis accidents and following postulated evacuation of refueling personnel.

9.1.1.5.2 Criticality

The RRS design shall preclude attaining $K_{eff} \geq 0.95$ during both normal and malfunction conditions.

Materials having good neutron moderating properties shall not be used in RRS equipment or facilities.

RRS facilities in which an array of new or spent fuel assemblies can be stored shall be provided with criticality monitors. These monitors shall alarm if a condition of criticality is being approached.

9.1.1.5.3 Fuel Handling Equipment

Fuel handling equipment shall be designed to preclude dropping fuel elements. The requirements in the NRC Standard Review Plan, Section 9.1.4, "Fuel Handling System," and NRC Branch Technical Position APCSBP-1, "Overhead Crane Handling Systems for Nuclear Power Plants," shall be used where applicable.

Hard stops shall be provided at the end of the motions of transfer machines to prevent collision of the transfer machine with other objects.

9.1.1.6 Instrumentation and Control Requirements

9.1.1.6.1 Overall Refueling Control System

All functions performed by the RRS shall be controlled and monitored by an integrated overall refueling control system designed to support both normal and infrequent fuel handling operations. There shall be operations control over vital components to prevent unauthorized manipulation of said components by insiders. Access and operations control together address collusion threats.

The normal mode of control shall be by operator supervision of computer-controlled sequences. The computer shall also be used for directing the operator sequences to be used, and shall contain pertinent data useful to the operator, including the refueling plan.

Local control consoles shall be provided for the purpose of checkout, maintenance, or emergency operation of the RFHS components. These consoles shall be either located on the equipment or nearby where the operation can be directly viewed or viewed with TV.

9.1.1.6.2 Implementation of Refueling Plan

The refueling control system shall be capable of accepting and implementing a refueling plan and of accepting changes to the plan during the course of normal refueling operations.

The refueling plan shall contain a list of core assemblies, or groups of assemblies to be changed, and shall include: (1) the type, (2) the serial number, (3) the present location, (4) location after refueling is complete, (5) orientation of core assembly in core, (6) sequence in which core assemblies are to be moved, and (7) any special conditions.

A detailed refueling procedure for use by the operating personnel shall be prepared. It shall consist of all moves performed under automatic or manual control during the refueling operation and shall include specific reactor core positions and storage positions. The order of component replacement shall be chosen to satisfy the requirement of the refueling plan and to expedite refueling.

9.1.1.6.3 Inventory Control

This system should (1) perform nuclear materials measurements, (2) perform data analysis to account for nuclear material, (3) maintain records and provide reports, (4) assign and exercise responsibility for nuclear material, and (5) monitor internal movements, location, and utilization of nuclear materials as listed below.

1. Inventory control is defined as maintaining a record of the current location of all core assemblies on-site. A record of special core assemblies shall also be maintained.

2. A record of all core assemblies shall be maintained in an inventory control system having mutually independent entries and a process for noting and resolving discrepancies.

3. Core assemblies entering the plant shall be individually identified visually and recorded in the inventory manually and automatically as part of new fuel receiving inspection.

4. Core assemblies leaving the plant shall be physically identified as part of spent core assembly inspection. Identification data shall be entered into the inventory control system both manually and automatically.

5. Essential data to determine inventory changes in the nuclear materials shall be recorded automatically, with manual backup capability.

6. The inventory data shall be converted into an acceptable format and transmitted by the plant data handling and transmission function of the plant control system. Inventory data shall be stored.

9.1.1.6.4 Load Control

Push and pull loads on components handled shall be measured and controlled so that loads in excess of that normally required may be applied only under strictly controlled conditions. If loads above normal are applied, the peak load shall be recorded. Loads above normal shall actuate an interlock blocking planned operation until a supervisory release is input.

9.1.1.6.5 Controls and Interlocks

Controls and interlocks shall be provided to prevent accidents and to minimize plant unavailability. Controls and interlocks shall be fail-safe. Mechanical interlocks shall be used wherever possible.

9.1.1.6.5.1 Interlocks

Interlocks used to prevent events, or to mitigate the consequences of such events, which could result in: (1) failures endangering plant operating personnel, (2) significant plant or refueling unavailability, or (3) significant equipment or facility damage, shall be hard-wired.

All other interlocks may be accomplished by firmware or software.

Ideally, components involved in interlocks shall be completely independent of components performing control, monitoring, or other control system functions. Where this is not cost effective, these interlocks may be combined with control circuits, provided that protection will not be inhibited as a result of operation or failure of the control equipment.

9.1.1.6.6 Failure of Automated Equipment

9.1.1.6.6.1 Computer Failure

Failure of any automatic control equipment (e.g., the computer) shall not prevent refueling from proceeding. All control functions using computers, including sequence control and inventory control, shall also be provided with manual control. Under Manual control, actions shall be initiated manually, but may be controlled either manually or by the use of automatic controllers that are not dependent upon computers.

9.1.1.6.6.2 Backup Manual Control

Manual controls shall be provided as backup for equipment and facilities which are automatically controlled. The manual control point shall be located in view of the equipment or facilities being controlled when it is advantageous, and directly viewable; otherwise, the manual backup controls shall be in the refueling control console (RCC).

9.1.1.6.6.3 Computer Memory

The computer control system memory shall not be lost on loss of power and shall retain its data unaltered. Resumption of power following an outage shall permit resumption of computer operation.

9.1.1.6.7 Power Requirements

9.1.1.6.7.1 Available Voltages

Individual electrical equipment items of the refueling control system shall be designed to operate at one of the voltages supplied by the building electrical power system. If electrical equipment require voltages or regulation not supplied by this system, it shall be necessary for the control system to provide any additional equipment to obtain such voltages or regulation.

9.1.1.6.7.2 Emergency Power

RRS loads on the non-Class 1E Uninterruptable AC Power System (UPS) shall be strictly limited to those needed for transmitting alarms to the plant security system (per 10CFR73) and to those needed to prevent the loss of normal power due to faults endangering plant operating personnel or significant equipment or facility damage.

9.1.2 System Description

9.1.2.1 Summary Description

The reactor refueling system (RRS) provides the means of transporting, storing and handling reactor core assemblies, including fuel, blanket, control, and shield, within the PRISM Plant. The system consists of the facilities and equipment needed to accomplish the normal scheduled refueling operations and all other functions incident to the handling of core assemblies.

The RRS comprises three subsystems:

1. Reactor Fuel Handling System (RFHS)

2. Transport System (TS)

3. Fuel Receiving, Storage, and Shipping System (FRSSS).

Figure 9.1-1 depicts the arrangement of the RRS and a diagram of the flow is shown in Figure 9.1-2.

The function of the RFHS is to refuel the reactor. The system consists primarily of the in-vessel transfer machine (IVTM), the rotatable plug drive, and the fuel transfer port which are located entirely within the reactor area of the module.

The TS provides the means of moving the core assemblies between the reactor (the RFHS) and the fuel cycle facility (the FRSSS) during the refueling outage.

The FRSSS provides the means of receiving, storing, and transferring the core assemblies to the co-located fuel cycle facility. It also supports the RFHS during the refueling of the reactor.

New control and shield assemblies enter the fuel storage and transfer building (FSTB), are unloaded from their shipping containers, inspected, and are temporarily stored. New fuel and blanket assemblies are received from the co-located fuel cycle facility and stored in the fuel handling cell (FHC). After reactor shutdown for refueling, the new core assemblies are installed three at a time into a fuel transfer cask and transported to a module to refuel the reactor core. At the reactor module, new assemblies are exchanged for spent assemblies. Spent fuel assemblies are exchanged for previously stored twenty month old spent fuel assemblies. The fuel transfer cask with twenty month old spent fuel assemblies is transported to the FSTB for temporary storage in the FTC or transfer to the co-located fuel cycle facility.

Important fuel handling facilities and equipment shown located in the FSTB include the FHC, new and spent fuel transfer facilities, storage facilities, and a communication center from which refueling and other fuel handling operations are coordinated. The fuel transfer cask, cask transporter and refueling enclosure are part of the Transport System used to move core assemblies between the RSB and each reactor module during a refueling outage. The IVTM and rotating plug drives are located at the reactor module and are part of the reactor fuel handling system.

Prior to the start of refueling, a number of preparatory operations are conducted so that the reactor downtime is minimized.

All equipment and facilities to be used in the refueling and fuel handling operations are functionally checked out. This includes the communication center. Computers with associated hardware and software are checked out on simulators prior to use with the equipment.

The sequence for handling fuel begins with receipt of new fuel from the co-located fuel cycle facility. The new fuel is temporarily stored in a dry storage rack in the FHC, or the new fuel is moved directly into the FTC for transport to a reactor module for refueling. The FTC is a sealed and shielded structure that can carry three core assemblies.

Twenty-two days have been allotted for an average reactor refueling. This begins with reduction of reactor power from 100% to the power level from which the reactor is shut down. A refueling enclosure is placed over the reactor module and HAA cover removed. The sodium in the reactor vessel is cooled down to a refueling temperature of 400°F, the control rod drive-lines are disconnected from the absorber assemblies and raised, permitting rotation of the plug in the reactor closure, and the above closure IVTM drive mechanism is installed. Concurrently, the reactor cover gas is purged and purified to reduce radioactivity levels in the gas to a very low level. The gate valve and adapter are installed and the gate valve closed. The FTC port plug is removed and temporarily stored. This completes the preparation for refueling and permits operations to begin.

While final preparations are being made at the reactor, the FTC is loaded with three new fuel assemblies and transported from the RSB to the reactor module. The FTC is transferred into the RE and lowered into position onto the reactor gate valve port adapter. The IVTM, operating in conjunction with the rotating plug, commences the repetitive refueling cycle by removing a spent fuel assembly from the core and placing the assembly in an empty in-vessel storage position for twenty month storage. The refueling cycle includes picking up a new fuel element from the in-vessel transfer position, that was placed there by lowering one of the new core assemblies from the FTC. The new core assembly is transferred and installed into the vacated core position. The IVTM translates to an adjacent spent fuel assembly that is then removed and transferred to the

empty in-vessel storage position. The IVTM translates to an adjacent stored twenty month old spent fuel assembly for removal into the emptied transfer position. The spent assembly is raised into the FTC. The internals of the FTC are rotated to locate the next new fuel assembly in position over the reactor port and the new fuel assembly is lowered into the reactor transfer position for the IVTM to start replacement of the next core assembly. This cycle continues until 14 core elements are exchanged. The 44 assemblies of blankets, shields and control are exchanged in a similar manner except not placed in storage for the twenty month period. At this point the reactor refueling of the 58 core assemblies is completed.

After refueling is completed, the RFHS operations terminating refueling begin and are essentially the reverse of the preparation operations. The rotating plug is secured. Control rod drivelines are lowered and reconnected, and the reactor instrumentation is checked out. The FTC port is sealed, and the reactor is made critical and returned to full power.

Since the spent fuel has decayed for twenty month in the reactor, the low decay heat fuel will be temporarily stored in the FRSSS or directly transferred into the co-located fuel cycle facility. Spent control, radial shield, and blanket assemblies are handled in the same manner as fuel assemblies except they do not require in-vessel storage for twenty months. These components can be shipped directly to the co-located reprocessing facility during refueling operation.

9.1.2.2 In-Vessel Transfer Machine (IVTM)

The IVTM is used to handle fuel assemblies, control rods, and other reactor components in the sodium-filled core of the reactor. The design is a modified pantograph machine with rotary seals. The machine is used only during reactor shutdown and is located in a penetration in the rotatable plug. See Figure 9.1-3.

The machine is designed in two parts, the junction between the two parts is five feet above the rotatable plug. The drive section upper part is basically an electrically driven gear box for operating the in-vessel section lower part. It contains an electric motor, speed reducers, gears, torque limiting cluthes, emergency hand operators and other components necessary to provide control and instrumentation. See Figure 9.1-4.

The in-vessel section lower part is positioned vertically from the rotatable plug and extends 39 ft. into the reactor. The machine is positioned 3 ft. from the center of the rotatable plug. The machine can be rotated and the pickup leg driven outwards to position the grapple over the required fuel assembly. The pickup leg can be moved radially outward to 36 in. to position the grapple. The grapple can thus be positioned over any core assembly position.

The machine is normally stored, while the reactor is in operation, nearest to the transfer station with the pantograph pickup leg facing toward the transfer station. The machine can be rotated 225° with the stop on the centerline toward the center of the core. See Figure 9.1-5.

Position accuracy of the machine is essential and is provided by the instrumentation system. The instrumentation system will provide continuous position indication for the station control room of all machine movements.

9.1.2.3 Reactor Exit Port and Plug

The reactor exit port (Reactor System) in the reactor closure is fixed to the deck. For refueling, an adapter with a gate valve will be mounted on the port onto which is mated the FTC (with gate valve) for tne exchange of core assemblies. The port is not cooled as thermal analysis indicates cooling of the port is not required.

The port is plugged and sealed during reactor operation. For refueling, this plug is unfastened and hoisted into a cask by the plug hoist and the cask removed from the HAA and temporarily stored. The plug hoist is driven from outside of the cask.

The refueling port plug consists of thermal and nuclear shielding. The lower end of the plug contains reflective shielding plates to match the design of the reactor closure. The plug closely fits the reactor port. The upper end of the plug is attached to the port cover, which is attached to the plug bail for lifting and removal. Following refueling, the refueling port plug is returned to the module, lowered into place and sealed.

9.1.2.4 Rotating Plug Drive

The plug drive is an electromechanical system in which electrical power to the motor of the plug drive is controlled to rotate and position the reactor rotating plug and IVTM during refueling.

In the drive, the output torque of the motor is transmitted through a reduction gear set to impart rotational motion to the reactor rotating plug. By controlling the electrical power to the motor, clockwise (CW) motion, counter-clockwise (CCW) motion, accurate angular positioning of the plug is achieved. Electrical feedback signals from a tachometer integral to the motor and from a position encoder driven from the final output gear are provided to the control portion of the system.

The drive unit is mounted on the deck to drive the single rotating plug.

A microcomputer-based control system provides automatic, local, and remote modes for operating the system. In automatic operation, the microcomputer provides the position, direction of rotation, and start/stop commands for operation of the plug. In the local mode of operation, manual inputs for position, direction of rotation, the preprogrammed acceleration and deceleration rates and the speed of operation are achieved by controlling the polarity and magnitude of the voltage applied to the drive motor under the control of the microcomputer. Indications of dynamic plug position, speed, direction of plug motion, and torque values are outputs from the microcomputer provided to assist the operation in controlling the system.

Provision for testing the operation of the system without moving the plug is provided through the use of the test motor assembly. This assembly provides tachometer and position feedback signals and permits testing of all operation modes of the system.

The local console is located in the refueling enclosure area and provides alarms for all modes of operation in addition to controls for operation of the plug. In all modes of operation, the Plug-in-Motion light flashes when the plug is in motion, and the horn sounds for 3 sec before the plugs start to move. The controls and indications provided for local operation are an amber light to show that this console is operational for operating the plug and switches to control plug motion in the CW and CCW directions, to select the speed of operation, and to provide emergency stop.

9.1.2.5 Refueling Enclosure (RE)

The refueling enclosure shown on Figure 9.1-6 is a mobile, self-propelled enclosure which is placed above the reactor during refueling and maintenance to maintain a clean habitable atmosphere and protection to the fuel handling equipment and controls. The refueling enclosure is moved on rubber tires. It is located above the reactor head access area roof and lowered by a hydraulic jacking system. Lowering of the enclosure establishes a seal around the perimeter, providing an enclosed space protected from the environs. Once positioned, the enclosure is locked by hold-down lugs. The refueling enclosure is powered by an electric motor supplied from batteries located in the enclosure. An enclosed cab is provided for the operator. The mobile refueling enclosure is equipped with a crane which is used to remove the reactor head access area plug prior to refueling and position it for storage at an appropriate location in the enclosure. The crane is also used to hoist equipment for maintenance or replacement. Lighting, crane power along with electrical power is provided by the site. For refueling, the cask transporter enters the enclosure through the roll-up door. The enclosure door is kept closed during the operation of fuel transfer between the fuel transfer cask and the reactor

to maintain a clean atmosphere. The refueling enclosure structure consists of a steel frame with heavy insulated metal siding and roof. It is classified as Seismic Category I, and is non-tornado hardened.

9.1.2.6 Fuel Transfer Cask (FTC)

The FTC is a multi-element cask used to transfer three fuel assemblies or two blanket assemblies between the FSTB and reactor module. The cask, shown on Figure 9.1-7 is 22 feet 11.25 inches high and 53.20 inches outside diameter. The structure has a 15.35-inch thick composite wall structure consisting of concentric steel, depleted uranium, B_4C in a copper matrix (75% Cu) cylinders.

Within the cavity is a three-location carousel that is suspended, rotated and positioned from the top. The carousel is motor driven to position each of the locations over the gate valve opening when desired to discharge an assembly from the cask. To discharge a core assembly, a drive deploys a bi-stem that is attached to on the side of the pot. The stem stays attached to the pot while in the reactor but is able to be detached for maintenance at the FSTB. By locating the bi-stem at a specific location on the pot, the IVTM has the freedom to move into position over the pot,
engaging and removing the core assembly for transfer within the core area and thus reduce the number of steps during a refueling cycle.

9.1.2.7 Cask Transporter

The cask transporter shown, in Figure 9.1-8, is a mobile, self-propelled rail transporter that moves a fuel transfer cask. The fuel transfer cask is a shielded and inerted cylinder, about 4 feet in outside diameter and 20 feet high. The fuel transfer cask is raised and lowered to mate with the fuel transfer ports by a hydraulically operated system on the cask transporter. An alignment mechanism allows the operator to position the transporter above the reactor being refueled and the RSB fuel transfer port. The cask transporter is equipped with two pressure storage tanks and a compressor for purging the gas lock area between the fuel transfer cask

and the reactor fuel transfer port. One tank contains clean helium and the other, shielded, contains purged helium. The cask transporter is powered by a diesel engine and is equipped with an enclosed cab for the operator. The cask transporter is constructed of structural steel and is classified non-seismic Category I, Type A. The cask, however, is classified Category I and is tornado hardened.

9.1.2.8 Fuel Handling Cell and Fuel Shipping

The fuel handling cell, shown in Figures 9.1-1, and 9.1-9, consists of the cell structure which provides the inert gas containment, shielding, access, viewing, and transfer ports between the FTC and the co-located fuel cycle facility. The telescoping tube hoists and transfer carts are used to support and transport the fuel assemblies between transfer stations, storage racks and ports in the cell.

The following portions of this section describe the details and components used in the PRISM design with a co-located fuel cycle facility.

9.1.3 System Performance Characteristics

The RRS performs the normal operating modes, infrequent modes, and off-normal modes.

During normal refueling of the reactor, the TS and FRSSS must support the RFHS to achieve a refueling rate so that at normal working efficiencies the reactor refueling can be completed within the allotted 22 days.

For the PRISM plant of nine modules, refueling of modules will be in progress the good portion of the twenty month period and therefore the FRSSS will be continuously in the process of receiving and preparing new fuel for the next refueling outage along with transferring spent core elements as they are discharged from each reactor. During the time between module refuelings, the fuel handling equipment will be maintained to assure proper operation.

Normal Operating Mode

The RFHS will normally operate according to a planned schedule of core assemblies to be replaced. The actual order of assemblies to be replaced will be determined by reactor operations. The spent control assemblies are exchanged first to increase core negative reactivity. The lower heat-producing spent fuel assemblies following a twenty month storage are exchanged, then the radial shields, and last, the higher heat-producing spent blanket assemblies are exchanged in reverse order of decay power. As a consequence of this refueling sequence, time is permitted for the reduction of decay heat of the blankets to permit drip dry removal without in-vessel storage time. The normal maximum fuel assembly from a previous refueling outage will be producing about 1.3 kW of decay energy. There is no fuel assembly decay heat problem in the reactor vessel or in the transferring the fuel assemblies three at a time in the FTC in the drip dry condition. Radial Blanket assemblies will be transferred two at a time in the FTC in the drip dry condition while internal blankets will be transferred one at a time.

Table 9.1-1

FREQUENCY OF NORMAL AND INFREQUENT HANDLING OPERATIONS

	Number of Events During Life of Plant*	
	Expected	Design
Normal Operations		
Normal Refueling	29	40
Infrequent Operations		
Initial Reactor Loading	1	1
Complete Reactor Unloading and Reloading	0	1
Final Reactor Unloading	1	1

*60 year plant design life

Table 9.1-2

IRRADIATED FUEL ASSEMBLY DESIGN TEMPERATURE LIMITS
DURING FUEL HANDLING AND STORAGE

Operation	Peak Mid-Wall Cladding Temperature Limit (°F)
Normal Operation and Anticipated Events	
Handling	1150°F
Short-Term Storage (FHC)	1150°F
Unlikely and Extremely Unlikely Handling Events	1250°F

Table 9.1-3

DESIGN DECAY HEATS FOR RRS

Equipment or Facility	Design Decay Heat (kW)
In-Reactor Storage	
Normal Refueling	20
Hottest Fuel	35
Fuel Transfer Cask	
Normal Refueling Load - 3 Fuel Ass'ys, 2 Blanket Ass'ys	3.9
Fuel Handling Cell (FHC)	
Fuel Handling Machine	1.3
New Fuel Receiving Equipment and Storage	
Total for Refueling - Prior to Transfer to Reactor	0
Single Assembly	0

TABLE 9.1-4

STRUCTURAL DESIGN BASIS (RFHS & ITS)

SUBSYSTEM or COMPONENT	CONSTRUCTION CODE	SEISMIC CATEGORY	METHOD OF SEISMIC DESIGN AND ANALYSIS	DESIGN CONDITIONS	NORMAL STEADY-STATE OPERATING CONDITIONS	
				TEMPERATURE (°F)	TEMPERATURE (°F)	PRESSURE (psig)
IVTM Drive	Comm.	1	Dynamic	125	125	14.7
IVTM In-Vessel	ASME III, 1	1	Dynamic	950	475*	TBD
IVTM Grapple	ASME III, 3	1	Dynamic	950	475*	-
Plug Drives	Comm.	2	Dynamic	165	140	-
FTC Hoist	Comm.	1	Dynamic	150	120	-
FTC Bucket	ASME III, 1	1	Dynamic	1500	500	-
FTC Rx Port	ASME III, 1	1	Dynamic	165-950	120-475	TBD
FTC Rx Port Plug	ASME III, 1	1	Dynamic	165-950	120-950	TBD
RSB Port	ASME III, 2	1	Dynamic	165	120	14.7

* 875°F Sodium outlet temperature during reactor operation.

Table 9.1-5

DESIGN EVENTS IN REACTOR

Subsystem or Component	Operation	Number of Occurrences per 60 Years	Load or Force	
			Normal	Maximum Expected
IVTM Hoist	Lift/Pull	50,000*	1000	3000
	Lower/Push	50,000*	1000	1500
	Grapple Operation	50,000 *	-	-

* For each reactor module

TABLE 9.1-6

REACTOR REFUELING SYSTEM EQUIPMENT SAFETY CLASSIFICATION

	Equipment	Safety Class
1.	IVTM In-Vessel	SC-1
2.	IVTM Grapple	SC-3
3.	FTC	SC-1
4.	FTC - Reactor Port	SC-1
5.	FTC - Reactor Port Plug	SC-1
6.	FTC - FHC Port	SC-2
7.	FHC Handling Equipment	SC-2

TABLE 9.1-7

UNUSUAL EVENTS TO BE CONSIDERED IN DESIGN AND ANALYSIS OF THE RRS

Event
Random fuel rod leakage in equipment or facility
Single operator error
Failure of any single active component
Malfunction of a RFHS grapple requiring cleaning or repair
Loss of all off-site power
OBE
SSE
Inability to release a grappled component
Failure of a grapple, requiring replacement
Dropping of a component by hoisting equipment
Cover gas purification system failure
Insertion of incorrect assembly into empty position or an assembly into an already occupied core position
Dropping of a core assembly into storage from a height exceeding 3 inches
Immobilization of heat-producing core assembly during normal operations
Storage of up to 1% defected fuel
Inability to move rotatable plug

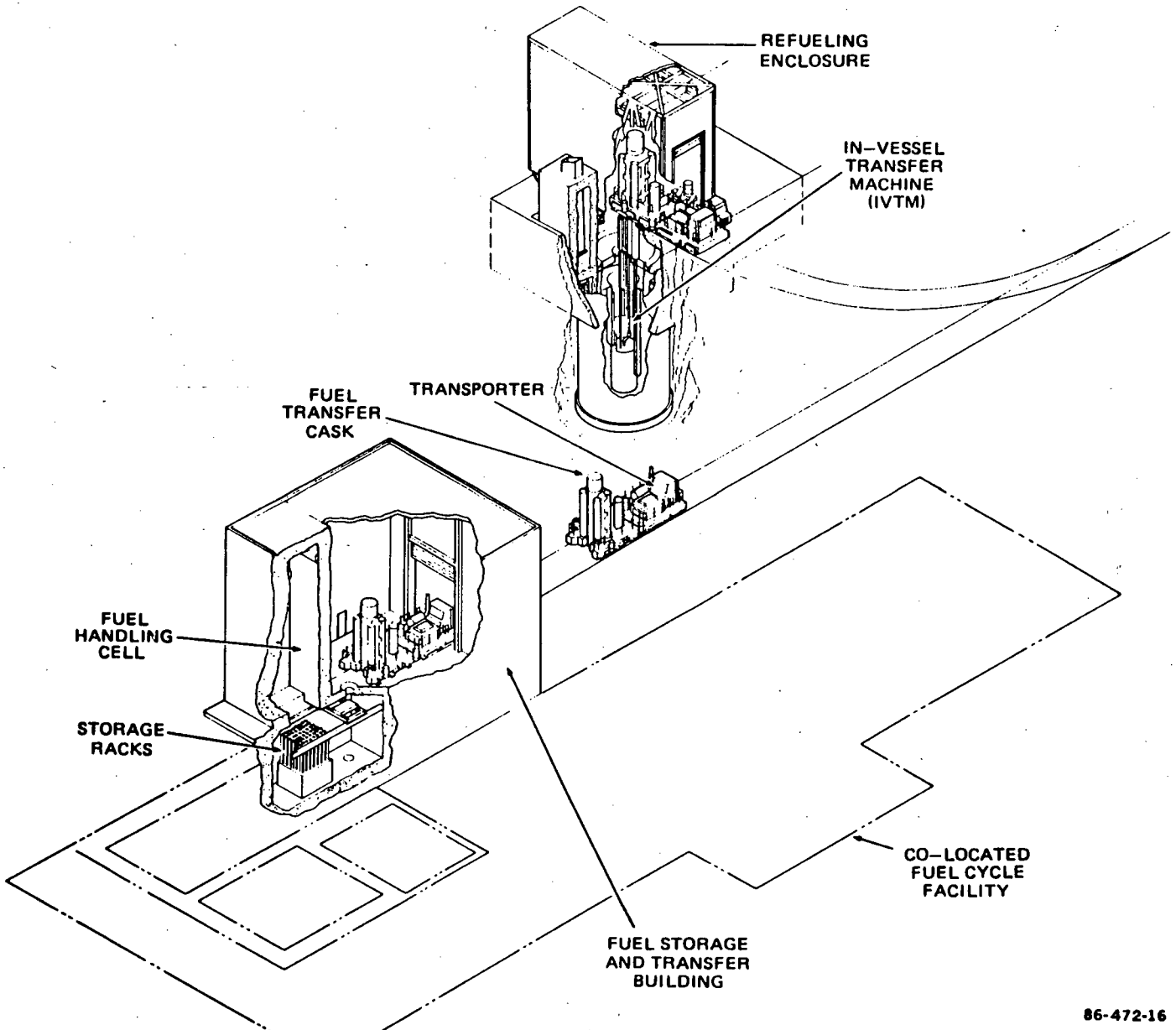

Figure 9.1–1 REACTOR REFUELING SYSTEM

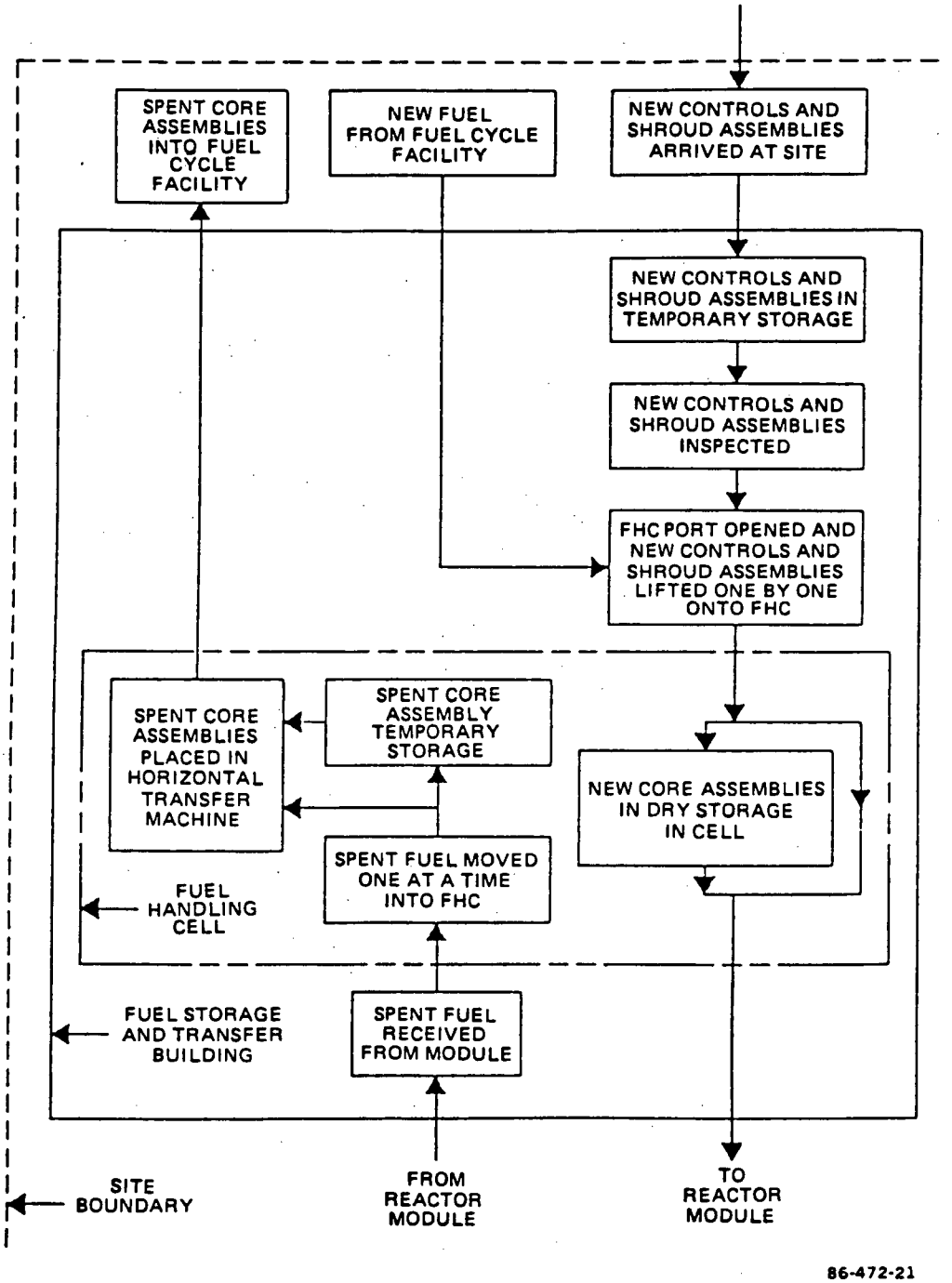

Figure 9.1–2 FUEL FLOW DIAGRAM

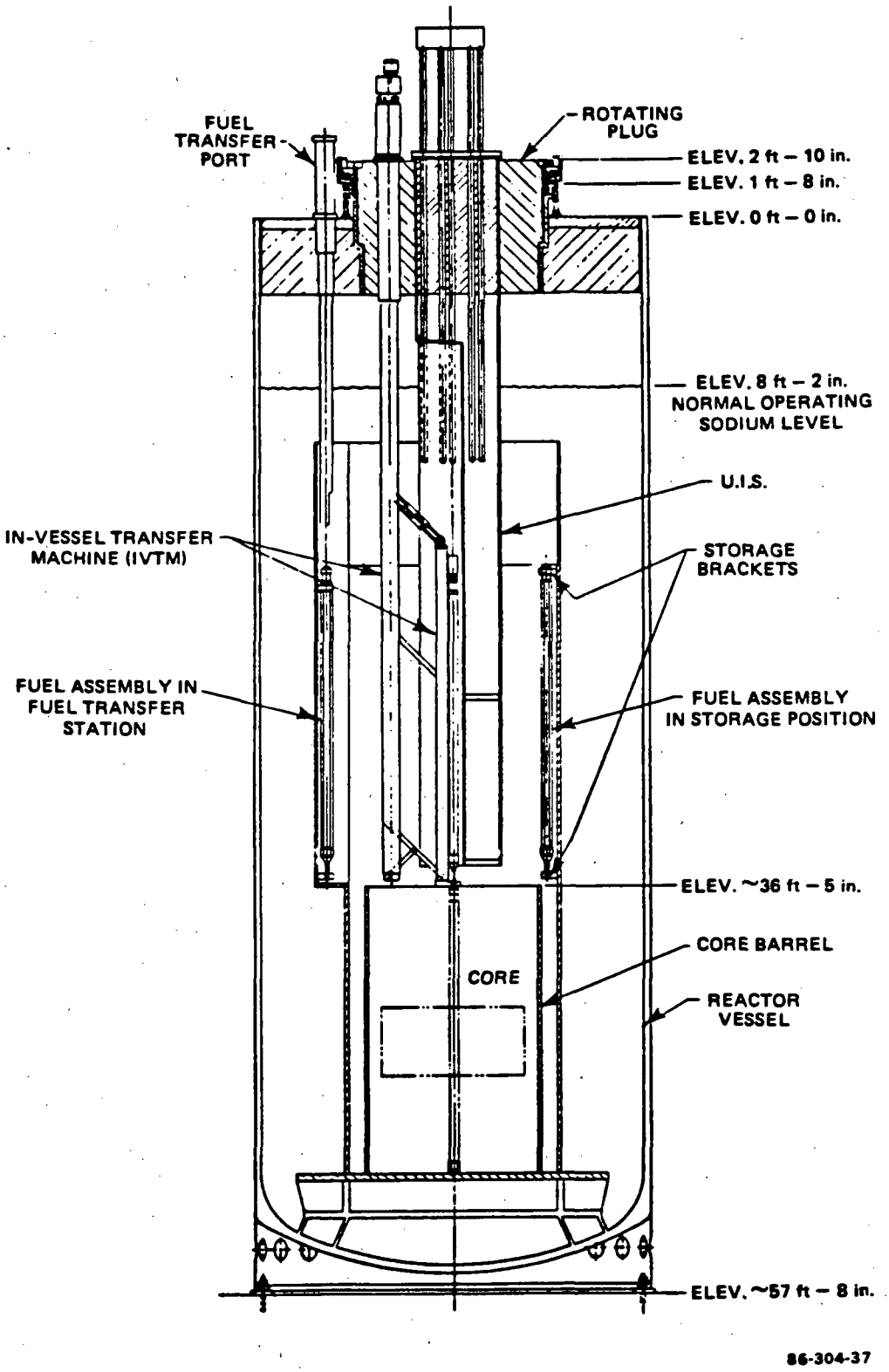

Figure 9.1–3 REACTOR REFUELING ARRANGEMENT

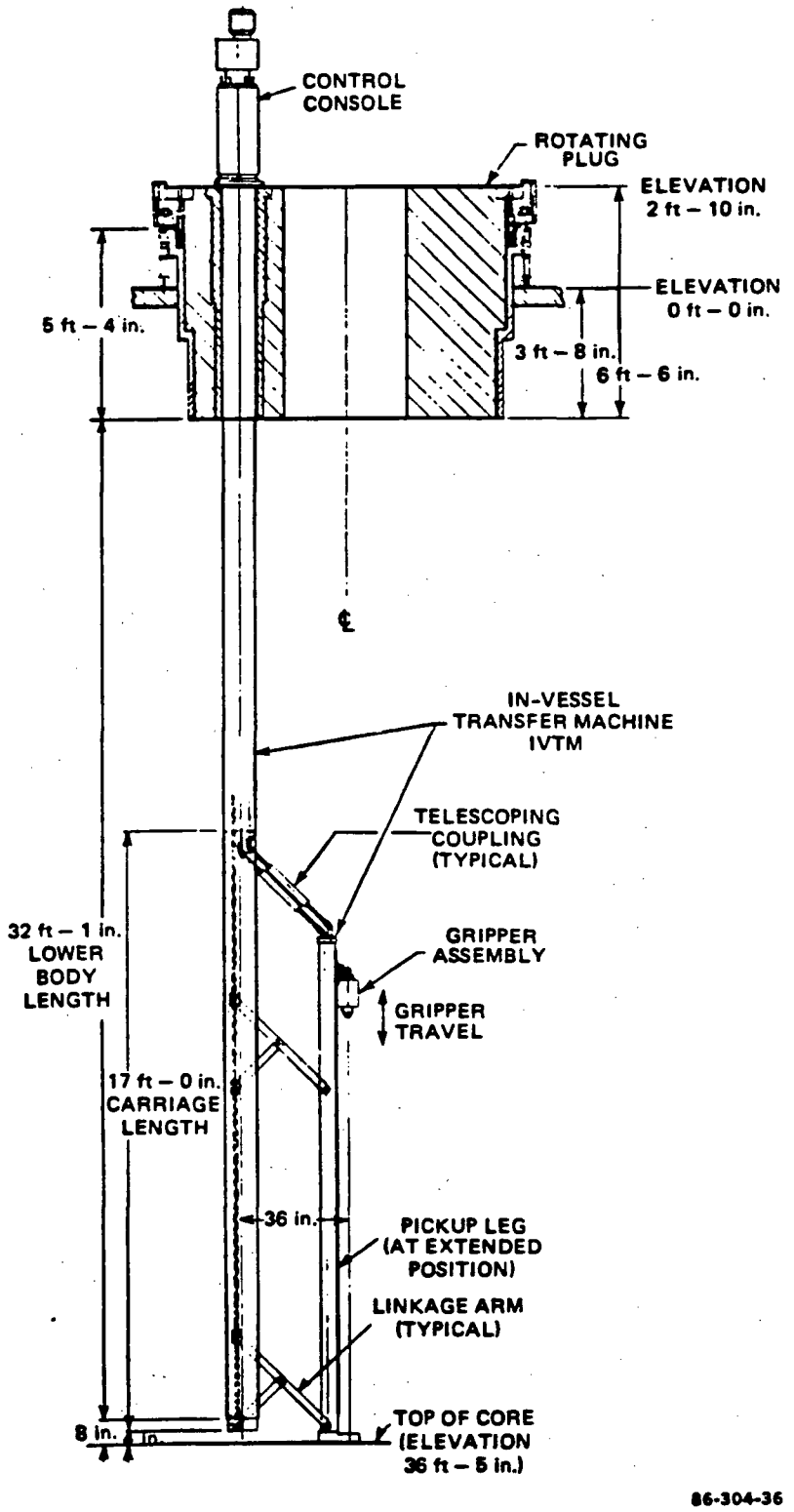

Figure 9.1–4 IN-VESSEL TRANSFER MACHINE

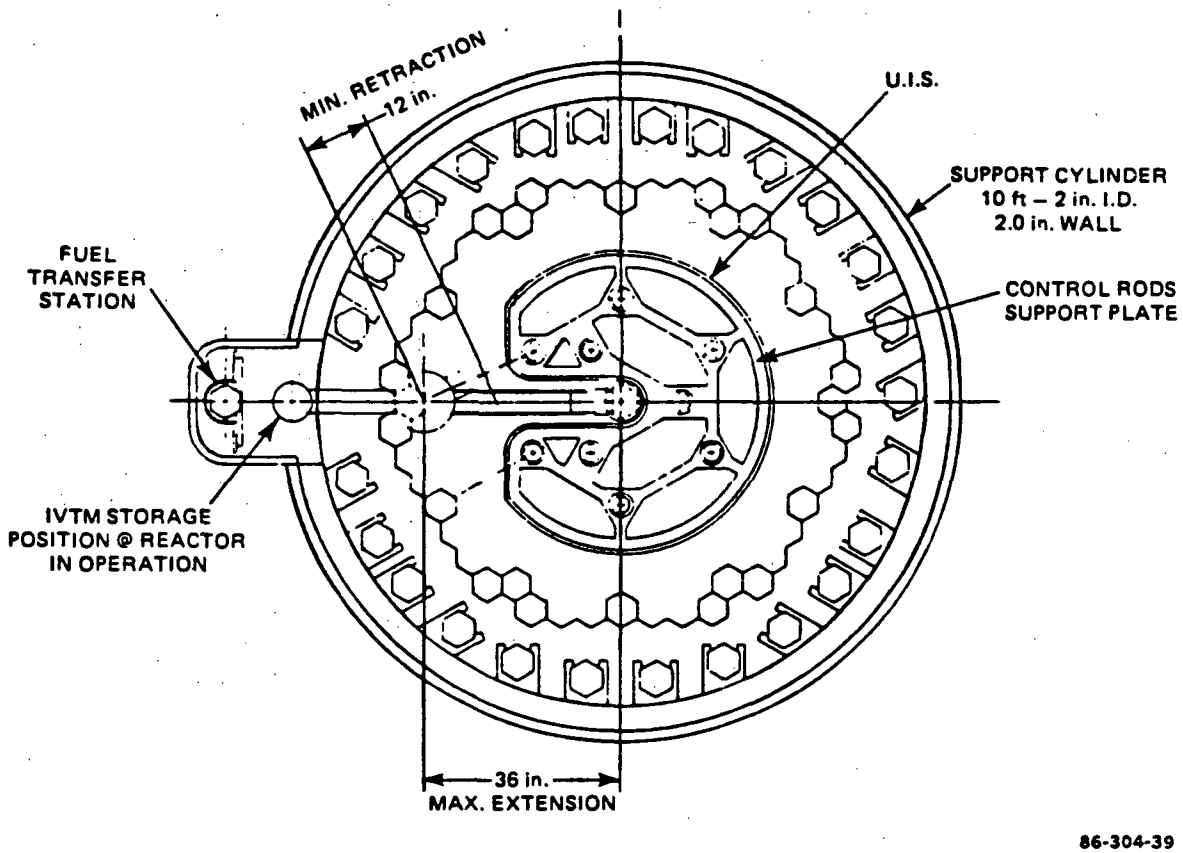

Figure 9.1–5 REFUELING FEATURES – PLAN VIEW SECTION

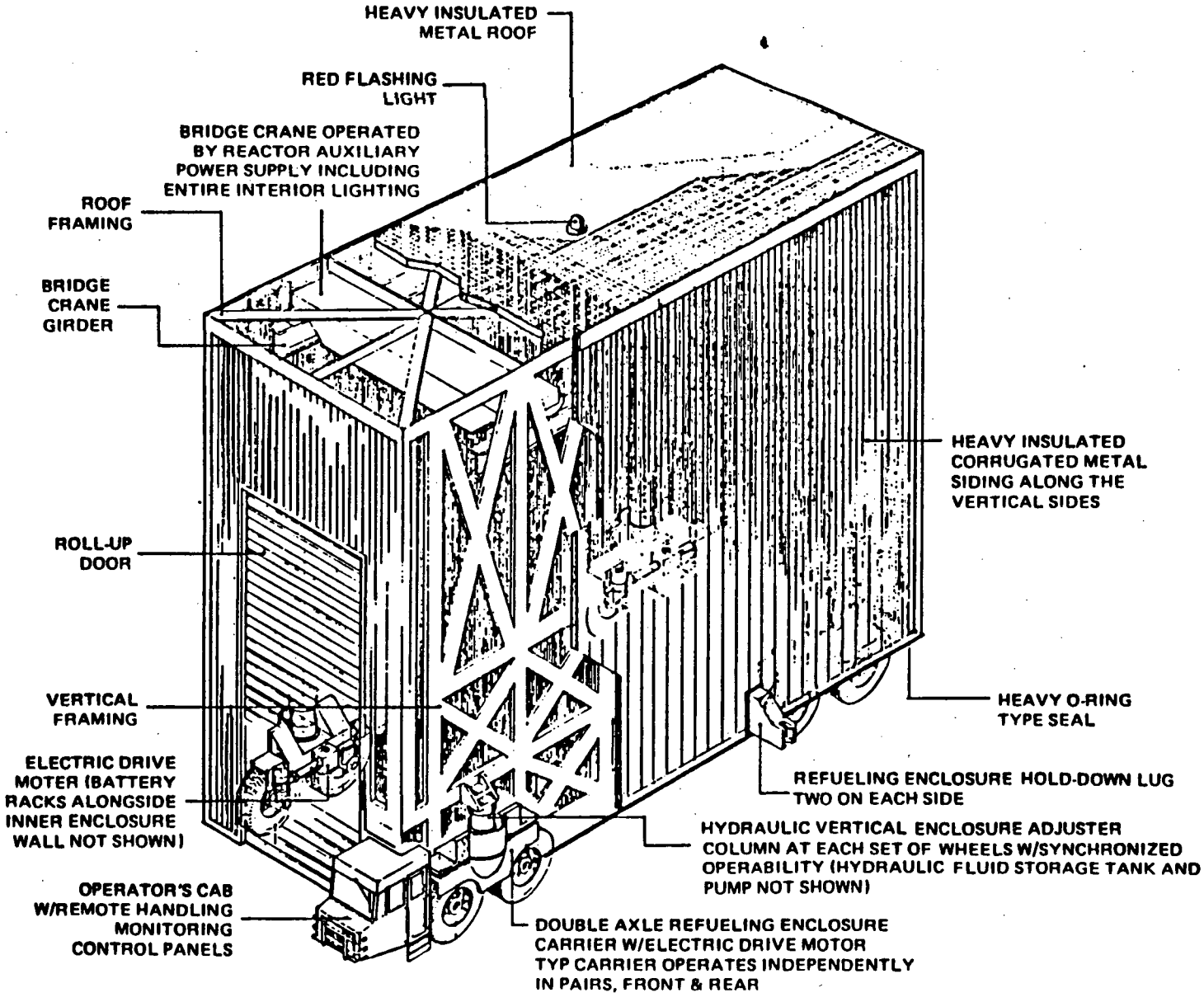

Figure 9.1–6 REFUELING ENCLOSURE ILLUSTRATION

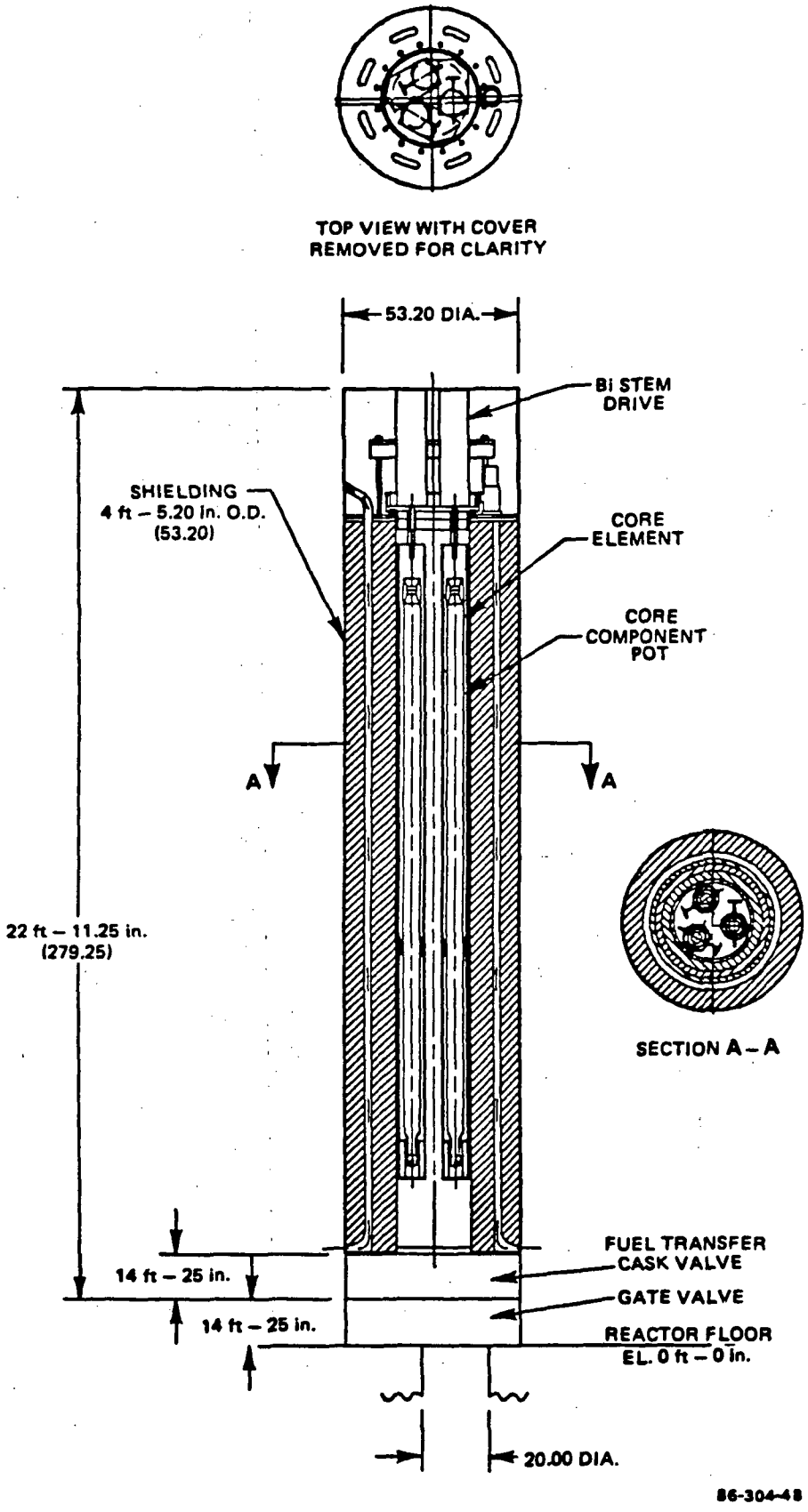

Figure 9.1–7 FUEL TRANSFER CASK

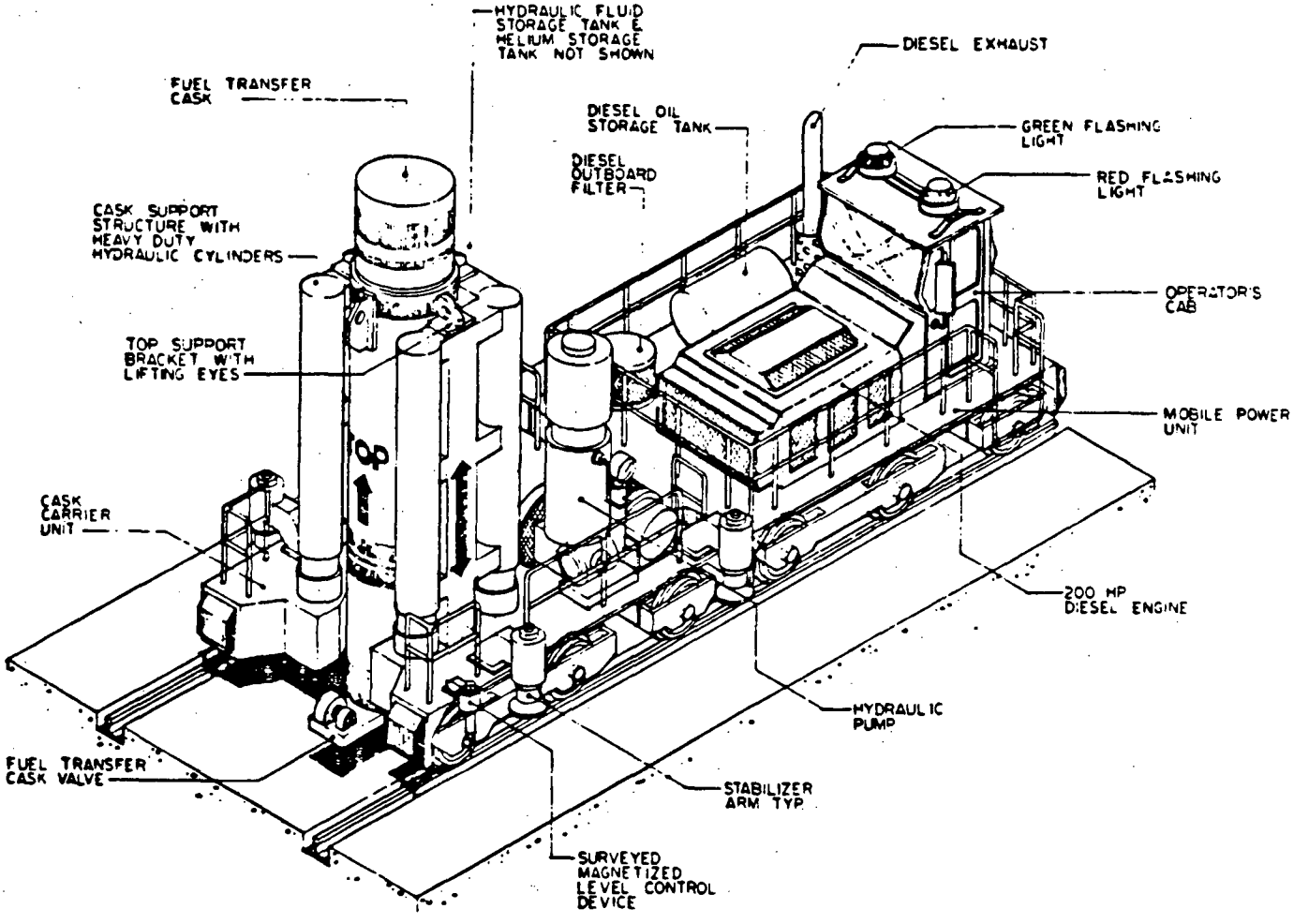

Figure 9.1–8 CASK TRANSPORTER ILLUSTRATION

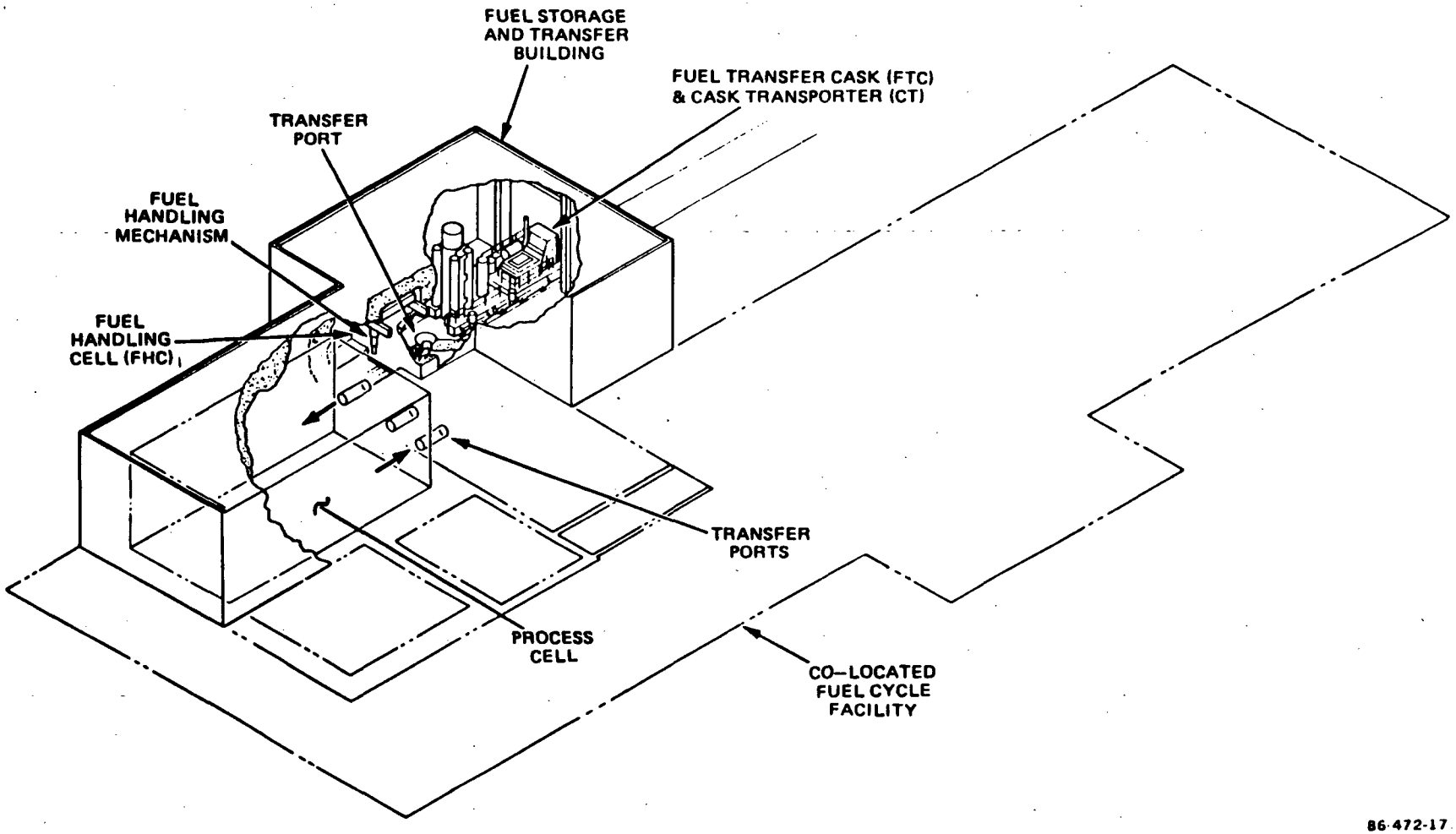

Figure 9.1–9 RRS ARRANGEMENT, WITH PROCESS CELL

9.2

9.2 Water Systems

9.2.1 Plant Service Water System

The plant service water system is a recirculating, evaporative type system. This system transfer heat from the BOP auxiliary systems to the circulating water cooling towers during normal plant operation. The turbine plant component cooling water system is part of the plant service water system.

9.2.1.1 Design Bases

9.2.1.1.1 Functions

9.2.1.1.1.1 Plant Service Water System

The function of the plant service water system is to provide cooling water to various in-plant heat exchangers and condensers and transfer all plant system heat loads to the circulating water cooling towers. Components supplied with cooling water by this system include the following:

1. Chilled water mechanical refrigeration units condensers
2. Turbine auxiliaries
3. Turbine plant component cooling water heat exchangers

9.2.1.1.1.2 Turbine Plant Component Cooling Water System

The function of this closed loop system is to provide cooling water to remove heat generated by the turbine generator auxiliary equipment. It provides a barrier between potentially oily and other contaminating plant components and the Plant Service Water System. The components served by this system include:

1. All heat exchangers associated with the turbine plant sampling system and control fluid coolers
2. Instrument air compressor water jackets and after coolers
3. Isolated phase bus duct coolers

9.2.1.1.2 Design Requirements

9.2.1.1.2.1 Plant Service Water System

The plant service water system shall be designed to:

1. Provide required cooling functions during normal plant operations, upset conditions, and shutdown periods when instrument air, service air, sampling, and chilled water are necessary
2. Maintain system pressure so that in-leakage into the closed loop cooling subsystems and other components served will be precluded
3. Provide service water with a maximum supply temperature of 95°F
4. Provide service water to the chilled water mechanical refrigeration condensers at a minimum temperature of 55°F
5. Provide makeup to the fire protection system
6. Provide for the design pressure and rating as follows:
   a. Pressure at pump discharge header: 50 psig
   b. Total plant flow: 24,000 gpm
7. Provide cooling water for the following subsystems and components:
   a. Chilled water unit condensers
   b. Generator stator and exciter coolers
   c. Generator hydrogen coolers
   d. Turbine lube oil coolers
   e. Condenser vacuum pump coolers
   f. Component cooling water heat exchangers

9.2.1.1.2.2 Turbine Plant Component Cooling Water System

The Turbine Plant Component Cooling Water System shall be designed to:

1. Provide required cooling function to all components served based on maximum design conditions
2. Operate at pressure levels compatible with the service water system to prevent in-leakage

3. Maintain component cooling water minimum and maximum temperatures of 70°F and 100°F, respectively, during normal plant operation and service water temperature excursion
4. Provide for the design pressure and rating as follows:
   a. Pressure at pump discharge header: 60 psig
   b. Total plant flow: 500 gpm
   c. Cold leg temperature range: 70°F to 100°F
5. Provide cooling water for the following subsystems and components:
   a. Instrument air compressor coolers
   b. Main and reheat steam grab sample coolers
   c. Sample chiller cooler
   d. Sample cooling rack
   e. Electro-hydraulic fluid cooler
   f. Isophase bus duct coolers

9.2.1.2 System Description

9.2.1.2.1 Plant Service Water System

The plant service water system provides water for cooling plant auxiliaries and to the turbine plant component cooling water system heat exchangers. The heat removed from these auxiliaries is rejected to the heat rejection system. Simplified flow diagrams of these systems are shown in Figures 9.2-1 and 9.2-2, respectively.

Since the major users of service water are associated with the turbine-generators, the plant service water system is unitized with each of the plant nuclear steam supply systems. The pumps are located in the circulating water pump houses. For each nuclear steam supply system (turbine-generator) there are two 100 percent capacity pumps--one normally operating, one on standby. A header connected to the individual nuclear steam supply steam headers supplies service water to the plant common auxiliaries.

The plant service water system pumps cooling water from the cooling tower basin to the various plant heat exchangers for cooling purposes and returns it to the circulating water system cooling tower for cooling. The system is designed to have a stable flow and velocity through the tubes of all components supplied with plant service water to minimize sedimentation problems, tube fouling, and erosion.

9.2.1.2.2 Turbine Plant Component Cooling Water System

The turbine plant component cooling water system consists of a closed cooling water loop cooling water for each power block. It provides cooling water for various turbine-generator auxiliary equipment which exhibit potential for oil contamination of the service water.

The turbine plant component cooling water system consists of two pumps and two heat exchangers, a head tank, chemical addition tank, and interconnecting piping. Normally, one pump and one heat exchanger are in operation. The second pump and heat exchanger are spares and are rotated into service on a scheduled basis.

The turbine plant component cooling water systems pumps the heated cooling water through the turbine plant component cooling water heat exchangers, where the system heat load is transferred to the plant service water system. The cooled water then circulates through the system components and back to the pump suction.

9.2.2 Chilled Water System

9.2.2.1 Design Bases

9.2.2.1.1 Functions

The chilled water system provides chilled water during normal plant operation for air conditioning and heat removal from selected plant areas for personnel comfort and/or protection of temperature sensitive equipment.

9.2.2.1.2 Design Requirements

The chilled water system shall be designed to maintain normal design ambient air temperatures in various areas throughout the plant during normal operations. This system shall be designed in accordance with the following parameters:

- Chiller outlet water temperature 45°F
- Chiller inlet water temperature 60°F
- Outlet design pressure 100 psig
- Inlet design pressure 125 psig
- Chiller duty (total) 5×10^6 Btu/hr
- Chilled water flow rate (total) 700 gpm
- Chiller condenser cooling water flow 1,000 gpm
- Chiller condenser cooling water temperature:
  - Tmax = 95°F
  - Tmin = 60°F

9.2.2.2 System Description

The chilled water system consists of the necessary equipment, piping, valves, instrumentation and controls in accordance with the system design requirements. A simplified flow diagram of this system is presented in Figure 9.2-3.

The chilled water system is designed as a single large loop cooling water system. Heat from the equipment served by this system is transferred to the Plant Service Water System. The system operates during normal modes of plant operation.

The system consists of three 50 percent capacity chilled water pumps, three 50 percent capacity water chillers, an expansion tank, a chemical feed tank and interconnecting piping and valves. The pumps are located upstream of the chillers. Two pumps and their associated chillers operate normally with the third chiller/pump combination provided as a standby. During periods of reduced system heat load, only one pump and its associated chiller need be operated.

Each chilled water pump forces water through the evaporator of its associated water chiller where the system heat load is removed from the chilled water and transferred to refrigerant. The refrigerant in turn transfers the heat to the plant service water in the chiller condenser. The chilled water is then circulated through the user components where it picks up heat and returns to the chilled water pump suction.

The system supplies cooling water to selected plant areas at a temperature of 45°F. Due to the nature of the components cooled by this system, the heat load on the system should remain fairly steady during normal operation. However, water chiller operation will automatically compensate for any fluctuating heat loads to maintain a relatively constant 45°F supply temperatures.

An expansion tank is provided in the system to accommodate thermal expansion and contraction of the system water inventory particularly during system startup and shutdown. Makeup to the system is provided from the demineralized makeup water to the expansion tank. A chemical feed tank is provided for adding corrosion inhibitors to the system. Thermal relief valves are provided in the piping between the block valves of all components cooled by the system to protect against overpressurization of isolated piping due to continued heat input and thermal expansion. All components have inlet and outlet manual block valves to allow isolation for maintenance. The outlet block valve also functions as a system balancing valve.

9.2.3 Treated Water System

The treated water system is comprised of the following subsystems:

1. Makeup water treatment
2. Steam generator blowdown cleanup
3. Potable water
4. Chemical feed

9.2.3.1 Design Bases

9.2.3.1.1 Functions

9.2.3.1.1.1 Makeup Water Treatment Subsystem

The makeup water treatment subsystem includes makeup water pretreatment and makeup demineralization processes. The main functions of this subsystem are as follows:

1. Pretreat raw water to provide filtered water for the following usages:
   a. Feed to the makeup demineralizers
   b. Feed to the hypochlorite generator
   c. Seal water
   d. Feed to potable water system

2. Demineralize pretreated water to provide demineralized water for the following:
   a. Makeup to condensate system
   b. Makeup to turbine plant component cooling water system
   c. Makeup to other closed cooling and heating systems
   d. Backwash and regenerant chemical dilution water for makeup demineralizers
   e. Dilution water for various chemical feeds
   f. Decontamination water for various radwaste facility usages
   g. Makeup to the auxiliary boilers

9.2.3.1.1.2 Steam Generator Blowdown Cleanup Subsystem

The cooled steam generator blowdown stream (unflashed) is treated in separate deep bed demineralizers and approximately 90 percent of the stream is returned to the condensate system.

9.2.3.1.1.3 Potable Water Subsystem

The potable water subsystem receives pretreated water from the makeup water treatment subsystem, treats and distributes potable water to various plumbing fixtures and other service throughout the plant buildings.

9.2.3.1.1.4 Chemical Feed Subsystem

The chemical feed subsystem provides various chemicals necessary for the chemical treatment of condensate, raw water, cooling towers, and potable water. Control equipment monitoring water quality parameters determine the periods when the chemical feed system will operate to maintain necessary water quality during all modes of plant operation.

9.2.3.1.2 Design Requirements

The treated water system shall be designed to:

1. Treat raw water and provide approximately 400 gpm of pretreated water (Raw water is given in Tables 9.2-1.)
2. Provide approximately 100 gpm of demineralized water (Demineralized water quality and flow requirements is given in Tables 9.2-2.)
3. Provide chemicals for the treatment of all plant makeup and other operating water requirements
4. Treat 400 gpm of steam generator blowdown
5. Provide 10,000 gal/day of potable water

9.2.3.2 System Description

A simplified flow diagram showing all subsystems is presented in Figure 9.2-4.

9.2.3.2.1 Makeup Water Treatment Subsystem

The makeup water treatment subsystem consists of the pretreated water and makeup demineralization systems.

The pretreated water system consists of a coagulator/clarifier with chemical feed, a clearwell, clarified water transfer pumps, three pressure filters, a clarified water storage tank, two pretreated water transfer pumps and interconnecting piping and valves.

The demineralized water portion of this subsystem consists of two trains of filter/demineralizers each comprised of a carbon filter, cation and anion exchangers, a mixed bed demineralizer, a demineralized water storage tank, two demineralized water transfer pumps, and interconnecting piping and valves to distribute the water to the users. Normally, one demineralized water transfer pump is in operation. The other pump is used as a backup whenever the operating pump fails or demineralized water demands exceed the operating pump's capacity.

The demineralized water distribution system supplies the water to various makeup systems and services throughout the plant. The demineralized water is used for initial system filling, providing makeup to tanks and systems during plant operation, sample sink flushing, flushing water in various systems and plant components, and flushing water through hose connections located around the plant. The demineralized water system is designed to operate at all times--even during plant shutdown, when demineralized water demands are primarily for maintenance operations and makeup to the auxiliary boiler.

9.2.3.2.2 Steam Generator Blowdown Clean-up Subsystem

The steam generator blowdown clean-up subsystem provides for treatment of steam-generator blowdown for reuse in the main steam cycle. This system consists of two trains of mixed bed demineralizers, one on standby or regeneration and one operating. Steam generator blowdown, cooled in the blowdown heat exchangers, is headered from the three nuclear steam supply systems and directed to the demineralizers located in the water treatment building. The treated blowdown is returned to the condensate cycle via the main condenser hotwells. No pumps are required since the pressure of the blowdown is about 150 psig at the inlet to the blowdown heat exchangers.

9.2.3.2.3 Potable Water Subsystem

This subsystem consists of a chlorinator, a domestic water storage tank, a domestic water transfer pump, a hydropneumatic tank and associated piping and valves. Potable water from the pretreatment is chlorinated prior to entering the storage tank. The storage tank is sized to maintain a one day reserve for all normal potable water services. The operating potable water transfer pump takes suction from the potable water storage tank and delivers it to the hydropneumatic tank. From there it is distributed to the plant users. One pump is normally cycling on hydropneumatic tank level, the second pump is on standby and starts automatically upon failure of the first pump. Tank freezing is prevented by constant pump recirculation flow. Backflow preventers are installed in the supply lines to prevent possible contamination of the potable water system.

9.2.3.2.4 Chemical Feed Subsystem

The chemical feed subsystem consists of equipment, piping, valves, instrumentation and controls. It provides various chemicals necessary for the chemical treatment of condensate, raw water, cooling towers, and potable water as follows:

1. Sulfuric acid and caustic soda storage tanks for demineralizer resin regeneration
2. Sulfuric acid storage tank with metering pumps for the cooling tower pH adjustment
3. Ammonia and hydrazine storage and mixing tank with metering and transfer pumps, and transfer pumps for the control of the condensate and feedwater chemistry
4. Hypochlorite generating plant for the biological control of water

9.2.4 Water Source System

The water source system provides a continuous supply of water to the heat rejection system cooling tower basin as makeup for evaporation, drift,

and blowdown losses from the towers. This system also supplies the water treatment facility with raw water in order to meet all process water requirements.

9.2.4.1 Design Bases

9.2.4.1.1 Functions

The water source system performs the following functions:

1. Provides makeup water to the plant cooling towers to balance losses associated with normal operation of the cooling tower
2. Provides raw water to the makeup water treatment facility in quantities sufficient to meet all process water requirements

9.2.4.1.2 Design Requirements

The water source system shall be designed in accordance with the following requirements:

1. Provide water for cooling tower makeup and all treated process, service, and potable water uses
2. Accommodate plant duty cycle transients
3. Meet the maximum total plant makeup requirement of approximately 24,000 gpm
4. Provide pressure at pump discharge of approximately 65 psig
5. Screen particulates 3/8 in. or larger
6. Bury, insulate, or heat trace piping and components exposed to outdoor environment, as appropriate

9.2.4.2 System Description

The water source system flow diagram is presented in Figure 9.2-5. Raw water is pumped from a nearby river into a common supply header to the cooling tower basins and to the plant water treatment facilities.

The system consists of three 50 percent capacity vertical, wet pit pumps and three 50 percent capacity traveling screens. The pumps and screens are located in an intake structure at the river bank. Each pump and traveling screen pair is located in a separate bay.

Water from the river flows through fixed and traveling screens, where solids down to 3/8 in. are removed, to the pump pits. It is pumped to the plant through a common header. Pump controls and monitoring instrumentation are located in the plant main control room.

9.2.5 Waste Water Treatment System

This waste water treatment system is comprised of the following subsystems:

1. Waste water disposal
2. Sanitary waste disposal

9.2.5.1 Design Bases

9.2.5.1.1 Functions

9.2.5.1.1.1 Waste Water Disposal Subsystem

The waste water disposal subsystem performs the following functions:

1. Collects and treats all non-radioactive liquid plant wastes from all in-plant processes
2. Recycles or disposes of all liquid and solid wastes in accordance with local, state, and Federal guidelines and restrictions

9.2.5.1.1.2 Sanitary Waste Disposal Subsystem

The sanitary waste disposal subsystem performs the following functions:

1. Collects, treats, and disposes of all sanitary wastes during plant construction, normal plant operation, and maintenance outages
2. Disposes of all liquid and solid wastes (sewage) in accordance with local, state, and Federal effluent guidelines and regulations

9.2.5.1.2 Design Requirements

9.2.5.1.2.1 Waste Water Disposal Subsystem

The waste water disposal subsystem shall receive, handle, and treat the following plant wastes and drainages:

1. Makeup (M/U) demineralizer regeneration waste water
2. Mixed bed regeneration waste water
3. M/U mixed media filter backwash
4. M/U activated carbon filter backwash
5. All plant floor drains including oil contaminated drains
6. Cooling coil drainage
7. Liquid radioactive waste processing discharge
8. Treated sanitary waste water disposal
9. Non-sodium fire protection water
10. Cooling tower blowdown
11. M/U clarifier blowdown
12. Waste water thickener blowdown
13. Auxiliary boiler blowdown
14. Chemical waste water

The waste water disposal subsystem shall be designed in accordance with the following requirements:

1. Monitor and discharge 2,100 gpm of cooling tower blowdown to the river
2. Sized so that approximately 500 gpm of miscellaneous plant waste water can be adequately processed

3. Dispose of waste water to the river by mixing with cooling tower blowdown
4. Provide treated wastewater discharges that meet, as a minimum, all local, state, and Federal requirements
5. Monitors the releases of liquid effluents and tritium, as required by 40CFR423

9.2.5.1.2.2 Sanitary Waste Disposal Subsystem

This subsystem shall be designed in accordance with the following requirements:

1. Avoid a degradation of the receiving body of water to prevent a public safety hazard or nuisance
2. Provide for hydraulic load based on an average flow of 35 gallons per day per man for the peak 8-hour shift
3. Use an average 5-day biochemical oxygen demand (BOD) loading for both construction and operating periods of 0.045 pounds per man per day

9.2.5.2 System Description

9.2.5.2.1 Waste Water Disposal Subsystem

All waste water streams are collected and diluted with the cooling tower blowdown prior to discharge into the receiving body of water (nearby river) through a discharge diffuser. A simplified flow diagram of this system is presented in Figure 9.2-6.

Plant oily waste water is processed through oil interceptors with oil residue directed to the oil storage tanks. The oil and water stream is processed further by utilizing a system of pumps, oil separators, solid prefilters, coalescent and carbon filters before routing to the discharge piping. The oil residue is disposed by burning in the auxiliary boilers.

Chemical wastes are neutralized by acid or caustic feed prior to introduction into the waste water discharge piping. The liquid radioactive waste processing discharge is also introduced into the waste water discharge piping.

Normal non-oil-contaminated waste is discharged through an oil interceptor, the purpose of which is to prevent oil from being discharged to the river in case of an accidental oil spill.

Waste water from the water treatment building carrying a high concentration of solids such as filter reclaimers is directed first to a settling basin to retain the solids before discharge to the river.

9.2.5.2.2 Sanitary Waste Disposal Subsystem

The sanitary waste disposal subsystem collects sanitary waste from all sanitary fixtures and conveys the waste to the sewage treatment plant. Following treatment, the waste is discharged, via the Waste Water Disposal Subsystem, to the receiving water body. Sludges produced in the aerobic digester are collected by a licensed contractor and disposed of offsite. A simplified flow diagram of this system is shown in Figure 9.2-7.

Table 9.2-1

RAW WATER QUALITY*

Constituent	Concentration Average - Maximum
pH	7.3 - 8.2
Total alkalinity (mg/l as $CaCO_3$)	118 - 132
Total hardness (mg/l as $CaCO_3$)	120 - 144
Chloride (mg/l as Cl-)	7.5 - 12
Sulfate (mg/l as SO_4^{-2})	18 - 28
Total dissolved solids (mg/l)	164 - 278
Total suspended solids (mg/l)	10 - 110
Total PO_4 (mg/l as PO_4^{-3})	0.02 - 0.04
Sodium (mg/l as Ca)	5 - 10
Calcium (mg/l as Na)	31 - 48
Silica (mg/l as SiO_2)	- - -

*Assumed analysis pending availability of actual site data.

Table 9.2-2

DEMINERALIZED WATER QUALITY

Constituent	Concentration
Specific conductivity @ 25°C	0.1 micromho/cm
pH @ 25°C	6.5 - 7.5
Total metallic purity *	9 ppb
Total iron (as Fe)	5 ppb
Total copper (as Cu)	2 ppb
Total nickel (as Ni)	2 ppb
Silica (as SiO_2)	5 ppb
Chloride	1 ppb
Sodium (as Na)	1 ppb

* Total metallic residue retained on 40 micron filter

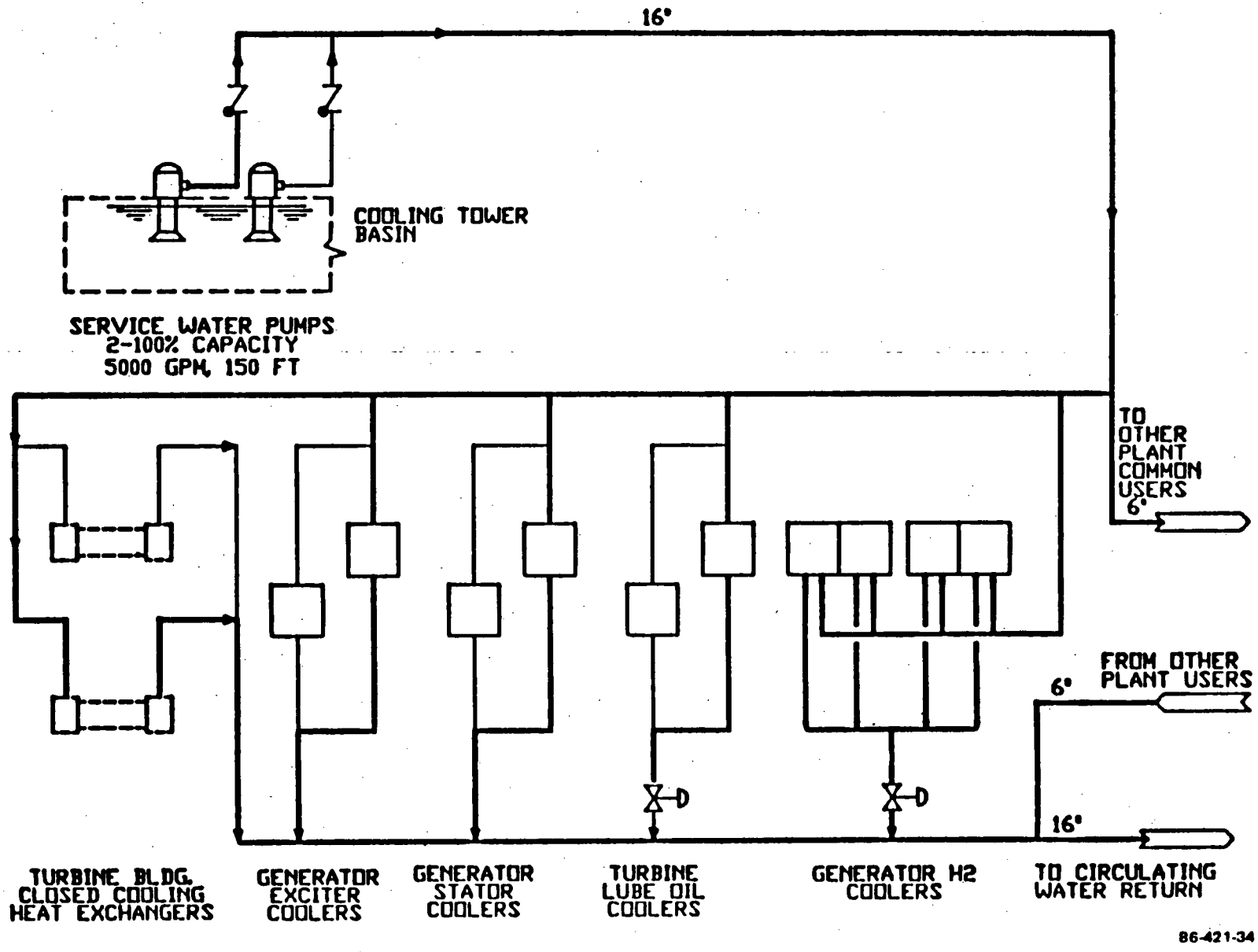

Figure 9.2–1 PLANT SERVICE WATER SYSTEM FLOW DIAGRAM

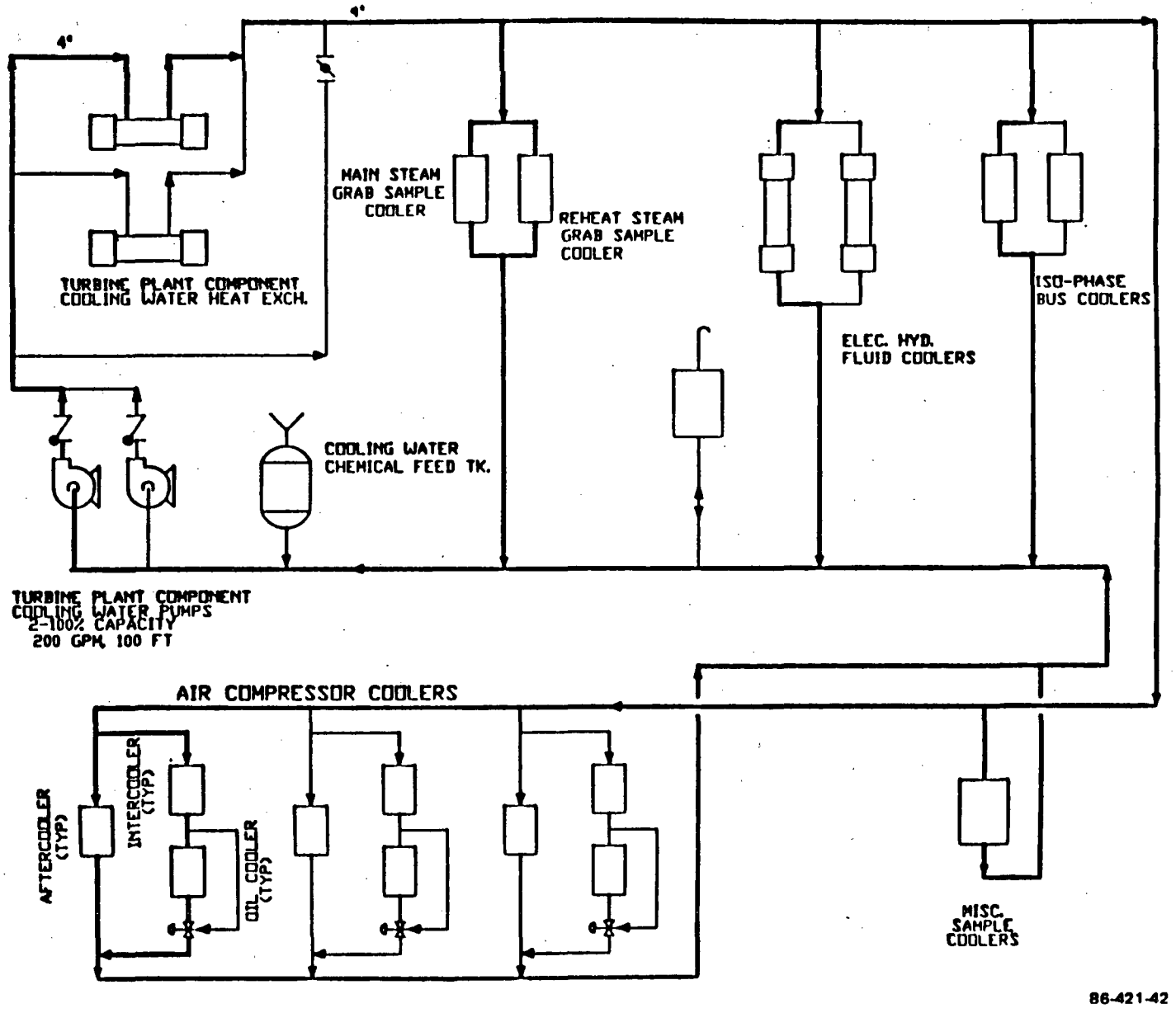

Figure 9.2–2 TURBINE PLANT COMPONENT COOLING WATER SYSTEM FLOW DIAGRAM

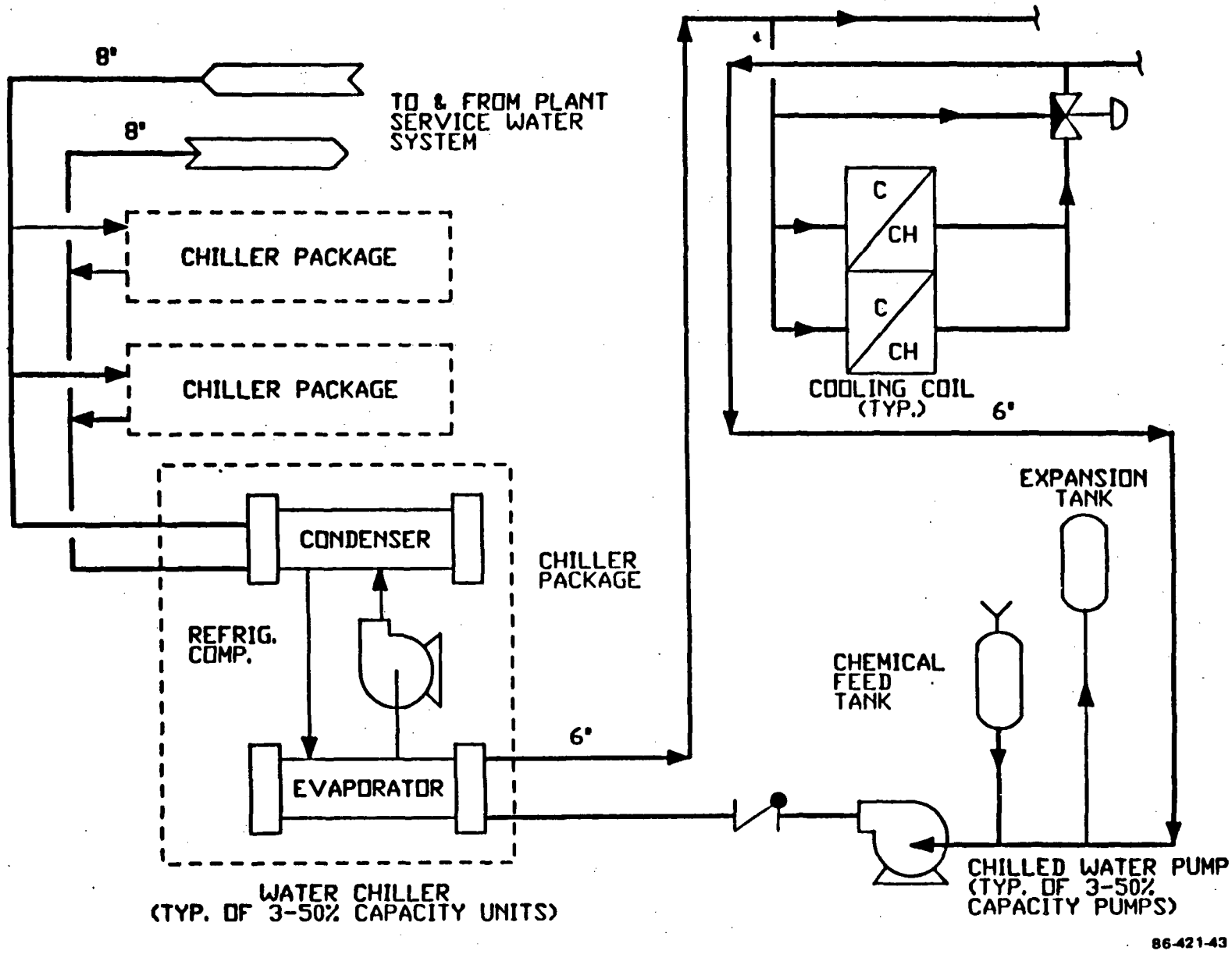

Figure 9.2–3 CENTRAL CHILLED WATER SYSTEM FLOW DIAGRAM

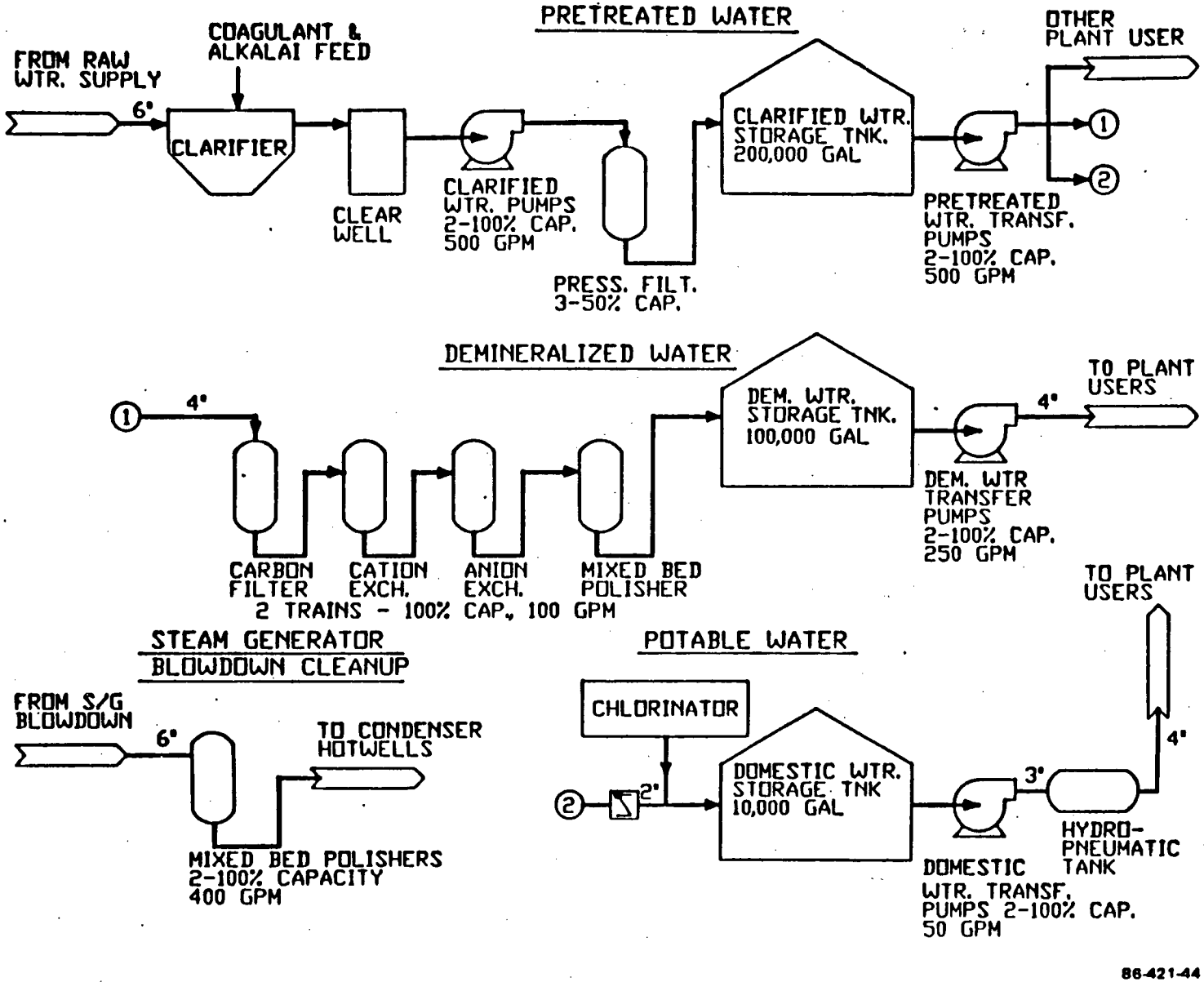

Figure 9.2–4 TREATED WATER SYSTEM FLOW DIAGRAM

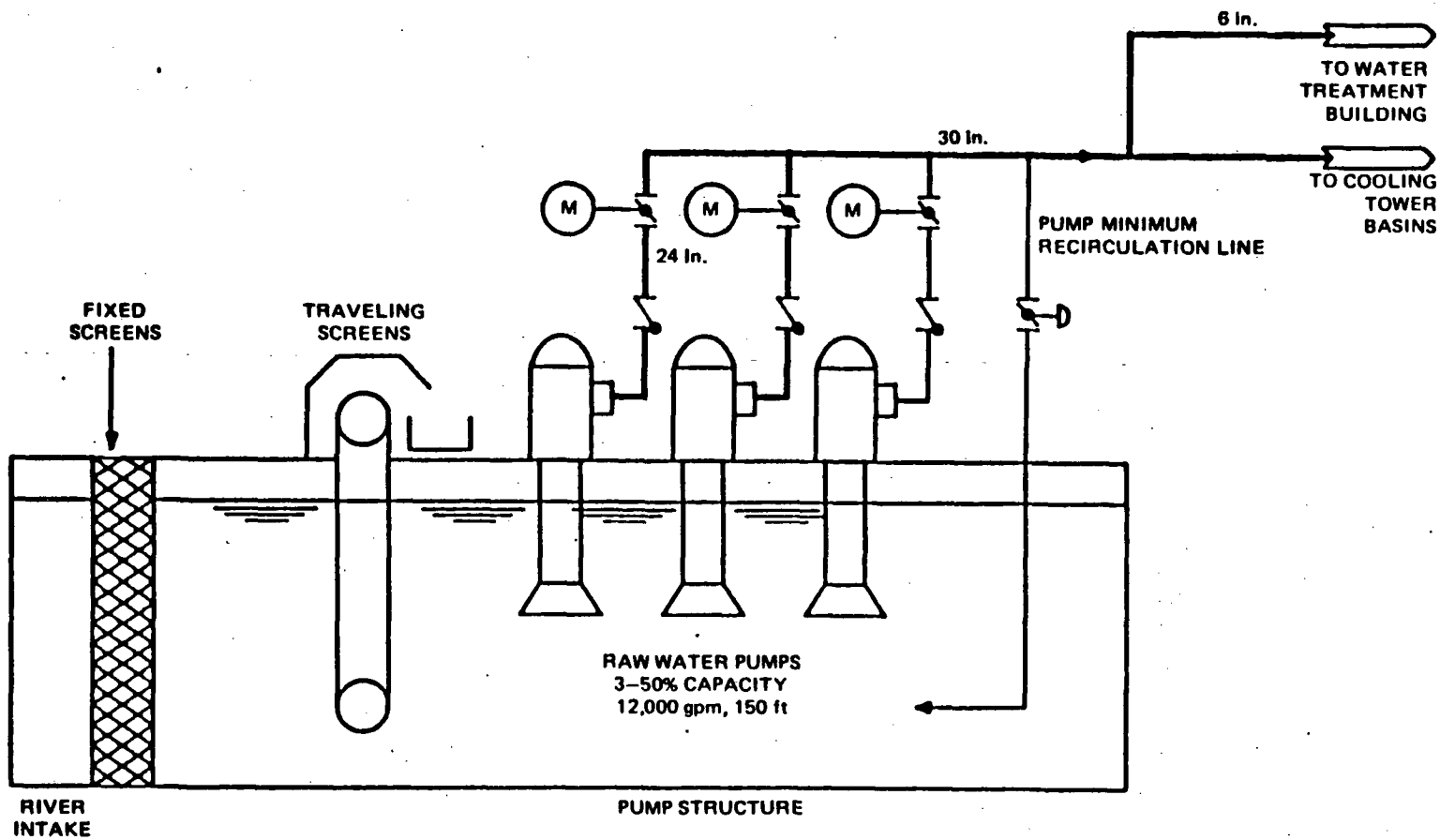

86-421-39

Figure 9.2–5 WATER SOURCE SYSTEM

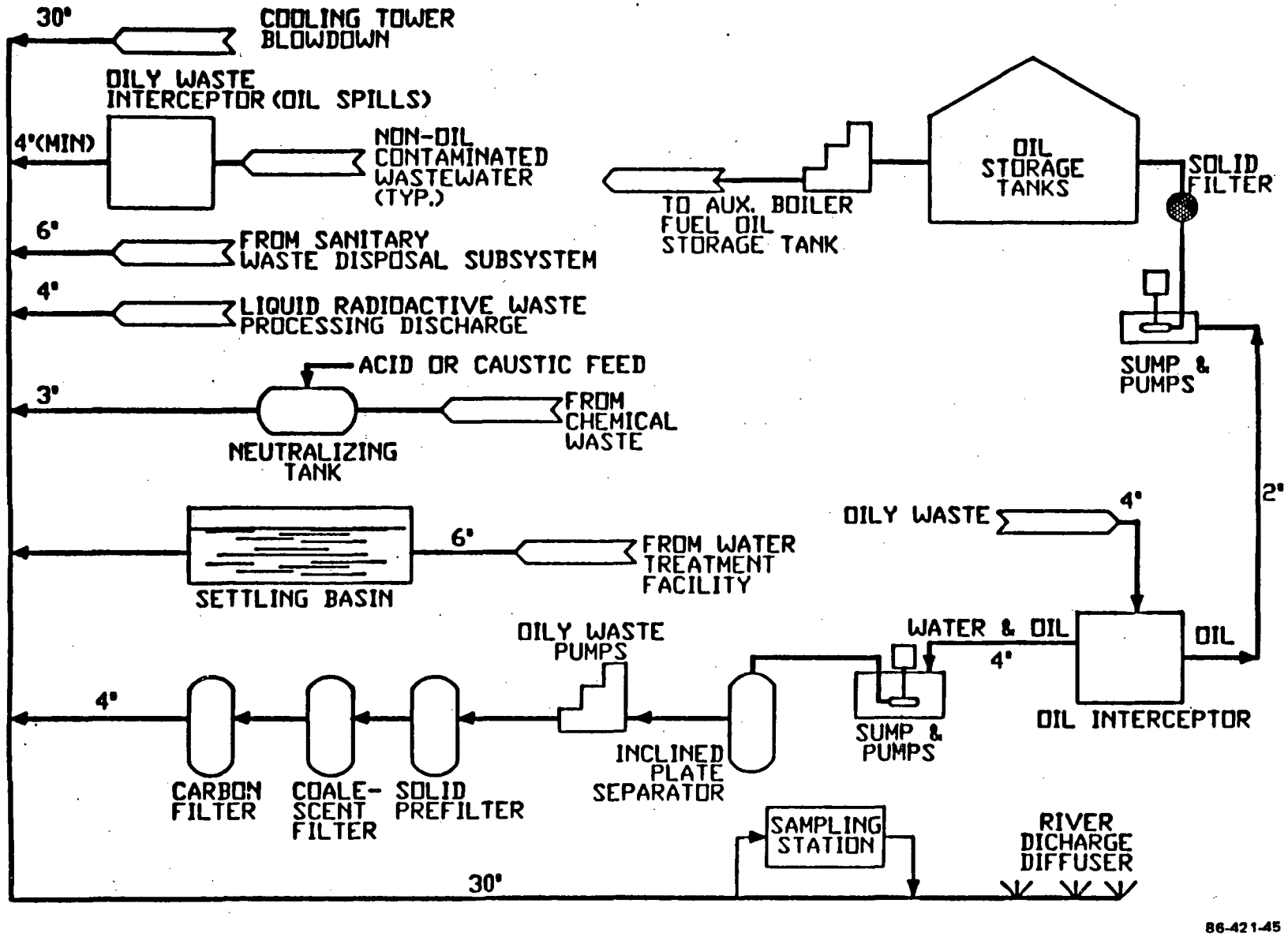

Figure 9.2–6 WASTE WATER COLLECTION, TREATMENT, AND DISPOSAL SYSTEM

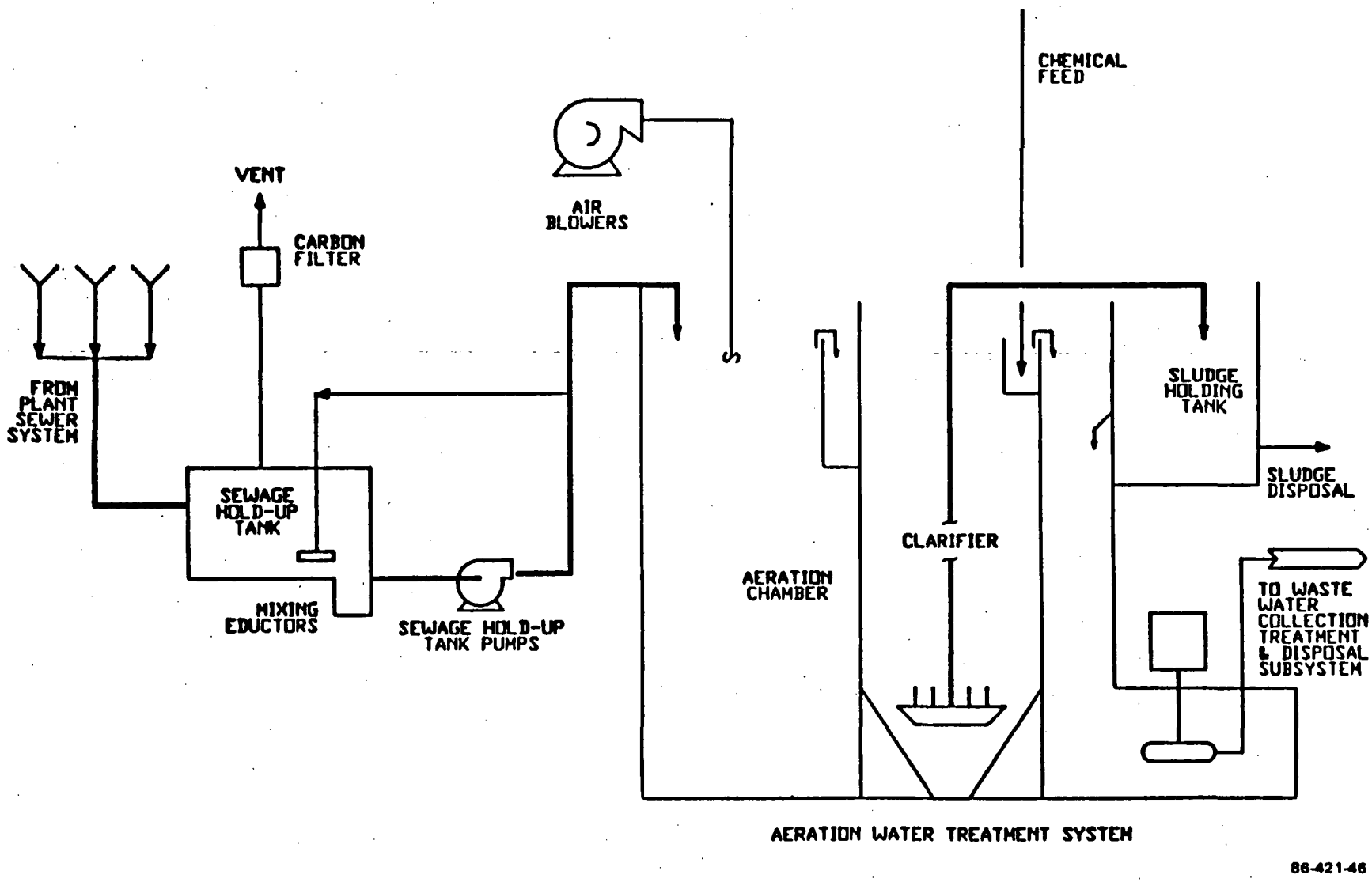

Figure 9.2–7 SANITARY WASTE DISPOSAL SUBSYSTEM

9.3

9.3 Process Auxiliaries

9.3.1 Inert Gas Receiving and Processing System (IGRPS)

9.3.1.1 Design Bases

9.3.1.1.1 Functions

The inert gas receiving and processing system (IGRPS) shall perform the following functions:

1. Receive, store, transfer, distribute and process inert gas used on site.
2. Provide helium cover gas for the Reactor System.
3. Provide helium atmosphere for the fuel receiving, storage and shipping system in the fuel cycle facility.
4. Provide argon cover gas for the intermediate heat transfer system (IHTS) loops and sodium dump tanks (SDT).
5. Provide a purge capability for use in conjunction with drain of the IHTS for maintenance purposes.
6. Provide a nitrogen purge capability for the sodium water reaction pressure relief subsystem (SWRPRS) and steam generator system following a steam generator design basis leak.
7. Provide vapor traps for all inert gases discharged from sodium systems.
8. Provide vacuum for sodium transfer and gas analysis purposes.

The inert gas receiving and processing system (IGRPS) consists of the following subsystems: 1) helium distribution subsystem, 2) argon distribution subsystem, and 3) nitrogen distribution subsystem. Specific Functional requirements for each subsystem are given below.

The functions of the Helium Distribution Subsystem are:

1. Provide evacuation and helium cover gas for the reactor.
2. Provide evacuation to purge the cover gas volume and to establish

the reactor cover gas pressure initially and after each refueling and/or maintenance operation.

3. Provide overpressure protection for the Reactor System when filling with helium.
4. Provide a safety class pressure boundary for those portions of the Helium Gas Distribution Subsystem that connect to the Reactor System.
5. Provide evacuation and helium cover gas for the Fuel Receiving, Storage, and Shipping System.
6. Provide evacuation and helium gas for the Fuel Transfer Cask of the Interim Transport System.
7. Provide evacuation and purge for the Primary Sodium Processing System and Primary Plugging Temperature Indicator.
8. Transfer all vented helium gas to the Gaseous Radwaste System.

The functions of the Argon Distribution Subsystem are:

1. Provide evacuation and argon cover gas for the Intermediate Heat Transport System loops and Sodium Dump tanks.
2. Provide argon for the IHTS sodium pump shaft seals and seal oil supply tanks. Control the flow rate to the pump seals at 0.5 scfm and provide flow indication and high-low flow alarms.
3. Provide valves and controls to isolate the argon flow to and from the IHTS cover gas and pump seal upon a high sodium level trip signal from the Plant Control System.
4. Provide valves and controls to isolate the IHTS cover gas upon an IHTS pump trip signal from Plant Control System.
5. Provide evacuation and argon cover gas for the primary sodium storage vessel.
6. Provide evacuation and argon purge gas for the Intermediate Sodium Processing System.
7. Provide evacuation and argon inerting to the space between the duplex rupture disks in the SWRPRS.
8. Provide evacuation and argon purge gas for the primary and intermediate sodium temperature plugging indicators.

9. Provide argon inerting for the reactor containment vessel annulus.
10. Provide evacuation for the hydrogen leak detectors.
11. Vent all non-radioactive argon gas through vapor traps and stacks to the atmosphere.

The functions of the nitrogen distribution subsystem are:

1. Provide nitrogen cover gas for the sodium/water reaction pressure relief subsystem (SWRPRS).
2. Provide nitrogen purge gas for the steam generator system and SWRPRS following a large SWR.
3. Provide nitrogen gas coolant for the primary sodium processing subsystem cold trap.
4. Provide nitrogen gas to the service stations of the nuclear island maintenance and inspection system.
5. Vent all non-radioactive nitrogen gas through stacks to the atmosphere.

9.3.1.1.2 Process Requirements

The design of the inert gas receiving and processing system shall be consistent with the following general requirements:

1. Provide a total on-site helium, argon and nitrogen storage capacity to satisfy design usage requirements for 15 days;
   a. Five gas cylinders, each cylinder containing two pounds of helium at 2,200 psig
   b. Two 1,500 gallons of liquid argon at 250 psig
   c. Two 3,000 gallons of liquid nitrogen at 325 psig
2. Provide separate distribution headers, with the necessary controls and instrumentation, to deliver gaseous helium, argon and nitrogen to the systems to be serviced.
3. Collect and transfer to the gaseous radwaste system all gases exhausted from the reactor system and all radioactive gas exhausted from the refueling system.

The nitrogen distribution subsystem shall be designed to meet the maximum flow capability of 50 scfm at 200 psig for the purge of a single steam generator for a minimum of ten hours following a sodium water reaction event.

Nitrogen at gas reduced in pressure in two steps, first to 50 psig then to 1 psig, shall be provided to SWRPRS for system purge and for maintaining low pressure inert atmosphere following a sodium water reaction event. The normal flow rate is zero; the emergency purge flow rate is 90 scfm.

Vapor traps shall be provided at the gas connections from all sodium system components to provide removal of sodium vapor from the discharged gas. Redundant vapor traps shall be provided on the Reactor and IHTS cover gas discharge. Argon and helium venting rates shall be specified which minimize sodium vapor entrainment. As a rule, venting rates should not exceed about 10 cfm.

Inert gases shall be stored principally as liquids at stations consisting of vaporizers and first-stage pressure-reducing valves.

Argon pressure shall provide the motivating force for transfer of incoming sodium from the sodium railroad tank cars and sodium drums to the IHTS. A temporary argon supply station or argon gas generator shall be provided at each sodium unloading point (one per power block) for this purpose.

The cover gases shall be dry and of low oxygen and other impurity content to prevent oxidation of sodium. The purity of each cover gas shall be as follows:

Argon:	99.996 % minimum (by volume)
Helium:	99.9945% minimum (by volume)
Nitrogen:	99.998 % minimum (by volume)

See Table 9.3-1 through Table 9.3-3 for more details.

Gas sample connections shall be provided to allow samples of incoming gases to be collected for analysis by Impurity Monitoring and Analysis System.

Gas sample points shall be provided at the cover gas of each sodium system or component to obtain inert gas samples prior to sodium fill and during plant operation.

Gas consumption shall be held to a minimum by using equalizing systems where possible, ensuring leak tight systems, and controlling seal purge rates to a minimum.

Redundant argon supply systems shall be provided for the IHTS cover gas system. The gas systems shall be designed to alarm on low supply header pressure and automatically change over when one supply source is exhausted.

The system shall be designed to prevent uncontrolled transfer of contaminants from low-purity to high-purity zones, and from high-radioactivity to low-radioactivity zones.

The inert gas storage capacity for each subsystem shall be such that if refill service is interrupted, the essential gas requirements can be supplied for a period of at least 15 days. Essential shall be defined as the minimum required to maintain the plant in an operating mode.

Plugging of lines and fouling of components by the condensation of sodium vapor from cover gases shall be prevented by trace heating of the lines, use of adequate line sizes, vertical orientation, and, where appropriate, provision of vapor traps and/or vapor condensers.

9.3.1.1.3 Structural Requirements

The inert gas receiving and processing system (IGRPS) components or subsystems which connect to other systems shall be designed for the environmental conditions, temperatures, pressure, duty cycle events and codes and standards compatible with the interfacing system which is served.

Piping and components which are connected to other piping and components which cannot be isolated by a normally closed or automatic closing valve, shall be designed and fabricated to the higher level code classification of the connecting components.

Piping between isolation valves shall be designed to the lower level code classification of the connected components. The isolation valve shall be designed to the code classification of the connected component.

Piping that penetrates the reactor containment shall be provided with double isolation valves. Piping between isolation valves shall meet ASME Section III Class 2 requirements.

Process vessels and piping that are non-safety-related shall be designed and fabricated to the requirements of the ASME B&PV Code, Section VIII, Division 1 and ANSI B31.1, respectively.

The IGRPS piping shall have full penetration butt welded connection to the interfacing sodium systems and at all joints up to and including the first stop valve. These joints shall be radiographed and surface examined by the dye penetrant method.

Piping whose code classification is not controlled by the interfacing system requirements shall be designed to ANSI Code B31.1.

The IGRPS safety related components, piping and associated controls and instrumentation are Seismic Category I and shall be capable of withstanding the effects of the Operating Basis Earthquake (OBE) without loss of capability to remain functional and to withstand the effects of the Safe Shutdown Earthquake (SSE) without loss of capability to perform their safety function.

One SSE, with 10 maximum peak response cycles shall be assumed to occur over the design life of the plant and shall be assumed to occur during the most adverse normal operation determined on a component and design limit basis. The SSE is an ASME Section III Level D event.

Five OBE's with 10 maximum peak response cycles each, shall be assumed to occur over the design life of the plant. Four OBE's shall be assumed to occur during the most adverse normal operation, and one during the most adverse upset operation determined on a component and design limit basis. The OBE's are ASME Section III Level B events.

The IGRPS non-safety related components, piping and associated controls and instrumentation shall be capable of withstanding the effects of the OBE without loss of ability to remain functional during and after such an event. The above horizontal and vertical OBE spectra may be applied as the design condition, or alternatively, the design may be performed in accordance with the Uniform Building Code (UBC) for a seismic zone III.

Construction materials for piping and components wetted by sodium or sodium vapor shall be Type 304 or 316 austenitic stainless steel or 2 1/4 Cr-1 Mo ferritic steel. Materials having equivalent corrosion resistance and mass transfer properties may be used in such areas as valve seats, bearings, or other areas requiring special materials due to mechanical functional requirements.

The thermal insulation materials shall be compatible with sodium at the maximum expected sodium temperature such that they do no add significantly to the potential reaction between sodium and air and the resulting reaction products shall not degrade the plant materials. Off-gas from the insulation shall be chemically non-reactive with other plant materials.

The IGRPS shall be designed for a service life of 60 years. Those items which cannot be expected to last the 60 year life shall be either redundant or easily replaceable so that the plant availability is not adversely affected.

The safety related IGRPS components shall be classified as Cleanliness Class C in accordance with ANSI N45.2.1, "Cleaning of Fluid Systems and Associated Components During the Construction Phase of Nuclear Power Plants."

The safety related IGRPS components shall be packaged, shipped, stored, and handled in accordance with ANSI N45.2.2, "Packaging, Shipping, Receiving, and Storage of Items for Nuclear Power Plants."

9.3.1.1.4 Configuration Design Requirements

Piping to sodium filled components shall be equipped with a check valve located near the header to prevent back flow from the system serviced.

Piping that contains sodium vapor shall be sloped to provide drainage of the condensed sodium back to the sodium source. Horizontal runs of piping shall be sloped a minimum of 1/8 inch/foot in both the hot and cold positions.

Control valves and pressure regulators, used in lines that provide continuous service or require low outage times, shall be provided with a bypass line that can maintain continuous gas service while the blocked-off control valve is being serviced.

A 10 micron particulate filter with differential pressure sensing instrumentation and high-differential pressure alarm shall be provided downstream of each gas supply source to protect components against particulate matter that might be introduced into the supply system.

At plant startup, large volumes of argon will be required to be supplied from tank trucks. Capped piping connections shall be provided in the IHTS argon supply systems for this service.

Isolation valves shall be provided between the IGRPS components or subsystems and the interfacing system which is served.

Piping connections to sodium systems shall be thermally insulated and traced heated over a pipe length which will minimize heat losses and cold spots in the interfacing system. Insulation shall be selected to provide a maximum insulation surface temperature no greater than 140°F.

Trace heating shall be provided to maintain connecting piping at a dry preheat temperature of 400°F and, when filled with sodium, at the normal operating temperature of the system to be serviced. The maximum heatup rate shall be 100°F/hr. Redundant trace heaters shall be provided wherever pipes or components are located in inaccessible areas.

Active components shall be located in areas normally accessible during plant power operation, if possible, or a redundant function or an operational option shall be provided such that failure of the component will not require reactor shutdown.

9.3.1.1.5 Design Safety Requirements

The main safety related functions of the IGRPS shall be to provide part of the pressure boundary for the liquid metal systems during reactor shutdown, and to control the radioactivity of gases released to the environment within regulatory limits (10CFR50, Appendix I).

9.3.1.1.6 Surveillance and In-Service Inspection Requirements

The IGRPS components or subsystem shall be design to satisfy in-service-inspection requirements that are compatible with the interfacing system which is served.

The system shall be designed to accommodate in-service inspection as required by Section XI, Division 3, ASME, B&PVC.

Safety related equipment shall be designed to provide indication of the inoperable status of portions of subsystems and auxiliary or supporting subsystems that must be operable for safety related functions.

Alarms shall be provided for indication of malfunctioning equipment and deviation from parameter operating limits.

9.3.1.1.7 Instrumentation and Controls

Process variables shall be within controlled prescribed operating ranges or envelopes. Means shall be provided for manually overriding the normal control loops in the event of off-normal conditions of pressure, temperature, gas analysis, or gas activity, including both venting and isolating of subsystems.

Process variables and positions of valves shall be monitored. Provide local annunciation of off-normal conditions. Provide annunciation and signals for the plant control system (PCS) annunciators in the event of abnormal system conditions.

The performance characteristics of the instrumentation and controls of each subsystem of the IGRPS shall be capable of being monitored or tested at all times, to indicate mal-operation and incipient failure of components or systems. Calibration requirements shall not interfere with normal operation of the plant.

Instrumentation and controls components which perform similar functions shall be commercially available and standardized, as practicable, to provide maximum interchangeability and flexibility, in order to simplify system maintenance. This requirement shall not preclude the use of new designs, where substantially improved performance with result therefrom.

Redundant instrument sensors, heaters, leak detectors, and other auxiliary items shall be provided where access to specific areas will be limited or prohibited by expected radiation levels and where specific design features may prohibit convenient access for maintenance.

9.3.1.2 System Description

9.3.1.2.1 Summary Description

The inert gas receiving and processing system (IGRPS) provides liquified and ambient gas supply storage, delivers inert gases of specified composition and purity at regulated flow rates and pressures to points of usage throughout the PRISM Plant, and accepts the contaminated gases through its vacuum and compressor facilities for storage and transfer to the gas radwaste system. Helium is supplied for reactor cover gas, reactor service building inert atmospheres, spent fuel shipping cask (SFSC) and fuel transfer cask (FTC) inerting, and ports and floor valves inerting. Argon gas is provided as cover gas for both the IHTS and the auxiliary sodium systems. Nitrogen gas is provided for cover gas for control and mitigation of sodium- water reactions and for use as a coolant in the primary sodium processing subsystem. Vacuum pumps, compressors, and vessels are used to transfer radioactive gas.

The IGRPS comprises three process subsystems. The subsystems and their functions are:

1. Helium distribution subsystem; distributes fresh and recycle helium for reactor cover gas, provides vacuum services and helium supply for the fuel handling cell (FHC) atmosphere, and monitors inerted FHC atmospheres for radioactivity and impurity level. Helium is also used for inerting SFSC, FTC, ports, and floor valves.

2. Argon distribution subsystem; principally distributes fresh argon to the cover gas spaces of the IHTS. Argon is also used as cover gas in auxiliary sodium systems and in the annulus of the reactor containment vessel.

3. Nitrogen distribution subsystem; principally distributes fresh nitrogen to inert and pressurize the steam generator (SG) and to purge the sodium water reaction pressure relief system (SWRPRS) following a sodium water reaction. Nitrogen is also used as an inert cooling gas for the primary sodium processing subsystem.

The IGRPS shall be available to support refueling operations as required with scheduled maintenance planned to accommodate the refueling.

Events in the interfacing systems may cause transient conditions in the IGRPS gas pressure, flow, or temperature parameters. These service demands are included in the interface requirements which are accommodated by the the IGRPS design. There are no interfacing or self-imposed upset event transients that exceed the IGRPS design conditions.

Each of the main process subsystems are described in the following sections. Each section consists of a subsystem description, performance characteristics, arrangement, component design description, physical interface description and instrumentation and control description.

9.3.1.2.2 Helium Gas Distribution Subsystem

The helium gas distribution subsystem is composed of helium gas storage tanks, pressure regulatory valves, stop valves, piping, gas bottles, filters, and relief systems. Three separate helium distribution systems are required for the plant and each is described below.

1. A portable, motor truck mounted, helium gas supply subsystem is provided for the reactor cover gas. The subsystem consists of helium supply, vacuum pump with receiver tank, vapor traps, helium compressor, helium storage tank, and necessary piping, valves, instrumentation and controls to complete the installation. This subsystem also receives recycled helium from gaseous radwaste and manages the flow and pressure control of the helium cover gas for the reactor. One system plus a backup system is provided for the plant.

2. Helium is supplied from gas cylinders to the fuel handling cell (FHC) in the fuel cycle building to maintain cell purity. Initial helium fill will be from helium tank trucks. Instrumentation and controls are provided to fill the cell with helium and to transfer radioactive helium from the cell to radwaste for clean-up. Sampling connections are provided in the feed line to allow sampling by Impurity Monitoring and Analysis System.

3. Helium gas bottles are provided for inerting the fuel transfer cask (FTC) spent fuel shipping canisters (SFSC) and for purging ports and floor valves. Necessary valves and piping for distribution of the gas to usage points are also provided.

9.3.1.2.2.1 Reactor Helium Distribution Subsystem

A portable, motor truck mounted, helium gas supply subsystem is provided to evacuate, purge and establish the reactor system cover gas prior to reactor startup and during refueling and maintenance. The subsystem consists of a helium supply, vacuum pump with receiver tank, vapor traps, helium compressor, helium storage tank, and the necessary piping, valves, instrumentation and controls to complete the installation. One system plus a backup system is provided for the plant. The P&ID for the system is shown in Figure 9.3-1. A sketch of the vehicle is shown in Figure 9.3-2.

The reactor cover gas subsystem is designed to handle the radioactive isotopes released from failure of ten fuel pins four days after reactor shutdown. The isotopes released from a single pin failure are given in Table 9.3-4 and the resulting reactivity after four days decay is given in Table 9.3-5.

The reactor vessel cover gas is at 875°F and a slight negative pressure at full power. The helium gas volume is 1160 Ft. The reactor is cooled to 400°F for refueling or maintenance and the sodium volume contracts with the reduced temperature to increase the cover gas volume to 1750 Ft and decrease the pressure to 6 psia. It is under these conditions that the reactor gas clean-up system is connected to the reactor vessel.

The reactor vessel cover gas parameters are given in Table 9.3-6 and the clean-up sequence to be used during refueling is outlined in Table 9.3-7.

The reactor cover gas subsystem vehicle is positioned outside of the reactor head access area and connected to the vapor trap outlet pipe which in turn connects to the reactor vessel. The reactor is shutdown and at 400°F refueling temperature and 6 psia pressure at this time. The pressure in the cover gas subsystem (vacuum) is slowly equalized with that in the reactor vessel (6 psia). The vacuum pump is started and the vessel pressure reduced from 6 psia to 0.1 psia at a rate of 10 cfm in about 500 minutes. The helium at the suction of the vacuum pump is cooled from 400°F to 100°F by the vapor trap. After about 5 minutes of vacuum pump operation the pressure in the receiver will increase to 18 psia at which time the 15 cfm air compressor will start and operate intermittently to maintain the receiver pressure in the 13-18 psia range. As the reactor vessel is evacuated the helium cover gas is stored in the 200 cubic foot storage/transfer tank at 35 psia and 100°F. About 4.6 pounds of helium are removed from the reactor vessel.

The vessel is then pressurized with fresh helium from cylinders (or with recycled helium from gas radwaste) to atmospheric pressure. About 11.2 pounds of helium are required. The primary sodium purification system is connected to the reactor vessel and the primary sodium cold trapped to 2 ppm or less oxygen. Reactor refueling is started.

The cover gas collected in the transfer tank is then taken on the vehicle to the radwaste system for tag gas recovery and analysis. The cover gas vehicle is then returned to and connected to the reactor module.

Prior to reactor startup, the reactor vessel is evacuated from atmospheric pressure to 6 psia (6.6 pounds of helium removed) using the vacuum pump and compressor. Evacuation takes about 100 minutes and results in a storage/transfer tank pressure of 84 psia at 100°F. Note that the storage/transfer tank and compressor are designed for 215 psia which provides a design capacity of 28.6 pounds of helium and allows several purges of the reactor vessel if necessary. After refueling, the cover gas collected in

the transfer tank is taken on the vehicle to the Radwaste System. The cover gas subsystem is evacuated into the gas radwaste collection tank. Since the refueling operation takes 15-20 days, all of the radioactive isotopes except Kr-85 will have decayed to essentially zero activity and the cover gas will only contain about 1.2 Ci of Kr-85.

9.3.1.2.2.2 Refueling Helium Subsystem

The interim transport system (ITS) in reactor refueling system transfers core assemblies and reactor components between the Reactor System and the fuel receiving storage and shipping system (FRSSS) which is located within the fuel cycle facility.. Helium and vacuum services are provided during refueling at the reactor module by the Reactor Cover Gas Processing Subsystem for inerting the reactor floor adaptor and the volume between isolation valves.

The reactor adapter is a transition spool 7 in. I.D. and 19 ft. long with isolation valves used to connect the refueling enclosure to the reactor vessel. The adapter, which has a volume of 7 cu ft is evacuated to 5 torr and back filled to atmospheric pressure three times prior to refueling. After refueling, the adapter purge is repeated prior to disconnecting the adapter from the reactor. In addition, the small volume (about .3 cu ft.) between the upper adapter isolation valve and the ITS isolation valve is evacuated and purged after each load of spent fuel is removed and after each connection for about 14 times per refueling. Purged gases are collected and transferred to gas radwaste by the reactor cover gas processing subsystem.

9.3.1.2.2.3 Fuel Receiving, Storage and Shipping Helium Subsystem

The fuel receiving, storage and shipping system (FRSSS) is located in the fuel storage and transfer building and includes the fuel handling cell (FHC) and the spent fuel shipping equipment. The FHC helium atmosphere is provided and maintained by the IGRPS. Entry ports to the cell for fuel transfer are equipped with gas locks which are purged and inerted by the IGRPS.

Equipment is also provided to evacuate and inert with helium the spent fuel casks prior to shipment and the fuel transfer cask prior to use for refueling. The IGRPS provides a helium gas supply and delivers helium at regulated flow rates/pressures for these services.

The fuel handling cell has a helium atmosphere and operates slightly below atmospheric pressure when transferring spent fuel, resulting in a slight air inleakage. The estimated volume of the cell is 150,000 cu ft. To minimize air inleakage, the FTC is maintained at atmospheric pressure (or slightly higher, up to ½ in. water) when spent fuel is not being handled. The moisture, but not the oxygen or nitrogen, in the incoming air is removed by the cell atmosphere HVAC unit. Normally, no fresh helium is required until the air level reaches the cell limit, approximately 1 to 2% by volume. At this point, fresh helium is purged through the cell to reduce the concentration to a level below this limit. The purge results in an "average" helium feed of less than 1 scfm based on an air leakage rate of 0.01 scfm. The FTC is vented to the gas radwaste system.

The P&ID for the reactor service building helium distribution subsystem is shown in Figure 9.3-3. A piping connection is provided for initial fill of the system by truck. During normal operation make-up, helium is supplied either by cylinders or by re-cycled helium from the gas radwaste. Cell pressure is measured and controlled by feed of make-up helium and purged to radwaste. A station is provided for sampling fresh helium by the impurity monitoring and analysis system.

The fuel transfer cask is connected to the fuel handling cell by a transition pipe spool with double isolation valves. The gas volume between these valves, estimated at 0.3 cu ft. is evacuated to 5 torr and purged with helium three times whenever the connection is made or broken. The IGRPS shall supply the helium and evacuation equipment required for this purge. Purged gas will be discharged to the gas radwaste system.

9.3.1.2.3 Argon Gas Distribution Subsystem

The argon gas distribution subsystem is composed of liquid argon supply tanks, pressure regulating valves, stop valves, piping, gas cylinders, filters, and relief systems. Four separate argon distribution systems are required for the plant. Three of these systems will be identical, one per reactor power block, and will be provided to service the intermediate heat transport system (IHTS) and the auxiliary liquid metal systems. The fourth distribution system will be provided to service the reactor system. The argon for IHTS is distributed to the SGBs for use as a cover gas in the IHTS, IHTS cold traps, and sodium-water reaction Pressure relief subsystem (SWRPRS) rupture disc areas. Auxiliary intermediate sodium systems are supplied with argon for system evacuation and backfill. The reactor containment vessel is supplied with argon for inerting. The primary sodium service vault is supplied with argon as cover gas for the sodium processing and sampling systems, and primary sodium storage vessel.

The liquid argon storage tanks are located in the same area as the liquid nitrogen storage, on a pad near the steam generator building. The vaporizers are located close to the tanks to minimize the length of the liquid argon lines. After vaporization the argon gas is reduced in pressure from 250 psig to 125 psig for distribution.

Argon gas distribution lines run in service pipeways along with the nitrogen distribution lines. Pipeways containing argon and nitrogen run from the argon vaporizers to the SGBs. The distribution piping in the SGB's is routed such that piping lengths are minimized, subject to the requirement that free space be provided for access and maintenance of the sodium components. Inside these buildings the argon supply and vent line locations are dictated by the vessel locations which they service.

9.3.1.2.3.1 Argon Storage

The argon for the IHTS is stored as a liquid in two, redundant gas generators on a pad near the steam generator building. The liquid argon is vaporized by heat transfer to ambient air as it is withdrawn. Argon gas is generated from one unit during normal use and a connection to the second unit provides a backup source of argon in case of low level or when the gas generator is being serviced. Two particulate filters in parallel are provided on the discharge of the gas generator. Level instrumentation that provides indication and low level alarm is provided. The discharge from the gas generator is maintained at 150 psig and has instrumentation that provides pressure indication with low/high alarm. Sample connections are provided to allow argon sampling by Impurity Monitoring and Analysis System before distribution in the IHTS steam generator buildings (SGB). The vaporized argon flows through branch lines which distribute the argon to the IHTS SGB.

9.3.1.2.3.2 Argon Gas Distribution - Steam Generator Buildings

The P&ID's in Figure 9.3-4 shows the argon distribution and vent piping for the various IHTS sodium components and piping in a typical SGB. A brief description follows.

Argon for the steam generator building (SGB) is stored, principally as liquid, in two dewars located on a pad near SGB. Remote controls and read-out instruments for services from this supply are located in SGB. The dewars are equipped with fill and vent lines; pressure relief valves are provided for the dewars and the fill lines. Each dewar is equipped with liquid-level instrumentation, providing both local and remote level indication as well as low-level signaling. When the on-line dewar reaches its low-liquid-level set point, a low-liquid-level signal via interlock circuitry transfers to the full standby dewar by automatically opening its supply line valve and closing the valve in the empty dewar supply line. Handswitches are provided for manually opening or closing supply valves from either dewar; these override the automatic controls. Supply valve open-closed status is provided for each dewar.

Two free-standing ambient air vaporizers for each dewar can evaporate the liquid argon at a maximum gas flow rate of 500 scfm at 200 psig. The vaporizers are protected from overpressure by the dewar pressure-relief valves.

Two particulate filters in parallel are provided in the header, with differential pressure sensing instrumentation and high- differential pressure alarm, to protect components served by the argon supply header against particulate matter that might be introduced into the supply system. Following the filter is a flow sensor with associated instrumentation to indicate process flow rate.

A 1 inch branch line supplies argon through a normally locked- closed manual valve and a pressure regulator to sodium receiving facilities at the SGB. The pressure regulator is set at 5 psig for sodium tank car unloading. Overpressure protection and vacuum pump connections are provided.

A branch line supplies argon to the Intermediate Sodium Sampler. The required pressure is maintained by a back pressure regulator.

The argon supply pressure is reduced by two series regulators. The lead regulator is set at 125 psig; the other is set 5 psi lower to provided smooth operation over the design flow rate range. A pressure sensor provides the signal for remote pressure indication and for high-low pressure alarm.

A branch line from the main header supplies argon through forward-pressure regulator for service station in SGB, at a maximum flow rate of 50 scfm.

The SGB header provides the argon gas services to IHTS and intermediate pump loops. The main header branches off to provide separate argon services to the intermediate loop. Trace heating of argon lines is provided adjacent to the components served.

A branch line from the loop header supplies argon at 2 psig, through to intermediate line vents, both venting to the outdoors and booster pump evacuation are provided.

A branch line from the loop header supplies argon manually regulated to any selected setting between 2 and 30 psig to inert the SWRPRS pipe rupture disc space. Evacuation (through a normally capped purge line) is provided for the rupture disc space.

Capped lines with provisions to connect argon from portable tanks are provided for leak detection units. This service requires infrequent supply of argon at 200 psig.

Fresh argon from the main supply line is provided to the intermediate sodium sampler. The effluent is vented through the vacuum pump.

A branch line from the loop header supplies argon to the intermediate pump seals. The flow rate is controlled at 0.5 scfm and the flow rate indicated and high-low alarmed. Argon flow to and from the pump is stopped automatically on high IHTS sodium level (from either pump or expansion tank). Remote open/close/auto switches are provided on this valve. Seal purge gas pressure is indicated by a pressure indicator.

A branch line from the loop supplies argon to intermediate pump oil supply tank. The pressure is regulated by manually adjustable feed-bleed valves. The tank pressure is indicated and high-low alarmed, and the alarm signal is provided to the plant control system.

The IHTS cover gas pressure is maintained at a nominal 15 psig by proportionally controlled feed valve and bleed valve. The cover gas pressure is sensed by pressure sensor and indicated. The 0 to 5 psig range provided by a pressure sensor is used during fill operations. During normal operation, a pressure sensor with a 0 to 30 psig pressure range provides the pressure signal to control the IHTS cover gas pressure.

The IHTS fresh argon supply system is sized to provide a maximum flow rate of 50 acfm (168 scfm) and the bleed system is sized to bleed at a maximum rate of 75 acfm (250 scfm) at 10 psid. The dewar supply system with a capacity of about 160,000 scf per dewar is capable of supplying the IHTS argon needs of 105,000 scf/month in addition to pump supply of 65,000 scf/month and other argon gas requirements for the SGB with adequate reserve capacity.

All argon lines at liquid-sodium-containing interfaces, up to a check valve for a feed line and up to a sodium "vapor" trap for a vent (or vent/feed) line, are insulated, heat traced, and temperature controlled (to a minimum of 240°F) to keep sodium aerosol or vapor from freezing during normal and transfer operations. These lines are also sloped toward the liquid sodium interfaces for condensate drainage (slope is about 1/2 inch per foot).

Vacuum pump evacuation capability is provided for each loop of the IHTS at the outlet side of the (redundant) vapor traps to support fill and drain operations.

The argon cover gas pressure in the IHTS loops will be limited to relief valve set pressure of 25 psig upon failure of the IGRPS components.

A branch line from the 125 psig header pressurizes the Sodium Dump Tank at a nominal pressure of 1 psig. Pressure regulating valve on the tank can be manually reset to higher values, and via handswitch, can select higher set points for operation of bleed valve. Pressure in the tank is indicated and high-low alarmed, and the pressure signal is provided to the Plant Control System.

Gas sampling connections are provided for sampling IHTS and RPST cover gas.

Sodium Expansion Tank/Pump Cover Gas

Argon for the IHTS is routed to the sodium expansion tank and intermediate sodium pump to provide the IHTS cover gas which is maintained at a nominal pressure of 15 psig. The cover gas pressure is maintained by a proportionally controlled feed and bleed valves from a pressure sensor signal. Argon flow to and from the IHTS cover gas is stopped automatically in response to a high sodium level signal. The argon supply requirement is estimated at 0.2 to 0.4 scfm during normal system operation. This supply system also provides argon for backfill during sodium fill and drain operations. The IHTS volume is estimated at 10,000 ft; and it is filled and purged at a rate of 10-20 cfm. Vacuum pump evacuation capability is provided for each IHTS loop at the outlet of the redundant vapor traps to support sodium fill and drain operations. Gas sampling connections are provided on the tank vent line for sampling the IHTS cover gas. Argon is vented from the IHTS through a stack to the atmosphere.

Intermediate Pump Seal Purge

Argon is routed to the intermediate sodium pump to provide 0.5 scfm of gas for pump seal purging and to the pump seal oil supply tank for cover gas. The flow rate to the pump seal is controlled and the flow rate indicated with high/low flow alarm. Argon flow to and from the seal is stopped automatically in response to a high sodium level signal. A controlled and measured rate of 0.25 cfm of the pump seal argon purge passes into the lower seal oil collection tank and flows through an oil trap before venting to the atmosphere. The flow measurement has high/low flow alarms. The seal oil supply tank is maintained at 50 psig and low/high pressure alarms are provided. Argon bleed from the supply tank combines with that from the collection tank for venting to the atmosphere. Note that the remainder of the pump seal argon, 0.25 cfm, passes into the pump cover gas and is eventually vented to the atmosphere through the IHTS cover gas control system.

Rupture Disk Purge

Argon is routed to the SWRPRS and IHTS expansion tank rupture disks and regulated to any selected setting between 2 and 30 psig to inert the space between the duplex rupture disks. A vacuum connection is provided to evacuate the space prior to filling with argon.

SWRPRS

Argon for the SWRPRS is routed to the sodium dump tank (SDT) to provide cover gas for any sodium heel in the tank and to inert the system. The tank is maintained at a nominal pressure of 6 inches of water at 400°F. The volume of the SWRPRS is estimated at 10,000 ft. and contains 1700 ft. of sodium in the SDT. The cover gas pressure is maintained by a proportionally controlled feed and bleed valves from a pressure sensor signal. Argon supply requirement is estimated at 1-2 SCFM during normal system operation to hold system pressure during temperature changes. About 20,000 SCFM of argon is required to fill the system. Evacuation and argon back fill of the SWRPRS, including the SDT, is accomplished by opening the valves to the IHTS and inerting the system simultaneously.

Sodium Receiving Station

Argon is routed to the sodium receiving station to provide cover gas and pressure to unload sodium railroad cars into the IHTS and reactor vessel through the auxiliary intermediate sodium system. This argon piping is temporary and will be removed after sodium unloading is completed. A cover gas pressure of 15 psig is maintained at the rail car by a back pressure controller. The argon supply requirement is estimated to be 5 scfm with a total consumption of 30,000 scf per power block. The cover gas pressure is controlled by a self-contained pressure regulator. Pressure indication is provided.

Argon will also be made available for intermittent unloading of sodium from 55 gal. drums as needed after the plant has been initially filled with sodium. The argon cylinders will be mounted on the sodium drum unloading vehicle and will furnish argon at 2 inches of water pressure to provide drum cover gas and argon at 30 psig to the sodium transfer tank for pressuring the molten sodium into the plant system. An oil bubbler with a guard tank provides over-pressure protection of the sodium drums. Argon cover gas requirement is estimated at 10 scf per drum and transfer requirement at 30 scfm per drum. The sodium transfer tank is evacuated to the atmosphere after each batch of sodium is transferred. The P&ID (Figure 9.3-5) shows the argon supply to the sodium drum station.

Auxiliary Intermediate Sodium System

Evacuation and argon backfill of the auxiliary intermediate sodium processing system prior to sodium fill is accomplished by opening the valves to the IHTS and inerting the systems simultaneously. There is no gas interface in this system.

Reactor Containment Vessel Annulus

Argon is provided to inert the annulus between the reactor vessel and the containment vessel. The containment vessel annulus is maintained at 15 psig. The volume of the annulus is estimated at 1500 cu ft. During normal operation the reactor system is sealed such that except for small argon sample specimen and leakage monitoring there is no transfer of argon gas across the primary or containment boundary. The P&ID (Figure 9.3-6) shows the reactor annulus argon supply.

Primary Sodium Storage Tank

The primary sodium storage tank is used to store the primary sodium in event it is removed from a reactor module for module replacement. There is one tank per plant and it is located in the primary sodium service building. Argon is provided to inert the vessel prior to sodium fill and to establish a 1 psig cover gas after sodium fill. A P&ID for the system is shown in Figure 9.3-7.

9.3.1.2.4 Nitrogen Gas Distribution Subsystem

Nitrogen is supplied to the steam generator to pressurize it with inert gas following a sodium water reaction and to the SWRPRS to purge the system of gaseous reaction products following a sodium water reaction. Nitrogen is provided to the primary sodium process subsystem to serve as an inert cooling gas for the primary cold trap. Nitrogen is also provided to service stations for maintenance operations.

The nitrogen gas distribution subsystem is composed of liquid nitrogen supply tanks, vaporizers, pressure control valves, stop valves, piping, filters, and relief systems.

The process flow diagrams for the nitrogen gas distribution subsystem is shown in Figure 9.3-8. A description of the subsystem is given below.

The nitrogen is stored as liquid in two, redundant gas generators on a pad near the steam generator building. The liquid nitrogen is vaporized by heat transfer to ambient air as it is withdrawn. Nitrogen gas is generated from one unit during normal use and a connection to the second unit provides a backup source of nitrogen in case of low level or when the generator is being serviced. Level instrumentation that provides indication and low level alarm is provided. The discharge from the generator is maintained at 235 psig and has instrumentation for pressure with low/ high alarm. Sample connections are provided to allow nitrogen sampling by the impurity monitoring and analysis system.

Two standard dewars with liquid nitrogen capacity of 3,000 gallons each are needed.

Replacement of used nitrogen occurs after one storage tank has been emptied, or on a schedule set by actual site delivery considerations. Storage capacity can be increased by adding dewar(s) if necessary because of delivery difficulties or greater than planned usage. As a minimum, enough nitrogen should be stored to meet requirements of sodium water reaction which is 80,000 scf.

The normal gaseous nitrogen supply passes through one of two particulate filters, and is distributed to the SGBs for steam generator purge and SWRPRS purge.

Nitrogen is also provided to the primary sodium processing subsystem from local cylinders to serve as an inert cooling gas for the primary cold trap. The system is maintained at slightly above atmospheric pressure by a self-contained pressure regulator. Pressure indication is provided.

9.3.1.2.4.1 Steam Generator Purge

Nitrogen is provided to maintain a minimum pressure of 200 psig in the water/steam side of the steam generator system following system blowdown to prevent sodium from entering the water side of the steam generator. A maximum of 50 SCFM will be delivered to the steam generator. For a large steam generator leak, the nitrogen pressure will decrease below 200 psig, indicating the gas is flowing out the SWRPRS. The estimated required flow is 50 scfm and the total usage per event is 30,000 scf. Instrumentation is provided to implement automatic purging of the steam generator from a trip signal from the plant control system based on decreasing steam generator pressure to 200 psig following sodium-water reaction.

The nitrogen subsystem is also used to inert the steam generator during initial startup, wet layup, hot standby and refueling operations.

9.3.1.2.4.2 SWRPRS Purge

Nitrogen gas is provided to the SWRPRS to purge the system of hydrogen and other sodium-water gaseous reaction products following a sodium-water reaction. The trip signal is provided by the plant control system. Nitrogen gas is reduced in pressure in two steps, first to 50 and then 0.5 psig. The initial high pressure purges the SWRPRS of reaction products (prevents an explosive mixture of hydrogen and air in the system) and the low pressure provides an inert atmosphere in the system. The purge rate is estimated to be 90 scfm and the usage 50,000 scfm per event.

Pressure to the SWRPRS is maintained by a self-contained pressure regulator. Pressure indication is provided. Instrumentation is also provided to implement automatic purging of the system.

9.3.1.2.4.3 Primary Sodium Processing Subsystem

Nitrogen is provided to the primary sodium processing subsystem to serve as an inert cooling gas for the primary cold trap. The coolant system is closed and has a volume estimated at 150 cubic feet. Nitrogen is supplied from a bank of two 225 scf cylinders. Pressure in the coolant system is maintained at slightly above atmospheric pressure by a self-contained pressure regulator. Pressure indication is provided.

9.3.1.2.4.4 Nitrogen Service Stations

The nitrogen subsystem is available for maintenance operations. Nitrogen with a maximum flow of 50 scfm is provided to the service stations. The service stations are expected to be used infrequently (once in 5-year intervals) and then only for short periods of time (4 to 8 hours) at the maximum flows.

9.3.1.2.5 Instrumentation and Control Description

The IGRPS instruments and controls provide the following capabilities:

1. Measurement of system parameters required for system surveillance, control and protection.

2. Signal conditioning to prepare signals obtained from sensors fcr use in the IGRPS control systems, the plant control system (PCS), annunciators, and the data handling and transmission system (DHTS).

3. Control of inert gas flow and remote operated control and isolation valves.

In general, sensors provided for monitoring the process are located on or in proximity to the pipes, vessel, and other equipment. The process variable is converted to an electrical signal at this location, and is transmitted to local instrument and control panels. These control panels contain instrument power supplies and equipment required for local alarm, indication, and control functions. Control panels are provided in the primary sodium service building, the steam generator building, the reactor service building, and the main control building.

9.3.1.2.5.1 Type of Sensors and Valve Instruments

Temperature

Surface-mounted, Type K, MgO-insulated, ungrounded thermocouples are used for measurement of temperatures in the IGRPS.

Pressure

A pressure gauge is used for local indication. For remote indication or control of pressure, pressure regulation valves or sensing elements coupled to appropriate electronic circuitry are used to provide standard electric signals proportional to pressure.

Flow

The types of volumetric flow sensing elements used include; turbine flowmeters, orifice plates and rotometers. The type of volumetric flow element that is used in each application is determined by the process conditions, i.e., pressure, flow rate, temperature, etc., at the point of measurement.

Valves

Valve instrumentation for manual and control valves is shown in the P&ID's (Figure 9.3-1 through Figure 9.3-7). Manual shut-off valves are either operated locally by a handwheel or remotely by a reach rod.

All control valves are driven by pneumatic operators. Automatically controlled valves and remotely set flow control valves are operated from automatic controllers and hand indicating controllers, respectively. Remotely operated valves are closed or opened by a remote handswitch. Pneumatic valve operators are supplied with instrument air. Safety Class 3 accumulators are provided by the compressed gas system for selected active valves that fail in place so that remote operation of these valves is possible for a period of 10 hours after loss of the air or nitrogen supply. The valve steam temperature of all sodium valves is monitored and is used to alert the operator if the temperature falls below a preset value, which would result in possible valve damage if the valve is operated. Sodium contact leak detectors are provided at the bellows of all sodium valves by the liquid metal leak detection system.

9.3.1.2.5.2 Controllers

Electronic controllers are used for automatic control of flow and temperature process variables. The controllers are capable of local or remote (cascade) setpoint operation. The controllers have a manual hand control which provides for "open loop," as well as automatic, operations of the actuator device. The controllers are designed to minimize process variable disturbances resulting from transfer operations.

Provisions for on-line maintenance, and simple disconnection from the system for repair or replacement, are provided. The process variable, setpoint, and controller output signals are displayed.

9.3.2 Impurity Monitoring and Analysis System

9.3.2.1 Design Bases

9.3.2.1.1 Functions

The impurity monitoring and analysis system shall perform the following functions:

1. Intermittently monitor the sodium impurity levels in the intermediate sodium systems during plant operation and alarm on abnormal plugging (saturation) temperatures.

2. Intermittently monitor sodium impurity levels in the primary sodium systems during refueling operation and alarm on abnormal plugging (saturation) temperatures.

3. Intermittently sample sodium in the intermediate sodium systems during all normal plant operating conditions and in the primary sodium system (reactor vessel) during refueling.

4. Collect, identify and analyze samples of sodium for chemical and radio-chemical analysis from all sodium systems.

5. Collect, identify and analyze samples of cover gas from a) the reactor vessel (helium), b) the primary sodium storage vessel (argon), c) the SWRPRS (argon/nitrogen), d) the fuel receiving, storage and shipping system (helium), e) the interim transport system (helium) and f) the IHTS (argon).

6. Collect, identify and analyze samples of incoming nitrogen, helium and argon.

7. Laboratory general equipment for the analysis of sodium and gas samples shall be provided by the balance of plant maintenance system. Specific laboratory equipment for impurity analysis shall be furnished by the impurity monitoring and analysis system. The chemical laboratory shall be located in the plant service building.

9.3.2.1.2 Process Requirements

The impurity monitoring and analysis system shall be designed to meet the following process requirements.

A primary sodium plugging temperature indicator (PTI) shall be provided for each reactor nuclear steam supply system (three PTI's per plant). These plugging indicators will interface with the primary sodium processing subsystem (auxiliary liquid metal system) and will be used during reactor refueling.

An intermediate sodium plugging temperature indicator shall be provided for each reactor module. These plugging indicators will interface with the intermediate sodium processing subsystem (auxiliary liquid metal system) and will be used during plant operation.

Suitable valves shall be provided in conjunction with the plugging temperature indicators so that monitoring and sampling can be performed independently from the cold trap operations.

A monitoring subsystem shall be provided to sample or monitor the impurity levels in the primary sodium systems (reactor system) during plant refueling operation. The monitoring subsystem shall be readily replaceable or be redundant.

Reactor cover gas sampling stations shall be provided to collect for analysis of a sample of the helium cover gas (reactor system) during reactor cold standby operation.

Gas sampling stations shall be provided to collect for analysis a sample of the IHTS argon cover gas monthly during plant operation.

Gas sampling stations shall be provided to collect for analysis a sample of the SWRPRS argon cover gas (intermediate heat transport system) monthly during plant operation.

A gas sampling station shall be provided to collect for analysis a sample of the primary sodium storage vessel (auxiliary liquid metal system) argon cover gas monthly during vessel operation.

A gas sampling station shall be provided to collect for analysis a sample of the helium atmosphere in the fuel handling cell monthly during system operation.

A gas sampling station shall be provided to collect for analysis a sample of the helium atmosphere in the interim transport system (reactor refueling system) after inerting.

Gas sampling stations shall be provided to collect for analysis a sample of incoming helium, nitrogen and argon gases.

Gas sample bottles and liquid metal samplers shall be provided by the impurity monitoring and analysis system.

Isolation valves shall be provided by the impurity monitoring and analysis system between the components or subsystem and the interfacing system to be serviced.

Sodium piping and equipment shall be insulated. Insulation shall be selected to provide a maximum insulation surface temperature not greater than 140°F at rated operation with an ambient temperature of 100°F.

Trace heating shall be provided to maintain sampling and monitoring components at a dry preheat temperature of 400°F and, when filled with sodium, at the normal operating temperature of the system to be serviced. The maximum heatup rate for sampling and monitoring components shall be 100°F/hr.

The impurity monitoring and analysis system piping and equipment shall have welded connections wherever such connections do not affect the proper operation and maintainability of the system. Temporary connections may be used at cover gas and sodium sampling ports.

The impurity monitoring and analysis system components or subsystems shall be designed to be drainable where practical to the interfacing system to be serviced. Horizontal runs of sodium piping shall be sloped a minimum of 1/8 inch per foot in both the hot and cold position.

9.3.2.1.3 Structural Requirements

The impurity monitoring and analysis system shall be designed to meet the following structural requirements.

9.3.2.1.3.1 Steady State Structural Requirements

The impurity monitoring and analysis system components or subsystems which connect to other systems shall be designed for the environmental conditions, temperature, pressure, duty cycle events, codes and standards compatible with interfacing system to be serviced.

A service life of 60 years shall be used as a basis for all components in the impurity monitoring and analysis system. Those items which cannot be expected to last the 60 year life of the plant shall be either sufficiently redundant or easily replaceable so that plant availability is not affected adversely.

Structural design shall provide for system fill under conditions of full vacuum with system components at an average temperature of 400°F and local hot spot temperatures of 600°F.

Establishment of the limiting values for design stress intensity shall include allowances for any known or predictable degradation of mechanical properties that may occur such as a result of irradiation, stress at service temperatures, and changes in material chemistry over the design life.

Penetrations, weld joints, and discontinuities shall exhibit smooth transitions to minimize stress concentrations. Welds shall be full penetration butt welds, located at low stress regions and shall be of a design which will permit radiography of all joints during fabrication.

The natural frequencies of all components shall be designed, where possible, to avoid resonance with all expected pump driving frequencies. Where this is not possible, the component design shall ensure that structural damage will not occur as a result of resonance.

All sodium or sodium vapor pressure boundary welds shall be surface examined by the dye penetrant method and shall be radiographed in accordance with the procedures and acceptance standards of the applicable Code.

All liquid metal components and/or assembled systems shall be subjected to a helium leak test in accordance with the procedures and acceptance standards of the applicable Code for component design and for pre-service inspection.

9.3.2.1.3.2 Transient Structural Requirements

The impurity monitoring and analysis system components and subsystems shall be designed to accommodate the transients resulting from abnormal conditions initiated within the subsystem and/or the system being serviced.

9.3.2.1.3.3 Natural Phenonena

The impurity monitoring and analysis system piping, components and associated controls and instrumentation shall be designed for seismic and other natural phenomena in accordance with the Uniform Building Code (UBC). The components shall be designed to remain operable following an Operating Basis Earthquake (OBE). The OBE response spectra are one half of the SSE values. Five OBE's, with 10 maximum peak response cycles each, shall be assumed to occur over the design life of the plant. Four OBE's shall be assumed to occur during the most adverse normal operation, and one during

the most adverse upset operation determined on a component and design limit basis. Systems or components containing radioactive material shall also be designed to remain operation after an SSE. One SSE, with 10 maximum peak response cycles shall be assumed to occur over the design life of the plant and shall be assumed to occur during the most adverse normal operation determined on a component and design limit basis

9.3.2.1.4 Configuration Design Requirements

The impurity monitoring and analysis system shall provide a sodium plugging temperature indicator for each intermediate sodium purification system (auxiliary liquid metal system); one per nuclear steam supply system. The plugging indicator shall interface with the auxiliary liquid metal system and shall include the necessary valves, blowers, heaters, piping, instrumentation and controls for a complete subsystem. The plugging indicator will be located in the steam generator building near grade level for ease of maintenance and replacement, and will be controlled from a local panel.

The impurity monitoring and analysis system shall provide a sodium plugging temperature indicator for each primary sodium purification system (auxiliary liquid metal system); one per each nuclear steam supply system. The plugging indicator shall interface with auxiliary liquid metal system and shall include the necessary valves, blowers, heaters, piping, shielding, instrumentation and controls for a complete system. The plugging indicator will be located below grade in the primary sodium equipment vault in the reactor building which is a tornado hardened, seismic Category I structure. The subsystem shall be controlled remotely from a local control panel.

The impurity monitoring and analysis system shall collect and analyze incoming sodium samples at the sodium tank car unloading station and the sodium drum unloading station provided by the sodium receive and transfer subsystem (auxiliary liquid metal system). The samples shall be taken

downstream of the particulate filter at a temperature of not greater than 300°F while the sodium is being unloaded. Sodium purity shall meet the requirements of Table 9.3-8.

The impurity monitoring and analysis system shall collect and analyze sodium samples from the reactor system and from the IHTS during plant operation. The reactor sodium sample stations will be located in the primary sodium equipment vault in the reactor building and interface with the primary sodium purification subsystem (auxiliary liquid metal system). The IHTS sodium sample stations will be located at and interface with the intermediate sodium purification subsystems (auxiliary liquid metal system).

9.3.2.1.5 Design Safety Requirements

The impurity monitoring and analysis system components handling radioactive materials shall be designed to function as safety-related systems and those components handling non-radioactive materials shall be designed to function as non-safety-related systems.

Radioactivity in the IHTS sodium shall be limited to 6×10^{-11} curies/cm^3 of sodium by neutron shielding and reactor system arrangement. This sodium activity corresponds to a piping surface dose rate of 0.2 MRem/hr.

Structures supporting sodium-containing equipment shall be designed such that damage resulting from the design basis sodium fire will not result in failure or collapse of the supports for the sodium-containing equipment.

No single failure shall permit the contamination of sodium by halogenated inorganics or organics, mercury or water.

The subsystems shall be designed to limit radioaction exposure to the plant personnel to less than 20 man Rem year from anticipated operational exposure.

9.3.2.1.6 Instrumentation and Control

Process instrumentation and controls shall be provided for the intermediate and primary plugging temperature indicators to monitor and control the subsystems during all normal and off-normal operating conditions. Instrumentation and control tolerances shall be such that structural design limits of components and piping are not exceeded. The pre-heater controls shall regulate heater input without introducing damaging thermal stresses.

Redundant instrument sensors, heaters, leak detectors, and other auxiliary items shall be provided where access to specific areas will be limited or prohibited by expected radiation levels and where specific design features may prohibit convenient access for maintenance.

Instrumentation shall be designed for in-place verification of instrumentation with minimum disturbance.

9.3.2.2 System Description

The impurity monitoring and analysis system provides sampling, monitoring and analysis of the plant sodium systems and the plant nitrogen, helium and argon gas systems in the plant, and acceptance sampling and analysis of incoming sodium, argon, helium and nitrogen. Impurities in the sodium coolant, reactor cover gas and intermediate sodium system argon are monitored to aid the reactor operator in maintaining proper sodium and cover gas purity levels and to provide information on potential degradation of components. Impurities in the coolant cover gas can indicate the presence of leaks, tube failure or other off-standard conditions. Table 9.3-9 provides a list of the sampling and monitoring stations throughout the plant and gives the locations, number and type of equipment at each station.

9.3.2.2.1 Primary Sodium Monitoring

The primary sodium monitoring subsystem consists of a plugging temperature indicator (PTI) connected to the primary sodium processing subsystem (PSPS) in the auxiliary liquid metal system. Flow through the PTI is provided by the PSPS sodium EM pump. There is one PTI for each power block and it is used to monitor the primary sodium purity when the sodium in any of the three reactor modules in the power block is being cold trapped. This occurs during initial sodium fill and during refueling, that is, when the reactor is shutdown. Only one reactor module is serviced at a time. Interlocks are provided on the reactor vessel isolation valves to prevent inadvertent cross flow of sodium between reactor modules. A schematic diagram of the subsystem is shown in Figure 9.3-9. The major advantages of the PTI are its simplicity, it is responsive to the general purity of the sodium and it provides a rapid and reliable indications of the coolant quality.

The PTI is a device for determining the impurity saturation temperature of sodium, which indicates the soluble impurity concentration. A schematic diagram of the PTI is shown in Figure 9.3-10 and the P&ID in Figure 9.3-11. The PTI cools the sodium as it flows through an orifice plate, which is the coolest point in the device, and reheats the sodium as it is returned to the system. As the impurities in the sodium are cooled below their respective saturation temperatures, nucleation and precipitation of the impurities occur, resulting in a flow decrease through the orifice plate. The temperature of the sodium at the time of the first sustained flow decrease is referred to as the plugging temperature. When the orifice plate is reheated, the flow increases as the impurity plug is dissolved. The saturation temperature is calculated from a series of plugging and unplugging temperature.

The oxygen solubility at refueling temperature (400°F) is 12 ppm; at higher concentrations sodium oxide will precipitate. The system cold trap is operated during initial sodium fill and refueling to bring the concentration to about 2 ppm oxygen which corresponds to a 300°F oxygen saturation temperature.

9.3.2.2.2 Intermediate Sodium Monitoring

The intermediate sodium monitoring subsystem consists of a plugging temperature indicator (PTI) connected to the intermediate sodium processing system (ISPS) in the auxiliary liquid metal system. Flow through the PTI is provided by the ISPS sodium EM pump. There is one PTI for each reactor module and it is used to monitor the intermediate sodium purity during IHTS operation. A schematic diagram of the ISPS with the plugging temperature indicator is shown in Figure 9.3-12. The P&ID for the intermediate sodium PTI is shown in Figure 9.3-13. The intermediate sodium PTI is similar to that used for the primary sodium except that it operates at a lower temperature, is manually controlled and does not required radiation shielding.

9.3.2.2.3 Primary Sodium Sampling

A primary sodium sample station is provided for each power block and is connected to the primary sodium purification subsystem (PSPS). A schematic of a primary sodium sampling station is shown in Figure 9.3-14. Sodium samples are obtained using the by-pass sampling method and will be analyzed primarily for oxygen and hydrogen. The locations of the sampler piping connections are shown on the PHTS plugging indicator P&ID in Figure 9.3-11. Sodium samples can be taken from either of the three reactor modules in the power block during sodium fill, hot stand-by or refueling conditions. The primary sodium sample stations are located in the primary sodium equipment vaults in the reactor building. Sodium flow to the station is provided by the PSPS sodium EM pump. A half inch line from the pump discharge directs flow to the station. Return flow is directed into the reactor hot leg pool by a half inch line. Remote operated double isolation valves are provided on both the inlet and outlet lines to the station. The sample station is located in a shielded glove box which provides an inerted nitrogen atmosphere. The inert atmosphere minimizes oxidiation of the exposed sodium during change out of the sample vessel, isolates the operator from direct contact with the radioactive system and provides an inert enclosure in case of a sodium leak from a sample tube mechanical connection. The cell is equipped with a shielded window and a transfer port for sample removal.

After sample vessel installation and leak checking, the sample vessel and connecting pipe are heated to the temperatue of the system to be sampled at a rate of 100°F/Hr or less. Heat is applied progressively from the sample vessel to the valves at each end and down the connecting pipe to thaw out the solid sodium in the connecting lines. Sodium flow is then established by opening the outlet and then the inlet valves to vent the small amount of helium gas into the reactor system. A sodium flow rate of about 0.1 gpm is maintained for about 24 hours to wet and equilibrate the sample vessel with the system sodium. The outlet valve is then closed and the sample and sodium in the connecting lines are allowed to freeze as quickly as possible. After the sodium-24 in the sample has been allowed to decay for approximately two weeks, the sample vessel is removed, the ends capped and vessel delivered to the chemical analysis laboratory.

9.3.2.2.4 Intermediate Sodium Sampling

An intermediate sodium sample station is provided for each IHTS and is connected to the intermediate sodium processing subsystem (ISPS). Sodium samples can be taken during all operating conditions of the ISPS. Sodium samples are obtained using the by-pass sampling method and will be analyzed primarily for oxygen and hydrogen. A by-pass sodium sample will be collected in a vessel which, through extended exposure to flowing sodium, has been cleaned and equilibrated isothermally with the bulk sodium.

The sample station consists of a sample vessel, inlet and outlet lines with double manual isolation sodium valves and a helium connection for leak checking. The station is similar to that used for sampling primary sodium (See Section 9.3.2.2.3) except that shielding and remote operation is not be required.

9.3.2.2.5 Fresh Gas Sample Stations

Gas sample stations are provided throughout the plant for sampling incoming nitrogen, helium and argon. Portable gas sample bottle assemblies are provided for containment and transportation of samples to the

laboratory. The gas supplier shall sample and analysis each lot of gas and shall furnish the purchaser with a copy of the results of the analysis and a document certifying that the purity of each lot meets the requirements specified. Upon receipt of each lot of gas, the purchaser will sample and analyze each lot in accordance with the procedures specified below to establish that the requirements have been meet. Non compliance with purity requirements, as determined by the purchaser's analyses, shall be cause for rejection of the lot.

9.3.2.2.5.1 Fresh Helium Sampling

Helium is furnished in compressed gas cylinders for used as reactor cover gas (reactor system) and for an inert atmosphere in the fuel handling cell and refueling equipment (reactor refueling system). The sample bottle shall be attached directly to the cylinder pressure regulator/gage. The sample cylinder shall be flushed with at least fifty volumes of gas prior to collecting a sample.

9.3.2.2.5.2 Fresh Argon and Nitrogen Sampling

Argon and nitrogen shall normally be furnished as a cryogenic liquid in gas generators for use as a cover gas and purge gas in the intermediate heat transport system, auxiliary liquid metal system, the reactor containment vessel (reactor system) and steam generator system. The samples for analysis shall be taken with a cryogenic sampler meeting the specifications in MIL-S-27626 and designated TTU-131/E, or with an equivalent sampler. The sampling procedure of MIL-S-27626 shall be followed. In the event argon or nitrogen are furnished as a compressed gas, the sampling procedure given in Section 9.3.2.2.5.1 for helium shall be followed. Impurities to be monitored and analyzed are oxygen, hydrogen, carbon monoxide, carbon dioxide, hydrocarbons and water.

9.3.2.2.6 Reactor Cover Gas-Helium Sampling

Although the reactor is designed to operate as a hermetically sealed system and is only opened every two years for refueling, there is a remote possibility that air in-leakage may occur and result in a high primary sodium oxygen concentration (10 ppm or greater). As a result, capability is provided to periodically sample the cover gas during reactor operation at cold stand-by conditions between refueling intervals. Gas samples are only taken during periods of reactor shutdown. The cover gas samples will be analyzed for nitrogen to detect gross air in-leakage to the reactor system. In addition, the radioactivity of the cover gas is continously monitored by the Reactor Instrumentation System during reactor operation.

The cover gas sample is obtained using a grab sampler connected to a one inch diameter nozzle on the reactor vessel top head and is located in the head access area (reactor system). A sketch of the sample station is shown in Figure 9.3-15. The station consists of a shielded, thermally insulated, trace-heated structure which houses the double block valves on the line from the reactor nozzle and the gas sampler. The removable sampler consists of an evacuated 150 cc sample bottle with a 1/4 inch inlet manual valve. The sampler is connected to the reactor vessel nozzle by a 1 inch union fitting. A purge line with a 1/4 inch manual valve connects to an external helium cylinder and a vacuum source and is used to remove air and radioactive products from the volume between the sample valve and the top reactor isolation valve.

In operation, the evacuated sampler is connected to the sample station with the union fitting and the access port to the station closed. The air in the volume between the 1/4 inch sample valve and the one inch reactor isolation valve is removed by evacuating to 0.1 psia and backfilling with helium to 15 psia four times. The sample station is then heated to 400°F and the volume again evacuated. The two reactor isolation valves are opened to fill the sample bottle and the 1/4 inch sample bottle isolation valve is then closed. A measured volume of three cubic feet of helium gas is then passed through the purge line into the reactor vessel and the two reactor vessel isolation valves are then closed. The sample station is

then allowed to cool to ambient temperature and the gas sample allowed to decay for two weeeks before being removed and taken to the laboratory for analysis. A blind end cap is used as a backup closure when the station is not in use. A similar end cap is attached to the sampler inlet before removal from the enclosure.

9.3.2.2.7 Fuel Handling Cell - Helium Sampling

The Fuel Receiving, Storage and Shipping System (FRSSS) is located in the Fuel Cycle Facility and includes the Fuel Handling Cell (FHC). The FHC helium atmosphere is provided and maintained by the Inert Gas Receiving and Processing System. When handling spent fuel, the FHC is maintained slightly below atmospheric pressure to minimize air in leakage. The moisture from air in-leakage, but not the oxygen or the nitrogen, is remove by the cell HVAC unit. When the air level reaches the cell limit, approximately 1 to 2% by volume, fresh helium is purged through the cell to reduce the concentration to a level below this limit. The FHC is purged to the Radwaste System. Gas sample stations are provided for sampling the fresh helium and the spent helium by the Impurity Monitoring and Analysis System. Fresh helium is sampled and analyized for identification and purity. Spent helium is sampled and analyzied for oxygen and nitrogen.

9.3.2.2.8 Spent Fuel Transfer Cask

The Inert Gas Receiving and Processing System shall supply the helium and evacuation equipment required for purging and back filling the cask. A gas sample station is provided by the Impurity Monitoring and Analysis System for sampling the fresh helium used and for checking the purity of the gas after cask filling.

9.3.2.2.9 IHTS Cover Gas-Argon Sampling

The Intermediate Heat Transport System cover gas is sampled from a station downstream of the vapor trap on the argon discharge line of the IHTS Expansion Tank which is located in the Steam Generator Building. Impurities in the argon cover gas can indicate the presence of system leaks

or other off-standard conditions. Argon impurities to be monitored and analyzed include helium, hydrogen, oxygen, nitrogen, methane and carbon monoxide. Samples are obtained in a 150 cc stainless steel sample cylinder. After installation of the sample cylinder, the IHTS cover gas pressure is cycled approximately 1 psi to flush the sample station and obtain a representative gas sample. A schematic diagram of an IHTS cover gas sample station is shown in Figure 9.3-16. Samples obtained are delivered to the Chemical Analysis Laboratory.

9.3.2.2.10 SWRPRS Cover Gas-Argon/Nitrogen Sampling

The Sodium Water Reaction Pressure Relief Subsystem (SWRPRS) cover gas will be sampled from a station downstream of the vapor trap on the argon discharge line of the Sodium Dump Tank (SDT) which is located in the Steam Generator Building. The SWRPRS cover gas is normally argon; however, in the event of a sodium-water reaction, nitrogen is used to purge the system. Impurities in the cover gas indicate the presents of system leaks or other off-standard conditions. Impurities to be monitored and analyzed include helium, hydrogen, oxygen, nitrogen, methane and carbon monoxide. Samples will be obtained in a 150 cc stainless steel sample cylinder. After installation of the sample cylinder, the SWRPRS cover pressure will be cycled approximately 1 psi to flush the sample station and obtain a representative gas sample. A schematic diagram of a SWRPRS cover gas sample station is shown in Figure 9.3-16. Samples obtained are delivered to the Chemical Analysis Laboratory for analysis.

9.3.2.2.11 Reactor Guard Vessel-Argon Sampling

The reactor containment vessel is inerted with argon gas and operates as a hermetically sealed system. A gas sample station is provided to check the vessel atmosphere for oxygen and nitrogen during initial fill and periodically during operation. Presence of these impurities would indicate air leakage into the vessel. The gas sample station is similar to that shown in Figure 9.3-15.

9.3.2.2.12 Chemical Analysis Laboratory

Sodium and gas samples collected by the impurity monitoring and analysis system will be analyzed in a laboratory located in the plant service building. The general laboratory equipment for analysis of sodium and gas samples will be provided by the balance of plant maintenance system. Specific laboratory equipment for analysis of sodium and gas samples shall be furnished by the impurity monitoring and analysis system. A list of this equipment is given in Table 9.3-10.

Sodium impurities to be analyzed by the impurity monitoring and analysis system shall include: 1) all elements (excluding oxygen and hydrogen) whose concentration is greater than 1% in major materials in contact with the sodium, 2) carbon, 3) elements that constitute the major metallic and non-metallic constituents of any cleaning or etching solutions which have been used, 4) major elements (excluding oxygen, hydrogen and carbon) in sealants and lubricants which have been used, 5) elements (except transuranides) in sodium produced by activation or fission, 6) oxygen, 7) hydrogen, and 8) particulate matter. In addition, primary sodium systems shall be analyzed for uranium, plutonium and lithium.

Cover gas impurities to be analyzed by the impurity monitoring and analysis system include helium, hydrogen, oxygen, nitrogen, methane and carbon monoxide. Incoming cover and purge gas (nitrogen, argon and helium) are to be analyzed for oxygen, hydrogen, nitrogen, carbon monoxide, carbon dioxide, hydrocarbon gases and water.

9.3.2.2.13 Instruments and Controls

9.3.2.2.13.1 Plugging Temperature Indicator

The P&ID's for the primary sodium and intermediate sodium plugging temperature indicators are shown in Figures 9.3-11 and 9.3-13. The PTI's are essentially the same except that the primary unit is designed for higher temperature operation and for remote operation and is shielded. Each unit is equipped with inlet, outlet and by-pass valves. The sodium

flow rate through the units is measured by a permenent magnetic flowmeter with remote and local read-out, high/low flow alarms and an inter-lock which shuts off the blower motor on low flow. The plugging temperature is measured, recorded and provided with a high temperature alarm. The plug clearing device is remote actuated by a solenoid coil. The air blower and air inlet damper are equipped with remote controls.

9.3.2.2.13.2 Valves

All sodium-containing and cover gas valves are provided with a leak detection device and annunication (visual and audible) by the liquid metal leak detection system and limit switches which provide open-close signals to indicators on the respective panels.

9.3.3 Compressed Air Systems

The compressed air systems consist of the service air system and the instrument air system.

9.3.3.1 Design Bases

9.3.3.1.1 Functions

9.3.3.1.1.1 Service Air System

The functions of the service air system are to supply air for maintenance systems, unloading devices, tools, miscellaneous cleaning and inspection services. In addition, this system supplies compressed air to the instrument air system.

9.3.3.1.1.2 Instrument Air System

The instrument air system supplies filtered, oil free, dry air at the required pressures and quantities to instrumentation, controls, pneumatic pistons and diaphragm valve operators, and airlocks located in all areas of the plant.

9.3.3.1.2 Design Requirements

9.3.3.1.2.1 Service Air System

The service air system shall provide compressed air as required during normal plant operation or during plant shutdown when compressed air is required for maintenance activities. In addition, this system shall:

1. Provide plant total compressed air flow requirement of 800 scfm
2. Provide air with minimum pressure of 100 psig at the service air pressure reducing stations
3. Automatically maintain system header pressure at 125 psig

9.3.3.1.2.2 Instrument Air System

The instrument air system shall provide dry compressed air as required during normal plant operation or plant shutdown when instrument air is required for supporting systems and maintenance activities. In addition, this system shall:

1. Provide dry compressed air to all air operated instruments and controls of the plant
2. Supply a total plant flow requirement of 400 scfm of air to the instrument air header
3. Filter air to remove particles three microns or larger
4. Dry compressed air to a dewpoint of -40°F at 100 psig
5. Provide air with minimum pressures of 80 psig at instrument air pressure reducer filters

9.3.3.2 System Description

The compressed air systems consist of three reciprocating air compressors, complete with intake filter-silencers, intercoolers, aftercoolers, an air receiver, prefilters, driers, afterfilters, and interconnecting piping and valves to distribute the compressed air to the users. A simplified flow diagram of these systems is presented in Figure 9.3-17.

Compressed air for the instrument air system is supplied from the service air system through an air drier (with a prefilter and post-filter), associated piping, valves, and instrumentation.

The compressed air systems operate at all times to provide compressed air as required during normal plant operation or when the plant is shut down since compressed air is required for instruments, controls, systems, and maintenance during plant shutdown as well as during normal plant operation. Normally, one air compressor is in operation, one compressor is on operating standby, and the third compressor is kept as a spare or on standby for large load swings. The third compressor shall be used during maintenance downtime of the operating or standby compressor. The operating and backup compressors are rotated into service on a scheduled basis.

The air compressors take suction at the intake filter-silencer from the atmosphere. The air is compressed and flows through the aftercoolers and moisture separators to the air receiver. The air receiver has a sufficient storage capacity to level out the uneven flow caused by the reciprocating action of the compressors and provides storage capacity for limited air supply on loss of power. Cooling water for the air compressors and aftercoolers is supplied from the turbine plant component cooling water system.

From the air receiver, the compressed air flows through a pressure control station which maintains the system pressure at 125 psig. Compressed air is then directed to a loop header in the BOP area and to a loop header around the NI portion of the plant. The service air then is distributed from these loop headers to individual headers throughout the plant and from these headers to specific users and individual valve stations. An isolation valve isolates the service air system from the instrument air system to preserve the supply of instrument air whenever the compressed air header pressure falls.

The instrument air flows through a mechanical dual type prefilter. The prefilter removes dust, dirt, pipe scale, and other foreign particles from the inlet air to the air drier located downstream. A refrigerant type

air drier is provided to dry the air to a moisture content equivalent to a -40°F dewpoint at 100 psig. The air from the air drier passes through a mechanical dual type afterfilter where any particles entrained from the driers are retained.

Instrument air from the discharge of the afterfilters is distributed to a loop header in the turbine generator building, and to a loop header around the NI portion of the plant. The instrument air then is distributed from these loop headers to individual headers throughout the plant, and from these headers to specific plant components. System pressure is maintained at 100 psig by pressure control stations.

Table 9.3-1

COVER GAS PURITY REQUIREMENTS*

The purity of each cover gas as received shall be as follows:

Argon: 99.996% minimum (by volume)
Helium: 99.9945% miniumum (by volume)

The level of purity specified for each gas represents the difference between 100% and the concentration of the impurities specified below.
The impurities in the cover gas as received shall not exceed the limits listed in this tabulation.

Cover Gas Impurity Limits

Impurity	Limit (ppm, Volume)	
	Argon	Helium
Water**	6	6
Oxygen	5	5
Hydrogen	2	2
Nitrogen	15	15
Carbon dioxide	1	1
Carbon monoxide	1	1
Hydrocarbon gases (as methane)	5	5
Krypton	0.3	0.3
Xenon	0.02	0.02
Neon	6	20

*Equivalent to RDT Standard M14-1T

**This specification for water is waived for cryogenic liquid provided the liquid is filtered through a nominal 10 micron filter during filling and transferring from the shipping container. The filter shall be installed so that frost around the connections is prevented from entering the tank.

Table 9.3-2

FUEL HANDLING CELL*

SUPPLIED HELIUM PURITY REQUIREMENTS

The purity of the helium gas supplied to the fuel handling cell shall be as follows:

Cover Gas Impurity Limits

Impurity	Limit Volume, ppm
Water**	6
Oxygen	8
Hydrogen	2
Hydrocarbon gases (as methane)	5
Nitrogen	15
Carbon dioxide	1
Carbon monoxide	1
Krypton	0.3
Xenon	0.02
Neon	20

*Impurity limits were established based on limits of commercial grade helium.

**This specification for water is waived for cryogenic liquid helium provided the liquid is filtered through a nominal 10 micron filter during filling and transferring from the shipping container. The filter shall be installed so that frost around the connections is prevented from entering the tank.

Table 9.3-3

FUEL HANDLING CELL HELIUM PURITY LIMITS

Prior to opening the fuel handling cell to the Interim Transport System, the atmosphere shall be purged to maintain the following impurity limits:

Impurity	Limit Volume, ppm
Water	9
Oxygen	12
Hydrogen	3
Hydrocarbon gases (as methane)	8
Nitrogen	15
Neon	20

Table 9.3-4

REACTOR COVER GAS ACTIVITY - ONE PIN FAILURE

ISOTOPE	ACTIVITY Ci	HALF LIFE	WEIGHT GM MOLES	VOLUME CC @ 100°F
Kr-85m	4.21 E+02	4.4 hrs	5.87 E-07	1.50 E-02
Kr-85	1.20 E+01	10.8 yr	3.60 E-04	9.19 E+00
Kr-87	6.97 E+02	76 mins	2.80 E-07	7.15 E-03
Kr-88	9.63 E+02	2.8 hrs	8.53 E-07	2.18 E-02
Kr-89	1.03 E+03	3.2 mins	1.75 E-08	4.47 E-04
Xe-133	4.67 E+03	5.3 days	1.90 E-04	4.85 E+00
Xe-135m	1.04 E+03	15.6 mins	8.58 E-08	2.19 E-03
Xe-135	5.24 E+03	9.1 hrs	1.51 E-05	3.86 E-01
Xe-137	4.17 E+03	3.9 mins	8.58 E-08	2.19 E-03
Xe-138	3.42 E+03	17.5 mins	3.17 E-07	8.09 E-03
	2.17 E+04		5.67 E+04	1.45 E+01

Table 9.3-5

REACTOR COVER GAS ACTIVITY
AFTER FOUR DAYS DECAY - ONE PIN FAILURE

ISOTOPE	ACTIVITY AFTER FOUR DAYS DECAY, Ci	WEIGHT GM MOLES
Kr-85m	0	0
Kr-85	11.99	3.60 E-04
Kr-87	0	0
Kr-88	0	0
Kr-89	0	0
Xe-133	2,768.09	1.13 E-04
Xe-135m	0	0
Xe-135	3.49	1.01E-08
Xe-137	0	0
Xe-138	0	0
TOTAL	2,783.57	4.73 E-04

Table 9.3-6

REACTOR VESSEL COVER GAS VOLUME

REACTOR VESSEL DIAMETER:	18'-6"
NORMAL OPERATING CONDITIONS:	
Temperature, °F	875
Pressure, psia	14.5
Freeboard	4'-4"
Gas Volume, Cu Ft	1160
Gas Weight, lb	4.6
REFUELING CONDITIONS:*	
Temperature, F	400
Pressure, psia	6
Freeboard	6'-6"
Gas Volume, Cu Ft	1750
Gas Weight, lb	4.6

*Prior to Cover Gas Processing

Table 9.3-7

REACTOR VESSEL COVER GAS CLEAN UP SEQUENCE

- Connect the cover gas clean up subsystem to the reactor vessel
- Evacuate the reactor vessel to the storage/transfer tank
- Pressurize the reactor vessel to atmospheric pressure with clean helium
- Connect the sodium purification system and start cold trapping
- Disconnect cover gas cleanup subsystem from reactor vessel
- Transfer cover gas to radwaste for tag gas recovery and analysis
- Return vehicle to reactor module and re-connect cover gas system
- Refuel and seal reactor vessel
- Cold trap to 2 PPM oxygen and disconnect sodium purification system
- Evacuate the reactor cover gas to 6 psia
- Disconnect the cover gas clean up subsystem from the reactor vessel
- Transfer the cover gas to radwaste system

Table 9.3-8

PURCHASED SODIUM PURITY REQUIREMENTS

Sodium intended for use in the reactor primary or intermediate coolant system shall have an overall purity (Na + K) of 99.90% and meet the maximum impurity limits given below.

Element	Limits (ppm) Maximum
B	25
Ca	10
C	30
Cl	30
Li	5
K	1000
S	10
U	0.01

Table 9.3-9

IMPURITY MONITORING AND ANALYSIS SYSTEM

SUMMARY OF STATIONS

Function	Location	Number	Equipment
Primary Sodium Monitoring	Primary Sodium Service Building	One Per NSSS	Plugging Indicator
Intermediate Sodium Monitoring	Steam Generator Building	One Per NSSS	Plugging Indicator
Primary Sodium Sampling	Primary Sodium Service Building	One Per NSSS	Hot Cell W/ Na Sampler
Intermediate Sodium Sampling	Steam Generator Building	One Per NSSS	Na-Sampler
Incoming Sodium Sampling	Sodium Unloading Station	One Per NSSS	Na-Core Sampler
Incoming Helium Sampling	Reactor Cover Gas Vehicle	Two Per Plant	Gas Sampler
Incoming Helium Sampling	Fuel Handling Cell-Service Building	One Per Plant	Gas Sampler
Incoming Helium Sampling	Spent Fuel Transfer Cast-Service Building	One Per Plant	Gas Sampler
Incoming Argon Sampling	Outside Steam Generator Building	One Per NSSS	Gas Sampler
Incoming Nitrogen Sampling	Outside Steam Generator Building	One Per NSSS	Gas Sampler
Reactor Cover Gas-Helium Sampling	Reactor System-Head Access Area	One Per Plant	Gas Sampler
Helium Atmosphere Sampling	Fuel Handling Cell-Service Building	One Per Plant	Gas Sampler
IHTS Cover Gas-Argon Sampling	IHTS Expansion Tank-Steam Generator Building	One Per NSSS	Gas Sampler
SDT Cover Gas-Argon /Nitrogen Sampling	SDT-Steam Generator Building	One Per NSSS	Gas Sampler
Reactor Containment Vessel-Argon Sampling	Reactor System-Containment Vessel	One Per NSSS	Gas Sampler

Table 9.3-10

CHEMICAL ANALYSIS LABORATORY EQUIPMENT LIST

- Glove Box - inert atmosphere
- Moisture Analyzer
- Hydrocarbon Analyzer
- Gas chromatograph
- Mass Spectrometer
- Scintillation Counter
- Sodium Distillation Apparatus

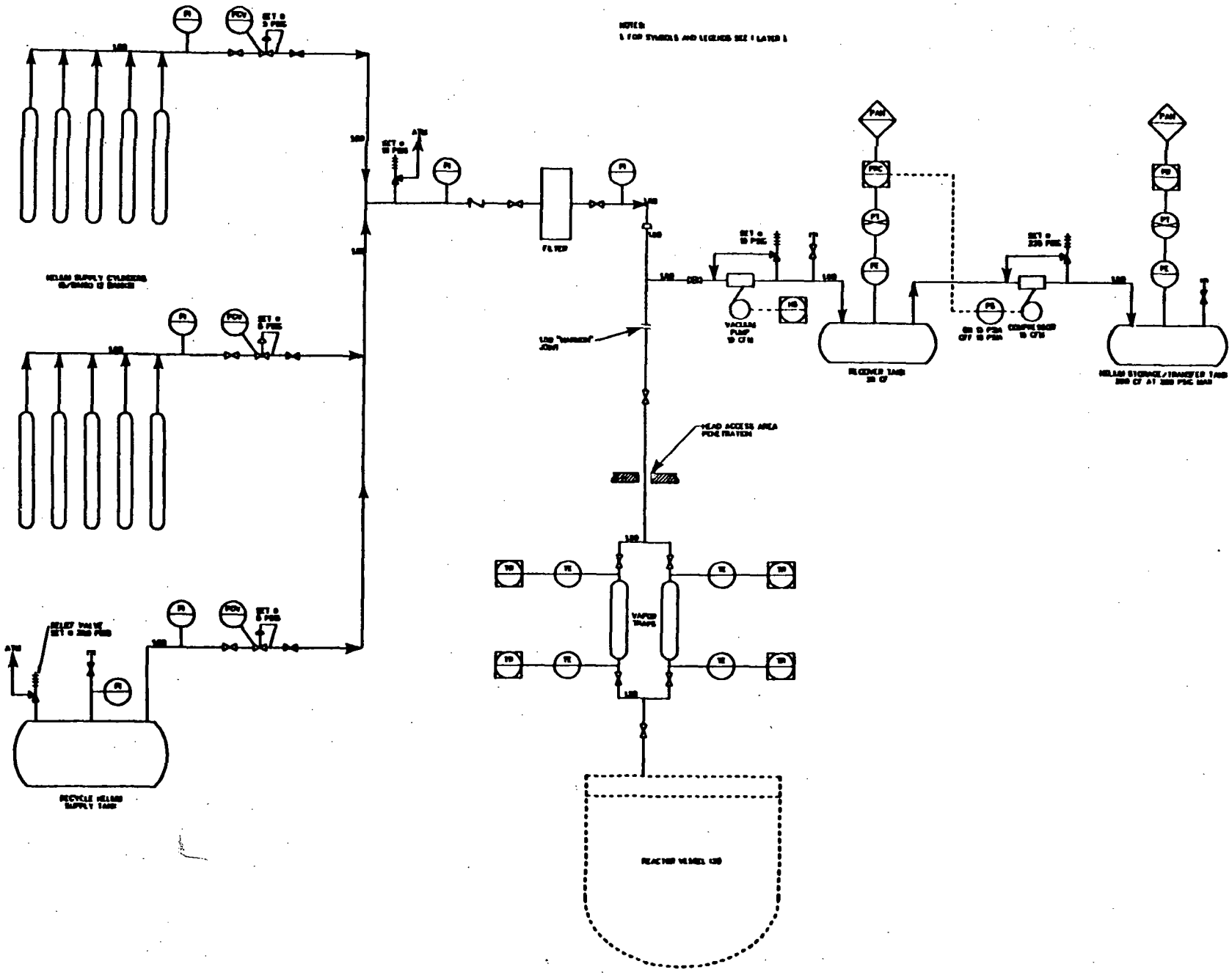

Figure 9.3–1 REACTOR COVER GAS CLEANUP SUBSYSTEM

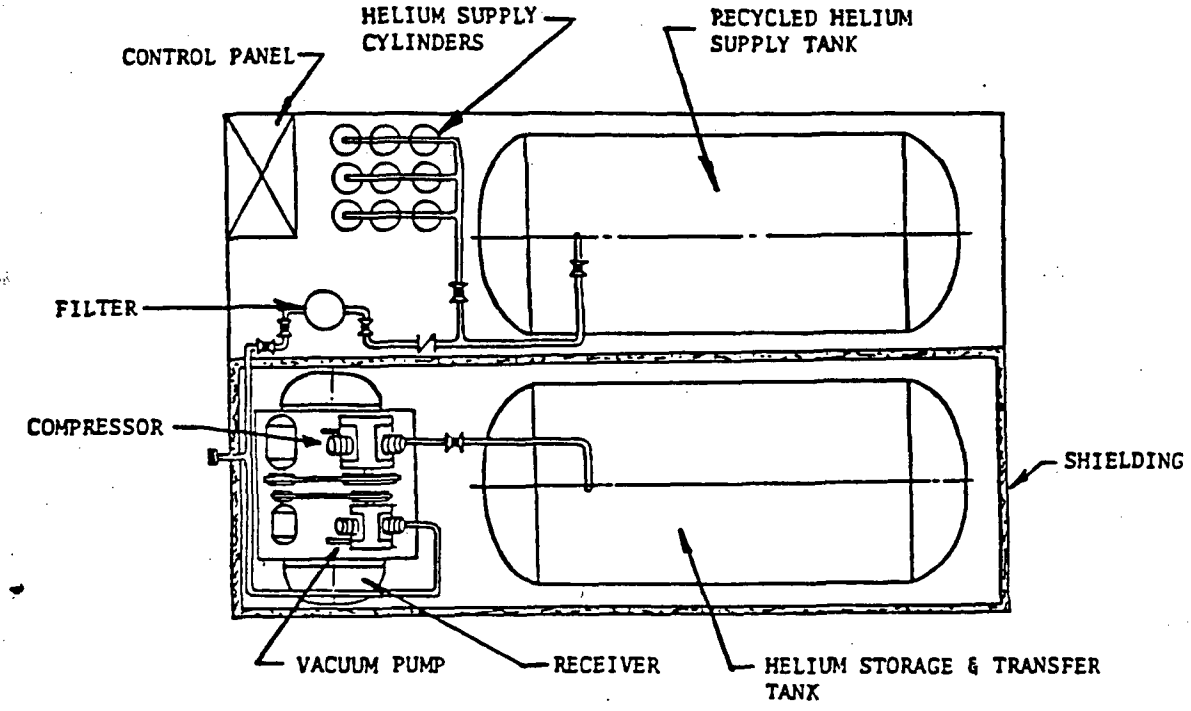

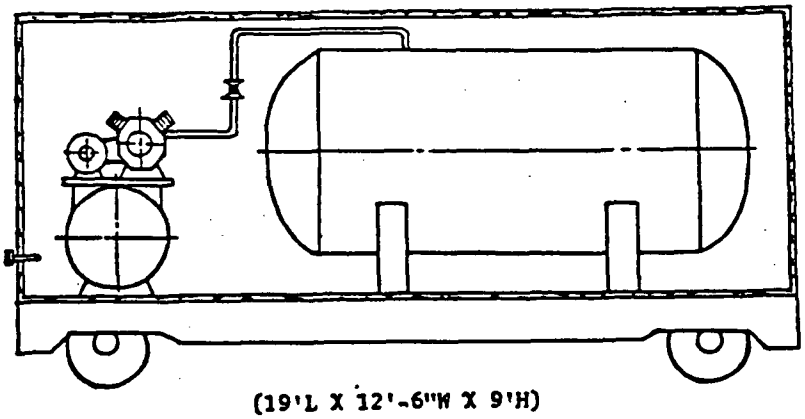

(19'L X 12'-6"W X 9'H)

REACTOR COVER GAS VEHICLE

86-421-47

Figure 9.3–2 REACTOR COVER GAS VEHICLE

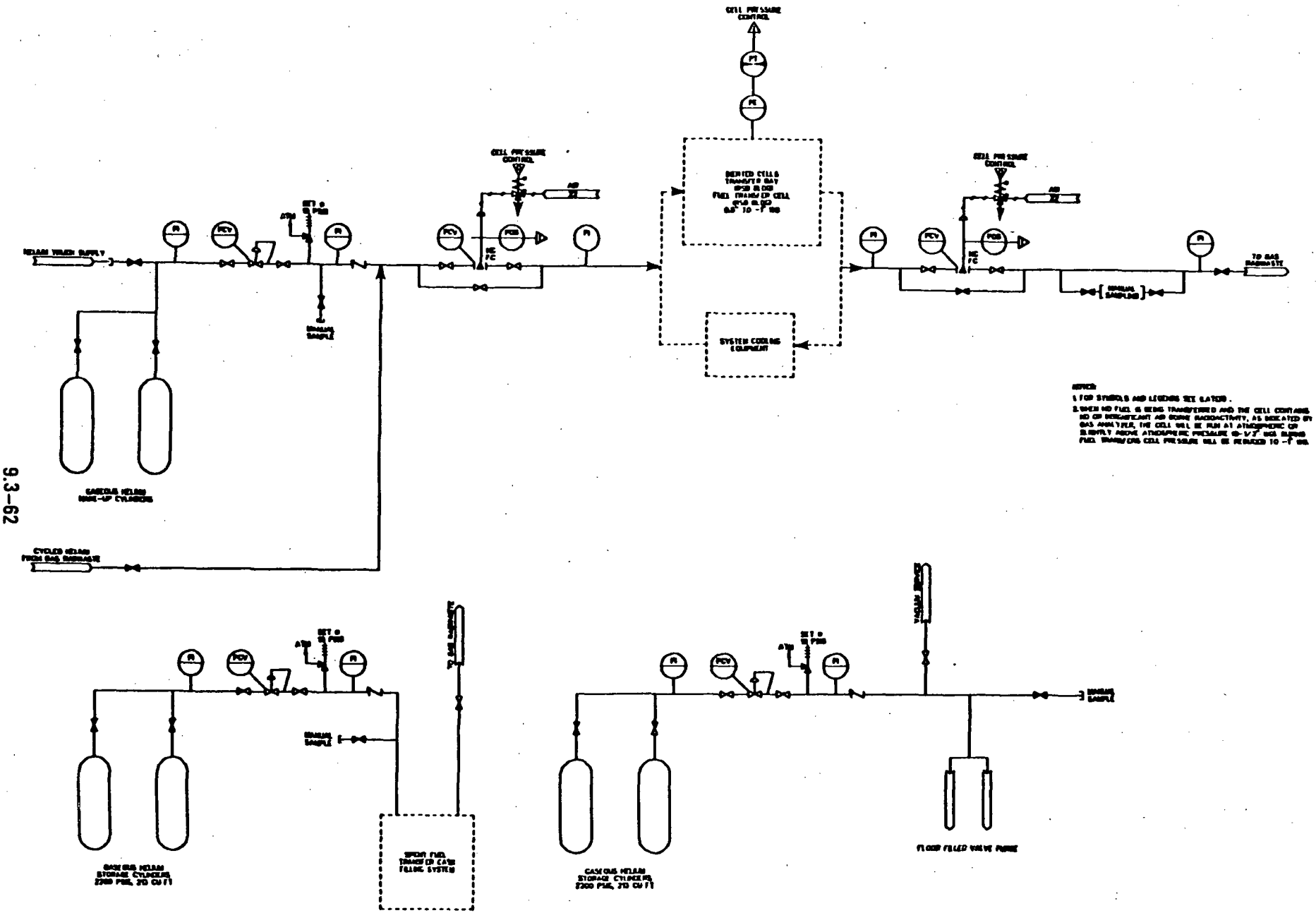

Figure 9.3–3 HELIUM STORAGE AND DISTRIBUTION – REFUELING SYSTEM

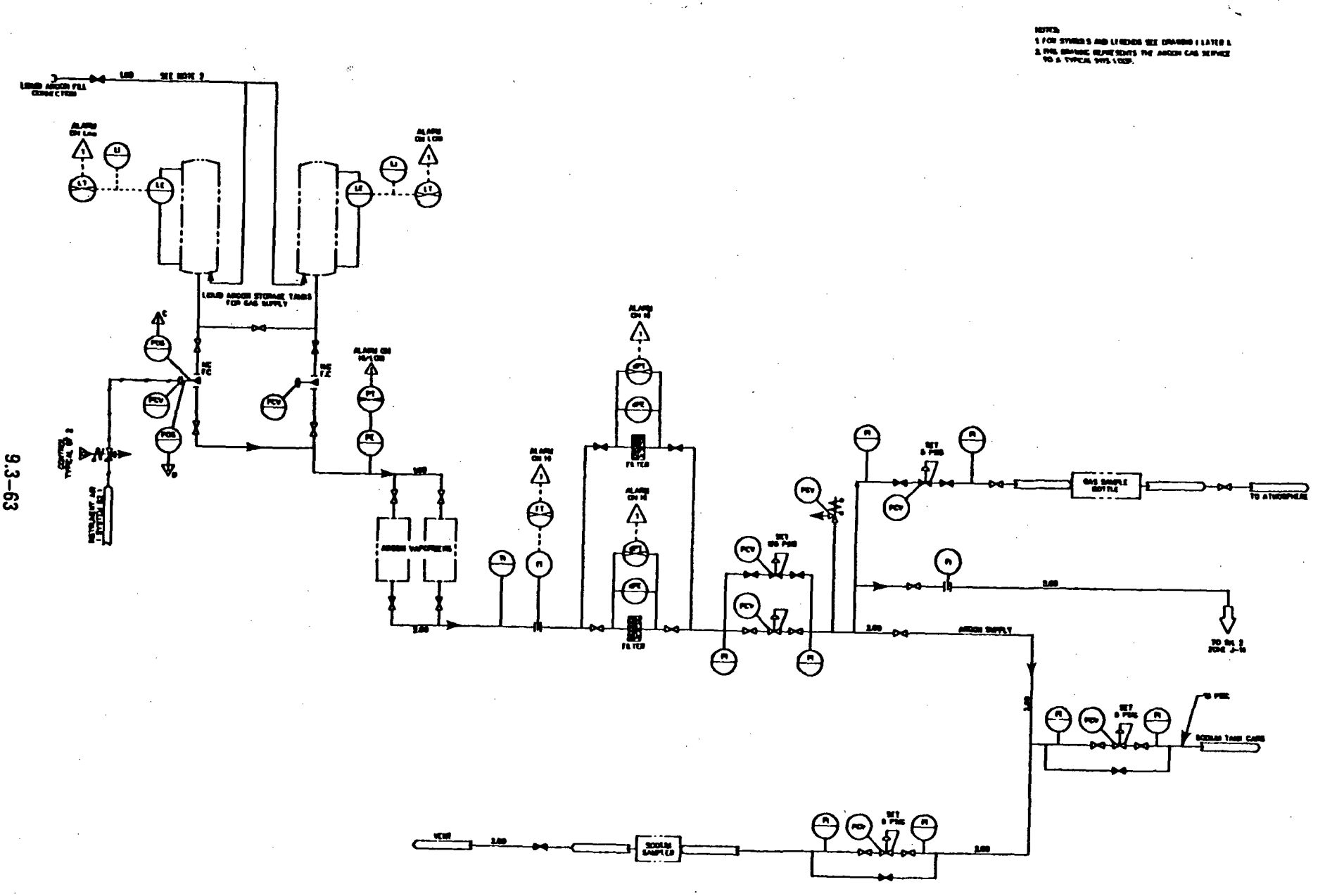

Figure 9.3–4 ARGON DISTRIBUTION – SGB (Sheet 1 of 2)

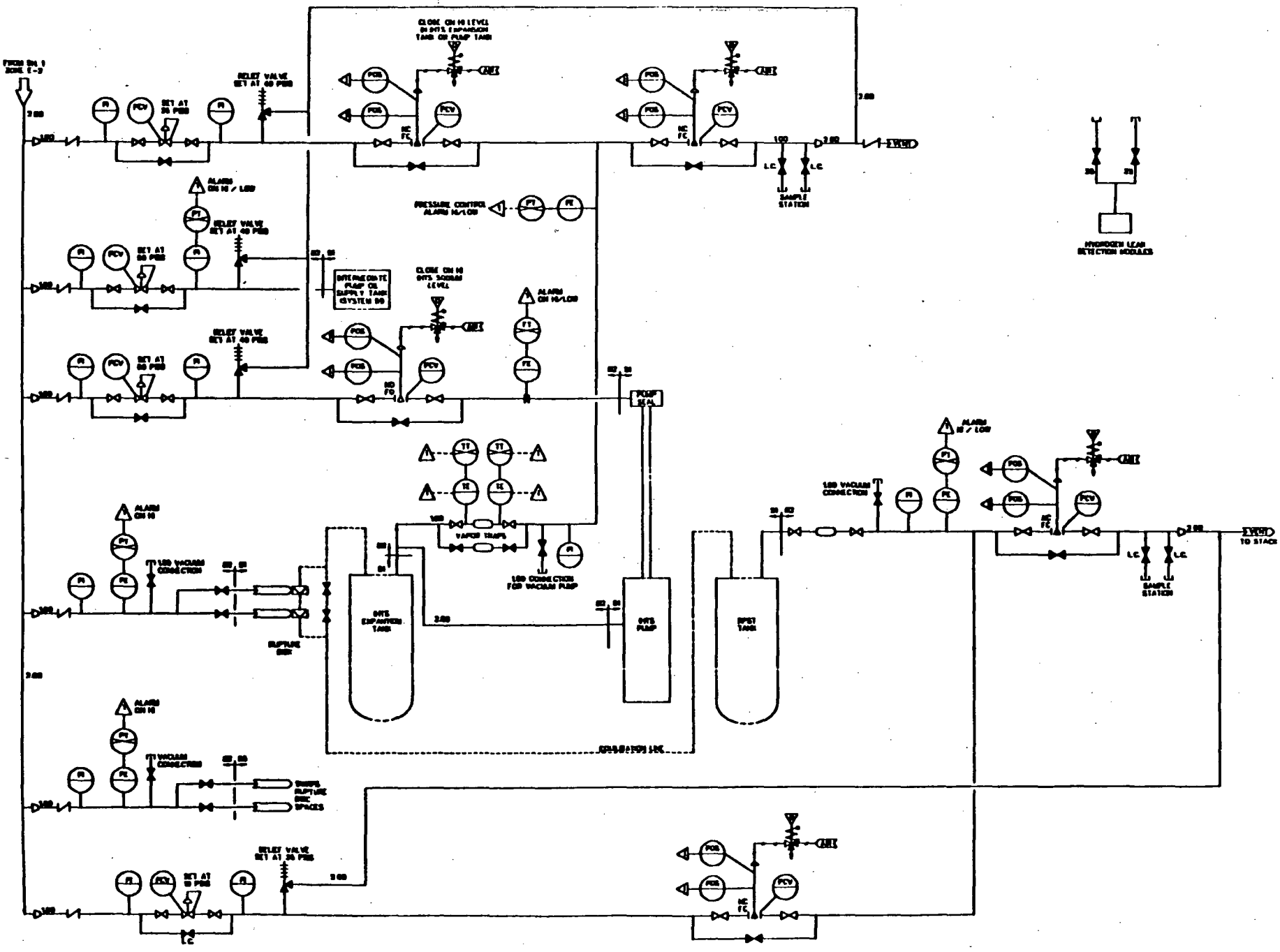

Figure 9.3–4 ARGON DISTRIBUTION – SGB (Sheet 2 of 2)

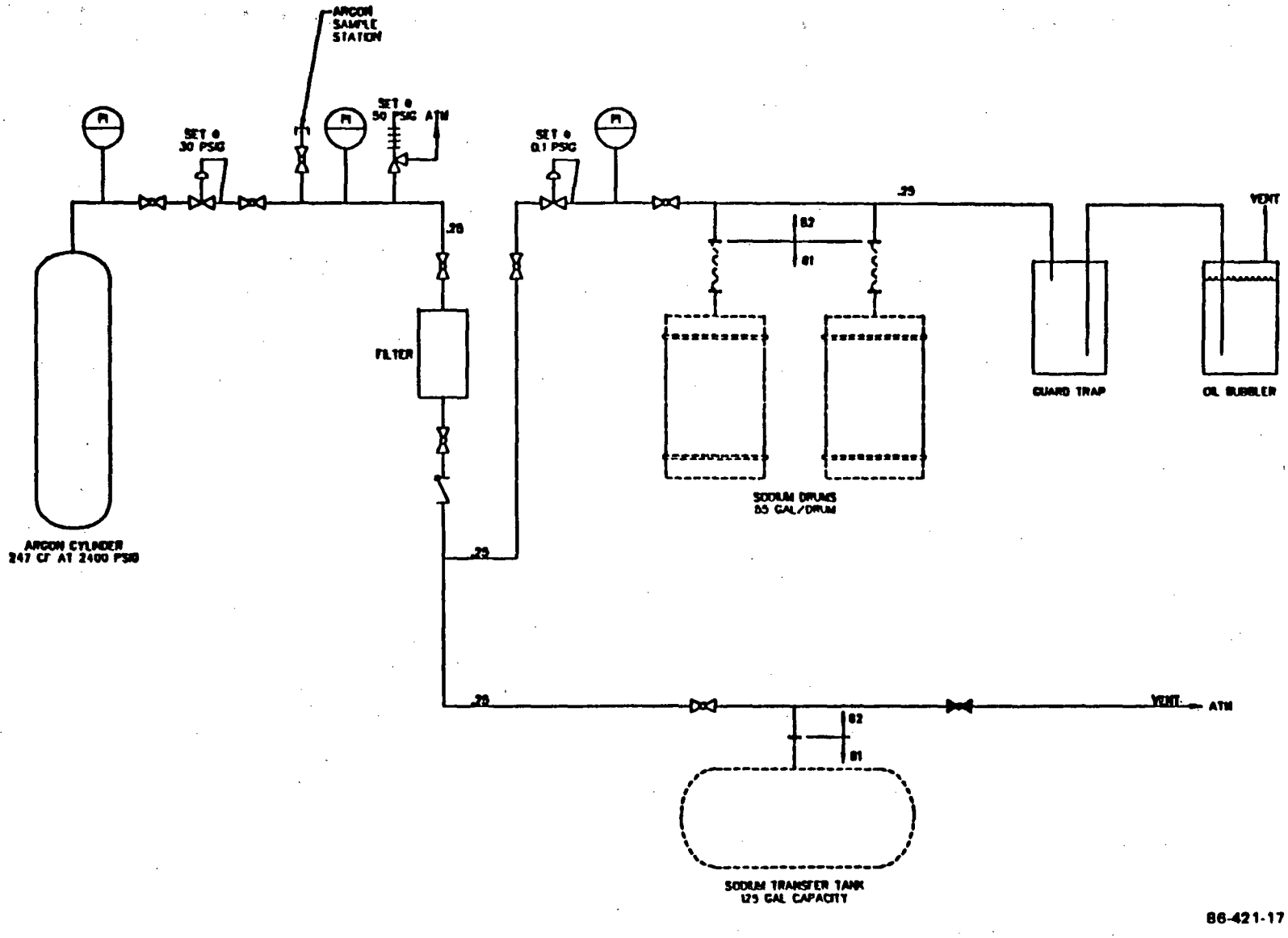

Figure 9.3–5 SODIUM DRUM STATION

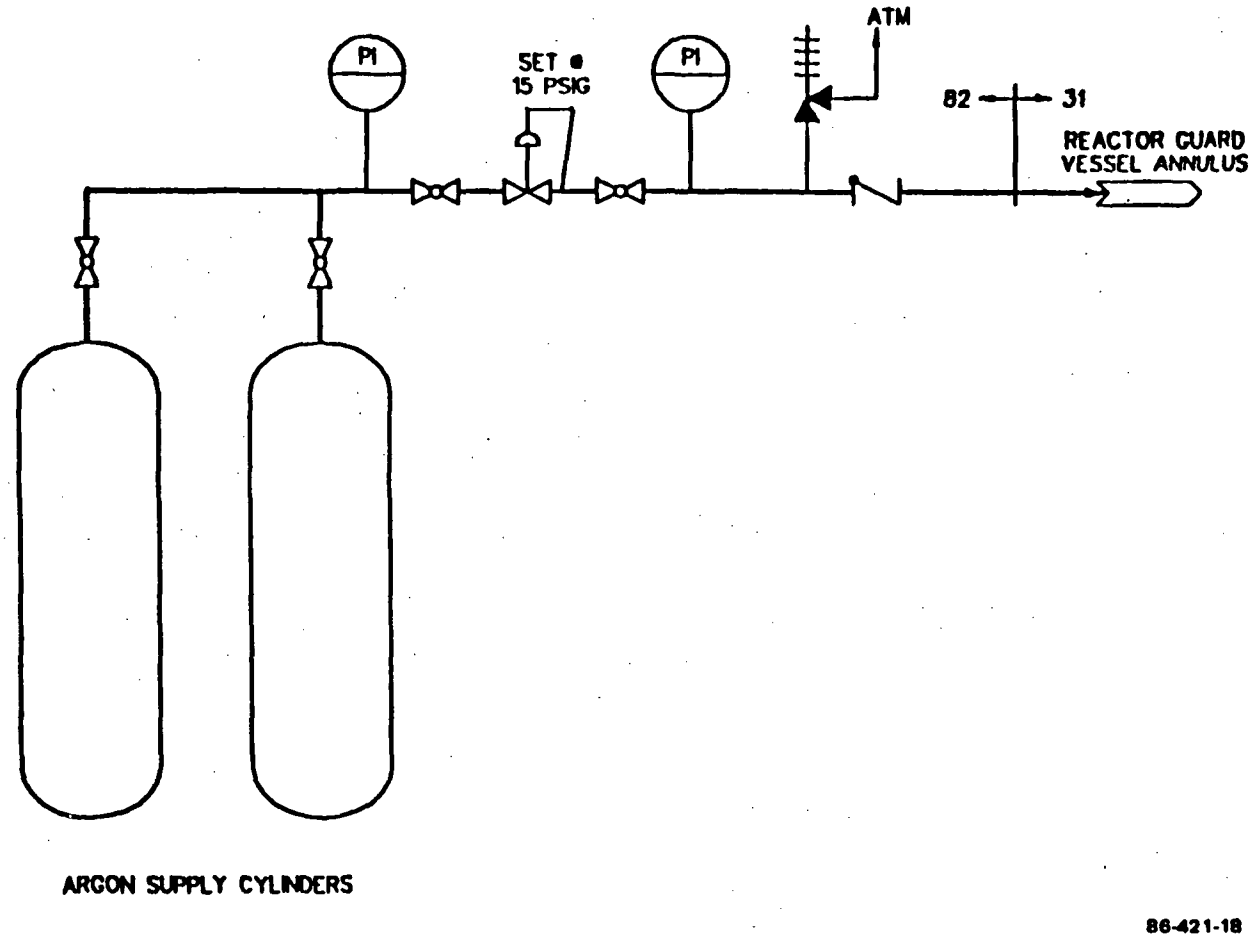

Figure 9.3–6 ARGON SUPPLY TO REACTOR GUARD VESSEL ANNULUS

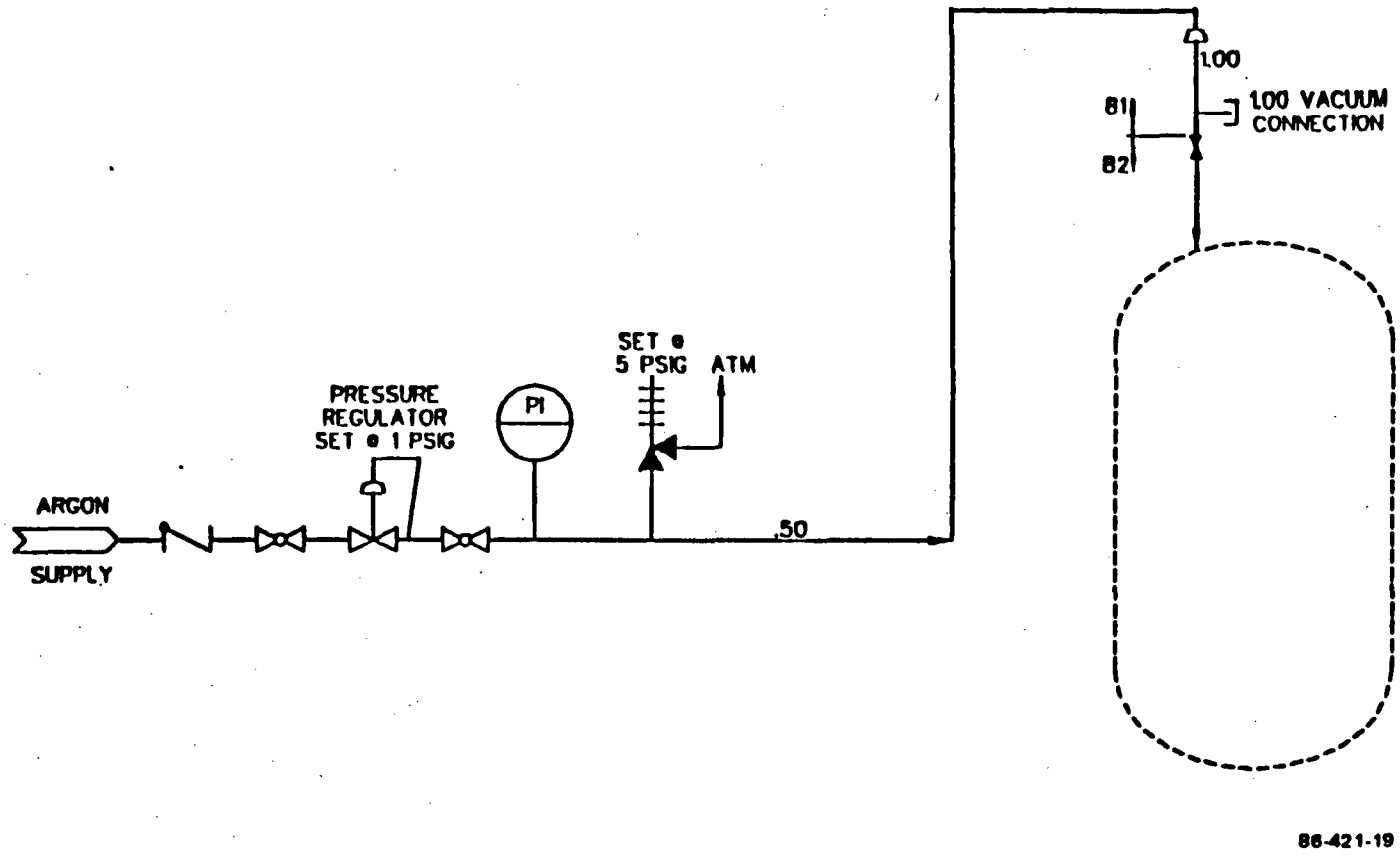

Figure 9.3–7 ARGON SUPPLY TO PRIMARY SODIUM STORAGE TANK

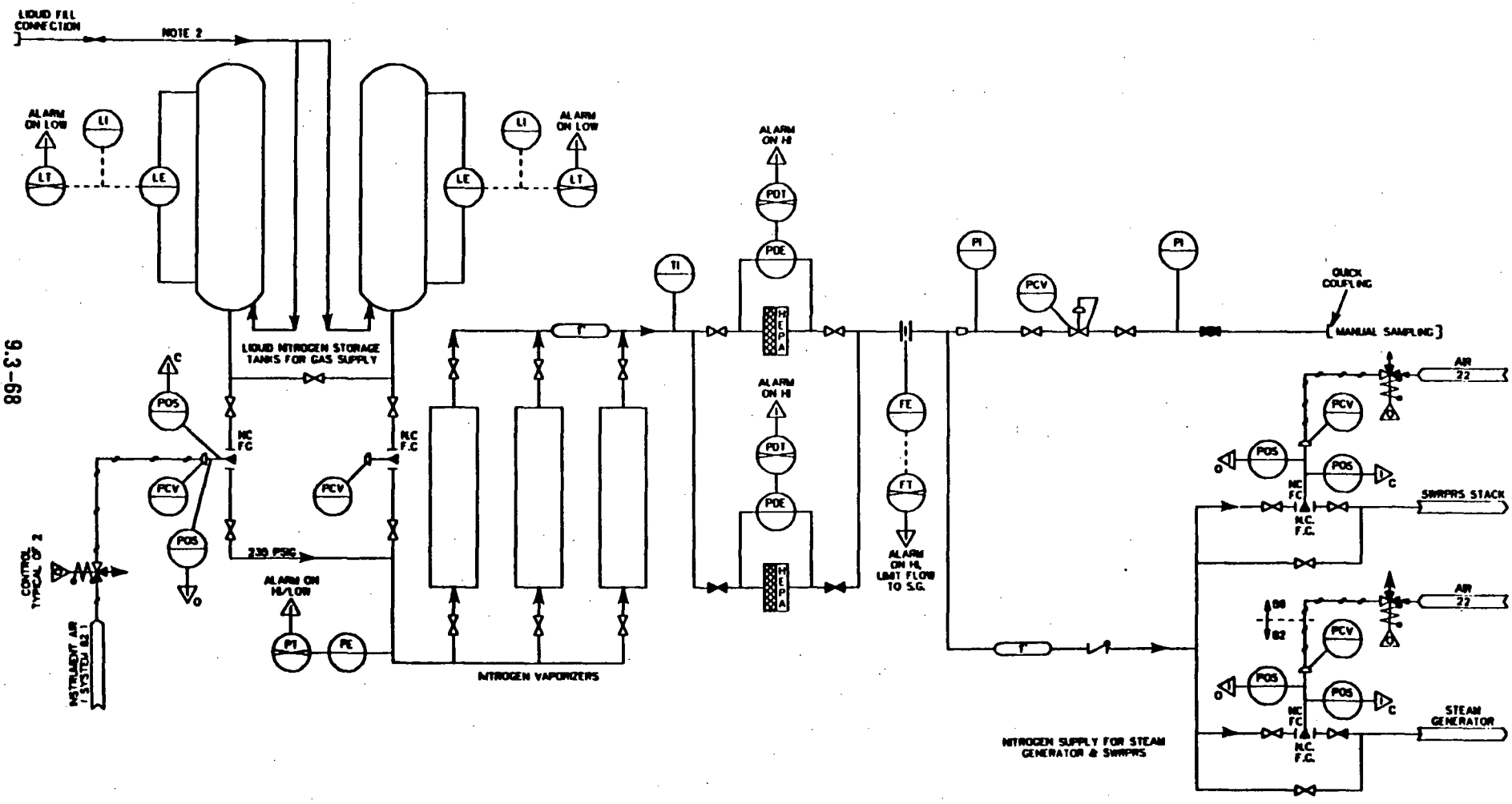

Figure 9.3–8 NITROGEN GAS DISTRIBUTION SUBSYSTEM

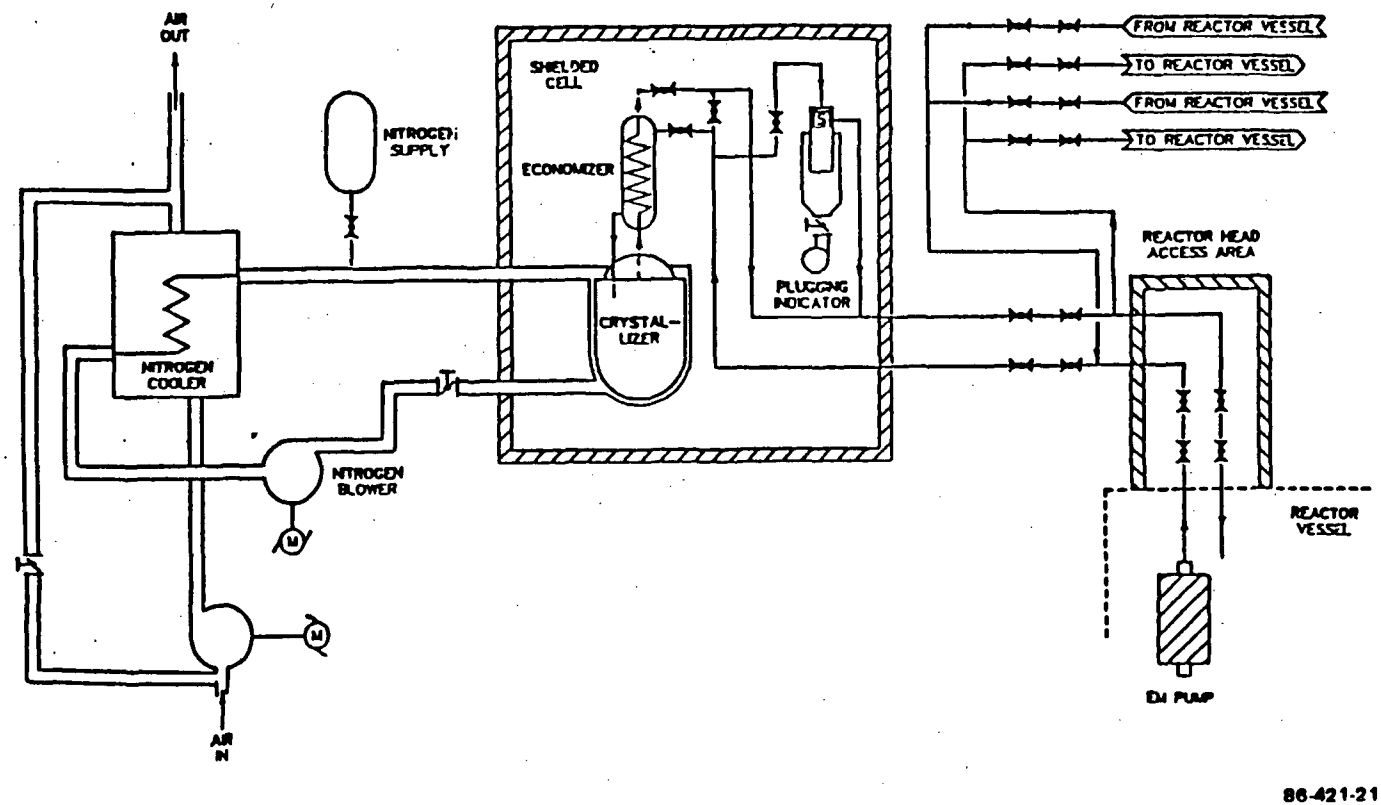

Figure 9.3–9 PRIMARY SODIUM PROCESSING SUBSYSTEM – SCHEMATIC DIAGRAM

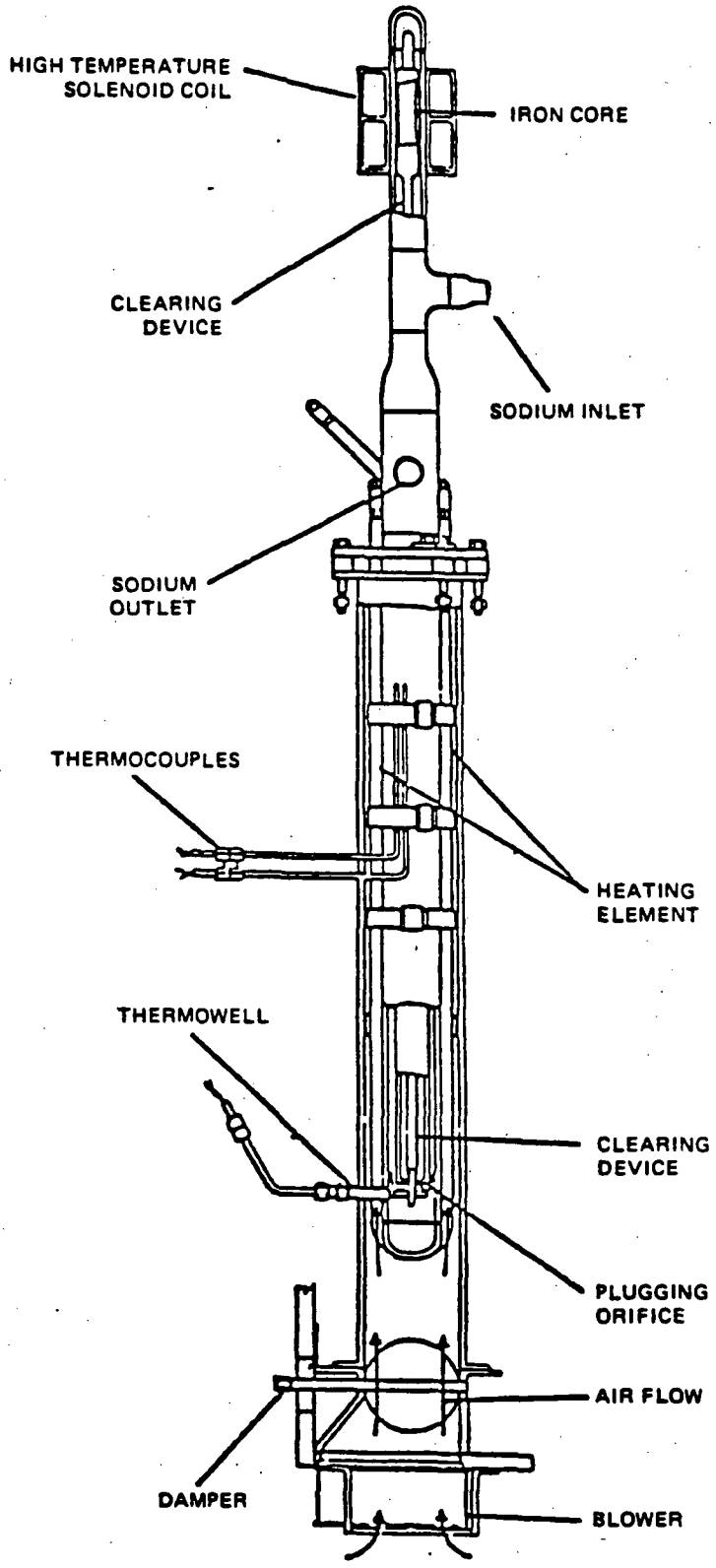

86-421-33

Figure 9.3–10 PLUGGING TEMPERATURE INDICATOR – SCHEMATIC DIAGRAM

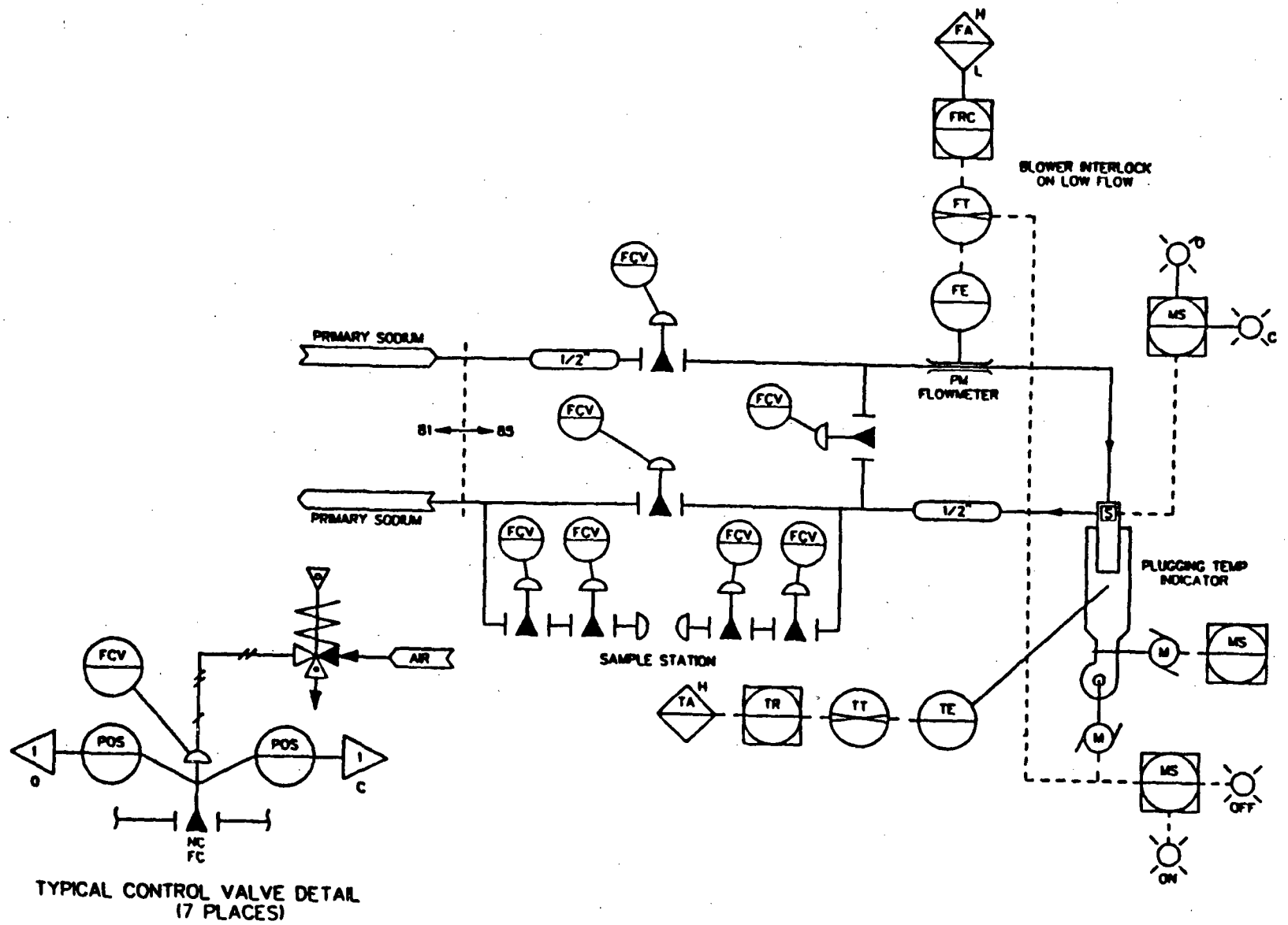

Figure 9.3-11 PHTS PLUGGING INDICATOR P&ID

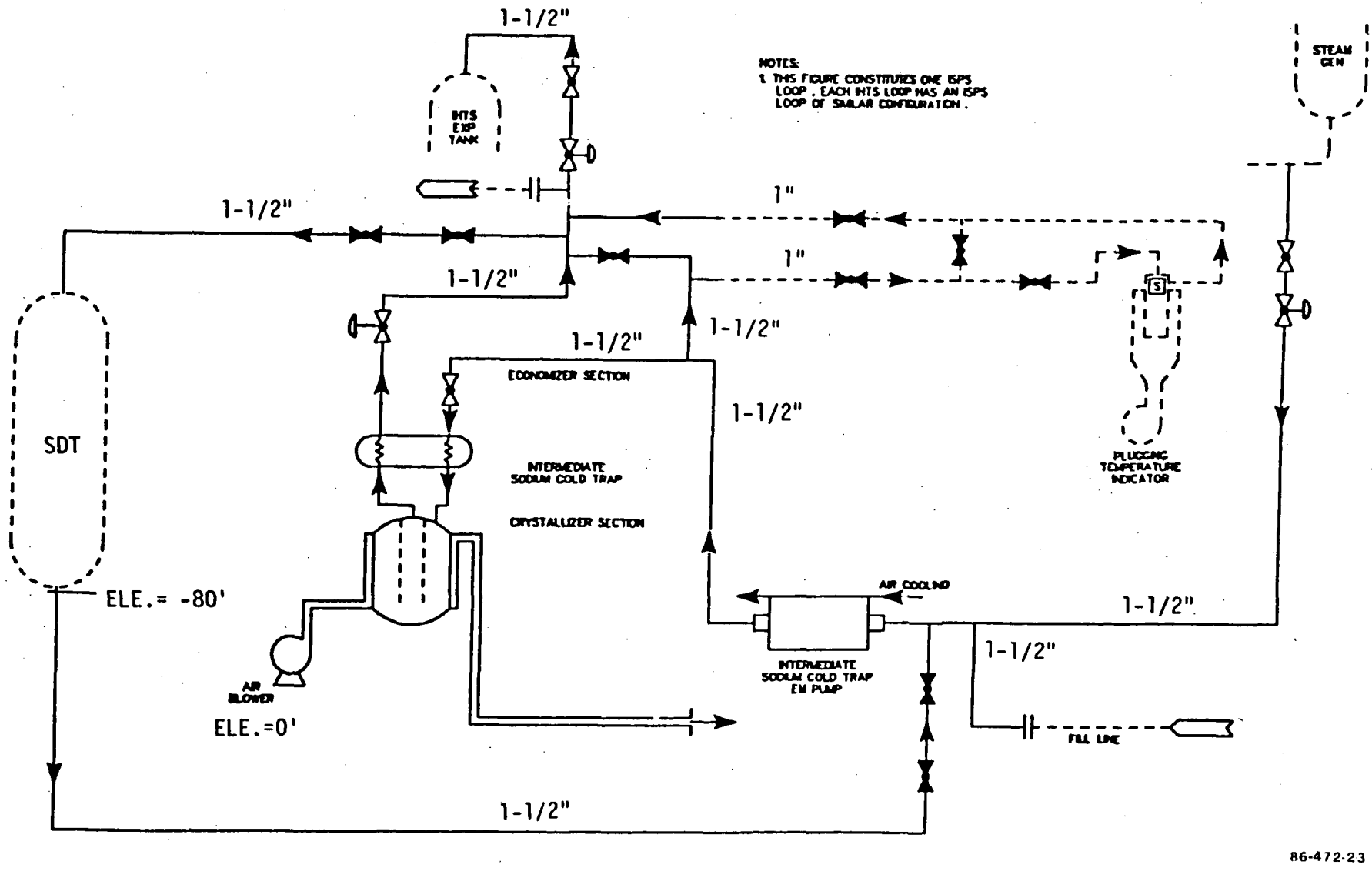

Figure 9.3–12 INTERMEDIATE SODIUM PROCESSING SYSTEM – FLOW DIAGRAM

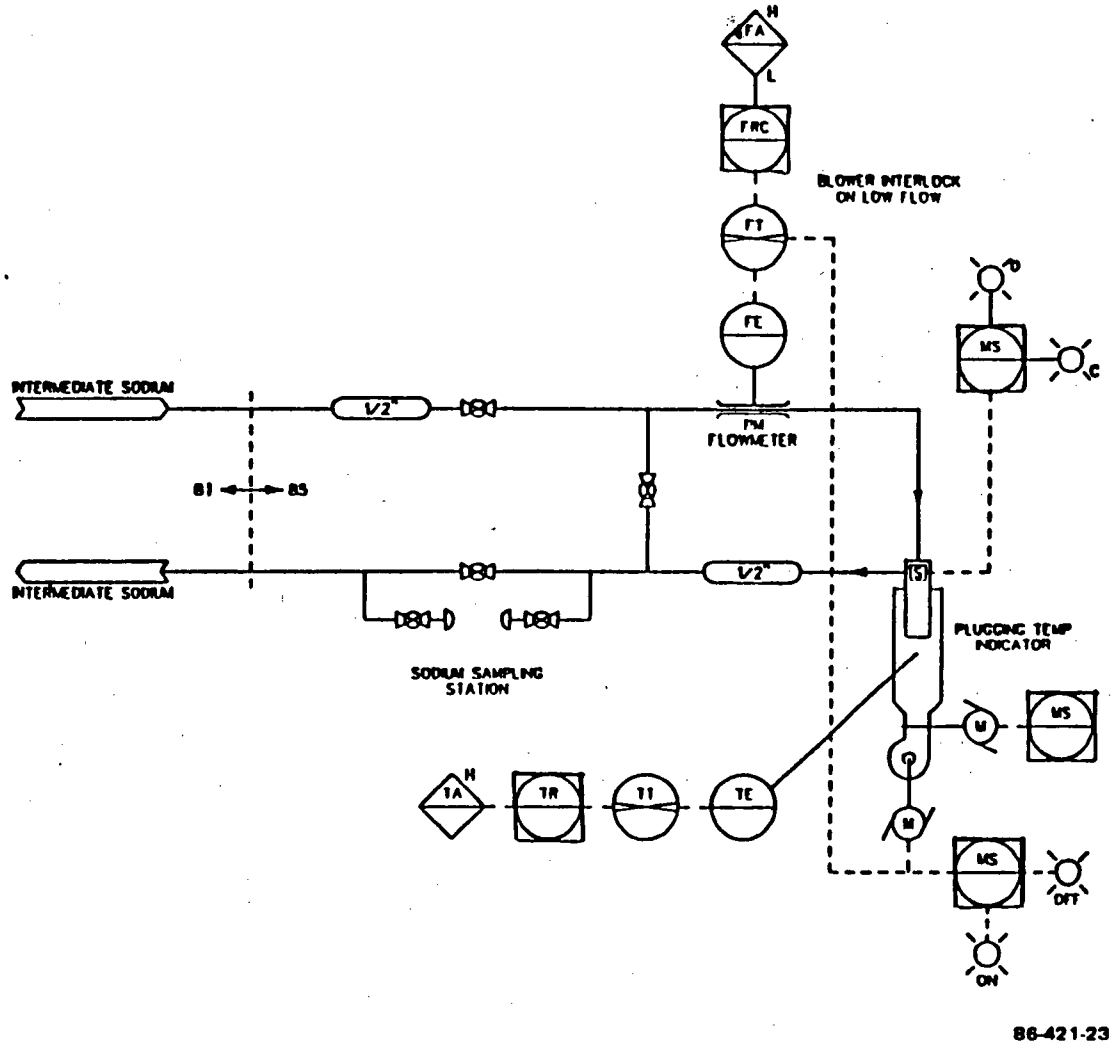

Figure 9.3–13 IHTS PLUGGING INDICATOR P&ID

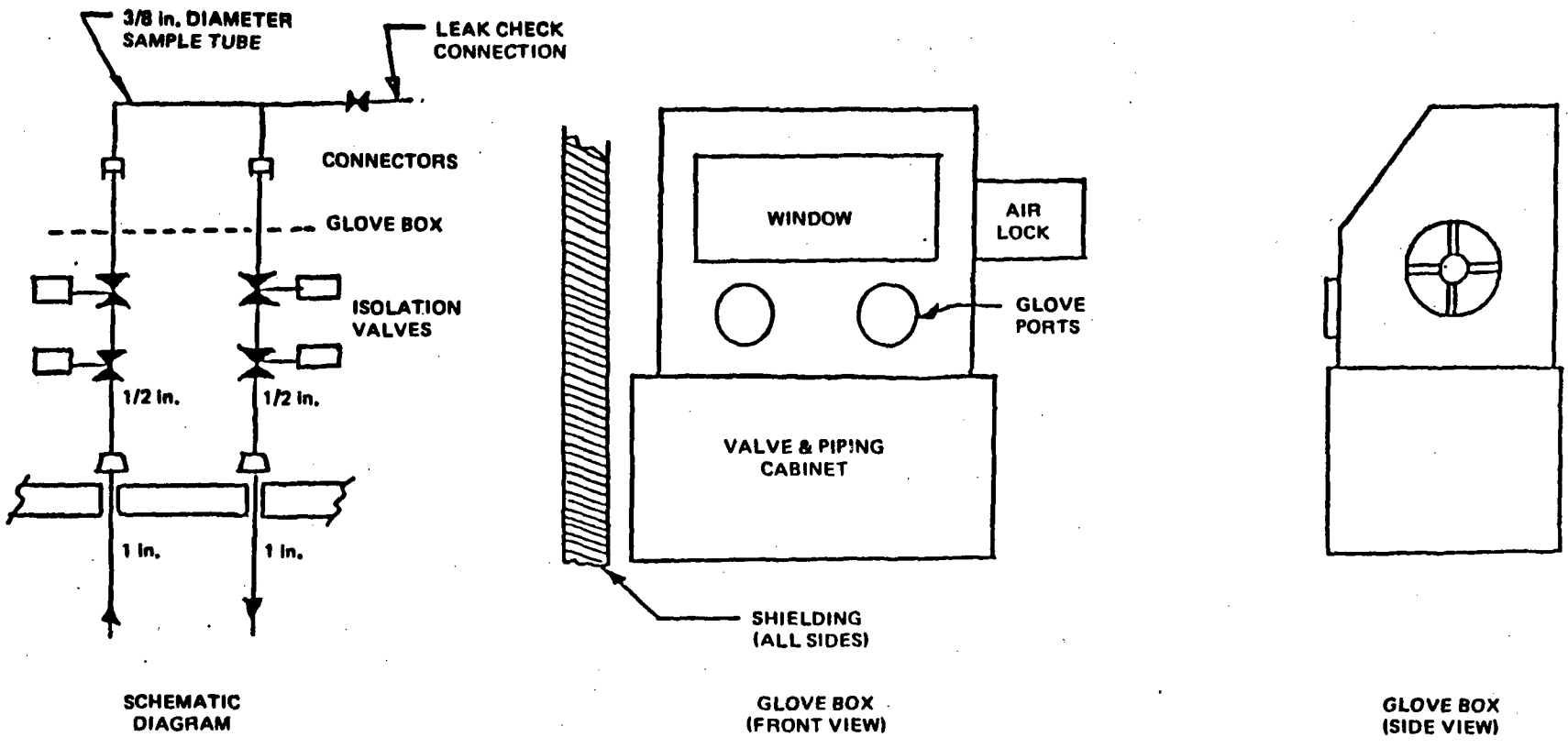

Figure 9.3–14 PRIMARY SODIUM SAMPLE STATION – SCHEMATIC

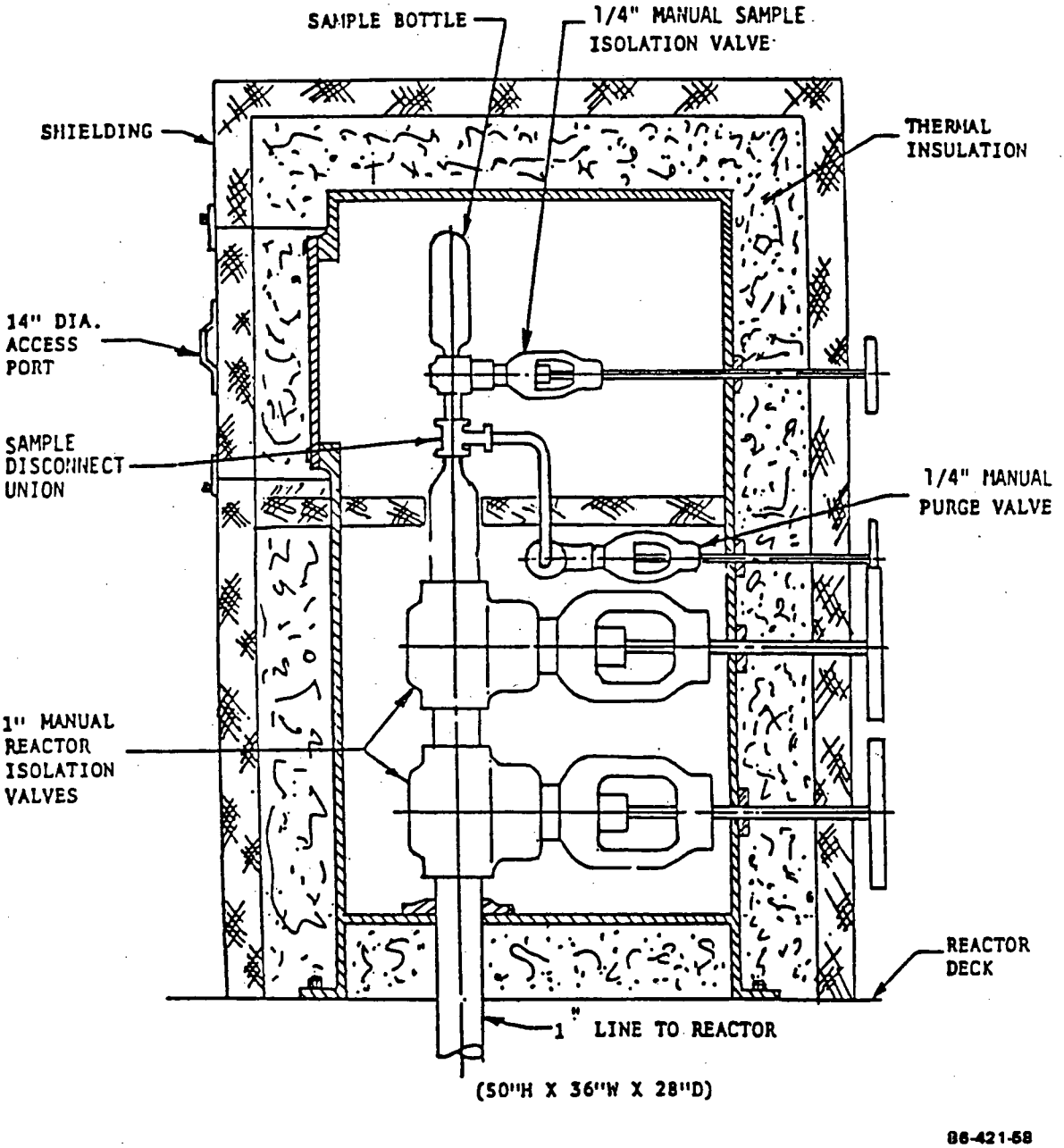

Figure 9.3–15 REACTOR COVER GAS SAMPLE STATION

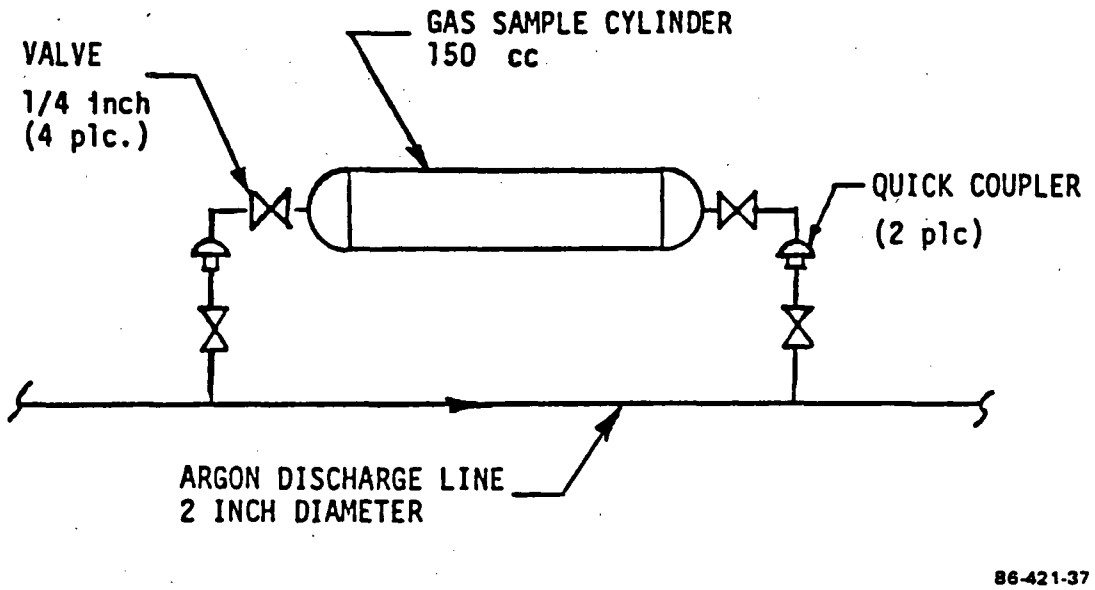

Figure 9.3–16 IHTS ARGON/NITROGEN GAS SAMPLE STATION

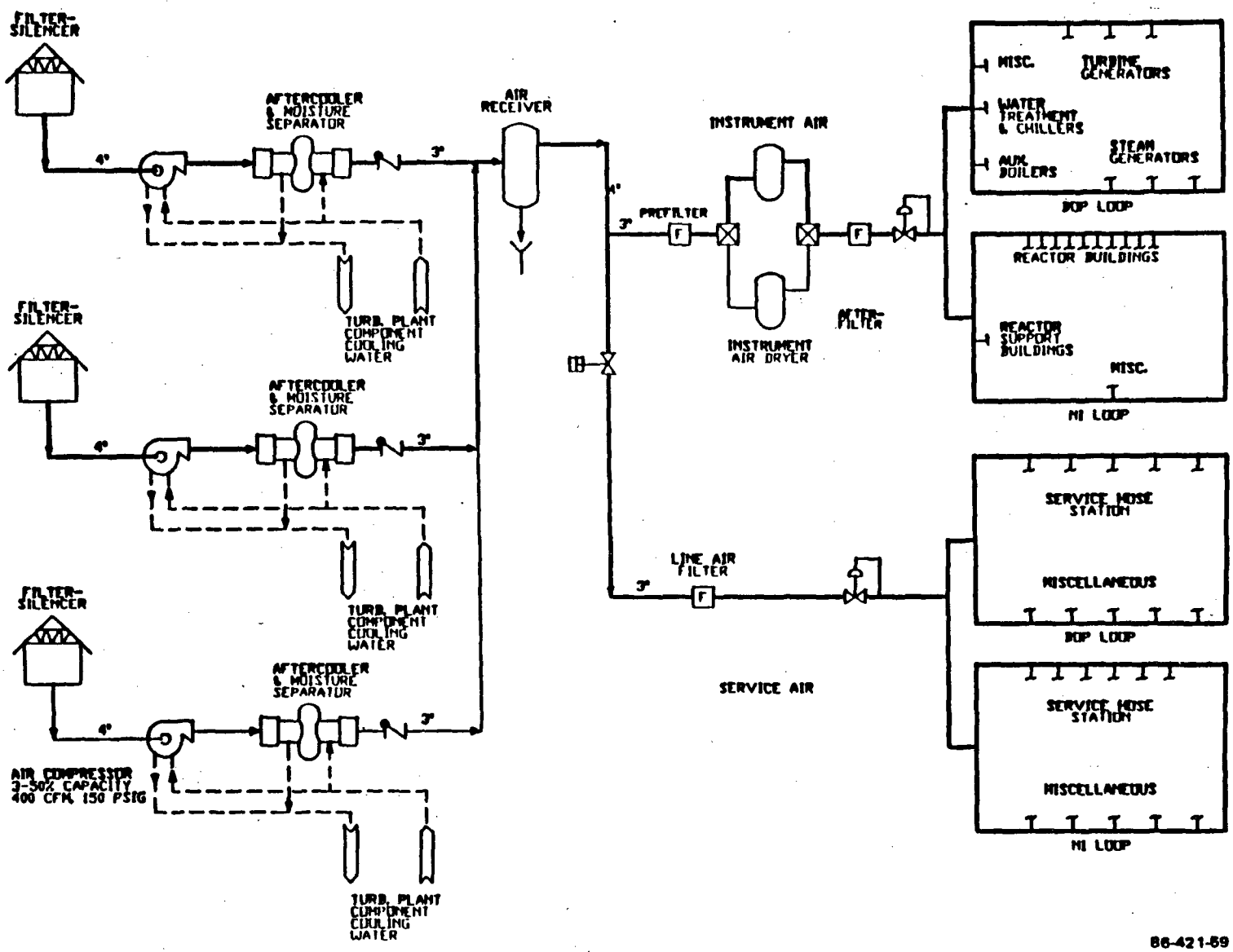

Figure 9.3–17 COMPRESSED AIR SYSTEM FLOW DIAGRAM

9.4 Heating, Ventilation, and Air Conditioning Systems

The plant heating, ventilating, and air conditioning (HVAC) system maintains the environmental conditions within design limits for the selected the nuclear island (NI) and the balance of plant (BOP) building spaces during normal and off-normal operating conditions.

9.4.1 Design Bases

9.4.1.1 Functions

The plant HVAC System performs the following functions:

1. Maintains the temperature, humidity, pressure, and cleanliness of the air atmospheres in the various building spaces during normal plant operation
2. Removes heat released by electrical and mechanical equipment, piping, lighting, other miscellaneous heat loads, and properly balances the heat gain or loss through the building structures
3. Provides directed air flow for cooling specific areas and equipment within the buildings
4. Provides ventilation and exhaust to and from equipment and work areas of the building
5. In conjunction with other systems, maintains the release of airborne radioactive particles and halogens to the outside environment below the acceptable limits during normal operation and accident conditions
6. Limits the spread of airborne radioactive materials and sodium aerosols within the NI buildings
7. Limits the intake of hazardous airborne materials into occupied areas

9.4.1.2 Design Requirements

The plant HVAC system shall be designed in accordance with the following:

1. The system shall be designed to accommodate building heat loads and design temperatures as listed in Tables 9.4-1 and 9.4-2.
2. The system shall be designed to operate within the following outdoor air conditions:
   a. For cooling during summer, 92°F dry bulb and 72°F wet bulb temperatures, with a 7.5 mph average wind velocity
   b. For heating during winter, 0°F dry bulb temperature with a 7.5 mph average velocity
3. Ventilation rates shall be based on occupancy, the heat loads to be removed, and the requirements for exhausting contaminants.
4. The noise criteria for the Plant HVAC System shall be in accordance with Occupational Safety and Health Administration (OSHA) requirements.
5. The Plant HVAC System components shall be powered from the auxiliary power system with duplicate components powered from separate buses.
6. The Plant HVAC System shall conform to the applicable sections of the following documents and codes: The American Society of Heating, Refrigerating and Air Conditioning (ASHRAC), American Society of Testing and Materials (ASTM), National Fire Protection Association (NFPA), Sheet Metal and Air Conditioning Contractors National Association (SMACNA), American National Standards Institute (ANSI) and Air Moving and Control Association (AMCA).

9.4.2 System Description

The plant HVAC system fulfills the HVAC requirements of the NI and BOP building areas. Each building or area includes one or more subsystems designed to provide for the specific HVAC needs of that building or area.

The plant HVAC system consists of several subsystems serving various areas of the NI and BOP buildings, each performing specialized functions as required for the area served. Each subsystem consists of combinations of various basic components as required to satisfy the performance requirements for that subsystem. The basic components for the typical air conditioning and ventilation systems include air handling units, fans or blow-

ers, cooling and heating coils, filters of various efficiencies, ductwork dampers, isolation valves, instrumentation and controls, and other accessories as required.

One of the basic functions of this system is to remove heat generated within the buildings or areas from various sources. This is generally accomplished either by circulating outside air through the area or through unit coolers. In the first case, heat is rejected to the outside air. In the second case, heat is rejected to the chilled water system by the use of finned-tube cooling coils.

The system also functions to maintain building area temperatures. Air that is drawn into the buildings for ventilation is heated, if required, either by finned-tube heating coils served by the steam heating system or by electric heating coils.

Natural circulation ventilation is used whenever possible. For instance, the HAA and the electrical equipment vaults, located in the reactor structures utilize natural ventilation during post accident periods. The reactor vessel auxiliary cooling system (RVACS) will provide vacuum in the HAA and the vaults to enhance the natural circulation. During normal operation, the ventilation is provided by a typical forced air system.

Unit steam heaters are provided where there is insufficient internal heat load to maintain minimum design space temperatures. Unit heaters are located around the perimeter of the structure.

A simplified typical air conditioning system flow diagram is shown in Figure 9.4-1. Air from air conditioned areas is drawn by air return fans and directed to the air handling units. Air is filtered, cooled if needed by finned tube coils supplied with chilled water, humidified and recirculated to the area conditioned through area heaters where air is heated if necessary. A controlled percentage of outside air is supplied through the air handling units to provide for exchange of recirculated air. The excess

air is exhausted to the outside. Electric heaters are provided in the air handling units to protect the system from freezing.

A typical ventilation system flow diagram is shown on Figure 9.4-2. Outside air is drawn through roughing filters, heated if necessary in finned coils supplied with steam and discharged by fans to the area ventilated. In the cooling mode, air after moving through the area is discharged outside. In the heating mode, air is recirculated through the area.

Table 9.4-1

NUCLEAR ISLAND AREA DESIGN HEAT LOADS AND DESIGN TEMPERATURES

	Design Heating Load, MMBtu/hr	Design Cooling Load MMBtu/hr	Normal °F	Summer Design Max, °F	Winter Design Min. °F
Reactor Buildings					
Head access area	-	1.2	-	120	60
Electrical equipment areas	-	25.0*	-	120	60
Reactor Service Building	0.2	0.2			
Radioactive Waste Building	0.7	0.7		(See	Note)
Personnel Service Building	0.2	0.2			
Total	1.1	27.3			

* Post Accident 0.15 MMBtu/hr

Note:
Design Temperatures (°F) for Reactor Buildings:

Normally occupied areas	75±5	80	65
Accessible equipment areas	85±10	95	60
Enclosed equipment areas	90±10	120	60
Pipeways	-	120	60
Cableways	-	120	60
Stairs and walkways	85±10	95	50

Table 9.4-2

BOP BUILDING AREA DESIGN HEAT LOADS AND DESIGN TEMPERATURES

	Design Heating Load, MMBtu/hr	Design Cooling Load MMBtu/hr	Normal °F	Summer Design Max,°F	Winter Design Min,°F
Control Building	2.5	3.5	70±5	75	65
Turbine-Generator Buildings:					
Ground and Mezzanine Floors	6.0	6.0	95±10	105	50
Operating Areas and Above	2.0	10.0	100±10	110	50
Steam Generator Buildings	3.0	9.0	100±10	110	60
Circulating Water Pump House	0.5	0.2	90±10	100	60
Raw Water Pump House	0.2	0.1	90±10	100	60
Fire Pump House	0.3	0.1	90±10	100	60
Administration Building	0.8	0.8	75±5	80	65
Maintenance Building	1.3	1.3	75±5	80	65
Warehouse	0.4	0.4	90±10	100	60
Water Treatment/ Compressed Air Building	0.3	0.2	90±10	100	60
Auxiliary Boiler Building	0.1	0.1	100±10	110	60
Sewage Treatment Facility	0.1	0.1	90±10	100	60
Guard House (BOP & NI)	0.1	0.1	75±5	80	60
Gas Turbine Building	0.4	0.4	90±10	100	60
BOP Personnel Service Building	0.3	0.3	75±5	80	65
Training Center Building	0.3	0.3	70±5	75	65
Miscellaneous	1.0	1.0	90±10	100	60
Total	20.6	33.9			

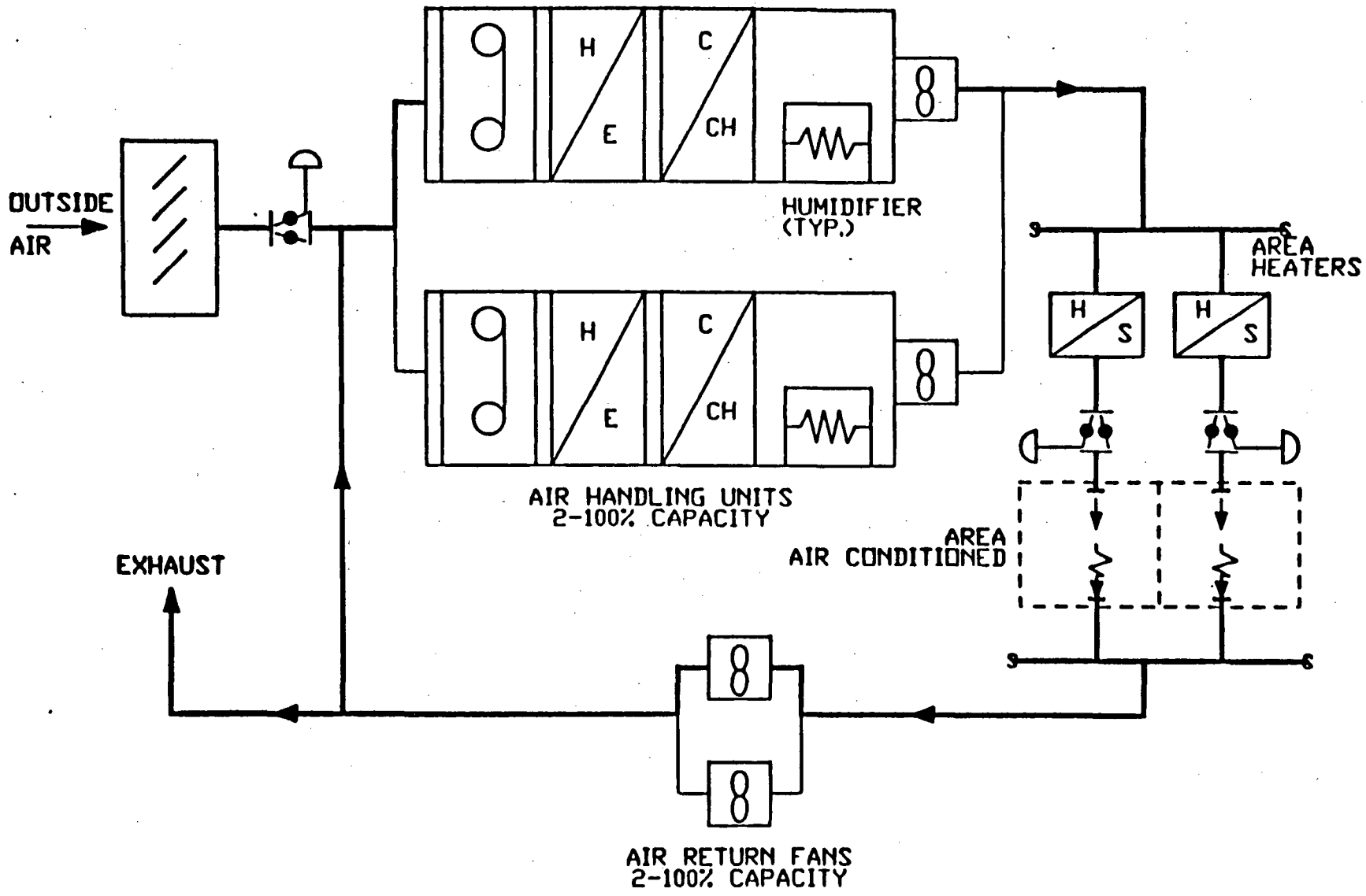

Figure 9.4–1 TYPICAL AIR CONDITIONING SYSTEM FLOW DIAGRAM

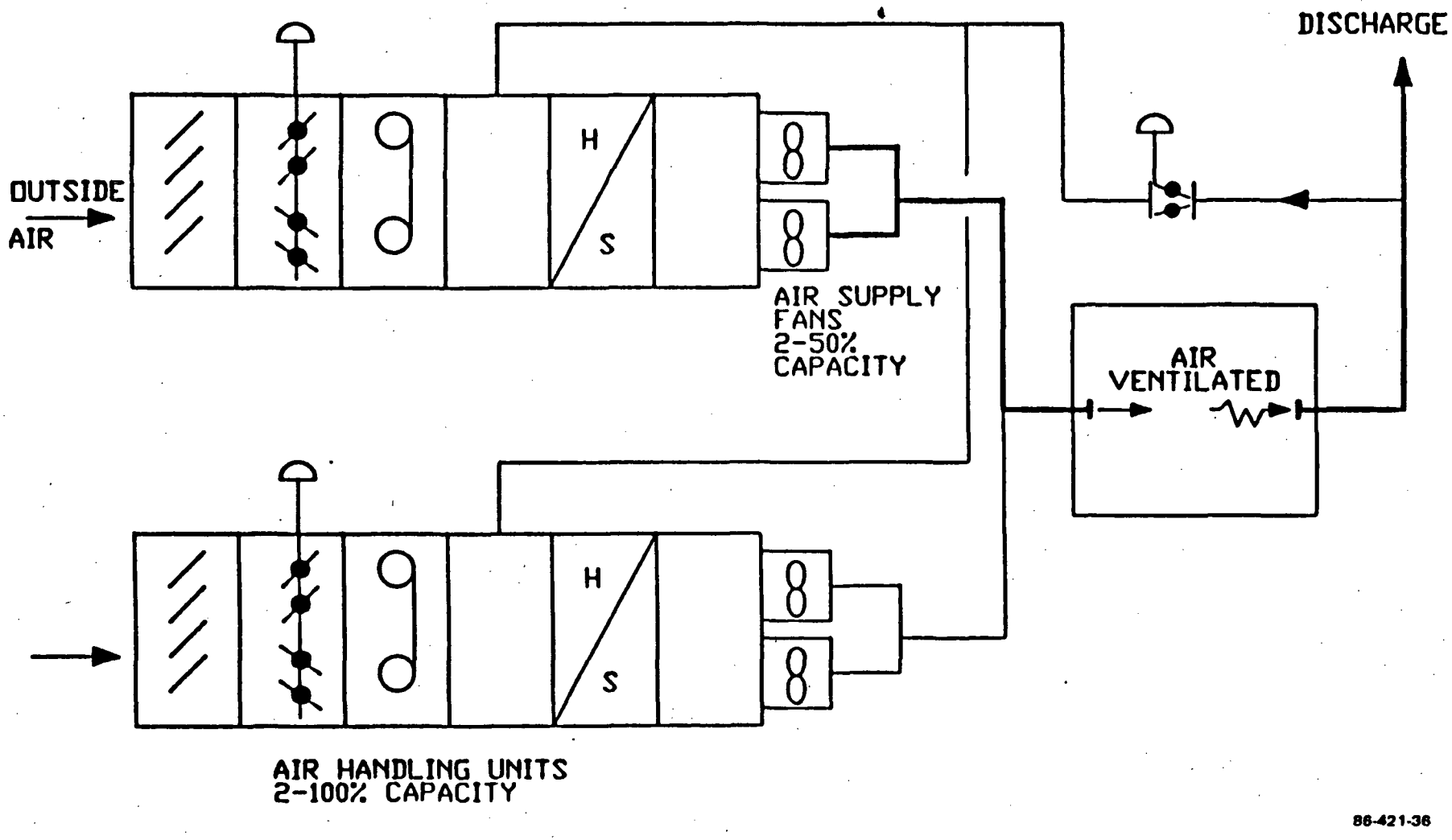

Figure 9.4–2 TYPICAL VENTILATION SYSTEM FLOW DIAGRAM

9.5 Auxiliary Liquid Metal Systems

The auxiliary liquid metal system receives, transfers, and purifies all sodium used in the plant. The system is comprised of the following subsystems:

1. Sodium Receiving and Transfer Subsystem (SRTS)
2. Intermediate Sodium Processing Subsystem (ISPS)
3. Primary Sodium Processing Subsystem (PSPS)

9.5.1 Design Bases

9.5.1.1 Functions

9.5.1.1.1 Auxiliary Intermediate Liquid Metal System

The auxiliary intermediate liquid metal systems include the sodium receiving and transfer subsystem and the intermediate sodium processing subsystem (ISPS). It performs the following functions:

1. Receives, melts, and transfers to storage all sodium delivered to the site.
2. Provides the capability to transfer the intermediate sodium for off-site disposal.
3. Purifies the sodium in the intermediate heat transport system (IHTS) or in the sodium dump tank (SDT) continuously or intermittently.
4. Provides the capability to fill the IHTS loop or SDT (intermediate heat transport system) with sodium using the ISPS EM pump.
5. Provides the capability to transfer sodium between the IHTS loop and SDT.
6. Provides the capability to fill the reactor vessel initially with non-radioactive sodium using the ISPS EM pumps.
7. Provides sodium sample connections for the impurity monitoring and analysis system for fresh sodium and sodium in the IHTS loop.

8. Provides sodium to the intermediate sodium plugging indicator.

9.5.1.1.2 Auxiliary Primary Liquid Metal Systems

The auxiliary primary liquid metal systems consist of the primary sodium processing subsystem and the primary sodium storage vessel purification subsystem. This system performs the following functions:

1. Purifies the primary sodium in the reactor vessel during refueling and during normal reactor operation and in the primary sodium storage vessel during reactor module replacement.
2. Provides sodium transfer and storage facilities (the primary sodium storage vessel) for the primary sodium in one reactor module.
3. Provides heat removal for the coolant used in the primary cold traps.
4. Provide sodium to the primary sodium plugging indicator.
5. Provide primary sodium sample connections for Impurity Monitoring and Analysis System.

9.5.1.2 Process Requirements

9.5.1.2.1 General

All fresh sodium shall be filtered prior to transfer to systems or storage vessels.

There shall be no permanent piping connections between the intermediate and primary sodium cooling auxiliary systems.

Capability to sample incoming sodium shall be provided.

All components and piping containing sodium or sodium vapor shall be thermally insulated and electrically trace heated.

The systems trace heating shall have the capability to heat up dry gas filled or sodium vapor-containing piping and components from ambient temperature to 450°F, outer surface temperature, within 120 hours maximum. The minimum ambient temperature for indoor equipment shall be 50°F and for outdoor equipment -40°F. The maximum heat-up rate shall be dictated by stress considerations. Heating shall be accomplished by constant heat input rates over the heat-up cycle unless stress considerations require changes in the heat input rate during the cycle.

The Sodium Piping and Equipment Heating and Insulation System shall provide the capability to heat and maintain the sodium filled subsystems from 400°F to the following temperatures at a rate of 50°F/hr minimum:

1.	Receiving and Transfer Subsystem	450°F
2.	Intermediate Sodium Processing Subsystem	650°F
3.	Primary Sodium Processing Subsystem	900°F
4.	Primary Sodium Storage Vessel	450°F

Sodium piping normally not filled with sodium during plant operation shall have the capability for heat-up from ambient (70°F) to 400°F, outer surface temperature, using heaters. The heaters shall be capable of maintaining the piping internal temperature at 400°F during all normal and off-normal plant operation.

The piping and components in the Steam Generator Building shall be insulated to limit the surface temperature of the insulation to 140°F at normal operation with a maximum ambient building temperature of 100°F.

The piping and components within the Reactor Building shall be insulated to limit the surface temperature of the insulation to 140°F at normal operation with a maximum ambient temperature of 100°F.

The piping and components located outdoors shall be insulated to limit the surface temperature of the insulation to 140°F at normal operation with a maximum ambient temperature of 115°F.

The thermal design shall ensure that the concrete to equipment support interface will not exceed 150°F.

The horizontal runs of sodium piping shall be sloped a minimum of 1/8 inch per foot. Drains shall be located at all low points. All high points shall be vented.

The Auxiliary Liquid Metal Systems shall interface with the following systems:

1. Building Electrical Power System
2. Balance of Plant Buildings
3. Reactor Support Building
4. Compressed Gas System
5. Plant HVAC System
6. Plant Fire Protection System
7. Reactor Systems
8. Nuclear Island Maintenance and Inspection System
9. Balance of Plant Maintenance System
10. Intermediate Heat Transport System
11. Liquid Metal Leak Detection System
12. Sodium Piping and Equipment Heating and Insulation System
13. Inert Gas Receiving and Processing System
14. Impurity Monitoring and Analysis
15. Plant Control System
16. Radiation Monitoring System

All Auxiliary Liquid Metal System piping and equipment containing sodium shall be equipped with accessible sodium leak detectors of sufficient sensitivity to detect sodium leaks soon enough to minimize damage due to corrosion or fire. All valves shall have a leak detector installed between the stem seal and the backup stem seal.

To minimize the probability of a sodium-water reaction in the event of a sodium leak or water line break, water lines shall not be routed in the vicinity of sodium-containing equipment except in the area of the steam generators.

9.5.1.2.2 Sodium Receiving and Transfer Subsystem

The sodium receiving and transfer subsystem shall:

1. Provide the capability for melting and transfer of all plant sodium to the IHTS loop, reactor vessel, or SDT from railroad cars or drums. Sodium unloading capability, transfer from plant sodium systems to tank cars, shall also be provided.
2. Provide the capability to melt the contents of a sodium railroad tank car of approximately 10,000 gal. capacity. The tank car melt station shall be portable to allow rail movement to each steam generator building.
3. Provide temporary insulated and trace heated piping for transfer of sodium from the tank cars to the above stated destinations.
4. Provide the capability to transfer sodium from the tank car at a rate of approximately 50 gpm by gravity and/or pressurization with argon cover gas.
5. Provide a portable sodium drum unloading station to supply small quantities of sodium to the various systems as needed. The drum station shall have the capability of handling two 55-gallon drums simultaneously.

9.5.1.2.3 Intermediate Sodium Processing Subsystem (ISPS)

The intermediate sodium processing subsystem shall provide for the continuous removal of impurities from the sodium contained in the IHTS in order to maintain a level of purification necessary for that system to operate properly for its full design life of 60 years.

Separate, independent, purification capability shall be provided for each IHTS loop.

The capacity of the sodium processing system shall be such that the entire volume of sodium contained in the IHTS loop may be processed approximately three times in a 24-hour period.

The capacity of the purification components shall be based either on the oxygen and hydrogen in-leakage expected during startup, normal plant operation or on tritium removal considerations. The capacity shall not be based on IHTS sodium cleanup after a sodium-water reaction.

The purification system shall have the capability of cold trapping the IHTS at normal, hot standby and refueling conditions.

The purification system shall have the capability of cold trapping the SDT at sodium fill conditions (400°F).

The cold traps shall have a minimum capacity to cold trap the IHTS at normal operating conditions for 3 years (after initial clean-up of the IHTS sodium).

The cold trap EM pumps shall have the capability to fill the IHTS and/or the reactor vessel (using temporary piping) with sodium from the SDT.

The intermediate sodium cold traps and EM pumps shall be cooled by air.

9.5.1.2.4 Primary Sodium Processing Subsystem

The primary sodium processing subsystem shall provide for the removal of impurities from the sodium in the reactor vessel during refueling and during hot standby conditions. In addition, the system shall provide for removal of impurities from the sodium in the primary sodium storage vessel.

Three primary sodium cold trapping systems shall be provided; one for each power block of three reactor modules. Each primary sodium cold trapping system shall be located in a shielded cell (primary sodium equipment vault) in the reactor building which services three reactor modules.

The capacity of the sodium processing subsystem shall be such that the entire volume of sodium contained in the reactor vessel may be processed at least once every 24-hour period.

The primary sodium processing subsystem shall provide sodium storage for the primary sodium contents of one reactor vessel to be used during reactor assembly replacement.

The primary sodium cold traps shall be cooled by nitrogen.

Facilities to cool the nitrogen by heat transfer to ambient air shall be located in the primary sodium equipment vault.

9.5.1.3 Structural Requirements

The auxiliary intermediate liquid metal system components shall be designed to the ASME Boiler and Pressure Vessel Code, Section VIII and piping and fittings to ANSI B31.1, Power Piping Code as a minimum.

The auxiliary primary liquid metals system components shall be designed to the ASME Boiler and Pressure Vessel Code, Section III.

9.5.1.3.1 Steady State Structural Requirements

Design, fabrication, erection and testing of components which comprise the sodium boundary shall conform to the component code and standards matrix given in Table 9.5-1, Structural Design Parameters.

The structural design for the components and piping shall be based upon the pressures and temperatures given in Table 9.5-1, Structural Design Parameters.

Structural design shall provide for system fill under conditions of full vacuum with system components at an average temperature of 400°F and local hot spot temperatures of 600°F.

All components and piping shall be designed for exposure to the operating environment given in Table 9.5-2, and Table 9.5-3.

All sodium or sodium vapor pressure boundary welds shall be full penetration butt welds and shall be surface examined by the dye penetrate method and volumetrically examined by radiograph in accordance with the procedures and acceptance standards of the applicable Code.

All liquid metal components and assembled systems shall be subjected to a helium leak test in accordance with the procedures and acceptance standards of the applicable Codes for component fabrication and pre-service inspection.

Establishment of the limiting values for design stress intensity shall include allowances for any known or predictable degradation of mechanical properties that may occur such as a result of irradiation, stress at service temperatures, and changes in material chemistry over the design life.

Penetrations, weld joints, and discontinuities shall exhibit smooth transitions to minimize stress concentrations. Welds shall be located at low stress regions and shall be of a design which will permit radiography of all joints during fabrication.

The natural frequencies of all components shall be designed, where possible, to avoid resonance with all expected pump driving frequencies; where this is not possible, the component design shall ensure that structural damage will not occur as a result of resonance.

Structural design shall provide for piping and component heat-up from ambient to refueling and hot standby temperatures.

9.5.1.3.2 Transient Structural Requirements

The intermediate sodium processing subsystem shall be designed to accommodate the thermal transients resulting from the normal and abnormal

conditions in the IHTS. The primary sodium processing system shall be designed to accommodate the thermal transients resulting from normal, upset, emergency and faulted conditions which may occur during reactor refueling and operation.

The intermediate sodium processing subsystem shall be designed to accommodate the pressures and temperatures imposed by a major sodium/water reaction.

9.5.1.3.3 Natural Phenomena

The intermediate auxiliary liquid metal system shall be designed for seismic and other natural phenomena in accordance with the Uniform Building Code (UBC). The system shall be constructed to remain operable following an Operation Basis Earthquake (OBE).

The primary auxiliary liquid metal subsystem systems shall be designed for seismic and other natural phenomena in accordance with Section III of the ASME code. The systems shall be designed Seismic Category I Nuclear Components and shall be constructed to remain operable following an OBE and to withstand the effects of a Safe Shutdown Earthquake (SSE) and remain operational during the SSE.

Five OBEs, with 10 maximum peak response cycles each, shall be assumed to occur over the design life of the plant. Four OBEs shall be assumed to occur during the most adverse normal operation, and one during the most adverse upset operation determined on a component and design limit basis.

One SSE with 10 maximum peak response cycles shall be assumed to occur over the design life of the plant and shall be assumed to occur during the most adverse normal operation determined on a component and design limit basis.

9.5.1.3.4 Materials of Construction

Construction materials for the piping and components wetted by sodium or sodium vapor shall be Type 304 or 316 austenitic stainless steel.

Materials having equivalent corrosion resistance and mass transfer properties may be used in such areas as valve seats, bearings, or other areas requiring special materials due to mechanical functional requirements.

The system insulation materials shall be compatible with sodium at the maximum expected sodium temperature such that they do not add significantly to the potential reaction between sodium and air and the resulting reaction products shall not degrade the plant materials. Off-gases from the insulation shall be chemically non-reactive with other plant materials.

Factory fabrication and assembly shall be utilized to reduce field construction and field QA/QC labor and thus, reduce the overall cost of the plant. Fabrication and assembly at the site shall be minimized. Equipment shall be modularized to the extent feasible to minimize cost.

The auxiliary liquid metal systems shall be designed to minimize the probability and effect of fires. Non combustible and heat resistant materials shall be used whenever practical.

9.5.1.4 Configuration Design Requirements

A service life of 60 years shall be used as a basis for all components covered by this design description. Those items which cannot be expected to last the 60 year life of the plant shall be either sufficiently redundant or easily replaceable so that plant availability is not affected adversely.

The ISPS shall consist of nine independent circuits, each designed to purify the sodium contained in its respective IHTS loop.

The equipment arrangement in the ISPS shall be such that sodium spills, leaks, or fires will not propagate and cause damage to the IHTS loops or other major plant systems.

There shall be no permanent connections between primary sodium components and intermediate sodium components.

The ISPS shall be designed to permit gravity fill of the suction of the intermediate sodium cold trap pump from the IHTS loop or SDT. (This will require locating the pump in the steam generator silo below the steam generator rather than in the cold trap equipment vault).

All components involved with the receiving and transfer of sodium shall be portable.

The primary sodium storage tank shall be located in the equipment drain tank vault in the reactor building and shall be used only for drainage of a reactor vessel.

All sodium free surfaces shall be blanketed with an argon gas except for the reactor vessel which shall be helium cover gas.

The primary and intermediate auxiliary liquid metal systems shall not be responsible for any decay heat removal operation.

9.5.1.5 Design Safety Requirements

The auxiliary primary liquid metal systems shall be designed to function as a nuclear safety related systems because they contain radioactive sodium. In addition, the PSPS is an extension of reactor containment when in operation.

Nuclear safety-related systems and components shall be designed to withstand the effects of accidents, such as missiles, pipe whipping and discharging fluids that may result from equipment failures or from events and conditions outside the system.

9.5.1.6 Instrumentation and Control Requirements

Specific functional instrument and control equipment requirements include the following:

1. Sense process conditions, such as temperature, pressure, flow, level, valve position, and equipment status.
2. Provide for control valve operation, where required.
3. Provide cold trap crystallizer temperature and sodium flow control.
4. Provide temperature protective interlock circuits for all EM pumps and sodium cold traps.
5. Provide annunciation and signals for the plant control system (PCS) annunciators in the event of abnormal system conditions.
6. Provide appropriate signals to the plant control system for diagnostic and performance evaluation purposes.

Complete measurement systems, including sensors, signal conditioning equipment, indicators, power supplies, annunciators, logic circuits and panels, and cabinets shall be supplied.

Annunciation shall be provided for conditions which would result in freezing or plugging of a cold trap, and for conditions which could result in release from the cold trap of sodium oxide or other impurities.

Local control of winding voltage shall be provided for all EM pumps. Control shall be by a device that provides a voltage proportional to a demand signal from a manual or automatic controller. Controls shall be provided for remotely activating the EM pump power circuit and the fan motor required to cool the pump windings. Interlock circuits shall be provided to prevent overheating the pump duct and pump windings and activating EM pump power, unless the voltage demand is set below a preset minimum value.

Instruments and controls shall be arranged on the control panels or ease of operation and utilization. All instruments and controls shall be identified (labeled) and be easily read and interpreted. All panels and associated instrumentation equipment shall be mounted in metal cabinets which enclose the backside of the panels.

Local panels shall be located as close as practical to, and in the same building as, the system being monitored and controlled. Control of all auxiliary liquid metal subsystems shall be from local panels with select operating parameters recorded in the plant control area.

An annunciator shall be provided which gives both an aural and visual alarm, and an indication of the condition causing the alarm, for each of the following:

1. Any condition requiring operator action to prevent possible system or component failure or to mitigate the consequences of a failure.
2. Any condition which could result in potential system or component damage.
3. Any condition requiring operator action to correct system or component off-normal operation.
4. Any condition in which an automatically controlled variable fails outside of preset limits (either high or low).

The annunciators shall be mounted on the same panel, or on a panel immediately adjacent to the panel, that provides the controls used to correct or mitigate the consequences of an annunciated condition.

Panel instrumentation and controls shall be designed to perform their functions with the environmental conditions given in Tables 9.5-2 and 9.5-3. Sensors, control valves, and valve instruments shall be designed to withstand, without loss of function, the conditions induced by the process being measured. The process conditions as listed in Table 9.5-1 apply to the following instruments:

1. Magnetic flowmeters
2. Liquid metal temperature sensors
3. Liquid metal pressure sensors
4. Valves, valve actuators, and valve instrumentation

The performance characteristics of the instrumentation and controls of each subsystem of the auxiliary liquid metal system shall be capable of being monitored or tested at all times, to indicate maloperation and incipient failure of components or systems.

Calibration requirements shall not interfere with normal operation of the plant.

Instrumentation and controls components which perform similar functions shall be commercially available and standardized, as practicable, to provide maximum interchangeability and flexibility in order to simplify system maintenance. This requirement shall not preclude the use of new designs, where substantially improved performance will result therefrom.

Redundant instrument sensors, heaters, leak detectors, and other auxiliary items shall be provided where access to specific areas will be limited or prohibited by expected radiation levels and where specific design features may prohibit convenient access for maintenance.

9.5.2 System Description

9.5.2.1 Summary Description

The auxiliary liquid metal system receives, transfers, and purifies all sodium used in the plant. The system furnishes the required sodium quantity at the pressure, temperature, flow rate, and purity specified by the interfacing systems. The system is comprised of the necessary equipment and facilities to receive, purify, and transfer the plant sodium. The system equipment includes sodium melt stations, filtration units, pumps, blowers, heat exchangers, and cold traps as well as the necessary piping, supports, valves, instrumentation and controls to complete the installation. The system is comprised of the following subsystems:

1. Sodium Receiving and Transfer Subsystem (SRTS)
2. Intermediate Sodium Processing Subsystem (ISPS)
3. Primary Sodium Processing Subsystem (PSPS)

The sodium receiving and transfer subsystem (SRTS) provides for the initial fill of all plant sodium systems. The principal function of the subsystem is to melt the fresh sodium received for each reactor module solidified in tank cars, purify, and transfer it to the intermediate heat transport system (IHTS), which is located in the steam generator building. The SRTS is a portable system on a railroad car and is moved from module to module as needed. Only one subsystem is required for the plant.

The intermediate sodium processing subsystem (ISPS) provides for the purification of the sodium in the IHTS. The ISPS is comprised of an EM pump, an air-cooled cold trap, and interconnecting piping and valves. The EM pump takes suction from the IHTS cold leg, circulates 120 gpm through the cold trap and returns it to the IHTS expansion tank. Each IHTS loop is provided with a separate, independent purification system. The ISPS cold trap system continuously purifies IHTS sodium during all modes of IHTS operation. Connections are provided to allow for the transfer of sodium between the IHTS loop and the sodium dump tank (SDT) and for the purification of sodium stored in the SDT. Prior to plant startup, the ISPS is temporarily connected to the reactor vessel to allow for the initial fill of fresh primary sodium from the SDT.

The PSPS is responsible for the purification of primary sodium as well as for the transfer and temporary storage of primary sodium during periods of reactor module replacement. The system is comprised of three EM pumps and a nitrogen-cooled cold trap, along with interconnecting piping and valves. Each PSPS cold trap is connected independently to three (3) reactor modules and a submerged EM pump in each reactor module provides sodium flow to the PSPS cold trap. Primary sodium purification is performed after initial sodium fill and during refueling shutdown periods. Primary sodium requiring temporary storage external to the reactor vessel is transferred by a PSPS EM pump and by cover gas pressure to the Primary sodium storage vessel (PSSV) located in the reactor building.

9.5.2.2 Sodium Receiving and Transfer Subsystem

The sodium receiving and transfer subsystem provides the sodium required by PRISM. For each nuclear steam supply system (NSSS) the sodium receiving and transfer subsystem provides the capability to melt the contents of a sodium tank car or sodium drum, filter it, and transfer it to the ISPS EM pump located in the steam generator building (SGB). A schematic diagram of the system is shown in Figure 9.5-1 and a plot plan of the sodium unloading station is shown in Figure 9.5-2. The system includes the following components:

1. Sodium Tank Car Oil Heater Station
2. Fresh Sodium Filters
3. Sodium Drum Unloading Station
4. Interconnecting Piping and Valves

The capability to take a core sample of solid sodium from a tank car or drum is provided as required by the impurity monitoring and analysis system.

9.5.2.2.1 Sodium Unloading

A mobile tank car receiving station is provided to melt sodium which is received at each steam generator building solidified in railroad tank cars of approximately 10,000-gallon capacity. An oil-fired sodium tank car oil heater station heats and circulates hot oil through the tank car channels to melt the sodium and heat it to 300°F for transfer.

The tank car is temporarily connected to the fresh sodium fill line to allow sodium transfer from the tank car to the ISPS EM pump suction line. Removable sections of lines (spool pieces), as indicated in Figure 9.5-1, are installed in the line prior to the transfer operation. After sodium transfer is completed, the spool pieces are removed in order to facilitate the mobility of the receiving station.

A drum unloading station is provided to supply small quantities of sodium to the various systems as needed, following initial fill of the sodium systems and subsequent operation. The station is provided with an electrical, clamshell-type heater capable of melting the contents of two sodium-filled drums of approximately 55-gallon capacity, and provisions are made for connecting the fresh sodium fill line to the drum for transfer operations.

Following melting, the tank car sodium is transferred to the ISPS by initial pressurization of the tank car with argon to establish flow (approximately 5 psig), followed by gravity drain of the sodium tank car with a small positive pressure (approximately 2 psig) maintained. The system is sized to provide a drain rate from the tank car of approximately 50 gpm, which will empty a tank car in about four hours. During transfer, the sodium is filtered by one of the two filters to remove particulate matter.

All sodium piping is insulated and is electrically preheated to a temperature of approximately 300°F during sodium transfer.

9.5.2.2.2 Sodium Removal

If necessary, non-radioactive intermediate sodium can be removed from the plant using the ISPS EM pump. Transfer of sodium out of the intermediate system to a tank car or to drums for off-site disposal is done through the same lines provided for initial fill. During this operation, the filters, or filter elements, are removed. The system fill lines are not used for the removal of radioactive primary sodium.

9.5.2.3 Intermediate Sodium Processing Subsystem (ISPS)

9.5.2.3.1 ISPS Arrangement

The intermediate sodium processing subsystem provides continuous purification of IHTS sodium, as well as performs the initial fill operation

for both the IHTS and reactor vessel. Each IHTS loop is equipped with its own ISPS, which is comprised of the following components:

1. EM Pump
2. Cold Trap (Economizer Plus Crystallizer)
3. Cold Trap Air Blower
4. Interconnecting Piping and Valves

The cold trap and air blower are located in the cold trap equipment vault in the SGB near grade level for ease of maintenance and replacement. The EM pump is located 88 feet below grade and below the SDT to ensure sufficient suction head (NPSH) under all modes of operation. The ISPS piping connects to the IHTS at the cold leg upstream of the IHTS sodium pump near the steam generator and at the IHTS expansion tank. Remote operated isolation valves are located at each interface.

Besides the main loop flow from the IHTS, other systems are required to interface with the ISPS to satisfy the operational needs of PRISM. Connections are provided to allow for the transfer and/or purification of sodium contained in the sodium dump tank (SDT). A supply line to the SDT is connected to the ISPS main piping at a point downstream of the cold trap. A drain line from the SDT feeds into the ISPS at the suction side of the EM pump. Both lines are equipped with double isolation valves, which are normally closed. The ISPS piping is also connected to the sodium monitoring and sampling system (in the impurity monitoring and analysis system) to allow for the measurement of IHTS sodium purity.

A temporary connection in the EM pump suction line is provided for the ISPS to receive fresh sodium from tank cars or drums. Another connection is located downstream of the cold trap to allow a temporary connection for the initial fill of the reactor vessel with fresh sodium or to transfer sodium from the IHTS to tank cars.

9.5.2.3.2 IHTS Purification

The ISPS is responsible for providing continuous purification of intermediate sodium during all modes of IHTS operation, including normal operation, hot standby, and refueling. Sodium is extracted from the IHTS cold leg at a constant rate of 120 gpm by the ISPS EM pump, circulated through the cold trap to remove impurities, and then returned to the IHTS expansion tank. The ISPS operating conditions are indicated on the process flow diagrams shown in Figures 9.5-3 and 9.5-4 for IHTS normal and refueling conditions.

The ISPS normally operates continuously due to the constant sources of oxygen, hydrogen, and tritium leakage into the IHTS. Oxygen and other impurities enter the IHTS with the argon cover gas at the pump and expansion tank and at the pump seal which is purged with argon. The existence of over 2 ppm of oxygen can have a detrimental effect on the operation of the IHTS leak detection system. The hydrogen source results from corrosion in the steam generator tubes; most of this hydrogen diffuses through the tubes into the sodium and reacts to form sodium-hydride; its concentration in the IHTS should be maintained below 0.2 ppm. Tritium is transferred into the IHTS from the reactor system by diffusion through the IHX. Because the primary sodium is not purified continuously during normal plant operation, virtually all the tritium produced in the reactor will diffuse into the IHTS.

9.5.2.3.3 Sodium Systems Fill Operation

The ISPS is used to perform the initial fill of both the primary and intermediate plant sodium systems. After fresh sodium is drained from tank cars at the sodium receiving station, it is transferred by the ISPS EM pump to the SDT directly for temporary storage until a system charge has been unloaded. Sodium which is held in the SDT is circulated through the intermediate cold trap by the ISPS EM pump in order to remove impurities in the sodium collected from the inner surface of the tank. The operating conditions for this process are indicated in Figure 9.5-5. After SDT purification has been completed, the sodium is transferred to either the

reactor vessel or IHTS using the ISPS EM pump. IHTS fill is accomplished by pumping the fresh sodium through the ISPS loop into the IHTS expansion tank. Reactor vessel fill is facilitated by temporarily connecting a supply line to the ISPS. Fresh sodium is pumped from the SDT to the reactor vessel using the ISPS EM pump. Upon completion of the fill operation, the reactor sodium supply line is disconnected to prevent any further interface between primary and secondary sodium systems.

9.5.2.3.4 IHTS Drain

Sodium in the IHTS can be transferred to the SDT for temporary storage during IHTS maintenance using the ISPS. Sodium can also be added to the IHTS from the SDT sodium heel using the ISPS. This operations consists of pumping from the IHTS low point to the SDT to drain the system and pumping from the SDT to the expansion tank to refill the IHTS. The sodium can also be cold trapped while in storage in the SDT and/or during the transfer operation.

9.5.2.4 Primary Sodium Processing Subsystem (PSPS)

9.5.2.4.1 PSPS Arrangement

The primary sodium processing subsystem provides purification (cold trapping) and storage for sodium used in the reactor vessel. A single purification system cold trap is used for each group of three adjacent reactor modules (one power block). Each reactor module has a submerged 60 gpm sodium pump to provide circulation through the PSPS. The PSPS services each of the three reactors independently with no direct interactions. Double isolation valves with interlocks are provided to assure sodium is not inadvertently pumped from one reactor module to another. Primary sodium purification occurs during reactor refueling shutdown periods. Prior to initial plant startup, the PSPS is used to purify the fresh sodium in order to "clean" the internals of the reactor vessel. As a result of this intermittent operating schedule, a single purification system is sufficient to service three reactor modules. The PSPS is hardened (seismic

category 1) and is designed to handle primary sodium outside the confines of the reactor vessel during refueling operation. The system is comprised of the following components:

1. EM Pumps (one per Reactor Module)
2. Cold Trap (Economizer Plus Crystallizer)
3. Nitrogen Supply Tank
4. Nitrogen Blower
5. Nitrogen-to-Air Cooler
6. Air Blower
7. Interconnecting Piping and Valves

A schematic diagram of the primary sodium purification system is shown in Figure 9.5-6. The system uses a nitrogen-cooled cold trap to purify the sodium with forced circulation of 60 gpm provided by the submerged EM pump located in the reactor vessel. The closed nitrogen system is used as the cooling medium to prevent any possible interaction in the cold trap between radioactive sodium and air in the event of a sodium leak. In addition, all components and piping which handle primary sodium are contained inside a shielded cell.

The PSPS pump discharge line and return line are routed from beneath the primary sodium surface in the reactor vessel through the reactor head access area and pipe tunnel out to the PSPS shielded vault, which is located at the west end of the reactor building. Double isolation valves are located inside each of the reactor head access areas as well as within the primary sodium service building in order to minimize the very unlikely escape of sodium to the outside environment in the event of a leak.

The plant has three primary sodium service vaults (one for each power block) which house the primary sodium purification systems and associated auxiliaries. Each vault consists of a below grade structure housing the major components (the cold trap) and above grade air intake and exhaust for the air/nitrogen cooler.

The below grade, tornado hardened, seismic Category I structure is constructed of reinforced concrete with a thickness to accommodate shielding and/or structural requirements. This structure is about 25 ft by 62 ft in plan view, 24 ft high, and consists of a floor at elevation 27 ft and a roof at elevation 0 ft. A vault is provided in the first reactor building for housing the primary sodium drain tank, which is common to all reactor modules. This vault is about 25 ft by 25 ft, 24 ft high.

9.5.2.4.2 Primary Sodium Purification

The purification system is not operated until the bulk sodium temperature in the reactor vessel approaches the refueling temperature of 400°F. The PSPS sodium flow path is equipped with trace heating and is preheated to 400°F. Sodium from the reactor vessel is pumped by the submerged EM pump, circulated through the cold trap at a rate of 60 gpm, and discharged through a dip pipe into the reactor sodium near the lower head. The minimum sodium temperature in the crystallizer tank is controlled by varying the nitrogen flow through the cooling jacket. Heat transferred to the nitrogen in the cold trap is rejected to the atmosphere through the nitrogen-to-air cooler. A small percentage of the sodium flow (1 gpm) is diverted through a plugging temperature indicator (PTI) to establish cold trap operating parameters as well as determine overall sodium quality. The cold trapping operation is normally ceased when the oxygen concentration in the sodium is measured at 2 ppm.

The reactor sodium is maintained at approximately 400°F during refueling. Cold trapping at this temperature will remove any oxygen inleakage which occurs during the refueling operation as this oxygen will readily oxidize the sodium at the pool surface. Oxygen present on the surface of the newly installed fuel does not rapidly dissolve into solution until the sodium temperature increases to approximately 800°F; however, the amount of oxygen on the surface of 316 SS or HT-9 materials is small and will not appreciably affect the oxide concentration in the sodium coolant. For a refueling of seven fuel assemblies and nine blanket assemblies, a

total of 0.04 pounds of oxygen would be introduced into the primary sodium. This corresponds to an incremental oxygen content of 0.1 ppm in the sodium.

Continuous cold trapping is not necessary since the reactor is completely sealed under normal operation, during which time the impurity inleakage is negligible. The maximum allowable oxygen content in the primary sodium is 10 ppm during reactor operation to limit the corrosion to 1 mil or less during the 60-year life of the 316 stainless steel reactor system and during the four-year life of the HT-9 fuel pins.

The estimated amount of impurities absorbed into the reactor sodium throughout the first 60 years of reactor module operation is given in Table 9.5-4. Assuming complete removal by the cold trap of all impurities contained in the sodium, one 750-gallon cold trap will be adequate to service three reactor modules over a 60-year period with a 17% capacity factor.

In the unlikely event that purification of the reactor sodium becomes necessary during operation, the reactor will be shut down to hot standby condition and cold trapping will be performed.

9.5.2.4.3 Primary Sodium Storage

The primary sodium storage vessel (PSSV), located in the primary sodium service vault, provides a capacity sufficient to permit drainage at 400°F of the reactor vessel for module decommissioning at the end of the 60-year life. The PSPS EM pump and a temporary drain line are used to facilitate sodium transfer. The PSSV is preheated to 400°F and maintained at that temperature after transfer.

TABLE 9.5-1 - AUXILIARY LIQUID METAL SYSTEM STRUCTURAL DESIGN PARAMETERS

Subsystem or Component	Material	Applicable Codes and Standards Industrial Code	Applicable Codes and Standards Industrial Code Cases	Tornado Protection Required	Design Conditions Temp. (°F)	Design Conditions Pressure (psig)	Operating Conditions Steady State Temp. (°F)	Operating Conditions Steady State Pressure (psig)
All System 81 Components	-	-	-	-	450	Full Vacuum	-	-
Na Receiving								
Sodium Piping	SS	B31.1		No	450	100	300	2
Fresh Sodium Filters	SS	Sect. VIII, Div. 1		No	450	100	300	2
Valves	SS	B31.1		No	450	100	300	2
Tanks	SS	Sect. VIII, Div. 1		No	450	100	300	2
Intermediate Sodium Processing Subsystem								
Piping								
IHTS to EM Pump	SS	B31.1		No	650	300	540	42
Pump to Cold Trap	SS	B31.1		No	650	300	540	63
Cold Trap to IHTS	SS	B31.1		No	650	300	500	60
Cold Trap to SDT	SS	B31.1		No	650	300	400	50
SDT to Pump	SS	B31.1		No	650	300	400	10
Components								
EM Pump	SS	Sect. VIII, Div. 1		No	650	300	540	63
Cold Traps:								
Economizer	SS	Sect. VIII, Div. 1		No	650	300	540 (Inlet)	60
Crystallizer	SS	Sect. VIII, Div. 1		No	650	300	306.5 (Inlet)	60
Air Blowers	-	-		No	200	5	80	2
Valves	SS	B31.1		No	650	300	540	60
Primary Sodium Processing Subsystem Components								
EM Pump	SS	Sect. III, CL. 3		Yes	900	100	875	50
Cold Traps:								
Economizer	SS	Sect. III, CL. 3		Yes	900	100	875	50
Crystallizer	SS	Sect. III, CL. 3		Yes	900	100	875	50
Sodium Valves	SS	Sect. III, CL. 3		Yes	900	100	900	50
Storage Tank	SS	Sect. III, CL. 3		Yes	900	100	875	50
Piping								
Reactor to Cold Trap	SS	Sect. III, CL. 3		Yes	900	100	875	50
Cold Trap to Reactor	SS	Sect. III, CL. 3		Yes	900	100	875	50

TABLE 9.5-2

AUXILIARY INTERMEDIATE LIQUID METAL SYSTEM
OPERATING ENVIRONMENT

Composition	Air
Temperature	
Normal	50-115°F
Off-Normal	120°F Max.
Pressure	
Normal	Atmospheric
Off-Normal	N/A
Humidity	50% Relative
Radiation	NIL

TABLE 9.5-3

AUXILIARY PRIMARY LIQUID METAL SYSTEM
OPERATING ENVIRONMENT

Composition	Air
Temperature	
Normal	50-115°F
Off-Normal	120°F Max.
Pressure	
Normal	Atmosphere
Off-Normal	N/A
Humidity	50% Relative
Radiation	[TBD]

TABLE 9.5-4

PRIMARY SODIUM IMPURITY BURDEN PER REACTOR MODULE

Source or Activity	Oxygen (lbs)	Hydrogen (lbs)	Theoretical Volume of Na_2O + NaH ($In.^3$)
I. Initial			
A. Sodium	1.9	0.16	206
B. Piping/Vessel	8.6	1.0	1128
	10.5	1.16	1334
II. Operational			
A. New Surfaces/Cycle			
Fuel Cladding:			
(if) Stainless Steel	0.04	0.06	45
(if) HT-9	0.04	0.06	45
B. Inadvertent Air In-Leakage/Cycle	0.24	0.10	84
C. H_2 Core Generation/ Cycle		1.06	766
	0.28	1.22	845
III. Maintenance (60 Years)	13.0	1.5	1698
Total, 60 Years at 1 Cycle/2 Years	31.62	38.04	28,987

* Cycle refers to reactor refueling (every 2 years).

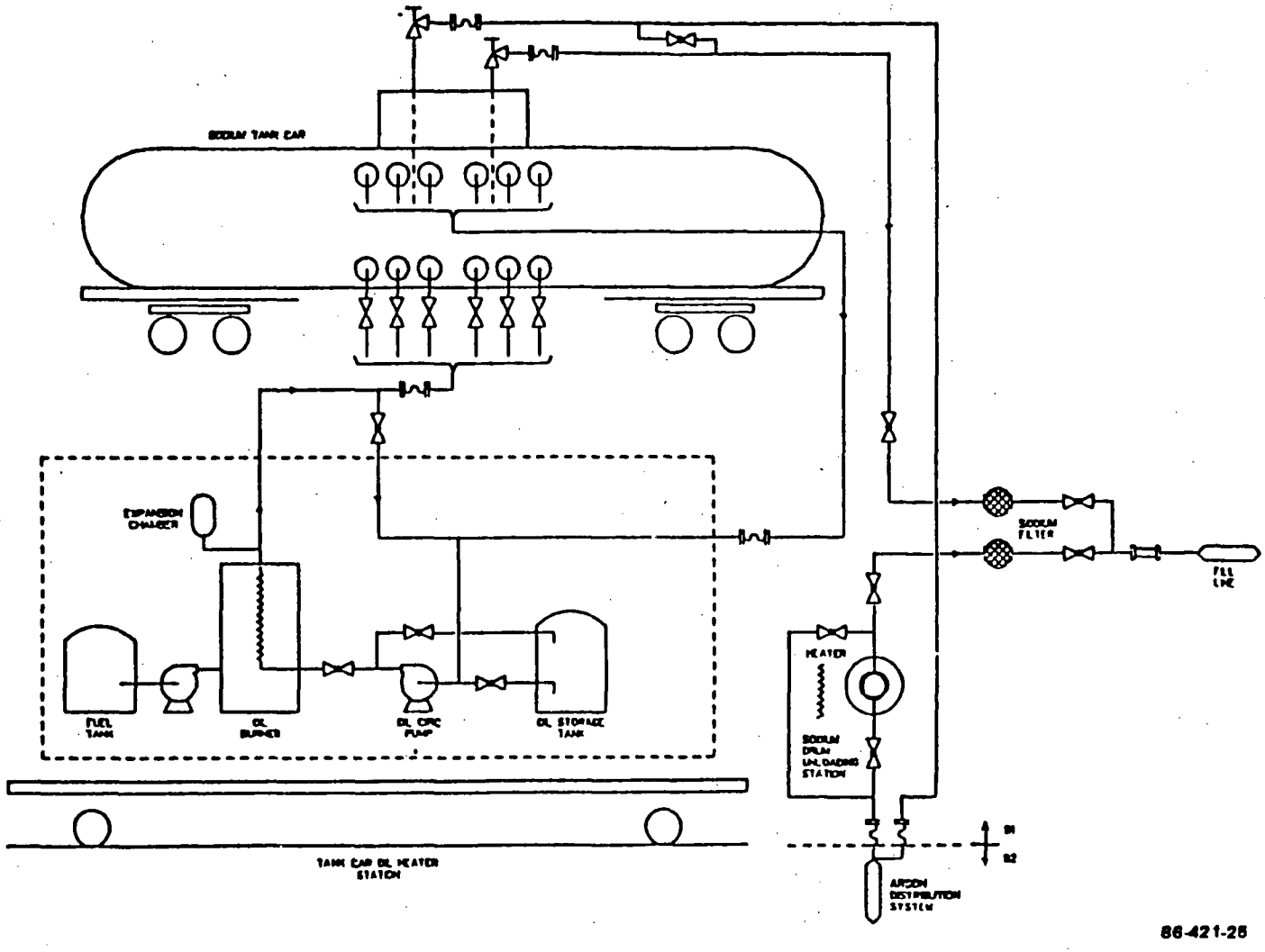

Figure 9.5–1 SODIUM RECEIVING AND TRANSFER SUBSYSTEM – SCHEMATIC DIAGRAM

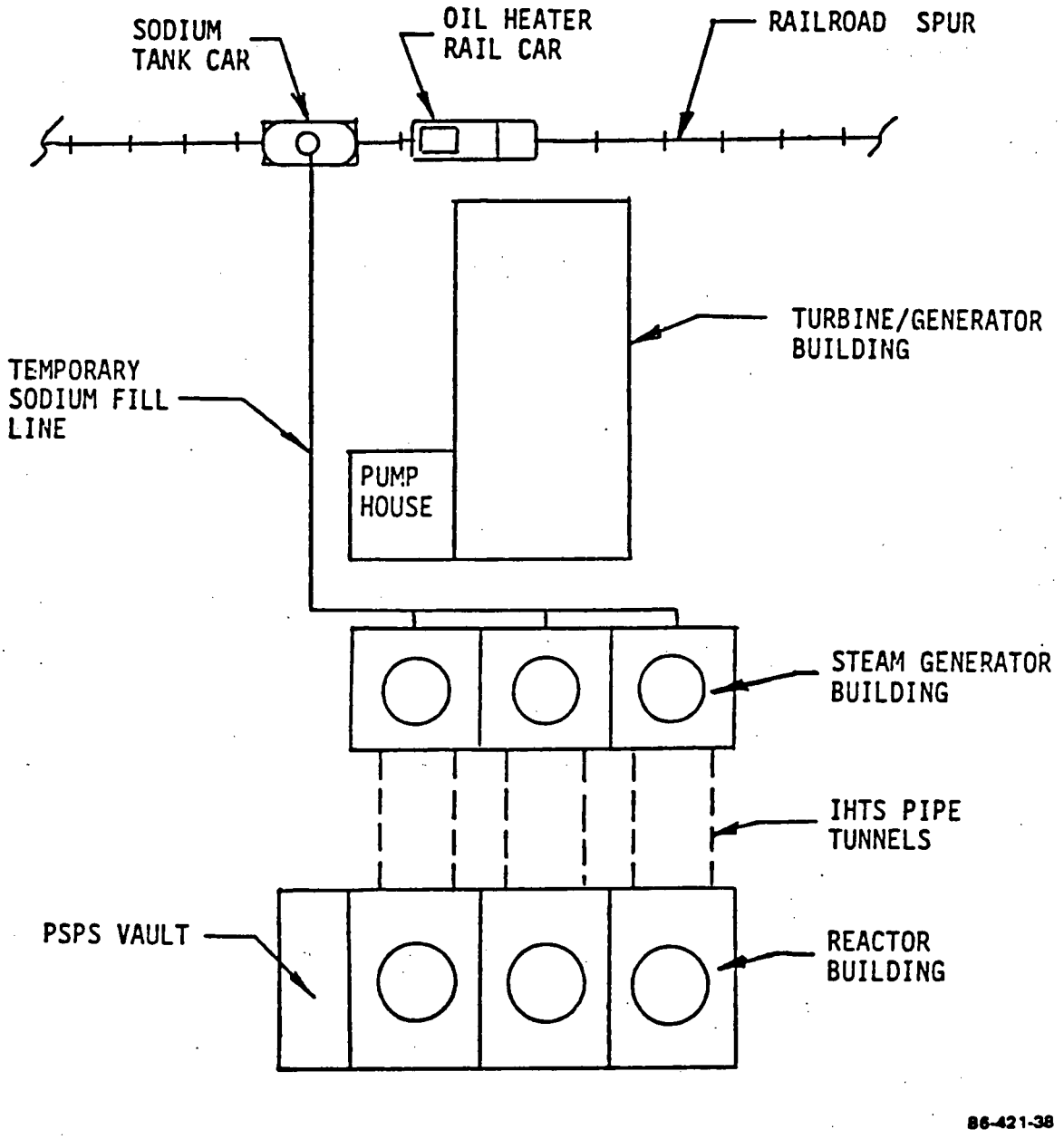

Figure 9.5–2 PLOT PLAN – SODIUM UNLOADING STATION

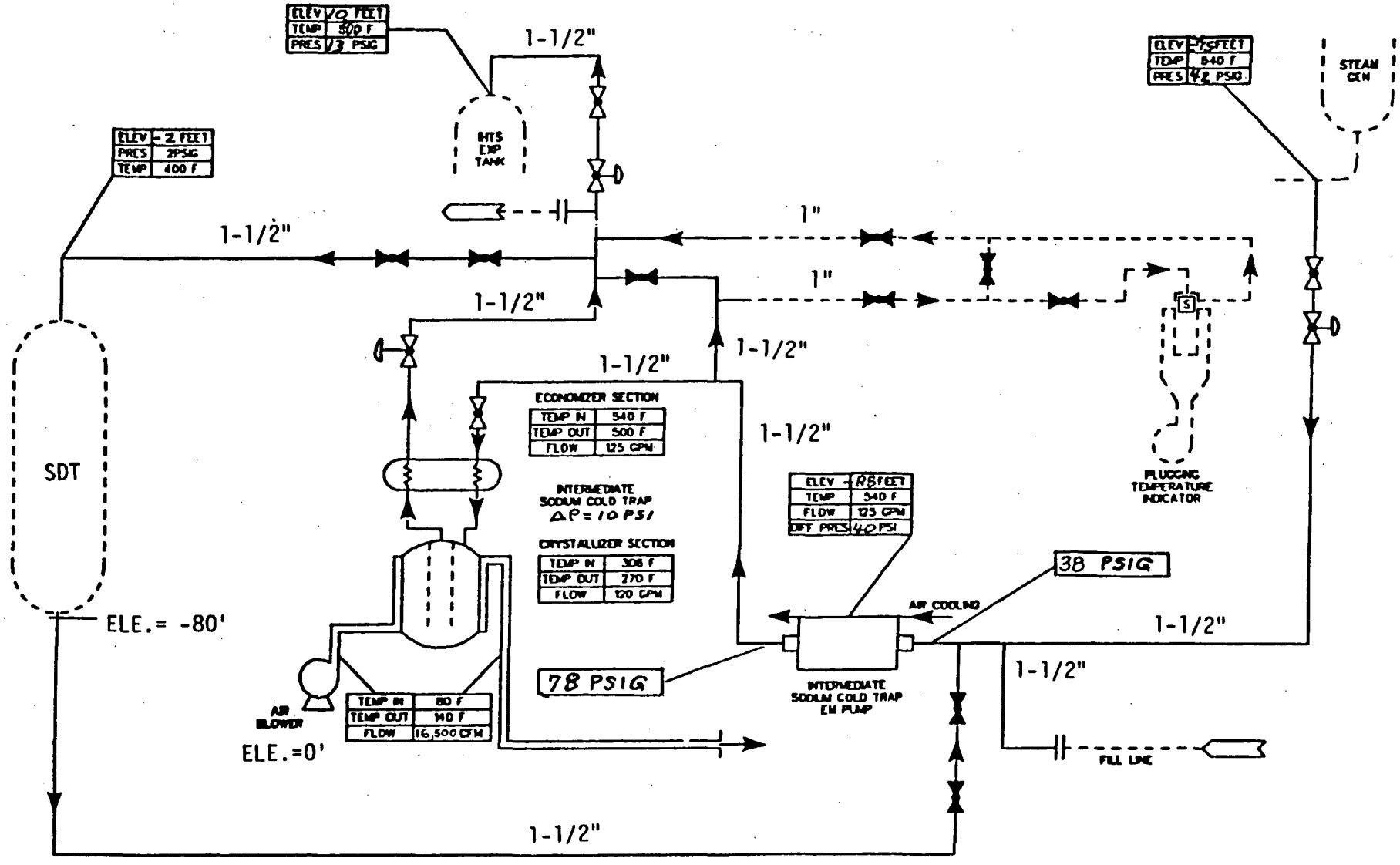

Figure 9.5–3 INTERMEDIATE SODIUM PROCESSING OPERATION – NORMAL OPERATION

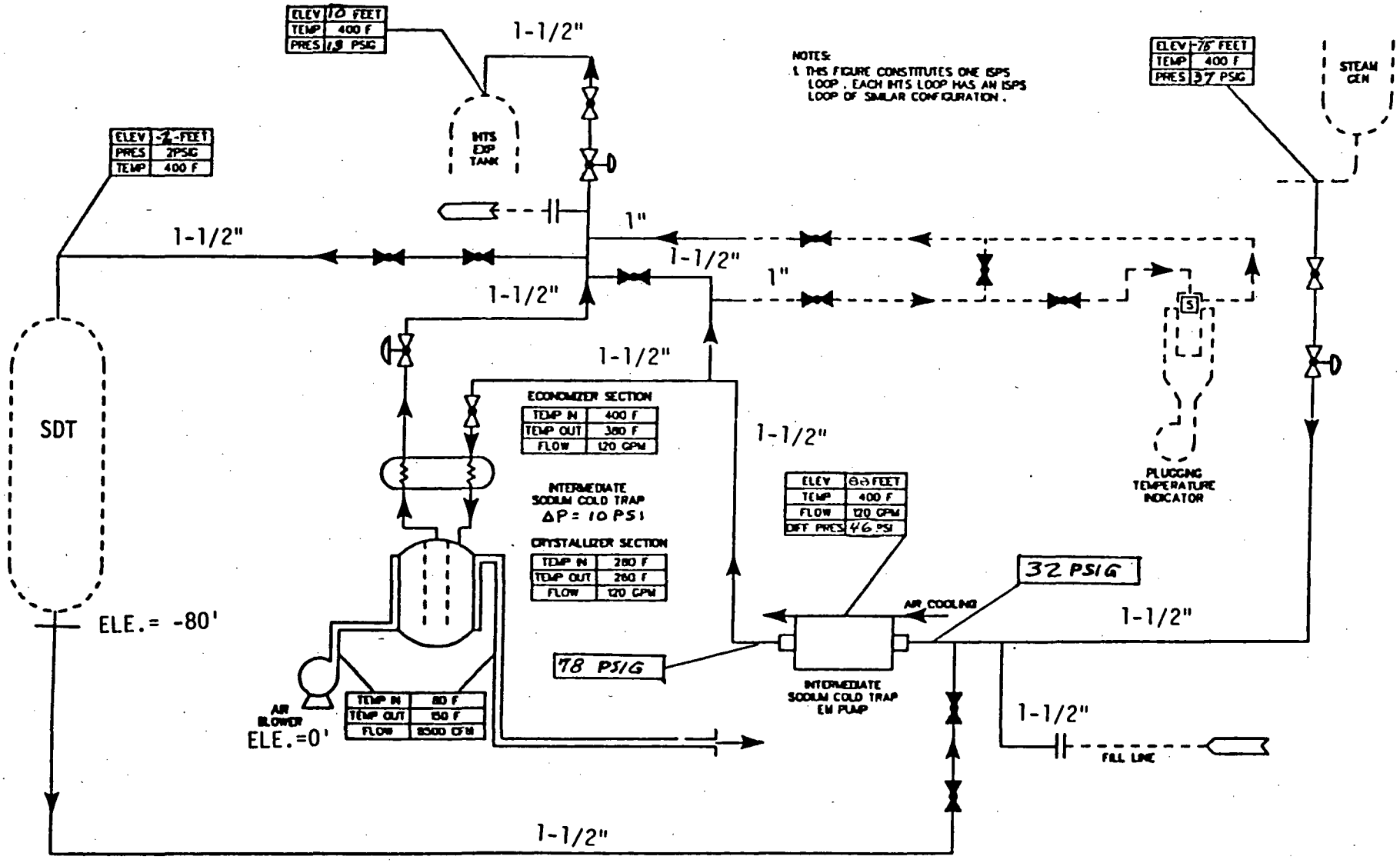

86-172-24

Figure 9.5–4 INTERMEDIATE SODIUM PROCESSING SYSTEM – REFUELING CONDITIONS

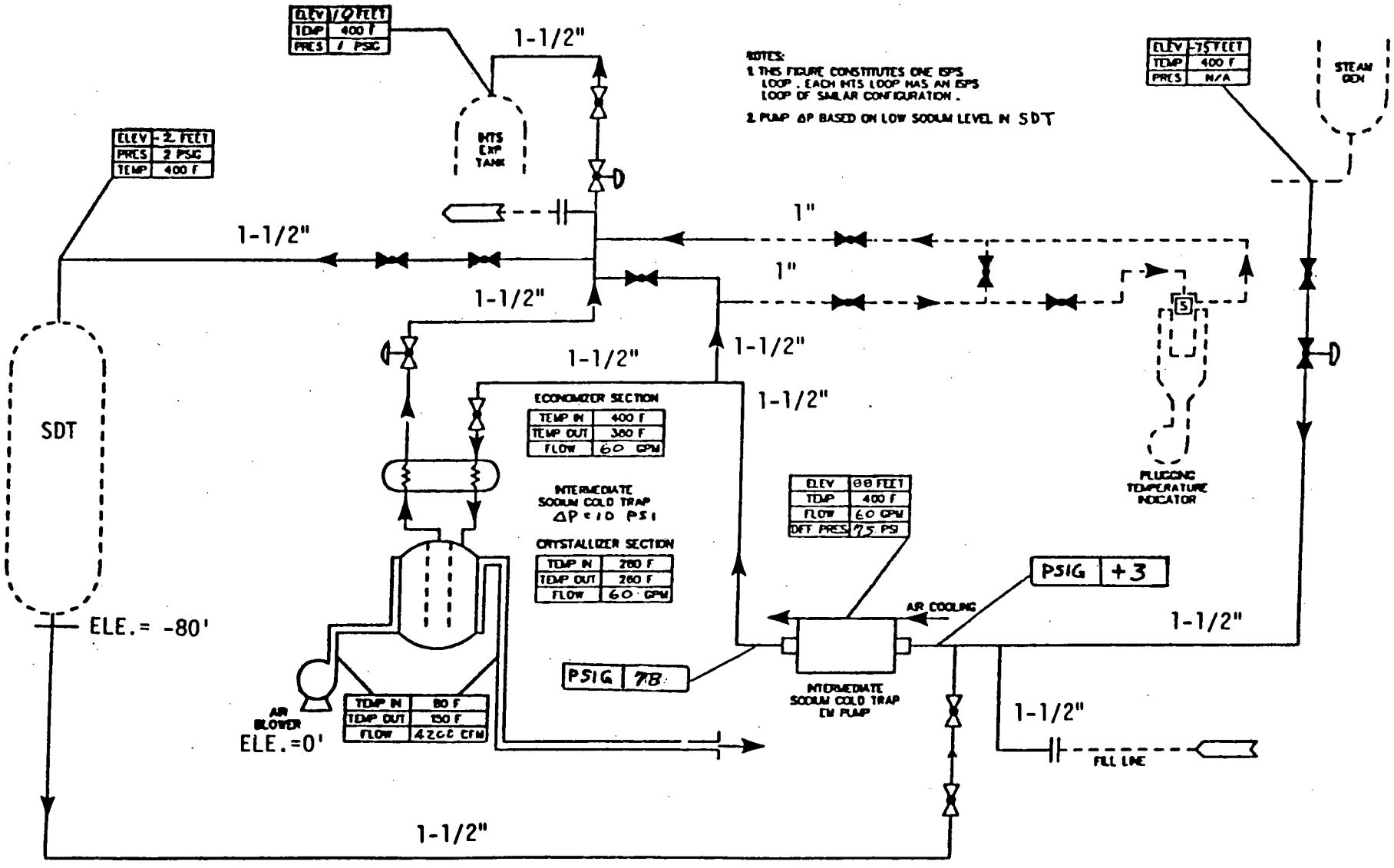

86-472-25

Figure 9.5–5 INTERMEDIATE SODIUM PROCESSING SYSTEM – SODIUM FILL OPERATION

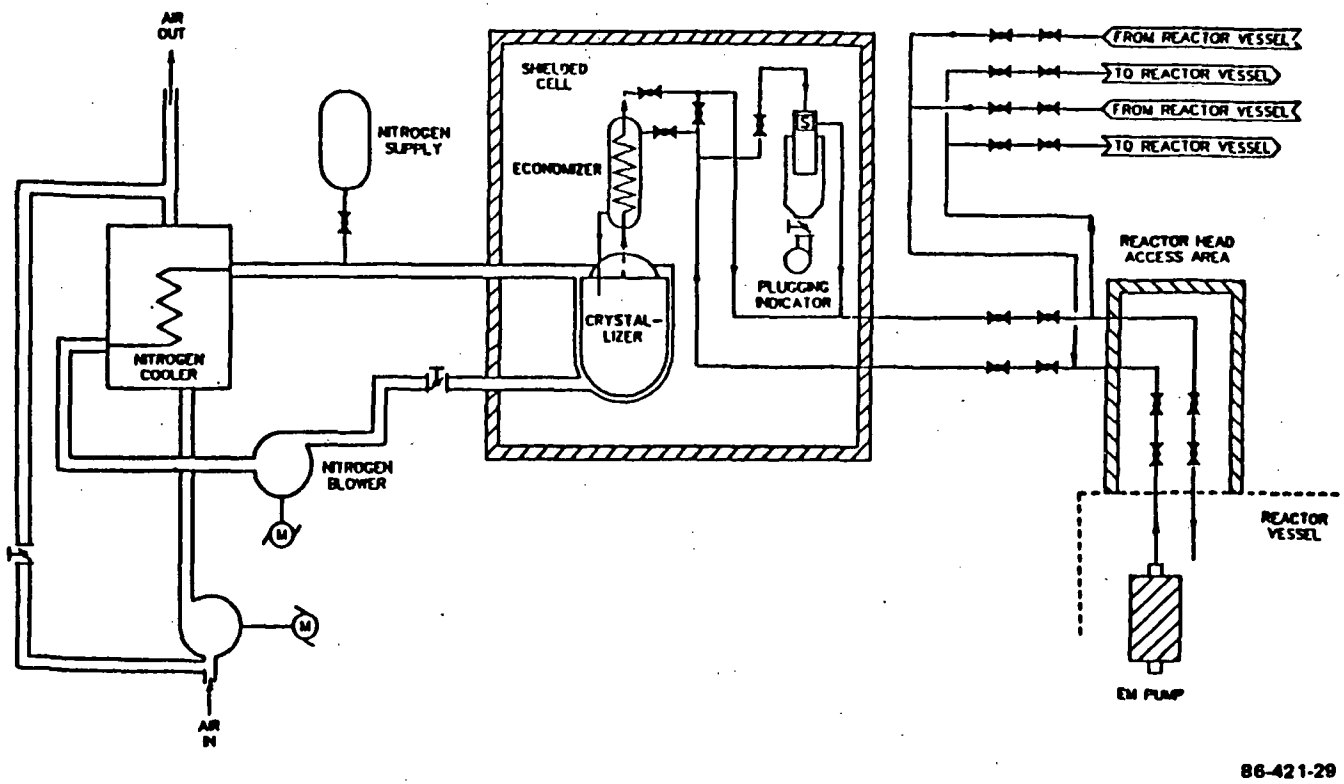

Figure 9.5–6 PRIMARY SODIUM PROCESSING SUBSYSTEM – SCHEMATIC DIAGRAM

9.6 Sodium Piping and Equipment Heating and Insulation Systems

The sodium piping and equipment heating and insulation system provides piping and equipment insulation and insulation hardware, electrical resistance-type heaters, heater mounting devices, electrical power controllers, temperature sensors, and temperature controlling instrumentation required to insulate and heat the sodium containing components. This system also provides a gas heating system for preheating the reactor vessel prior to sodium loading.

9.6.1 Design Bases

9.6.1.1 Functions

The sodium piping and equipment heating and insulation system provides the following heating and insulation functions for those process systems that contain sodium (liquid metal or vapor) for routine operation of the plant:

1. Preheat the sodium process systems solid metal parts, at controlled heat up rates, before the systems are filled with liquid metal sodium, from ambient conditions up to 450°F
2. Heat the sodium process systems from plant extended shutdown conditions to reactor operating conditions, in accordance with prescribed heat up rates, with the process systems filled with sodium
3. Maintain sodium system temperature at 400°F (minimum)
4. Heat sodium piping and components indefinitely at prescribed conditions, overcoming all heat losses, either from normal heat leakage paths and ongoing process functions, and accounting for heat sources such as the reactor core decay and the heat from operating pumps
5. Control heat to melt, sequentially, the frozen sodium, resulting from planned or unplanned casualty events, without damage to equipment due to sodium thermal expansion

6. Insulate to limit piping and equipment heat losses to the building and maintain insulation surface temperatures within acceptable limits

9.6.1.2 Design Requirements

The sodium piping and equipment heating and insulation system shall be designed to provide insulation and trace heating for all liquid metal piping and components. Additional requirements are as follows:

1. Connected equipment shall be heated at similar heating rates such that temperature differences are minimized and kept within design limitations.
2. Thermal stress levels in the heated equipment shall be accounted for in establishing the maximum allowable unheated length of piping and unheated areas of vessels.
3. The heating system shall be designed such that its failure will not impair the safety function of associated systems and components.
4. The insulation system shall limit the piping and equipment heat losses to the building to values consistent with the capabilities of the plant HVAC system.
5. Outer insulation surface temperature shall be maintained below 140°F in those locations where personnel access is possible.
6. All electrical heaters shall be of the mineral insulated (MI) cable type.

9.6.2 System Description

The sodium piping and equipment heating and insulation system consists of the following:

1. Electrical trace-heating
2. Pipe and vessel insulation
3. Reactor vessel preheating system

The electrical trace-heating system provides power to heaters of the mineral insulated (MI) cable type. The MI cable is either wrapped around the component or piping or placed in zig-zag pattern on the surface of the component. The heat rates required by different components are controlled by thermocouples which monitor piping and component temperatures and adjust the power supplied to the heaters by means of temperature controllers and solid-state relays. The overall control is executed from local operator control centers. An additional master operator control center is located in the control center (control building) capable of monitoring, supervising and overriding any or all subsystems. Electric heaters are provided for most piping and equipment that contain sodium or sodium vapor as a matter of routine operation. Some applications, such as storage tank electric heat continuously during all phases of plant operation while other applications such as the IHTS, may require electric heat infrequently. The space containing the electric heater between the surface of piping and/or components inner insulation jacket, acts as an oven such that convection heating is a significant portion of the total heat transferred to components. Heaters located on the lower portion of larger components provide the most uniform heating. For smaller piping or components, the heaters are wrapped around the component. Tanks and large component heaters are arranged in banks. Heater banks are located to provide major heating at low points to lessen heat buildup potential.

The insulation system consists of an inner jacket of stainless steel, insulation layer of alumina silica insulation, and an outer protective jacket of stainless steel.

The reactor vessel preheating system utilizes two blower heater packages. They are both self-contained, portable package units used for initial reactor vessel fill. Both packages contain blowers, heaters, an oil storage tank, instrumentation, and controls.

9.7 Other Auxiliary Systems

9.7.1 Plant Fire Protection System

The plant fire protection system (PFPS) is comprised of two systems:

1. The sodium fire protection system (SFPS) which addresses sodium (Na) fires

2. The non-sodium fire Protection system (NSFPS), which addresses fires of non-alkali metal origin or involvement

9.7.1.1 Design Bases

9.7.1.1.1 Functions

The PFPS provides the means to prevent, control, and mitigate the consequences of plant fires through the following functions:

1. Detects fires, or incipient fires, by automatic response to abnormal amounts of aerosol, smoke or heat
2. Activates alarms to alert personnel of the existence of fire and its location
3. Suppresses fires by minimizing the availability of combustion supporting atmospheres
4. Extinguishes fires by activating automatic systems to discharge appropriate fire fighting agents
5. Isolates and confines fire and smoke by signaling the automatic closure of ventilation ducts
6. Protects safety related systems and components to assure continued readiness and operation
7. Protects plant personnel from Na fires
8. Limits the chemical reaction between Na and concrete
9. Limits the formation and release of radioactive sodium aerosols
10. Limits the release of non-radioactive sodium aerosols

9.7.1.1.2 Design Requirements

The PFPS shall be designed so that:

1. Inadvertent equipment operation or rupture does not result in loss of function of other plant structures, systems or components.
2. Fire protection water supply is capable of delivering rated flow of 2,500 gpm at 125 psig.
3. Hydraulically balanced automatic sprinkler systems and hydraulically designed automatic water spray systems are installed in all areas with high fire hazard potential.
4. Automatic low-pressure CO_2 total flooding systems are provided for normally unoccupied electrical equipment and cable spreading rooms.
5. Mechanical foam extinguishing systems for the fuel oil tank, yard hydrants, standpipes, hoses and hose connections are located at acceptable minimum distance apart as dictated by the fire hazard potential in the area in question.
6. Halon flooding is provided for the electronic equipment rooms.
7. Halon 1301 storage facilities provide two separate discharges within the largest single protected hazard area, and maintain a 5 to 6 percent concentration (by volume) for ten minutes within the largest single protected hazard area.
8. Main (electric motor driven) and standby diesel driven fire pumps are sized to provide the flow requirements for two-hour operation of the largest single automatic sprinkler or spray system plus simultaneous flow of 1,000 gpm for hose streams.
9. A jockey pump maintains fire protection water supply pressure at 115 psig.
10. Pumps are Underwriters Laboratories Inc. (UL) listed for fire protection services and rated at 125 psig.
11. Compliance with NFPA Standards is achieved.

The low-pressure CO_2 system shall achieve a 30 percent concentration in two minutes and 50 percent concentration in 10 minutes for a duration of 20 minutes.

In addition, all plant structures, systems and components shall be designed, arranged and located to minimize a potential fire hazard while maintaining compatibility with other plant requirements.

9.7.1.2 System Description

The PFPS provides prevention, detection, containment, control, suppression, extinguishment, and mitigation of consequences of plant fires.

The SFPS provides means to preclude public health hazards, as well as minimize property damage, in the event of a fire caused by the accidental leakage and exposure of sodium to an air atmosphere. Suppression of liquid sodium fires in an air atmosphere is accomplished by built-in, dedicated, passive systems for large spill fires or fires in normally unoccupied areas. Suppression of small fires is accomplished through manual fire fighting efforts using portable extinguishers distributed throughout the NI buildings.

Special requirements imposed by the presence of sodium in the plant result in employing special fire protection methods in the SFPS. These methods include:

1. Passive catch pans and fire-suppression decks
2. Manually operated, portable fire extinguishers

The NSFPS provides means for minimizing property damage, increasing personnel protection, and reducing loss of power generating capability, as a result of fires in buildings and areas of the plant which do not contain alkali metals. Water-supplied fire fighting systems are used in areas completely isolated from systems, equipment and components containing sodium. Total flooding or local application systems for carbon dioxide are used for normally unoccupied electrical cable and equipment rooms. Total flooding systems of Halon 1301 are used for the protection of electronic equipment rooms.

Detection of sodium and non-sodium fires is accomplished by smoke, aerosol, and/or heat detectors. These detectors actuate alarms to alert the plant operators of the existence and location of a fire. Where appropriate, heat detectors initiate the operation of automatic suppression systems.

The effectiveness of these fire protection methods for limiting fire losses and the spread of airborne contaminants is augmented by fire barriers, fire doors, fire dampers, low-leakage penetrations, and similar isolation devices provided by the building design and by the heating and ventilation system.

The NSFPS includes the following subsystems:

1. Fire protection water supply subsystem
2. Sprinkler, deluge, and water spray subsystems
3. Wet and dry standpipe subsystems
4. Carbon dioxide subsystem
5. Halon subsystem
6. Fire extinguisher
7. Foam subsystem

The fire protection water supply subsystem provides water to the wet standpipe systems and the yard hydrants. The raw water system supplies water to the plant fire protection system. The cooling tower basins provide a backup water supply. A simplified diagram of the fire water supply is presented in Figure 9.7-1.

The system pressure is maintained by the jockey pump. When system pressure falls to a pre-determined level, the electric motor driven pump is brought on-line. If system pressure continues to decrease below a minimum allowable, the diesel driven pump is brought on line. The diesel driven pump is sized to maintain system pressure when the motor driven pumps are inoperative.

The sprinkler, deluge, and water spray subsystem consist of the necessary water discharge devices, piping, valves, instrumentation and

controls located in those areas within the plant buildings and in the plant yard where the characteristics and severity of a potential fire indicate fire extinguishment in the form of water-supplied sprinkler, deluge and water spray systems.

The wet standpipe subsystem consists of piping, valves, other necessary components, instrumentation and controls in those areas within the plant buildings where standpipes are provided.

A dry standpipe subsystem is provided for manual fire fighting in non-alkali metal areas in the steam generator buildings and in areas of the reactor support buildings which contain access to liquid-alkali metal areas. A motorized valve isolates the system from the yard distribution fire main. The dry standpipe system is routed so it will be self-draining after use.

The carbon dioxide subsystem consists of low-pressure, refrigerated, insulated storage units, piping, valves, other necessary components, instrumentation and controls to provide automatic total flooding, together with manual application by CO_2 hose reels, in normally unoccupied areas of the plant containing electrical cabling and electrical equipment. Additionally, automatic local application of CO_2 is provided for steam turbine generator bearing protection in addition to steam turbine-generator purging.

A Halon 1301 subsystem consisting of pressurized storage cylinders, piping, valves, instrumentation and controls, provide automatic total flooding in areas of the plant containing electronic equipment and components.

Portable fire extinguishers include the necessary portable fire fighting equipment and are located throughout the plant for initial attack and manual fire fighting.

9.7.2 Communication System

The communication system is comprised of all communication subsystems and networks within the plant. This system shall provide capabilities for intra-plant communication and for inter-plant communication with substations, generating and power control facilities, during normal and emergency operation of the plant. In addition, this system shall support the plant security system, plant operation, maintenance and business functions during normal operation and provide means of communicating warnings and alarms to the plant-personnel and other facilities during an emergency.

9.7.2.1 Design Bases

9.7.2.1.1 Functions

The communication system performs the following functions:

1. Provides intra-plant communication for operating personnel working in different areas of the plant, including the Control Room, during normal plant operation
2. Provides communication required to support the maintenance, plant checkout and instrument calibration activities
3. Has capabilities for paging, communicating announcements and instructions to the plant personnel during normal operation of the plant, and for communicating warnings, evacuation instructions, high radiation and fire alarms during an emergency
4. Provides inter-plant data and voice communications with other substations, generating stations and power control centers, to support plant operation
5. Provides plant parameters and status under normal operating conditions
6. Provides a radio link for inter-plant communications when other systems are unavailable
7. Provides a portable two way communication system for maintenance operations and general plant communications

8. Provides intra-plant voice communications including private automatic exchange (PAX) phones with executive right-of-way feature, and portable radio communicators for the plant security system
9. Provides an independent voice channel to the off-site law enforcement agency for security use only
10 Provides a direct communication (data) link to the NRC

9.7.2.1.2 Design Requirements

The plant communication system shall be designed to include the following capabilities:

1. Provide inter- and intra-plant communications during all planned and unplanned modes of plant operation.
2. Provide voice communication between two or more plant locations, even in areas of extreme noise (greater than 90 dBA), during startup, normal operating and shutdown conditions
3. Be operational to perform warning and alarm communicating functions when all on-site and off-site ac power is not available
4. Avoid impairment of the operation of other subsystems upon failure of a subsystem or communication loop
5. Provide a portable system for two way communication
6. Avoid radio frequency interference (RFI) which could impair transmission of sensitive instrumentation and control (I&C) signals

9.7.2.2 System Description

The communication system is comprised of the following systems:

1. Public Address Intra-Plant Communication System (PA-IC)
2. Private Automatic Exchange (PAX)
3. Microwave Communication
4. Power-line Carrier Communication

5. Maintenance Communication Jacking (MCJ)
6. VHF Radio Station
7. Portable Radio System
8. PAX Operator's Console
9. Off-site Law Enforcement Radio
10. Security Portable Radio System

The PA-IC System, the primary intra-plant communications link, is a network of inter-connected telephone handsets, and loudspeakers located throughout the plant operating areas at convenient locations including the switchyards, pumphouses and control center. In areas of high ambient noise (approximately 90dBA level), supplementary red flashing lights are provided at visible locations to draw the attention of the operating personnel.

The PAX system is a network of touchtone-type telephone handsets located throughout the plant administrative areas and in the plant operating areas. It is connected to the following communications systems:

1. Commercial Telephone Company
2. Microwave Communication System
3. Power-line Carrier Communication System

The microwave communications system is the primary inter-plant communications link. The system includes a microwave radio and multiplex terminal equipment.

The power-line carrier communications system is an alternative means of inter-plant data and voice communications between PRISM and other generation and transmission facilities and control centers. The system includes a power-line carrier terminal utilizing single-side band modulation operating in the power-line carrier frequency band.

The maintenance communications jacking system is a network of telephone (PAX) and sound powered jacks located in or adjacent to the control panels or racks, to support maintenance and instrument calibration activities. The system includes headset/microphones with extension cables, plugs for the jack receptacles and interconnecting wiring. The VHF radio

station is provided to transmit emergency voice communications from the control center to other facilities. The system includes a base station transmitting and receiving in the VHF frequency range, and a remote channel control console located in the control room.

The portable radio system provides a portable two-way radio communications system to be used in all areas of the plant through walkie-talkies, with pager and voice actuated microphones that transmit a lower power signal.

The PAX operator's console provides a control system to handle telephone communication requirements. The console allows the operator to control PAX access to the outgoing trunk circuits.

The off-site law enforcement radio provides the plant security force with a dedicated communication link to the local law enforcement agency. The system is a VHF radio station with remote control consoles located in the central and secondary alarm stations. The power requirements for the off-site law enforcement radio are supplied from the security system uninterruptible power source.

The security portable radio system provides portable two-way radio communication system for the exclusive use of the plant security force. This system permits each security force member to be capable of maintaining continuous communication with the central and secondary alarm stations, access control station and security shift supervisor's office.

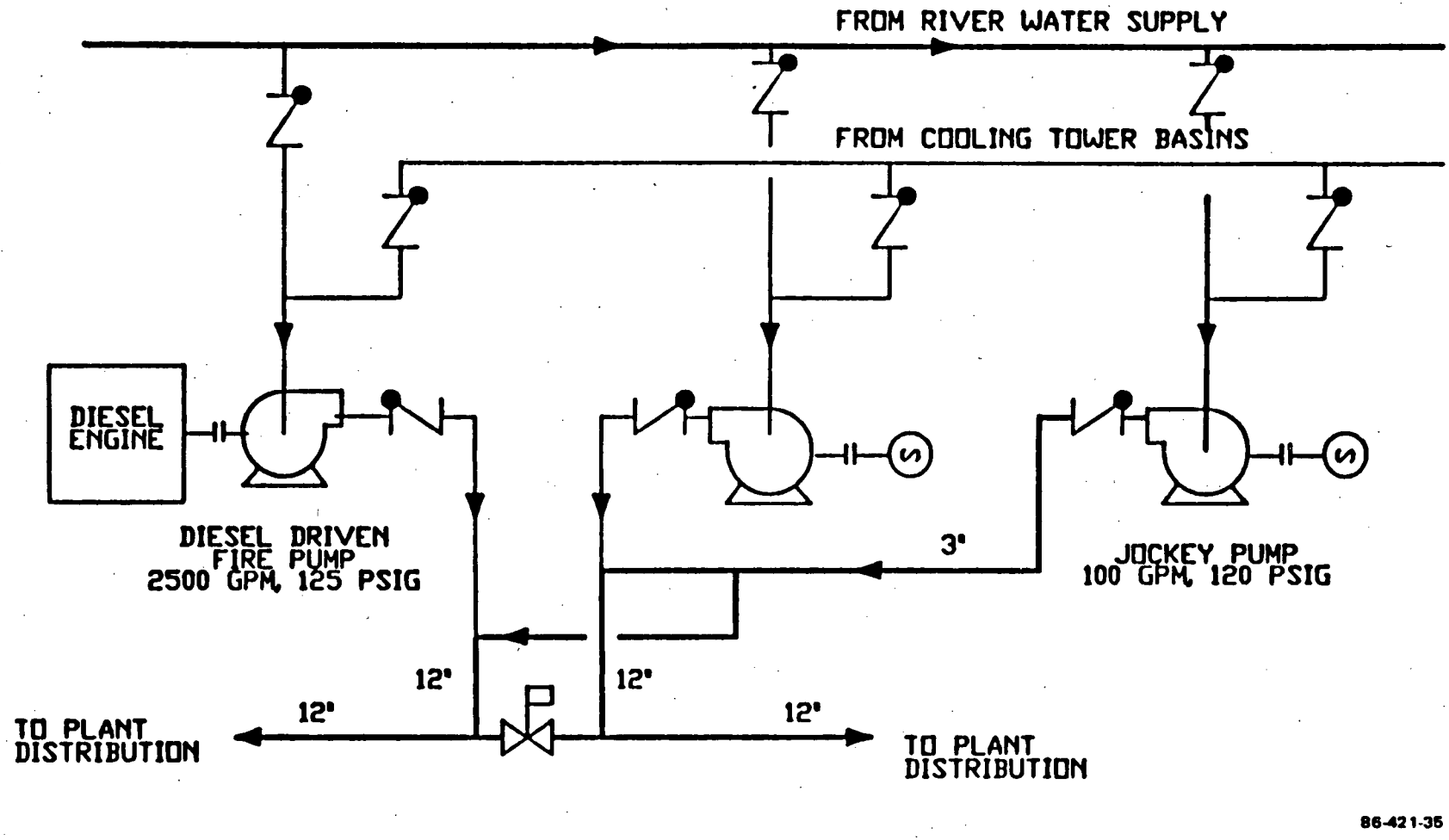

Figure 9.7–1 FIRE PROTECTION WATER SUPPLY SYSTEM FLOW DIAGRAM

CHAPTER 10
STEAM AND POWER CONVERSION SYSTEM

CHAPTER 10

STEAM AND POWER CONVERSION SYSTEMS

TABLE OF CONTENTS

LIST OF FIGURES

10.1

Chapter 10 STEAM AND POWER CONVERSION SYSTEMS

10.1 Summary Description

The steam and power conversion system is designed to convert the heat produced in the reactor modules to electrical energy. The operation of the equipment, piping, and valves in the system do not affect the reactor modules and their safety features. The PRISM plant is made up of three identical power blocks, each containing three reactor modules and one turbine generator (TG) system. The complete facility therefore employs nine reactors and three TG's, and generates 1245 MWe of electricity. Figure 10.1-1 shows a simplified flow diagram for one turbine-generator system. Near-saturated steam is supplied from three steam generators to the turbine high pressure section. The steam exhausted from the high pressure turbine is directed to the two turbine low pressure sections via moisture separators and single-stage reheaters. Steam from low pressure sections is exhausted to a condenser. Condensate from the condenser is manifolded and pumped by three 33% capacity condensate pumps to a series of heat exchangers. The condensate is first directed to two 100% capacity (one on standby) steam jet air ejector (SJAE) condensers, steam packing exhauster (SPE) condensers and blowdown coolers. Then, the condensate flows through two 50% capacity low pressure feedwater heater trains consisting of four heaters per train. Finally, the condensate is discharged to a deaerator from which feedwater is pumped by three 33% capacity feedwater booster pumps in series with three 33% capacity feedwater pumps. After passing through a single high pressure feedwater heater, the feedwater is discharged to the three steam generator drums. Feedwater from each steam generator drum is recirculated by a 100% capacity pump through the associated steam generator. Steam from the drums is manifolded together and is used to supply the turbine. Blowdown from the steam generator drums is directed to the blowdown coolers, via a flash tank, before it is sent for cleanup.

Liquid sodium is used to transport the heat generated in the reactor core to the steam generator where it is used to produce steam. Figure 10.1-2 shows a simplified flow diagram of the sodium systems for a reactor module. There are two major sodium systems: the primary system and the secondary system called the intermediate heat transport system (IHTS). In the primary system four 25% capacity pumps recirculate primary sodium between the reactor core and the two 50% capacity intermediate heat exchangers. In the IHTS a 100% capacity pump recirculates secondary sodium between the steam generator and the intermediate heat exchangers.

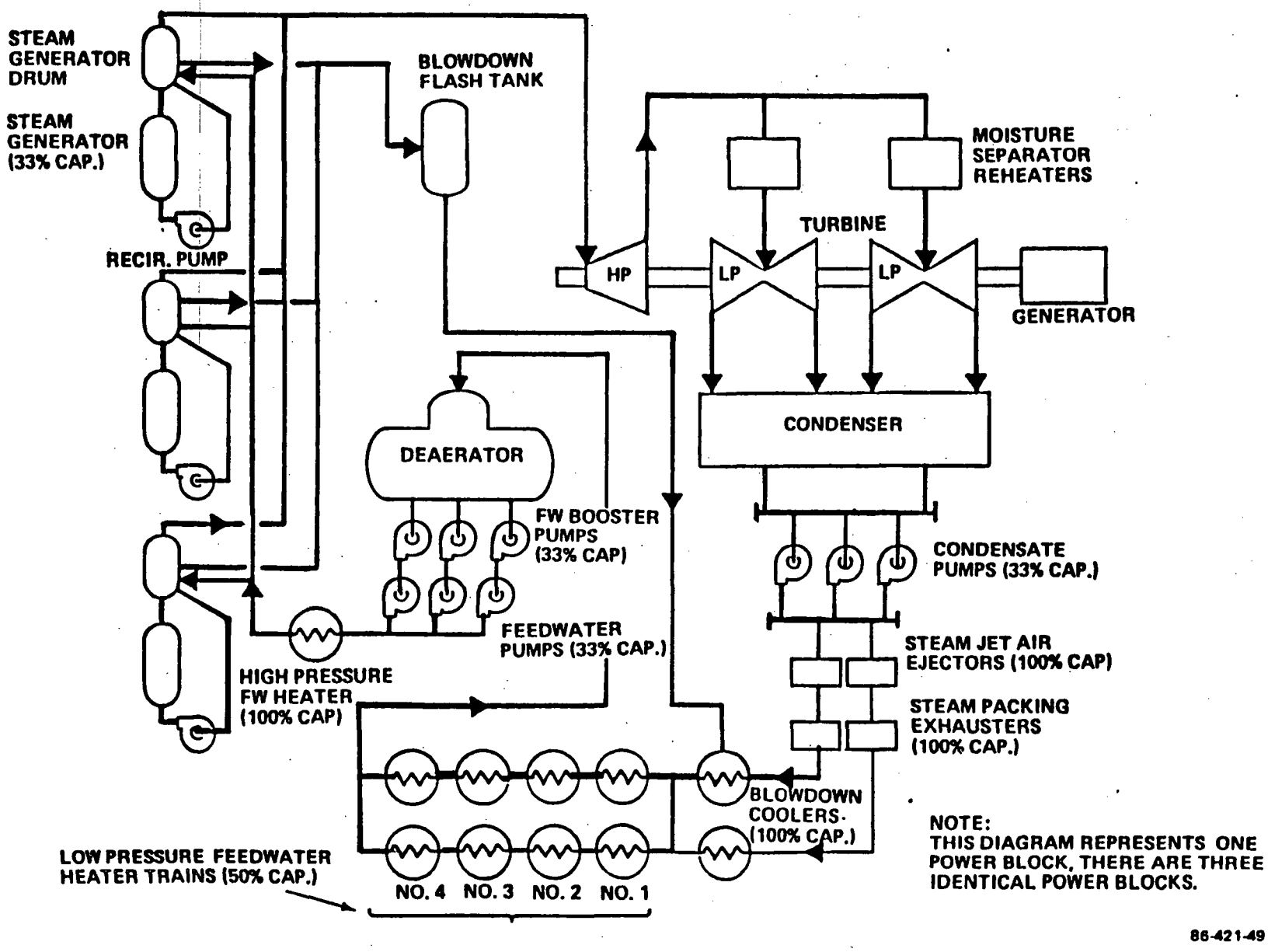

Figure 10.1–1 TURBINE HEAT CYCLE FLOW DIAGRAM

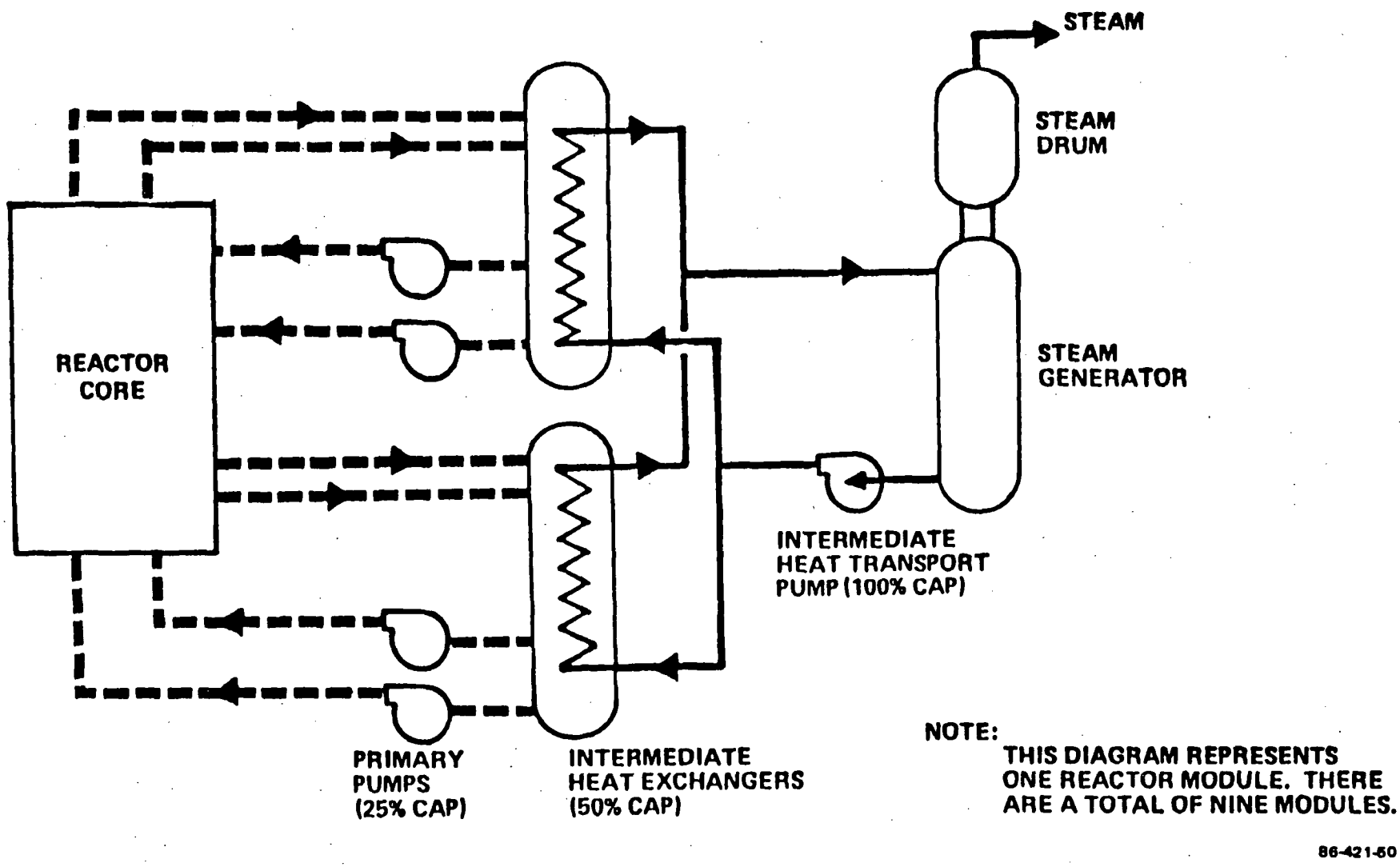

Figure 10.1–2 PRIMARY AND SECONDARY SODIUM SYSTEMS

10.2

10.2 Turbine-Generators

10.2.1 Design Bases

The functions of the turbine-generator are to convert thermal energy from steam produced by the steam generators into electrical energy and to provide extraction steam for the deaeration and regenerative heating of the feedwater and condensate.

There will be one turbine-generator for each power block containing three nuclear steam supply systems; the turbine-generator will have a nominal rating of 454 MWe (gross), based on a condenser vacuum of 2.5 in. of mercury absolute. The steam entering the turbines will have a throttle pressure of 956 psia and throttle temperature of 540 degrees F.

The turbine casing, as an integral part of rotating machinery, is excluded from the ASME Boiler and Pressure Vessel Code, and will be designed and built to the manufacturer's standards.

The turbine-generators shall be located such that missiles from postulated turbine failures do not impair safety-related systems.

The turbine-generator shall have the following load demand change capability:

1. Frequency Governing Capabilities During Normal Operation:
   a. Respond to +1.3%, -0.7% of unit nameplate megawatt rating in 2 seconds.
   b. Maximum deadband of 0.06% frequency.

2. Normal Daily Load Following:
   a. 100% to 50% of nameplate MW rating up to 2%/min. over a 2-hour period (0.417%/min. average).

b. 50% to 100% in 2 hours at rates up to 2%/minute

3. Weekly Load Reduction:
   a. 100% to 25% of nameplate MW rating at rates up to 2%/min. over a 1.25 hour period (1%/min. average).

4. Tie Line Backup:
   a. 10% of rated power change for each power block (within power range of 25-100% power) at 10%/min. followed by an additional 15% (within power range of 25-100% power) at 5%/min.

5. "Step" Response (due to isolated grid recovery or other causes):
   a. 10% of rated power change for each power block (within power range of 25-100%) at 60%/min.

6. Total Load Rejections:
   a. After prompt resynchronizing, reload to 100% power in 20 minutes

10.2.2 Description

The PRISM turbine plant has three turbine-generator sets, one for each power block, located in separate buildings. Each main turbine is a 1800 rpm, tandem compound, four flow (TC4F), reheat machine with 38 inch last stage blades. The turbine consists of one single flow high pressure (HP) cylinder and two double flow low pressure (LP) cylinder casings, with a conventional steam sealing system.

Steam at 965 psia and 0.41% moisture by weight is supplied from three steam generators to the turbine high pressure section. The steam exhausted from the high pressure turbines is directed to the two turbine low pressure sections via moisture separation and single stage reheaters. The moisture

separator reheater has an 85% efficiency and a 25 degree F terminal temperature difference. Steam from the low pressure sections is exhausted to a condenser.

The HP turbine has a single extraction nozzle to provide steam for the HP feedwater heater; there are four extraction nozzles from the LP turbines for feedwater heating.

A single generator is on a common shaft with the turbine rotors. The generator is rated at 528 MVA at 45 psig hydrogen pressure and a 0.90 power factor. The generator has a liquid cooled stator and a hydrogen cooled rotor.

The turbine-generator produces 454 MWe (gross) of electricity exhausting at 2.5 in. of mercury absolute pressure.

The turbine-generator unit is supplied with all auxiliaries, such as instrumentation, piping, and required valving, and the following systems:

1. Hydrogen seal oil system
2. Gland seal steam system
3. Electrohydraulic control system
4. Lube oil system
5. Generator gas system
6. Turning gear
7. All supervisory instrumentation

10.3

10.3 Main and Auxiliary Steam System

The main and auxiliary steam system consists of the following systems:

1. Three Main Steam Systems, one per power block
2. Three Main Dump Systems, one per power block
3. Three Extraction Steam Systems, one per power block
4. One Auxiliary Steam System, common for the plant

The mMain steam system takes steam from the steam generator system (SGS) and transports it to the high-pressure (HP) cylinder inlet of the steam turbine. This system also transports steam from the turbine HP cylinder exhaust to the moisture separator/reheaters (MSR) and from there to the turbine low-pressure (LP) inlet cylinders.

The main steam dump system includes provisions for steam to be bypassed to the condenser following a turbine-generator load rejection or turbine trip in order to prevent a reactor trip. The steam dump also provides a main steam flow path to the condenser during plant startup.

The extraction steam system conducts steam from extraction points on the HP and LP turbines to the feedwater heaters. The system includes the required valves and controls to protect the turbine from water induction damage and to provide overspeed protection in accordance with ASME recommended practices.

The auxiliary steam system provides steam for various process uses and heating throughout the plant during plant startup, normal plant operation, and plant shutdown. Auxiliary steam is supplied by the auxiliary boilers.

10.3.1 Design Bases

10.3.1.1 Functions

The functions of the main steam system are:

1. Provides steam from the steam generators to the main turbine inlet (stop valve)
2. Conducts steam from the HP turbine exhaust to the MSRs
3. Transports steam from the MSRs to the LP turbines
4. Provides heating steam for the MSRs
5. Provides steam to the steam jet air ejectors (SJAE)
6. Provides steam for turbine shaft sealing

The functions of the main steam dump system are:

1. Provides a means of controlled heat release from reactors through the steam generators during startup, hot shutdown, cooldown, and reactor physics testing
2. Provides a means of preventing reactor trips during rapid load reductions or load rejections by dumping main steam to the condenser
3. Provides the capability for testing the turbine cycle

The functions of each extraction steam system are to:

1. Conduct steam from extraction points on the HP and LP turbines to the feedwater heaters
2. Provide the capability to isolate the steam side of any feedwater heater except those in the condenser neck
3. Prevent the turbine rotor from reaching speeds which would cause damage to the turbine-generator
4. Detect and warn, by alarm, of impending water induction to the turbine
5. Provide drainage of the turbine during startup, normal operation, and shutdown in conjunction with the turbine drain system
6. Provide a path for moisture in extracted steam to drain through feedwater heaters

The auxiliary steam system is a common plant-wide system that supplies steam to the following equipment and systems:

1. The turbine gland seal system for sealing the turbine shafts during power block startup
2. Hot water heating heat exchangers and HVAC heating coils for air heating of buildings
3. Condensate storage tank heaters
4. Demineralized water storage tank heater
5. Potable water storage tank heaters
6. Steam generators for preheating metal components, cleaning, and flushing prior to plant startup

10.3.1.2 Process Criteria

Each main steam system shall be designed to:

1. Transport saturated steam from the steam generator system to the turbine-generator over the load following range of 25 to 100 percent of design power
2. Deliver a steam flow of approximately 5.2×10^6 lb/hr to the HP turbine stop valves, for each of three steam turbines, under turbine valves wide open (VWO) conditions (105% of guaranteed conditions) at 965 psia, 540°F
3. Deliver a steam flow of approximately 4.9×10^6 lb/hr to the LP turbine intercept valves, under VWO conditions at about 175 psia, 514°F
4. Steam purity shall be at the lowest practical level of contaminants, as per steam purity requirements, not to exceed:
   a. 3.0 ppb Na and cation conductivity of 0.2 micromho/cm during normal operation
   b. 6.0 ppb Na and cation conductivity of 0.5 micromho/cm during abnormal operation (100 hours per incident; 500 hours accumulative in 12-month operation period)
   c. 10.0 ppb Na and cation conductivity of 1.0 micromho/cm (for periods of 24 hours or less; accumulative not to exceed 100 hours in 12-month operating period) during upset operating conditions

d. Steam generator manufacturers' limits on such compounds as silica, copper, iron, lead and oxygen

Each main steam dump system shall be designed to:

1. Provide the means (steam bypass to condenser) for a controlled heat release from the reactor during startup, hot shutdown, cooldown, and reactor physics testing
2. Provide a main steam turbine bypass to the condenser of 60 percent of VWO flow (approximately 3.1 x 10^6 lb/hr) to prevent reactor trips as a results of rapid load reductions and rejections

Each extraction steam system shall be designed to:

1. Conduct steam from turbine extraction points to LP and HP feedwater heaters, and other miscellaneous process demands
2. Provide feedwater heater isolation capability
3. Provide turbine overspeed and water induction protection
4. Provide turbine drain paths during startup, normal operation and shutdown

The auxiliary steam system shall be designed to:

1. Provide a steam flow of 100,000 lb/hr to the 250 psig header for various process uses and heating throughout the plant during startup, normal operation, and shutdown

2. Provide auxiliary steam for the following systems and components:
   a. Turbine gland seals
   b. Building steam to hot water heat exchangers
   c. HVAC heating coils
   d. Condensate storage tank heaters
   e. Demineralized water storage tank heaters
   f. Potable water storage tank heater
   g. Steam generator warm-up

10.3.1.3 Structural Criteria

The structural criteria used for the main and auxiliary steam system are provided in the following items:

1. The main and auxiliary steam system piping, equipment, and components shall be non-nuclear safety related.

2. The main and auxiliary steam system piping shall be designed, fabricated, and inspected, and erected in accordance with ANSI Standard B31.1. Valves shall be in accordance with the applicable ANSI Standard B16.5a pressure and temperature ratings.

3. The structural design of the main and auxiliary steam system shall permit operation at a power block thermal power of 1,275 MWt.

4. The main and auxiliary steam system piping shall be constructed of carbon steel per ASTM material specifications A53 Grade B. Valves and fittings for the systems shall be carbon steel and shall comply with the respective ASTM materials specifications.

5. The system shall be supported such that it will withstand the dynamic forces encountered during a turbine trip.

6. Steam piping shall have adequate flexibility to limit forces and moments at anchor points, and upon plant components, to acceptable levels and to ensure code acceptable stress levels within the piping itself.

10.3.1.4 System Configuration and Essential Features

The system configuration requirements and the essential features of the main and auxiliary steam systems are provided in the following items:

1. The steam dump control valves shall be able to open in 3 (three) seconds maximum. The steam dump valves shall be selected so that noise levels during the dump operation are minimized. All valves shall be designed for full vacuum service and limited air in-leakage.

2. Redundant interlocks shall be provided to prevent dump operation in the event that the condenser is unable to accept the steam flow (e.g., condenser above atmospheric pressure).

3. Test connections shall be provided to allow performance testing of the steam turbine in accordance with ASME Power Test Code, PTC-6.

4. Steam sampling connections shall be provided in the main and auxiliary steam system for chemical sampling.

5. One stage of reheat shall be provided between the HP turbine and LP turbines.

6. Relief valves that discharge to the atmosphere shall be provided on the shell side of the MSRs for protection of the HP turbine.

7. Each extraction steam line, except those connected to the LP feedwater heaters in the condenser neck, shall be provided with a drain line to the condenser.

8. The extraction steam system shall be designed in conjunction with the heater drain system, and the feedwater and condensate system so that no individual failure will allow water induction into the turbine.

9. The main and auxiliary steam system shall be designed for a plant life of 60 years.

10. Thermal insulation shall be provided on all main and auxiliary steam system piping to minimize heat loss and to provide personnel protection.

11. Auxiliary steam shall be provided for cleaning, flushing, and heating prior to start up.

10.3.1.5 Surveillance Testing and In-service Inspection

The following surveillance testing and in-service inspection requirements shall apply to the main and auxiliary steam system.

1. All portions of the main and auxiliary steam system shall be accessible for visual inspection and testing.

2. The system design shall allow for periodic exercising of the turbine stop and control valves, and the intercept valves.

3. The system design shall provide for periodic testing of the main turbine trip system during turbine operation without affecting normal turbine operation.

4. The main and auxiliary steam system shall be designed for monitoring and/or recording system operating parameters such as pressure, temperature, pressure differential, and flow.

10.3.1.6 Instrumentation and Control Criteria

The main and auxiliary steam system instrumentation and controls shall be comprised of the following:

1. Main steam monitoring instrumentation
2. MSR isolation controls
3. Deaerator steam supply controls
4. Steam dump system controls
5. Extraction steam isolation valve controls

6. Extraction steam bleeder trip valve controls
7. MSR steam flow valve and bypass valve controls
8. Auxiliary boiler controls
9. Auxiliary steam system monitoring
10. Annunciators
11. Local instrumentation

10.3.2 Description

10.3.2.1 Summary Description

Each main steam system transports steam from the steam generators to the main turbine stop valves. This system also transports steam from the high pressure (HP) turbine exhaust to the moisture seperator/reheaters (MSR) for reheating and from the MSRs to the low pressure (LP) turbines' intercept valves.

Each main steam dump system provides a main steam flow path to the condenser during startup and a steam bypass capability to prevent a reactor trip following a turbine trip or generator load rejection.

Each extraction steam system conducts steam from extraction points on the HP and LP turbines to the feedwater heaters.

The auxiliary steam system provides steam for heating purposes and various process uses throughout the plant.

10.3.2.2 Detailed System Description

10.3.2.2.1 Main Steam System

A simplified flow diagram of the main steam system for one power block is presented in 10.3-1. The steam line from the three steam generators is manifolded into a single main steam header providing steam to the steam turbine. Each line is equipped with a stop check valve to prevent backflow to the steam generator or for isolation of steam generators. Safety and

atmospheric relief valves are included as part of the steam generator system. At the turbine-generator, steam is distributed to four HP turbine admission stop and control valves. The stop valves are used to isolate the turbine-generator from the main steam header. The control valves control the main steam flow to the turbine-generator. Four cold reheat steam lines direct the HP turbine exhaust steam to two MSRs where moisture is removed and the steam is reheated. As a source of heat, main steam is supplied to the two MSRs; the flow is controlled by control valves. Two hot reheat lines on each MSR direct steam to the stop/intercept valves at the LP turbines inlets. The stop/intercept valves are combination stop and control valves that either isolate or control steam flow to the LP turbine cylinders. The main steam system also provides motive steam used in the SJAEs to remove noncondensible gases from the main condenser, and steam to the turbine gland system for sealing of the turbine shaft.

10.3.2.2.2 Main Steam Dump System

This system provides a main steam turbine bypass to the condenser, also shown in Figure 10.3-1. The main steam dump system takes steam from the main steam lead to the turbine upstream of the turbine stop valves, bypasses the turbine, and dumps the steam into the condenser. The bypass valves can be modulated from the control room. The bypass valve system consists of a series of eight valves mounted on a manifold and operating in parallel. To provide for a uniform flow distribution, steam is supplied to both ends of the valve manifold. Each of the bypass valves directs the steam to the condenser shell through a pressure breakdown assembly to reduce the discharge pressure into the condenser to acceptable values. In addition, the bypass valve discharges are distributed inside the condenser to assure that the condenser heat loads and turbine back pressure change uniformly. Each bypass control valve passes 12.5 percent of the bypassed steam, assuring that the steam dump provides smooth and stable dissipation of the steam load.

10.3.2.2.3 Extraction Steam System

A simplified flow diagram of the extraction steam system for one power block is presented in Figure 10.3-2. HP turbine extraction provides heating steam to the HP feedwater heater HTR 5. In addition, as can be seen in the drawing, two phase flows (vapor and liquid) from the reheater section of the MSRs are routed to the HP feedwater heater for heating; flows from the moisture separator section of the MSRs are routed to the main deaerator for deaerating. The LP turbines provide extraction steam to the two trains of LP regenerative feedwater heaters (HTR 1 through HTR 4). The HP turbine shaft seal leakoff is directed to heaters HTR 4.

Each extraction steam system, in conjunction with the HP and LP heater drain system, the feedwater system, and the condensate system, is designed so that no individual equipment failure in these systems will result in water entering the turbine from the feedwater heaters. The extraction lines to feedwater heaters HTR 3 through HTR 5 have motor-operated valves for automatic shutoff on extreme high level in the feedwater heater to prevent backflow to the turbine. Immediately downstream of each motor-operated valve, a fast closing bleeder trip valve (non-return valve) is used to limit turbine overspeed due to entrained energy in the extraction system. This valve affords protection from a water induction standpoint. The bleeder trip valves are normally closed by heater high water level or turbine trip signals.

HTR 1 and HTR 2 heaters are located in the low steam flow spaces of the condenser neck. Since they are the lowest pressure heating stages, the chance of water induction into the turbine from these heaters is slight. Consequently, bleeder trip valves on extraction lines to these heaters are not used. This allows placement of these heaters in the condenser neck (no valve maintenance possible) resulting in an efficient utilization of building space.

10.3.2.2.4 Auxiliary Steam System

The auxiliary steam system is common to the entire power plant. Each of the three auxiliary boilers can supply 50 percent of the total maximum plant auxiliary steam demand. A simplified flow diagram of this system including the auxiliary boiler, which is a major part of this system, is shown in Figure 10.3-3.

The auxiliary steam system consists of three auxiliary steam boilers, an auxiliary steam header, piping and associated valving and instrumentation. Lines from the auxiliary steam header conduct the steam to the process and heating equipment where the steam pressure, when required, is further reduced prior to entering the equipment.

10.3.2.3 Instrumentation and Controls

A description of the instrumentation and control functions follows:

1. Main steam monitoring instrumentation provides:
   a. Control room valve position indications
   b. Control room indication of system pressures, temperatures, and flows
   c. Data for recording steam pressures, temperatures, and flows

2. MSR isolation controls permit automatic isolation of the MSRs on turbine trip signals and manual operation of the reheater steam isolation valves from the control center.

3. Deaerator steam supply controls activate on turbine trip signal or on a signal from the turbine load control system to prevent feedwater pump cavitation on rapid load reductions or turbine trip.

4. Steam dump system is controlled by the turbine bypass system controls to permit steam dump to the condenser when the condenser is available.

5. Extraction steam isolation valve controls permit manual operation of each extraction steam isolation valve from the main control room and provide automatic valve closing in the event of extreme high water level in the feedwater heater.

6. Extraction steam bleeder trip valve controls permit local testing of each extraction line bleeder trip valve and provide power assist closing in the event of a turbine trip or extreme high water level in an associated heater.

7. MSR steam flow valve controls modulate steam flow to each reheater for gradual heatup to protect the reheater and LP turbines from rapid temperature transients. It also permits manual operation of the steam flow valve from the control center.

8. Auxiliary boiler controls provide:

   a. Local open-closed operation of motor operated valves

   b. Constant pressure steam in the auxiliary steam header during auxiliary boiler operation

   c. Constant pressure in the auxiliary steam deaerator by modulating the valve on the deaerator steam supply

9. Auxiliary steam system monitoring provides for control center displays and data recording to allow operator evaluation of auxiliary steam system performance.

10. Annunciators alert the control center operator that corrective action is required to restore normal system operation.

11. Local instrumentation provides information on parameters, such as pressures, temperatures and flow rates, to evaluate system operation for any annunciated malfunction and monitor equipment performance to detect deterioration of performance.

10.3.3 Water Chemistry

Control of water chemistry is required to minimize corrosion of the steam generator system, particularly the steam generator, and to minimize fouling of the steam generator heat transfer surfaces. The proper water chemistry conditions will be maintained by deaeration of the feedwater, use of a zero solids, all-volatile chemical treatment, continuous blowdown of the steam drum, and demineralization of blowdown drains which recycle to the condenser for return to the feedwater system. Introduction of corrosion product impurities into the steam generator system is minimized by use of stainless steel feedwater heaters.

The recirculation water will be maintained at a pH between 8.7 and 9.1 by addition of a volatile chemical, ammonium hydroxide, to the feedwater. (Because of its volatility, the ammonium hydroxide also provides corrosion protection to the steam and condensate systems.) Another volatile chemical, hydrazine, will be added to the feedwater to remove any dissolved oxygen not removed by the upstream deaerator. A small excess hydrazine will be maintained in the recirculation water for maximum corrosion protection. Neither ammonium hydroxide or hydrazine form solid reaction products under conditions existing in the steam generator.

Water purity, in terms of low dissolved and suspended solids, will be maintained by the combination of 2% blowdown and the bypass demineralizer located in the feedwater drain line.

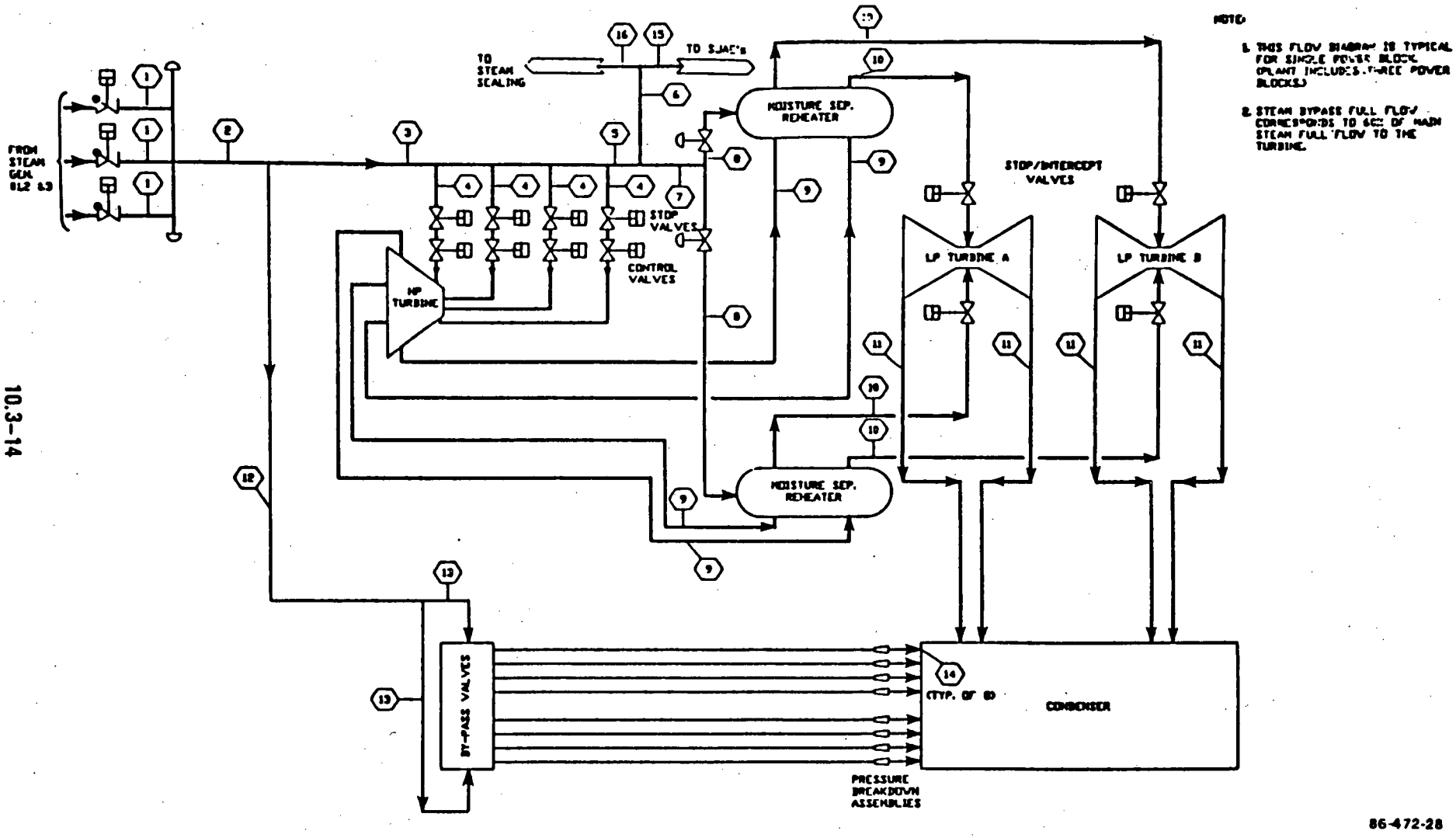

Figure 10.3–1 MAIN STEAM AND DUMP SYSTEM FLOW DIAGRAM

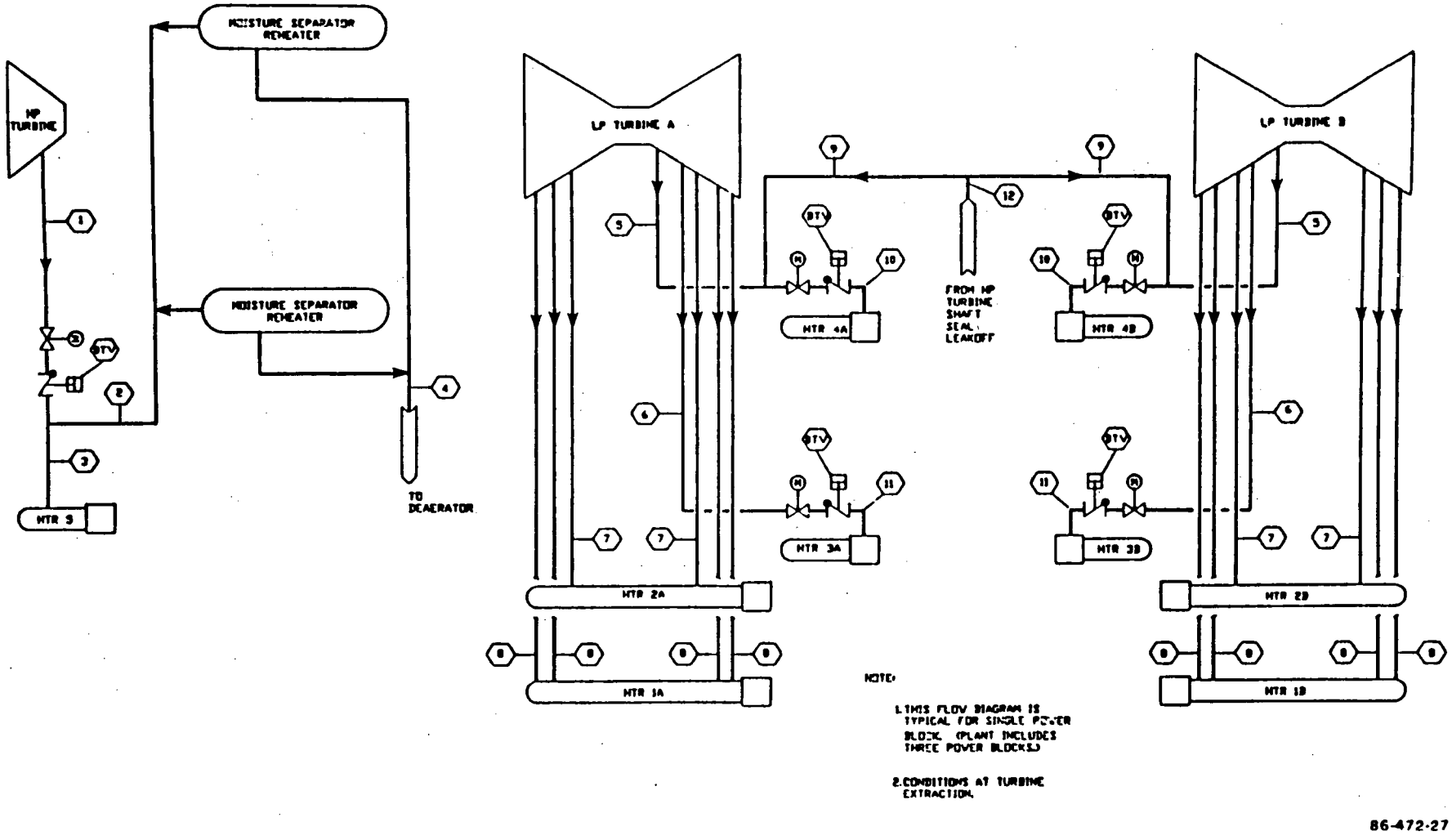

Figure 10.3–2 EXTRACTION STEAM SYSTEM FLOW DIAGRAM

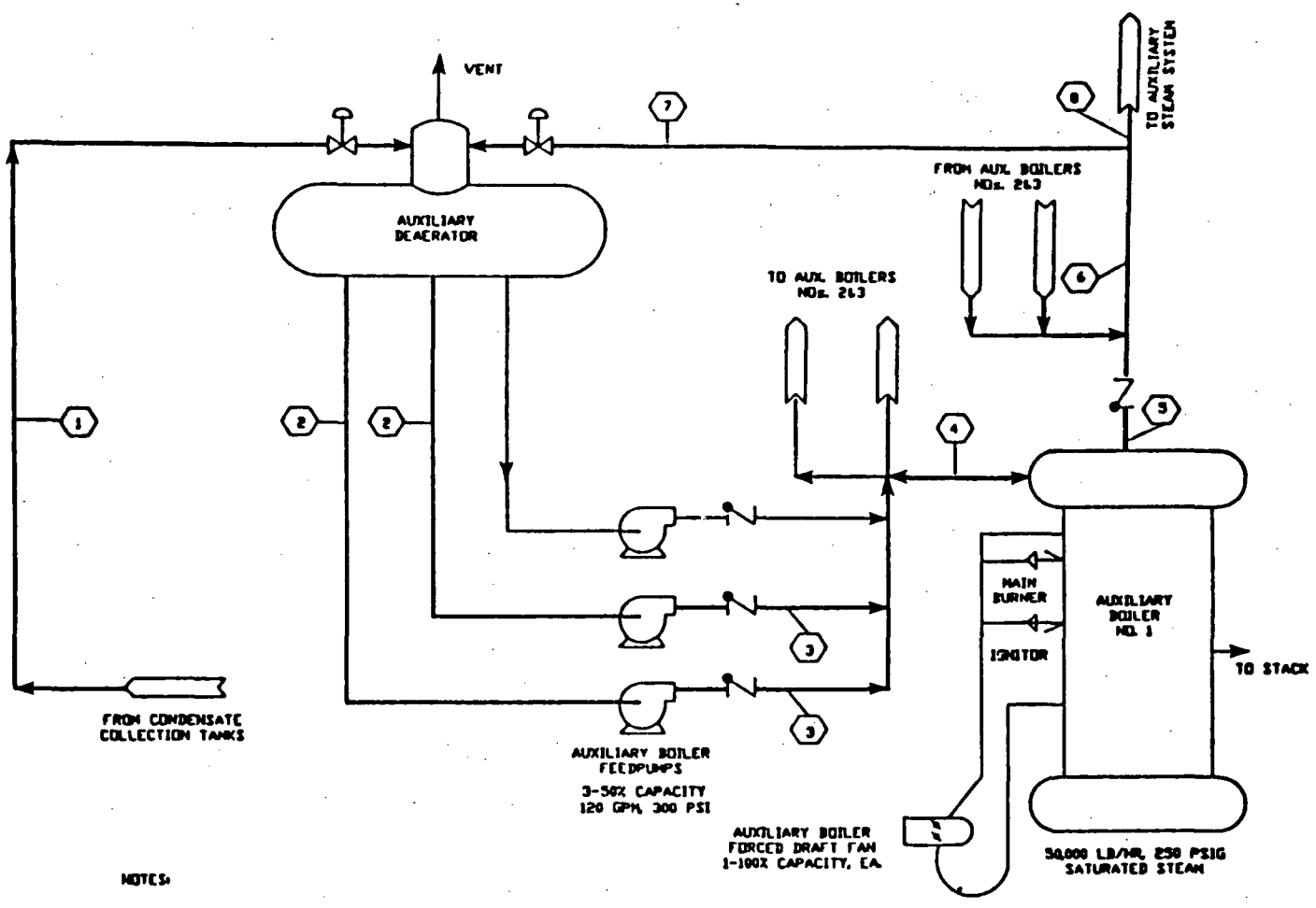

NOTES:

1. FLOWS SHOWN INCLUDE WINTER HEATING QUANTITIES.

2. AUXILIARY BOILERS ARE COMMON FOR THE THREE POWER BLOCKS WHICH COMPRISE THE POWER PLANT.

86-472-29

Figure 10.3–3 AUXILIARY STEAM SYSTEM FLOW DIAGRAM

10.4

10.4 Other Features of Steam and Power Conversion System

10.4.1 Heat Rejection System

The heat rejection system consists of the following subsystems:

1. Main condenser
2. Condenser air extraction
3. Circulating water (including plant service water loop and cooling towers)

10.4.1.1 Design Bases

10.4.1.1.1 Functions

The function of the heat rejection system is to transfer the heat load rejected through the main condenser and other auxiliary water cooled heat exchangers to the atmosphere utilizing mechanical draft cooling towers.

10.4.1.1.1.1 Main Condenser Subsystem

The heat load to be rejected includes the duty imposed on the condenser by condensing main turbine exhaust steam and the collection of miscellaneous equipment vent and drain flows.

10.4.1.1.1.2 Condenser Air Extraction Subsystem

The functions of this subsystem are to remove air and noncondensable gases from the condenser to reduce the condenser pressure at plant startup to operating vacuum levels and maintain the appropriate condenser vacuum during plant operation.

10.4.1.1.1.3 Circulating Water Subsystem

The functions of the circulating water subsystem are:

1. Remove the heat load rejected through the main condenser utilizing mechanical draft cooling towers

2. Remove the heat load rejected through the Plant Service Water System utilizing the same mechanical draft cooling towers

10.4.1.1.2 Design Requirements

The heat rejection system shall be designed in accordance with the following requirements:

1. Remove air and non-condensable gases from the condenser to achieve and maintain a turbine backpressure of 2.5 in. HgA at rated conditions

2. Provide condenser capability for a heat rejection rate of approximately 3×10^9 Btu/hr for each of three nuclear steam supply systems

3. Transfer approximately 3.1×10^9 Btu/hr from the main condenser and the Plant Service Water System, for each of three nuclear steam supply systems, and reject it to the atmosphere through the use of mechanical draft cooling towers

System design parameters for each of three nuclear steam supply systems shall be:

- Wet bulb temperature of 65°F
- Circulating water flow rate of 250,000 gpm
- Service water flow rate of 8,000 gpm
- Cooling tower basin water temperature of 90°F
- Blowdown flow rate of 700 gpm
- Makeup flow rate of 8,000 gpm

10.4.1.2 System Description

A simplified flow diagram of the Heat Rejection System is shown in Figure 10.4-1.

10.4.1.2.1 Main Condenser Subsystem

Each of the three steam turbines have bottom exhausts to a single-pressure longitudinal double pass condenser. Each condenser accommodates steam flows of approximately 3.1 x 10^6 lbs/hr and a heat load equal to 3.0 x 10^9 Btu/hr. Cooling water flow to each condenser is approximately 250,000 gpm. Condenser hotwells have storage capacity equal to about two minutes of condensate flow.

10.4.1.2.2 Condenser Air Extraction Subsystem

The condenser air extraction subsystem utilizes steam jet air ejectors (SJAE) connected to each condenser shell are used to remove the air and noncondensable gases and discharge them to atmosphere during normal plant operation. Mechanical vacuum pumps are used during startup for rapid drawdown.

The subsystem consists of two SJAE's and two motor driven vacuum pumps. The vacuum pump units are used at plant startup to reduce the condenser pressure from normal atmospheric to 5 in. HgA. Then the SJAE's are used to reduce the pressure from 5 in. HgA to its operating value and then maintain it.

10.4.1.2.3 Circulating Water Subsystem

The circulating water subsystem provides cooling water for the main condensers. Cold circulating water is supplied from the cooling tower basins to the condensers to condense the steam exhausted from the turbines. The hot circulating water is returned to the mechanical draft cooling

towers where heat is rejected to the atmosphere. Heat from the plant service water system is rejected to the atmosphere utilizing the same cooling towers.

The circulating water subsystem is comprised of vertical, wet pit type pumps, connecting piping, valves and fittings. The pumps, located in a structure at each of the three cooling tower basins, are sized to meet the requirements of the main condensers. Each pump is located in a separate bay sized in accordance with Hydraulic Institute Standards and manufacturer's recommendations. Each bay has slots for panel screens and stop logs. The circulating water is screened by the stationary panel screens.

The discharge of each pump has a motor-operated butterfly valve which is electrically interlocked with the pump for startup and shutdown. The circulating water pumps are controlled from the control center.

Each pump discharges into a 60 in. dia. steel pipeline which headers together underground into a single 84 in. dia. steel pipe. Each condenser has two separate flow paths of 50 percent capacity, each. Isolation butterfly valves are provided at the initial inlet and final outlet of each condenser flow path to allow isolation of one path for maintenance during operation, if required. Three round mechanical draft counterflow cooling towers are used. Each cooling tower has ten fans. Normally all fans are operated at full speed. However, depending on unit load and meteorological conditions, the fans may be individually operated at half speed or shutdown. Fan control is from the control center.

Makeup water from the plant raw water supply is supplied to the cooling tower basin to balance evaporative, drift, and blowdown losses in the cooling towers.

A cooling tower bypass line is provided to convey hot circulating water directly to the cooling tower basin. The bypass line is sized for one circulating water pump flow, and is provided for cold weather startup or low load operation during cold weather. Operation of the bypass valve is from the control center.

The circulating water is chlorinated intermittently by chlorine injection at the condenser inlet water boxes. The pH of the circulating water is controlled by chemical addition at the cooling tower basin.

10.4.2 Feedwater and Condensate System

The feedwater and condensate system supplies heated feedwater at the required purity, temperature, pressure and flow rate to each of the three Steam Generator Systems (SGS) in all modes of operation. The feedwater and condensate system consists of the following systems:

1. Three Condensate Systems, one for each power block
2. Three Feedwater Systems, one for each power block
3. Three Feedwater Heater Drain Systems, one for each power block
4. One Auxiliary Boiler Feedwater and Condensate System

10.4.2.1 Design Bases

10.4.2.1.1 Functions

Each Condensate System performs the following functions:

1. Transfers condensate from the condenser hotwell to the deaerator via LP feedwater heaters in which condensate is heated
2. Removes dissolved gases in the condenser hotwell and the deaerator as necessary to achieve the SGS feedwater purity requirements during normal operation and transient conditions
3. Provides water quality treatment of condensate by addition of buffering agents into the deaerator
4. Provides condensate storage in the condenser hotwell and the deaerator storage tank to smooth out flow variations during transient conditions
5. Provides a condensate level in the deaerator storage tank to give the required feedwater booster pump NPSH
6. Controls condenser hotwell level

7. Provides cooling water for:
   a. SJAE condensers
   b. SGS blowdown coolers
   c. SPE condensers
8. Provides seal water for the condensate and feedwater pumps
9. Provides spray water for the turbine exhaust hoods

Each feedwater system performs the following functions:

1. Transfers feedwater from the deaerator to the SGS at the required flow rate, pressure and temperature to meet all operating conditions
2. Heats feedwater in the HP feedwater heater in accordance with the heat cycle design criteria
3. Fills the SGS for plant startup

Each feedwater heater drain system performs the following functions:

1. Directs condensed turbine extraction steam used for regenerative feedwater heating to the condenser hotwell
2. Controls shell side water level in all feedwater heaters during normal operating and transient conditions

The plant auxiliary boiler feedwater and condensate system performs the following functions:

1. Supplies feedwater to the auxiliary boilers at the required rate, pressure, temperature, and purity to meet auxiliary steam system needs at all operating conditions, including plant shutdown, startup, and low-power operation
2. Returns condensed auxiliary steam used for plant heating and process drains from auxiliary condensate collection tanks to the auxiliary boilers via the auxiliary boiler deaerator
3. Provides initial fill and makeup water to the auxiliary boiler deaerator from the power block condensate storage tank

10.4.2.1.2 Process Criteria

Each condensate system shall be designed in accordance with the following criteria:

1. Deliver approximately 6 x 10^6 lb/hr of condensate to the main feedpump suction, (via a condensate deaerator) at approximately 260 psia and 365°F

2. Provide pumps with a 5 percent flow margin to accommodate surge and a 5 percent flow margin to compensate for wear

3. Provide a recirculation line sized to accommodate approximately 30 percent of design flow to prevent condensate pump damage at low-flow operating conditions

4. Provide a deaerator capable of maintaining the dissolved oxygen content in the condensate to less than 5 ppb

5. Provide a deaerator storage tank with a 3 minute storage capacity

6. Provide a 5°F terminal temperature difference and a 10°F approach temperature in LP feedwater heaters to achieve the required condensate heating

Each feedwater system shall be designed in accordance with the following criteria:

1. Provide high purity feedwater to the SGS in accordance with the SGS supplier requirements defined in Section 5.6.

2. Provide the feedwater pump system with runout capability such that a reactor trip will not be required in the event that one feedwater pump is tripped or fails at 100 percent power

3. Size feedwater pump discharge recirculation line for approximately 30 percent of design flow to prevent pump damage at low-flow operating conditions

4. Provide a 5°F terminal temperature difference and a 10°F approach temperature in HP feedwater heater to achieve heating levels of the feedwater at the inlet to the SGS of 420°F to prevent thermal shock.

5. Provide feedwater at the discharge of the feedwater pumps at a pressure of approximately 1100 psia.

6. Provide booster and feedpumps with a 5 percent flow margin for surge and an additional 5 percent flow margin for wear

Each feedwater heater drain system shall be designed in accordance with the following criteria:

1. Size the normal heater drain lines and blowdown lines for turbine-generator valves wide-open (VWO) operation

2. Size alternate drain lines to the condenser to allow each heater to drain to the condenser with the downstream heating stage out of service

3. Provide means to prevent water induction into the steam turbine on turbine trip or during transients

The auxiliary boiler feedwater and condensate system is is shared by all of the power blocks and shall be designed in accordance with the following criteria:

1. Deliver 100 gpm of feedwater to each of three auxiliary boilers at approximately 300 psig

2. Size each auxiliary boiler feed pump to satisfy the feedwater requirements of the auxiliary boiler, at rated conditions, with 5 percent flow margin added for surge and an added 5 percent flow margin for wear

3. Provide a continuous minimum flow recirculating line from each feed pump discharge to the auxiliary boiler deaerator to prevent pump damage under low load conditions

10.4.2.1.3 Structural Criteria

The following structural criteria shall be used for the feedwater and condensate system.

1. All piping, equipment, and components of the feedwater and condensate system shall be non safety-related.

2. Piping shall be designed, fabricated, inspected, and erected in accordance with ANSI Standard B31.1, "Power Piping". Valves shall be in accordance with the applicable ANSI B16.5a pressure and temperature ratings.

3. Piping shall be constructed of carbon steel per ASTM material specifications. Valves and fittings shall be carbon steel and shall comply with the respective ASTM material specifications.

4. Vibration and water hammer shall be considered in the design of piping for all operating modes.

5. Piping shall have adequate flexibility to:
   a. Limit forces and moments at anchor points, and upon plant components, to acceptable levels
   b. Ensure code acceptable stress levels in the piping.

6. The system shall be supported such that it will withstand the dynamic forces encountered during a turbine trip or pump seizure.

7. All valves directly connected to the condenser shall be designed for vacuum service.

8. The structural design of the Condensate, Feedwater, and Feedwater Heater Drain systems shall permit operation at a power block thermal power of 1,275 MWt.

10.4.2.1.4 System Configuration and Essential Features

The system configuration requirements and essential features of the Feedwater and Condensate System are provided in the following items.

1. The design and location of the deaerator storage tank shall ensure that feedwater booster pump NPSH is at least 1.25 times the NPSH required at runout flow.

2. Each feedwater heater shall be provided with alternate drain lines to the condenser with control valves for heater drain control.

3. Provisions shall be made to allow for flushing and cleaning of the feedwater and condensate system.

4. Pressure relief valves that discharge to a drain tank or to the condenser shall be provided to protect the shell side of the feedwater heaters and other heat exchangers.

5. The condensate and feedwater systems shall be designed for a plant life of 60 years.

6. Thermal insulation shall be provided on piping and equipment to minimize heat losses and to provide for personnel protection.

7. The auxiliary boiler condensate and feedwater system shall include auxiliary boiler condensate collection tanks, deaerator, auxiliary boiler feed pumps, and connecting piping and valves. Components of the system shall be located near the auxiliary boilers.

8. Auxiliary boiler feedwater chemistry control shall be maintained by a deaerator and makeup from the condensate storage tanks.

9. The elevation of the auxiliary boiler deaerator shall be sufficient to provide 1.25 times the required NPSH for the auxiliary boiler feed pumps at 100 percent auxiliary boiler feedwater flow.

10.4.2.1.5 Surveillance Testing and Inservice Inspection

The following surveillance testing and inservice inspection criteria shall be considered in the design of the condensate and feedwater system:

1. Allocate space for periodic inspection of pumps, tanks, heat exchangers, flow control valves, and monitoring instrumentation.

2. Provide for monitoring and/or recording of system operating parameters such as pressure, temperature, pressure differential, temperature differential, flow, and rotating equipment vibrations.

10.4.2.1.6 Instrumentation and Control Criteria

The instrumentation and controls for this system shall be based on the following general criteria:

1. Process variables, e.g., pressures, temperatures, flows, liquid levels, conductivity, pH, and vibrations, as required for monitoring of system and component operation, shall be measured.

2. Control components, e.g., valves, pumps, shall maintain process variables within operational and structural design limits over the full range of operating conditions.

3. Interface shall be provided with the plant control system and the data handling and transmission system.

4. Performance characteristics of pumps, feedwater heaters and other heat exchangers shall be monitored.

10.4.2.2 Description

10.4.2.2.1 Summary Description

The feedwater and condensate system provides feedwater to the steam generators and the auxiliary boilers. Feedwater quality is monitored and controlled so that feedwater into the SGS and the auxiliary boilers is in accordance with the steam generator and auxiliary boiler feedwater chemistry requirements.

Exhaust from the main turbine is condensed in the condenser and flows to the hotwell. From the hotwell, condensate is pumped through SJAE and SPE condensers, SGS blowdown coolers, and four stages of LP feedwater heaters to the deaerator. From the deaerator, the condensate flows by gravity to the deaerator storage tank, which provides the source of feedwater to the main feedwater pumps.

From the deaerator storage tank, feedwater is pumped through one stage of HP heating and is then directed to the steam generator drums. Booster pumps are provided at the feedwater pump suction to satisfy the NPSH requirements of the feedwater pumps without excessive deaerator elevation.

Fluid is returned to the feedwater and condensate systems through the feedwater heater drain system and/or the condenser hotwell. The HP heater drain is directed to the deaerator. The drains from the LP feedwater heaters are cascaded to the next lower pressure heater and, ultimately, to the condenser hotwell.

The auxiliary boiler feedwater and condensate system supplies feedwater to the auxiliary boilers. Auxiliary steam condensate is collected in local condensate collection tanks throughout the plant and returned to this system.

10.4.2.2.2 Detailed System Description

10.4.2.2.2.1 Condensate System

Each condensate system is comprised of the following main components:

1. Three parallel 33-1/3 percent capacity constant speed condensate pumps

2. Two parallel 100 percent capacity SJAE, SPE, SGS blowdown cooler trains

3. Two parallel trains of four 50 percent capacity low-pressure (LP) feedwater heaters

4. A deaerator with storage tank

5. Connecting piping from the condenser hotwell to the deaerator

These components are located in the associated power block turbine generator building.

A simplified flow diagram of the condensate system for one power block is shown on Figure 10.4-2. The condensate pumps deliver condensate from the condenser hotwell to a common header.

Normal condensate flow from the condensate pump discharge header passes through the SJAE condensers, the SPE condensers, the SGS blowdown coolers, and four stages of LP condensate heating.

From the LP condensate heating stages, the condensate is directed to the deaerator. Noncondensibles are separated from condensate in the deaerator and vented to atmosphere.

A control valve station in the condensate header upstream of the LP feedwater heater controls condensate flow based on the level in the deaerator storage tank.

Condensate is stored in the deaerator storage tank. A three minute storage capacity (at full power) is provided to smooth out condensate flow transients. The deaerator storage tank is elevated to provide the NPSH required by the feedwater booster pumps.

A reject line with a normally closed control valve is provided for dumping excess condensate to the condenser or the condensate storage tank in the event of a high level in the deaerator storage tank.

A make-up line supplies make-up water from the condensate storage tank to the system to compensate for losses from steam generator blowdown and from leakage. The make-up flow is controlled, utilizing a control valve in the make-up line, to maintain condensate level in the condenser hotwell.

A common minimum flow recirculation line with a control valve is provided to protect the constant speed pumps from overheating at low flow to the SGS.

Condensate from the condensate pump discharge header is also provided for the following services:

1. Condensate and feedwater pump seals
2. Exhaust hood spray water for the turbine generator unit
3. Heater drain seal loops

By definition, the condensate system ends at the outlet of the deaerator storage tank.

10.4.2.2.2.2 Feedwater System

The main components of the feedwater system are:

1. Three parallel 33-1/3 percent capacity constant speed feedwater booster pumps
2. Three parallel 33-1/3 percent capacity constant speed feedwater pumps
3. One high-pressure (HP) feedwater heater
4. Connecting piping from the deaerator storage tank to the SGS inlet

This equipment is located in the associated power block turbine generator building.

A simplified flow diagram of the feedwater system for one power block is presented in Figure 10.4-3. Feedwater is pumped from the deaerator storage tank and is discharged into a common header. Condensate from the deaerator storage tank to the feedwater pump suctions is supplied through booster pumps to satisfy the feedwater pump NPSH requirements.

The feedwater then passes through one stage of HP heating where it is heated to 420°F. From the HP heater, feedwater is distributed to the steam generators.

At low SGS flow conditions, feedwater is recirculated to the deaerator through a control valve. A minimum flow through the pumps is maintained to protect the pumps from overheating and from hydraulic instability at low flow.

The pH and the amount of dissolved oxygen are monitored by continuous sampling of the feedwater leaving the HP heater outlet.

10.4.2.2.2.3 Feedwater Heater Drain System

The main components of the Feedwater Heater Drain System are the drain pipes connecting the various heaters and control valves. A simplified flow diagram for one power block is shown in Figure 10.4-4. The drain from the HP heater is directed to the deaerator. The drains from the LP heaters are cascaded to the next lower heater and, ultimately, to the main condenser hotwell through a seal loop. Drains from the SJAE and SPE condensers and blowdown coolers drain directly to the main condenser hotwell.

Each feedwater heater is provided with an alternate drain line which allows draining of the heater to the main condenser when a downstream heater is out of service.

10.4.2.2.2.4 Auxiliary Boiler Feedwater and Condensate System

The auxiliary boiler feedwater system is located in the auxiliary boiler building and includes the following main components:

1. A deaerator
2. Three parallel 50 percent capacity constant speed feedwater pumps
3. Condensate collection tanks
4. Condensate return pumps
5. Connecting piping

The auxiliary boiler feedwater system is shown in Figure 10.4-5. The condensate drains from all users of auxiliary boiler steam are routed via self-venting drain lines to local collection tanks. The drain from the collection tanks is then pumped to the auxiliary boiler deaerator.

Three auxiliary boiler feed pumps take suction from the auxiliary boiler deaerator storage tank, discharge into a common header and deliver feedwater to the auxiliary boiler drums.

To compensate for losses, make-up water is provided from the main condensate storage tank to the auxiliary boiler deaerator which is level controlled by a control valve in the make-up water line.

10.4.2.2.3 Instrumentation and Controls

Instrumentation provides information in the main control room, such as pressures, temperature, flow rates, condensate and feedwater levels, and rotating machinery vibrations, to monitor system operation and equipment performance, and to determine the cause of any annunciated malfunction. A brief description of specific system controls is provided below.

10.4.2.2.3.1 Condensate System

1. The condensate pumps are normally started or stopped manually from the control center. Pump operation is interlocked with the pump suction and discharge valve positions and the condenser water level.

2. On flows below 30 percent of rating, the minimum recirculation valve opens and modulates to assure minimum allowable flow through the pumps.

3. The deaerator storage tank level is controlled by modulating the control valve in the condensate header upstream of the LP feedwater heater trains.

4. On high levels in the deaerator storage tank or condenser hotwell, condensate is discharged to the condensate storage tank by activating the reject control valve.

5. Make-up to the condenser is supplied from the condensate storage tank and controlled by the make-up control valve modulated on signals from the condenser hotwell level.

6. Placing a heat exchanger train into or out of service is achieved manually from the control center.

10.4.2.2.3.2 Feedwater System

1. The feedwater booster and the main feedwater pumps are operated simultaneously in sets. Each set of pumps is interlocked with the pump suction and discharge valve position, the pump suction pressure and the deaerator storage tank condensate level.

2. On flows below 30 percent of rating the minimum recirculation valve opens and modulates to ensure minimum allowable flow through the feedwater pumps.

10.4.2.2.3.3 Feedwater Heater Drains System

1. Modulating valves in the feedwater heater drain lines control the normal level in the associated heaters.

2. On high condensate level in the feedwater heaters, the modulating valves on the heater dump lines to the condenser are activated to provide an alternate drain.

10.4.2.2.3.4 Auxiliary Boiler Feedwater and Condensate System

1. Auxiliary feedwater pumps are started and stopped manually from the local auxiliary boiler control panel. The pump operation is interlocked with the auxiliary boiler deaerator condensate level.

2. Auxiliary condensate pumps are operated automatically on signals from the condensate collection tanks.

3. The auxiliary deaerator normal level is controlled by modulating the make-up control valve.

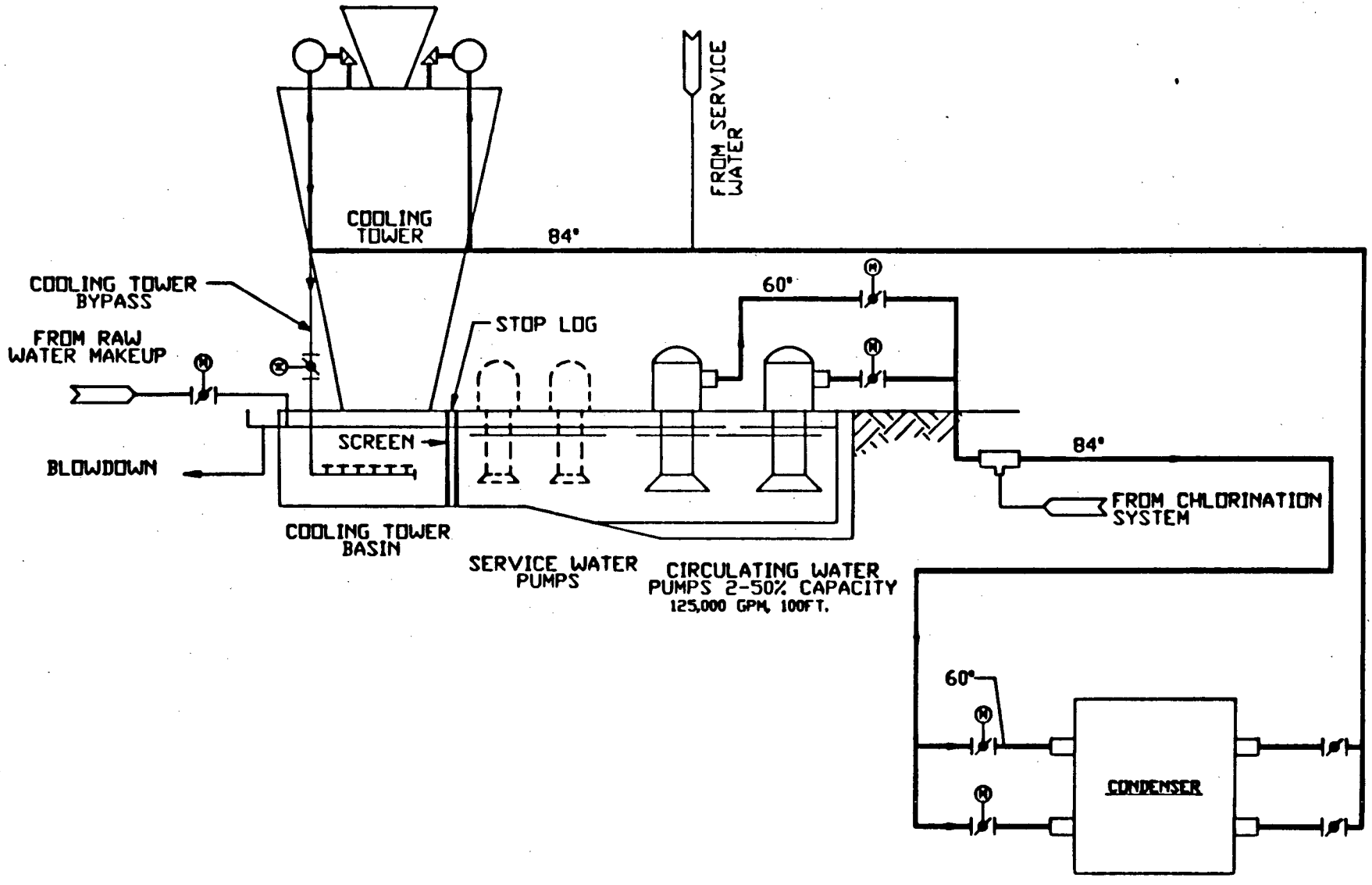

Figure 10.4–1 HEAT REJECTION SYSTEM FLOW DIAGRAM

85-515-90

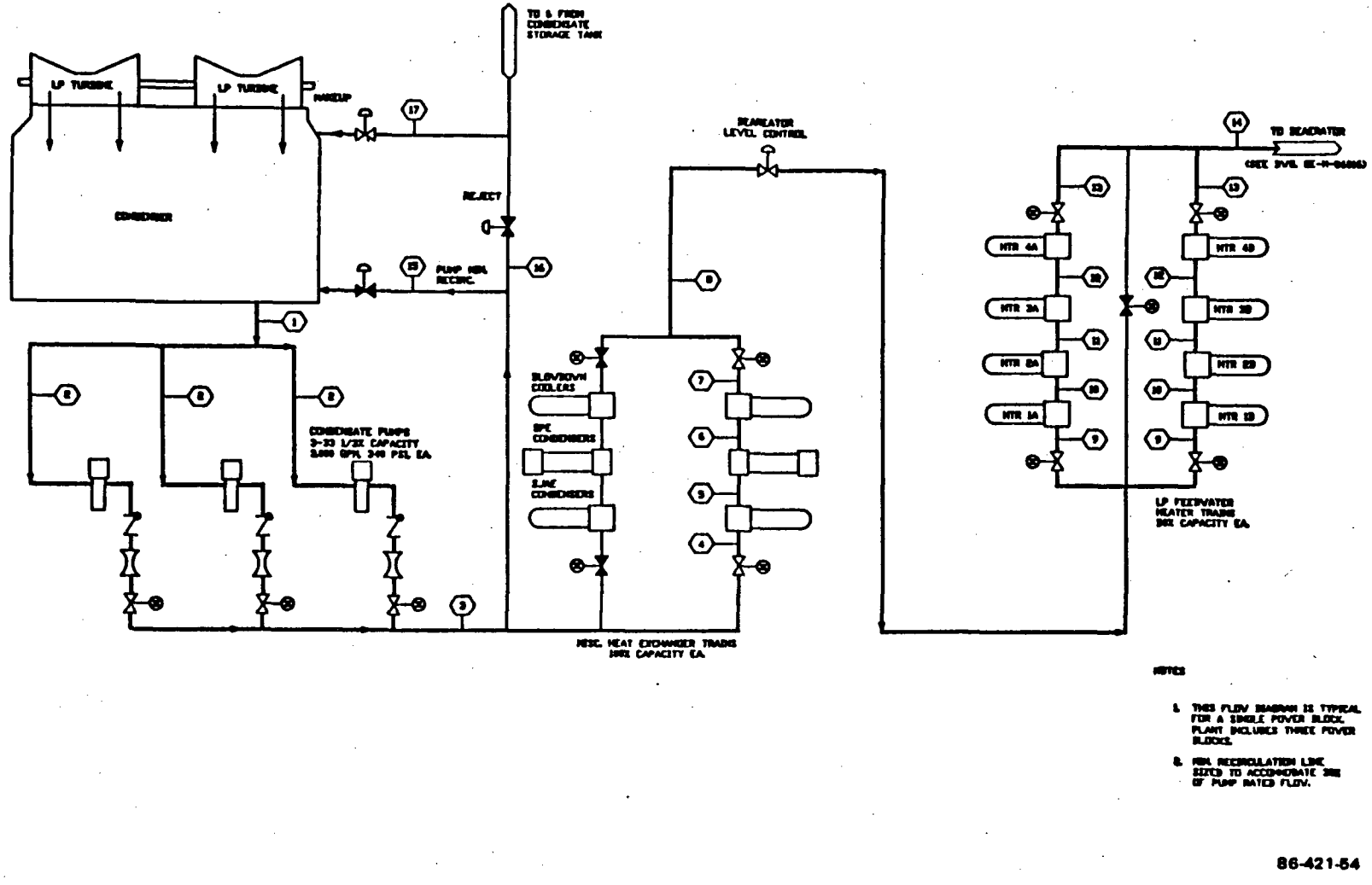

Figure 10.4–2 CONDENSATE SYSTEM FLOW DIAGRAM

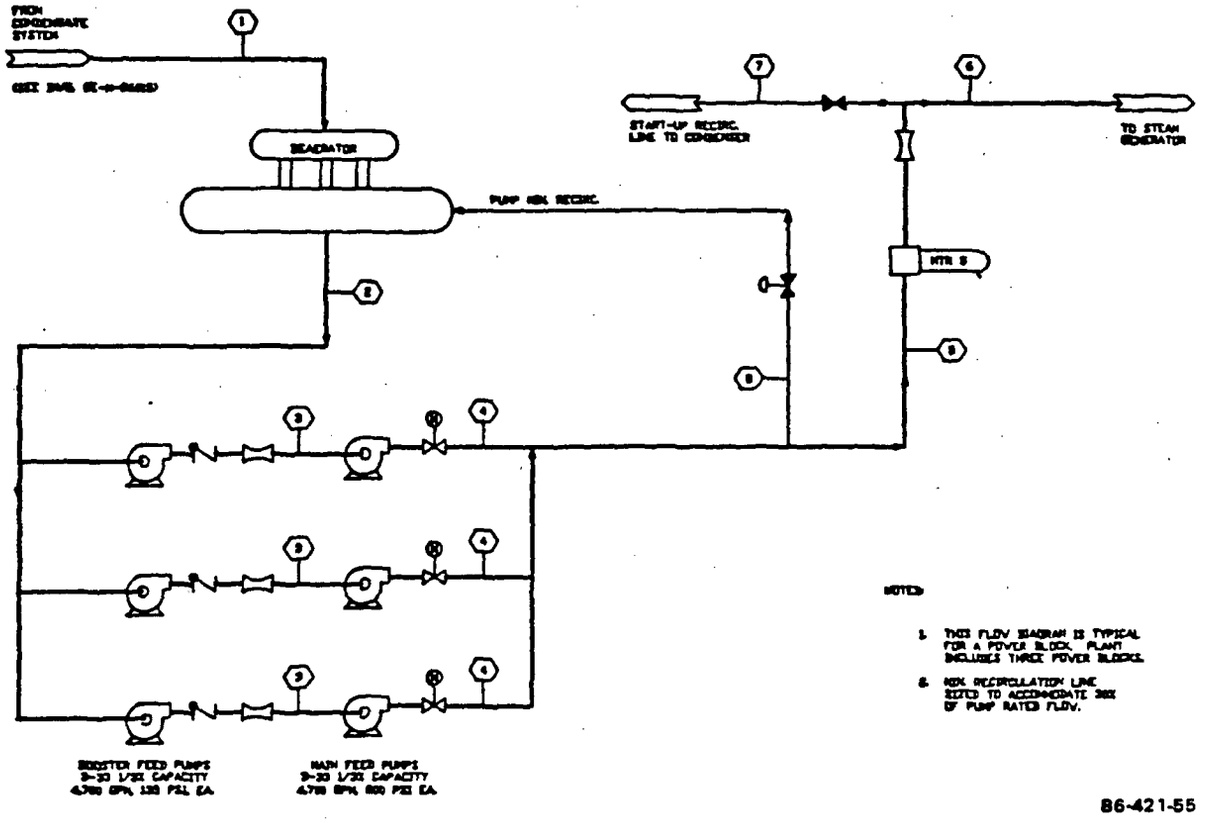

Figure 10.4–3 FEEDWATER SYSTEM FLOW DIAGRAM

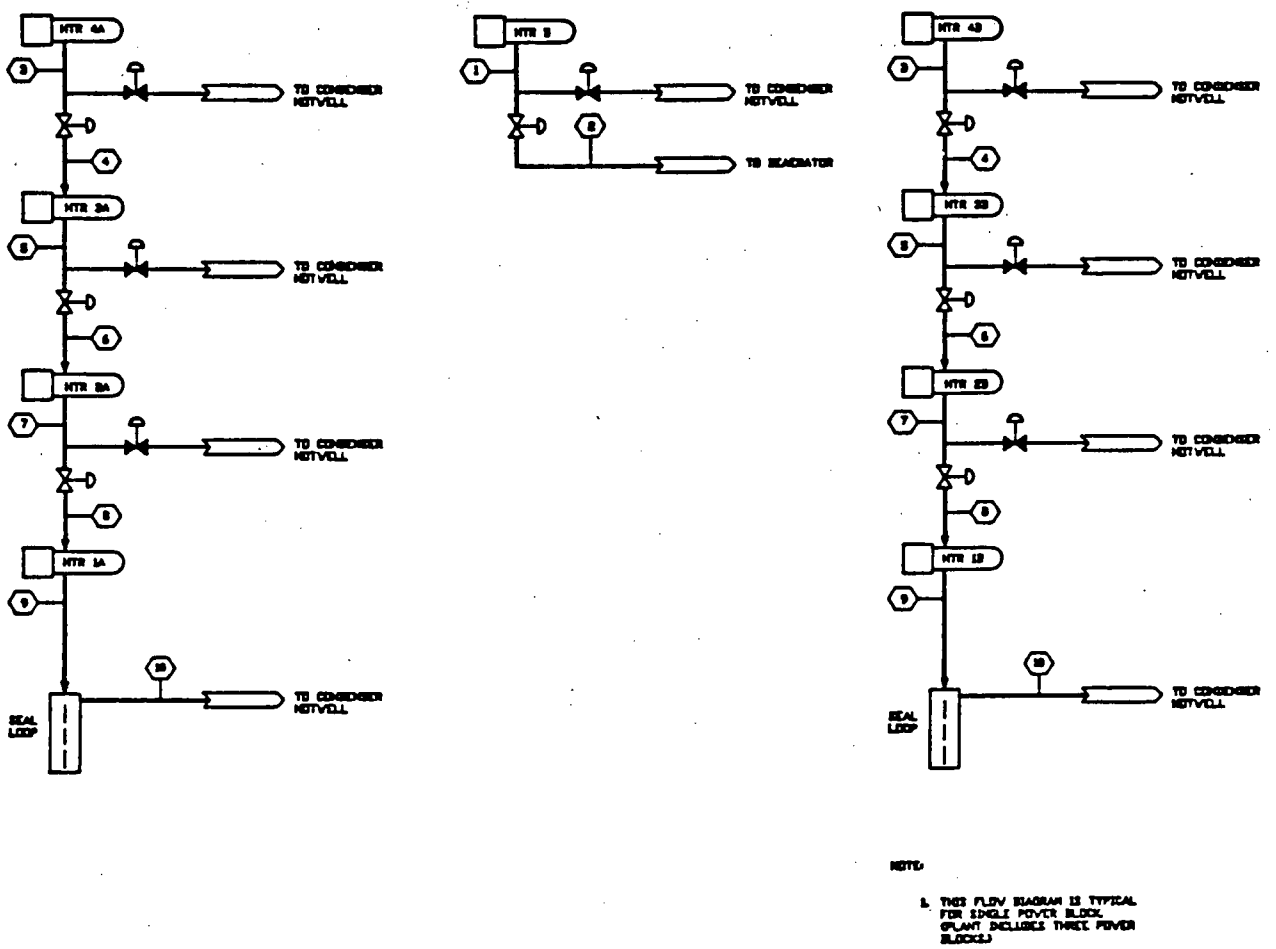

Figure 10.4–4 HEATER DRAINS SYSTEM FLOW DIAGRAM

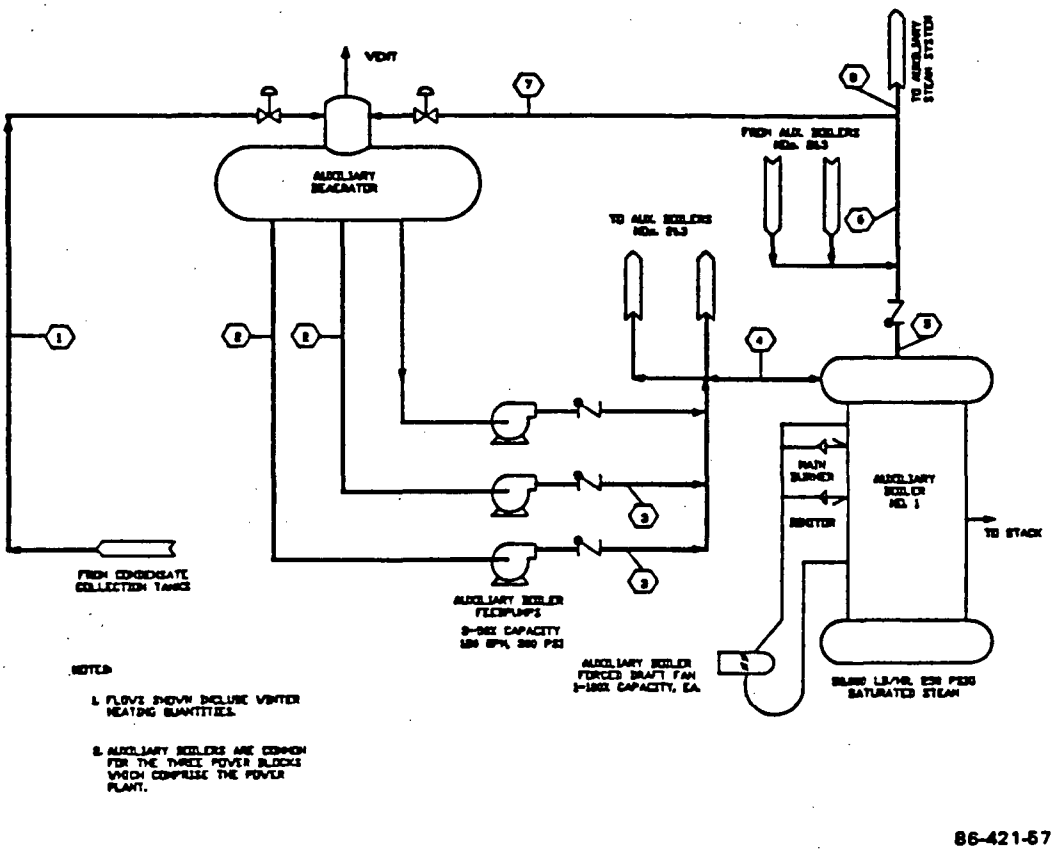

Figure 10.4–5 AUXILIARY STEAM SYSTEM

CHAPTER 11
RADIOACTIVE WASTE MANAGEMENT

CHAPTER 11

RADIOACTIVE WASTE MANAGEMENT

TABLE OF CONTENTS

11.1

Chapter 11 RADIOACTIVE WASTE MANAGEMENT

11.1 Liquid Waste Management Systems

11.1.1 Design Basis

The liquid radioactive waste system provides means for collecting, processing, storing, and disposing of radioactive liquid wastes to control radiation within the plant.

The liquid radioactive waste system is designed to provide reliable processing of collected liquid wastes to meet the requirements of 10 CFR 20 and the effluent objective of 10 CFR 50, Appendix I. The liquid radioactive waste system is not safety-related. It is designed in accordance with Regulatory Guide 1.143.

The liquid radioactive waste system disposes of the treated wastes after monitoring chemical, particulate, and radioactivity concentrations for conformance to 10 CFR 20 and 40 CFR 423.

11.1.2 System Description

The liquid radioactive waste system consists of two systems:

1. Intermediate/low activity level liquid (IALL/LALL) system
2. Detergent and decontamination liquid (DDL) system

Intermediate/Low Activity Level Liquid System. The primary source of IALL/LALL wastes are:

1. Component and equipment cleaning and decontamination
2. Laboratory drains

The liquid wastes are collected and stored in collection tanks. From the collection tanks the wastes are periodically processed through a demineralizer train consisting of pumps, filters and mixed bed demineralizers. The processed liquid wastes are stored in monitor tanks. The processed wastes are then sampled to ensure they meet the water quality requirements and radioactivity levels for discharge. If the processed wastes do not meet the discharge requirements, they are reprocessed through the demineralizer train. Once the process wastes meet the discharge requirements they are mixed with the cooling tower blowdown and discharged to the river.

Detergent and Decontamination Liquid System. The DDL system is used to process low activity liquids which contain detergents and other impurities which would rapidly degrade the IALL/LALL demineralizer resins. The primary sources of DDL wastes are:

1. Laundry
2. Showers
3. Hand washes
4. Equipment and area contamination where detergents are used

The liquid wastes are collected and stored in collection tanks. From the collection tanks the wastes are periodically processed through a filter and stored in a monitor tank. After sampling to ensure that the water quality requirements are met, the wastes can be recycled for further use or mixed with the cooling tower blowdown and discharged to the river. If the water quality requirements are not achieved the wastes are reprocessed until they meet these requirements.

11.2

11.2 Gaseous Waste Management Systems

11.2.1 Design Bases

The gaseous radioactive waste system provides means for collecting, processing, and disposing of radioactive gaseous wastes to control radiation within the plant. The gaseous radioactive waste system is designed to provide reliable processing of collected radioactive gaseous wastes to meet the requirements of 10 CFR 20 and the effluent design objective Appendix I.

The gaseous radioactive waste system is not safety-related. It is designed in accordance with Regulatory Guide 1.143.

11.2.2 System Description

The primary source of radioactive gaseous wastes is the reactor cover gas.

The PRISM reactor is designed to operate as a hermetically sealed system and is only opened annually for refueling. Thus, there is no feed/bleed of reactor cover gas during operation. The cover gas is replaced, prior to refueling, with clean gas.

A portable, vehicle mounted, helium gas supply system is provided to evacuate, purge and establish the reactor cover gas pressure at refueling. The system consists of a helium supply, filter, vacuum pump, receiver tank, vapor trap, compressor and storage/transfer tank.

Prior to refueling the reactor cover gas is evacuated from the reactor to the receiver tank through the vapor trap using the vacuum pump. From the receiver tank the cover gas is transferred to the helium storage/transfer tank using the compressor. The cover gas is replenished with clean helium. The radioactive reactor cover gas collected by the mobile unit is then transferred to the gaseous radioactive waste system for

processing. It is kept in storage for about 45 days for the radioactivity to decay to allowable levels. Then it is reused or discharged to the atmosphere through a monitored exhaust.

11.3

11.3 Solid Waste Management System

11.3.1 Design Bases

The solid radioactive waste system provides means for collecting and disposing of radioactive solid wastes to control radiation within the plant. It is designed to provide reliable collection and transfer of radioactive solid wastes to meet the requirements of 10 CFR 20 and 10 CFR 61.

The solid radioactive waste system is not safety-related. It is designed in accordance with Regulatory Guide 1.143.

11.3.2 System Description

The primary sources of solid radioactive wastes are:

1. Spent radwaste demineralizer resins
2. Spent radwaste filter cartridges
3. Sodium bearing radioactive solids from equipment cleaning
4. Compactible solids such as rags

The solid wastes are collected, processed, and packaged for shipment to a federal or state licensed burial site.

11.4 Process and Effluent Radiological Monitoring and Sampling Systems

11.4.1 Design Bases

The radiation monitoring system is designed to ensure radiation protection to plant personnel and the surrounding environment during all foreseeable operating and accident conditions. To meet this general requirement, the system design includes three basic equipment groups:

1. Area and airborne radiation instrumentation
2. Process radiation instrumentation
3. Effluent radiation instrumentation

11.4.2 System Description

The radiation monitoring system provides continuous area radiation monitoring within accessible cells located near radiation sources and where a significant increase in a gamma radiation level could occur (indicative of a process system failure). Continuous monitoring for airborne radioactivity is conducted (using mobile equipment) within the designated operating areas adjacent to potential radioactive sources. For further information on these systems, see Section 12.3.4.

Continuous radiation monitoring and sampling analysis of selected radioactive processes are performed. These monitors give early warning of process system malfunctions (abnormal conditions,) provide a signal for process control (if required,) and verify that the process product is suitable for release to the environment, if applicable.

Sampling and accompanying counting room analysis is performed at each plant effluent point which has the potential for radioactive release to determine the type and quantity of radioisotopes released to the environment. In addition, wide range detectors are provided to monitor a wide spectrum of design basis accident conditions.

CHAPTER 12
RADIATION PROTECTION

CHAPTER 12

RADIATION PROTECTION

TABLE OF CONTENTS

LIST OF TABLES

12.1

Chapter 12 RADIATION PROTECTION

12.1 Ensuring that Occupational Radiation Exposure are as Low as is Reasonably Achievable

12.1.1 Design Considerations

The basic design considerations to control occupational radiation exposure at the PRISM plant have the following objectives:

1. Minimizing the necessity for and amount of time spent in radiation areas

2. Minimizing radiation levels in routinely occupied areas and in the vicinity of plant equipment expected to require personnel attention.

3. Limiting occupational radiation exposure to less than 20 man-Rem per year

4. Meeting the requirements of 10CFR20 and 10CFR50 during plant operations, shutdown, and refueling

System, equipment and facility design requirements (Ref. 12.1-1) have been developed to incorporate these and other functional objectives during plant operations, including normal operations, refueling operations, fuel storage, in-service inspection, waste handling, storage and disposal, and anticipated operational occurrences. Key design requirements which contribute to reducing radiation exposures include:

1. Designing nuclear steam supply system (NSSS) components to operate for 60 years or to be replaceable.

2. Designing reactor coolant and intermediate coolant boundary components to permit periodic inspection and testing

3. Providing reactor coolant and cover gas purity control systems to monitor and maintain radionuclide concentrations below specified limits

4. Designing the reactor vessel auxiliary cooling system (RVACS) to permit periodic inspection

5. Designing the fuel storage, fuel handling and radioactivity control systems with suitable shielding and with a capability to permit periodic inspection and testing

6. Designing of the plant to include human factors

7. Designing primary pumps and intermediate heat exchangers to be removable

8. Designing the plant to perform maintenance activities with minimal exposure to radiation. This includes providing access space for inspection and maintenance. The use of remote maintenance techniques is to be considered only in those instances where direct access is not practical

9. Designing all plant control and reactor protection system (RPS) instrument sensors to be replaceable without disassembly of major components.

10. Arranging systems with consideration of constructability, maintenance, removal and replacement of major components.

11. Designing the plant to accommodate annual shutdown for inspection and maintenance of systems and components

12. Designing components which are part of the primary heat transport system (PHTS) boundary to permit 1) inservice inspection and testing and 2) appropriate material surveillance

13. Designing the NSSS to operate without active cover gas and sodium service (cleanup and level control) systems

14. Providing the fuel storage and handling system, radioactive waste system, and other systems which may contain radioactivity, with 1) capability to permit periodic inspection and testing, 2) shielding, and confinement and radiological monitoring

15. Designing the IHTS main loop with no isolation valves.

16. Providing a means to purify the module primary sodium inventory during shutdown

17. Locating all radwaste systems below grade in vaults or with curbs to prevent accidental release of radioactive liquids in the event of equipment failure.

In addition, many general design considerations to reduce exposures are incorporated when developing specific equipment and facility design features. For equipment, these include:

1. Reliability, long service life, maintenance and calibration requirements, and durability

2. Convenience for servicing, including disassembly and reassembly, modular design concepts for rapid component replacement and removal to a lower radiation area for servicing

3. Remote operation, inspection, monitoring, servicing and repair including the use of special tools or equipment

4. Isolation of components from radioactive process fluids

5. Use of high quality materials for components, such as valves, that minimize or preclude the leakage of radioactive liquids or gases

For facilities, examples include:

1. Location of equipment according to the need for access to maintain, inspect, monitor, or operate

2. Separation of radiation sources such as pipes, pumps, and storage tanks from normally low radiation areas

3. Provisions for platforms to enhance accessibility for inspection, maintenance, and repair of components

4. Use of labyrinth entrances to shielded cubicles

5. Use of local shielding for high radiation sources near components such as pipes, valves, pumps

6. Use of temporary shielding where permanent shielding is not practical.

12.1.2 Operational Considerations

Operational considerations include the development and implementation of plant operating procedures for the different activities associated with plant operations in order to incorporate exposure reducing methods as discussed in Regulatory Guides 8.8 (Ref. 12.1-1) and 8.10 (Ref. 12.1-2). These procedures include those for operations, maintenance, surveillance,

testing, fuel handling, emergencies, radiation protection, and administration. For example, station procedures for work in radiological areas are prepared to ensure that 1) applicable activities are completed with adequate preparation and planning, 2) work is performed with appropriate radiation protection recommendations and support, and 3) evaluations during post-work debriefings are used to identify improvements in future activities.

REFERENCES - Section 12.1

12.1-1 U. S. Nuclear Regulatory Commission. Information Relevant to Ensuring that Occupational Radiation Exposures at Nuclear Power Stations will be As Low As Is Reasonably Achievable. Regulatory Guide 8.8, Revision 3, Springfield, Virginia, June 1978.

12.1-2 U. S. Nuclear Regulatory Commission. Operating Philosophy for Maintaining Occupational Radiation Exposures As Low As Is Reasonably Achievable. Regulatory Guide 8.10, Revision 1. Springfield, Virginia, May 1977.

12.2 Radiation Sources

12.2.1 Contained Sources

This section identifies and discusses the contained radiation sources that form the basis for in-plant radiation protection. The initial sources of radioactive materials are a result of the reactor fuel fission process. Initial and derived radiation sources are categorized as follows:

1. Prompt neutron and gamma radiation

2. Fission products:

    a. Contained in fuel elements

    b. Released from fuel elements

3. Neutron activation products

    a. Reactor internals and structural material activation products

    b. Corrosion activation products

Prompt radiation sources are located in the reactor vessel. Activation products as well as fission products from leaking fuel, however, can be transported and distributed to other plant systems.

12.2.1.1 Normal Operation

Potential radiation sources during power operation include the reactor core, stored fuel, primary sodium, reactor vessel cover gas, primary sodium cold trap, and the radwaste systems. A brief description is given below.

Reactor Core and Stored Fuel Neutron Sources

The neutron flux at the core midplane of the reactor vessel outside surface is given in Table 12.1-1.

This flux is about 10,000 times less than that of a light water reactor due to thicker, more effective in-vessel radial shielding and the use of a smaller core. Neutron dose rates at various locations near the reactor vessel are listed in Table 12.2-2. These values include contributions from stored fuel neutron sources. As shown in the table, the in-vessel shielding reduces the neutron radiati to an insignificant level. On the other hand, the neutron dose rate at the core centerline directly below the vessel is very high, but no access is required at that location during power operation.

Reactor Core and Stored Fuel Gamma Sources

Gamma radiation from the reactor core during full power operation includes contributions from prompt gammas, capture gammas, and fission product decay gammas. Gamma dose rates at various locations on the reactor vessel surface are listed in Table 12.2-2. The results indicate that the distribution of the reactor core gamma radiation is similar to that of the neutron radiation, namely, the dose rate is insignificant above the vessel but very high directly below the vessel at the core centerline.

Stored fuel gamma activities can be estimated based on the core data listed in Table 12.2-3 for a partial core. The partial core consists of 25% of the fuel assemblies. The isotopic activity of a full core is obtained by multiplying the data from Table 12.2-3 by 4.

There are 42 fuel assemblies in the core and each fuel assembly consists of 271 fuel pins. Therefore, the gamma activities of a fuel assembly and a fuel pin can be obtained from Table 12.2-3 by using the following multiplication factors:

1. Fuel assembly: 4/42

2. Fuel pin: 4/(42 x 271)

Primary Sodium

The radioactive sources in primary sodium consist of activated sodium, transmuted sodium (neon-23) fission products from leaking fuel, and activated corrosion products. Preliminary estimates of these sources are given below.

The specific activities of activated Na24, Na22, and Ne23 are:

Na24: 31 mCi/cc
Na22: 4.7 μCi/cc
Ne23: 1.5 mCi/cc

Secondary Sodium

The activity of the secondary sodium is determined by the amount of in-vessel shielding provided to reduce neutron activation in the intermediate heat exchangers. The normal operation specific activities of Na24 and Na22 are:

Na24: 7.5×10^{-5} μCi/cc
Na22: 1.2×10^{-8} μCi/cc

The present design maintains the contact dose rate of the secondary sodium piping and that of the secondary sodium expansion tank below 0.2 mRem/hr.

Radwaste Systems

The radwaste systems of the PRISM design include the liquid radwaste system, the solid radwaste system, and the gaseous radwaste system.

The liquid radwaste system consists of two systems, namely, the Intermediate Activity Level Liquid/Low Activity Level Liquid (IALL/LALL) System, and the Detergent and Decontamination Liquid System (DDL). The design requirement for each system is to collect and process liquid radwastes of the following activity levels and quantities:

1. IALL/LALL system: up to 100 μCi/cc; 100,000 gallons per year
2. DDL system: less than 10^{-4} μCi/cc; 150,000 gallons per year

The solid radwaste system is designed to process and package solid radwastes for transfer to the fuel cycle facility for processing. The types of solid radwastes include spent resins, filter cartridges, metallic sodium, sodium bearing components and miscellaneous solids. For shielding analysis purposes, it is assumed that the dose rate of the IALL/LALL demineralizers will be operationally limited to 1,000 Rem/hr.

The inert gas receiving and processing system includes a mobile unit which collects and stores the reactor vessel cover gas prior to refueling. The radioactive cover gas is transferred from the mobile unit to the fuel cycle facility for processing. The storage tank on the mobile unit can hold 200 ft^3 gas at 250 psi.

12.2.1.2 Plant Shutdown

Major radioactive sources after plant shutdown or during refueling are: spent fuel assemblies during transfer operations; plateout and contained sources for equipment, piping and tanks; activated reactor internals; and radioactive materials in the radwaste processing systems. Radwaste system sources and contained sources in the primary system are outlined in paragraph 12.2.1. The other sources are discussed below.

<u>Spent Fuel Assemblies</u>

Spent fuel assemblies are stored in the reactor vessel before they are transferred to the Fuel Cycle Facility for processing. The isotopic activity of a spent fuel assembly can be obtained from Table 12.2-3.

Plateout Sources

Activated corrosion products in the primary sodium can plateout on the sodium wetted surfaces. The plateout sources are estimated to be:

Co60 : 1 $\mu Ci/cm^2$

Co58 : 3×10^{-2} $\mu Ci/cm^2$

Mn54 : 220 $\mu Ci/cm^2$ (cool surfaces)

Mn54: 25 $\mu Ci/cm^2$ (hot surfaces)

Activated Reactor Internals

Based on the reaction rates for neutron activation of Co58 and Ta181 in stainless steel and core neutron fluxes, the radioactivity levels of activated reactor internals are estimated to be:

Co60: 40 $\mu Ci/cc$

Ta182: 5.2 $\mu Ci/cc$

The results indicate that for components near the reactor core, the activation dose rate is approximately 2 Rem/hr on contact with a major in-vessel component.

12.2.2 Airborne Radioactive Material Sources

This section identifies and discusses the sources of airborne radioactive materials found in the various areas of the plant. These sources are the result of two processes:

1. Leakage from radioactive systems

2. Neutron activation of reactor cavity air

Essentially all sources of airborne radioactivity are found in the reactor, fuel cycle, reactor service, and radwaste buildings.

12.2.2.1 Equipment Leakage

The most significant equipment leakage sources are from the various radioactive gas containing systems. All gaseous system leakages relate to reactor cover gas. Potential locations include:

1. Containment boundary leakage

2. Leakage of dissolved gases from the sodium purification system

3. Leakage from the fuel transfer casks

4. Leakage from the mobile cover gas handling system

Gaseous leakages activity levels are dependent upon the activity that comes from the leaking fuel and accumulates in the cover gas. Systems which can leak gaseous activity are designed to be as leak tight as possible and the concentration of radioactivity in the cover gas is monitored and controlled by use of the cover gas cleanup system.

Equipment areas containing systems which are potential sources of leakage are provided with controlled ventilation systems. The use of activity and leakage control features as well as controlled ventilation systems ensure that airborne radioactivity levels in personnel access areas are maintained well within maximum permissible concentration (MPC) levels.

12.2.2.2 Air Activation Sources

Air circulating through the reactor vessel auxiliary cooling system (RVACS) flow passages can become neutron activated during transit through the reactor silo. The dominant isotope generated is Ar41. For a 1 sec irradiation period during transit, the Ar41 concentration at the exit of the RVACS is 2×10^{-20} Ci/cc. This is well below the MPC level for Ar41 in unrestricted areas of 4×10^{-14} Ci/cc.

Table 12.2-1

NEUTRON FLUX SPECTRA AT THE CORE MIDPLANE REACTOR VESSEL SURFACE

Neutron Energy	Neutron Flux ($n/cm^2/sec$)
Fast ($E > 1$ MeV)	3.6×10^3
Epithermal (2.4 eV $< E < 1$ MeV)	4.0×10^6
Thermal ($E < 2.4$ eV)	1.3×10^5

Table 12-2

NEUTRON AND GAMMA DOSE RATES NEAR REACTOR VESSEL

Dose Point Location	Radiation Source	Plant Status	Dose Rate (Rem/hr)
Core midplane at reactor vessel surface	Core neutrons	Operating	7×10^{1}
Core midplane at reactor vessel surface	Core gammas	Operating	4×10^{0}
Core midplane at reactor vessel surface	Na-24	Operating	3×10^{4}
Core midplane at reactor vessel surface	Co-60	Shutdown	1×10^{-1}
Core centerline below vessel	Core neutrons	Operating	2×10^{3}
Core centerline below vessel	Core gammas	Operating	1×10^{3}
Top surface of reactor enclosure	Core & stored Fuel neutrons	Operating	4×10^{-7}
Top surface of reactor enclosure	Na-24 (Direct)	Operating	2×10^{3}
Top surface of reactor enclosure	Na-24 (Streaming)	Operating	1×10^{-4}

Table 12.2-3

SPENT FUEL GAMMA ACTIVITY FOR 25 PERCENT OF CORE (1)

Gamma Energy (MeV)	Shutdown MeV/sec	Decay Time 24 hours MeV/sec	72 hours MeV/sec	1 Year MeV/sec
0.0-0.1	7.9E+16	6.9E+15	5.3E+15	3.3E+13
0.1-0.4	1.0E+18	1.7E+17	1.0E+17	3.9E+14
0.4-0.9	2.9E+18	6.8E+17	4.9E+17	2.2E+16
0.9-1.35	1.4E+18	6.8E+16	3.8E+16	9.7E+14
1.35-1.8	1.1E+18	1.8E+17	1.6E+17	4.1E+14
1.8-2.2	5.3E+17	8.3E+15	4.9E+15	5.0E+14
2.2-2.6	3.9E+17	1.3E+16	1.1E+16	5.6E+13
2.6-3.0	2.6E+17	2.2E+14	2.0E+14	1.4E+13
3.0-5.0	5.3E+17	1.0E+14	9.5E+13	1.7E+12
5.0-15.0	2.4E+16	0.0	0.0	0.0
Total	8.3E+18	1.1E+18	8.1E+17	2.5E+16

(1) Based on 25% of 42 assemblies with 271 fuel pins each.

12.3 Radiation Protection Design Features

This section describes the radiation protection design features relating to facility design, shielding, ventilation, area radiation and airborne radioactivity monitoring instrumentation which contribute to maintaining the annual average dose to station personnel to less than 20 man Rem per year.

12.3.1 Facility Design Features

Radiation protection design features include ease of accessibility to work, inspecton and sampling areas; the ability to reduce source intensity where operations must be performed; design measures to reduce the production, distribution and retention of activation corrosion products; provisions for portable or local shielding and remote handling procedures; and the reduction of time required for work in radiation fields.

The basic PRISM plant design offers many features that contribute to maintaining low occupational radiation exposure. The significant facility design features are described in the following subsections.

12.3.1.1 In-vessel Shielding

The in-vessel shielding consists of the upper axial, lower axial, replaceable radial, inner fixed radial and the ex-barrel shields. These shields minimize radiation exposure to plant personnel as well as minimize radiation damage and activation to near-core welds, load-bearing structures and other components.

The primary functions of the upper axial shield are to limit neutron activation of intermediate heat exchanger (IHX) secondary sodium and to limit neutron damage to the upper internal structure (UIS). The lower axial shield limits neutron damage to the core support structure and the associated welds.

The primary functions of the replaceable radial shield and the inner fixed radial shield are to limit neutron damage to the core barrel and associated welds and to limit neutron activation of the secondary sodium in the two intermediate heat exchangers. The ex-barrel shields limit activation of the dust in the RVACS air circuit.

12.3.1.2 Elimination of Reactor Vessel External Piping and Equipment

This is a key ALARA feature since by providing internal recirculation, primary sodium is confined to the reactor vessel. This eliminates large radiation sources from external primary sodium piping and also eliminates maintenance requirements on external pumps and valves. The reactor vessel containing all the primary sodium is shielded by in-vessel shielding and with simple external concrete shield configurations which help optimize the reactor building volume.

12.3.1.3 RVAC System Plenum and Duct Arrangement

There is a potential for radiation streaming through the RVAC ducts via scattering off structure walls into adjacent plant areas, since these ducts are connected to the reactor collector cylinder-containment vessel annulu. The plenum and duct arrangement reduces that streaming potential by including offsets and eliminating open access ways into duct areas.

12.3.1.4 Refueling Enclosure

The reactor modules are designed for in-place refueling and maintenance using a mobile refueling enclosure. The maximum design contact dose rate on the refueling enclosure is <0.25 mRem/hr.

12.3.1.5 In-Vessel Components

There are four major components in the reactor vessel that may require replacement and/or repair: primary pumps (4), intermediate heat exchangers (2), in-vessel transfer machine (1), and control rod drive lines (6). They are designed for ease of removal and storage in onsite silos. After a

sufficient storage period to allow for decay of major isotopes, they are decontaminated and residual sodium is removed prior to disposal. In addition, provisions are made to transport small components from the reactor to the decontamination area to minimize radiation exposure to operating personnel. Since these components may have been in the reactor vessel at full power for a relatively long time, decontamination may be required to lower the radiation level before any repair can proceed.

12.3.1.6 Radioactive Waste System

The principle design features for the radioactive waste system (RWS) to maintain low occupational radiation exposure are as follows:

1. Liquid radioactive waste system (LRWS) collection and process components are located in cells appropriately curbed to prevent the possibility of radioactive liquids inadvertently entering the environs in the event of process equipment failure.

2. Means are provided for collecting spent LRWS resins with the capability for solidifying and immobilizing them in DOT approved disposal containers.

3. Recirculation and wash water spray manifolds are provided for all LRWS collection tanks to maintain the suspension of solids, prevent accumulation of sediment within the tanks and for washdown and removal of sodium compounds from the vessel to permit required maintenance.

4. LRWS process piping conveying resins and slurries are sized to maintain pipeline velocities that will reduce the possibility of solid settling in the line and minimize erosion and radioactive hot spots.

5. Personnel and equipment access and operating space are provided to all LRWS tanks cells for routine maintenance, inspection, equipment calibration and decontamination.

6. Valves in the LRWS are located in areas of radiation Zone III or lower and where feasible, less than 10 mR/hr, to facilitate limited maintenance access.

7. The gaseous radioactive waste system (GRWS) components are located on a vehicle capable of moving between each of the reactors and the fuel cycle facility. The designed vehicle contact dose rate is <0.25 mRem/hr.

8. Remote handling equipment is provided for transfer of solid waste into the storage areas and from the storage area to the transportation vehicles.

9. Storage spaces are provided for packaged and compacted solid wastes. These spaces meet the shielding and radiation zoning requirements.

12.3.1.7 General Design Feataures

The following general design features are provided to maintain low occupational radiation exposures:

1. The reactor module and its interfacing systems are designed so that refueling or maintenance of any module can be performed without affecting the operation of any other module. The reactor module is also designed for in-place refueling and maintenance using a mobile refueling enclosure.

2. Adequate personnel access spaces are provided around major equipment and piping for inspection and maintenance activities.

3. The use of remote maintenance techniques is planned where direct access is not practical. Design features for maintainability are considered in the following order of preference:

   a. Adjust or repair in-place when practical.

b. Repair components by contact maintenance to the extent permissible.

c. Replace the component with spare unit (and then repair and requalify the disabled unit in low radiation area).

d. Remove the component for decontamination/repair by contact maintenance and replace the same component.

e. Replace components remotely.

f. Repair components in-place by remote maintenance (using manipulators and other remote-operated tools).

4. Radioactive equipment and systems are located and arranged in a manner which isolates the operating and maintenance galleries from the equipment to achieve as low a level of personnel radiation exposure as is reasonably achievable.

5. Auxiliary equipment and components, which are non-radioactive but accommodate the operational and safety requirements of radioactive equipment, are isolated from the radioactive components and piping. Shield walls, labyrinths, viewing windows and controls minimize plant personnel radiation exposure.

6. Radioactive piping is designed to eliminate dead legs and low points where radioactive materials may accumulate, and to segregate radioactive lines from non-radioactive lines. Routing of radioactive lines through non-radioactive area is restricted. Components and equipment are arranged to permit maintenance by providing flushing and decontamination connections.

7. Areas in which radioactive spills can contaminate the floor are fitted with decontamination, washdown, and radioactive liquid collection facilities. Additionally, floors in these areas are

designed to prevent the seepage and the spread of radioactive materials.

8. Radioactive systems and equipment are designed and selected to minimize leakage. Collection headers and equipment drip pans are provided to minimize the spread of radioactivity.

12.3.2 Shielding

This section describes the criteria, design bases and methodology of radiation shielding design to protect on-site personnel and the public from direct radiation originating inside the plant.

12.3.2.1 Shielding Design Objectives

Shielding design objectives during normal operation, including anticipated operational occurrences and plant shutdown, are:

1. Ensure that radiation exposures to plant operating personnel, administrators, visitors, contractors and proximate site boundary occupants are ALARA and within the guidelines of 10CFR20 and 40CFR190.

2. Ensure sufficient personnel access and occupancy time for normal anticipated surveillance, inspection, maintenance, repair and safety related test operations for each plant equipment and piping area.

3. Reduce potential equipment neutron activation and minimize the possibility of radiation damage to materials and components from neutron, gamma and beta exposures.

The shielding design objective for design basis events is to ensure that radiation exposures to the general public are within the guidelines of 10CFR100.

12.3.2.2 Federal Regulations

The specific federal regulations which apply to the radiation shielding design are summarized below.

10CFR20, Restricted Area Exposures. Per Section 20.101, exposure of an individual to radiation in restricted areas, for persons 18 years of age and older, is limited to:

1. Maximum of 1.25 Rem in any calendar quarter

2. Maximum of 3 Rem in any calendar quarter by providing Form NRC-4, provided the maximum accumulated occupational exposure is 5x(N-18) Rem, where "N" equals the individual's age in years.

10CFR20, Unrestricted Area Exposures. Per Section 20.105, permissible levels of radiation in unrestricted areas are:

1. Maximum 0.5 Rem in any calendar year

2. Maximum 2 mRem in any hour

3. Maximum 100 mRem in any week

40CFR190, Environmental Standards. Per Section 190.10, standards for plant normal power and shutdown operations are: "The annual dose equivalent shall not exceed 25 milliRems to the whole body, 75 milliRems to the thyroid, and 25 milliRems to any other organ of any member of the public as a result of exposure to planned discharges of radioactive material, radon and its daughter excepted, to the general environment from uranium fuel cycle operations and to radiation from these operations."

NRC Regulatory Guide 8.8, Radiation Shields and Geometry. Subsection 2b, of Section (C) provides guidelines on the use of shielding to reduce occupational radiation exposures in nuclear power stations. The radiation

shielding provided for the PRISM plant is based, in part, on the following Regulatory Guide 8.8 guidance:

1. Shielding design should be based on conservative assumptions for source quantities and geometries, and reliable calculational methods.

2. Personnel exposures can be reduced by providing one or a combination of: 1) permanent shielding between components, 2) temporary shielding around components, 3) distance between sources.

3. Streaming or scattering of radiation from locally shielded cubicles can be reduced by providing labyrinths.

4 Radiation streaming through penetrations can be reduced by: 1) location and/or 2) shielding.

5. Shielded pipe chases can be used to reduce radiation exposures from pipes carrying radioactive materials.

6. Shielding which must be removed to allow maintenance activities can be designed for rapid removal.

7. Piping from floor drains and sumps can be embedded in concrete or routed in pipe chases to provide shielding protection.

10CFR20, High Radiation Area Access Control. Per Section 20.203, entrances to high radiation areas shall be equipped with either:

1. A control device to reduce radiation levels to below 100 mRem per hour upon entry

2. An audible and/or visible alarm with both local and remote annunciation

3. A locked barrier with positive control

12.3.2.3 Shielding Design Methodology

Based on the source term activities described in Section 12.2, gamma ray source strengths are calculated using codes which compute the gamma-ray spectrum at several decay times for an initial isotopic distribution. Bulk shielding requirements are then determined by performing preliminary radiation transport calculations. The techniques employed in these calculations depend on the radiation type (neutron or gamma ray) and the radiation transport mechanism (direct shine or scatter).

Gamma ray attenuation through materials is evaluated using a three dimensional, multigroup, multiregion, gamma-ray attenuation code using the point kernal method. Neutron attenuation is calculated using the ANISN Code which solves the neutron and gamma one-dimensional Boltzmann transport equation for slab, cylindrical, or spherical geometry.

SPACETRAN II Code is used to estimate the direct neutron radiation within the reactor silo air space by calculating the energy dependent total flux from the surface of a cylinder at detector positions away from the surface. Gamma and neutron scattering off walls are estimated, based on simple albedo scatter formulas.

12.3.2.4 Radiation Zone Description

Radiation zones are defined by their associated radiation levels and access control restrictions. All interior plant areas which have well-defined physical boundaries such as rooms, cubicles and corridors are designated with a radiation zone classification based on the consideration of radiation level and access restrictions.

Areas are categorized as either "restricted" or "unrestricted" access areas. Restricted areas are those controlled for radiological protection as defined in 10CFR20, Section 20.3. All other areas are unrestricted and are classified as Radiation Zone I. As part of the basic design criteria,

Zone I areas will not house any radioactive sources, equipment, components, or tools. Restricted access areas are designated with Radiation Zone Classifications II through VIII based on the level of radiation produced by radioactivity in equipment or components located within the area. Table 12.3-1 summarizes the radiation zones and defines zone characteristics.

12.3.2.5 Shielding Design Description

12.3.2.5.1 Reactor Building

The seismic isolator area outside the reactor vessel at Elevation -34'-0" is not expected to require personnel access during power operation but requires access for periodic inspections following shutdown. A seismic isolator shield wall is provided between the isolators and the reactor vessel to allow access during shutdown.

The reactor silo annulus is Zone VIII during operation due to primary sodium radiation shine. This area has no designed personnel access path and does not have any equipment requiring access for maintenance or inspection.

The operating floor in the head access area at Elevation -15'-0" is Zone II during operation. Any highly radioactive piping which penetrates through the reactor vessel closure is locally shielded. During shutdown this operating floor area is also Zone II, with local shielding of spent fuel provided during fuel transfer operations. Intermediate sodium piping radiation levels are limited to Zone I levels by in-vessel shielding which controls neutron activation of the secondary sodium.

The top of the head access area roof at Elevation 0'-0" is shielded to Zone I levels. It is assumed that this is a potentially contaminated area during spent fuel and reactor internal removal activities and therefore requires radiological access controls. However, during power operation it is an unrestricted clean area and is shielded to Zone I.

12.3.2.5.2 Reactor Service Building

The maintenance facility at Elevation 0'-0" includes the washdown, the radioactive storage and compacted waste, and other potentially contaminated areas. The radioactive storage and compacted waste area is designated as Zone II. The remote shutdown room is Zone I. Access paths between Zone I and Zone II areas must be controlled in order to maintain a Zone I status.

12.3.2.5.3 Radioactive Waste Building

The Radioactive Waste Building, similar to the potentially contaminated areas of Reactor Service Building, is a controlled access area of Zone II or higher. Cubicles containing IALL/LALL System collection and monitoring tanks and pumps are Zone II during both plant operation and shutdown modes since waste processing is independent of plant operation. Demineralizers and filters for the IALL/LALL waste removal system are Zone II during operation and Zone III after drain and flush. The laundry area is designated as Zone II.

12.3.2.5.4 Steam Generator Building

All areas in the Steam Generator Building, as well as the associated Intermediate Heat Transport System (IHTS) pipeway, are designated as Zone I, thus personnel access is not radiologically restricted. This is based on the main contact dose rate of the secondary sodium piping of 0.2 mR/hr.

12.3.3 Ventilation Systems

Plant ventilation systems are designed to provide a suitable environment for personnel and equipment during normal plant operation and anticipated operational occurrences. Detailed heating, ventilating, and air conditioning (HVAC) system descriptions, will include compliance with and exceptions to Regulatory Guides 1.52 and 1.97.

12.3.3.1 Ventilation System Design Objective

Design objectives for ventilation systems include the following:

1. During normal operation and anticipated operational occurrences, the average and maximum airborne radioactivity levels to which plant personnel are exposed in restricted areas of the plant are as low as is reasonably achievable (ALARA) and within the limits specified in 10 CFR 20.

   The average and maximum airborne radioactivity levels in unrestricted areas of the plant during normal operation and anticipated operational occurrences are ALARA and within he limits of Appendix B, Table II of 10 CFR 20.

2. During normal operation and anticipated operational occurrences, the dose from concentrations of airborne radioactive material in unrestricted areas beyond the site boundary are ALARA and within the limits specified in 10 CFR 20 and 10 CFR 50.

3. The plant site dose guidelines of 10 CFR 100 are satisfied following those design basis accidents, described in Chapter 15, which involve a release of radioactivity from the plant.

12.3.3.2 Ventilation System Design Features

The following HVAC design features are provided to maintain plant personnel exposure ALARA:

1. Airflow is directed from areas with lesser potential for contamination to areas with greater potential for contamination.

2. For building compartments that have a potential for contamination, a negative pressure is maintained to minimize exfiltration of contaminants.

3. Ventilation system intakes are located so that intake of potentially contaminated air from other building or system exhaust points is minimized.

4. Ventilation fans, coolers and filters are provided with adequate spaces to permit easy access for maintenance, repair or replacement.

5. HVAC systems servicing non-radioactive systems or areas are located in low radiation zones to permit unrestricted accessibility.

6. To facilitate maintenance and in-place testing operations, air cleaning systems are designed in accordance with the guidance and recommendations of Regulatory Guide 1.40 (Ref. 12.3-2).

12.3.4 Area Radiation and Airborne Radioactivity Monitoring Instrumentation

12.3.4.1 Area Radiation Monitoring System

The area radiation monitoring system (ARMS) is provided to supplement the personnel and area radiation survey provisions of the plant radiation protection program, to ensure compliance with the personnel radiation protection guidelines of 10 CFR 20, 10 CFR 50, 10 CFR 70, and Regulatory Guides 8.2, 8.8, and 8.10. The ARMS has no function related to the safe shutdown of the plant, or to the quantitative monitoring of releases of radioactive material to the environment. The ARMS is designed to:

1. Monitor the radiation level in areas where radiation levels could become significant, and where personnel may be present

2. Alarm when the radiation levels exceed preset levels to warn of increased radiation levels

3. Provide a continuous record of radiation levels at key locations throughout the plant

4. Provide criticality warning for new and spent fuel storage areas

Area radiation monitors are provided in areas to which personnel normally have access, and in which there is a potential for personnel to receive radiation doses in excess of 10 CFR 20 limits in a short period of time because of system failure or improper personnel action. The detectors are located so that the flux measurement is as representative as possible of the area. The detectors are designed and manufactured to be suitable for their locations. Any plant area that meets one or more of the following criteria is monitored:

1. Zone II areas where personnel could otherwise unknowingly receive high levels of radiation exposure.

2. New and spent fuel handling areas.

12.3.4.2 Airborne Radioactive Monitoring System

Airborne radioactivity monitoring is provided in compliance with 10 CFR 20 and Regulatory Guide 8.2. The airborne radioactivity monitoring system monitors the air within an enclosure by either direct measurement of the enclosure atmosphere or the exhaust air from the enclosure. The system indicates and records the levels of airborne radioactivity, and, if abnormal levels occurs, actuates alarms. The system provides a continuous record of airborne radioactivity levels that will aid operating personnel in maintaining airborne radioactivity at the lowest practical level. The airborne radioactivity monitoring system is designed to:

1. Assist in maintaining occupational exposure to airborne contaminants ALARA

2. Monitor the integrity of systems containing radioactivity

3. Warn of unexpected release of airborne radioactivity to prevent inadvertent overexposure of plant personnel.

The airborne radioactivity monitors are provided in work areas where there is a potential for airborne radioactivity. Portable continuous air monitors are used in work areas where airborne monitoring is needed and fixed airborne radioactivity monitors are not installed.

REFERENCES - Section 12.3

12.3-1 U.S. Nuclear Regulatory Commission, Design Testing, and Maintenance Criteria for Normal Ventilation Exhaust Air Filtration and Adsorption Units of Light-Water-Cooled Nuclear Power Plants, Regulatory Guide 1.140, Revision 1. Springfield, VA, October 1979.

TABLE 12.3-1

PLANT RADIATION ZONING CLASSIFICATION

DESIGNATION	MAX. DESIGN DOSE RATE	DESCRIPTION	ESTIMATED[1] ACCESS TIME
I	≤0.25 mRem/hr	No radiation sources, no radiological control required	Unlimited
II	≤2.5 mRem/hr	Low radiation sources, radiological control required	40 hrs/wk
III	≤15 mRem/hr	Low to moderate radiation sources radiological control required	6 hrs/wk
IV	≤100 mRem/hr	Moderate radiation sources, radiological control required	1 hr/wk
V	≤1 Rem/hr	High radiation sources, radiological control required	5 hrs/yr
VI	≤10 Rem/hr	Very high radiation sources, radiological control required	Inaccessible
VII	≤100 Rem/hr	Extremely high radiation sources, radiological control required	Inaccessible
VIII	>100 Rem/hr	Extremely high radiation sources, radiological control required	Inaccessible

NOTES:

(1) The access time is based on an annual exposure limit of 5 Rem for plant operators and the maximum design dose rate per zone. For dose rates lower than maximum, access time per year can be estimated by:

$$\frac{5\ (R/year)}{\text{Calculated Dose Rate } (R/hr)} = \text{Access hours/Year}$$

CHAPTER 13
CONDUCT OF OPERATIONS

CHAPTER 13

CONDUCT OF OPERATION

TABLE OF CONTENTS

LIST OF TABLES

LIST OF FIGURES

13.1

Chapter 13 CONDUCT OF OPERATION

13.1 Emergency Planning

13.1.1 General

An emergency plan will be included in the PRISM Design Report that will be submitted in support of design certification. This plan will fulfill the requirements set forth in 10CFR50.47 and 10CFR50, Appendix E, for emergency planning. As specified in NUREG-0654-R1-1980, Criteria for Preparation and Evaluation of Radiological Emergency Response Plans and Preparedness in Support of Nuclear Power Plants, this plan will ensure that:

1. Adequate measures are taken to protect employees and the public.

2. All individuals having responsibilities during an accident are properly trained.

3. Procedures exist to provide the capability to cope with a spectrum of accidents ranging from those of little consequence to those associated with a major radioactive release to containment.

4. Equipment is available to detect, assess, and mitigate the consequences of such occurrences.

5. Emergency action levels and procedures are established to assist in making decisions.

13.1.2 Description of Evaluations for Emergency Planning

It is a design objective for PRISM to establish a design that does not require the emergency plan to include planning for evacuation and protective sheltering of the general public. Satisfying this objective will simplify the emergency plan and the applicant and regulatory efforts

necessary to obtain its approval with the numerous governmental agencies involved in emergency planning.

The guidance provided in 10CFR50, Appendix E, and the underlying technical basis for NUREG-0654-R1-1980 provided in NUREG 0396:EPA 520/1-78-016-1978 has been used, in part, as a basis for establishing the PRISM design characteristics that make the stated objective achievable.

In general, both the probability and consequences of postulated accidents are to be considered in establishing the emergency plans and specifically the need to include evacuation planning and sheltering in such plans.

The inherent protection features in PRISM, including its small size, large heat capacity, low primary coolant pressure, inherent reactivity shutdown and shutdown heat removal system, seismic isolation, and factory-fabricated containment barrier reduce the probability of core damage and large radioactivity release to vanishing small probabilities. These design characteristics also contribute to making any postulated emergency event a slow developing scenario that provides an indefinitely long time period for emergency action, even during station blackout without significant radioactivity release off-site.

The aspects of the design have been evaluated in the conceptual PRA in Appendix A to this PSID. The importance of evacuation actions have been specifically measured by performing a sensitivity study that compares the impact or risk of including or excluding evacuation actions. Table 13.1-1 compares selected results from these analyses and shows that for PRISM, evacuation and sheltering are not significant to the control of public risk.

As described in the approach to safety in Chapter 15 of this PSID, it is intended that the risk assessment will continue to be developed with the design. Both its detail and precision will increase as the PRISM design matures and the confidence in the analyses measuring the importance of evacuation and sheltering will also increase. It is through these

analyses and the underlying quantitative consequence and reliability analyses, along with the successful conduct of the PRISM safety test, that will provide the data base that will support that PRISM plants will not need evacuation and sheltering planning in the emergency plan to assure adequate protection of the public health and safety.

TABLE 13.1-1

SENSITIVITY OF RISK TO EVACUATION ASSUMPTION

	No Evacuation	Evacuation
Expected Value for Number of Fatalities per Reactor Year		
Early	3×10^{-8}	$<10^{-10}$
Latent	2×10^{-4}	2×10^{-4}
Individual Risk		
Probability of Early Fatality per Reactor Year	5×10^{-11}	$<10^{-13}$
Probability of Latent Fatality per Reactor Year	5×10^{-11}	4×10^{-11}

13.2

13.2 Description of Operational Modes

Plant operation is directed from the control center in the plant control building. The plant operating procedures and diagnostics are automated to the extent that an operating staff of not more than three licensed reactor operators and a senior operator as shift supervisor is required in the control center. These operators will direct the plant which consists of three power blocks and their supporting systems. Each power block includes three reactor modules, three steam generators, and one turbine-generator.

The following level of automated control is being implemented in the design of the control center and plant control system:

1. Automatic coordination of power block operation (overall plant control)

2. Automatic coordination of the NSSS and BOP and automatic apportionment of load to the turbine-generator sets and to the reactor modules (power block control)

3. Automatic operation of all power train systems in the power range (25% to 100% load), including rod profile adjustments

4. Automatic turbine-generator warm-up, rolling and synchronization on demand

5. Automatic reactor warm-up on demand

6. Automatic reactor startup on demand (from subcriticality through 2%)

7. Automatic startup, including venting and draining of main steam, extraction, turbine and bypass control, FW and condensate systems.

Figure 13.2-1 provides an illustrated overview of the General Electric control engine that implements these automated functions. This control engine is a set of distributed digital computers that the control center operator interfaces with.

13.2.1 Normal Startup

Plant startup is directed from the control center. One or more reactor modules of each power block will be normally operating at full power and startup will usually consist of bringing a single reactor module or the particular power block's turbine-generator to power. A simultaneous startup of the entire plant (nine reactor modules and the associated turbine-generator) will occur much less frequently.

The plant control system provides a high level of automation. During startup, the operations of major plant systems will be semi-automatically sequenced and directed between predetermined hold points. An operator permissive is required to continue the startup sequence from each hold point. This method of operation frees the operator from executing laborious manual control adjustments and directly initiating each operational step. This permits the operator to closely monitor the plant's state and uses the built-in plant control system diagnostic aids to detect anomalous plant conditions.

Prior to commencing startup, it is verified that the main and auxiliary plant systems are available for operation, with appropriate liquid inventories, etc. Before the reactor module startup the primary and intermediate sodium pumps are energized to provide rated sodium flows. Rated sodium flows will be maintained during the entire startup and power operation period, simplifying control and startup procedures. The constant speed steam generator recirculation pump is started prior to reactor module startup, requiring no additional recirculation flow control actions during plant startup. Three one-third capacity feedwater pumps and three one-third capacity condensate pumps are used in the main feedwater train of each power block. Depending on plant power level, one, two or all three of each type of pump will be used. The feedwater flow into each steam

generator is controlled by parallel startup and power range control valves. The smaller startup control valve is modulated to maintain steam drum level for power levels less than approximately 10% of rated module power level. As module power levels increase and the feedwater flow requirements exceed the startup valve capacity, feedwater flow control will be transferred to the larger control valve, and the smaller valve is closed. This feedwater flow control maintains the appropriate steam drum liquid level in each integral drum/steam generator during the ascent to rated power. Maintaining the measurable drum level at a desired setpoint provides a simple direct control of feedwater during reactor module startup.

Following initial control rod tests and subcritical physics checks the reactor modules are brought critical through automatically controlled, small, one rod-at-a-time, control rod withdrawals. The rods are alternately withdrawn in a star pattern, and the individual rod positions are maintained within a close tolerance of the other rod positions. Multiple design features are used to prevent or limit undesired reactor module power excursions. These include plant control system computer calculated limits and trips as well as backup plant protection system trips and reactor module inherent safety features.

As reactor module power is increased, primary and intermediate hot leg sodium temperatures will increase as shown in Figure 13.2-2. Since the sodium flows are nearly constant, the hot leg sodium temperature increase profiles are essentially linear with module power increase. The normal heat removal path during startup is through the sodium loops and the steam generator system. As reactor module power increases, steam flow commences. At low power levels steam flow from the steam generating system steam drum is directed to the main condenser via the steam bypass valves. The bypass valves modulate to maintain the main steam header pressure at 1000 psia. At a total block power level of approximately 12% of rated, the main turbine (which has been earlier pre-warmed and turned at low speed) is brought up to synchronous speed and loaded at its minimum stable loading of approximately 10% of rated. As the turbine is loaded the bypass steam flow decreases (as shown in Figure 13.2-3), maintaining a constant main steam header pressure.

Since main steam header pressure is maintained essentially constant, the corresponding saturated steam temperature (545°F) is maintained during startup. This permits individual reactor modules to be brought to power without requiring the individual steam generators to be isolated until steam generator outlet steam temperatures are matched, as would be required in a multi-module plant using superheated steam.

Following turbine loading and operator permissive to increase power, the individual modules and plant are brought to rated power at a nominal 1%/minute rate. Operational diagnostic aids include continuous automatic checks to assure that key plant variables and their rates of change are within appropriate ranges. The operators are provided appropriate overview and, if desired, detailed displays of plant information on interactive video display units mounted on the control center operating consoles. Local displays are also available near plant components to assist roving operators and maintainers. These displays aid any on-line maintenance of replacement of failed components within the redundant, self checking, fault tolerant plant control systems.

13.2.2 Load Following

PRISM plant will normally be operated as a base loaded plant, but capable of part-load operation. The plant will be capable of load following at 1%/minute between 25% and 100% of rated load to accommodate grid power demand changes or lower weekend power needs. During automatic operation PRISM will be capable of making 5% load changes at a faster rate of 20%/minute.

Load follow demands are implemented by varying turbine steam flow control valve positions, resulting in the desired electrical power change. Coordinated changes in reactor module power are made by movement of the reactor module primary control rods.

13.2.3 Shutdown

Shutdown operations generally are a reverse sequence of the startup operations outlined in Section 13.1. Fewer operator hold points are required during shutdown. As an example, individual reactor modules can be made subcritical without an operator permissive near the point of criticality.

Individual reactor modules may be shutdown or tripped without adversely affecting the state of the other reactor modules. Normal shutdown decay heat removal uses the path through the main condenser out to the final atmospheric heat sink. Should this path be unavailable, heat can be removed by the auxiliary cooling system which utilizes external air cooling of the steam generator. If the intermediate heat transport loop is not available, the reactor vessel auxiliary cooling system (RVACS) using natural circulation air cooling of the reactor guard vessel can be used. To maintain adequate long-term temperatures of the sodium systems at low levels of reactor decay heating, trace heaters are used to maintain sodium line temperatures at approximately 500°F awaiting future startup.

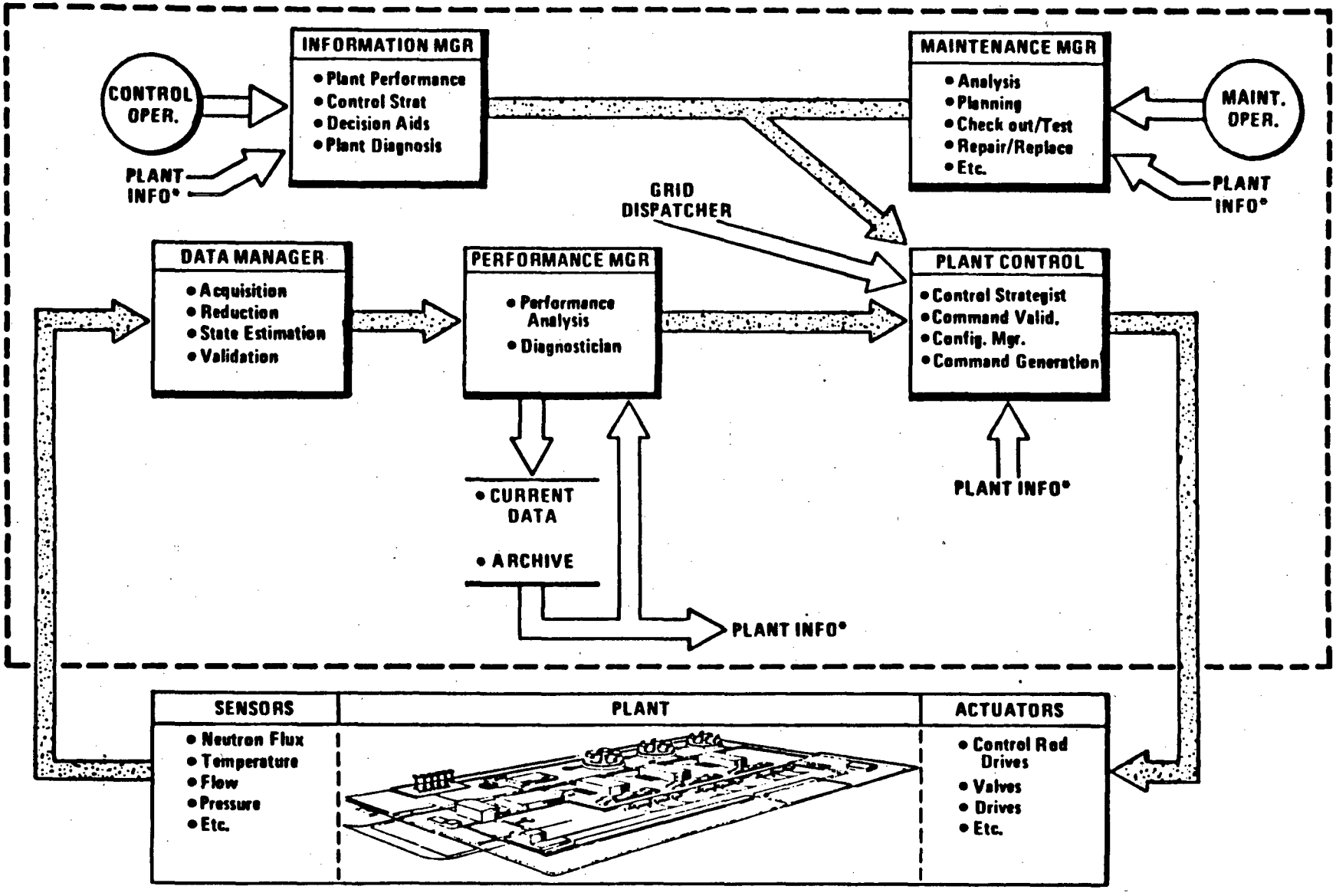

86 368 09

Figure 13.2–1 AUTOMATED CONTROL OVERVIEW

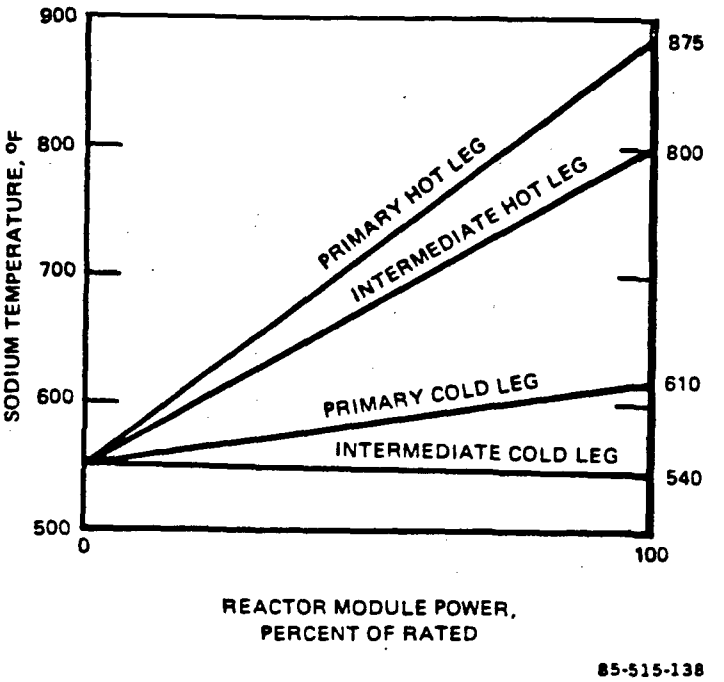

Figure 13.2–2 PART LOAD SODIUM TEMPERATURE PROFILE

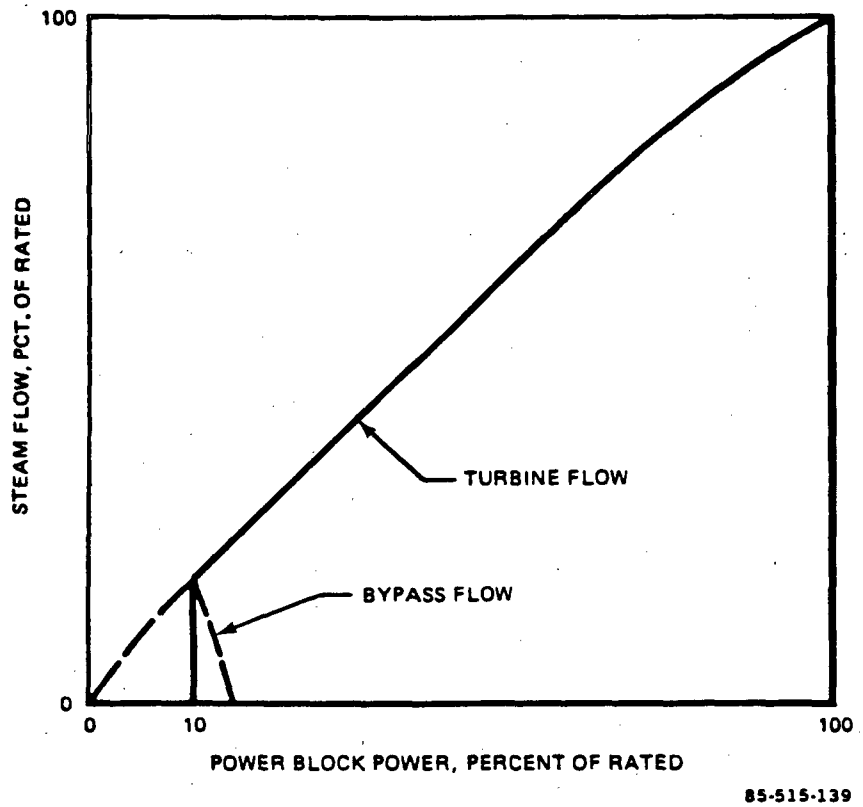

Figure 13.2–3 PART LOAD STEAM FLOW PROFILE

13.3

13.3 Security Preliminary Planning

Refer to Appendix C for a summary of the safeguards and security report that will be transmitted under separate cover.

CHAPTER 14
SAFETY TEST PROGRAM

CHAPTER 14

SAFETY TEST PROGRAM

TABLE OF CONTENTS

TABLE OF CONTENTS (Continued)

TABLE OF CONTENTS (Continued)

LIST OF TABLES

LIST OF FIGURES

LIST OF FIGURES (Continued)

14.1

CHAPTER 14 SAFETY TEST PROGRAM

14.1 Introduction and Summary

14.1.1 Overall Program

The objectives of the safety test program are to demonstrate, with a test of the standard PRISM design, the safety characteristics of PRISM and establish the data base required to obtain its certification (prior to committing to commercial plant construction). The safety test is to be unlicensed and conducted at a Department of Energy National Laboratory site under DOE regulations.

The main elements of the safety test program are the test and evaluation plan, the test article and the test facility.

The test and evaluation plan is dedicated to ensuring that the testing, the supporting analyses, surveillance activities and data output are sufficient to meet the certification objective.

The test article is the reactor module and associated nuclear servicing equipment. It will consist of a full-scale prototypical standard PRISM reactor module and the associated support and isolation structures, reactor vessel auxiliary cooling system (RVACS) structure, and module instrumentation.

The test facility is the site plus all the facilities and equipment interfacing with the test article that required to conduct the tests. In the design of the test facility, effective use will be made of existing facilities and services including fuel and liquid metal handling capabilities.

14.1.2 Description of Tests

Testing is composed of three phases - conventional testing phase, benchmark testing phase, and safety testing phase. The conventional testing

phase consists of: preoperational testing, baselining of in-service inspections, hot functional testing, fuel loading and startup testing. This phase will be similar to that done for FFTF and EBR-II.

The benchmark testing phase consists of tests to measure and verify the inherent response characteristics of the PRISM reactor (reactivity feedback and structural response) and to verify performance of the decay heat removal system (RVACS operation). Reactivity feedback tests will establish baseline data on reactivity as a function of: (1) radial temperature gradients, (2) core radial and axial expansions, (3) core bulk temperature, (4) core power level (power coefficient), and (5) core flow level (flow coefficient).

As part of the benchmark testing, heat transfer characteristics and heat rejection rates of RVACS and the normal heat rejection system will be obtained to verify their performance capabilities. The tests will show that the test article responds and behaves within predetermined bounds of performance before proceeding with the safety testing phase.

The safety testing phase will demonstrate the safe response of the test article under design and beyond design basis events. Tests covering design basis events are: (1) normal scram transients, (2) single rod withdrawal with scram, and (3) loss of intermediate heat transport system (IHTS) cooling with scram. These tests envelop the design duty cycles for normal operation, anticipated scram events and unlikely accidents and will demonstrate PRISM's longer term decay heat removal capabilities.

Safety testing covering beyond design basis events (BDBE) are: (1) single rod withdrawal without scram, (2) loss of IHTS cooling without scram, (3) loss of flow without scram, (4) single rod withdrawal and loss of flow (coastdown of primary and IHTS pumps) without scram, (5) loss of flow and IHTS cooling without scram, (6) single rod withdrawal and loss of power (coastdown of sodium and water pumps) without scram, and (7) degraded RVAC performance with loss of IHTS cooling with scram. The BDBE related tests will be conducted to demonstrate the inherent capability of the test article to prevent core damage.

14.1.3 Test Article Description

The test article, as noted in Section 14.1.1, consists of a full-scale prototypical standard PRISM reactor module and the associated support and isolation structures, RVACS structure, and module instrumentation. The major elements of the reactor module are:

1. Reactor vessel, deck and rotatable plug
2. Containment vessel
3. Intermediate heat exchangers (2)
4. Electromagnetic pumps (4) and their flow coastdown power supplies
5. Reactor core (425 MWt) with metal fuel
6. Upper and lower internal structures
7. Fuel transfer machines
8. Control rod system
9. Control, reactor protection and instrumentation systems

The reactor module is top supported from the deck, which is anchored to the silo structure. The module is about 20 feet in diameter and 60 feet long. The module is factory built and shipped to the site ready for installation.

The reference core for PRISM is a heterogeneous, metal alloy fuel design with 42 fuel assemblies, 25 internal blanket assemblies, 36 radial blanket assemblies, 60 removable radial shield assemblies, and 6 control/shutdown assemblies. The core is designed to produce 425 MWt with an average temperature rise of 265°F. The core height is 46 inches. Fuel and internal blanket life is 60 months and the refueling interval is 20 months. Radial blanket life is 100 months.

The test article includes the PRISM seismic isolation system. Isolators chosen for the PRISM design significantly reduce the lateral seismic loads on the reactor structure and internals. This leads to simpler reactor component designs and increased design margins. By lowering the natural frequency of the isolator below the natural frequency of the reactor structures, amplification of lateral seismic loads is eliminated.

This approach is expected to facilitate siting of a standardized design on a variety of plant sites.

The RVACS is a highly reliable heat removal system which maximizes the use of inherent and passive features to provide core cooling. The RVACS is composed of ducts, plena, and a collection cylinder to circulate air by natural convection for emergency reactor shutdown cooling. Main features of the RVACS are the eight vertical ducts (four inlets and four outlets), two horizontal plena below the head access area floor, and the collector cylinder which surrounds the containment vessel. In the event of a total loss of heat removal from the intermediate heat transfer system, RVACS continues to operate passively to remove reactor decay heat. All of these structures will be included in the test article.

14.1.4 Heat Dump Options

Two heat dump system options for transporting the heat from the reactor and rejecting it to ambient air are under evaluation. These are: 1) a dump steam generator (DSG) system with a full-size steam generator and 2) a dump heat exchanger (DHX) system based on the FFTF design.

14.1.4.1 Dump Steam Generator System

The dump steam generator option (shown in Figure 14.1-1) consists of an intermediate heat transport system and a full size (432 MWt) steam generator system. The reference steam generator is comprised of straight tubes with double-walled construction to provide a double barrier between the sodium and steam/water throughout the steam generator. Heat is transported from the reactor via the intermediate heat exchanger by the intermediate sodium system to the steam generator. Steam is delivered to a condenser which is cooled with water and a cooling tower system for heat rejection to the atmosphere. A sodium-water reaction pressure relief subsystem (SWRPRS) is provided in the event of a steam/water-to-sodium leak in the steam generator. The condenser will be sized to provide for transient overpower testing beyond the nominal (432 MWt) thermal rating of the steam generator.

The auxiliary steam, feedwater, blowdown, and cooling water systems service the steam generator so that it simulates actual power block performance. The system features steam pressure reduction valves that can be programmed to simulate the effects of a turbine on the steam generator; a high pressure, water-cooled condenser; feedwater pumps and high-pressure feedwater heater; feedwater and steam drum control interfaced with the control for the reactor system; a blowdown system and demineralizer to provide for the control of feedwater impurities; and a cooling water/cooling tower system to control condenser pressure and to dissipate the reactor heat to the environment.

14.1.4.2 *Dump Heat Exchanger System*

The dump heat exchanger option is comprised of three intermediate loops and 12 sodium-to-air heat exchangers. The system transports the heat from the reactor to sodium-to-air heat exchangers for heat rejection to ambient air. A single piping segment (prototypic of the PRISM design) connects the reactor, via the IHX, with the three DHX loops. Each DHX loop has a pump, four sodium-to-air heat exchangers, and isolation valves. A line diagram of the system is shown in Figure 14.1-2.

The nominal heat rejection capacity of the heat sink is 520 MWt. This is about 20% higher than the nominal PRISM module rating and is provided in order to enable transient overpower testing to be completed.

14.1.4.3 Assessment

Either approach to providing the heat dump can meet the technical testing requirements. Final selection of a specific design will be a programmatic decision related to programmatic cost benefits.

14.1.5 Site Assessment

Two specific site options have been evaluated; one adjacent to FFTF at Hanford and one adjacent to EBR-II at INEL. Additional INEL site options are also being considered. The location of the PRISM test facility

relative to EBR-II at the INEL site evaluated is adjacent to the northeast corner of the existing EBR-II site. Access to the facility would be controlled through the existing security building and guardhouse. All major equipment, including the PRISM reactor module, would be brought to the site from the nearest rail head over road by multi-axled transporter.

The location of the test facility relative to FFTF is adjacent to the northwest corner of the existing site and would require the relocation of the permanent security fence. The PRISM test facility would have a separate security building and guardhouse and a parking lot for access from outside the site, but could also be accessed directly from within the overall FFTF site. The facility would be close enough to FFTF facilities to allow use of the existing facilities and services. All large equipment, including the PRISM reactor module, would be brought by barge on the Columbia River to Richland and then by rail to the site. Construction of a short railroad spur off the existing FFTF spur would be required.

The following key aspects were examined for the INEL and HEDL sites: (1) DOE approvals; (2) site characteristics (e.g., geology); (3) shipment of large components; (4) prospects for in situ seismic testing; (5) shared facilities and (6) fuel cycle support. Based on this assessment, the two sites are nearly equal in terms of site characteristics, potential for seismic testing and shared facilities. None of the site characteristics examined (physiography, geology, climatology, seismological considerations, demographic considerations and water availability versus requirements) were found to be limiting nor substantially different between sites. The HEDL site is more accessible for shipment of large components. The major advantage of the INEL site is fuel cycle support for PRISM's reference metal fuel.

14.1.6 Facility Arrangements and Structures

For the purposes of evaluation of heat dump options, the INEL/EBR-II site specific arrangements for the PRISM test facility were developed for the two types of heat dumps--dump steam generator and dump heat exchanger. The two arrangements are summarized in the next paragraphs.

The facility arrangement for the dump steam generator system, located at the INEL/EBR-II site is shown in Figure 14.1-3. This option employs the PRISM design reactor building, steam generator building, and the IHTS piping tunnel connecting the two structures. Other key buildings are the condenser building and the cooling tower.

The facility arrangement for the dump heat exchanger system, also located at INEL/EBR-II site, is shown in Figure 14.1-4 This option employs a fully prototypic reactor building and IHTS piping tunnel. Other key buildings are the intermediate loop pump building and the three banks of sodium-to-air heat exchangers.

Common to both arrangements are: (1) the reactor service building which houses equipment for temporary storage of new and spent fuel and (2) radwaste storage building for temporary holding of radwaste until transfer to the host site radwaste processing. Also common are the primary sodium processing building and control building.

Existing INEL/EBR-II facilities and services to be shared with the PRISM test facility and not included in Figures 14.1-3 and 14.1-4 are:

1. Fuel Cycle Facility
2. Radwaste Processing
3. Maintenance Building
4. Fire Water System
5. Water Storage Tanks
6. 115 kW Electrical Station
7. Na Receiving and Handling Equipment
8. Waste Water Treatment and Holding Basin
9. Sewage Treatment Plant
10. Percolation Ponds
11. Security Building and Guardhouse
12. Cafeteria

14.1.7 Fuel Handling

The fuel handling methods and equipment for the test facility are prototypic to those for the PRISM plant. New, reprocessed fuel is brought to the PRISM test facility by transfer from the host site new fuel receiving and storage area. Following receipt of the new fuel assemblies, the elements are placed in the reactor service building or directly transported to the reactor module. For refueling, new fuel assemblies are placed in the fuel transfer cask for transport to the reactor module. Spent fuel from the reactor is housed in a fuel transfer cask and brought to the reactor service building by the cask transporter. Spent fuel can be transferred directly or remain in temporary storage in the reactor service building.

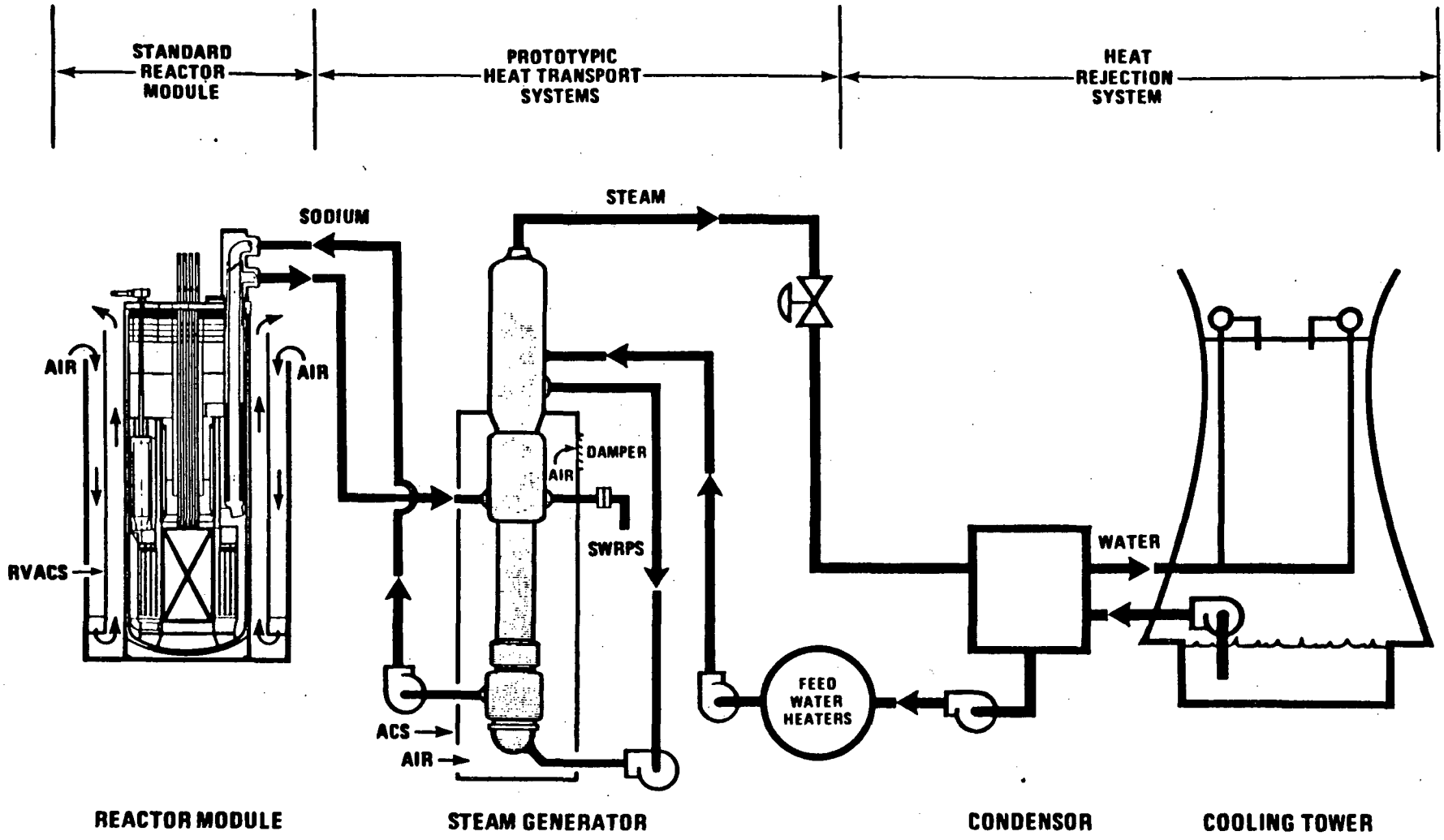

Figure 14.1–1 PRISM TEST DUMP STEAM GENERATOR SYSTEM DIAGRAM

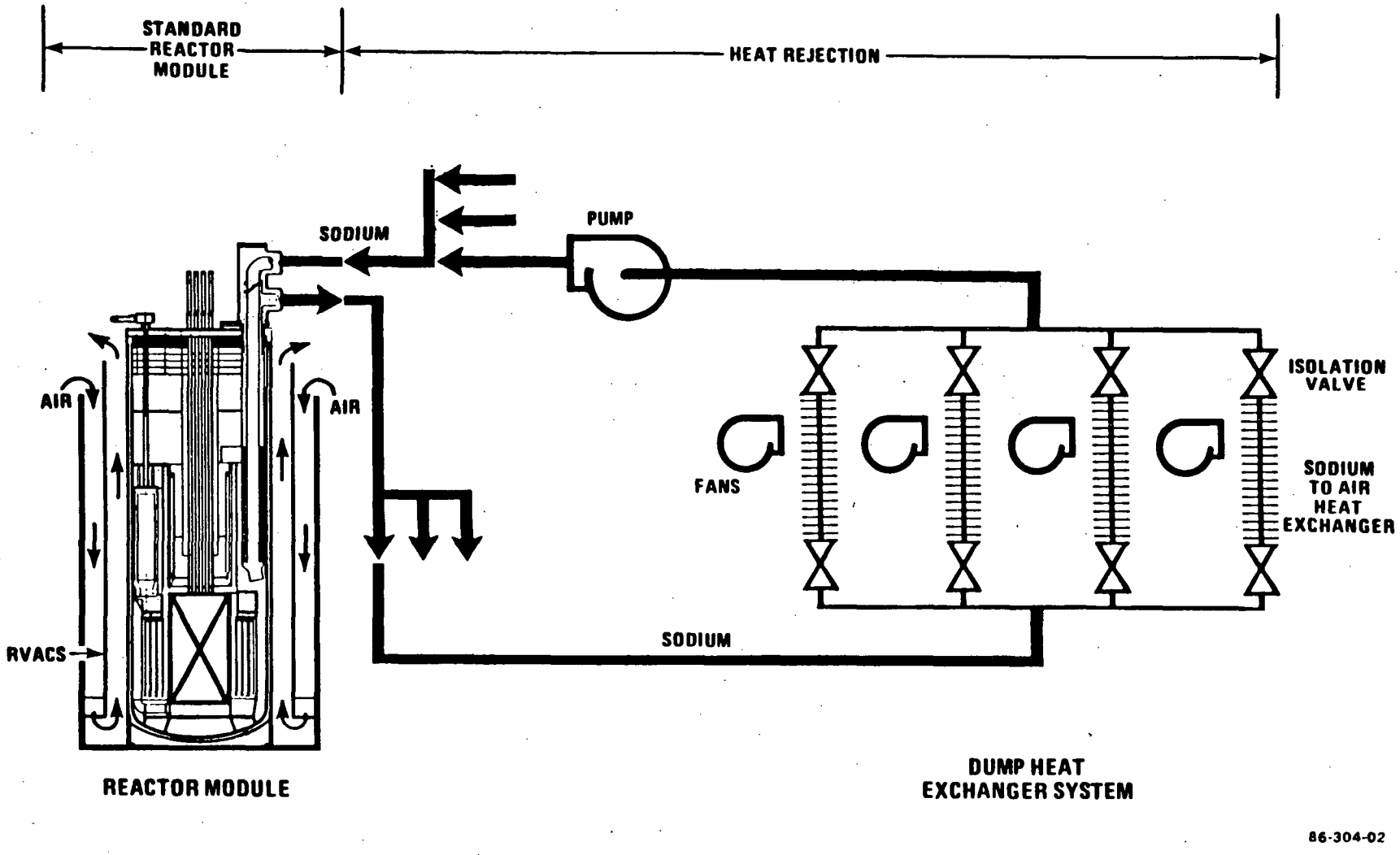

Figure 14.1–2 PRISM TEST DUMP HEAT EXCHANGER SYSTEM DIAGRAM

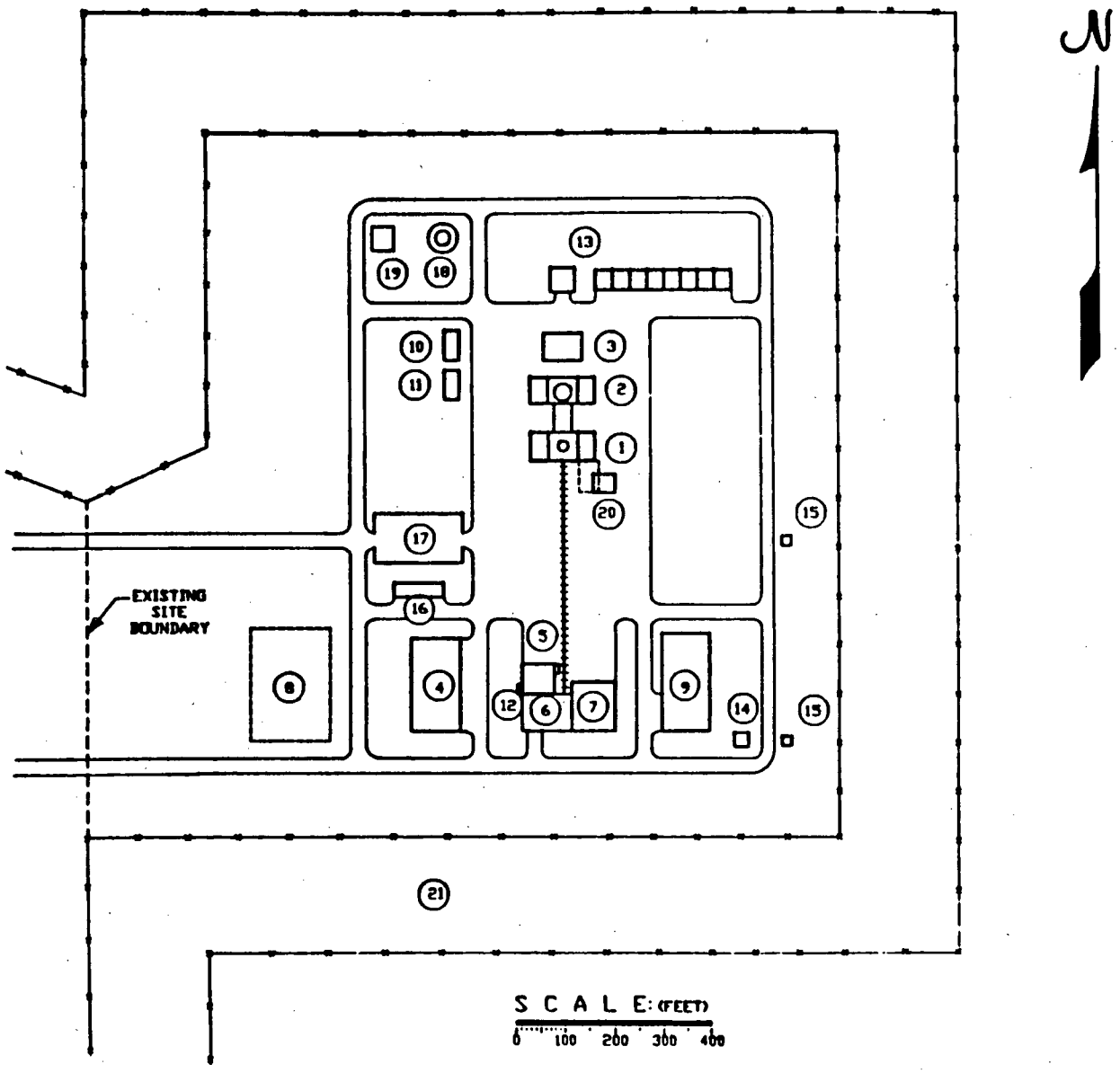

LEGEND

1. REACTOR BUILDING
2. STEAM GENERATOR BLDG.
3. CONDENSER/FEEDWATER BLDG.
4. CONTROL BLDG.
5. N.I. PERS. SERV. BLDG.
6. REACTOR SERVICE BLDG.
7. RADWASTE STORAGE BLDG.
8. ADMINISTRATION COMPLEX
9. WAREHOUSE
10. AUXILIARY BOILER BLDG.
11. WATER TREATMENT BLDG.
12. REMOTE SHUTDOWN AREA
13. COOLING TOWER/CIRC. WATER HOUSE
14. INERT GAS STORAGE AREA
15. WATER SUPPLY WELLS (2)
16. Na RECEIVING & HANDLING STATION
17. RECEIVING & ASSEMBLY AREA
18. FUEL OIL STORAGE TANK
19. DIESEL GENERATOR BLDG.
20. PRI. SOD. PROCESSING BLDG.
21. PROTECTED AREA CORRIDOR

86-304-03

Figure 14.1–3 PRISM TEST FACILITY WITH DUMP STEAM GENERATOR SYSTEM LOCATED ON INEL/EBR-II SITE

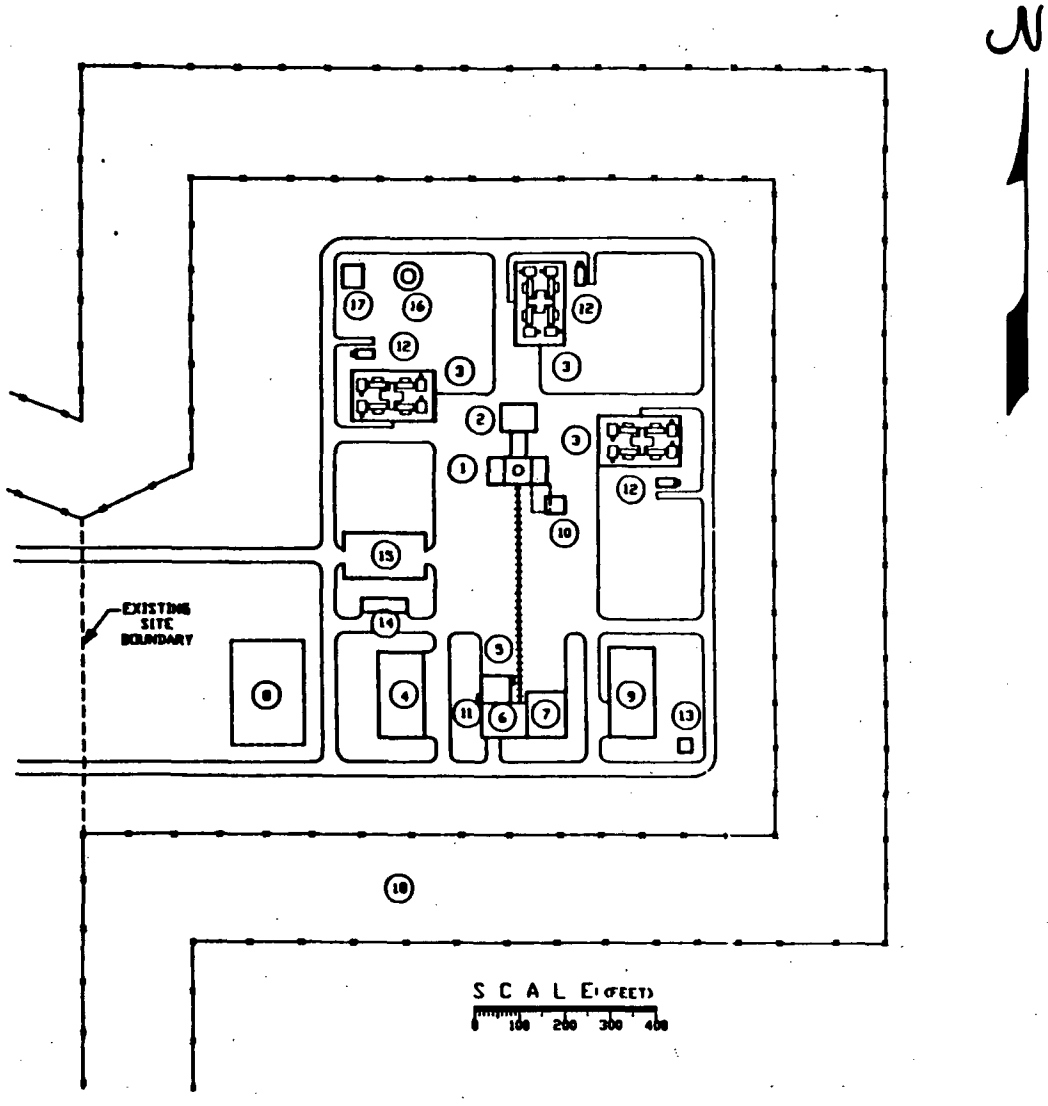

LEGEND

1. REACTOR BUILDING
2. INT. Na PUMP HOUSE & SOD. STORAGE
3. AIR DUMP HEAT EXCHANGER (3)
4. CONTROL BLDG.
5. N.I. PERS. SERV. BLDG.
6. REACTOR SERVICE BLDG.
7. RADWASTE STORAGE BLDG.
8. ADMINISTRATION COMPLEX
9. WAREHOUSE
10. PRI. SOD. PROCESSING BLDG.
11. REMOTE SHUTDOWN AREA
12. 2.4kV TRANSFORMER STATION
13. INERT GAS STORAGE
14. Na RECEIVING & HANDLING STATION
15. RECEIVING & ASSEMBLY AREA
16. FUEL OIL STORAGE TANK
17. DIESEL GENERATOR BLDG.
18. PROTECTED AREA CORRIDOR

86-304-04

Figure 14.1–4 PRISM TEST FACILITY WITH DUMP HEAT EXCHANGER SYSTEM LOCATED ON INEL/EBR-II SITE

14.2

14.2 Test and Evaluation Plan

The approach employed for the safety test is to perform tests of selected design basis events (DBE) and beyond design basis events (BDBE) to demonstrate the reactor's inherent safety characteristics. These tests, in conjunction with supporting scale model testing, component testing, and key feature testing, will provide the necessary validation of the PRISM transient performance and the basis for PRISM certification. The specific scale model and component/feature tests presently being considered are discussed in Appendix 14A. Other development needed in support of the safety test is addressed in Appendix 14B.

14.2.1 Overview

The test and evaluation plan includes: 1) a description of the overall safety test program, 2) a description of the key tests, 3) a review of the test data to be obtained, and 4) a test evaluation plan.

The overall test program, summarized in Table 14.2-1, consists of three testing phases: conventional testing, safety benchmark testing, and the safety tests. In addition to the testing are corresponding surveillance activities.

The testing shown in Table 14.2-1 was arrived at by examining startup test programs for commercial power reactors, testing proposed for CRBRP, the extensive testing carried out by FFTF during the initial core characterization program and the current inherent safety test program, the recent shutdown heat removal test (SHRT) series at EBR-II, and testing at other LMR's. The initial focus has been directed at the selection of the transients to be tested during the safety test phase.

The events of interest for defining the safety phase transients are those postulated sequences which challenge the design and provide a basis for methods and prediction verification. Table 14.2-2 defines the event categories considered.

Events were identified for systems, components or structures that have key safety functions associated with reactor shutdown, shutdown heat removal and control of radiological releases. Safety functions were identified for each system, component or structure. At this conceptual design stage, events are assessed to identify their potential to impair a safety-related function. Event selection was based on engineering experience with analyses of similar events on comparable systems. The selection of events is aided by a systematic review of the following resources:

1. PRISM duty cycle events Appendix D
2. Events utilized for the Clinch River Breeder Reactor Plant (Reference 14.2-1)
3. Light water reactor events identified in the Standard Review Plan (Reference 14.2-2)
4. Assessment of events unique to PRISM
5. Events generic to all nuclear reactors, including sabotage and other external sources
6. The U. S. Atomic Energy Commission list of representative types of LMR events (Reference 14.2-3)

In summary, those identified reactor transient events which challenge and have a definable impact on the safety-related systems associated with reactor shutdown, shutdown heat removal, and control of radiological releases have been included in the initial list of events or are enveloped by an event on the list of events. The only events which are excluded as potential safety tests are those which would be better conducted by means other than with the safety test facility. The latter category of testing is summarized in Appendix 14A.

14.2.2 Description of Tests

14.2.2.1 Conventional Testing Phase

The conventional tests, applicable to any reactor startup, will be completed before initiating the safety tests. The conventional testing phase consists of: preoperational testing, baseline in-service

inspections, hot functional testing, fuel loading and startup testing. It is expected that this phase of the testing will be similar to that done for FFTF, EBR-II, and SEFOR.

Preoperational Testing

The objective of this testing phase is to demonstrate the capability of structures, systems and components to meet performance requirements, including safety-related requirements, in all operating modes and throughout the full design operating range to the extent that they can be tested without taking the reactor critical. These tests are used to demonstrate that individual system performance is acceptable and that the facility is ready for hot functional testing and initial fuel loading. The testing will commence during the construction phase, as the systems and their supporting subsystems become available, and as all related construction acceptance testing has been completed. Where there has been modular fabrication of systems, preoperational tests will commence in the fabrication shop.

Preoperational testing consists of mechanical system tests, electrical system tests, instrumentation and control system tests, facility protection system tests and fuel handling system tests. The preoperational tests will check flow paths, alarms and protective circuitry under conditions as close to operating conditions as possible. Testing will include, as appropriate, manual operation, operation of systems and components within systems, automatic operation, operation in all alternate or secondary modes of control and operation and verification tests to demonstrate expected operation following loss of power sources and degraded modes for which the systems are designed to remain operational. The tests will also include, as appropriate, verification of the proper functioning of instrumentation and controls, interlocks and equipment protective devices whose malfunction or premature actuation may shut down or defeat the operation of systems or equipment. System vibration, expansion and restraint tests will be conducted.

Baseline In-Service Inspection

The objective of this inspection phase is to provide a preservice baseline inspection against which all future in-service inspections can be compared to determine the extent of any service-induced degradation.

These tests will be performed on a continuous basis during the construction phase. They will be performed as specified, and with the equipment specified in the facility operating and maintenance procedures. Improvements identified during testing will be included in the facility procedures.

Hot Functional Testing

The objective of this test is operate the key system of the facility to near normal operating conditions prior to fuel loading. In particular, an objective is to run the primary coolant systems at full reactor inlet temperature and design pressure. Heat will be supplied by the cold leg sodium pump. Selected systems will be operated in both normal and abnormal modes to demonstrate key safety performance characteristics such as in-vessel natural circulation and RVACS heat removal/natural circulation capabilities, control system and reactivity control system performance. After completion of the hot flow test, selected components will be inspected for damage. Baseline in-service inspection conditions will be measured at an isothermal refueling temperature.

Special core assemblies will be installed to simulate the pressure drop through the core during the hot flow test.

Fuel Loading

The objective of this phase is to load the core into the reactor and make all initial preparations for taking the reactor to critical conditions.

Fuel loading can start only after all preoperational tests have been satisfactorily completed for the systems and components associated with safe operation of the reactor and with fuel handling. All fuel loading and related procedures will be prepared and approved, and the fuel handling crew trained in their duties, including emergency procedures. Radiation monitors, nuclear instrumentation, and radiation control equipment will be calibrated, tested, and verified. Fuel handling equipment will be checked and dry runs completed. The fuel, blanket, control and shield assemblies will be inspected. The status of all systems required for fuel load will be verified. As fuel loading progresses, neutron flux monitoring will be performed periodically and the results analyzed and compared with predictions before additional fuel loading performed.

Startup Testing

The objective of this phase is to achieve criticality and bring the reactor to 100% power in stages.

There are three phases to startup testing: approach to criticality testing, low power testing and power ascension testing. After control rod installation and fuel loading are completed, additional tests are performed to characterize the core neutronics, measure control rod worths, and check the reactor instrumentation. The reactor is then brought critical by withdrawing the control rods. Measurements are made throughout the rod travel, and the measured criticality is compared to prediction.

After criticality, low power testing (about 10% power or less) will be performed to: 1) confirm the design, and, to the extent practical, validate the analytical models and verify the correctness or conservatism of assumptions used in the plant safety analysis and 2) confirm the operability of plant systems and design features that could not be completely tested during the preoperational test phase due to lack of adequate heat and a representative core.

A series of zero and low power tests will be performed, such as pulsed source measurements, differential rod worth measurements, neutron flux mapping and reactivity coefficient measurements. The control rod drives will be tested.

After low power testing is complete, the facility will be brought to 100% power in a series of discrete power level stages (typically 25%, 50%, 75% and 100% power levels). Major testing will be performed at each power level before proceeding to the next higher power level. The power ascension tests will include neutronics measurements, system performance tests, and transient response tests. The neutronics measurements will include measurements of reactivity coefficients, differential control rod, worth, and radiation levels (shielding survey). Performance tests will be performed on the heat dump system, primary coolant system, plant instrumentation, the reactor vessel, and plant automatic controls. Analyses will be made of chemical impurities and gaseous fission products in the primary coolant. Where preoperational and low power testing proved inadequate to confirm the design, validate the analytical codes, or verify the correctness or conservatism of the safety analysis, additional tests would be performed for this purpose - where practical - during the power ascension tests.

This startup test phase will be completed when the reactor is at 100% power and selected duty cycles have been run.

14.2.2.2 Safety Benchmark Testing Phase

The objectives of these tests are to measure and verify the inherent response and performance characteristics of the reactor (reactivity feedback, RVACS performance, and possibly structural and seismic response). Each of the above must be shown to respond and behave within acceptable predetermined bounds of performance before proceeding to the safety tests phase.

Inherent Response Characterization Testing

The specific tests for characterizing inherent response are:

(A) Reactivity Feedback Tests

Reactivity feedback characterization tests will be conducted to establish reference data on the reactivity as a function of:

1. Radial temperature gradients.
2. Core radial and axial expansions.
3. Core bulk temperature.
4. Core power level (power coefficient)
5. Core flow level (flow coefficient)

Testing methodology under development to measure these reactivity effects is discussed in Appendix 14B.

(B) Potential Structural Response

A natural frequency sweep will be conducted on the prototype module to determine the natural frequencies of the module and internal components over the range of 1 to 33 Hz. Single frequency excitation will be applied to selected components at critical frequencies. Static deflections will be applied to the reactor module to determine the as-built stiffness of the support and seismic isolation structure and the flexibilities of attachments to the reactor module relative to fixed structures. The frequency sweeps, excitations and static deflection tests will be used to verify the analytical prediction of dynamic response behavior.

Performance Verification Testing

The specific tests for verifying inherent response are:

(A) Shutdown Heat Removal

Heat transfer characteristics and heat rejection capability of the reactor vessel auxiliary cooling system (RVACS) and normal heat rejection system capabilities will be obtained. Specific measurements for RVACS will be made of the conductivity paths, radiant and convective heat transfer to and from the containment vessel and collection cylinder and natural circulation flow on the airside of the vessel and within the reactor vessel. These data, coupled with component test data, will verify decay heat removal capability prior to conducting the actual safety demonstrations.

(B) Potential Seismic Response Tests

There are three groups of objectives for the seismic response tests. The first group of objectives are those of the module itself to verify seismic isolation, including damping characteristics, structure stiffness and natural frequency, interface displacements, and the loads transmitted to major components. The second group of objectives pertain to the major reactor components to verify 1) the reactor support arrangement (seismic isolators, inner silo and containment vessel), 2) RVACS structural integrity, 3) pressure boundary structural integrity (reactor vessel, closure head and piping connections), and 4) loads transmitted to internal components. Finally, the third group of objectives corresponds to the reactor internals to verify: 1) transient power oscillations from core deformations, 2) functional capability for rod insertion, 3) fuel clad structural integrity, 4) internal support structural adequacy, and 5) coolant path integrity .

The module related test objectives can be satisfied by either scale model testing or by reduced load testing on the prototype module, except for loads transmitted to the major components. Scale model tests, components testing, or in situ testing of PRISM are considered to be potentially viable approaches to verification of the loads transmitted to internal components and to satisfaction of the reactor internals related test objectives.

PRISM's seismic isolation capability will be verified by component testing of the seismic isolators. In situ seismic testing is being considered as a potential supplement to the component tests.

14.2.2.3 Safety Tests Phase

Basis of Safety Tests

The objective of the safety tests is to demonstrate the safety response of the PRISM nuclear steam supply system under normal and abnormal operation conditions. Two groups of tests, DBE's and BDBE's, are planned as defined in this section. Non-performance related accidents are not included in the safety test program. Where appropriate, such tests (e.g., degraded RVACS performance due to a sodium fire and aerosol event) are better conducted outside the safety test itself. Such testing is summarized in Appendix 14A.

The safety tests definitions include the initial plant operating conditions and the transient conditions for the systems undergoing the test. The systems or components that affect the safety performance of the module are:

1. Reactor (core system)
2. Primary sodium pump (primary flow)
3. RVACS (air heat rejection)
4. Intermediate sodium pump (intermediate flow)
5. Steam generator/condenser (main heat rejection)
6. Reactor control system
7. Reactivity control system
8. Reactor protection system

For the tests, it is assumed that the range of system operations will be limited by the normal PRISM reactor protection system (RPS) as modified for the specified test. Also, no operator action will normally be required, although manual scram and technical specifications for selected parameters will be supplied for each test.

The test program is based on the concept of "enveloping" as a means to reduce the number of safety tests. However, the less severe scenarios will be run first before the more severe and lower probability events, to minimize the risk of damaging the test facility. Test sequence planning will be supported by pretest analyses and tests will be conducted initially at reduced reactor power to prevent damage to the test article. The data collected will be sufficient to verify the adequacy of the PRISM transient performance increase confidence relative to the performance for the more severe tests.

Classification of Safety Tests

The safety test phase is divided into two categories as shown in Table 14.2-3. The DBE's envelop the design duty cycles for normal operation, anticipated scram events and unlikely accidents. These tests will be conducted with reactor scram. Thus, it demonstrates the longer term decay heat removal capabilities of the PRISM design under normal and accident conditions.

The normal scram transient is an anticipated event in that it will envelop about 98% of the plant duty cycle events during the life of the plant. This includes normal plant shutdown, turbine-generator trip and all single mode equipment failure events which lead to the reactor shutdown. The normal scram test will verify the overall shutdown characteristics of the PRISM design.

Transient overpower events will be simulated by the single rod withdrawal tests. This covers the reactivity insertion associated with SSE core compaction.

The loss of IHTS with full primary flow test envelops all transients resulted from a total or partial loss of the main heat transport system. It also envelops the loss of off-site power event. Decay heat removal will be accomplished through a long heatup transient of the module with peak coolant temperature reached in about twenty hours.

BDBE's have extremely low probabilities of occurrence. With the exception of the RVACS test, the tests for the BDBE will be conducted without reactor scram to demonstrate the short-term inherent response of the PRISM module which will prevent core damage in the accident. This will be accomplished by adjusting RPS trip settings as required.

Basic initiating events for tests of BDBE's are single rod withdrawal and loss of IHTS, similar to those for the design basis tests. However, the number of event response tests are expanded to six to include a combination of events such as a flow coastdown and loss of power. The single rod withdrawal with loss of power, for instance, is conducted to envelope the event of SSE core compaction accompanied by loss of off-site power. For the RVACS study, the probability of a degraded RVACS performance is extremely low. Therefore, the RVACS test will be conducted with reactor scram without heat removal by the non-safety IHTS.

Safety Tests Acceptance Criteria

The acceptance criteria for the safety tests are defined in the terms of fuel temperature, and cooling temperature limits. The peak temperature limits will be defined as the details of the safety tests evolve.

Test Conditions

The conditions of the safety tests are defined and summarized in Table 14.2-4 This is a preliminary list of tests which is the starting point for the evaluation and safety test selection plan described in Section 14.2.4.2. The tests are divided into three groups in accordance to their classification and level of power for the tests. The first group are the design basis tests which start as low as 30% of reactor full power and full flow conditions to simulate the part load temperature conditions before proceeding to the full power test. The results for these tests are expected to be well below their acceptable test criteria. For the test description in this section, however, only the full power case will be described.

The second group are the BDBE's which are also expected to have acceptable peak cladding temperature and coolant temperature during the transient. Like the first group, these tests will also proceed with the 30% power before eventually running the full power tests.

The third group are BDBE tests of complex and severe scenarios. The probabilities of occurrence of the events these tests represent are extremely low. To minimize potential damage to the test facility, the maximum reactor power for these tests is currently limited to 60% for conservatism. This actual test limit will be established as defined by the analysis described in the evaluation plan given in Section 14.2.4. Full power conditions will be assessed analytically. For the RVACS test, with reactor scram, the reactor power is assumed at 60% while the transient will be initiated at 100%, 70% and 40% of air inlet flow area.

(A) Normal Scram Transient

Starting with full power operation, the normal scram test is initiated by a scram signal generated for the RPS to scram the reactor, the primary pumps, intermediate pump and the recirc pump if the dump steam generator option is used for the normal heat rejection. Otherwise, heat rejection rate for the heat dump system must be reduced to simulate the transient. The reactor system will be cooled to the hot standby temperature of 550°F. Reactor decay power will be removed primarily through the main heat transport loop while the RVACS rejects a small portion of the decay power to air.

(B) Single Rod Withdrawal With Scram

Transient overpower events for PRISM will be simulated by the single rod withdrawal test. This covers reactivity insertion due to SSE core compaction. In the full power test, the transient is initiated by a single rod withdrawal which causes the RPS to scram the reactor. After the reactor scram, the primary pump, intermediate pump and recirc pump (for the dump steam generator option) will be tripped. The event then is reduced to one similar to the normal scram transient.

(C) Loss of IHTS With Scram

This failure event envelopes the transient resulting from loss of the IHTS. Normally, after a reactor scram, the RPS will also trip the primary pumps; however, this test will investigate the effects of a delay in shutting off the primary pumps.

In the full power test, the transient is initiated by stopping heat rejection to the main heat dump and scramming the reactor. The primary pumps will keep operating for 600 seconds before being tripped to initiate the long heatup transient. Reactor decay power will be removed through the RVACS and peak clad and coolant temperature are expected to reach in about twenty hours.

(D) Single Rod Withdrawal Without Scram

This is a double failure event with the single rod withdrawal as the initiating event accompanied by a failed reactor scram. As the primary and intermediate sodium temperatures rise, heat rejection rate in the steam system will exceed 100%. Then, it is necessary to trip the intermediate pump and the recirc pump to avoid venting steam and potential dryout of the steam generator. System heat rejection rate will reduce to what can be sustained by natural circulation in the steam generator system and intermediate sodium system.

(E) Loss of IHTS Without Scram

This test is similar to the loss of IHTS with full primary flow event except that the reactor failed to scram. The transient is initiated by the loss of heat rejection capability through the intermediate sodium loop while the reactor and the primary pump are operating at full power conditions. As the core inlet flow heats up, thereby raising the overall core temperatures, reactor reactivity becomes negative resulting in a rapid reduction of reactor power.

(F) Loss of Flow Without Scram

The loss of flow without scram test is conducted to verify the performance characteristics of the reactor system under this scenario. It also provides valuable information for preparing and conducting the more severe scenarios as defined in the third group of tests. Loss of flow without scram test is initiated by a primary pump trip while the reactor continues to operate at full power. The primary pump trip (and coastdown) will also cause the intermediate sodium pump and the recirc pump to coastdown. The rapid primary flow decay will result in a rapid core coolant temperature increase which in turn creates negative reactivity feedbacks to immediately initiate the decrease of reactor power. The reactor heat will be removed through the main heat transport loop and, as the reactor sodium temperature rises, through the RVACS.

(G) Single Rod Withdrawal and Loss of Flow Without Scram

This transient event and the next two are triple failure events and their probabilities are extremely low. The scenario for this event is similar to the loss of flow without scram except that the transient is initiated by a single rod withdrawal rather than at normal operating conditions. To avoid potential damage to the test facility, the reactor power for the triple failure tests will be limited to 60% of rated conditions.

(H) Loss of Flow and IHTS Without Scram

This test is initiated by the loss of the heat rejection loop while the primary system is operating at 60% rated conditions. Then the primary pumps are tripped. Negative reactivity effects will result from the heatup of the core inlet flow, which will decrease the core power. Reactor heat rejection will be primarily through the RVACS.

(I) Single Rod Withdrawal and Loss of Power Without Scram

This test is conducted to envelope the SSE core compaction accompanied by loss of off-site power event. Without electrical power, the primary and intermediate pumps and the water pumps (recirc and feedwater) will coast down. Simultaneously, a control rod is withdrawn to initiate the test. Similar to the loss of flow and IHTS test, negative reactivity effects will result from the heat up of the reactor inlet flow.

(J) Degraded RVACS With Scram and Loss of IHTS

The RVACS test is conducted to verify the performance of the heat rejection system under partial blockage conditions. Since RVACS is the ultimate heat sink for PRISM, it is necessary to assume the loss of the main heat sink to validate the test.

Three tests will be conducted for the RVACS study at 60% of core power. The transients will be initiated at the partial blockage of the air inlet of 0%, 30% and 60% (100%, 70% and 40% of free flow area). Then, the reactor is scrammed followed by the primary and intermediate pump trips. As the main heat transport loop is lost, decay power will be removed only through the RVACS.

14.2.2.4 Surveillance Activities

Surveillance activities are included to develop reliability information, demonstrate maintenance capability as it influences safety, and meet in-service inspection requirements. The surveillance activities will be conducted in parallel with the testing, as appropriate.

<u>Operability/Reliability Monitoring</u>

The objective of this activity is to monitor the test article over a continually changing set of operating conditions for a significant period so as to search out any areas of unreliability or noncompliance with

expected response and to judge whether the number of operators is sufficient. During this phase, delinquent testing activities, or test reruns, if necessary, may be completed without compromising this objective.

On-Line Maintenance Demonstration

The objective of this activity is to demonstrate that all maintenance planned for on-line performance can, in fact, be accomplished within the existing environment of radiation, temperature and space. During this activity, concurrently with the operability/reliability monitoring, at least one demonstration of each scheduled maintenance procedure would be carried out with the facility on-line.

On-Line In-Service Inspection

The objective of this activity is to demonstrate that all in-service inspections that are planned to be carried out on-line can in fact be accomplished within the existing environment of radiation, temperature and space. During this phase, concurrently with the operability testing, at least one demonstration of each scheduled in-service inspection procedure would be carried out with the facility on-line.

14.2.3 Test Data

The information obtained during the three testing phases described in Section 14.2.1 will be utilized in the test and evaluation as specified in Section 14.2.4. The data will be recorded in digital form using the data acquisition system described in Section 14.4.6.

14.2.3.1 Instrumentation and Data Requirement Guidelines

In the determination of instrumentation and data requirements for the safety test, the effort has been directed toward instrumentation that is unique to the PRISM test itself and would not necessarily be an integral part of the PRISM standard design (see Section 14.3.5). In addition, the effort has focused on the instrumentation requirements of the reactor

module where: 1) most of the data base beneficial to NRC licensing of future PRISM power plants will originate; 2) the installation and replacement maintenance of instrumentation is most difficult; and 3) the problems of survival of factory-installed instrumentation, during shipment to and installation at the reactor site, are most acute.

14.2.3.2 Instrumentation Descriptions

The specific instrumentation identified by applying the above guidelines are described in this section.

Instrumented Core Assemblies

Special instrumented fuel assemblies will be used to obtain detailed in-core data. These instrumented assemblies will be similar to the two instrumented assemblies used in the recent EBR-II safety tests-- an instrumented driver fuel assembly (XX09) and an instrumented blanket assembly (XX10).

The instrumentation in each of the EBR-II special assemblies consists of: 1) two (for redundancy) permanent magnet flowmeters located in the lower-axial-shield region*; 2) a thermocouple associated with each flowmeter; 3) four mixed-mean outlet thermocouples; and 4) many (XX09 has 22) thermocouples built into the fuel element spacer wires with their junctions located at core midplane, top of core, and above core positions. These are all fast response Type K chromel/alumel thermocouples. Previous instrumented core assemblies in EBR-II have measured fuel and duct-wall temperatures.

Since the flow split between hydraulically dissimilar core assemblies can be flow-dependent (i.e., different at natural convection conditions than at full-flow forced convection conditions), at least one instrumented

*These are calibrated for the range of full-flow positive to about 10% flow negative. The flowmeter leads are brought up through hollow tubes at the edge of the pin bundle.

assembly, accurate at low flow conditions, for each type of heat generating core assembly is anticipated for the safety test. The development aspects of the instrumented core assemblies for the safety test are addressed in Appendix 14B.

RVACS Instrumentation

For the PRISM safety test, a range of instruments will be used to obtain the following data.

(A) Environmental Data
Ambient temperature, pressure, dew point, wind direction and velocity.

(B) Flow
Volumetric flow through all RVACS intake ducts.

(C) Temperatures
Mixed bulk exit temperatures in all RVACS exhaust ducts; large number of thermocouples (response time relatively unimportant) distributed over the reactor vessel, containment vessel, and collector shell.

(D) Local Velocities
The measurement of local air velocities at several locations throughout the system where large deviation from the mean flow rate can be expected is under consideration. This will augment information on velocity distribution that can be obtained by calculation, inferred from the vessel temperature measurements, and estimated from the RVACS development program.

(E) Sodium Level
Given that the RVACS does not function with full efficiency until the reactor vessel liner overflow condition is realized, sodium level measurement with the standard inductive-coil probe is regarded here as

part of the RVACS instrumentation system though it is necessary for other reasons, too. The overflow condition should also be evident from a sharp increase in reactor vessel temperature.

Surface emissivities, which are material properties vital to the performance of the RVACS, are not measured directly but are obtainable from the instrumentation listed above (i.e., vessel temperatures and the energy transferred based on flowing-air heat balance).

Other Instrumentation

The following additional instrumentation is important to safety test operational purposes including compliance with operational technical specifications, and for characterization of the facility's response to imposed test conditions:

(A) Flow Monitoring

Flow will be monitored in the instrumented core assemblies and in each of the pipes from the EM pumps to the reactor inlet plenum. The EM pump sodium flow monitoring, capable of measuring low flow conditions, is expected to consist of a multipath ultrasonic flowmeter module, just upstream of each pump-pipe junction, which can be serviced by removal of the pump. Each module consists of multiple pairs (2 or 3) of transducers, each pair capable of being calibrated as an independent flowmeter. Also, a single-path ultra- sonic flowmeter maybe placed on a long straight section of each inlet pipe downstream of the pump-pipe junction.

(B) Thermocouples

Thermocouples will be the most prevalent form of instrumentation in the PRISM safety test. In addition to the thermocouples already discussed as part of the RVACS instrumentation and the instrumented core assemblies, generous thermocouple coverage of the following areas will be provided:

1. Hot pool including upper internal structure
2. Cold pool including inlet plenum
3. Fixed shielding
4. Grid plate
5. Core former ring
6. EM pump inlets, outlets and stators
7. Intermediate heat exchangers
8. Reactor closure
9. Reactor closure/vessel junction area
10. Reactor vessel and containment vessel walls
11. Control rod driveline

(C) Radiation Monitoring

Instrumentation to detect and measure levels of radiation within the facility, concentrations of airborne radioactivity within the facility, and concentrations of radioactivity in gaseous and liquid effluents released and/or shipped from the safety test facility will be required. This instrumentation will be similar to that of a PRISM power plant.

(D) Seismic Monitoring Instrumentation

Instrumentation for measuring seismic effects falls into two broad categories: 1) instrumentation placed in test holes around the entire test facility site to measure micro-earthquake activity and to record ground motions during the in situ seismic tests (and to measure motions due to any actual earthquake occurring during the life of the facility); and 2) instrumentation positioned at various locations within the safety test facility structures and equipment, both in the test article, and in a few select places for the facility. The latter instrumentation would be the principal means of measuring accelerations and displacements at various locations in the facility to compare with analytically predicted values. Such instrumentation would be invaluable--in conjunction with site-wide instrumentation--in determining response of the facility to an actual earthquake. Instrumentation generally consists of accelerometers and devices to measure deflections at selected locations of the structures and components.

Seismic instrumentation will be a good more plentiful within the test article than in the module of the standard PRISM design.

(E) Strain

Although strain measurements are generally not included in test reactors, their usefulness will be evaluated for monitoring structural component behavior under transient conditions or for core restraint system performance.

14.2.3.3 Data Requirements

The specific details of the number of measurements, type, and accuracy of the required test data will be developed as the test and evaluation plan mature, detailed transient analyses become available, and NRC interactions on the safety test proceed.

14.2.4 Evaluation Plan

The evaluation plan involves the development of analysis methods of the key safety tests as described in Section 14.2.2. Both PRISM plant and test facility analyses are required to assure that the tests are prototypical. The primary tasks in the evaluation plan include: 1) final safety test selection and definitions for PRISM certification, 2) test specification for the test facility, 3) pre-test analysis, 4) test performance and data collection, 5) post-test analysis and methods updates, and 6) documentation of test data as it supports PRISM certification.

14.2.4.1 Evaluation Plan Approach

The evaluation plan approach requires detailed design data for the reactor and for the test facility to perform the primary tasks. The detailed PRISM and test facility design data provides the basis for performing system and subsystem analyses.

The PRISM safety test selection and definition task requires failure modes and effects analysis (FMEA) which provide the basis for developing fault trees for establishing event probabilities and for defining the overall event trees and system reliability. In addition to the qualitative effects analysis of the FMEA, detailed transient analysis at selected levels of detail will be performed to establish quantitative effects for selected design and beyond design basis transients. A probabilistic risk assessment will be performed on the PRISM plant to quantify the major contributors to risk and to assure that the safety test phase addresses the DBE's and BDBE's that can affect public safety relative to reactor transient performance. Based upon the FMEA, the transient analyses and the PRA task results, a final selection of events will be made.

Given the PRISM transient safety test definitions and the test facility design which will be developed with these safety test definitions in mind, test specifications may be written for the facility. The test facility is expected to be prototypical in the safety related systems such as the reactor system, the reactivity control and shutdown system, and the shutdown heat removal system. Analysis of the test facility performance is expected to use identical tools/models as used for the PRISM concepts with the exception of the balance of plant model which will have to be modified to provide for simulation of the normal heat rejection system. In the reactor system and core system evaluations the methods currently applied to the PRISM plant can probably be used without modification. Thus, the generic transient performance methodology currently being used for the PRISM plant should also be applicable to the test facility with only minor modification of the plant level analysis code. If the air dump heat exchanger option is selected the FFTF models developed for the IANUS code (Reference 14.2-4) should be readily adaptable.

There will be an evaluation plan for each testing phase of this program. A step-by-step approach of increasing severity to the final test phases will be used. The PRISM transient evaluation methodology described in Section 14.2.4.3 addresses all phases of these tests because elements of the evaluation of the safety tests phase are identical to elements of the two prior phases. There will be a verification and calibration of the

analytical tools between each phase of the program. For each testing phase there will be a pre-test and a post-test analysis performed. During the post-test analysis any code or methodology updates required to obtain adequate agreement with the test data will be performed and documented. Each phase of the evaluation program will be documented to show the relevance of the test data collected to certification of PRISM standard design.

14.2.4.2 Safety Test Selection and Specification Plan

The process for selection and definition of the safety tests to be performed is iterative in nature due to the preliminary design stage of the PRISM project. The preliminary matrix of safety tests events is given in Section 14.2.2.3. These events include both duty cycle or DBE's which involve a reactor scram and BDBE's which assume no scram. Because there are many potential initiating events, an enveloping approach is used in selecting the final events to be tested.

A set of test specifications will be developed for application to the test facility. These test specifications will outline the detailed pre- and post-test evaluations required. The PRISM transient analysis methods will be used for evaluating the test facility with only those modifications required to adequately model the test facility. The PRISM transient analysis methods as described in the following section will be used for the pre- and post-test evaluations.

14.2.4.3 PRISM Transient Evaluation Methods

The methods that will be used in the final transient design analysis of the safety tests is summarized in the data flow diagram shown in Figure 14.2-1. This data flow identifies the currently available methods in the plant level dynamics, reactor systems, and core systems analysis areas. The plant level analysis code provides the starting point for the analysis because all systems are modeled. This plant level analysis provides flow histories by core region and the inlet temperature history to both the reactor system code (COMMIX) and the core systems code (CORTAC). The core systems and plant level codes also require scram dynamics data for design

basis transients. The CORTAC code also requires pre-bow duct shapes as initial conditions for both design basis and beyond design basis events. The core system code provides the power history to reactor system code. Bowing reactivity data is also returned from this point to the plant level code. The reactor system code also provides feedback on 3-D upper and lower plenum mixing rates and 3-D heat loss effects.

In some local reactivity insertion events, such as a control rod withdrawal event, the power shape must be investigated to assure that the point kinetics assumptions are adequate. The power shape factors are incorporated into the peak fuel pin analysis using the life code which performs a coupled transient thermal and mechanical analysis of the fuel pin to assess the integrity of the first fission product barrier, the fuel pin cladding.

The methodology described above is still being developed and verified. It can be expected that significant changes may occur prior to PRISM deployment as both the PRISM design and test facility design evolve and as methods verification with the FFTF inherent safety testing (ISI) program and the EBR-II shutdown heat removal test series proceed.

REFERENCES - Section 14.2

14.2-1 Clinch River Breeder Reactor Plant Preliminary Safety Analysis Report. Project Management Corporation. Volume 9, Chapter 15.

14.2-2 Standard Review Plan for the Review of Safety Analysis Reports for Nuclear Power Plants - LWR Edition. U.S. Nuclear Regulatory Commission Document NUREG-0800, July 1981.

14.2-3 Standard Formal and Content of Safety Analysis Reports for Nuclear Power Plants - LMFBR Edition. U.S. Atomic Energy Commission, February 1974, (Table 15-1).

14.2-4 W. T. Nutt, "FFTF Natural Circulation Testing IANUS Verification," (HEDL-TC-2107), January 1982.

TABLE 14.2-1

PRISM SAFETY TESTING
SUMMARY DESCRIPTION

CONVENTIONAL TESTING PHASE

- o Preoperational Testing
- o Baseline In-service Inspections
- o Hot Functional Testing
- o Fuel Loading
- o Startup Testing
  - Precriticality Testing
  - Low Power Ascension Testing
  - Duty Cycle Testing

SAFETY BENCHMARK TESTING PHASE

- o Inherent Response Characterization Testing
  - Reactivity Feedback
  - Structural Response
- o Inherent Response Verification Testing
  - RVACS Heat Transfer
  - Seismic Response

TABLE 14.2-1

PRISM SAFETY TESTING
SUMMARY DESCRIPTION
(Continued)

SAFETY TESTS PHASE

- o Design Basis Events*
  - Normal Shutdown with Flow Coastdown
  - Reactivity Addition Event with Flow Coastdown
  - Loss of IHTS Event with Full Primary Flow
- o Beyond Design Basis Events**
  - Reactivity Addition Event with Full Flow
  - Loss of IHTS Event with Full Primary Flow
  - Flow Coastdown
  - Reactivity Addition Event with Flow Coastdown
  - Loss of IHTS Event with Primary Flow Coastdown
  - Reactivity Addition Event with Loss of Power
  - Degraded RVACS Performance with Loss of IHTS and Primary Flow Coastdown

SURVEILLANCE ACTIVITIES

- o Operability/Reliability Monitoring
- o On-Line Maintenance Demonstration
- o On-Line In-service Inspection

---

* All tests with scram

** All tests without scram except for degraded RVACS performance test

TABLE 14.2-2

EVENT CATEGORIES AND DEFINITIONS

EVENT CATEGORY	DEFINITION
DESIGN BASIS EVENTS	
o Normal Operation	Any condition of system startup, design range operations, hot standby or shutdown
o Anticipated Event	An off-normal condition which individually may be expected to occur once or more during the plant's lifetime
o Unlikely Event	An off-normal condition which individually is not expected to occur during the plant's lifetime; however, when integrated over all plant components, events in this category may be expected to occur a number of times
o Extremely Unlikely Event	An off-normal condition of such extremely low probability that no events in this category are expected to occur during the plant's lifetime, but which nevertheless represents extreme or limiting cases of failure which are identified as design bases
BEYOND DESIGN BASIS EVENTS	
o Extreme Event	An off-normal condition of such extremely low probability that no events in this category are credible during the plant's lifetime, but which nevertheless represents extreme consequences

TABLE 14.2-3

SAFETY TEST EVENTS

Classification	Test Event	Enveloped Event	Frequency[a]
Design Basis Events (DBE)	Normal scram transient	Normal shutdown, turbine-generator trip	97.6%
	Single rod withdrawal with scram	SSE core compaction	0.4%
	Loss of IHTS with scram	Loss of main heat sink, loss of IHTS, loss of power	2.0%
Beyond Design Basis Events (BDBE)	Single rod withdrawal without scram	SSE without scram	Extremely low
	Loss of IHTS without scram	Loss of main heat sink without scram	Extremely low
	Loss of flow without scram		Extremely low
	Single rod withdrawal and loss of flow without scram	SSE and loss of flow without scram	Extremely low
	Loss of flow and IHTS without scram	Loss of off-site power without scram	Extremely low
	Single rod withdrawal and loss of power without scram	SSE with loss of power without scram	Extremely low
	Degraded RVACS with loss of IHTS with scram	Degraded RVACS with loss of power	Extremely low

(a) Based on SHRS Safety Study (Reference 14.2-7)

TABLE 14.2-4 SAFETY TESTING PHASE CONDITIONS

NO./COND.*		TEST DESCRIPTION	REACTIVITY (K=)	REACTOR (% POWER)	PRI.PUMP** (% FLOW)	INT.PUMP (% FLOW)	SG/COND. (% H.R.)	RVACS (% FLOW AREA)	TEST TIME
1 A.	I	NORMAL SCRAM TRANSIENT	1	50	100	100	50	100	
	T		SCRAM	DECAY HEAT	TRIP	TRIP	R.P.TRIP	100	3 HOURS
B.	I		1	100	100	100	100	100	
	T		SCRAM	DECAY HEAT	TRIP	TRIP	R.P.TRIP	100	3 HOURS
2 A.	I	SINGLE ROD WITHDRAWAL	1	30	100	100	30	100	
	T		SCRAM	DECAY HEAT	TRIP	TRIP	R.P. TRIP	100	3 HOURS
B.	I		1	60	100	100	60	100	
	T		SCRAM	DECAY HEAT	TRIP	TRIP	R.P. TRIP	100	3 HOURS
C.	I		1	100	100	100	100	100	
	T		SCRAM	DECAY HEAT	TRIP	TRIP	R.P. TRIP	100	3 HOURS
3 A.	I	LOSS OF IHTS WITH FULL PRIMARY FLOW	1	30	100	100	30	100	
	T		SCRAM	DECAY HEAT	100	LOSS ACS	LOSS HEAT SINK	100	24 HOURS
B.	I		1	60	100	100	60	100	
	T		SCRAM	DECAY HEAT	100	LOSS ACS	LOSS HEAT SINK	100	24 HOURS
C.	I		1	100	100	100	100	100	
	T		SCRAM	DECAY HEAT	100	LOSS ACS	LOSS HEAT SINK	100	32 HOURS
4 A.	I	SINGLE ROD WITHDRAWAL (TOP) WITHOUT SCRAM	1	30	100	100	30	100	
	T		NO SCRAM	FISSION+DECAY	100	100	>30	100	10 MIN.
B.	I		1	60	100	100	60	100	
	T		NO SCRAM	FISSION+DECAY	100	100	>60	100	10 MIN.
C.	I		1	100	100	100	100	100	
			NO SCRAM	FISSION+DECAY	100	100	>100	100	10 MIN.
5 A.	I	LOSS OF IHTS WITHOUT SCRAM	1	30	100	100	100	100	
	T		NO SCRAM	FISSION+DECAY	100	LOSS ACS	LOSS HEAT SINK	100	10 MIN.
B.	I		1	60	100	100	100	100	
	T		NO SCRAM	FISSION+DECAY	100	LOSS ACS	LOSS HEAT SINK	100	10 MIN.
C.	I		1	100	100	100	100	100	
			NO SCRAM	FISSION+DECAY	100	LOSS ACS	LOSS HEAT SINK	100	10 MIN.

* I=INITIAL CONDITIONS T=TRANSIENT CONDITIONS

** PUMPS ARE SUPPORTED BY E STARTER-GOWENERATOR FOR COASTDOWN

R.P. = Recirc. Pump

TABLE 14.2-4 SAFETY TESTING PHASE CONDITIONS (Continued)

NO./COND.	*	TEST DESCRIPTION	REACTIVITY (K=)	REACTOR (% POWER)	PRI.PUMP** (% FLOW)	INT.PUMP (% FLOW)	SG/COND. (% H.R.)	RVACS (% FLOW AREA)	TEST TIME
6 A.	I	LOSS OF FLOW (LOF)	1	30	100	100	30	100	
	T	WITHOUT SCRAM	NO SCRAM	FISSION+DECAY	TRIP	TRIP	R.P.TRIP	100	10 MIN.
B.	I		1	60	100	100	60	100	
	T		NO SCRAM	FISSION+DECAY	TRIP	TRIP	R.P.TRIP	100	10 MIN.
C.	I		1	100	100	100	100	100	
			NO SCRAM	FISSION+DECAY	TRIP	TRIP	R.P.TRIP	100	10 MIN.
7 A.	I	SINGLE ROD WITHDRAWAL	1	30	100	100	30	100	
	T	AND LOSS OF FLOW WITHOUT SCRAM	NO SCRAM	FISSION+DECAY	TRIP	TRIP	R.P.TRIP	100	10 MIN.
B	I		1	60	100	100	60	100	
	T		NO SCRAM	FISSION+DECAY	TRIP	TRIP	R.P.TRIP	100	10 MIN.
8 A.	I	LOSS OF FLOW AND IHTS	1	30	100	100	30	100	
	T	WITHOUT SCRAM	NO SCRAM	FISSION+DECAY	TRIP	LOSS ACS	LOSS HEAT SINK	100	10 MIN.
B.	I		1	60	100	100	60	100	
	T		NO SCRAM	FISSION+DECAY	TRIP	LOSS ACS	LOSS HEAT SINK	100	10 MIN.
9 A.	I	SINGLE ROD WITHDRAWAL	1	30	100	100	30	100	
	T	AND LOSS OF POWER WITHOUT SCRAM	NO SCRAM	FISSION+DECAY	TRIP	LOSS ACS	LOSS HEAT SINK	100	10 MIN.
B.	I		1	60	100	100	60	100	
	T		NO SCRAM	FISSION+DECAY	TRIP	LOSS ACS	LOSS HEAT SINK	100	10 MIN.
10 A.	I	DEGRADED RVACS WITH	1	60	100	100	60	100	
	T	LOSS OF IHTS	SCRAM	DECAY HEAT	TRIP	LOSS ACS	LOSS HEAT SINK	100	24 HOURS
B.	I		1	60	100	100	60	100	
	T		SCRAM	DECAY HEAT	TRIP	LOSS ACS	LOSS HEAT	70	36 HOURS
C.	I		1	60	100	100	60	100	
	T		SCRAM	DECAY HEAT	TRIP	LOSS ACS	LOSS HEAT SINK	40	48 HOURS

* I=INITIAL CONDITIONS T=TRANSIENT CONDITIONS

** PUMPS ARE SUPPORTED BY E STARTER-GOWENERATOR FOR COASTDOWN

R.P. = Recirc. Pump

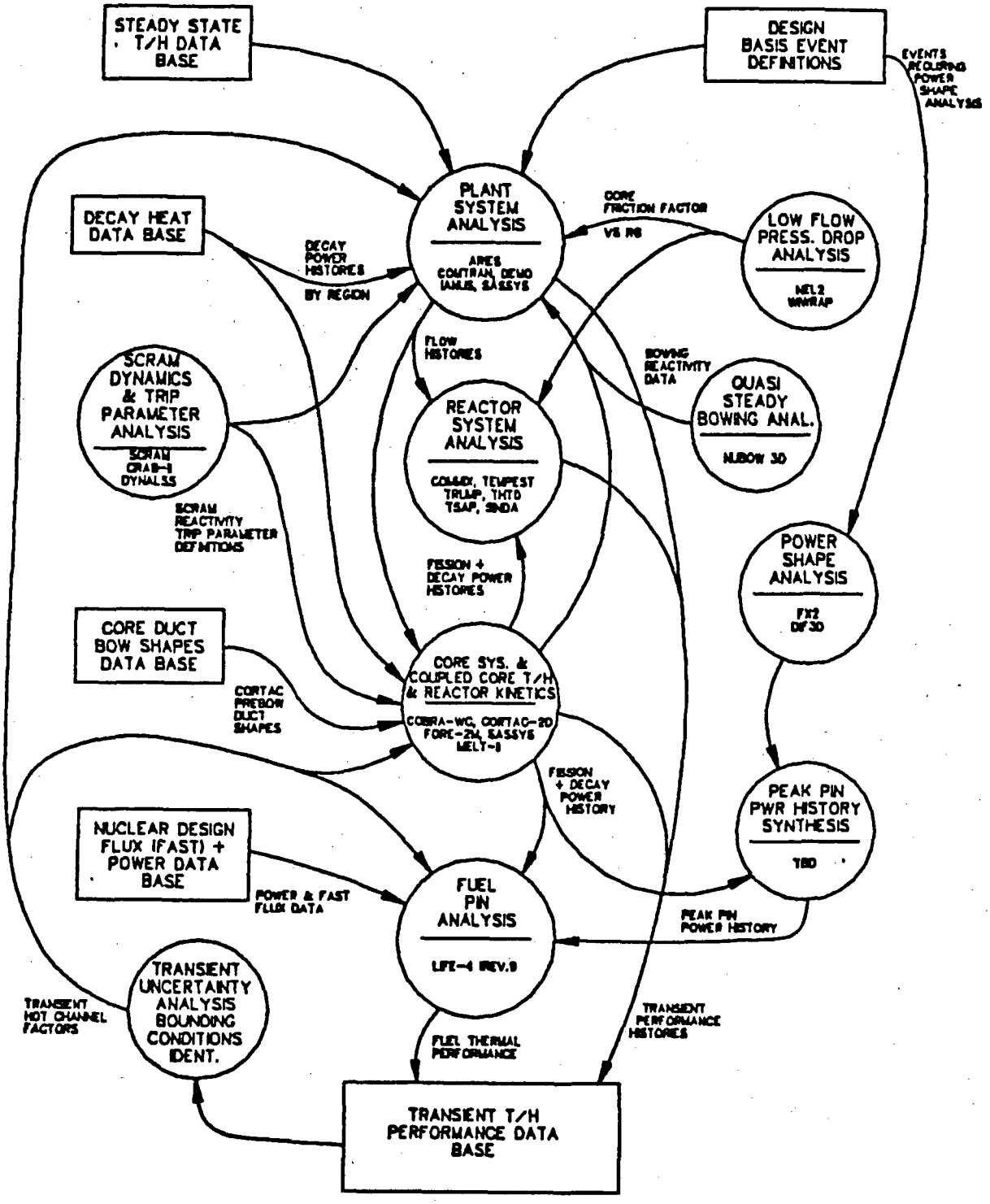

Figure 14.2–1 TRANSIENT THERMAL/HYDRAULIC ANALYSIS DATA FLOW

14.3

14.3 Test Article

The test article consists of a full-scale prototypical standard PRISM the reactor module and the associated support and isolation structures, the RVACS structure, and the module instrumentation. Although these components are adequately described in other portions of this PSID, they are consolidated here to provide a complete description of the safety test. If discrepancies exist between design information provided here and other chapters of this PSID, the design chapter description takes precedence.

14.3.1 Reactor Module

The reactor module, shown in Figure 14.3-1, consists of the reactor vessel, reactor vessel closure with rotatable plug, intermediate heat exchanger (IHX), electromagnetic (EM) pumps, control rod drives (CRD), upper internal structure (UIS), in-vessel transfer machine (IVTM), fuel storage racks, horizontal baffles, core inlet piping, core barrel and shielding, and the core support which is integral with the vessel.

The reactor module is factory built and shipped to the field ready for installation in a below grade silo. The reactor module is supported from the top closure which is anchored to the concrete silo structure above the RVACS ducts. The reactor module and its associated support structures and RVACS ducting are supported on seismic isolators.

The reactor vessel and containment vessel are attached to the reactor closure and are the major components of the reactor enclosure which provides the container and support structure for the reactor core, primary sodium, and structures within. The reactor vessel performs its support and container functions during all temperature, pressure, and load variations which occur during the operating lifetime. The reactor and containment vessels are designed and constructed to the requirements of the ASME B&PV Code, Section III. The reactor vessel has no penetration and no attachments other than those for connecting the core support structure to the hemiellipsoidal bottom head.

The reactor vessel and containment vessel are suspended from the closure. The closure support is a segmented skirt which accommodates thermal movements and earthquake loadings in addition to the normal dead loads. The support skirt interfaces with the building structure through a bolting and keying system.

The dimensions of the reactor and containment vessel are sized not only to hold the core and perform as a reactor system but also to have sufficient surface area to transfer decay heat by direct convection and by radiation to the collector cylinder and natural circulation of air. The reactor and containment vessel are about 20 feet in diameter and about 60 feet long. The reactor vessel is constructed of Type 316 stainless steel, and the containment vessel is of chrome-moly steel.

14.3.1.1 Pumps

There are four EM pumps in each reactor assembly, each rated at 10,500 gpm at a discharge pressure of 120 psi. The compact size, low net positive suction head (NPSH) requirements, low maintenance, absence of seals, moving parts, and dynamic auxiliary systems makes the EM pump ideal for this application. The lack of any substantial superstructure on the reactor closure where space is at premium is also very advantageous. The pumps have no moving parts and are cooled by the sodium in which they are submerged. This requires an electrical insulation of higher temperature rating than has been previously used for EM pumps. Early insulation development life test results (at ANL) encourage the expectation that the requirements will be met.

14.3.1.2 Intermediate Heat Exchanger

There are two intermediate heat exchangers (IHX) in each reactor module. Each IHX is rated at 215 MWt to accommodate the core heat load of 425 MWt for the reactor and 4.6 MWt from the four EM pumps. The two IHX's are located above the reactor core in the annular region between a reactor shield barrel and the reactor vessel wall. The IHX cross section is kidney shaped to most effectively use the reactor space available to

minimize the overall diameter of the reactor vessel. All components of the IHX are constructed of austenitic stainless steel and the IHX is a safety-related component.

The IHX design consists of an upper and lower tubesheets separated by straight tubes, with a central downcomer and riser for incoming and outgoing intermediate sodium, respectively. Primary sodium from the hot sodium pool enters the IHX at an elevation below the upper tubesheet. The primary sodium flows downward between the tubes and shell to above the lower tubesheet, and exits into the reactor cold plenum. This lower plenum has two outlet nozzles where the primary sodium exits into the cool sodium pool.

The cold leg intermediate sodium flows down the central downcomer, and splits into two streams below the lower tubesheet. Each stream then flows up through the straight tubes. The intermediate sodium exits the bundle just above the upper tubesheet into the annular space between the concentric external riser cylinder and internal downcomer cylinder. This sodium leaves the IHX through the intermediate outlet nozzle for use in the intermediate heat transport loop.

14.3.1.3 Control Rod Drives

There are six control rod drive (CRD) assemblies to regulate power, compensate for burnup, scram the reactor, and hold it subcritical during refueling. The CRD's consist of a drive mechanism, driveline, absorber bundle, and the absorber channel. The drive is mounted on top of the reactor vessel closure and controls axial motion of the absorber bundle in the core. The six control assemblies are scram actuated by a magnetic coil which, when de-energized, releases a latch mechanism allowing the absorber assembly to fall by gravity into the core. A drive-in mechanism is also incorporated into each control drive assembly to ensure rod insertion following scram release. The driveline is disconnected and raised above the tops of the core channels for plug rotation during refueling.

14.3.1.4 In-Vessel Transfer Machine

The in-vessel transfer machine (IVTM) is mounted on the reactor rotatable plug which is centered within the reactor vessel. The IVTM consists of two subassemblies, the above-head drive assembly and the in-vessel pantograph machine which can extend to reach all removable core locations when used in conjunction with the rotating plug.

The IVTM is used to move fuel and other core components between the core, storage racks, and the transfer station where they are removed from the reactor by a shielded transfer cask. The in-vessel portion of the IVTM remains in the reactor during operation, stored within the confines of the upper internal structure, which also provides support for the CRD drive-lines. The above head portion is moved from module to module.

The IVTM removes fuel from the core and places it in storage positions located above and outboard of the core. Twenty-two core assemblies can be stored between refueling cycles allowing a year decay to enable handling of spent fuel in an inert atmosphere.

14.3.1.5 Reactor Core

The PRISM reactor core is designed to provide features which enhance its inherent safety characteristics. One of these characteristics is the relatively low reactivity swing of the core from the cold, zero-power critical state to hot, full-power condition. The low reactivity swing allows the insertion of a single control assembly to bring the PRISM core from hot, full-power down to the cold, zero-power state. The active shutdown system is backed up by inherent core feedback mechanisms which assure that postulated beyond design basis accident initiators will be terminated in a safe non-damaging manner. Thus, the inherent feedback mechanisms result in significant added margin beyond the design basis in its defense-in-depth approach to safety. These inherent safety mechanisms will be demonstrated during the full-scale safety tests.

Figure 14.3-2 provides a layout of the PRISM metal core. The PRISM core has a heterogeneous configuration with an active core height of 46 inches. The metal core operates at low temperatures due to its high thermal conductivity with peak specific power of greater than 14 kW/ft and due to the core outlet temperature of 875°F used in conjunction with a simple saturated steam cycle. The burnup reactivity swing is also relatively low such that the maximum reactivity insertion associated with a single rod withdrawal is about 0.22$. Inherent core reactivity feedbacks cause shutdown for postulated unprotected (beyond design basis without scram) events such as loss of flow, and loss of normal heat sink, and limits the core power to a safe level for postulated transient overpower due to rod withdrawal.

As a backup to the metal core, PRISM is also designed to be operable with mixed oxide fuel assemblies.

14.3.2 Seismic Isolation Structure

The PRISM reactor module design incorporates a seismic isolation system. Isolators chosen for the PRISM design significantly reduce the lateral seismic loads on the reactor structure and internals. This leads to simpler reactor component designs and increased design margins. By lowering the natural frequency of the isolator below the natural frequency of the reactor structures, amplification of lateral seismic loads is eliminated. This approach assures that costs associated with siting of standardized designs will be reduced significantly.

The isolator arrangement is shown in Figure 14.3-3. Isolators are located below the reactor deck structure and the reactor vessel auxiliary cooling air inlet region. This location provides a stable support base and allows access for inspection of the isolators. Isolators which consist of alternate layers of steel plates and bonded rubber are arranged to provide a redundant support system.

The isolation devices are sized to carry large excess loads, such that significant margins beyond the normal design basis are obtained. The reference isolators are designed to accommodate a seismic loading approximately three times larger than the design basis earthquake. The isolation devices reduce loads to reactor structures and allowing for standardized plant designs that are not site specific.

14.3.3 Head Access Area (HAA) Enclosure

The area above the reactor is enclosed by structures extending from the outer and inner silos. The HAA roof, two HAA walls and the RVACS inlet/outlet stacks are supported from the deck of the inner silo. The roof of the HAA is located at grade level to facilitate refueling. The deck atop the inner silo forms the HAA floor at elevation 100 feet. The HAA roof is supported by the two RVACS stacks extending up from the inner silo deck. The two remaining walls extend from the fixed basemat. Flexible flashing permits relative horizontal movement between the seismically isolated floor, roof, and two walls (part of the inner silo structure), and the two fixed HAA walls.

The HAA roof is equipped with a large hatch to allow reactor access during refueling and large component maintenance and to allow reactor module installation (and removal).

The HAA enclosure is designed to protect the reactor from wind and missile damage.

Located within the HAA are the reactor components that penetrate the reactor closure. Instrument leads and power cables, provided with sufficient flexibility to accommodate the seismic displacement, are routed through wall penetrations to racks and panels in equipment vaults adjacent to HAA.

14.3.4 Shutdown Heat Removal

Normally, reactor decay heat is removed through the intermediate heat transport system, steam generators and bypass line to the condenser. During occasions when the normal condenser heat removal path is unavailable, decay heat is removed by the auxiliary cooling system (ACS) which utilizes natural convection air cooling of the steam generator surfaces. In the extremely unlikely event that neither the normal heat removal path nor the ACS is unavailable, the reactor vessel auxiliary cooling system (RVACS) is provided as a highly reliable heat removal system which maximizes the use of inherent features to provide core cooling.

The RVACS is composed of ducts, plena, and a collection cylinder to circulate air by natural convection for emergency reactor shutdown cooling. Main features of the RVACS are the eight vertical ducts (four inlets and four outlets), two horizontal plena below the HAA floor and the collector cylinder which surrounds the containment vessel. Air is supplied by four rectangular inlet ducts, two on either side of the HAA. Entering the ducts through vertical grills, the air flows down the ducts to a horizontal plenum before entering the vertical annulus between the inner silo and the RVACS collector cylinder. Heated air rising in the annulus between the collector cylinder and the containment vessel is collected in the upper portion of the horizontal plenum before the four vertical exhaust ducts. These hot ducts are located concentrically within the cold inlet ducts.

Concrete and steel are used for the RVACS ducts and plena. The vertical inlet ducts are formed by four concrete walls having a thickness of two feet. The outlet ducts are made of sheet metal. Duct and plena interconnecting walls are made from reinforced concrete. Structural steel is used to separate the inlet and outlet air plena.

The collector cylinder acts as a radiant heat collector and separates the inlet cooling air and the exhaust air of the RVACS inside the inner reactor silo. It functions both as a heat absorber and an air flow passage separator. Cooling air is drawn into the reactor silo by natural circulation, between the outer surface of the collector cylinder and the inner

wall of the silo. Exhaust or heated air travels upwards between the outer surface of the containment vessel and the inner surface of the collector cylinder.

In the event of a total loss of heat removal from the intermediate heat transfer system, RVACS continues to operate automatically and inherently to remove reactor decay heat. RVACS simplicity and inherent operating features make this system an extremely reliable means of assuring effective core cooling under all phases of normal and off normal plant operation. Because of the inherent characteristics of the RVACS, it is expected to have a very high reliability and is, therefore, the only safety-grade shutdown heat removal system for PRISM.

14.3.5 Module Instrumentation

Instrumentation for monitoring the condition of the reactor and surrounding structures are described in this section.

14.3.5.1 Flux Monitoring System

The flux monitoring system measures the fission rate in the core along with criticality and subcriticality. It is located ex-vessel, monitoring the neutron flux leakage underneath the core. During shutdown and refueling operations, a low level monitor is inserted into the core.

Neutron flux monitors cover a range of $1x10^{-6}$ to 100% full operating power for control and accident monitoring. The wide range flux detector shall be used during the rise to power transient and all other operations and conditions for continuous flux monitoring. They shall be located in drywells external to the vessel in the silo and are on the core vertical centerline below the module.

Low-level range flux detectors shall be provided in drywells adjacent to the outer surface of the core barrel at the core midplane elevation to measure core fission power and subcriticality during shutdown and refueling. This flux detector shall be used along with special core assemblies

containing neutron sources during the initial core loading. These detectors shall be withdrawn from the core area during normal power operation and shall be used during refueling and startup operations.

14.3.5.2 Failed Fuel Detection and Recovery

The failed element detection and location (FEDAL) system employs delayed neutron monitoring and fission gas monitoring for breach pin detection with fuel pin gas tagging for assembly location. These systems are briefly described below.

The fission gas monitor provides the first indication of a fuel pin failure. It detects and counts the number of pin breaches by continuously sampling the cover gas with a passive fission gas detector which by diffusion transports the fission gas to the detector as well as provide an appropriate holdup within the detector itself. The fission gas detector is mounted in the reactor head with the cooled gamma detector above the head and a six-foot long shielded diffusion tube below the head in the cover gas space.

The delayed neutron (DN) detector monitors the primary sodium for the presence of sodium-borne fission products that decay by neutron emission. These products (mainly bromine and iodine) are released by the fuel into the sodium. As they decay they release neutrons which are detected by detectors located within each of the main heat exchangers. Three DN detectors and a spare are located in each of the IHX drywells. Signals from the tri-detectors are processed to provide continuous reading of several diagnostic parameters that are used to indicate the amount of fuel exposed to sodium.

Gas tagging is employed to locate the assembly containing the breached pin. Gas tagging is accomplished by adding small amounts of Ar-Ne tag gas to the fuel pins in each assembly. When the pin fails, the tag gas is released. Be determining the unique isotopic composition, the failed assembly can be determined. The tag gas is loaded into each pin by an evacuate-and-backfill technique. Candidate tag isotopes include Ne-20,

Ne-21, Ne-22, Ar-36, Ar-38, and Ar-40. These are blended in various amounts to make up the 150 unique tags used in the PRISM fuel and blanket assembly.

A tag gas recovery and analysis station is to identify the tag gas released. The tag gases are concentrated for analysis by passing the helium cover gas through cryogenic temperature charcoal beds. The tag gases are then further concentrated and passed through a mass spectrometer for identification.

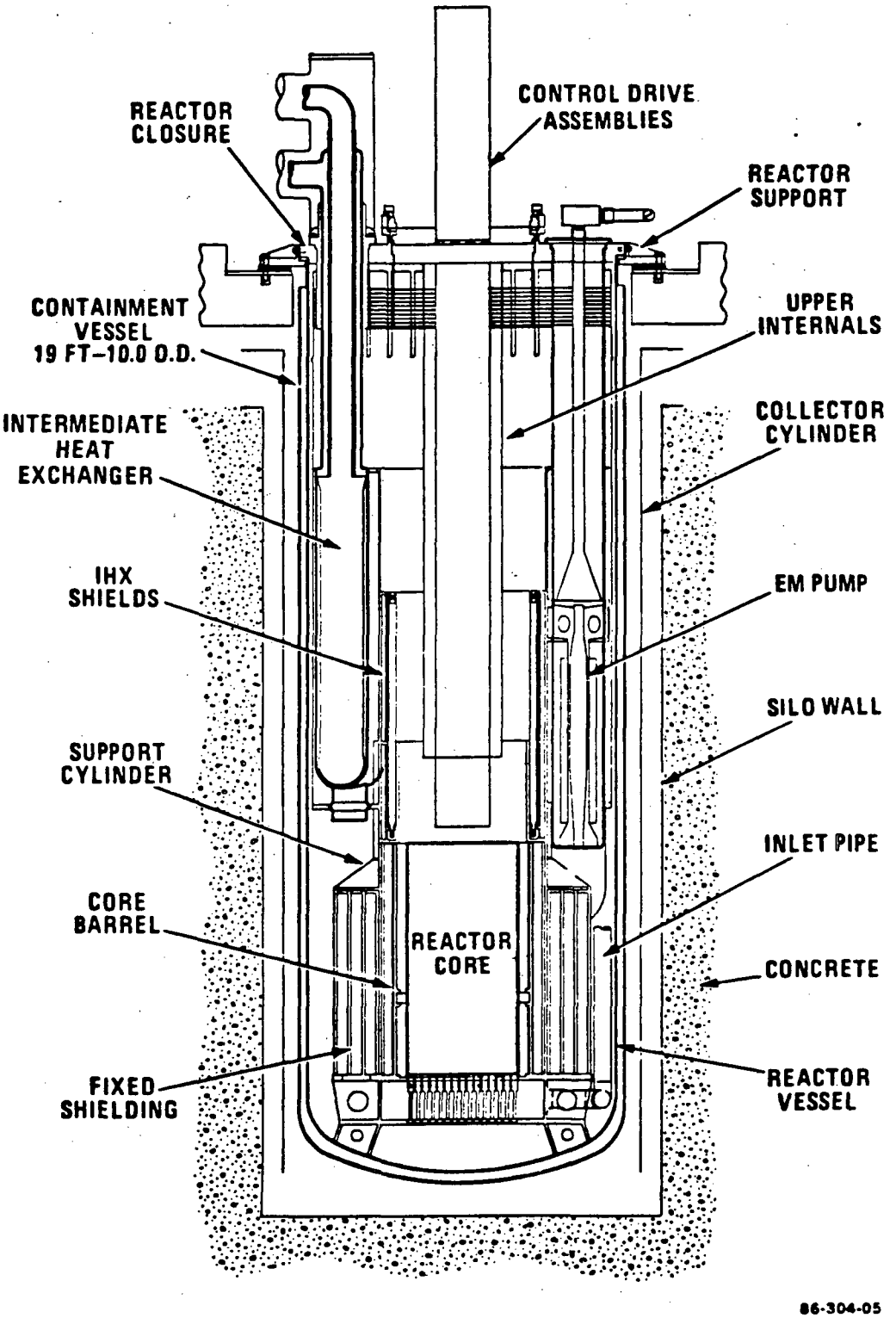

Figure 14.3–1 REACTOR MODULE

FUEL	42
INTERNAL BLANKET	25
RADIAL BLANKET	36
RADIAL SHIELD	60
CONTROL/SHUTDOWN	6
TOTAL	169

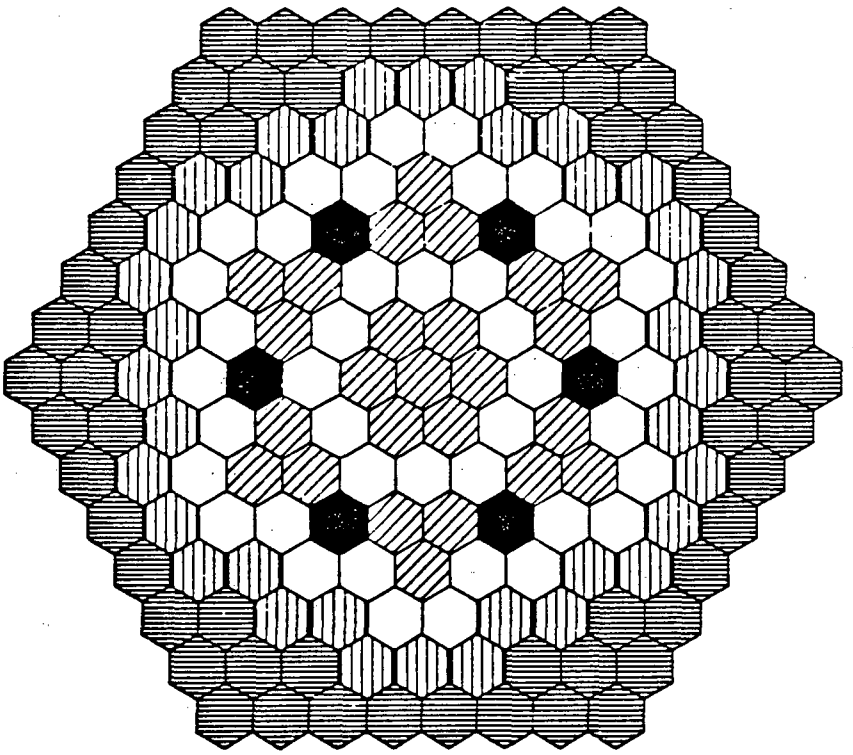

Figure 14.3–2 REFERENCE METAL CORE

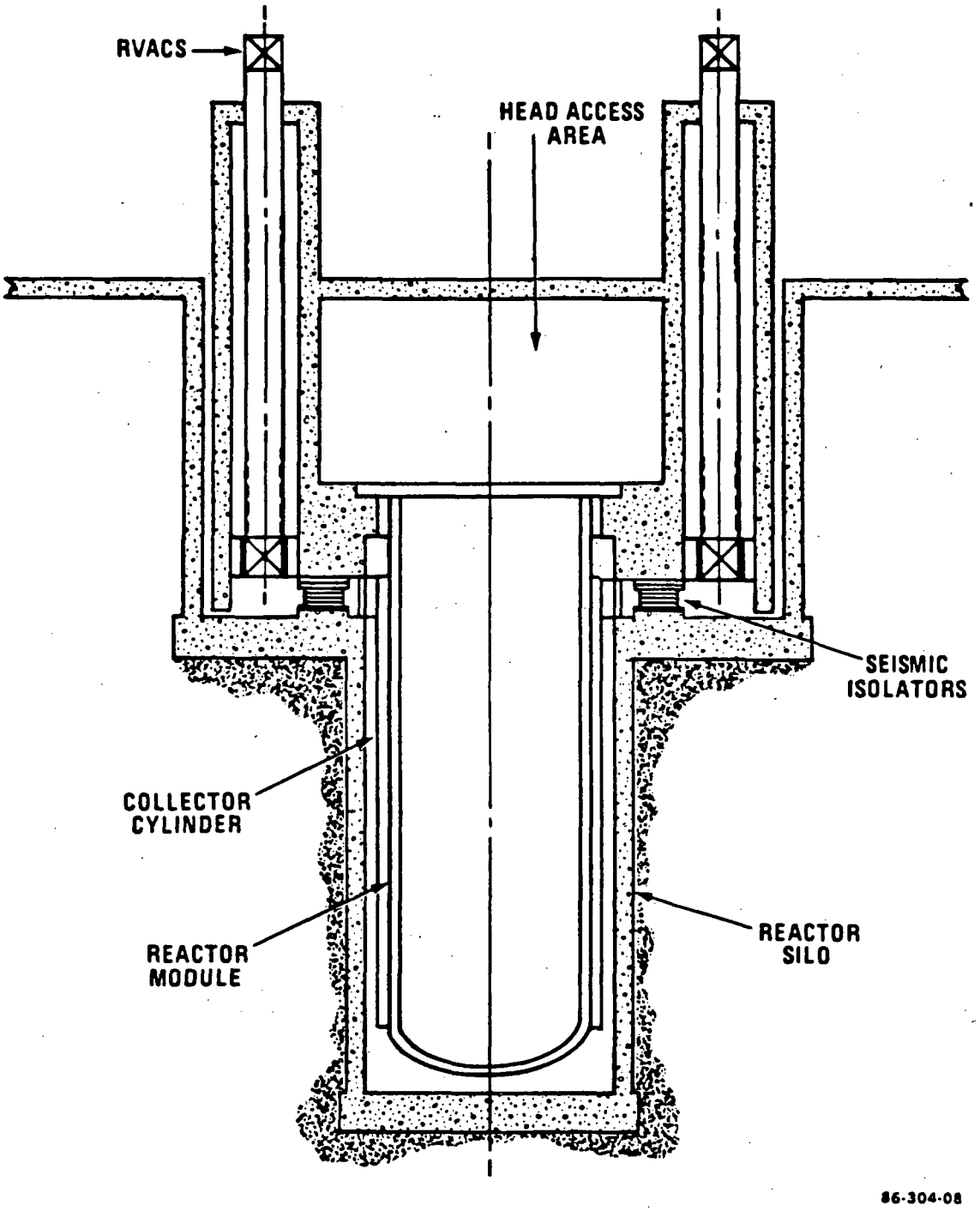

Figure 14.3–3 REACTOR MODULE SEISMIC ISOLATION

14.4 Test Facility Options

The test facility includes the following systems and structures.

1. Intermediate Heat Transport and Heat Dump Systems
2. Refueling and Fuel Handling System
3. Plant Control and Reactor Protection Systems
4. Auxiliary Systems
5. Data Acquisition System
6. Facility Arrangements and Structures

Two dump heat options for transporting and rejecting the reactor heat are described. Facility arrangements and structures associated with each heat transport system option are also described. Included in the test facility description are the refueling and fueling handling means, plant control and protection systems, data acquisition systems, and auxiliary systems. These plus the test article interface requirements are described in the next sections.

14.4.1 Test Article/Facility Interface Requirements

The following test article/facility interface requirements are applied in developing the design of the test facility.

1. Below grade installation of the test article (see Section 14.3).
2. Thermal power (nominal rating) - 425 MWt
3. Intermediate sodium inlet/outlet - 540°F/800°F.
4. Simulated IHTS thermal-hydraulic characteristics (including natural circulation and loss of IHTS sodium).
5. Ability to perform the safety tests described in Section 14.2.
6. Prototypical refueling within the test article.
7. Control functions and external services simulated at the test article/facility interface.
8. Safety-related reactor service building, radwaste building, and cold trap vault and pipeway.

14.4.2 Heat Dump System Options

The goal of the safety test is to provide data, together with supporting analyses, that will be used to obtain certification of the standard PRISM design. Hence, the test facility must be capable of simulating the characteristics of a PRISM power plant to the extent necessary for the NRC staff to reach a favorable determination following their safety review. This means that the safety test heat dump system must produce test results that either bound the "actual" PRISM transient behavior or can be easily extrapolated to it. Since more accurate test article/test facility interface simulations generally lead to higher test facility costs, the degree of accuracy of the simulation must be balanced between heat dump system cost and simulation accuracy.

Two heat dump system options have been selected for detailed evaluation; a dump steam generator (DSG) system which closely simulates the operation of the PRISM steam generator system and a dump heat exchanger (DHX) system based on the FFTF design. These options are described in Sections 14.4.2.1 and 14.4.2.2, respectively.

14.4.2.1 Dump Steam Generator System

A full-size steam generator and an alternative steam generator system employing three smaller steam generators (using the straight, double-wall tube design of the full-size steam generator) were evaluated as dump steam generator options. Based on a qualitative assessment, the full-size steam generator configuration was selected for the dump steam generator option.

The chosen dump steam generator option consists of full-size intermediate heat transport system and steam generator system. The steam generator uses straight tubes with double-wall construction to provide a double barrier between the sodium and steam/water throughout the steam generator. The heat transport and heat rejection systems for the PRISM test facility are shown in Figure 14.4-1. Heat is transported from the reactor via the intermediate heat exchanger by the intermediate sodium system to the steam generator. The steam is delivered to a condenser. Condenser cooling is by

cooling water and a cooling tower system for heat rejection to the atmosphere. A sodium-water reaction pressure relief subsystem (SWRPRS) is provided in the event of a sodium leak in the steam generator. The preliminary design values for the heat transport systems are listed in Table 14.4-1.

The steam, feedwater, blowdown, and cooling water systems service the steam generator in a fashion that simulates a PRISM power plant. The system features steam pressure reduction valves that can be programmed to simulate the effects of a turbine on the steam generator; a high-pressure, water-cooled condenser; prototypic type feedwater pumps and high-pressure feedwater heater; prototypic feedwater and steam drum control appropriately interfaced with the control for the reactor system; a blowdown system and demineralizer to provide for the control of feedwater impurities; and a cooling water/cooling tower system to control condenser pressure and to dissipate the reactor heat to the environment.

The above heat transport and heat rejection systems are described in the next sections.

(A) Overall Description

The intermediate heat transport system (IHTS) consists of piping and components required to transport the heat from the reactor to the steam generator. The system (see Figure 14.4-2) is comprised of a piped loop thermally coupled to the reactor by the two IHX's located in the reactor vessel and to the steam generator evaporator. Intermediate sodium is circulated by a constant speed mechanical pump (located in the cold leg of the loop) through the tube side of the IHX and the shell side of the steam generator. A permanent magnet flowmeter located in the cold leg provides the flow monitor function for the loop.

The IHTS is a closed loop system with an expansion tank and argon cover gas to accommodate thermally induced system volume changes. The arrangement and relative elevation of the IHTS piping and components are designed to promote natural circulation for decay heat removal. The

initial natural circulation rate following shutdown from normal full power operating conditions is 7-8 percent normal flow.

The IHTS also includes the sodium water reaction pressure relief subsystem (SWRPRS). This subsystem consists of rupture disks, reaction products separator tank (RPST) and vent stack with flare tip and ignitor.

Auxiliary systems connected to the IHTS main loop necessary to meet operation requirements include sodium fill/drain system, steam/water-to-sodium leak detectors, recirculating cold trap system, trace heating, thermal insulation, sodium-to-gas leak detection and instrumentation.

Hydrogen leak detectors are located on the main loop piping at the steam generator outlet to allow early detection of a steam generator tube failure. A continuous sodium flow to the cold traps is provided from the system low point located on the SG shell. The cold trap loop flow is also connected to the sodium plugging indicator and sampling system. Sodium from both of these systems is returned to the IHTS expansion tank through a common line. Both supply and return lines to the sodium processing system are equipped with isolation valves.

The PM flowmeters on the main loop piping of each loop are used to evaluate plant performance.

The IHTS closed loop configuration requires cover gas volumes to accommodate system volume changes due to thermal expansion. These gas volumes, provided in the IHTS expansion tank and the pump tank, are interconnected. The pressure, approximately 15 psig, is used to assure a 10 psi minimum positive pressure differential across the IHX from the IHTS to the HPTS side.

All IHTS piping and components including the RPST are thermally insulated and trace heated. The thermal insulation of IHTS piping and components is designed to limit the surface temperature of the insulation to 140°F at rated power operation or hot functional testing with an ambient temperature of 100°F.

Sodium-to-gas leak detection is provided on all IHTS piping and components. Sodium aerosol or contact-type detectors monitor the insulation to pressure boundary annulus on all equipment. Additionally, sodium valves are equipped with contact type detectors to monitor for valve stem leakage, and major components have cable or spark plug detectors to monitor for collection of a pool of sodium underneath the components.

All materials for the IHTS piping and components are specified to minimize corrosion and erosion and ensure compatibility with the environment. The piping and fittings which make up the loops are to 304 SST. Type 316 SST is used for high strength needs. Trimetallic joints are used to make a transition from ferritic to austenitic steel piping with Alloy 800H (Ni-Fe-Cr) pipe used as an intermediate coupling.

(B) IHTS Piping

The IHTS piping (Figure 14.4-3) connecting the IHX, steam generator, pump and expansion tank are located in the IHTS pipeway running from the reactor closure to the steam generator. The use of articulating bellows joints in both cold and hot leg piping results in a simple piping layout. Within the HAA, the pipes are 20 inches in diameter and are protected by guard pipes. Outside the HAA, the 20-inch diameter piping lines from each IHX are headered into a single 30-inch diameter line for both the cold and hot legs. Three 30-inch gimballed bellows and short expansion loops are used to accommodate thermal expansion, seismic anchor displacement and design loadings. The joints allow movement of the piping in both horizontal and vertical directions and allows a simple piping layout. The IHTS pipe layout is designed to accommodate the thermal expansion of components and pipes and the relative movement of the seismically isolated reactor module.

Rigid supports and spring hangers are used to support the piping. Rigid supports restrain piping movement in either vertical or lateral directions. Spring hangers carry the dead loads only. Energy absorbers resist seismic and other dynamic loads and displacements. They consist of a system of energy absorbing flexible plates which act as elastic springs

to allow movement during thermal expansion of the piping system. Under dynamic loading conditions, energy is absorbed by controlled yielding of the plates.

(C) Sodium Pump and Pump Drive

The intermediate sodium pump (Figure 14.4-4) is a vertically oriented, single stage, double suction, free surface, centrifugal pump driven by a constant speed 4000 hp, induction motor. An auxiliary pony motor drive provides low flow (10%) capability for decay heat removal and other low power or standby conditions.

Design and performance of the intermediate coolant pump and pump drive to meet operational requirements are:

1. Capability to provide a flow of 41,000 gpm at a 120 psi static head and 540°F.

2. A main drive motor of 4000 hp.

3. Capacity in the pump tank to accommodate a free surface level change of six feet.

4. Pony motor capable of providing 10% design flow with automatic changeover from main motor to pony motor during coastdown to give uninterrupted flow.

5. Pony motor alternative power supply from plant gas turbine generator.

6. An impedance to flow between the sodium tank region of the pump and the hydraulics of the pump during operation at pony motor speed. This feature decreases the sodium level differences between the pump tank and the expansion tank, dampens potential flow oscillations following a pump trip and during sodium/water

reactions, and impedes the rapid sodium drain from the pump tank following a loss of IHTS sodium event (e.g., pipe break).

7. One sodium level probe to facilitate fill and drain operations and to monitor sodium operating levels. Note that a second level probe thimble is provided for probe calibration in place.

8. A two-inch nozzle located above the normal operating sodium level provides a connection to the gas equalization line. This gas equalization line provides a common gas path between the pump and IHTS expansion tank gas spaces, thereby maintaining equal gas pressures in the two tanks.

9. The pump shaft seal is composed of a double, oil lubricated, rotating face seal in conjunction with a labyrinth gas seal. Lubricant contamination of the sodium is prevented by employing a slinger and argon gas purge of the labyrinth seal.

10. The pump is designed for seal maintenance and replacement without main motor removal. The rotating shaft seal is designed to have a minimum maintenance interval of 10,000 hours. The pump internals are removable for inspection and servicing without disturbing the pump tank or system piping.

(D) IHTS Expansion Tank

A sodium expansion tank (Figure 14.4-5) is located in the SGB near its corresponding intermediate pump. The expansion tank is fabricated from 304/316 stainless steel and consists of a cylindrical vessel closed at each end by an elliptical head. A steel structure supports the expansion tank and connects its skirt to the steam generator building structure.

The return flow enters the expansion tank via a nozzle on the upper head. This nozzle has an extension tube dipping below the normal operating sodium-gas interface level to minimize gas entrainment. The IHTS sodium level varies as a result of system temperature changes, pump drawdown, and

system transients. The expansion tank is sized to prevent sodium level excursions from exceeding the minimum and maximum allowable pump levels. Two drywells in the tank are provided for sodium level probes which monitor the expansion tank sodium level. The expansion tank has a nozzle for connecting the gas equalization line to the reactor product separator tank. Another nozzle connects to an argon gas line, which connects to the argon supply and pump tank.

(E) Sodium Water Reaction Pressure Relief Subsystem (SWRPRS)

The SWPRS is connected to the IHTS to provide overpressure protection in the event of a sodium water reaction. Two six-inch diameter rupture disks in series on the IHTS expansion tank provide overpressure protection against steam generator water leaks of less than 3 lb/sec. For water leaks above 3 lb/sec, two twenty-eight inch diameter, rupture disks in series located on the upper shell of the steam generator provide overpressure protection. The rupture disks are connected to and discharge into the sodium dump tank (SDT). The SDT is a vertical tank designed to contain the entire sodium inventory of an IHTS loop and to separate the gaseous reaction products from the liquid/solid products in the event of a sodium/water reaction (see Figure 14.4-6). The SDT is located along side of the steam generator unit to minimize the piping between the SDT and SG. Liquid/solid reaction products and displaced sodium are contained in the SDT. Gaseous reaction products are released and burned through a stack with flare tip and ignitor connected to the SDT.

<u>Steam Generator System</u>

(A) Overall Description

The steam generator system (see Figure 14.4-7) is comprised of the steam generator and water/steam subsystem, leak detection subsystem, and water dump subsystem.

The steam generator subsystem obtains 1.89 x 10^6 lb/hr at 420°F feedwater from the feedwater system and produces 1.85 x 10^6 lb/hr of saturated 1000 psia steam. The feedwater enters the steam drum where it is internally mixed to subcool the saturated water from the steam generator. The subcooled water is then circulated by the recirculation pump from the drum to the steam generator. The ratio of the water recirculated to steam generated is 1.2/1. In the steam generator tubes the subcooled water is preheated and partially vaporized. The saturated water and steam exiting from the steam generator tubes then flows to the drum where separators, internal to the drum, separate the water and steam. A small percentage (1%) of the saturated water (before the saturated water is mixed with the incoming feedwater) is then drained from the drum for water chemistry control and returned to the feedwater and condensate system. The saturated steam then flows through dryers, internal to the drum, and on to the turbine.

The steam generator leak detection subsystem monitors the sodium at the steam generator main sodium outlet. Monitoring is by hydrogen meters which provide a signal relative to the hydrogen concentration level in the sodium. In the event of a water-to-sodium leak, changes in the hydrogen concentration levels are detected. The resulting signals are conditioned, transmitted, and displayed. Off-normal conditions are annunciated.

The steam drum mixes the feedwater with water separated from the saturated water/steam mixture and directs it to the recirculation pump. Continuous steam drum blowdown flows from the steam drum, through two isolation valves and a flowmeter to the blowdown flash tank. The subcooled water from the steam drum flows through a downcomer to the recirculation pump.

Recirculation water flows through the tube side of the steam generator. Sodium flowing counter-current on the shell side heats the water to saturation temperature and vaporizes 83% of the water to steam at full power. The mixture of saturated water and steam exits from the steam generator and flows to the integral steam drum.

Saturated steam exits from the steam drum through a single nozzle to the 24-inch diameter steam piping system. The steam line contains a flowmeter, two remote operated stop valves, and a check valve.

The steam generator is designed to be cooled by natural circulation of air over the exterior shell surface to provide an alternate method of reactor decay heat removal. This auxiliary cooling system (ACS) is required to supplement RVACS and reduces the time required to cool the reactor system and IHTS to hot standby temperature following a reactor shut-down when the steam system is not available. The ACS is not a safety-related system, but rather, is used to increase plant availability by avoiding the slow plant cool down which would occur if only RVACS were used. The ACS consists of a steel shell enclosing the steam generator so as to form a six-inch wide natural convective, air, cooling annulus. Louvers are provided to initiate air cooling.

The steam generator and water steam subsystems are comprised of the following major components:

- Steam Generator
- Steam Drum
- Recirculation Pump
- Water Dump Tank
- Water/Steam Piping
- Valves
- Hydrogen Leak Detection

(B) Steam Generator

A full-size (432 MWt), steam generator is used to illustrate the test. The steam generator is a vertically oriented, shell-and-tube counterflow heat exchanger with water/steam on the tube side and sodium on the shell side. The tubes are straight and of double-wall construction with the tubes prestressed during fabrication to assure contact. The tubesheets are fixed and a convoluted shell expansion joint provides for differential thermal expansion between the shell and tube bundle. The double-wall tube provides much greater reliability by significantly reducing the probability

of a tube leak. Double fillet welds are used to join the tubes to the tube-sheet (front and back face fillet welds). Thus, there is a double barrier between the sodium and steam/water throughout the steam generator. Figure 14.4-8 shows the general arrangement of the steam generator with integral steam drum.

Sodium entering the shell side at the inlet nozzle is uniformly distributed around the tube bundle by a selectively perforated cylindrical shroud. It is then uniformly distributed to the tube bundle by a preferentially drilled radial flow hole arrangement in the upper support plate. Crossflow baffles maintain sodium flow velocities to provide acceptable flow distribution and heat transfer.

A double-wall tube was selected for the steam generator because of the reliability offered with the double boundary separating the steam and sodium. The outer and inner tubes are sized for full design pressure. The double-wall tube is prestressed such that contact at the interface is maintained and separation of the tubes does not occur during operation.

The total heat transfer area in the tube bundle is 37,510 ft^2 based on an overall heat transfer coefficient of 360 Btu/hr-ft^2°F. Note that 18 foot long protector tubes are used at the sodium inlet region of the bundle to limit the heat flux in this region.

(C) Steam Drum

The steam drum (see Figure 14.4-8) is mounted directly on the upper head of the steam generator. The pressure boundary is made of a single cylindrical shell course and hemispherical head. The shell is made from plate formed in two 180° shell segments and the hemispherical head is made from plate formed as a complete head.

Major internal features of the steam drum consist of the following: a separator support deck, five separator risers, and five steam water separators; four banks of steam dryers situated on a support grid/drain system; a distribution ring for receiving feedwater from the feedwater nozzle and

thoroughly mixing this fluid with the downward flowing recirculating water; and a chemical addition/fluid sampling ring which connects to the sampling nozzle.

Access to the upper steam drum internals is provided through the 24-inch manway located at an elevation just above the separator can deck. Once the manway cover is removed, the separator cans are readily accessible and can be quickly removed by loosening a single marman coupling and setting the can aside. Access to the feedwater ring and other internals located at elevations below the separator can deck is through a 24-inch manway.

Feedwater enters the steam drum through a single feedwater nozzle at 420°F and is directed to the feedwater ring. This subcooled fluid then flows circumferentially around the ring exiting in a manner which assures adequate mixing of the feedwater with the recirculation water which is flowing downward through the annular downcomer plenum.

Saturated steam/water mixture from the evaporators enters into the riser plenum, providing for thorough mixing of the incoming two-phase mixture. Flow is then upward through the riser plenum and is expanded in the upper conical section prior to reaching the separator can deck. The mixture then passes through the steam separators and approximately one-fourth (1/4) of the total flow emerges from the upper end of these devices as relatively high quality steam. The steam continues to flow upward and through the steam dryers. Upon exiting from the bank of dryers, the steam has been dried and is ready to leave the steam drum through the steam outlet nozzle.

The liquid portion of the incoming two-phase flow from the evaporator is, for the most part, removed by the centrifugal action of the fixed vane steam separators and is allowed to drain down onto the separator can deck. The remaining liquid (that which was removed in obtaining the quality steam mentioned above) is removed by impingement on the corrugated plates and vanes in the steam dryers and is also drained back to the separator can deck through four drain lines. Thus, saturated liquid spills from the

separator and proceeds directly into the downcomer plenum. It is within the downcomer plenum below the drain collection box that the saturated liquid is mixed with the feedwater to produce subcooled recirculation water. This subcooled water exits the steam drum and is pumped to the steam generator lower head.

(D) Recirculation Pumps

There is one constant speed circulation pump provided for each loop to circulate water from the steam drum to the evaporator. The pump handles 5,300 gpm of water at 440°F and is driven by an electric motor.

(E) Leak Detection Subsystem

Any leakage of water/steam into the sodium stream increases the hydrogen and oxygen concentration in the sodium. The leak detection subsystem utilizes the measurement of hydrogen concentration in the liquid sodium stream as the method of leak detection. The measurement of hydrogen in sodium is accomplished by allowing hydrogen to diffuse through a thin nickel membrane, one side of which has a high vacuum held by an ion pump.

Three hydrogen detectors are included in all loops. These detector modules are installed on the main sodium piping at the steam generator outlet.

(F) Water Dump Subsystem

A water dump subsystem is provided in each loop to accept and store the water from the steam generator when rapid depressurization of the steam generator is required. Two quick opening 12-inch dump valves in parallel which are part of the steam generator water/steam subsystem, are provided at the inlet to the steam generator. These valves are in addition to the power relief/safety valves located on the steam drum. The water dump valves exhaust to the 12-inch water dump piping which directs the water/steam mixture (water plus flashed steam) to a water dump tank where the

water is temporarily stored, and the flashed steam is vented to the atmosphere. The water dump tank showing overall dimensions and major nozzles is shown in Figure 14.4-9.

Heat Rejection System

The heat rejection system transfers the main condenser and other water cooled heat exchanger rejected heat to the atmosphere through the use of mechanical draft cooling towers. The system is comprised of the main condenser, condenser air extraction, and circulating water subsystems and includes all interconnecting piping, pumps, cooling towers, fans and motors. A simplified flow diagram of the heat rejection system is shown in Figure 14.4-10.

The condenser accommodates steam flows and a heat load from the steam generator.

The circulating water subsystem provides cooling water for the condenser. Cold circulating water is supplied from the cooling tower basins to the condensers to condense the steam. The hot circulating water is returned to the mechanical draft cooling towers where heat is rejected to the atmosphere. Heat from the plant service water system is also rejected to the atmosphere in the same cooling towers.

14.4.2.2 Dump Heat Exchanger Option

The dump heat exchanger option transports the heat from the reactor (test article) to twelve sodium-to-air heat exchangers for heat rejection to ambient air. The system is comprised of three DHX loops thermally connected to the reactor via the IHX with a single connecting piping loop. Intermediate sodium is circulated by a mechanical pump located in the cold leg of each DHX loop. Headers at each end, of the connecting loop connect the three DHX loops with the two IHX's in the reactor. The connecting intermediate loop is prototypic of the PRISM IHTS piping loop. A line diagram of the system is shown in Figure 14.4-11.

Connecting Piping Loop

The piping connecting the IHX with the DHX loops is located in the IHTS pipeway running from the reactor to the pump building. The use of articulating bellows joints in both cold and hot leg piping results in a simple piping layout. Within the HAA, the pipes are 20 inches in diameter. Outside the HAA, the 20-inch diameter piping lines from each IHX are headered into a single 30-inch diameter line for both the cold and hot legs. Three 30-inch gimballed bellows and short expansion loops are used to accommodate thermal expansion, seismic anchor displacement, and design loadings. The joints allow movement of the piping in both horizontal and vertical directions and allows a simple piping layout. The IHTS pipe layout is designed to accommodate the thermal expansion of components and pipes and the relative movement of the seismically isolated reactor module.

Rigid support and spring hangers are used to support the piping. Rigid supports restrain piping movement in either vertical or lateral directions. Spring hangers carry the dead loads only. Energy absorbers resist seismic and other dynamic loads and displacements. They consist of a system of energy absorbing flexible plates which act as elastic springs to allow movement during thermal expansion of the piping system. Under dynamic loading conditions, energy is absorbed by controlled yielding of the plates.

This portion of the system (except for the DHX loop headers) is essentially prototypic with the PRISM plant.

DHX Loops

Intermediate sodium leaving the reactor IHX's is directed to a supply heater which distributes the sodium to three DHX loops. Figure 14.4-12 is a schematic diagram of one DHX loop. Sodium flows from the connecting piping loop through a header to one of three DHX loops through 18-inch diameter piping. In the vicinity of the DHX, the piping branches and reduces down to ten-inch diameter and connects to an ten-inch diameter hot leg DHX isolation valve. From the valve the pipe connects to the inlet

header of an individual DHX (of which there are four to each DHX loop, 12 total for the heat transport system). Cooled sodium from the outlet of each DHX flows through an ten-inch diameter cold leg DHX isolation valve; the piping then expands from ten inches to eighteen inches, and finally connects to the suction of the intermediate circulating pump. From pump discharge the sodium enters the return header which connects to the IHX's to complete the flow path. Sodium flow rate in each DHX loop is measured by a permanent magnet flowmeter located downstream of the pump discharge and is adjustable by a variable speed pump drive. A venturi flowmeter located upstream of the secondary pump is used for flow calibration of the secondary loop permanent magnetic flowmeter. Each DHX loop has two main 18-inch isolation valves for safety and ease of loop service.

The 18-inch diameter hot leg piping and the section of cold leg piping at the inlet to the pump are of Type 316H stainless steel. The 18-inch cold leg, 10-inch pipework, and components are of Type 304H SS. The design and maximum operating conditions for the secondary loop piping are based on a maximum fluid velocity of less than 30 ft/sec at design flow.

Expansion tanks having argon gas surge volumes are provided in each DHX loop to accommodate sodium thermal expansion and to pressurize the system. The loop cover gas pressure of up to 150 psig (i.e., at advanced operation) is maintained by control of the argon gas supply. Loop sodium pressure at the intermediate heat exchangers is always maintained above the primary loop pressure in order to avoid radioactive contamination of secondary sodium in the event of an internal leak in the heat exchangers.

The DHX 10-inch isolation valves provide the capability to valve off a DHX in the event of a leak or for maintenance.

The DHX's transfer the heat from the loop sodium for ultimate rejection to the ambient air. The four independent DHX's per loop provides flexibility of operation during all normal and off-normal events and minimizes any damage or loss of plant availability due to the failure of a single module.

(A) Secondary Coolant Pump

Each secondary coolant pump is a vertical, single stage, single suction, controlled inlet, free surface centrifugal pump and is located in the secondary cold leg piping between the DHX and return header (Figure 14.4-13).

Features of the pump design to meet system operational requirement are as follows:

1. A design flow of (later) gpm at a head of 400 feet of sodium.

2. A variable speed ratio of 2.3 to 1, which provides flow control over a range of about 50% to 100% of design flow.

3. Pony motor drive to provide 10% of design flow at three feet head with automatic takeover from main motor to pony motor during coastdown to give uninterrupted flow.

4. Optimum coastdown characteristics to minimize thermal transients in the plant while providing adequate reactor core cooling following a scram.

5. Completely drainable.

6. Prevent an inflow of seal lubricant or fluids into the pump.

7. Accommodate a sodium level change of three feet caused by secondary loop sodium volume changes.

(B) Dump Heat Exchanger

The dump heat exchangers (DHX) are sodium-to-air heat exchangers which transfer heat from the DHX loop sodium to the ambient air. There are four DHX units in each of the three loops. Each DHX is equipped with a fan with variable inlet vanes, fan drive motor, fine and coarse control dampers,

isolation gates, controls (manual and automatic), tube bundle, oil-fired preheater, ducting, stack and airflow turning vanes. The nominal thermal rating of a module is 43.3 MWt with 90°F air at initial operating conditions. The modular design provides flexibility of operation (particularly during startup, shutdown, and decay heat removal) and minimizes damage and loss of plant availability in the event of a failure of a single DHX (Figure 14.4-14).

The design features which have been incorporated into the DHX to meet the system operating requirements are as follows:

1. Maximum sodium pressure drop of 60 psi at design flow rate.

2. Fully drainable and self-venting.

3. Geometric center of the DHX tube bundle is approximately (later) feet above the IHX geometric center to insure adequate thermal driving head for natural convection cooling.

4. Sufficient air natural draft through the tube bundle to dissipate a minimum of 10% of design power at initial operating conditions.

5. Air flow shutoff devices and insulation capability to limit the heat loss to approximately 0.167 MWt per module (at 400°F sodium inlet and -10°F outside ambient).

6. Actuators for the variable inlet vanes, outlet dampers and isolation gates are provided with hand-operated overrides and are located so that they are protected from damage by a sodium fire in a module or adjacent modules .

7. Instrumentation to detect a sodium leak.

8. A failure, including a fire in a module, will not affect the operational effectiveness of the adjacent modules.

The DHX tube bundle is made up of a bank four-pass serpentine tubes, located between horizontal upper and lower headers. The four-pass serpentine tubes consist of 30-foot long finned sections joined by bare U-turn return bends. Suitable baffling at the sides and ends minimizes bypass of air. Turning vanes are provided to assure uniform flow over the tube bundle.

The variable inlet vanes, isolation gates, and control dampers are used to limit heat loss during heatup and low power conditions. The isolation gates and control dampers are used to isolate the air side of a DHX module in the event of a sodium fire. Electrical interlocks prevent closure of the DHX isolation gates unless the DHX fan drive motor is de-energized. The isolation gate actuators are limited in size so that the gates cannot close against a pressure greater than 1-1/2 inches of water. Since the normal DHX fan has a head of at least five to six inches of water, inadvertent closure of the DHX isolation gates is prevented.

The air supply system consists of a double width/double inlet centrifugal fan with air flow control provided by a variable speed coupling to vary fan speed and by variable inlet guide vanes. At the DHX thermal design conditions, an airflow of 1.96×10^6 lb/hr with an air side pressure drop of 11.0 inches of water requires 1640 fan horsepower (hp). The fan is driven by a (later) hp electric motor. Each module has a stack above the tube bundle that is sized to assure sufficient natural air draft to remove at least 10% heat load (4.3 MWt) at initial operating conditions. The DHX is designed to quickly shut off air flow by means of van closure while the fan is coasting down following a scram signal. This airflow reduction assures that sodium outlet temperature changes do not exceed in severity the thermal transients for which DHX outlet nozzle and cold leg equipment and piping are designed.

A separate indirect oil-fired heater is provided for each module to preheat the DHX tubing prior to sodium fill and also to establish or maintain a temperature of 400°F during standby when sufficient decay or pump heat is not available.

(C) DHX Isolation Valves

The DHX isolation valves are angle-globe valves (Figure 14.4-15) that are located at the inlet and outlet connections of each DHX module. The primary function of these valves is to provide the capability for isolating a module in the event of a leak and to facilitate maintenance. The following features have been incorporated into the valve design to meet system design and operational requirements:

1. Pressure drop through the valve at the full flow is limited to 4.5 psi.

2. Low leakage rate across the valve to permit drainage of the DHX module for maintenance and/or repair.

3. Closure time of less than one minute to permit quick isolation of a DHX module in order to minimize sodium fire hazards in the event of a sodium leak in the DHX.

4. Remote operating capability with manual override.

(D) DHX Loop Expansion Tank

An expansion tank is provided in each DHX loop to meet the following heat transport system design and operational requirements:

1. Accommodate the sodium volume changes due to thermal expansion over the entire operating range.

2. Contain the argon cover gas for loop pressurization up to 150 psig (at advanced operation).

A short interconnecting four-inch pipe between the loop and the expansion tank ensures equal sodium levels in the two components. A continuous flow of approximately 85 gpm in the two-inch diameter bypass line from the secondary pump discharge to the expansion tank ensures that

the sodium in the expansion tank is maintained close to the cold leg operating temperature. This arrangement minimizes the thermal transients on the pump when sudden changes in operating conditions (e.g., during a reactor scram) cause sodium to be transferred rapidly from the expansion tank to the pump. The expansion tank also receives the sodium return from the loop cold traps.

14.4.3 Reactor Refueling System

The reactor refueling system consists of the facilities and equipment for refueling the reactor and for transporting new and spent fuel between the reactor and the fuel receiving, storage and shipping facility located in the reactor service building.

The fueling equipment and procedures described in the next sections simulate the PRISM commercial plant design. Fuel handling methods and equipment used within and interfacing with the reactor are identical to the PRISM design. Procedures and equipment for handling and storage away from the reactor will be prototypical. Demonstration of fuel handling equipment and procedures is part of the PRISM design certification.

14.4.3.1 Fuel Handling Overview

The key elements of the reactor refueling system are the 1) fuel receiving, storage and shipping facility located in the reactor service building (RSB); 2) the fuel transfer cask, adaptor, and transporter for transporting fuel between the reactor and the RSB; and 3) the in-vessel transfer machine for transferring the fuel within the reactor. New and spent fuel are stored and handled at the site fuel handling cell located in the reactor service building. Fuel transfer to and from the reactor is with the fuel transfer cask and rail transporter. For reactor refueling, an adaptor with gate valve is attached to the access port of the reactor closure and the access plug in the reactor closure is removed. The cask is brought within the refueling enclosure and connected to the gate valve which seals the cask to the reactor closure. Fuel is then moved from the

cask to the transfer station within the reactor by the cask mechanism. Within the reactor, fuel is moved between core, storage racks and the transfer station by the in-vessel fuel transfer machine.

Fuel transfer through the reactor closure and within the reactor is illustrated in Figure 14.4-16 and involves the use of the fuel transfer cask and the in-vessel transfer machine (IVTM). New fuel is transferred from the cask into the reactor to a transfer station and then to the core. Within the reactor, spent fuel is transferred from the core to an in-vessel storage rack where it resides for 20 months. The IVTM is used to move fuel assemblies between the transfer station, core and storage racks. For transfer out of the reactor, spent fuel is moved first from the storage rack to the transfer station and then up into the transfer cask. The cask handling mechanism is used to move fuel between the cask and transfer station.

At the fuel receiving, storage and shipping facility located in the reactor service building, new and spent fuel are received and stored and prepared for shipment. The main components and features of the facility are the 1) spent fuel storage area, 2) fuel handling cells, 3) receiving and shipping area, and 4) instrumentation and control systems. New reprocessed fuel is brought to the facility by direct transfer from the adjacent co-located fuel cycle facility. Following receipt of the new fuel assemblies, the elements are placed in the fuel handling cell storage rack or directly transported to a reactor module. During refueling the new fuel assemblies are placed in a fuel transfer cask for transport to the reactor modules. Spent fuel from the reactors is housed in a fuel transfer cask and brought to the facility by the cask transporter. Spent fuel can be transferred directly through the fuel handling cell to the co-located fuel cycle facility or placed in temporary storage in the fuel handling cell.

In the following sections, detailed description of the key elements of the reactor refueling system are given. Covered are the in-vessel transfer machine, fuel transport equipment (consisting of the fuel transfer cask and cask transportion), and the fuel receiving, storage and shipping facility.

14.4.3.2 Reactor Fuel Handling and Equipment

The reactor fuel handling equipment provides for handling core assemblies within the reactor. It transfers fuel assemblies between core, in-reactor storage racks, and the in-reactor transfer station position. The in-vessel transfer machine (IVTM) is located on the reactor rotatable plug.

The IVTM is used to handle fuel assemblies, control rods, and other reactor components in the sodium-filled core of the reactor. The design is a modified pantograph machine with rotary seals. The machine is used only during reactor shutdown and is located in a penetration in the rotatable plug.

The machine (shown in Figure 14.4-17) is designed in two parts, the junction between the two parts is five feet above the rotatable plug. The drive section upper part is basically an electrically driven gear box for operating the in-vessel section lower part. It contains an electric motor, speed reducers, gears, torque limiting clutches, emergency hand operators, and other components necessary to provide control and instrumentation.

The in-vessel section lower part is positioned vertically from the rotatable plug and extends 39 ft into the reactor. The IVTM is positioned 3 ft from the center of the rotatable plug. The machine can be rotated and the pickup leg driven outwards to position the grapple over the required fuel assembly. The pickup leg can be moved radially outward to 36 in. to position the grapple. The grapple can thus be positioned over any core assembly position.

The machine is normally stored, while the reactor is in operation, nearest to the transfer station with the pantograph pickup leg facing toward the transfer station. The machine can be rotated 225° with the stop on the centerline toward the center of the core as shown in Figure 14.4-18 and 14.4-19.

Position accuracy of the machine is essential and is provided by the instrumentation system. The instrumentation system will provide continuous position indication for the control room of all machine movements.

14.4.3.3 Fuel Transport Equipment

Fuel transport equipment is used to exchange and transport new and spent core assemblies between the reactor module and the nearby reactor service building. This equipment consists of the fuel transfer cask, adapter valve, and the cask transporter.

Fuel Transfer Cask

The fuel transfer cask (FTC) is a multi-element cask used to transfer three core assemblies, new or spent assemblies between the RSB and the reactor module. The cask, shown on Figure 14.4-20, is 22 feet-11.25 inches high and 53.20 inches outside diameter. The structure has a 15.35-inch thick shielding cylinder around the three core element cavity.

Within the cask is a carousel with three fuel storage positions. The carousel is suspended from the top of the cask and can be rotated to align the fuel with the closure access port. The carousel is motor driven for positioning. To discharge a core assembly, a drive within the cask deploys a bi-stem (dual metal nested strap) that is attached to the pot. The stem stays attached to the pot while in the reactor but is able to be detached for maintenance at the RSB. The bi-stem is attached to the pot such that the IVTM has the freedom to move into position over the pot, engaging and removing the core assembly for transfer within the reactor area and thus reduce the number of steps during a refueling cycle.

Cask Transporter

The transporter is used for moving casks with new and spent fuel between the reactor and the reactor service building. Figure 14.4-21 shows the cask transporter. The overall dimensions are about 30 ft by 12 ft and 25 ft high. The self-propelled cask transporter moves on rails; an

operator cab is provided. An alignment mechanism allows the operator to position the transporter above the reactor being refueled and the reactor service building fuel transfer port. A hydraulic jacking mechanism lowers the fuel transfer cask for connection with a spool adapter located above the refueling port in the reactor closure. The cask transporter is constructed of structural steel and is classified non-seismic Category I.

Adaptor Valve

The adaptor valve provides the means for connecting and mounting the fuel transfer cask to the reactor closure. The adaptor is cylindrical and extends from the reactor closure to just above the head access area ceiling (grade level). The adaptor includes a gate valve to provide a gas tight access to the reactor. For reactor refueling, the adapter is mounted on the reactor closure over the access plug. The access plug is removed through the gate valve. The fuel transfer cask is brought over the reactor and coupled to the top end of the adaptor. The gate valve of the adaptor is opened and fuel is passed in and out of the reactor.

14.4.3.4 Fuel Receiving, Storage, and Shipping Facility

The fuel receiving, storage, and shipping (FRSS) portion of the fuel handling system provides the capability to receive, unload, inspect, and store new core assemblies before their insertion into the reactor and to prepare for shipment and transfer spent core assemblies to a co-located fuel cycle facility or ship to an off-site reprocessor. The FRSS also includes the instrumentation and control function for the entire reactor refueling system. The instrumentation and control function provides the computer system that records all refueling data, and also the recording, and storing of information on all core assemblies entering and leaving the plant, as well as their locations within the plant. It is this system that provides the special nuclear materials accountability and the safeguards information.

The main components or areas of the FRSS are: (1) the temporary storage for new and spent core assemblies after receiving and prior to shipment (2) the inspecting of new core assemblies, (3) the receiving and shipping area where trucks and railcars are loaded and unloaded, and (4) the instrumentation and control system that oversees, controls and records all of the data associated with handling and storing fuel and other core assemblies. Equipment and instrumentation are provided for cooling, assembly temperature monitoring, and leak detection.

Key Requirements

Key requirements of the FRSS configuration and operation are as follows:

1. The FRSS shall support the refueling of the reactor; the FRSS shall function with the reactor fuel handling system in this operation.

2. The temporary spent storage shall be located inside the reactor service building.

3. The FRSS shall provide safeguards, surveillance, and accountability of all fuel assemblies at all times and locations.

4. New fuel shall be inspected if received from off-site for shipping damage and safeguards identification before it is placed in the reactor, and spent fuel shall be inspected for safeguards identification before shipping offsite.

5. The FRSS components shall be designed to be shielded and sealed where necessary to protect the health and safety of the plant operators and the general public during normal and accident conditions.

6. The irradiated fuel shall be properly controlled at all times while it is being stored and handled in order to prevent overheating and fuel cladding rupture.

7. New and spent fuel shall be maintained in subcritical configurations at all times.

Spent blanket assemblies and other core assemblies will be transferred directly to the FHC from the reactor during each the refueling period. The quantities for each reactor and the exchange during refueling are as follows:

CORE ASSEMBLY	ASSEMBLIES HANDLED DURING REFUELING
FUEL	14 (After 20 Months In-Vessel)
INTERNAL BLANKET	8
RADIAL BLANKET	16
RADIAL SHIELD	20
CONTROL	∿ 1
TOTAL	59

The fuel assemblies are stored in the reactor vessel for two years after which the decay power has decreased to 1.2 kW maximum. At this low decay level, the fuel assemblies do not require active cooling and can be shipped directly to the co-located fuel cycle facility. The control rods and blanket assemblies can be transferred without any delayed storage in the reactor vessel because of their low decay power.

Spent fuel is removed from the reactor and transported to the RSB. There, the spent fuel is passed through a port into the FHC. The fuel handling mechanism in the FHC moves the fuel assembly to either a temporary storage rack or directly into the co-located fuel cycle facility.

The FHC is located in the reactor service building at an elevation above the receiving area. The FHC is a shielded and sealed inert atmosphere cell that forms the passage between the receiving port and the shipping port. Inside the cell are the components that move, and store

core assemblies in inert gas and provide fuel safeguards and surveillance functions. Television is used for internal viewing. Electric manipulators are provided for general purpose work and limited maintenance.

Mechanisms are located within the cell to grapple, lift, and transport bare core assemblies. Fuel assemblies weigh about 1000 lb. The tube hoist has a reach capable of picking up or depositing core assemblies in the shipping cask, and the storage areas.

New fuel assemblies will be brought into the FHC directly from the co-located fuel cycle facility.

Receiving and Shipping Area

The receiving and shipping area is located inside the reactor service building. Facility tracks continue inside the RSB where the cars or carriers are unloaded and the core assembly containers other than fuel assemblies are handled. As previously mentioned, new fuel assemblies are received directly from the co-located fuel cycle facility. A truck road also follows the rails into the building area.

Primary components inside of the reactor service building receiving area are the new core assembly inspection stations for control and shield assemblies. The new assembly inspection station is a structure used to inspect new control and removable shield assemblies. It is possible to inspect these new assemblies at this station in an open air environment. It is located to one side in the open RSB receiving area. The assembly containers are upended by the RSB crane in the open area and placed inside the inspection station. The assemblies are then manually inspected for identification, shipping damage, and gross flow blockage. Control rods are also inspected for proper operation of the neutron absorber columns in their ducts. After inspection, acceptable assemblies are then introduced into the FHC for transfer to a module.

Instrumentation and Control

The instrumentation and control portion of the refueling system is designed to support both normal and infrequent fuel handling operations. Refueling is planned and computer programmed before the refueling operation begins. The refueling plan contains a list of the core assemblies to be changed, their serial number, current location, location after refueling, the sequence in which core assemblies are to be transferred, and any special conditions that may be of interest to the operator. The refueling operation itself is essentially automatic, with the operator signaling the control system to continue after his approval at each planned check point.

This system contains all the information and data required for safeguards and surveillance of the special nuclear materials. It includes data on all fuel and blanket assemblies onsite. The locations, serial numbers, nuclear data, burnup, shipments, and receipts are among the data maintained on each assembly. All of this data is retrievable at any time upon request. This system, in conjunction with the mechanical fuel handling equipment, is able to check or verify any fuel assembly at any time in a storage area.

14.4.4 Plant Control and Reactor Protection Systems

14.4.4.1 Plant Control System

Goals, Objectives, and Requirements

Elements of the plant control system for the PRISM test are based on a state-of-the-art "control engine" concept for distributed optimal control of a multi-module power plant. All of the coordination of distributed local control subsystems is from one centralized control center. It incorporates highly automated, robust digital control systems design, and optimizes and allocates decision making responsibility between the plant operations staff and the automated control systems. Many of the features of the PRISM plant control system are directly applied to the design and operation of the test facility plant control system.

Design Approach

Major design parameters for the PRISM test plant control system will be identical to those specified for the PRISM plant control system. These parameters include system limitations, precautions and setpoints, and modes of operation. Any changes or enhancements to these parameters due to the safety test modes of operation will be documented in the specifications for the safety test plant protection system.

The plant control system consists of hardware, software, and peripheral facilities required to perform the functions of plant control, protection of the plant investment, non-test related data handling and transmission, and safety test related functions. Although not safety qualified, the PCS will use highly reliable fault tolerant digital equipment. The PCS will have a distributed control and data communication architecture with quad redundant, independently routed data transmission systems.

The plant control system provides overall integration of the plant operation using localized subsystem control and investment protection whenever appropriate. Information on plant performance used in the control of the plant is carried by the data transmission system, which is an integral part of the plant control system.

The PCS will provide local control over the module power and sodium exit temperatures by automatically positioning the rods to meet module power demanded by the operator. Remote manual control of this subsystem will also be provided. Displays of rod positions, core neutron flux distribution, and core power distribution will be available to plant operators. Other subsystems will contain controllers for the primary and intermediate sodium heat transport systems, the steam generator, the secondary water/steam system recirculation and feedwater flows. Primary sodium pumps and intermediate pumps primary and pony motor drives are controlled by the PCS. Water side steam generator drum level, drum drain flow, and feedwater are all controlled by local subsystems of the PCS.

Sensor Selection and Location

The number and location of reactor module PCS and RPS sensors will be similar to that provided for PRISM plant (see Chapter 7.0). All sensors used in the reactor protection system, including those required for post-accident monitoring functions are Class 1E sensors. All Class 1E sensor locations will have quad redundancy, and whenever possible, and a direct measurement will be made of the variable.

Sensors specific to the experimental program will not be included as part of the actual control system. The signals from these sensors will be transmitted via a separate data acquisition system to a dedicated data acquisition computer. Sensor numbers and locations will be specified in conjunction with the experimental program definition.

14.4.4.2 Reactor Protection System

The RPS for the PRISM test will replicate the commercial PRISM reactor protection system, documents and specifications. In particular, the design basis document and RPS specification will be almost identical. The safety test may require a slightly augmented version of these requirements due to the proposed safety test program, which is expected to drive the test reactor towards abnormal operation. However, no changes in the RPS will be introduced that will invalidate certification of the RPS for commercial application.

Overview of Approach

The system has five functions and features: 1) safety functions (trips), 2) radiation monitoring functions, 3) post-accident monitoring function, 4) interlock logic and trip actuation logic, and 5) output and recording devices.

The five parameters that will activate the reactor protection system are indicated in Table 14.4-2. When activated, the system functions to: 1) provide trip signal to release all secondary control rods; 2) initiate EM

pump coastdown; 3) activate post-trip control rod drive-in motors to assure full control rod insertion; 4) provide reactor tripped signal input to PCS for control system adjustment as a result of a reactor trip. The PCS can then actuate additional heat removal systems, or initiate investment protection functions; 5) provide electrical signals to the PCS and remote shutdown center that indicate an incident is in progress, provide assurance that protection functions are completed effectively, and allow evaluation of plant condition.

Radiation Monitoring Function

The radiation monitoring system will provide quantitative levels of radiation levels during all operating, shutdown, abnormal, and accident conditions. Monitors will be positioned in the areas surrounding the module, in the head access area, the safety qualified equipment vaults, and at the site boundaries. The safety qualified instrumentation vaults are designed to be accessible under all accident conditions. The radiation monitoring system for the PRISM test will be a replica of that specified for the PRISM commercial plant.

Post-Accident Monitoring (PAM)

Those sensor readings that are required by the operator to assess the state of the reactor system and its associated heat removal systems will be displayed and recorded in the control center, in the remote shutdown facility, and if appropriate, local to the monitored system or subsystem. The parameters that are monitored as part of the post-accident monitoring system are replicated from those specified for the PRISM commercial plant. Typically those parameters shown in Table 14.4-2 are supplemented by sensors monitoring: 1) reactor cover gas pressure; 2) control rod insertion to full extent; 3) sodium aerosol in annulus between reactor vessel and containment vessels, in the head access region, and in the reactor vessel auxiliary cooling system (RVACS); 4) radiation in the head access area, at selected regions surrounding the reactor, the instrumentation vaults, the RVACS inlet and outlet, and at the site boundary; 5) the thermal-hydraulics conditions associated with the RVACS, including air flow and inlet and

outlet temperatures; (6) head penetration isolation valve actuator position or valve stem position as appropriate; and (7) status of the Class 1E power supplies.

14.4.4.3 Plant Control and Reactor Protection Systems Interfaces

A design objective is to minimize interfaces between the plant control and reactor protection systems. Any function that is shared by both systems must be classified to the same level as the protection system. All parts of the control system that are shared with the protection system must be Class 1E, and in the demonstration test would be replicated to ensure certification. It is not possible to provide complete separation of the two systems. Bypass of protection system function is required during all modes of PRISM operation.

1. Bypass during power operation
2. Bypass to allow operation during reactor startup
3. Bypasses during plant maintenance to verify operation of components or subsystems

These bypasses are initiated and controlled by software logic within the RPS. The logic and bypass functions must be replicated during the PRISM safety test. Each of these modes of operation is considered further in the next subsections.

<u>Power Operation Interfaces</u>

The reactor trip functions, both initiation and actuation are under the control of the reactor protection system. Full regulatory requirements are met, including Class 1E qualification. If the plant control system initiates a trip to protect the capital investment, the same equipment is used to initiate and actuate the plant trip. Loss of the PCS will also initiate a trip, the loss of a handshake signal between the RPS and PCS is evidence of loss of control function. The trip and handshake signals are carried on a Class 1E isolated channel between the RPS and PCS. The equipment that is used for both safety and non-safety functions become:

1. The channel between the two systems up to and including the Class 1E isolation device.

2. The logic circuit within the RPS which recognizes and reacts to specific trip and handshake signals from the RPS.

Both of these will be replicated in the RPS for the PRISM safety test, together with any handshake signals indicating completion of operations sent to the PCS.

Reactor Startup Mode of Operation Interfaces

The interfaces between the RPS and PCS become more complex as the shutdown reactor is started up and commences power operation. When the reactor is in a shutdown mode, various interlocks are operational to defeat any operation that would endanger the reactor or critical safety devices. For example, the sodium cleanup system is connected to the reactor sodium inventory only during reactor shutdown phases of plant operation. Before the reactor commences power operation, double isolation valves will close off the cleanup system connection pipes. This action ensures the containment boundary is not open during power operation of the reactor. The PCS originates the request to the RPS to enter a startup mode of operation. Within the RPS the series of commends from the control system are handled by logic systems. The logic systems can be either firmware or software implementation of the request to remove interlocks and allow startup of the reactor. The request signals to enter the startup mode of operation, the logic systems responding to these commends, and any handshake between the RPS and PCS verifying actions implemented will be replicated in the PRISM safety test.

Maintenance Mode of Operation

During reactor maintenance the RPS remains active, with a "watchdog" function, allowing corrective actions should a maintenance error lead to a safety parameter threshold being exceeded. However, there is a need to bypass a threshold when calibration or maintenance is being performed.

Such bypasses are allowed provided the "watchdog" function is not overridden. For example, when measuring the control rod drop time, it is necessary to withdraw a rod from the core. In order to do this the drive-in motor must be de-energized and the latch mechanism activated. The logic systems within the RPS allow such actions upon request from the control system. The RPS is designed to accommodate these requests, while ensuring full protection and oversight of the safety functions is maintained. The request signals to enter the maintenance mode of operation and to perform predetermined maintenance operations, and the logic systems responding to these signals will be replicated in the PRISM safety test RPS.

Data Output and Recording Devices

For the PRISM reactor the safety parameter display system is part of the PCS. The information management subsystem of the PCS provides a safety parameter display as a default screen following any incident or as an operator option at any time. The same approach will be taken for the PRISM test.

As a diagnostic aid about 500 raw data signals will be continuously recorded onto a storage device. Data will be recorded in a first in-last out mode, resulting in data recording of at least four hours prior to any incident and four hours subsequent to any incident. Any activation of a safety function will automatically initiate this long-term data storage function. It is expected that optical disk data storage will be a well developed technology by the time the safety test reactor is operational. This technology will allow up to four days data to be stored prior to and following any incident.

Any data transferred from the PCS to the PCS in the PRISM design will be replicated in the test RPS.

14.4.5 Auxiliary Systems

Described in this section is the reactor cover gas change system, the systems for handling and processing primary and intermediate sodium, and

the radioactive waste systems for processing and disposing of gaseous, liquid, and solid radioactive waste. Also covered are the systems that distribute the inert gas throughout the plant and the systems that monitor the purity of the primary sodium, intermediate sodium, and the inert gases. Further, brief summary descriptions of the remaining test facility systems are covered. These systems directly or indirectly support the heat rejection function of the plant.

14.4.5.1 Reactor Cover Gas Cleanup Subsystem

The PRISM reactor is designed to operate as a hermetically sealed system and is normally opened only for refueling. Thus, there is no feed/bleed of reactor cover gas during operation. The cover gas is decontaminated or replaced prior to refueling and the cover gas pressure established after refueling and prior to sealing the reactor system.

For the safety test two approaches are being considered for cover gas cleanup. The first would simply duplicate the PRISM plant design. This consists of a portable, vehicle mounted, helium gas supply subsystem to evacuate, purge, and establish the reactor system cover gas pressure prior to reactor startup and during refueling and maintenance. The subsystem consists of a helium supply, filter, vacuum pump, receiver tank, vapor trap, compressor, storage/transfer tank, and the necessary piping, valves, instrumentation and controls to complete the installation. The used cover gas is taken to the radwaste building for processing. The alternate approach consists of permanently locating the cover gas cleanup equipment in the nearby radwaste or reactor service buildings and connecting it to the reactor with a piping loop and isolation valves. As with the portable subsystem, the permanently connected subsystem would only be operated during reactor shutdown.

Selection of the approach for the safety test will be based on economic evaluations which will be completed in the next phase of study.

14.4.5.2 Primary Sodium Processing Subsystem

The primary sodium subsystem provides purification by cold trapping for the sodium in the reactor vessel. Primary sodium purification normally occurs during reactor refueling shutdown periods. The subsystem is hardened (Seismic Category I) and is designed to handle primary sodium outside the reactor vessel during power operation.

The subsystem uses a nitrogen-cooled cold trap and pump to purify the sodium with forced circulation provided by the EM pump at a rate of 60 gpm. The closed nitrogen system is used as the cooling medium to prevent any possible interaction in the cold trap or pump between radioactive sodium and air in the event of a sodium leak. Double isolation valves are located inside the reactor head access areas as well as within the primary sodium service building in order to minimize the escape of sodium to the outside atmosphere in the event of a leak.

Each of the major components of the processing subsystem is described below.

Primary Sodium Cold Trap

The primary sodium cold trap is rated at 60 gpm at 875°F. The cold trap consists of a regenerative heat exchanger (economizer) located in a horizontal configuration on top of a crystallizer tank which is encased in a cooling jacket. The economizer shell, which is approximately six feet in length and twelve inches in diameter, contains 80 3/4" O.D. tubes. The crystallizer tank which has a packed volume of 750 gallons, is approximately five feet in diameter and five feet in height. The cooling jacket is one inch wide and contains 250 1/8-inch thick fins, 0.8 inch wide to improve heat transfer. Both the annulus and center section inside the crystallizer tank are filled with stainless steel mesh. Nitrogen circulating through the jacket around the crystallizer tank provides cooling for the sodium in the annulus, which causes soluble impurities, principally sodium oxide and hydride, to precipitate and collect on the stainless mesh. Cold trap material is Type 300 series stainless steel. One cold trap is

expected to be capable of servicing the reactor module for the life of the facility based on an oxide retention of 20 volume percent of the packed bed.

The cold trap is provided with temperature sensors on the crystallizer and economizer to monitor temperature distribution during operation. Electrical resistance-type heaters are provided to preheat the trap prior to startup. Pressure drop across the trap is measured to monitor the degree of crystallizer plugging. A plugging temperature indicator is used to measure the sodium quality and saturation temperature.

Primary Sodium Processing Pump

The primary sodium processing pump is a nitrogen-cooled, induction-type EM pump. The pump is sized to deliver 60 gpm at 875°F at a differential pressure of approximately 25 psi. The pump sodium pressure boundary is Type 300 stainless steel. Nitrogen cooling is provided by the cold trap nitrogen cooling system. The pump power supply consists of an auto-transformer which is capable of maintaining the voltage to the pump within 1% of the set voltage over the range of 56 to 560 volts with a 480 volt supply. Shunt capacitors are provided so that the power factor will not be less than 90% lagging at full load. Upon loss of voltage, the control will return to zero voltage setting; an interlock prevents restarting the pump until the zero voltage output setting is attained.

Nitrogen Blower

A nitrogen blower is used to provide forced circulation of nitrogen through the primary cold trap cooling jacket at a nominal rate of 10,700 scfm. An additional 1000 scfm is required to provide cooling to the EM pump. At 11,700 scfm, the static pressure drop through the nitrogen loop is estimated to be 20 inches of water. The blower speed is constant; nitrogen flow is controlled in response to cold trap temperature by a flow control valve located between the blower and the cold trap. The blower drive is a 50 hp electric motor. The overall size of the blower/drive is estimated to be 52"L x 60"H x 68"W.

Nitrogen Cooler

The nitrogen cooler is a cross-flow heat exchanger used to cool the nitrogen after it passes through the cold trap and EM pump. Air is used as the cooling medium to reduce the nitrogen temperature from 190 to 140°F. The tube bundle is about 60"W x 60"L x 18"H and uses fins to obtain high heat transfer rates. The air side flow is provided by a standard industrial fan at a nominal rate of approximately 7000 cfm with a pressure drop of about six inches of water and is driven by a 2 hp electric motor. The estimated size of the blower/drive is 38"L x 48"W x 52"H.

Structure

All components and piping which handle sodium are contained inside a shielded cell. The processing subsystem discharge lines are routed from beneath the primary sodium surface in the reactor vessel through the reactor head access area and pipe tunnel out to the shielded cell which is located near the center of the three reactor modules.

The tornado hardened, seismic Category I structure is constructed of reinforced concrete with a thickness to accommodate shielding and structural requirements. This structure is about 25 ft by 57 ft in plan view, 27 ft high.

14.4.5.3 Intermediate Sodium Processing Subsystem

The intermediate sodium processing subsystem (ISPS) provides continuous purification of IHTS sodium, as well as perform the initial fill operation for both the IHTS and reactor vessel.

The ISPS is comprised of the following components:

1. Intermediate Sodium (EM) Pump
2. Intermediate Sodium Cold Trap (Economizer Plus Crystallizer)
3. Cold Trap Air Blower
4. Interconnecting Piping and Valves

The initial sodium cleanup load is much greater than during plant operation due to rust and other oxides in the system. Connections are therefore provided for an additional temporary cold trap to be used during plant startup for the initial sodium cleanup operation.

A temporary connection in the EM pump suction line is provided for the ISPS to receive fresh sodium from tank cars or drums. Another connection is located downstream of the cold trap to allow a temporary connection for the initial fill of the reactor vessel with fresh sodium or to transfer sodium from the IHTS to tank cars.

IHTS Purification

The ISPS provides continuous purification of intermediate sodium during all modes of operation, including normal operation, hot standby, and refueling. Sodium is extracted from the IHTS cold leg at a constant rate of 120 gpm by the ISPS EM pump, circulated through the cold trap to remove impurities, and then returned to the IHTS expansion tank.

The ISPS normally operates continuously due to the constant sources of oxygen, hydrogen, and tritium leakage into the IHTS. Oxygen and other impurities enter the IHTS with the argon cover gas at the pump and expansion tank and at the pump seal which is purged with argon. The existence of over 2 ppm of oxygen can have a detrimental effect on the operation of the IHTS leak detection system. The hydrogen source results from corrosion in the steam generator tubes; most of this hydrogen diffuses through the tubes into the sodium and reacts to form sodium-hydride; its concentration in the IHTS should be maintained below 0.2 ppm. Tritium is transferred into the IHTS from the reactor system by diffusion through the IHX. Because the primary sodium is not purified continuously during normal plant operation, virtually all the tritium produced in the reactor will diffuse into the IHTS.

Intermediate Sodium Fill Operation

The ISPS is used to perform the initial fill of both the primary and intermediate plant sodium systems. IHTS fill is accomplished by pumping the fresh sodium through the ISPS loop into the IHTS expansion tank. Reactor vessel fill is facilitated by temporarily connecting a supply line to the ISPS. Fresh sodium is pumped to the reactor vessel using the ISPS EM pump. Upon completion of the fill operation, the reactor sodium supply piping is disconnected.

All transfer operations are accomplished with the molten sodium between 300 and 400°F. The unloading station is located in an air atmosphere, with splash guards and drip pans provided to contain sodium leakage. Weather protection is required for the drum station during unloading and for new and used drum storage.

Intermediate Sodium Processing Pump

The intermediate sodium processing pump (shown in Figure 14.4-22) is an air-cooled, induction-type EM pump. The pump is sized to deliver 125 gpm of sodium at a differential pressure of 50 psi at 650°F. The pump is used to deliver the purified sodium to either the reactor vessel, the RPST, or the IHTS expansion tank.

During normal operation the pump is used to transfer sodium from the IHTS cold leg to the intermediate sodium cold trap, and back to the IHTS via the expansion tank.

The intermediate sodium processing pump power supply consists of an autotransformer which is capable of maintaining the voltage to the pump at ±1% of the set voltage over the range of 56 to 560 volts with a 480 volt supply. Shunt capacitors are provided so that the power factor will not be less than 90% lagging at full load. Upon loss of voltage, the control will return to zero voltage output setting. An interlock will prevent restarting the pump until the zero voltage output setting is attained.

Intermediate Sodium Cold Trap

The intermediate sodium cold trap (see Figure 14.4-23) is an air-cooled unit. There is normally one intermediate cold trap for each ISPS loop, with connections available for a second temporary one to be used for initial IHTS cleanup only. The permanent cold trap is rated at 125 gpm at 540°F. The cold trap consists of a shell-and-tube economizer located in a vertical configuration above and adjacent to a crystallizer tank (1500 gallon packed volume) which is encased in a cooling jacket through which air is passed to provide the necessary cooling. The pre-startup temporary trap is of similar design with the exception that it is sized to cool sodium entering at 750°F and containing an abnormally high concentration of impurities.

The crystallizer tank is 6.3 ft in diameter and 6.3 ft in height. The coolant channel is 1-1/2" wide and contains 325-1/8" thick fins, 1-1/8" long to enhance heat transfer. Both the annulus and center section are packed with stainless steel mesh. During operation, hot sodium from the IHTS loop is forced by the ISPS EM pump through the economizer shell, down through the sodium annulus inside the crystallizer tank, up through the center of the crystallizer tank, through the economizer tube bundle, and back to the IHTS loop. Air circulating through the channel surrounding the crystallizer tank cools the sodium to just below its impurity level saturation temperature which causes most of the sodium oxide and other impurities to precipitate out and crystallize on the stainless steel mesh. The sodium residence time in the crystallizer tank is about 12 minutes. The crystallizer is designed to retain 5600 lbs of Na_2O with a capacity factor of 20%. Pressure drop across the trap is measured to monitor the degree of crystallizer plugging.

A plugging temperature indicator is used to measure the sodium quality and saturation temperature. Under normal plant operation, the life of an ISPS cold trap (crystallizer) is estimated to be five years.

Electrical resistance-type heaters are provided to preheat the cold traps (economizer, crystallizer, and piping) prior to initial startup and prior to startup after the cold traps have been shut down for repair or other system maintenance.

The cold trap components are designed and located near grade to allow expeditious removal and replacement, or other maintenance, by direct personnel access. The cold trap is equipped with temperature sensors on the crystallizer and the economizer that monitors the temperature distribution during operation. Controls maintain the economizer temperature above saturation temperature by controlling the air flow over the cold trap via a variable-speed air blower; this minimizes the possibility of crystallization in the economizer and plugging of the inlet to the crystallizer.

Air Blower

The intermediate cold trap air blower is a standard flared outlet fan which is located next to the cold trap in the steam generator building. The fan is rated at 16,500 cfm with a differential pressure across the cooling jacket of about 7.5 inches of water. The motor is variable speed to allow control of the sodium temperature in the crystallizer tank and is rated at 1400 rpm and 25 hp.

14.4.5.4 Impurity Monitoring and Analysis

The impurity monitoring and analysis system provides for the sampling, monitoring and analysis of the sodium and the nitrogen, helium and argon cover gas systems in the plant, and acceptance sampling and analysis of incoming argon, helium and nitrogen.

Plugging Temperature Indicator

The impurity monitoring and analysis system provides sodium plugging indicators for the primary and intermediate sodium. The plugging temperature indicator (PTI) is a device for determining the impurity saturation temperature of sodium, which indicates the soluble impurity concentration.

A schematic diagram of the PTI is shown in Figure 14.4-24 The PTI cools the sodium, pumps it through an orifice plate, which is at the coolest point in the device, and reheats the sodium as it is returned to the system. As the impurities in the sodium are cooled below their respective saturation temperatures, nucleation and precipitation of the impurities occur, resulting in a flow decrease through the orifice plate. The temperature of the sodium at the time of the first sustained flow decrease is referred to as the plugging temperature. When the orifice plate is reheated, the flow increases as the impurity plug is dissolved. The saturation temperature is calculated from a series of plugging and unplugging temperatures.

Sodium Sampler

An intermediate sodium sample station is provided for the IHTS and is connected to the intermediate sodium processing subsystem (ISPS). Sodium samples can be taken during all operating conditions of the ISPS. Sodium samples are obtained using the bypass sampling method and will be analyzed primarily for oxygen and hydrogen. A bypass sodium sample will be collected in a vessel which, through extended exposure to flowing sodium, has been cleaned and equilibrated isothermally with the bulk sodium.

The sample station consists of a sample vessel, inlet and outlet lines with double manual isolation sodium valves, and a helium connection for leak checking. The station is similar to that used for sampling primary sodium except that shielding and remote operation is not required.

14.4.5.5 Remaining Plant Systems

This section provides brief summary descriptions of some of the remaining systems. These systems are comprised of those systems which directly or indirectly support the heat rejection function of the plant.

Building Electrical Power System

The building electrical power system provides for distribution and control of auxiliary electrical power within the plant. The system provides reliable power during normal operating conditions and provides for safe shutdown in the event of an accident or unit trip.

The auxiliary power system consists of both dedicated and common ac and dc power systems.

Batteries and static inverters provide sources of uninterruptable ac power for control, supervisory monitoring, essential services and safe shutdown of each power block. Uninterruptable power supply systems are provided for each safety related reactor instrumentation channel, EM pump coastdown and for the common facilities.

Instrument ac power systems are provided for each unit and for the common facilities. These systems provide ac power for control and instrumentation circuits and for plant communications.

Nuclear Island and Balance of Plant HVAC Systems

The nuclear island (NI) and balance of plant (BOP) heating ventilation and air conditioning (HVAC) systems provide heating, ventilating, and air conditioning for the various areas of the NI and BOP buildings during normal and off-normal conditions. The system maintains the temperature, humidity, pressure, and air cleanliness required for the areas served. Each building or area includes one or more subsystems designed to provide for the specific HVAC needs of that particular building or area.

One of the basic functions of the NI and BOP HVAC systems is to remove heat generated within the buildings or areas from various sources. This is generally accomplished either by circulating outside air through the area or by recirculating air through coolers.

Plant Fire Protection System

The plant fire protection system (PFPS) is comprised of two systems:

- o Sodium Fire Protection System (SFPS)
- o Non-Sodium Fire Protection System (NSFPS)

The PFPS provides prevention, detection, containment, control, suppression and extinguishment, together with the mitigation of consequences, of plant fires.

The SFPS provides means to preclude public radiological health hazards, as well as minimize property damage, in the event of a fire caused by the accidental leakage and exposure of sodium to an air atmosphere. Suppression of liquid sodium fires in an air atmosphere is accomplished by built-in, dedicated, passive systems for large spill fires or fires in normally unoccupied areas. Suppression of small fires is accomplished through manual firefighting efforts using portable extinguishers distributed throughout the NI buildings. The NSFPS provides means for minimizing property damage, increasing personnel protection, and reducing loss of power generating capability, as a result of fires in buildings and areas of the plant which do not contain alkali metals.

Liquid Metal Piping and Equipment Heating and Insulation System

The liquid metal piping and equipment heating and insulation system provides electrical trace-heating for sodium systems, pipe and vessel insulation for the sodium systems, and a gas heating system for preheating the reactor vessel.

The electrical trace-heating system provides current to heaters of the mineral insulated cable or rod type. The cable is either wrapped around the component and piping or placed in a zig-zag pattern on the surface of the component. The insulation system consists of an inner jacket of stainless steel, insulation layer of alumina silica insulation, and an outer protective jacket of stainless steel.

Radiation Monitoring System

The radiation monitoring system ensures radiation protection to plant personnel and the surrounding environment during all foreseeable operating and accident conditions. Continuous radiation monitoring and sampling analysis of selected radioactive processes are performed. Continuous monitoring for airborne radioactivity is also conducted to verify control room habitability. Sampling and accompanying counting room analysis is performed at each plant effluent point which has the potential for radioactive release to determine the type and quantity of radioisotopes released to the environment. Portable health physics equipment is provided to perform general radiation surveys, radioisotopic analysis of low radioactivity samples, and to support all operation and maintenance functions.

14.4.6 Data Acquisition System

The primary function of the data acquisition system for the PRISM test facility is to acquire, process, and condition sensor outputs during the test program. The inputs to the data acquisition system will be from both specially installed sensors to monitor the plant during the test program, and also sensors installed for plant protection and control functions. Input from the latter sensors will be via optically isolating connections. Hardware and software for the data acquisition system will generally follow the standardization requirements for the RPS and the PCS. Since the data acquisition system is a "one-off" system, strict compliance is not necessary. In particular, the current software developed at ETEC can be applied to the PRISM test. This software has been developed to allow easy porting to other hardware and other operating systems. It is written in ANSI Standard FORTRAN-77. Adapting this software to the PRISM test will result in significant reductions in the cost of implementing the data acquisition system.

The data acquisition system is independent of the reactor protection system and the plant control system, except for parallel use of sensor outputs. It will be implemented with simple data acquisition capabilities. The only data manipulation will be transformation to engineering units and

simple graphical displays of variables against time. The output network of the host computer includes ports for engineering workstations. Each workstation is a computer which can request data from specific sensors. The application programs run within the workstation provide the dedicated processing capacity for sophisticated data transformation and graphing.

By using the data acquisition system as a data gatherer, and independent of the PCS and RPS, with a distributed output network of workstation, it is unlikely that the system will become overloaded. It is capable of easy expansion of output to many application specific workstations or to many off-site terminals and simulation facilities. An important function of the data acquisition system will be providing real-time data to control engine development system.

14.4.7 Facility Arrangements and Structures

Four facility arrangements are described; two site specific and two stand-alone facilities. For the purposes of illustration and assuming that the metal fuel development program continues to be successful, the site specific arrangements for the two heat dump options were developed for the DOE INEL site, adjacent to EBR-II, in such a manner as to make effective use of existing facilities and services. This includes fuel and liquid metal handling experience and equipment. These are not necessarily optimum arrangements but are considered sufficiently close to optimum, for the purpose of this study. The next two facility arrangements were developed as reference cases for generic, stand-alone facilities also based on the two heat dump options.

These four facility arrangements and associated structures are described in the next sections.

14.4.7.1 Facility Arrangements and Structures for Dump Steam Generator System

Overall Description

The test facility arrangement for the dump steam generator concept proposed for the EBR-II site is shown in Figure 14.4-25. This concept incorporates a standard PRISM module and a full-size PRISM steam generator system and associated steam generator building structure. The steam is piped to a condenser building where it is reduced in pressure, condensed, reheated and pumped back to the steam generator as feedwater. This condenser/feedwater building is considerably smaller than the commercial PRISM plant turbine building. Condenser cooling is achieved by a conventional cooling tower and associated circulating water system. Water makeup for the cooling tower will be provided by two 2000 gpm water wells. The nominal heat rejection capacity of the heat sink is 432 MWt (425 MWt reactor power plus 7 MWt pumping power).

The following structures and buildings shown on the site plan given in Figure 14.4-25 are basically prototypical of the commercial PRISM plant design:

1. Reactor Building
2. Steam Generator Building
3. Nuclear Island Personnel Service Building (Includes Remote Shutdown Area)
4. Primary Sodium Processing Building
5. Control Building

Other structures and buildings shown on the site plan have been included to meet the operational requirements of the demonstration test facility not satisfied by the existing EBR-II site facilities and services. These structures and buildings are as follows:

1. Reactor Service Building
2. Cooling Tower and Circulating Water Pumphouse

3. Diesel Generator Building
4. Fuel Oil Storage Tank
5. Radwaste Storage Building
6. Warehouse
7. Auxiliary Boiler Building
8. Water Treatment Building
9. Na Receiving and Handling Station
10. Equipment Receiving and Assembly Area
11. Administration Complex (Temporary Modular Structures)

The following EBR-II facilities and services can be shared by the PRISM safety test facility and have not been included:

1. Radwaste Processing
2. Maintenance Building
3. Fire Water System
4. Water Storage Tanks
5. 115 kW Electrical Station
6. Na Receiving and Handling Equipment
7. Waste Water Treatment and Holding Basin
8. Sewage Treatment Plant
9. Percolation Ponds
10. Security Building and Guardhouse
11. Cafeteria

Major Structures

This section contains brief descriptions of test facility major structures to the extend they are either the same or different from the standard PRISM design.

(A) Reactor Building

This building is identical to a standard PRISM reactor silo and adjacent structures, including a primary sodium processing building.

(B) Steam Generator Building

This building is identical to a standard PRISM steam generation silo, its adjacent structures, and the reactor-to-steam generator building interconnecting tunnel.

(C) Condenser and Feedwater Building

This is a structural steel frame, steel-sided building about 100 ft long, 60 ft wide, and 45 ft high. This structure houses the pressure reducing valves, steam condenser, condensate system, feedwater heaters, and feedwater pumps, and miscellaneous support equipment.

(D) Nuclear Island Personnel Service Building

This building is similar to the standard PRISM structure except that one story has been eliminated since the maintenance function will be provided by existing facilities.

(E) Reactor Service Building

This building is similar to the standard PRISM reactor service building and provides for temporary storage of new, reprocessed and spent fuel.

(F) Control Building

This building is similar to the standard PRISM control building.

(G) Radwaste Storage Building

This building is a reinforced concrete structure about 100 ft long, 80 ft wide, and 20 ft high, constructed at grade level. The building is used to house liquid and solid radwaste prior to pick up by the host site services. The structure is designed as a Seismic Category I structure to the extend required to retain all the stored liquid in the event of equipment failures.

(H) Administration Complex

The administration complex is an assembly of modular office structures. This type of office space, conference rooms, etc. was chosen as a cost saving feature because of the anticipated limited

duration of the test facility operations. It was estimated that an assemblage of 26 12x60-foot modules would be required.

(I) Cooling Tower and Circulating Water Pump House
The cooling tower is designed to remove the total of the heat facility load and is a conventional wood wet mechanical draft cooling tower. Associated with the cooling tower is a circulating water pumphouse which contains the circulating water system equipment. This building is a 2500 sq ft reinforced concrete structure.

14.4.7.2 Facility Arrangement and Structures for Dump Heat.Exchanger

Overall Description

The facility arrangement for the air dump heat exchanger concept adjacent to EBR-II is shown in Figure 14.4-26. In this concept, the PRISM prototypical steam generator is replaced with an intermediate sodium pumphouse where the sodium is directed to the air dump heat exchangers (DHX).

The following structures and buildings are basically prototypical of the commercial PRISM plant design:

1. Reactor building
2. Nuclear island personnel service building (Includes Remote Shutdown Area)
3. Primary sodium processing building
4. Control building

Other structures and buildings shown on the site plan have been included to meet the operational requirements of the safety test facility not covered by the existing EBR-II site facilities and services. These structures and buildings are as follows:

1. Reactor service building
2. Intermediate sodium pump house

3. Fuel oil storage tank
4. Radwaste storage building
5. Warehouse
6. Inert gas storage area
7. Na receiving and handling station
8. Equipment receiving and assembly area
9. Administrative complex (temporary modular structures)
10. Security buildings and guardhouse.

The EBR-II site facilities and services that are shared by the PRISM test facility for the dump heat exchanger system are the same as for the dump steam generator system except the water system for the DHX system option is shared with EBR-II.

Major Structures

This section contains brief descriptions of the test facility major structures only to the extent they are the same or different from the standard PRISM design.

(A) Reactor Building
This building is identical to a standard PRISM reactor silo and adjacent structures including a primary sodium processing building.

(B) Intermediate Sodium Pump House
This building houses the three intermediate pumps, DHX loop isolation valves, the IHTS/DHX loop headers, and the main IHTS sodium expansion tank and auxiliary equipment.

The building is partially below grade (reinforced concrete) with a steel sided structural steel framed portion above grade and includes the below grade tunnel for the IHTS main loop piping. The main portion of the structure is about 80 ft. long, 60 ft. wide and 60 ft. high.

(C) Nuclear Island Personnel Service Building

This building is similar to the standard PRISM structure except that one story has been eliminated since the maintenance function will be provided by existing facilities.

(D) Reactor Service Building

This building is similar to the standard PRISM reactor service building and provides for storage of new, reprocessed and spent fuel.

(E) Control Building

This building is similar to the standard PRISM control building.

(F) Radwaste Storage Building

This building is a reinforced concrete structure about 100 ft. long, 80 ft. wide and 20 ft. high constructed at grade level. The building is used to house liquid and solid radwaste prior to pick up by the host site services. The structure is designed as a Seismic Category I building to the extent required to retain all the stored liquid in the event of equipment failures.

(G) Administration Complex

The administration complex is an assembly of modular office structures. This type of office space, conference rooms, etc., was chosen as a cost saving feature because of the anticipated limited duration of the test facility operations. It was estimated that an assemblage of 26-12 x 60' modules would be required.

(H) Air Dump Heat Exchangers

There are twelve sodium to air heat exchangers divided into three groups, each with a supporting structure, interconnecting piping, valves and the supporting systems and equipment. Each heat exchanger is equipped with a forced draft fan, control louvers and an oil heating system. These heat exchangers are similar to those in use at the FFTF facility but have an increased thermal capacity.

REFERENCES - Section 14.4

14.4-1 "PRISM Safety test Progress Report," GEFR-00780, July 1986, Nuclear Systems Technology Operation, General Electric Company

Table 14.4-1

PRELIMINARY HEAT TRANSPORT SYSTEM DESIGN VALUES

PARAMETER DESCRIPTION	VALUE
Reactor thermal power (MWt)	425
Reactor outlet temperature (°F)	875
Reactor inlet temperature (°F)	610
Reactor ΔT (°F)	265
Primary core flow, total (lbm/h)	16,000,000
Primary pump discharge flow (gpm)	10,500(1)
Primary pump head (ft)	316
Intermediate hot leg temperature (°F)	800
IHX intermediate inlet temperature (°F)	540
Intermediate flow, total (lbm/h)	18,000,000
Intermediate pump discharge flow (gpm)	41,000
Intermediate pump head (ft)	314
SG thermal power MWt	432(2)
SG steam outlet temperature (°F)	545
SG steam outlet pressure (psia)	1000
SG feedwater temperature (°F)	420
Steam flow (lb/h)	1,853,300

(1) Value is for one pump, for total reactor value is 42,000 gpm

(2) Core plus, primary and secondary pumps heat addition, plus SG recirculation pump (425 + 4.6 + 2.2 + 0.2)

TABLE 14.4-2

REACTOR TRIP PARAMETERS

FLUX:	Monitor for Insertion of Reactivity (Threshold Function of Operating Power Level	TRIP
FLOW:	Monitor for Loss of Flow	TRIP
TEMPERATURE:	Monitor for Loss of Heat Sink	TRIP
LEVEL:	Monitor for Loss of Sodium	TRIP
PRESSURE:	Monitor for EM Pump Outlet Duct Failure	TRIP

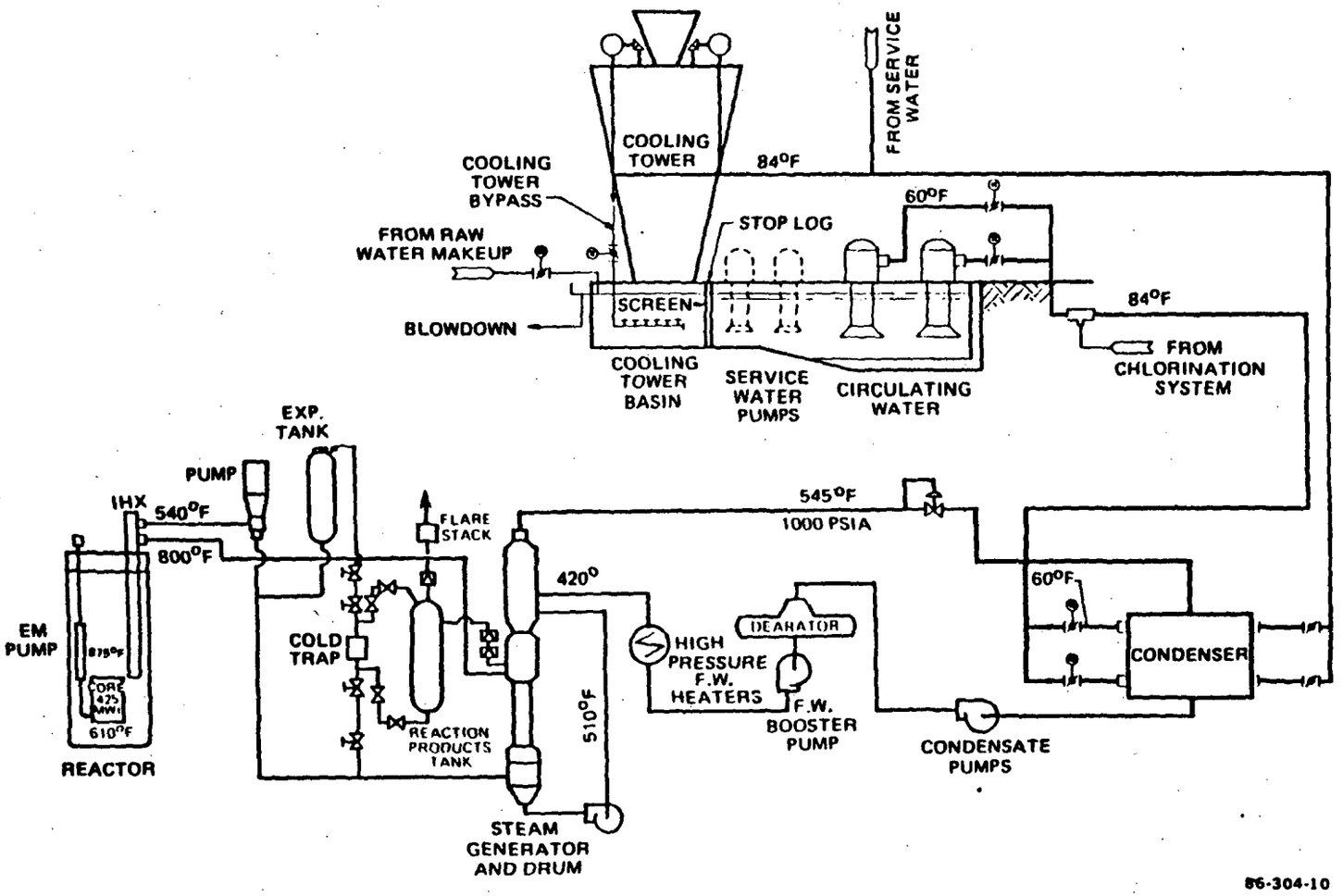

Figure 14.4–1 PRISM TEST DUMP STEAM GENERATOR SYSTEM DIAGRAM

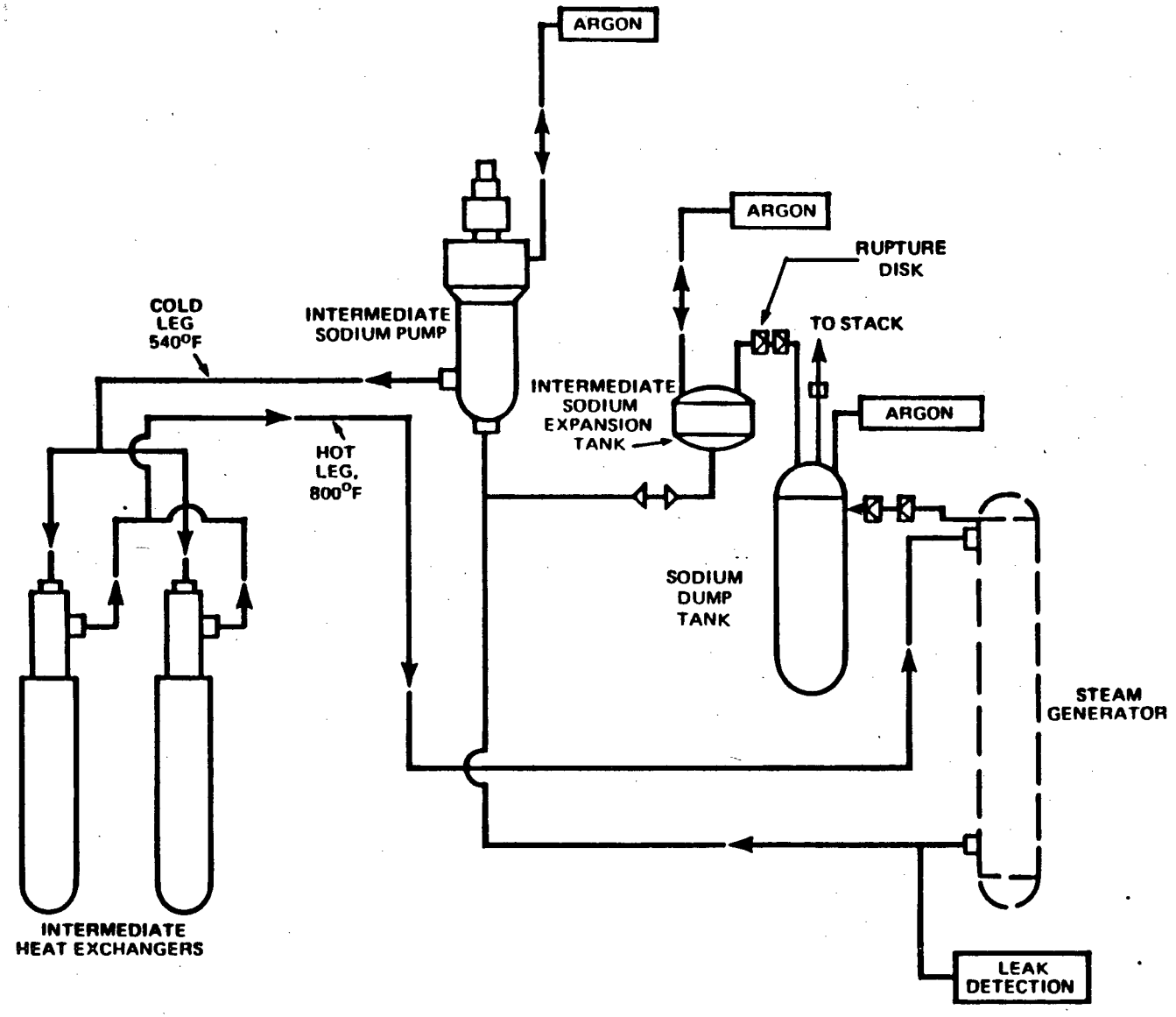

Figure 14.4–2 INTERMEDIATE HEAT TRANSPORT SYSTEM SCHEMATIC

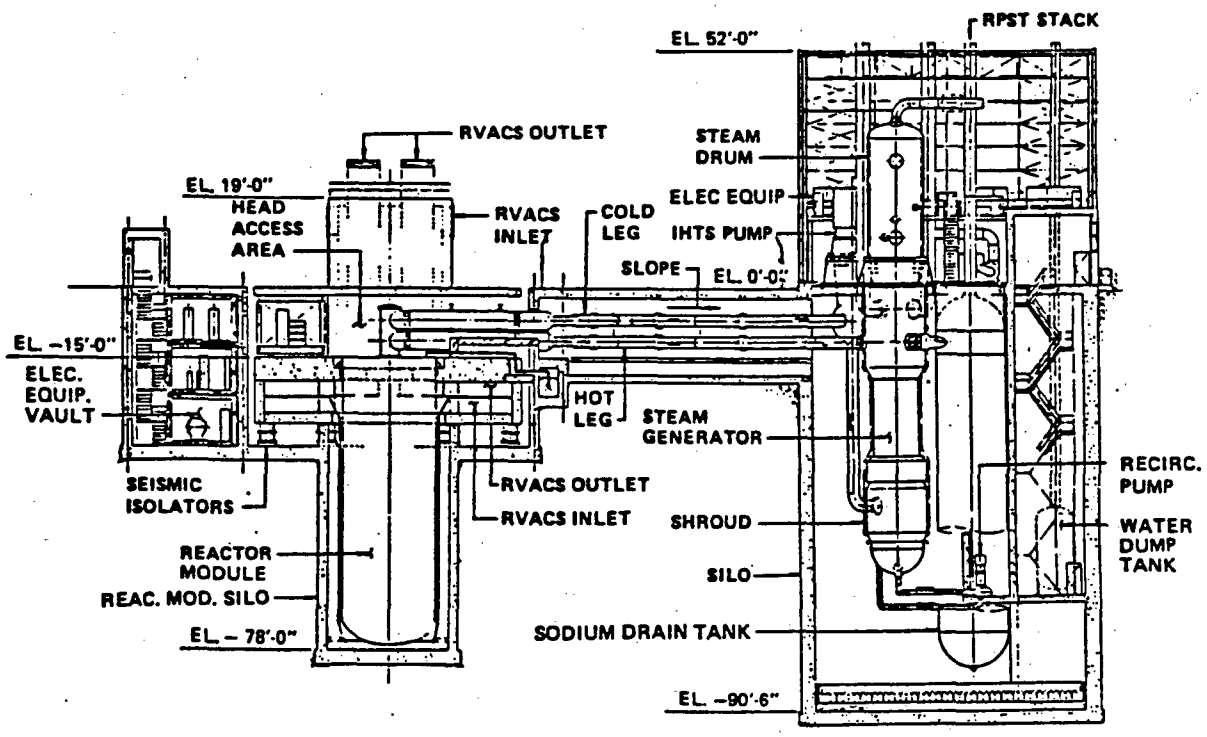

SECTION AA

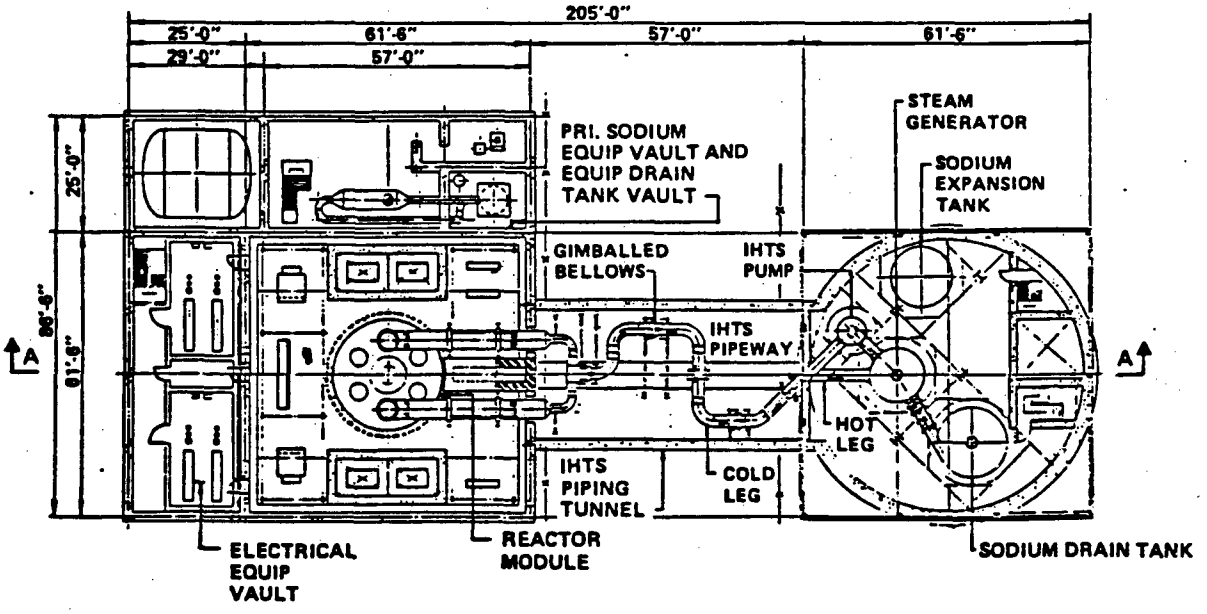

PLAN BELOW EL 0'-0"

Figure 14.4–3 IHTS COMPONENTS ARRANGEMENT FOR DUMP STEAM GENERATOR APPROACH

PUMP CHARACTERISTICS

FLOW	41,000 GPM
SODIUM TEMPERATURE	540°F
TOTAL HEAD	120 PSI
AVAILABLE NPSH	72 ft @ 540°F
REQUIRED NPSH	61 ft @ 540°F
PUMP SHAFT POWER	4000 HP
PUMP SPEED	1400 RPM
PUMP MATERIAL	304 AND 316 SST

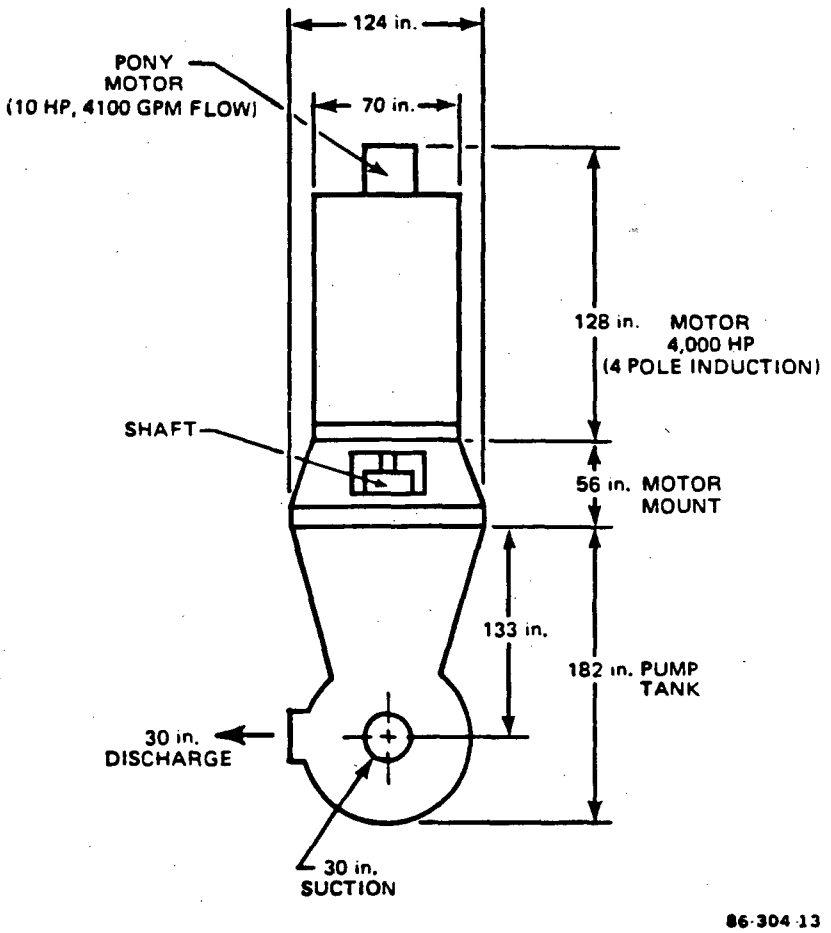

Figure 14.4–4 IHTS PUMP AND MOTOR

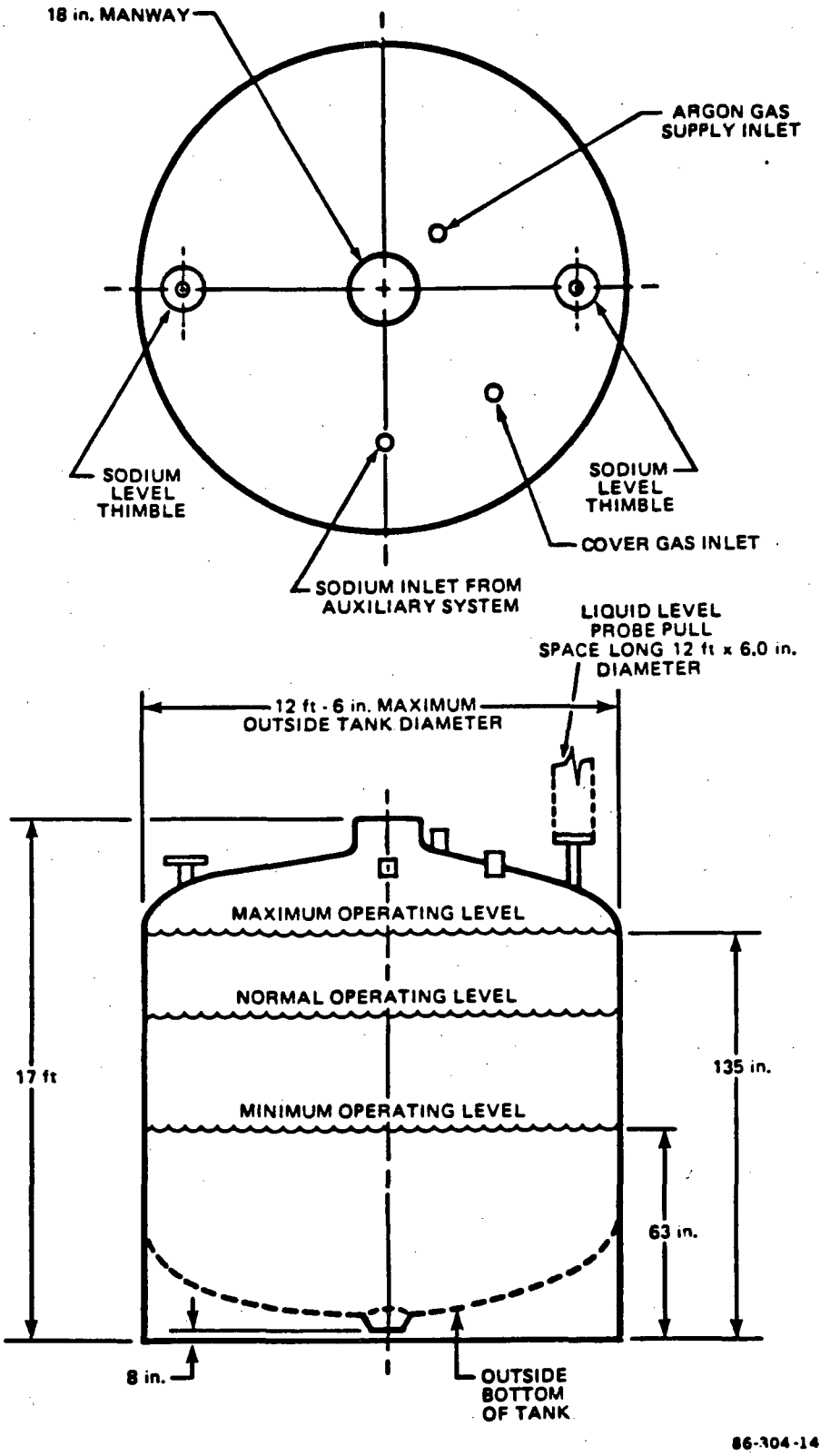

Figure 14.4–5 IHTS EXPANSION TANK

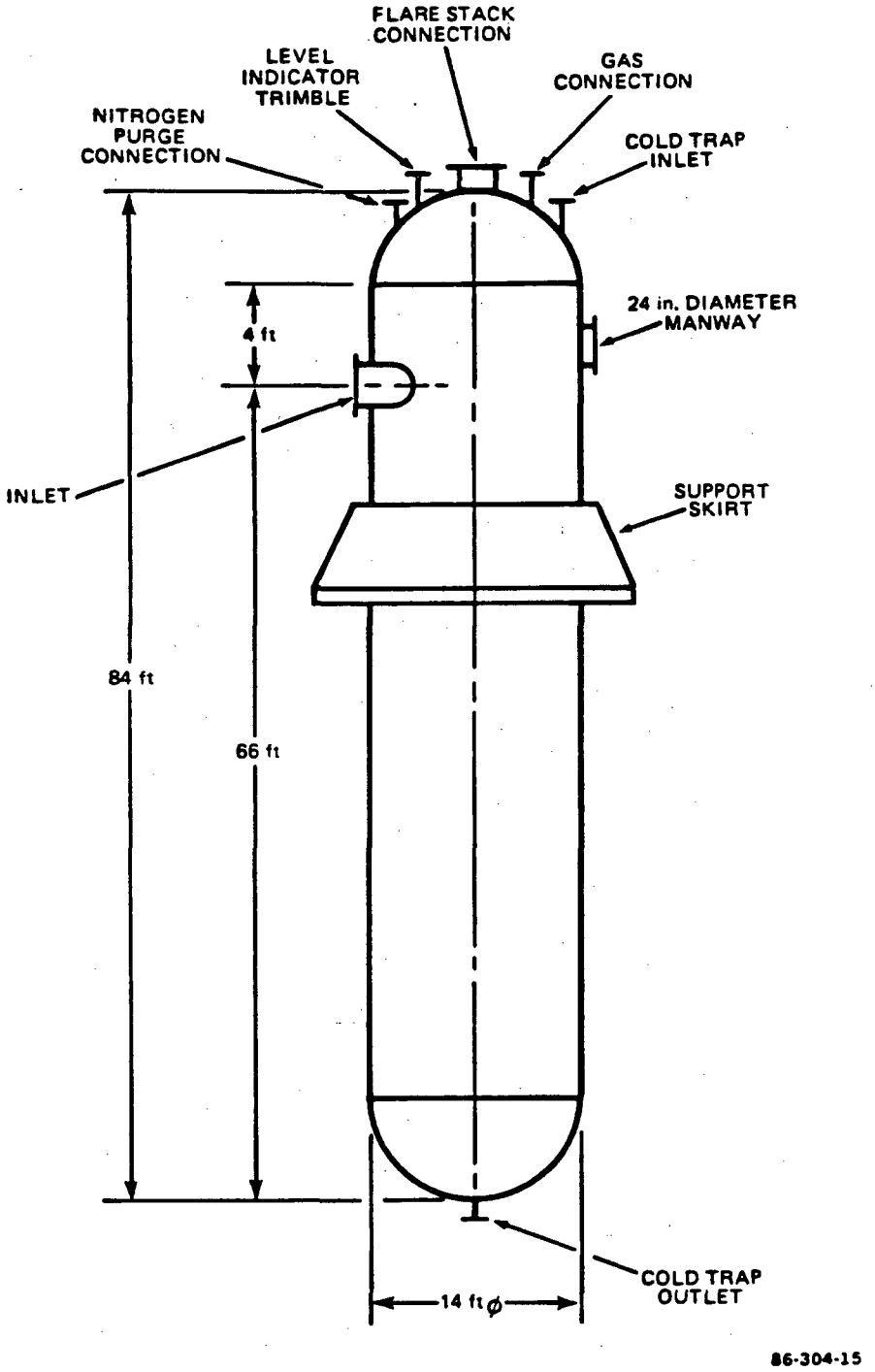

Figure 14.4–6 SODIUM DUMP TANK

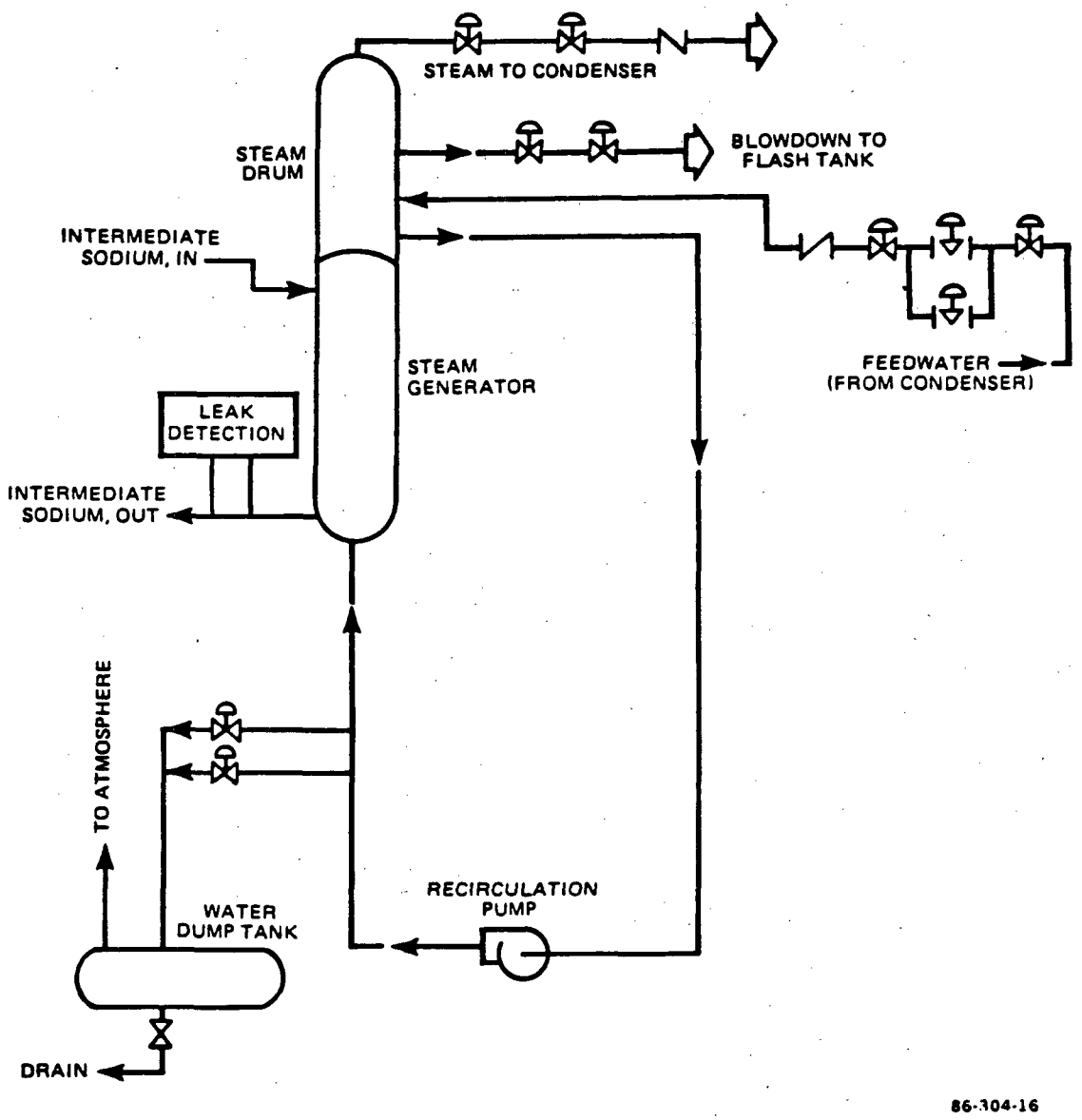

Figure 14.4–7 STEAM GENERATOR SYSTEM FLOW DIAGRAM

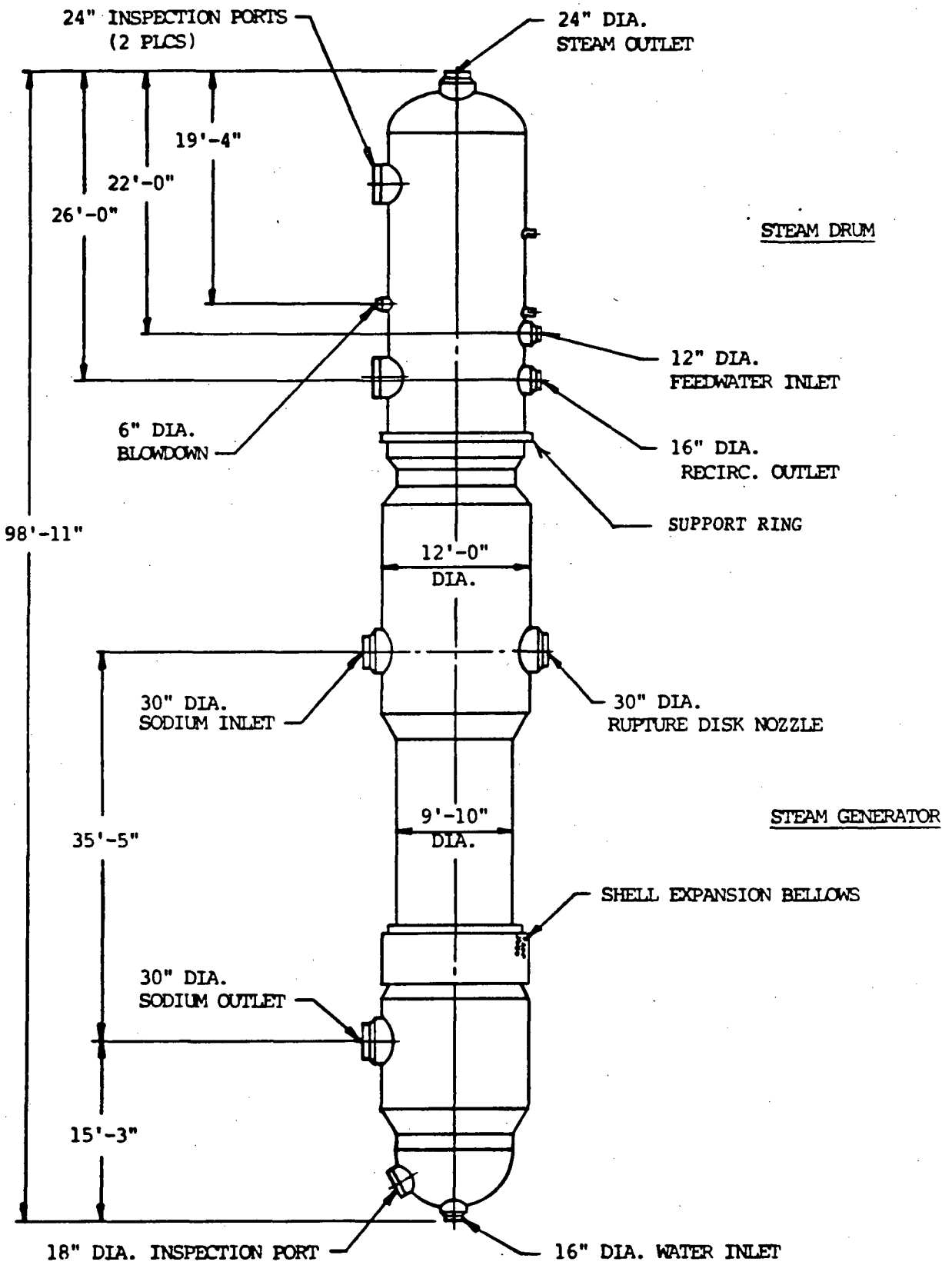

Figure 14.4–8 STEAM GENERATOR ARRANGEMENT

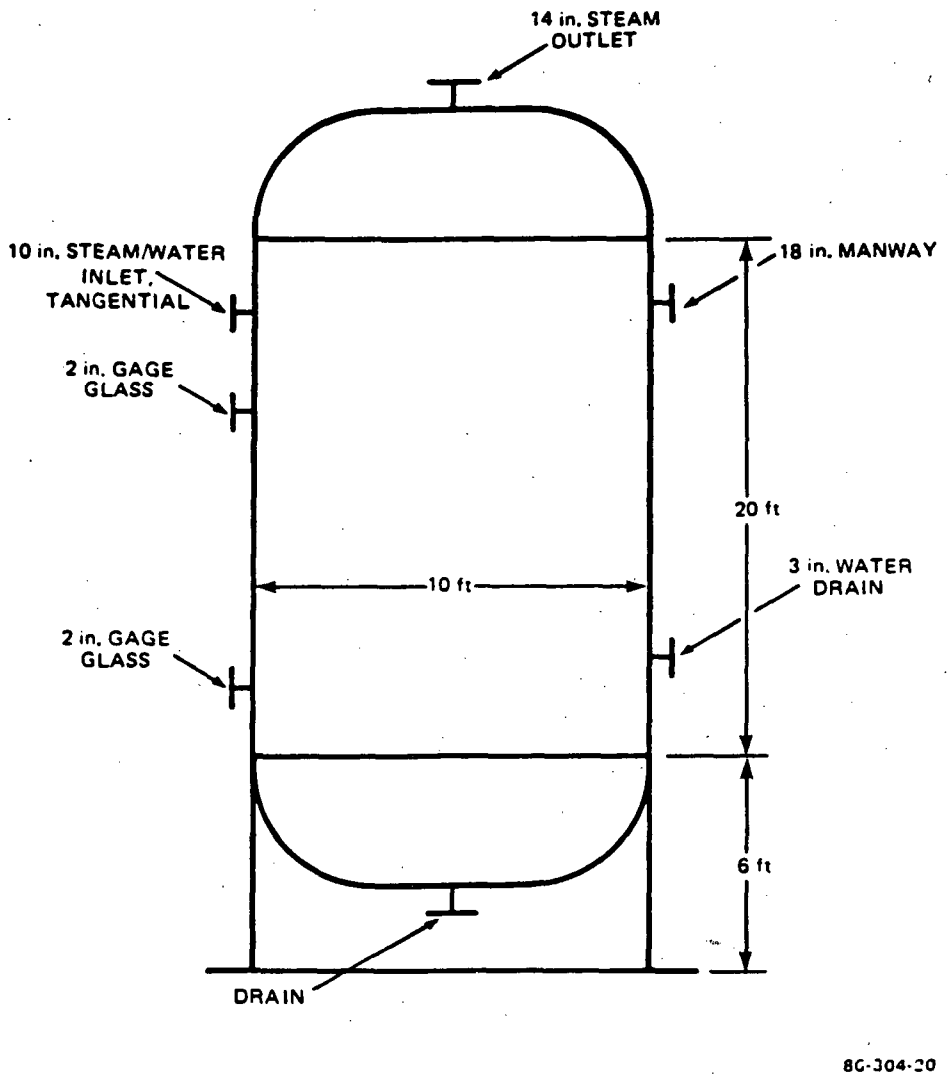

Figure 14.4–9 STEAM GENERATOR WATER DUMP TANK

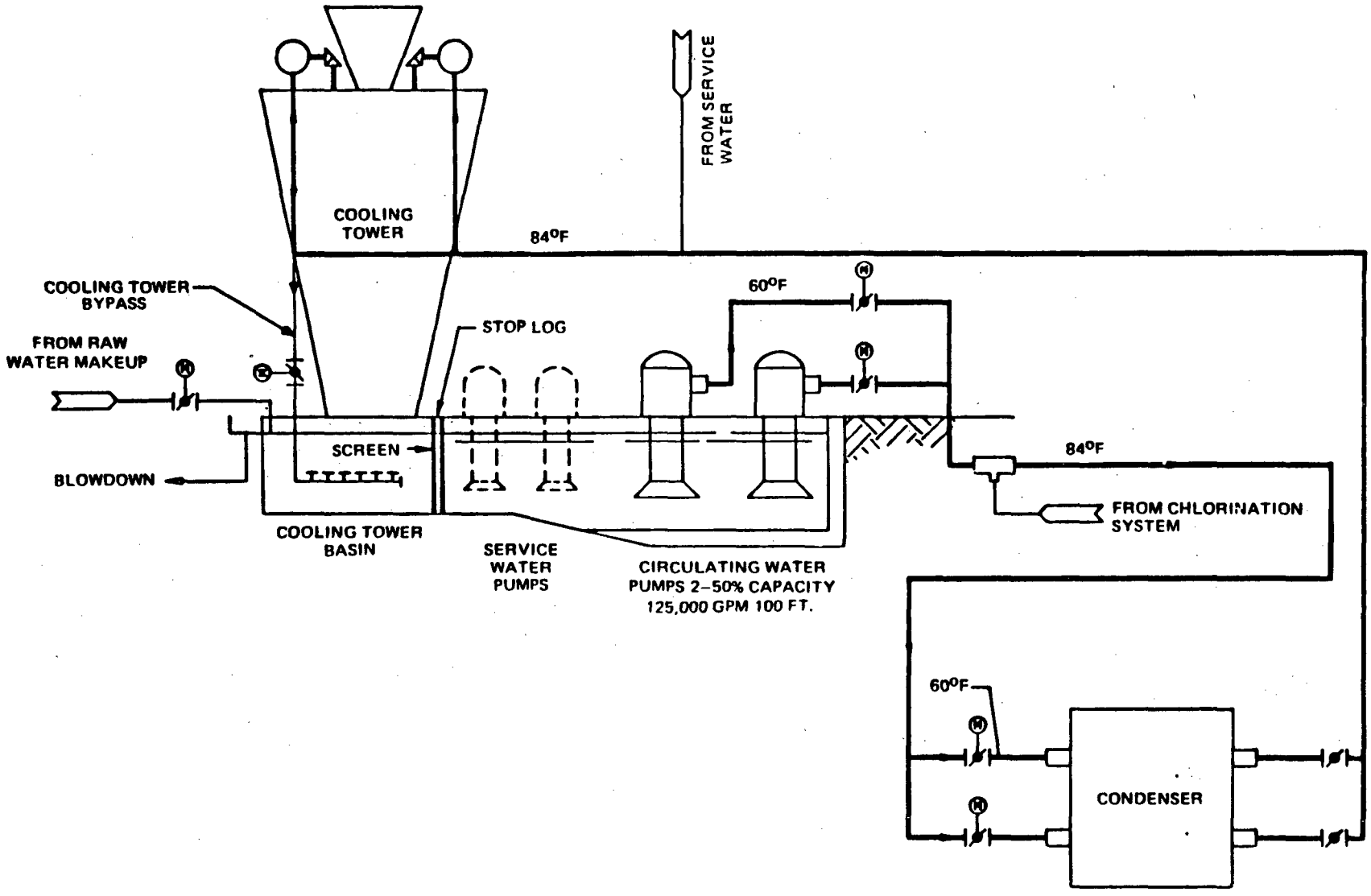

Figure 14.4–10 HEAT REJECTION SYSTEM FLOW DIAGRAM

86-304-21

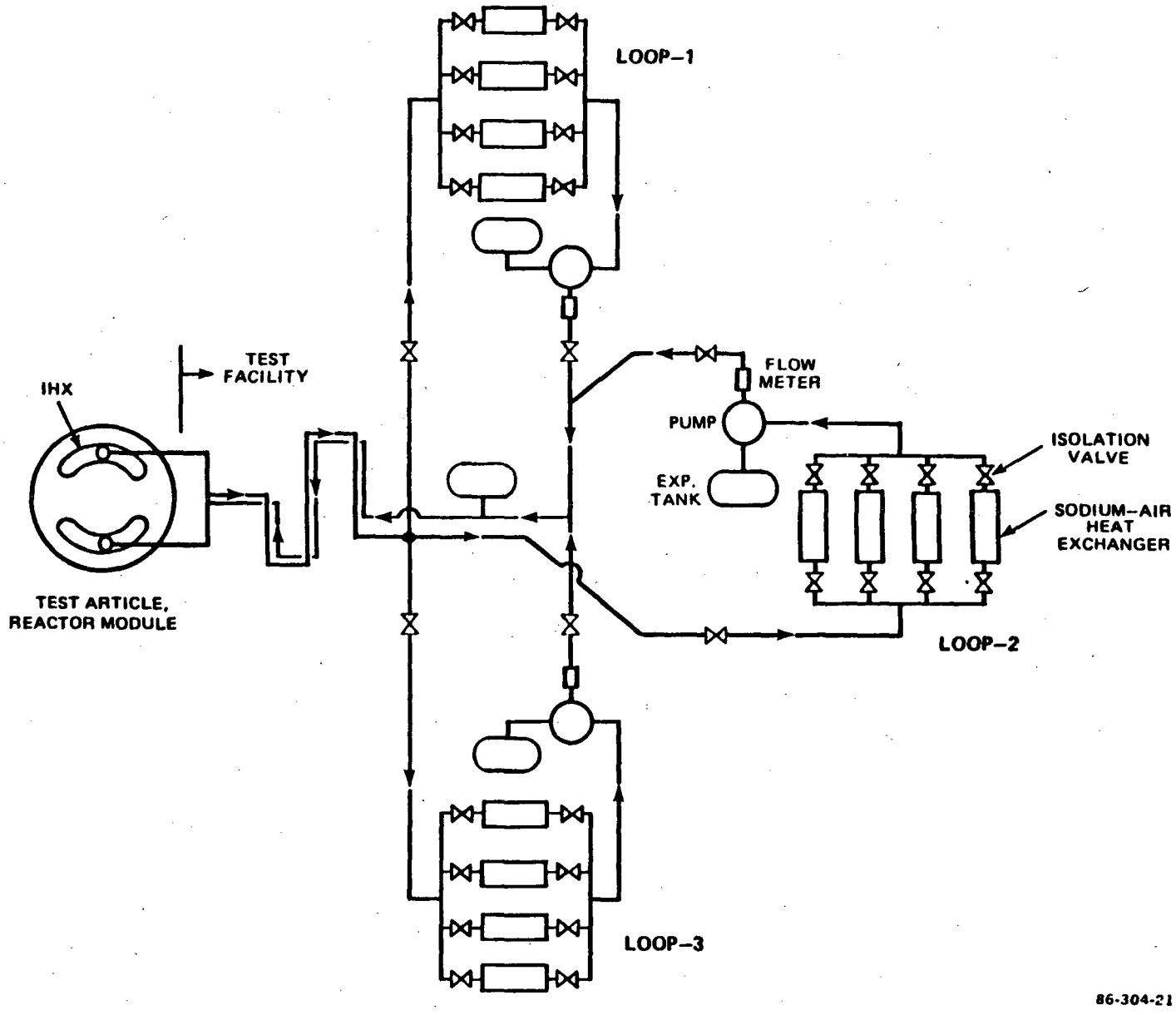

Figure 14.4–11 PRISM TEST DUMP HEAT EXCHANGER SYSTEM DIAGRAM

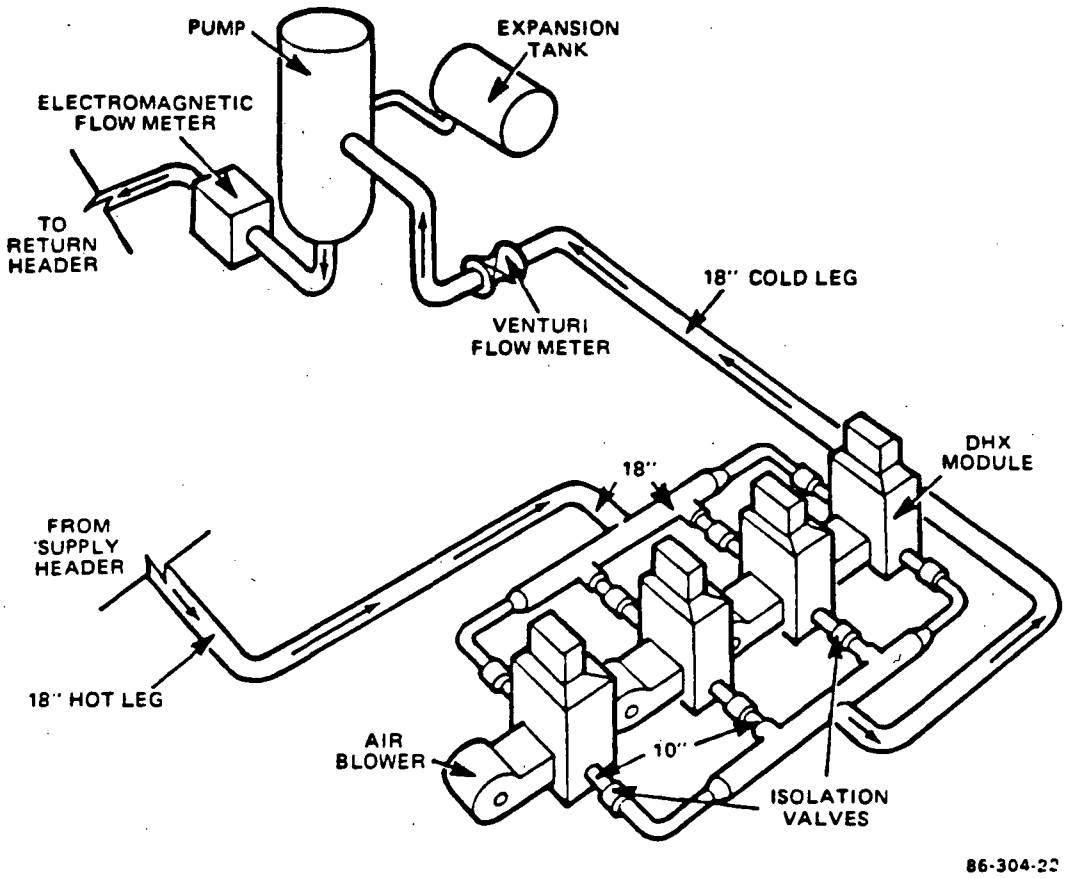

Figure 14.4–12 DUMP HEAT EXCHANGER LOOP SCHEMATIC

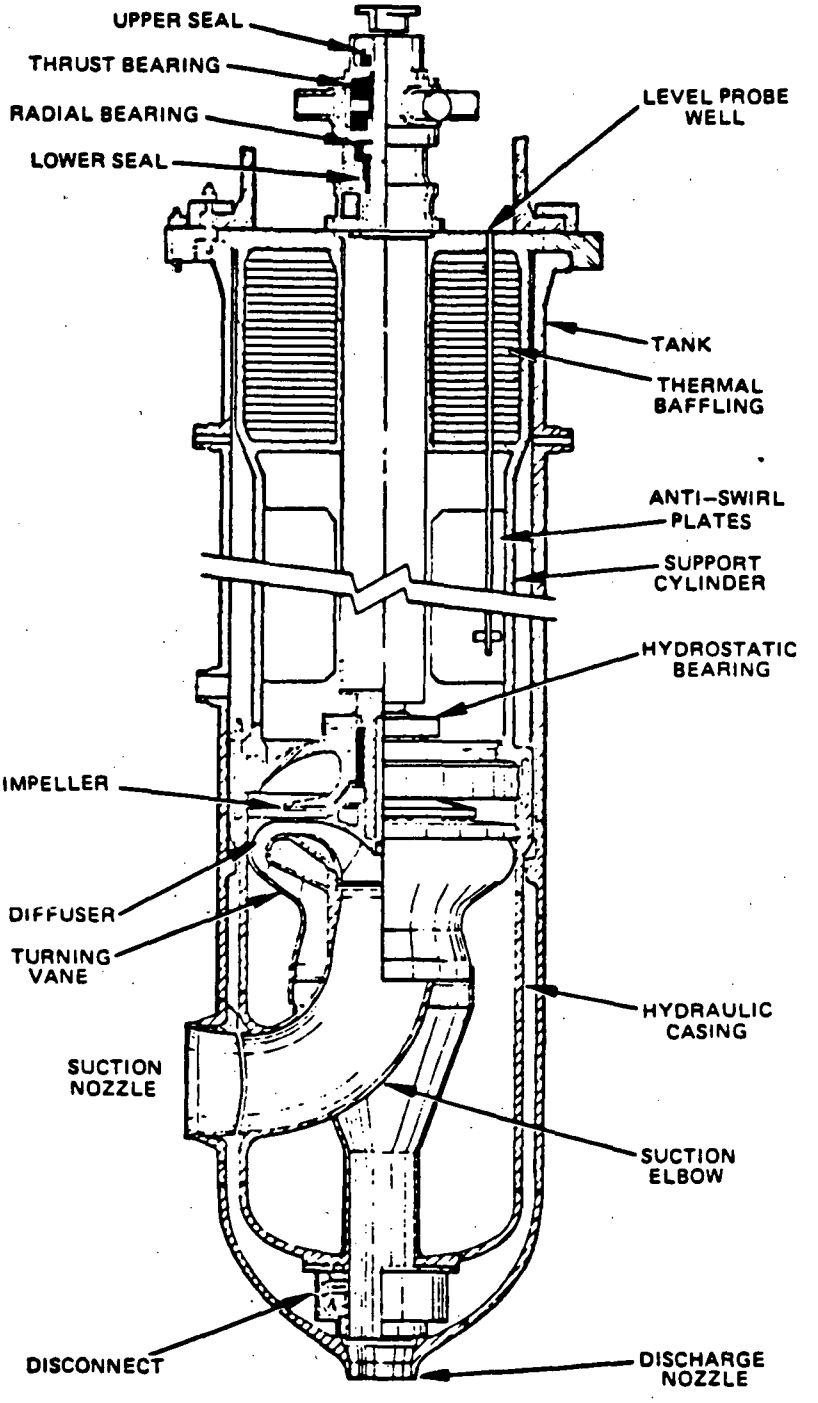

Figure 14.4–13 INTERMEDIATE SODIUM PUMP

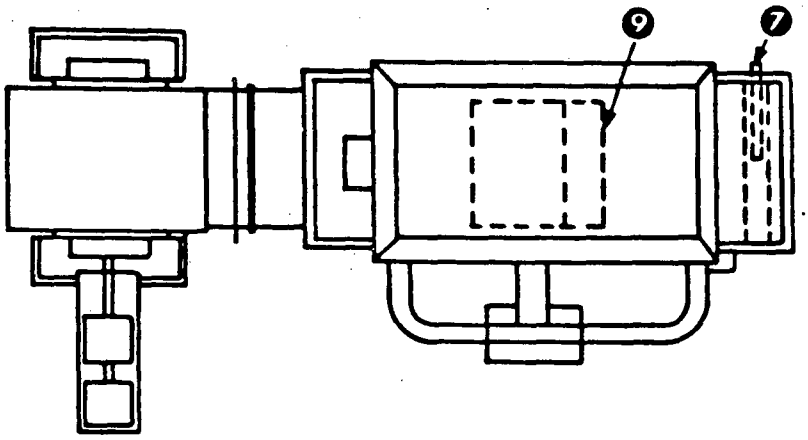

1 – FIN-TUBE BUNDLE AND HEADER ASSEMBLY
2 – FAN ASSEMBLY
3 – OUTLET AIR PLENUM AND DUCTING ASSEMBLY
4 – HEATING SYSTEM
5 – STACK
6 – OUTLET DAMPERS
7 – SODIUM INLET AND OUTLET
8 – BYPASS DUCT
9 – SODIUM CATCH BASIN

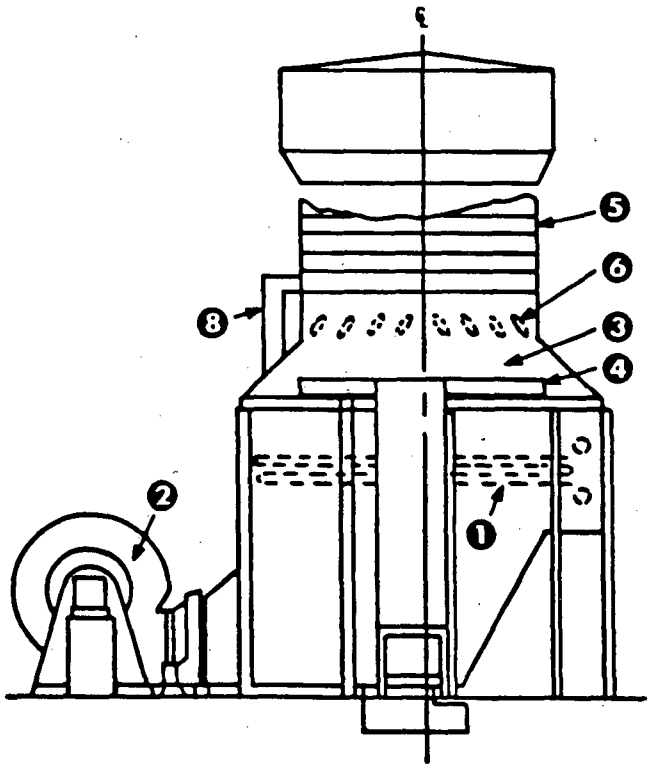

86-304-25

Figure 14.4–14 DUMP HEAT EXCHANGER

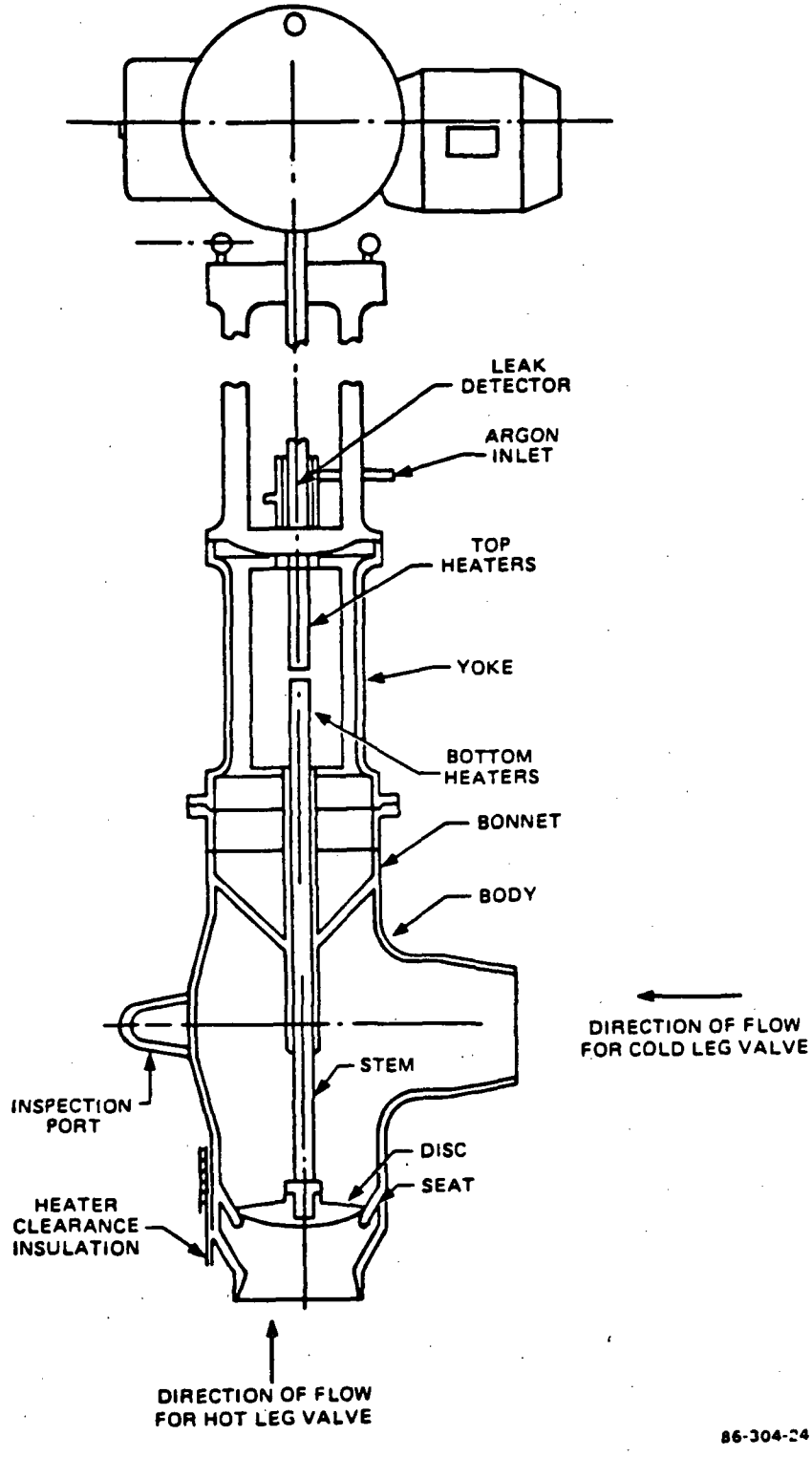

Figure 14.4–15 DHX ISOLATION VALVE

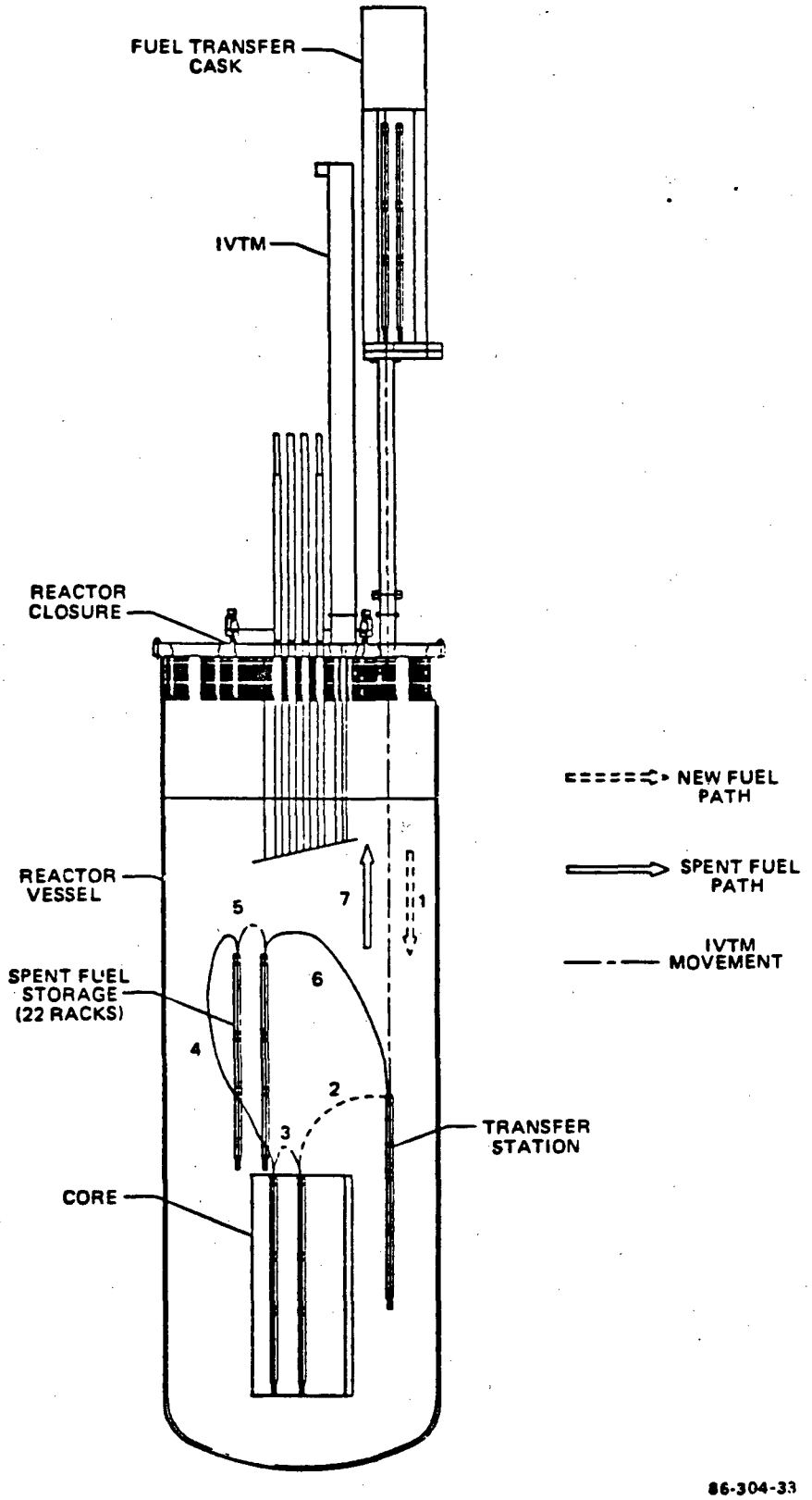

Figure 14.4–16 FUEL HANDLING PATH WITHIN REACTOR

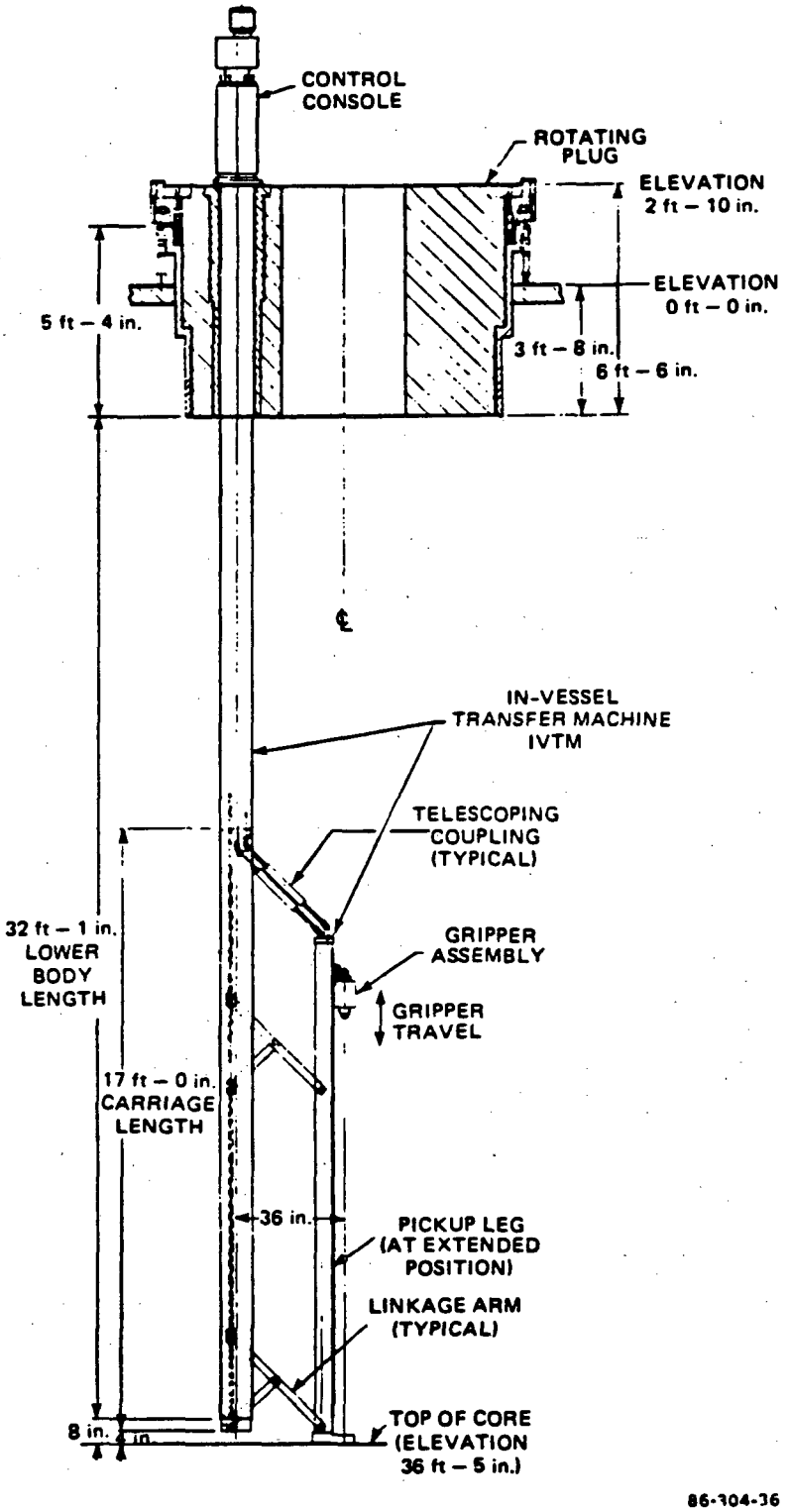

Figure 14.4–17 IN-VESSEL TRANSFER MACHINE

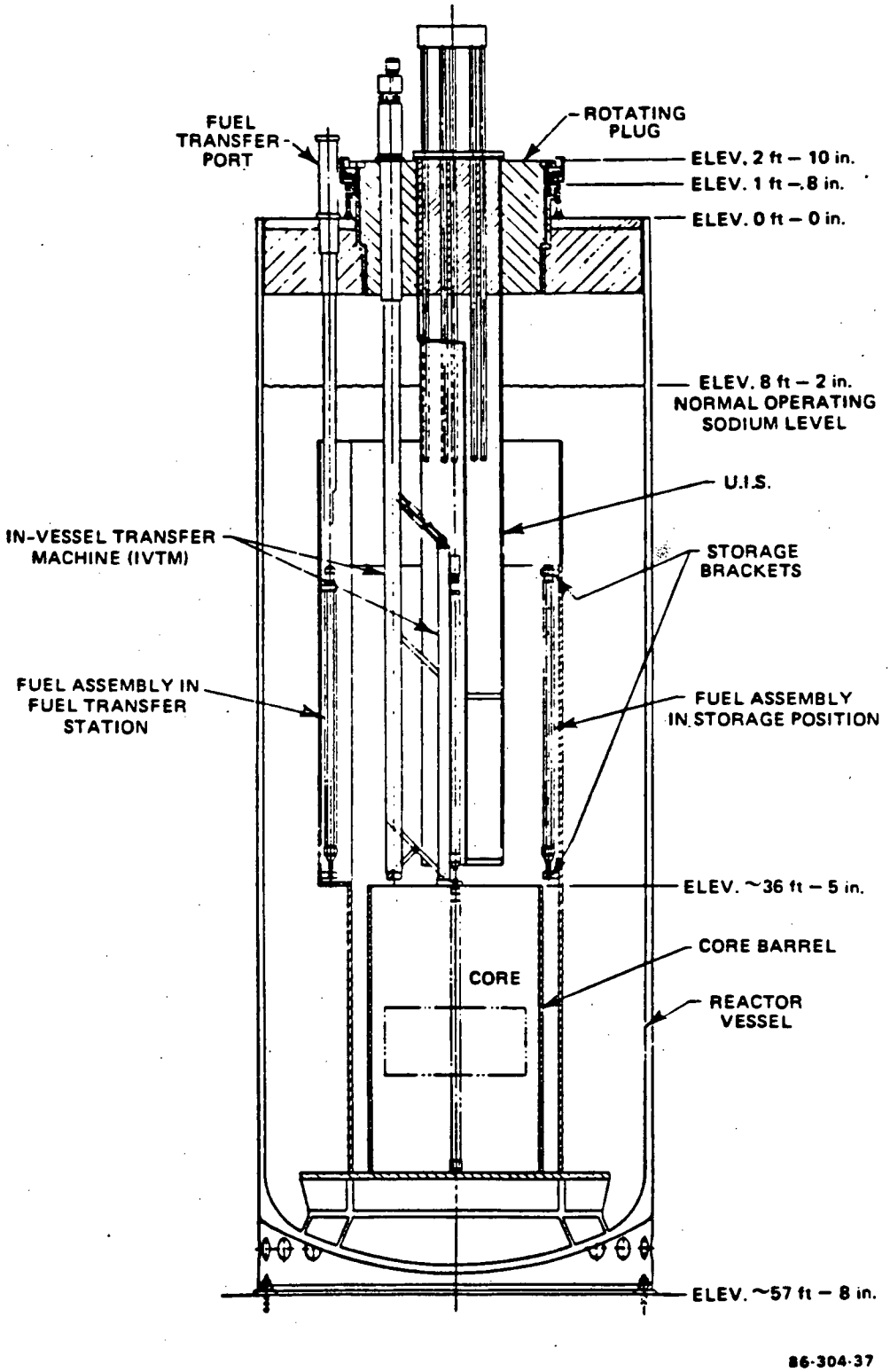

Figure 14.4–18 REACTOR REFUELING ARRANGEMENT

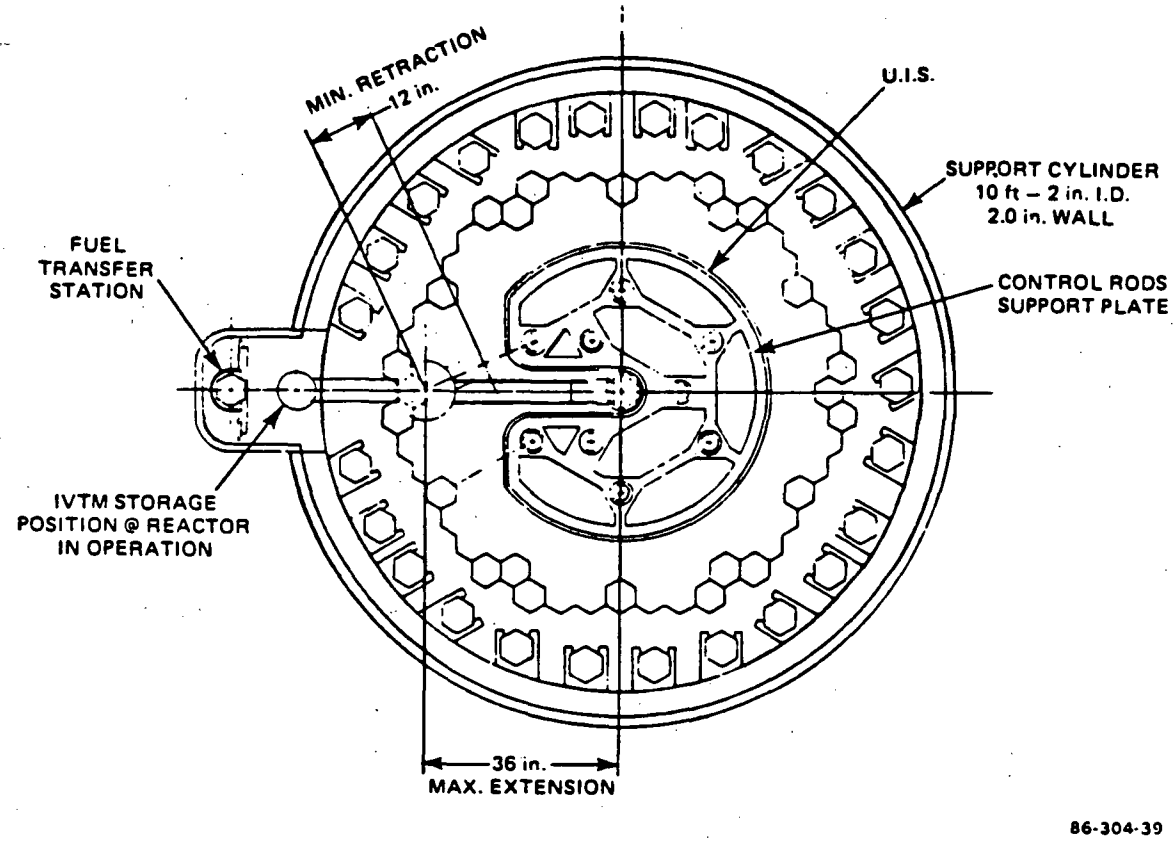

Figure 14.4–19 REFUELING FEATURES – PLAN VIEW SECTION

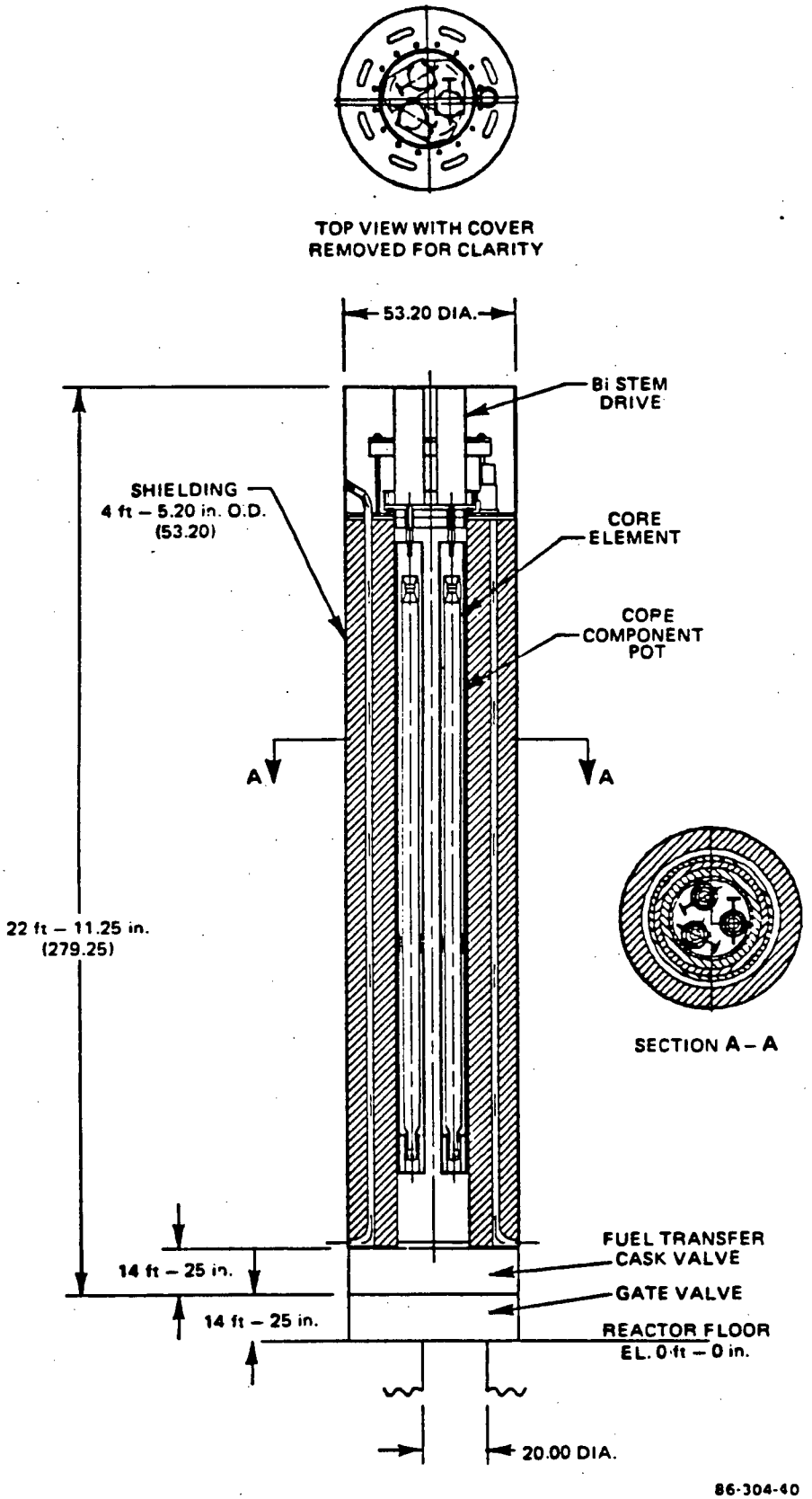

Figure 14.4–20 FUEL TRANSFER CASK

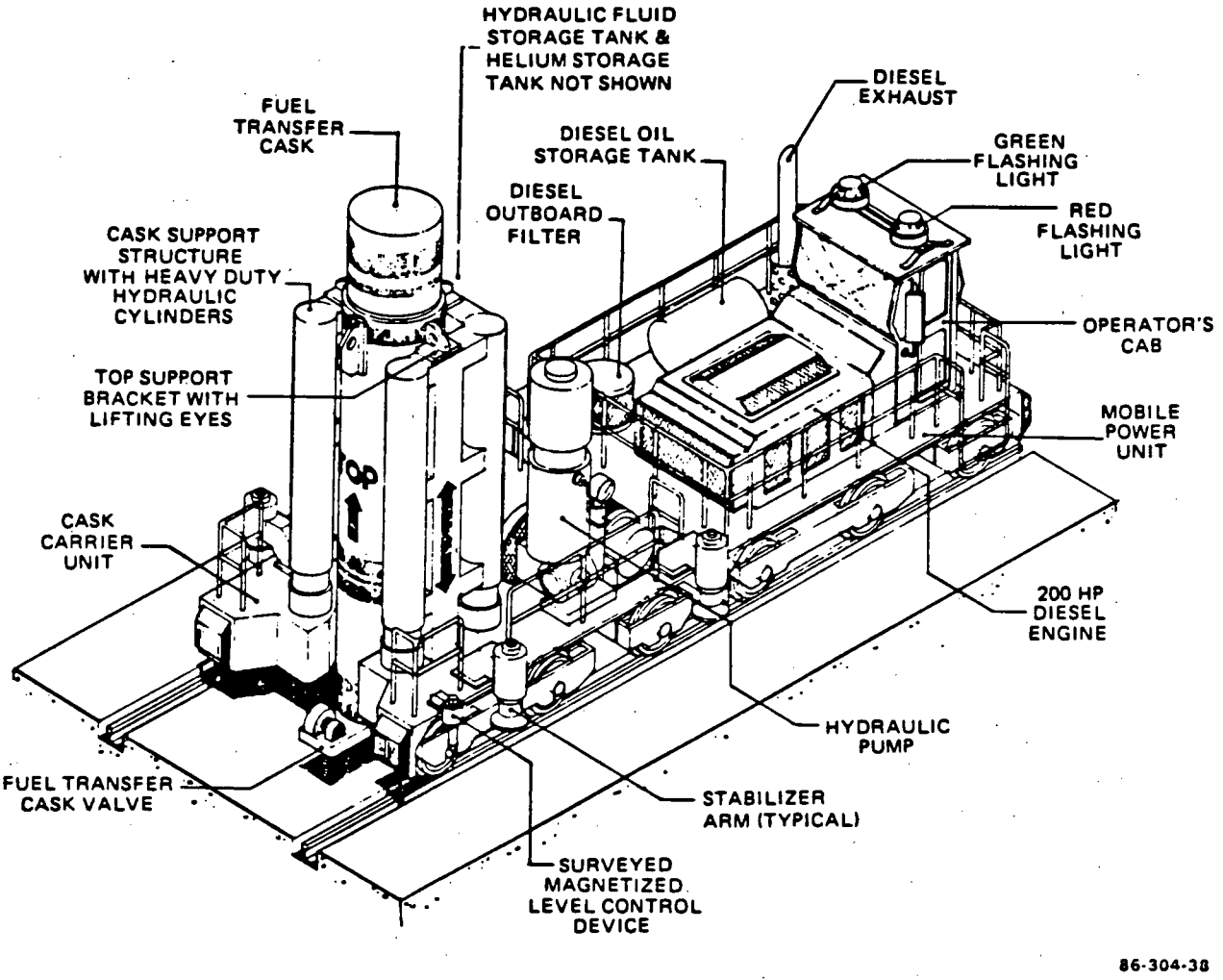

Figure 14.4–21 CASK TRANSPORTER ILLUSTRATION

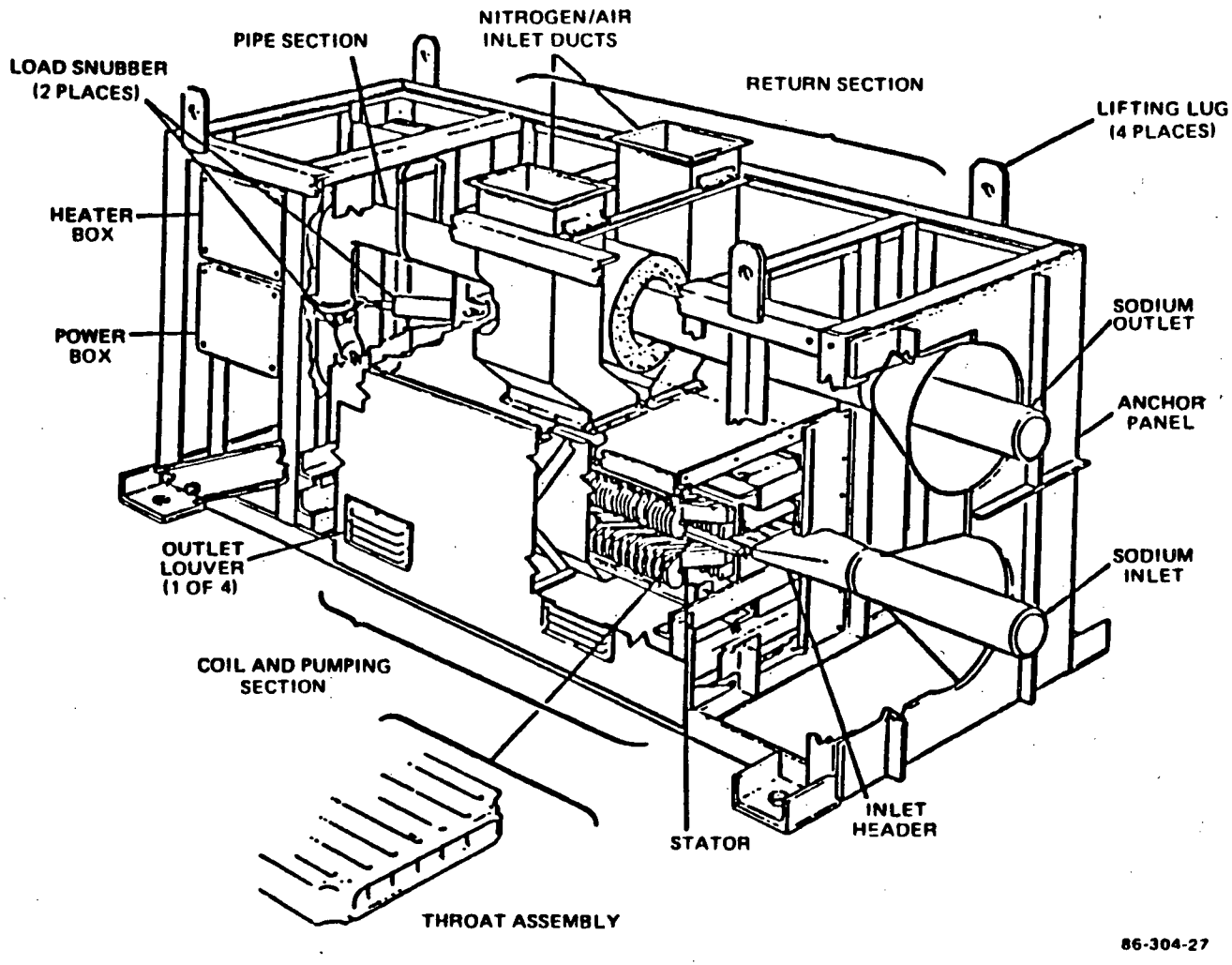

Figure 14.4–22 SODIUM EM PUMP MODULE

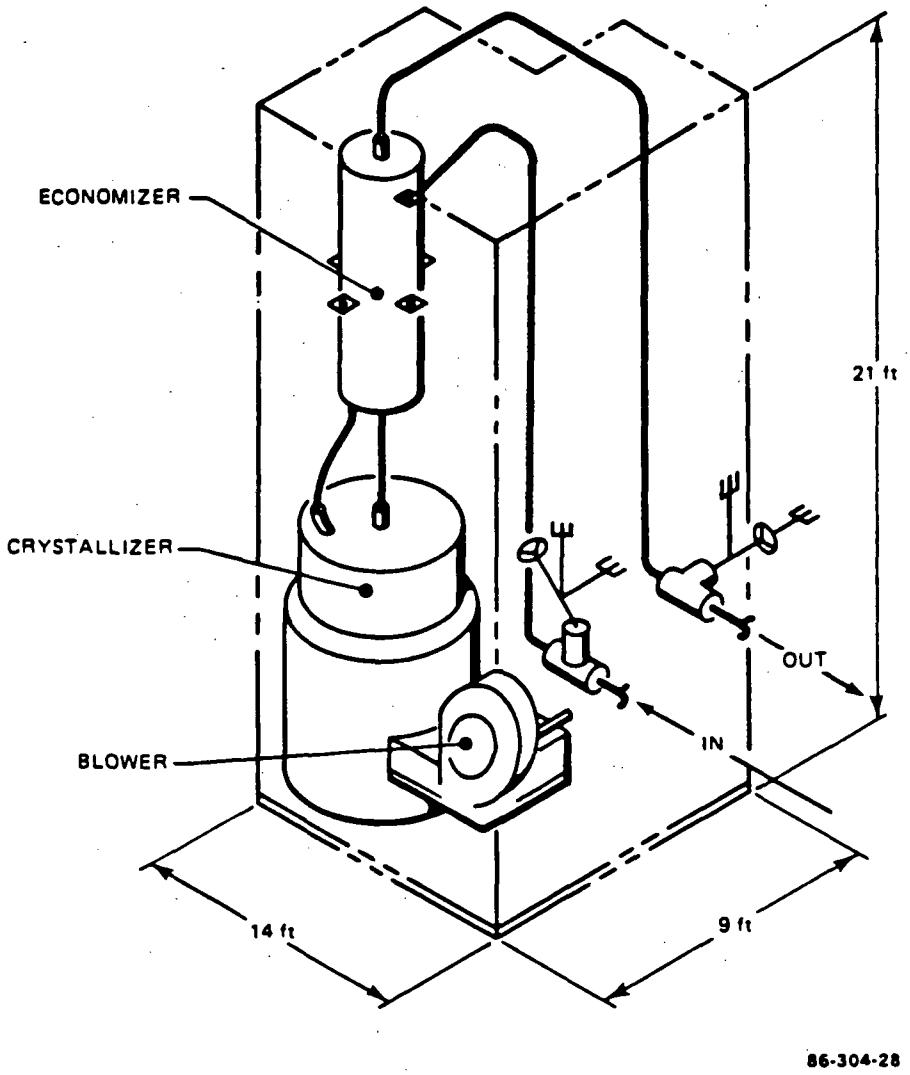

Figure 14.4–23 SODIUM COLD TRAP MODULE

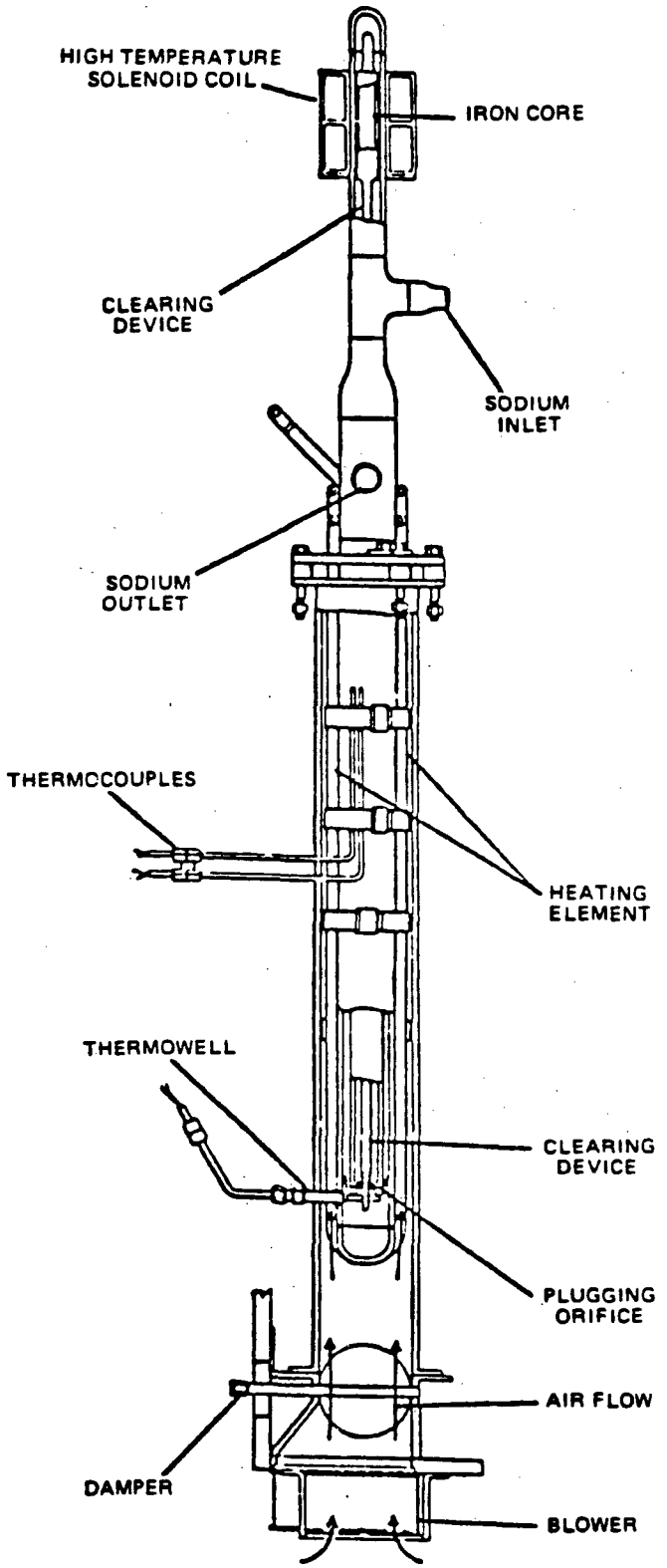

86 304 29

Figure 14.4–24 PLUGGING TEMPERATURE INDICATOR

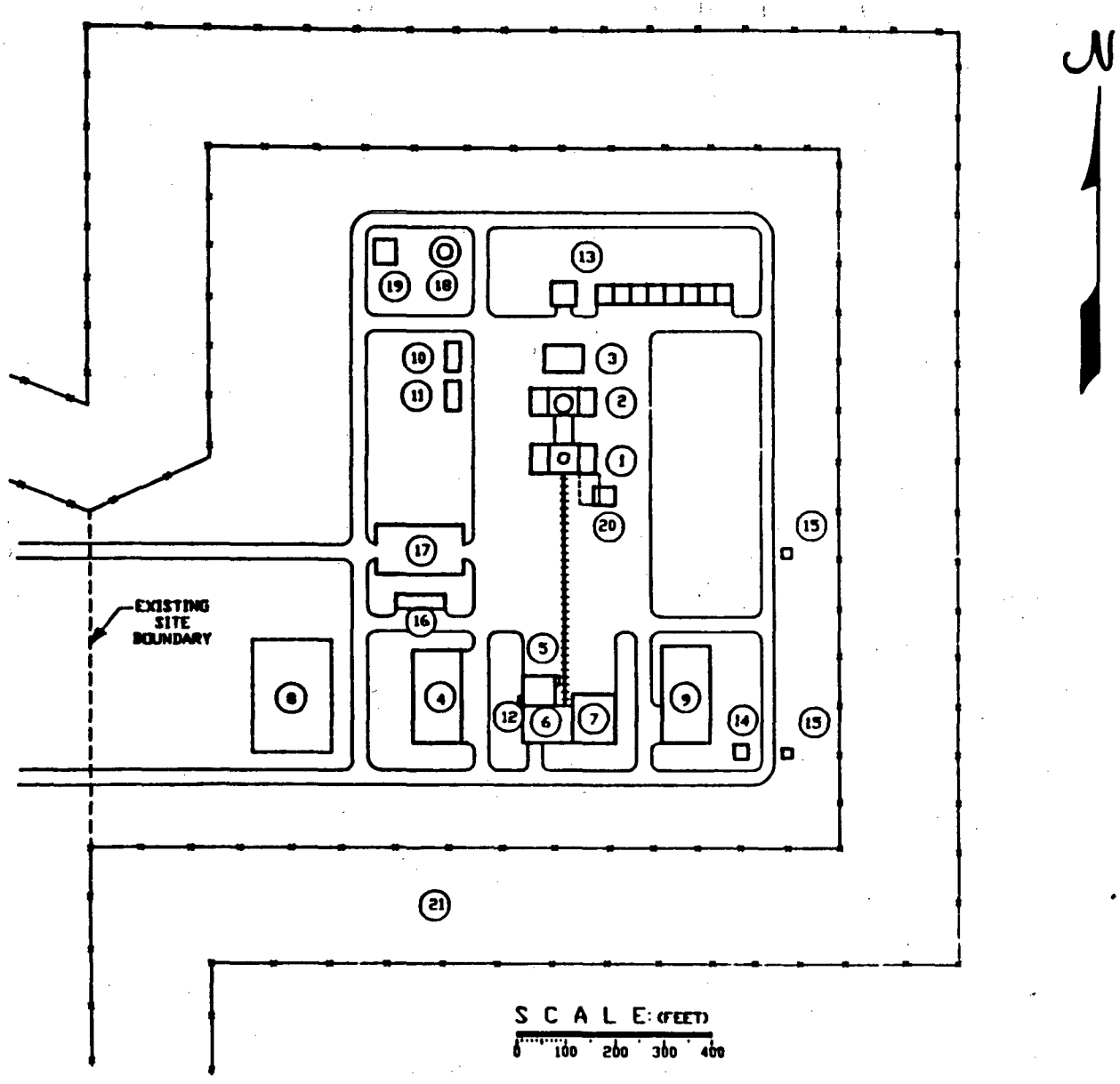

LEGEND

1. REACTOR BUILDING
2. STEAM GENERATOR BLDG.
3. CONDENSER/FEEDWATER BLDG.
4. CONTROL BLDG.
5. N.I. PERS. SERV. BLDG.
6. REACTOR SERVICE BLDG.
7. RADWASTE STORAGE BLDG.
8. ADMINISTRATION COMPLEX
9. WAREHOUSE
10. AUXILIARY BOILER BLDG.
11. WATER TREATMENT BLDG.
12. REMOTE SHUTDOWN AREA
13. COOLING TOWER/CIRC. WATER HOUSE
14. INERT GAS STORAGE AREA
15. WATER SUPPLY WELLS (2)
16. Na RECEIVING & HANDLING STATION
17. RECEIVING & ASSEMBLY AREA
18. FUEL OIL STORAGE TANK
19. DIESEL GENERATOR BLDG.
20. PRI. SOD. PROCESSING BLDG.
21. PROTECTED AREA CORRIDOR

86-304-45

Figure 14.4–25 PRISM TEST FACILITY WITH DUMP STEAM GENERATOR SYSTEM LOCATED ON INEL/EBR-II SITE

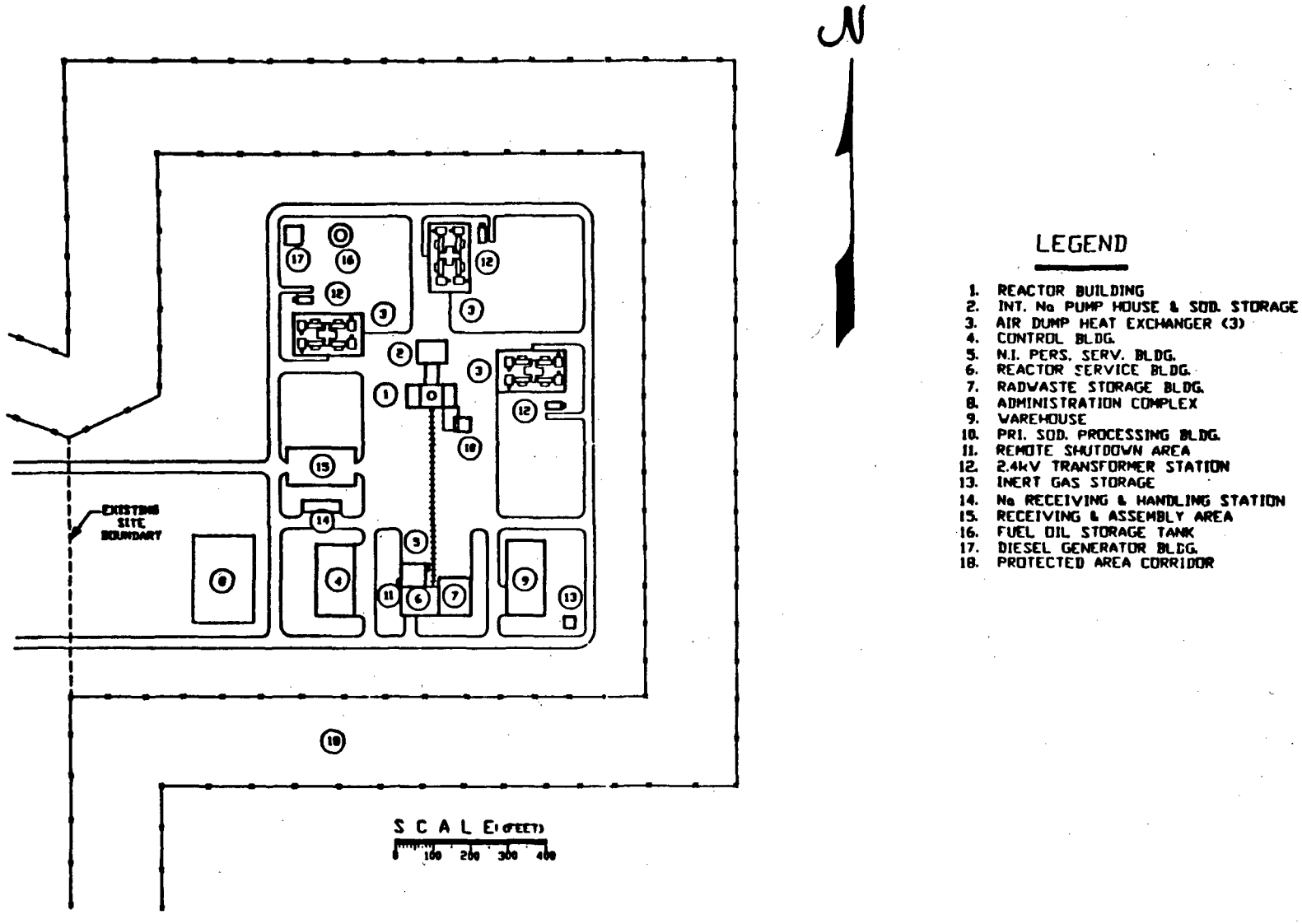

Figure 14.4–26 PRISM TEST FACILITY WITH DUMP HEAT EXCHANGER SYSTEM LOCATED ON INEL/EBR-II SITE

APPENDIX
14A

APPENDIX 14A

OTHER SAFETY TESTING SUPPORTING CERTIFICATION

TABLE OF CONTENTS

OTHER SAFETY TESTING SUPPORTING CERTIFICATION

1.0 Introduction

Several tests supporting PRISM certification have been identified that are better conducted outside the safety test itself. The following summarize the rationale for not including them in the PRISM safety test program:

1. Not cost effective and would be better performed separately.

2. Represents a potentially significant investment risk to the program.

3. Enhances program schedule.

2.0 Degraded RVACS Performance Testing

The PRISM safety design requirements requires that the air side of RVACS be designed for removal of reactor decay heat to protect the public's safety for the sodium fire and resulting aerosol event. Event D-5 of Appendix D is defined as the design basis for RVACS in which a leak in an IHTS pipe line results in a sodium fire with release of sodium aerosol that plates out on the RVACS heat transfer surfaces. For certification purposes, demonstration of RVACS inherent capability to remove reactor decay heat after exposure to and plate out of sodium aerosol would eliminate the sodium fire as a safety concern.

The primary sodium aerosol concern for PRISM stems from the potential effects of a sodium fire resulting from a leak in the IHTS piping. The IHTS in which the leak occurs can be the IHTS for the affected module, or in the case of a commercial application (multiple modules on a common site), an adjacent module. Two basic issues result from the sodium aerosol scenario:

1. The amount and concentration of sodium aerosol that is ingested by RVACS. This is dependent on such parameters as proximity of the release to the RVACS inlets, wind direction, and dispersion.

2. The effects of plate-out on natural circulation flow patterns, changes in RVACS surface emissivities and insulative effects of plating layer on conductivity paths, both on a local and overall basis.

These effects can however best be demonstrated on scale model tests and by physical property tests. A PRISM module at best could only be exposed to one set (design basis) of sodium aerosol conditions after which it would be required that extensive clean-up would be required. Sodium aerosol is expected to result, within design bounds, in sufficient degradation of RVACS, such that a second exposure would require extensive clean-up. It is also not considered very practical to burn the necessary large amount of sodium for a module test in view of the fact that scale model tests and physical property tests can achieve the desired objectives. Sodium aerosol testing of the module is not proposed.

Scale model tests under simulated RVACS natural draft cooling will be performed to determine the concentration of aerosol ingested and the local flow patterns within the RVACS coolant passages. Scale model tests enable variation in source location, source volume and atmospheric dispersion conditions. Testing can be conducted with both smoke patterns and actual aerosols.

Physical property tests will be performed to: (1) verify sodium aerosol deposition rates on RVACS type surfaces under RVACS operating conditions, and (2) determine the effects of deposited aerosols on conductivity, emissivity and film coefficients of RVACS heat transfer surfaces.

3.0 Scale Model Seismic Testing

See Section 14.2.2.2 for a discussion of potential scale model.

4.0 Core Cooling Capability Testing

Certification of PRISM is expected to require the demonstration of its core cooling capability. This can best be accomplished by showing that local failures are confined to the assembly in which they are postulated to occur, i.e., the probability of assembly-to-assembly propagation is sufficiently small. However, it is clearly not cost effective to operate the entire safety test facility for a significant length of time just to conduct a series of tests to demonstrate confinement of local failures. These postulated local failure-initiating mechanisms include:

1. Excess power in a single pin.

2. Insufficient flow within a fuel assembly.

3. Insufficient fuel pin heat transfer.

4. Stochastic fuel pin failure.

Tests of a prototypical PRISM fuel assembly with simulation of the above failure-initiating mechanisms can best be carried out in a test facility capable of testing full assemblies. Such testing can be conducted prior to, or, in parallel with the safety test.

APPENDIX
14B

APPENDIX 14B

SUPPORTING DEVELOPMENT NEEDED FOR SAFETY TEST

TABLE OF CONTENTS

SUPPORTING DEVELOPMENT NEEDED FOR SAFETY TEST

1.0 Introduction

This appendix summarizes the areas of development that are considered important to the success of the safety test but, at this time, are not an integral part of the safety test program. In some cases, the required development activity is either in process or there is a good chance that the specific development area will be essentially complete by the time the safety test goes into operation.

2.0 Instrumentation Development

2.1 Instrumented Core Assemblies

Instrumented assemblies for each type of PRISM core assemblies need to be designed and developed for the safety test mission. Technology transfer from the EBR-II Project, where instrumented assemblies XX09 and XX10 were developed for use during its reactor safety tests, is the most expeditious course. Some instrumentation capabilities above and beyond those of XX09 and XX10 may be desired, such as duct wall and fuel thermocouples.

2.2 Ultrasonic Flowmeters

Multipath ultrasonic flowmeters to operate reliably under sodium for several years, monitoring the sodium flow at the discharge of the four EM pumps, require some development beyond what was done in the recently terminated base technology program. A single path ultrasonic flowmeter was developed for the 12 inch EBR-II secondary pipe and has operated reliably and accurately for over five years. This, of course, is in air.

Experience has shown that the accuracy of the single path flowmeter requires a long straight piping section both upstream and downstream of the flowmeter package. Such a location can probably be found below the pump-pipe junction and non-maintainable single-path ultrasonic flowmeters are recommended there. However, the multipath ultrasonic flowmeter is the

better choice for above the pump-pipe junction where the flowmeter can be serviced and/or replaced by removal with the pump. Already developed are:

1. The theory of signal integration from a multi-path ultrasonic flowmeter;

2. Electronics and software;

3. Transducer-to-pipe attachment techniques;

4. Demonstration of high accuracies in a 20 inch flowing water loop, with the transducers in an air medium.

Demonstrating that the high-temperature transducers can be canned for submerged operation and measure sodium flow with acceptable accuracy in the specific geometry of PRISM is the major task remaining.

2.3 Special Instrumentation

Cases where the instrumentation described in Section 6.2 would require development include:

1. A remote differential-motion gauge to continuously monitor the travel of the passively elongating control rod drivelines relative to a benchmark location such as the top of the control rod assembly.

2. The system to measure local air velocities throughout the RVACS air cavity, including the provisions to remotely position the sensor.

3.0 Reactivity Feedback Characterization

Measuring the integral effect of multiple simultaneously acting feedback mechanisms is much easier than measuring them individually; but the benefits of a favorable demonstration of inherent safety will only be partially realized without separating the reactivity feedback components.

The FFTF Inherent Safety Testing Program is developing testing techniques, including the method of measuring the individual reactivity feedback components. FFTF does and can use special instrumentation to augment measurement capability. This added measurement capability and the development of analytical methods potentially can be applied directly to the PRISM safety test.