Workshop on the U.S. Nuclear Regulatory Commission's Regulatory Review for the AP1000 Design Center

China - October 2008
Instructor Manual

U.S.NRC
United States Nuclear Regulatory Commission
Protecting People and the Environment

Table of Contents
Instructor Manual

Week 1

Module 1: AP1000 Introduction and General Description 1
Module 2: AP1000 Reactor Systems - SER Section 4 23
Module 3: AP1000 Engineered Safety Features - SER Section 6.2-6.4 54
Module 4: AP1000 Engineered Safety Features and Fire Protection - SER Section 6.3-6.5 SER Section 9.5 84
Module 5: AP1000 Control Room Habitability and Auxiliary Systems - SER Sections 6.4, 9.1-9.4 119
Module 6: AP1000 Secondary Systems - SER Section 10 172
Module 7: AP1000 Accident Analysis - SER Section 15 194
Module 8: AP1000 Accident Analysis - SER Section 15 and 5.4.2 207
Module 9: AP1000 Operations and Programs - SER Sections 13.4 - 13.6 and 14 245
Module 10: AP1000 Testing and Codes - SER Section 21 264
Module 11: AP1000 Radioactive Waste Management - SER Sections 11.1 – 11.5 302
Module 12: AP1000 Radiation Protection - SER Sections 12.1 – 12.6 336
Module 13: AP1000 Operations and Emergency Planning - SER Sections 13.1-13.3 359
Module 14: AP1000 Generic Issues (Systems) - SER Section 20 377

Week 2

Module 15: AP1000 Engineering Topics - SER Sections 3.1 and 3.2 391
Module 16: AP1000 Site Envelope and Design for Wind, Tornado, Flooding, Missiles and Pipe Breaks - SER Sections 2.3, 2.4, 2.5, 3.3, 3.4, 3.5 and 3.6 417
Module 17: AP1000 Engineering Topics - SER Sections 3.7 – 3.12 453
Module 18: AP1000 Reactor Coolant and Connected Systems - SER Sections 5.1, 5.2, 5.3, 5.4.2 499
Module 19: AP1000 Engineering Topics - SER Sections 5.4.1, 5.4.3 -5.4.14, 4.5, 5.2.3, 6.1 544
Module 20: AP1000 Quality Assurance - SER Section 17 589
Module 21: AP1000 Instrumentation and Control Systems -SER Sections 7.1 and 7.2 602
Module 22: AP1000 Instrumentation and Control Systems - SER Sections 7.3 – 7.7 623
Module 23: AP1000 Electric Power Systems - SER Section 8 641
Module 24: AP1000 Technical Specifications - SER Section 16 661
Module 24: AP1000 Human Factors Engineering - SER Section 18 674
Module 25: AP1000 Severe Accidents and Probabilistic Risk Assessment – SER Section 19 692
Module 26: AP1000 Regulatory Treatment for Non-Safety Systems (RTNSS) – SER Section 22 720
Module 27: AP1000 Generic Issues (Engineering) - SER Section 20 739
Module 28: AP1000 Conclusions, Interfaces, and ACRS Review - SER Sections 23 and 24 751

AP1000 Introduction and General Description

Module 1

INSTRUCTOR: Scott Newberry
October 2008

U.S.NRC
United States Nuclear Regulatory Commission
Protecting People and the Environment

1

Welcome its good to be here!

NRC Introductory Remarks

U.S.NRC
United States Nuclear Regulatory Commission
Protecting People and the Environment

2

Introduction of Instructors

- Scott Newberry - Licensing and General Requirements
- Jack Rosenthal - Reactor Systems
- Stewart Bland - Radiation Protection
- Jack Strosnider - Engineering
- Dr. John Bickel - PRA and I&C

U.S.NRC
United States Nuclear Regulatory Commission
Protecting People and the Environment

3

All instructors have years of experience supporting the NRC in their safety work. Some were involved directly with the AP1000.

Instructor resumes are provided in your handout material.

Have each instructor stand.

While there are many years of experience here, we are not experts on all topics. So I expect there will be some questions you might have that we will need to get specific answers for you. We will be happy to do that.

Lets go through the objectives of the workshop.

Learning Objectives

- Class Participants are expected to understand:
  - The training agenda and organization of modules.
  - An overview of the Part 52 Licensing Process and the basis for certifying the AP1000—including features of the DCD.
  - Fundamental Regulatory Requirements governing NRC review.
  - Fundamental characteristics of the AP1000.
  - An overview of the safety/licensing philosophy for the AP1000:
    - enhanced level of safety
    - passive safety systems
    - role of non-safety systems
    - EPRI Utility Requirements Document
    - COL actions and interfaces
    - Inspections, Tests, Analysis and Acceptance Criteria (ITAAC)
    - Design Acceptance Criteria (DAC)
    - First of a kind testing program

U.S.NRC
United States Nuclear Regulatory Commission
Protecting People and the Environment

4

This slide addresses what we will cover in the first session of this workshop.

Our goal is to provide a description of the process and the basis for the NRC concluding that the AP1000 is "certified" such that the major safety issues associated with its design and operation are resolved acceptably, in accordance with all NRC requirements.

I will review the Part 52 process, focusing on design certification and explaining what it means. The AP1000 has been certified. The workshop is intended to focus in on the basis for the certification. You probably know that parts of the AP1000 are now being reviewed by the NRC at the request of Westinghouse. We are not up to speed on the status of all of these issues been have a general knowledge of what they are. This will come up from time to time in the workshop.

Since the AP1000 was certified using the Part 52 process in the United States, we will strive to make sure that we address the aspects of Part 52 that are very different from the Part 50 process, and that affect the certification decision. I will try to introduce some of them in this presentation.

Important examples are the concepts of Tier 1 and Tier 2 information in the Design Control Document.

I will cover and reference fundamental requirements and policy decisions made by the NRC. Many policy decisions are recorded in NRC SECY papers that apply to the NRC review of new reactors like the AP1000. I will mention several and reference others. Some of these Commission decisions formed the basis for the NRC certification decision and are important. They are enhancements to current regulatory requirements.

I will introduce some of the fundamental characteristics of the AP1000. Each of the instructors will go into these features in more detail.

I will provide an overview of the licensing philosophy that takes advantage of the passive safety systems in the AP1000 design. At this point let me emphasize several things that will be covered later:

- The safety standards for the AP1000 and this generation of reactors **is higher than** current reactors. This was proposed by the Industry in the URD and agreed to by the Commission.
- Additional levels of safety are achieved on specific issues.
- The primary basis for licensing lies in the passive safety systems—ECCS, Containment and Ultimate Heat Sink.
- An additional level of defense is provided by the regulation of the complement of non-safety systems that are risk significant:
  - The term Regulatory Treatment of Non Safety Systems (called RTNSS) is an important part of the certification process and will be described in the workshop.
  - The design assurance of these systems is assured by the Design Reliability Program (Tier 1 Section 3.7 of the DCD).
  - The operability of these systems is assured is through the IPSAC- investment protection short term availability controls (IPSAC)—very similar to technical specifications. (they are located in Ch 16 of the DCD with the Technical Specifications).
- This certification and the Part 52 process include necessary actions for the COL applicant, especially ITAAC—these are the necessary inspections, tests, analysis associated with each important design commitment to ensure proper construction. ITAAC are provided for both safety and non-safety systems.
- Special ITAAC, called Design Acceptance Criteria (DAC), are certified in the areas of I&C, piping and the control room—you will hear much more about them in this workshop.
- We will also go through the first of a kind tests proposed by Westinghouse along with the NRC review of these programs.

We are prepared to answer questions. Please write them down for us so we can address them during or after the workshop.

Training Agenda and Organization

Week 1 – Systems Scott Newberry (SN) : Stewart Bland (SB) : Jack Rosenthal (JR)					Week 2 – Engineering Scott Newberry (SN) : Jack Strosnider (JS) : John Bickel (JB)				
Mon – 10/20	Tue – 10/21	Wed – 10/22	Thu – 10/23	Fri – 10/24	Mon – 10/27	Tue – 10/28	Wed – 10/29	Thu – 10/30	Fri – 10/31
Module #1 Introduction Ch 1 & 2 SN	**Module #4** ESF & Fire Protection Ch 6 & 9 JR	**Module #7** Accident Analyses Ch 15 JR	**Module #10** Testing & Codes Ch 21 JR	**Module #13** Radiation Programs Ch 12 & 13 SB & SN	**Module #15** GDC & Classification Ch 3.1 & 3.2 JS	**Module #18** RCS Design Ch 5 JS	**Module #21** I&C Design Ch 7.1 & 7.2 JB	**Module #24** Man-Machine Tech. Spec's Ch 18 & 16 JB & SN	**Module #27** Generic Issues Ch 20 SN
Module #2 Reactor Ch 4 JR	**Module #5** Safety Systems Ch 6 & 9 SB	**Module #8** Accident Analyses Ch 15 & 5.4.2 JR	**Module #11** Health Physics Ch 11 SB	**Module #14** Generic Issues Ch 20 SN	**Module #16** Site and Structures Ch 2 & 3 JS	**Module #19** ESF Design Ch 5 & 6 JS	**Module #22** I&C Ch 7.3-7.7 JB	**Module #25** PRA and Risk Ch 19 JB	**Module #28** ACRS, COL & Interface Ch 23 & 24 SN
Module #3 ESF Ch 6 JR	**Module #6** Secondary Systems Ch 10 JR	**Module #9** Operations & Programs Ch 13 & 14 SN	**Module #12** Health Physics Ch 12 SB	Week 1 Wrap Up and Q&A ALL	**Module #17** SSC Design Ch 3 JS	**Module #20** Quality Program Ch 17 JS	**Module #23** Electrical Power Ch 8 JB	**Module #26** RTNSS Ch 22 SN	Week 2 Wrap-up and Q&A ALL

U.S.NRC
United States Nuclear Regulatory Commission
Protecting People and the Environment

5

This agenda is arranged and filled with content that is intended to:

- Cover every Chapter in the NRC Safety Evaluation of the AP1000 (NUREG-1793). This is the primary reference for this workshop.

- Workshop is organized generally into:
  - a first week of systems and radiation protection.
  - a second week of engineering, PRA and electrical/I&C.

– You see on the agenda a series of modules—3 per day-- that group Chapters from the NRC's SER. The goal here is to provide a meaningful workshop organization and to pull together an instructor team that can cover all of these modules with the perspective of a regulator.

– Prior to the workshop we put together information from NUREG 1793 and the staff review (requests for information) for each of these training modules. It is meant to be an aid to focus your thinking along with what we present in the workshop and your continued review of NUREG 1793 and the Design Certification Material.

- We have provided some time for summarizing and answering questions at the end of each week.

- Our emphasis will be on the **review** of the design by the NRC staff, the significant questions they asked, and how they were resolved in order to certify the design.

Design Certification

- Allows vendor/applicant to obtain pre-approval of an essentially complete nuclear plant design.
- Achieves regulatory finality through rulemaking.
- Facilitates standardization.
- Reduces licensing uncertainty by resolving all design issues by Commission.
- 15 yr. duration [52.55].

U.S.NRC
United States Nuclear Regulatory Commission
Protecting People and the Environment

6

- Let us first go through the objectives and elements of a Design Certification under Part 52.
- Go through the slide and THEN these points:
  - DC Requires “essentially complete” design – We’ll talk about what that means.
  - Information equivalent to that found in the FSAR is provided. It is called Tier 2 information.
  - Everything but the truly site-specific information is provided in the Design Certification Document-the DCD.
  - Scope – Whole plant.
- The major point of this slide is that the AP1000 licensing basis - systems, analysis, resolution of issues - is made final by the certification and will not be revisited during subsequent licensing of individual utility applicants that reference the AP1000 - called Combined License applicants. The design certification would be combined with a site selected and proposed by the applicant.
- Each of the presentations of this workshop will describe how these issues were resolved by a regulatory review to the current regulatory requirements and Commission Policy for new reactors.
- The requirements will be described throughout the workshop - these include the specific requirements in Part 50, Part 20, Part 100 as well as the basis for the NRC staff acceptance. This is all documented in the Staff SER NUREG-1793.
- The Part 52 Design Certification Process lays out the path to resolution, but the primary regulatory requirements from the Code of Federal Regulations including the General Design Criteria (GDCs), etc. are the basis for acceptance and Certification.

What IS Reviewed

- Final Design Information [52.47].
- Postulated Site Parameters [52.47(a)(1)]-Chapter 2 of the DCD.
- Interface Requirements [52.47(a)(25)].
- Proposed technical resolutions of unresolved safety issues [52.47(a)(21)].
- Resolution of Severe Accident Issues [52.47(a)(23)].
- Inspections, Tests, Analysis, and Acceptance Criteria (ITAAC) [52.47(b)(1)].
- Advanced Reactor Analysis and Testing Requirements [52.47(c)(2)].

U.S.NRC
United States Nuclear Regulatory Commission
Protecting People and the Environment

7

Read through these notes which parallel the slide:

Final design information must be submitted in accordance with Part 52 and is the information that the staff will review.

Most of this is called TIER 2 information, which is FSAR level of detail information. It forms the basis for the staff's decision and is updated in response to staff questions. It can be changed over time through a controlled process—similar to the Part 50.59 process.

The design certification does not address an individual site. Therefore, Site Parameters are postulated and used in the analysis. They are included in the application for review. Site Parameters are located in the Tier 1 portion of the DCD (Section 5).

52.47 lists everything that must be submitted - this includes information to resolve generic and unresolved issues and resolution of severe accident issues.

Proposed technical resolutions of those Unresolved Safety Issues and medium- and high-priority generic safety issues which are identified in the version of NUREG-0933 current on the date up to 6 months before the docket date of the application and which are technically relevant to the design.

Severe Accident Issues will be discussed by Dr. Bickel next week. 52.47 requires the submission of information to resolve the full range of these issues (degraded core challenges to the containment and containment bypass scenarios).

ITAAC - as I stated earlier - are an important part of the staff review. Submission of the ITAAC are a requirement for certification. Their implementation assures safe construction, testing, and startup of the facility. The applicant must document each completion of all ITAAC and submit them to the NRC for review and closure. This process is currently receiving much attention by the NRC and the industry so that the type of information and NRC processes are well defined. NRC inspections will be coordinated with each applicant's completion of the ITAAC.

With respect to the last point on the slide: *Applications for a design certification* ***which differ significantly from light-water reactor designs*** *that were licensed before 1997, or use simplified, inherent, passive, or other innovative means to accomplish their safety functions, will be approved only if:*

- *The performance of each safety feature of the design has been demonstrated through either* ***analysis, appropriate test programs, experience, or a combination thereof;***
- *Interdependent effects among the safety features of the design are acceptable, as demonstrated by analysis, appropriate test programs, experience, or a combination thereof; and*
- *Sufficient data exist on the safety features of the design to assess the analytical tools used for safety analyses over a sufficient range of normal operating conditions, transient conditions, and specified accident sequences, including equilibrium core conditions.*

What is NOT Reviewed

- Site safety.
- Environmental impact.
- Operational programs.
- Site-specific design features.
- Selected design area **details**:
  - Rapidly changing technology (e.g., digital I&C, human factors).
  - Design Acceptance Criteria (DAC) **ARE** reviewed.

U.S.NRC
United States Nuclear Regulatory Commission
Protecting People and the Environment

8

- This slide includes information that is NOT reviewed as part of the certification. This is a very important distinction to a Part 50 review.
- The information on this list is primarily the responsibility of the COL applicant to provide as part of the COL review (now going on for a number of applications as you probably know).
- Obviously there must be a particular site to assess site safety and the impact on the environment (performed under 10CFR Part 51).
- Operational programs (procedures, training, etc.—all very important and necessary for COL and safe operation) are not included in the DC review. We will point this out in various modules during the workshop.
- Certain selected areas, each approved individually by the Commission, are NOT REVIEWED WITH RESPECT TO **DESIGN DETAIL**. This was an issue considered carefully by the NRC as part of the certification process and is discussed in a series of papers and requirements memoranda.
- These are primarily in developing areas.
- The basis for the NRC safety finding **lies in the review and approval of the design process and the associated acceptance criteria associated with relevant design standards** that must be followed prior to operation of the plant. Their implementation will be reviewed by the NRC prior to operation, but not necessarily prior to issuance of the COL.
- They are called design acceptance criteria-DAC.
- This part of the staff review will be covered during the second week.

Design Control Document

- Tier 2 Information:
  - FSAR-equivalent information.
  - ITAAC support information.
  - COL Action Items.
  - Compliance is required, but information is changeable.

U.S.NRC
United States Nuclear Regulatory Commission
Protecting People and the Environment

9

Read through these notes which follow the slide.

Tier 2 information is FSAR-typed information that the NRC will review and approve if it meets the NRC requirements.

Read the following:

What makes up Tier 2 information?

- It not only makes up the descriptive material for all systems, programs, and analysis that shows conformance to requirements, it also provides support information to the ITAAC.

- It includes Combined License (COL) Action Items – information that needs to be reviewed at COL - these are all listed in the DCD - they are Tier 2.

- Tier 2 information can be changed by the licensee using 10CFR-50.59-like change process. The criteria that determine whether the change needs to be reviewed by the staff are located in Part 52; I will not review them here. The criteria are meant to determine if the change could be significant to safety.

Most of the information in the review is Tier 2.

Design Control Document

- Tier 1 Information:
  - Approved and certified.
  - **Compliance required.**
  - High-level, difficult to change.
  - Design commitments.
  - ITAAC.
  - Significant site parameters.
  - Significant interface requirements.

U.S.NRC
United States Nuclear Regulatory Commission
Protecting People and the Environment

10

Tier 1 information is the high level information in the DCD that is not only approved but certified.

The content of Tier 1 information is listed on this slide. It is meant to be the essence of the safety basis for the safe operation of the plant. Therefore it is intentionally hard to change--both for the licensee and the NRC. This is one of the primary objectives of Part 52 I mentioned earlier.

Remember that Tier 2 information is **approved but NOT certified**—it can be changed more easily.

Part 52 includes provisions for generic changes and departures for Tier 1, but there must be a good reason. I do not plan on going through them here.

If you look at the Tier 1 information in the DCD you will see:

- System based Descriptions and ITAAC-both safety and non-safety systems
- Non system based Descriptions and ITAAC-for example, the design reliability assurance program, certain facilities, the test program
- Interface requirements (there are none of these for the AP1000—they are all Tier 2)
- Site Parameters

Design Control Document

- Tier 2* Information:
  - That portion of Tier 2 information subject to special change process in Section VIII.B.6 of a Design Certification Rule (DCR).
  - Some Tier 2* information remains so designated for the duration of the COL, requiring a license amendment for change.
    Examples:
    - Fuel rod burn-up.
    - Fuel design requirements.
  - Some Tier 2* reverts to Tier 2 status after full power is achieved, allowing for 10 CFR 50.59 changes.
    Examples:
    - Equipment seismic qualification methods.
    - ASME Code commitments.

U.S.NRC
United States Nuclear Regulatory Commission
Protecting People and the Environment

11

Read the slide.

For Backup the complete list is:

(1) Maximum fuel rod average burn-up.
(2) Fuel principal design requirements.
(3) Fuel criteria evaluation process.
(4) Fire areas.
(5) Human factors engineering.

For Backup the complete list (for post full power) is:

(1) Nuclear Island structural dimensions.
(2) ASME Boiler and Pressure Vessel Code, Section III, and Code Case N-284.
(3) Design Summary of Critical Sections.
(4) ACI 318, ACI 349, and ANSI/AISC-690.
(5) Definition of critical locations and thicknesses.
(6) Seismic qualification methods and standards.
(7) Nuclear design of fuel and reactivity control system, except burn-up limit.
(8) Motor-operated and power-operated valves.
(9) Instrumentation and control system design processes, methods, and standards.
(10) PRHR natural circulation test (first plant only).
(11) ADS and CMT verification tests (first three plants only).

Introduction to the DCD

- Chapter 1 of the DCD (and 1793) provides:
  - General Design Description.
  - Comparison with similar Facility Designs.
  - Applicable Regulatory Requirements including important NRC SECY Policy Papers.
  - Overview of 27 confirmatory items.
  - Overview of exemptions.
  - Tier 2* information.
  - Concept of COL action items.

U.S.NRC
United States Nuclear Regulatory Commission
Protecting People and the Environment

12

Lets look at the DCD a little, along with the NRC SER-NUREG 1793.

Read this slide and relate a little to what you have already talked about and what will be covered in the workshop.

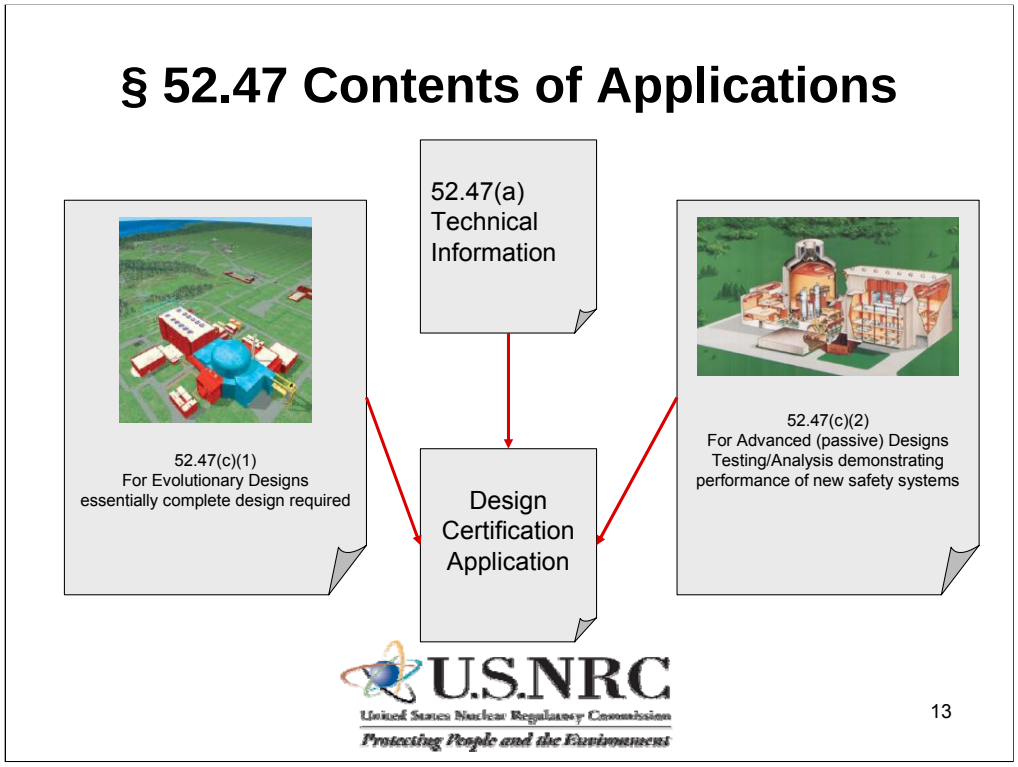

This is a summary slide that the NRC frequently uses that shows the different parts of 52.47. For the AP1000:

We are dealing with 52.47(a).

This is the requirement for what must be submitted in the application. We will talk about it throughout the workshop.

Each of the modules in this workshop describes material submitted based on the requirements of 52.47.

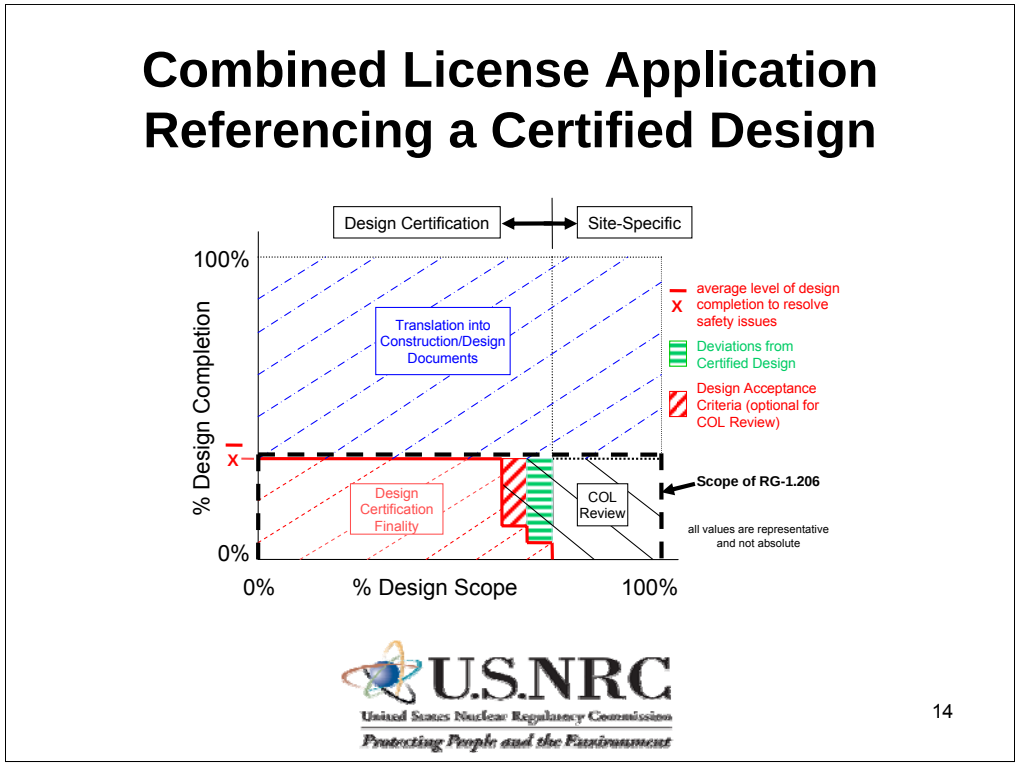

This slide is taken from RG 1.206 (and an NRC presentation) and is meant to illustrate several things in a summary fashion.

My primary motivation for using this slide is to help think about the differences and similarities between Part 52 licensing and Part 50. Perhaps you could draw a similar picture for the Part 50 process.

1. A major portion of the design scope of the AP1000 is addressed in certification - the RED.

2. Note that the COL still is responsible for a good fraction of the design.

3. The slide includes the small fraction of the design associated with DAC-RED diagonal - which is completed by the COL in a very few areas.

It is important to note that the translation of the design into detailed documents will likely occur AFTER design certification. This constitutes a large fraction of the actual design – the BLUE.

Using a 10CFR Part 50 licensing process this translation into detailed design documents would occur during the review PRIOR to issuance of the Operating License.

COL/DCR Interface Issues

- Generic DCD must be made plant-specific [DCR Appendix IV.A.2.a].
- Plant-specific Technical Specifications must be submitted [DCR Appendix IV.A.2.c].
- Compliance with system interface requirements must be demonstrated [52.79(d)].
- Proposed ITAAC for site-specific design features must be submitted [52.80(a)].
- Site-specific design features must be described.
- The application must contain information sufficient to demonstrate that the site characteristics fall within the site parameters specified in the design certification [52.79(d)].

U.S.NRC
United States Nuclear Regulatory Commission
Protecting People and the Environment

15

Read through the following which parallels the slide:

- COL will convert the certified design to a plant-specific license.
- This slide addresses significant areas that must be addressed by the COL applicant.
- Much of the DCD will be incorporated by reference. This incorporation is NOT reviewed by the staff.
- Technical specifications will need to be submitted with plant specific parameters.
- All interfaces and action items will need to be submitted.
- The actual site parameters will need to be used in all analyses along with a justification relative to the DCD.
- And plant specific ITAAC will need to be submitted—if there are any. In most cases the COL will adopt the AP1000 ITAAC.

COL ITAAC

- Applicants must provide ITAAC for the facility [52.80(a)].
- Applicants may complete some ITAAC before COL is issued [52.97(a)(2)].
- Licensee shall submit schedule for completing ITAAC [52.99(a)].
- Licensee must inform NRC that ITAAC have been completed [52.99(c)].
- NRC shall ensure that the ITAAC are performed [52.99(e)].
- NRC shall notify the public of ITAAC completion [52.99(e)].

U.S.NRC
United States Nuclear Regulatory Commission
Protecting People and the Environment

16

Read the following:

The slide lists the responsibilities of the COL applicant with respect to ITAAC which were discussed previously.

These are noted on the slide.

The NRC has prepared a detailed process to ensure that all ITAAC will be performed. I will be discussing it next week.

In summary, the staff will inspect/review the ITAAC results. A significant amount of regulatory work will go on between the issuance of a COL and the operation of the facility.

Although not on the slide, the NRC must find that the ITAAC have been met before allowing fuel load of the reactor (52.103g).

Requirements and Guidance Governing the Review

- 10 CFR Part 52:
  - Sections 52.47, “Contents of Applications.”
  - 10 CFR 52.48, “Standards for Review of Applications”; (applicable parts of 50, 20, 73, 100).
  - 10 CFR 52.53. (review by the ACRS).
- NUREG-0800, “Standard Review Plan for the Review of Safety Analysis Reports for Nuclear Power Plants.” (6 months before docket date).
- Commission guidance provided in the Requirements Memoranda:
  - Technical issues (ATWS, Instrumentation, Fire).
  - Process issues (Non-Safety Equipment, Design Acceptance Criteria).

U.S.NRC
United States Nuclear Regulatory Commission
Protecting People and the Environment

17

The Governing Documents used by the staff are listed on this slide.

52.47 is the detailed regulation already discussed that lists everything that must be in the application in a sufficient level of detail so that a conclusion on all safety questions can be reached.

The regulatory requirements used in the review are not taken from Part 52, but from Part 50, 20, 73 and 100. You will see this in each Module.

The Standard Review Plan is explicitly included in the regulation and the applicable version is used. It is not a requirement. Applicants can propose alternative ways to meet the SRP since it is NOT a requirement. The point on this slide was that it was an important part of the NRC review.

The full range of Commission Policy going back over 20 years are referenced in the AP1000 SER since they were formulated as reactor reviews and policy was developed over the years. We will discuss many of them. Several of the issues are listed on this slide.

For example SECY 90-016 is a paper that covers many important technical issues. The intent was to enhance safety in particular areas.

Part 52 does include some of its own information requirements. Specific requirements to resolve unresolved safety issues and generic safety issues are included in the rule. These will be covered in more detail in two instruction modules.

A description of the PRA must be submitted with its results along with information on the prevention and mitigation of severe accidents. This will be covered in detail in the second week.

And as I mentioned earlier the Commission must find that ITAAC have been met prior to fuel load. Much more on this later.

AP1000 Safety and Licensing Philosophy

- Evolved over many years in coordination with the industry, EPRI, the ACRS, and the public.
- Higher levels of safety are achieved on particular issues.
- Overall safety is enhanced through industry proposals and Commission policy.
- The role of passive systems and the reliance on non-safety systems to provide enhanced defense in depth and achieve higher levels of safety is recognized in the licensing framework of Part 52 and implemented by the NRC for the AP1000.
- These many decisions are described in the NRC AP1000 SER and its referenced SECY papers and associated SRMs (e.g., SECY 90-016).

U.S.NRC
United States Nuclear Regulatory Commission
Protecting People and the Environment

18

Instructor will read through the slide.

A very good starting point, should one want to track the evolution of issues, is starting with SECY 90-016 and subsequent ACRS letters, and Commission requirements memoranda.

Safety issue finality is reached for the AP1000 in Design Certification Rulemaking.

The last part of this presentation looks at several findings of the review relative to regulatory requirements largely because of the passive design and non-reliance on AC power.

Plant Design Summary

- Major Characteristics
  - 3415 MWt
  - 1000 MWe
  - 100% load rejection without reactor trip or safety valve opening.
  - 60 year design objective (staff reviewed to 40 years).

- Major Design Features
  - Two-loop 1150 MWe Pressurized Light Water Reactor.
  - Canned motor cooling pumps internally mounted in steam generators (US Navy).
  - Elimination of RCS loop seal.
  - No PORVs.
  - Larger pressurizer.

U.S.NRC
United States Nuclear Regulatory Commission
Protecting People and the Environment

19

One of my objectives is to give a very brief summary of the design, its characteristics and features.

Read through the slide emphasizing a few of the points.

Continuing on to the next slide.

Plant Design and Summary (cont)

- Top Mounted Incore detectors.
- All welded core shroud (Doel and Tihange).
- Ring forged reactor vessel (Doel and Tihange).
- Overall design simplicity and reduced number of components.
- Modular construction - simpler and shorter construction time.
- Passive safety systems:
  - No reliance on AC power (injection and heat removal).
  - Automatic response to accidents.
  - Non-safety AC backup systems.
  - Autocatalytic hydrogen recombiners.
  - Control Room Habitability system.
- Regulatory Treatment of Non-Safety Systems.
- Microprocessor-based protection and control:
  - Multiplexing and fiber optics.
  - Compact advanced control room.
- Turbine Orientation to minimize missile interaction.

U.S.NRC
United States Nuclear Regulatory Commission
Protecting People and the Environment

20

Continue reading through the slide selecting some examples-tie each one to modules as much as possible.

Regulatory Review Summary

- In accordance with 10 CFR 52.48, the staff used the current regulations in 10 CFR Part 20,"Standards for Protection Against Radiation"; Part 50, "Domestic Licensing of Production and Utilization Facilities"; Part 73, "Physical Protection of Plants and Materials"; and Part 100,"Reactor Site Criteria"; in reviewing Westinghouse's application for certification of the AP1000 design.
- The staff recognized that the application of certain regulations to the AP1000 design would not serve the underlying purpose of the rule, or would not be necessary to achieve the underlying purpose of the rule. There are three exemptions:
  - Section 8.2.3.2: Exemption from GDC 17, "Electric Power Systems," requirement for a physically independent circuit (i.e., a second off-site electrical power source).
  - Section 15.2.9: Exemption from 10 CFR 50.62, "Requirements for Reduction of Risk from Anticipated Transients without Scram (ATWS) Events for Light-Water-Cooled Nuclear Power Plants," requirement for automatic startup of auxiliary feed water system.
  - Section 18.8.2.3: Exemption from 10 CFR 50.34(f)(2)(iv) requirements for safety parameter display console.
- The remainder of the workshop will describe the major parts of the NRC review and certification of the AP1000 relative to these requirements.

U.S.NRC
United States Nuclear Regulatory Commission
Protecting People and the Environment

21

This is the last slide of the module.

Read through the slide.

NNSA Sanmen NPP Review

- The training team was provided with Sanmen NPP questions.
- Some points relating to these questions will be included during this workshop.

U.S.NRC
United States Nuclear Regulatory Commission
Protecting People and the Environment

22

Read through the points on the slide and add any relevant information resulting from additional investigation.

AP1000 Reactor Systems

Module 2
SER Section 4

INSTRUCTOR: Jack Rosenthal
October 2008

U.S.NRC
United States Nuclear Regulatory Commission
Protecting People and the Environment

Learning Objectives

- Class Participants are expected to understand:
  - Basic design of the Reactor System.
  - Scope and depth of NRC staff review.
  - SRP acceptance criteria.
  - SER Evaluation Findings.

U.S.NRC
United States Nuclear Regulatory Commission
Protecting People and the Environment

24

After participating in this training, participants should understand the regulatory bases for an acceptable Fuel System Design, including:

- Design basis
- Design evaluation
- Testing and inspection
- Required evaluations
- Analytical methods
- Instrumentation requirements

Examination of the CRDS design to identify possible single failures.

Evaluation of the CRDS to verify the following:

A. Essential portions can be isolated from nonessential portions.
B. The CRDS cooling system meets the design requirements.
C. The functional tests verify the proper rod insertion, withdrawal, and scram operation times, or that the inspections, tests, analysis, and acceptance criteria (ITAAC) are sufficient to ensure that rod insertion, withdrawal, and scram operation times will operate in accordance with the certification.
D. Redundant reactivity control systems are not vulnerable to common mode failures.

AP1000 Reactor

- Scope
  - Fuel System Design.
  - Nuclear Design.
  - Thermal and Hydraulic Design.
  - Control Rod Structural Materials.
  - Reactor Internal and Core Support Structure Materials.
  - Functional Design of Control Rod Drive System.

U.S.NRC
United States Nuclear Regulatory Commission
Protecting People and the Environment

25

4.2 Fuel System Design.
4.3 Nuclear Design.
4.4 Thermal and Hydraulic Design.
4.5.1 Control Rod Drive Structural Materials.
4.5.2 Reactor Internal and Core Support Structure Materials.
4.6 Functional Design of Control Rod Drive System.

AP1000 Reactor

• Rx core output	3400 MWt
• Rx pressure	15500 kPa
• Flow	14.2E3 kg/sec
• T average	300 C
• Fuel	17X17 Robust Fuel
• Fuel Assemblies	157
• Fuel	96000 kg UO2

U.S.NRC
United States Nuclear Regulatory Commission
Protecting People and the Environment

26

Principle parameters – intended to put participants on same page.

AP1000 Reactor

- Design Requirements
  - Fuel damage is predicted not to occur during normal operation and AOO.
  - Materials compatible.
  - Minimum DNBR.
  - Fuel melting will not occur at the overpower limit.
  - PCT following a loss-of-coolant accident is less than 2200°F.
  - Core average linear power is less than or equal to 5.71 kw/ft .
  - Hot channel factor, FQ, is less than or equal to 2.60.

U.S.NRC
United States Nuclear Regulatory Commission
Protecting People and the Environment

27

Design Requirements

- Fuel damage, defined as penetration of the fuel clad, is predicted not to occur during normal operation and anticipated operational transients.
- Materials used in the fuel assembly and in-core control components are selected to be compatible in a pressurized water reactor environment.
- For normal operation and anticipated transient conditions, the minimum DNBR calculated using the WRB-2M correlation is greater than or equal to 1.14.
- Fuel melting will not occur at the overpower limit for Condition I or II events.
- The maximum fuel rod cladding temperature following a loss-of-coolant accident is calculated to be less than 2200°F.
- For normal operation and anticipated transient conditions, the calculated core average linear power, including densification effects, is less than or equal to 5.71 kw/ft for the initial fuel cycle.
- For normal operation and anticipated transient conditions, the calculated total heat flux hot channel factor, FQ, is less than or equal to 2.60 for the initial fuel cycle.

AP1000 Reactor

- Design Requirements (continued)
  - Rod worths provide sufficient reactivity.
  - Accidental withdrawal of two control banks does not exceed peak linear heat rate and meet DNBR.
  - Maximum control rod speed.
  - Control rod drives hydrotested.
  - Initial fuel rod temperature coefficient is negative for power conditions.
  - Initial fuel moderator temperature coefficient is negative for power.

U.S.NRC
United States Nuclear Regulatory Commission
Protecting People and the Environment

28

Calculated rod worths provide sufficient reactivity to account for the power defect from full power to zero power and provide the required shutdown margin, with allowance for the worst stuck rod.

- Calculations of the accidental withdrawal of two control banks using the maximum reactivity change rate predict that the peak linear heat rate and DNBR limits are met.

- The maximum rod control cluster assembly and gray rod speed (or travel rate) is 45 inches per minute.

- The control rod drive mechanisms are hydrotested after manufacture at a minimum of 150 percent of system design pressure.

- For the initial fuel cycle, the fuel rod temperature coefficient is calculated to be negative for power operating conditions.

- For the initial fuel cycle, the moderator temperature coefficient is calculated to be negative for power operating conditions.

AP1000 Reactor
4.2 Fuel System Design

- AP1000 fuel assemblies are the same as the 17x17 XL Robust fuel assemblies except that they have four intermediate flow mixing grids in the top mixing vane grid spans.
- Substantial operating experience.

U.S.NRC
United States Nuclear Regulatory Commission
Protecting People and the Environment

29

There is substantial operating experience with the 17x17 Robust and 17x17 XL Robust fuel assemblies. The XL Robust fuel assembly evolved from the previous VANTAGE+, VANTAGE 5 and VANTAGE 5 HYBRID designs. The XL Robust fuel assembly is based on the substantial design and operating experience with those designs. WCAP-8183 (“Operational Experience with Westinghouse Cores”), details 17x17 fuel assembly operating experience.

AP1000 Reactor
4.2 Fuel System Design

- COL Items
  - DCD, Revision 15 - applicants referencing certified design will address changes to the reference design.
  - DCD, Revision 16 - COL license information has been completely addressed in APP-GW-GLR-059. No additional work by COL is required.
- No ITAAC

U.S.NRC
United States Nuclear Regulatory Commission
Protecting People and the Environment

30

Regarding DCD, Revision 15, Section 4.2.5 NUREG-1973, Appendix F states: COL applicants referencing the AP1000 certified design will address changes to the reference design of the fuel, burnable absorber rods, rod cluster control assemblies, or initial core design from that presented in the DCD.

In DCD, Revision 16, Section 4.2.5 states: The Combined License information requested in this subsection has been completely addressed in APP-GW-GLR-059, and the applicable changes have been incorporated into the DCD. No additional work is required by the Combined License applicant to address the Combined License information requested in this subsection.

AP1000 Reactor
4.2 Fuel System Design

- SRP Acceptance Criteria
  - Fuel System Damage.
  - Fuel Rod Failure.
  - Fuel Coolability.
  - Description and Drawings.
  - Design Evaluation.
  - Testing, Inspection and Surveillance Plans.

U.S.NRC
United States Nuclear Regulatory Commission
Protecting People and the Environment

31

Also:

Appendix A
Evaluation Of Fuel Assembly Structural Response To Externally Applied Forces.

Appendix B
Interim Acceptance Criteria And Guidance For The Reactivity Initiated Accidents.

AP1000 Reactor
4.2 Fuel System Design

- SER Evaluation Findings
  - The fuel system will not be damaged by normal operation, including the effects of AOOs.
  - Fuel damage during postulated accidents will not be severe enough to prevent control rod insertion when required.
  - The number of fuel rod failures is not underestimated for postulated accidents.
  - Core coolability will always be maintained during design-basis transients and accidents.

U.S.NRC
United States Nuclear Regulatory Commission
Protecting People and the Environment

32

SRP 4.2 IV Evaluation Findings.

AP1000 Reactor
4.3 Nuclear Design

- The nuclear design must ensure that the specified acceptable fuel design limits will not be exceeded during normal operation, including anticipated operational transients, and that the effects of postulated reactivity accidents will not cause significant damage to the reactor coolant pressure boundary or impair the capability to cool the core.

U.S.NRC
United States Nuclear Regulatory Commission
Protecting People and the Environment

33

GDC 10, requiring the reactor design (reactor core, reactor coolant system, control and protection systems) to assure that specified acceptable fuel design limits are not exceeded during any condition of normal operation, including AOOs.

- GDC 11, “Reactor Inherent Protection,” requiring a net negative prompt feedback coefficient in the power operating range.
- GDC 12, “Suppression of Reactor Power Oscillations,” requiring that power oscillations that can result in conditions exceeding SAFDLs are not possible, or can be reliably and readily detected and suppressed.
- GDC 13, “Instrumentation and Control,” requiring a control and monitoring system to monitor variables and systems over their anticipated ranges for normal operation, AOOs, and accident conditions.
- GDC 20, “Protection System Functions,” requiring, in part, a protection system that automatically initiates a rapid control rod insertion to assure that fuel design limits are not exceeded as a result of AOOs.
- GDC 25, “Protection System Requirements for Reactivity Control Malfunctions,” requiring protection systems designed to assure that SAFDLs are not exceeded for any single malfunction of the reactivity control systems.
- GDC 26, “Reactivity Control System Redundancy and Capability,” requiring, in part, a reactivity control system capable of holding the reactor subcritical under cold conditions.
- GDC 27, requiring, in part, a control system designed to control reactivity changes during accident conditions in conjunction with poison addition by the emergency core cooling system (ECCS).
- GDC 28, “Reactivity Limits,” requiring, in part, that the reactivity control systems be designed to limit reactivity accidents so that the reactor coolant system boundary is not damaged beyond limited local yielding.

AP1000 Reactor
4.3 Nuclear Design

- Design Description.
- Power Distribution.
- Reactivity Coefficients.
- Control Requirements.
- Stability.
- Analytic Methods.

U.S.NRC
United States Nuclear Regulatory Commission
Protecting People and the Environment

34

Reload cores 18 months accumulating a cycle burnup of approximately 21,000 MWD/MTU.

- WCAP-7308-L-P-A, “Evaluation of Nuclear Hot Channel Factor Uncertainties,” issued in June 1988.
- WCAP-15025-P-A, “Modified WRB-2 Correlation, WRB-2M, for Predicting Critical Heat Flux in 17x17 Rod Bundles with Modified LPD Mixing Vane Grids,” issued in April 1999.
- WCAP-12472-P-A, “BEACON: Core Monitoring and Operations Support System,” issued in August 1994.
- WCAP-7084-P-A, “The Panda Code,” issued in February 1975.

4.3.3 Analytical Methods

In DCD Tier 2, Section 4.3.3.2, “Macroscopic Group Constants,” the applicant described the PHOENIX-P and LEOPARD/CINDER computer programs and calculation methods used to calculate the nuclear characteristics of the reactor design. The applicant used the NRC-approved computer code, PHOENIX-P (see WCAP-11596-P-A, “Qualification of the PHOENIX-P/ANC Nuclear Design System for Pressurized Water Reactor Cores,” issued in June 1988), in place of LEOPARD/CINDER to generate typical core parameters. Based on the calculated core parameters, and the applicant’s use of PHOENIX-P, the staff concludes that the information presented adequately demonstrates the ability of this analytical method to calculate the reactor physics characteristics of the AP1000 core.

AP1000 Reactor
4.3 Nuclear Design

- COL Items
  - DCD, Revision 15 - applicants referencing certified design will address changes to the reference design.
  - DCD, Revision 16 - COL license information has been completely addressed in APP-GW-GLR-059. No additional work by COL is required.
- No ITAAC

U.S.NRC
United States Nuclear Regulatory Commission
Protecting People and the Environment

35

FSER item 4.2.8-1: Regarding DCD, Revision 15, Section 4.3.4, NUREG-1973, Appendix F states: COL applicants referencing the AP1000 certified design will address changes to the reference design of the fuel, burnable absorber rods, rod cluster control assemblies, or initial core design from that presented in the DCD.

In DCD, Revision 16, Section 4.3.4 states: The Combined License information requested in this subsection has been completely addressed in APP-GW-GLR-059, and the applicable changes have been incorporated into the DCD. No additional work is required by the Combined License applicant to address the Combined License information requested in this subsection.

AP1000 Reactor
4.3 Nuclear Design

- SER Evaluation Findings:

  The applicant has satisfied the requirements of General Design Criteria with respect to SAFDLs.

  – No fuel damage occurs during normal operation, including the effects of AOOs (GDC 10).
  – Automatic initiation of the reactivity control system ensures that fuel design criteria are not exceeded (GDC 20).

  – SAFDL – Specified Acceptable Fuel Design Limits.

U.S.NRC
United States Nuclear Regulatory Commission
Protecting People and the Environment

36

- The applicant has satisfied the requirements of GDC 10, 20, and 25 with respect to SAFDLs by demonstrating that the AP1000 design meets the following objectives:
  – No fuel damage occurs during normal operation, including the effects of AOOs (GDC 10).
  – Automatic initiation of the reactivity control system ensures that fuel design criteria are not exceeded as a result of AOOs and that systems and components important to safety will automatically operate under accident conditions (GDC 20).
  – No single malfunction of the reactivity control system will violate the fuel design limits (GDC 25).
- The staff reviewed the results of the applicant's calculations to demonstrate that the Doppler and moderator coefficients of reactivity are negative and will prevent a rapid, uncontrolled reactivity excursion. The staff has determined that the calculations are suitably conservative, were performed with NRC-approved physics methods, and use appropriate AP1000-specific inputs. Accordingly, the applicant has satisfied the requirements of GDC 11 with respect to nuclear feedback characteristics.
- The staff reviewed the applicant's analysis of power oscillations and has determined that the analysis is suitably conservative, was performed with NRC-approved physics methods, and used appropriate AP1000-specific inputs. Accordingly, the applicant has satisfied the requirements of GDC 12 by showing that power oscillations can be reliably and readily detected and suppressed.
- The staff reviewed the applicant's core monitoring system, and found that the applicant has satisfied the requirements of GDC 13 by providing instrumentation and controls to monitor the following variables and systems that can affect the fission process:
  – reactor coolant system (RCS).
  – steam and core power conversion systems.
  – containment.
  – engineered safety systems.
  – auxiliary systems.
  – reactor power distribution.
  – control rod positions and patterns.
  – process variables, such as temperatures and pressures.

AP1000 Reactor
4.3 Nuclear Design

- SER Evaluation Findings (continued):
  - No single malfunction of the reactivity control system will violate the fuel design limits (GDC 25).
  - The Doppler and moderator coefficients of reactivity are negative and will prevent a rapid, uncontrolled reactivity excursion (GDC 11).
  - Analysis of power oscillations conservative (GDC 12).
  - Core monitoring system satisfies requirements (GDC 13).

U.S.NRC
United States Nuclear Regulatory Commission
Protecting People and the Environment

37

Evaluation notes continued.

- The AP1000 design includes RCCAs and GRCAs, as well as a chemical shim (boric acid), which provide the following capabilities:
  - reliable shutdown of the reactor during normal operation conditions and during AOOs.
  - adequate boration to establish and maintain safe-shutdown conditions.
- The AP1000 design provides reactivity control systems, in conjunction with absorber addition by the ECCS, to reliably control reactivity changes under the following postulated accident conditions:
  - The design provides a movable rod reactivity control system and a liquid reactivity control system.
  - The applicant has performed calculations to demonstrate that the core has margin sufficient to shut down the reactor, assuming the highest-worth RCCA is stuck, as discussed in Section 4.3.2.4 of this report.
- The applicant has followed the methodology described in WCAP-7588-A, “An Evaluation of Rod Ejection Accident in Westinghouse Pressurized Water Reactors Using Spatial Kinetics Methods,” Revision 1, issued in January 1975. This NRC-approved topical report analyzes the assumptions used in evaluating a control rod ejection accident for PWRs. Moreover, the criteria and results presented in WCAP-7588 are within the criteria and limits prescribed by Regulatory Guide (RG) 1.77, “Assumptions Used for Evaluating a Control Rod Ejection Accident for Pressurized Water Reactors. ”For the reasons set forth above, the staff concludes that the AP1000 nuclear design satisfies the requirements of GDC 10, 11, 12, 13, 20, 25, 26, 27, and 28 and, therefore, is acceptable.

  WCAP-7588-A, “An Evaluation of Rod Ejection Accident in Westinghouse Pressurized Water Reactors Using Spatial Kinetics Methods,” Revision 1, issued in January 1975.

AP1000 Reactor
4.3 Nuclear Design

- SER Evaluation Findings (continued):
  - Can be reliably shutdown under normal, AOO, and accident conditions.
  - Adequate boration to establish and maintain safe-shutdown.
  - Acceptable rod ejection criteria and analysis.
  - Calculations are conservative, were performed with NRC-approved physics methods, and use appropriate AP1000-specific inputs.

U.S.NRC
United States Nuclear Regulatory Commission
Protecting People and the Environment

38

Evaluation notes continued.

AP1000 Reactor
4.4 Thermal-Hydraulic Design

- Scope
  - Departure From Nucleate Boiling.
  - Fuel Temperature Design Basis.
  - Core Flow Design Basis.
  - Hydrodynamic Stability.
  - Effects of Fuel Rod Bow on DNBR.
  - Testing and Verification.
  - Instrumentation Requirements.

U.S.NRC
United States Nuclear Regulatory Commission
Protecting People and the Environment

39

The Reactor, Thermal And Hydraulic Design of the AP1000 utilizes proven technology, which builds on over 35 years of operating PWR experience.

Electric Power Research Institute (EPRI) NP-2511-CCM-A, “VIPRE-01: A Thermal Reactor Hydraulic Code for Reactor Core, ” Volumes 1–3, issued in August 1989, and Volume 4, issued in April 1987, and in WCAP-14565-P-A, “VIPRE-01: Modeling and Qualification for Pressurized Water Reactor Non-LOCA Thermal-Hydraulic Safety Analysis,” issued in October 1999.

WCAP-11397-P-A, “Revised Thermal Design Procedure,” issued in April 1989.

WCAP-12488-A limits the evaluation to a maximum fuel rod average burnup of 62,000 MWD/MTU.

AP1000 Reactor
4.4 Thermal-Hydraulic Design

- COL Items
  - FSER item 4.4-1: Following selection of the actual plant operating instrumentation and calculation of the instrumentation uncertainties, the COL applicant will calculate the DNBR values using the revised thermal design procedure.
- No ITAAC

U.S.NRC
United States Nuclear Regulatory Commission
Protecting People and the Environment

40

FSER item 4.2.8-1: Regarding DCD, Revision 15, Section 4.4.7 NUREG-1973, Appendix F states: COL applicants referencing the AP1000 certified design will address changes to the reference design of the fuel, burnable absorber rods, rod cluster control assemblies, or initial core design from that presented in the DCD.

DCD, Revision 16, Section 4.4.7 remains unchanged, although similar statements in DCD, Sections 4.2.5 and 4.3.4 associated with FSER item 4.2.8-1 have been changed to: The Combined License information requested in this subsection has been completely addressed in APP-GW-GLR-059, and the applicable changes have been incorporated into the DCD. No additional work is required by the Combined License applicant to address the Combined License information requested in this subsection.

FSER item 4.4-1: Following selection of the actual plant operating instrumentation and calculation of the instrumentation uncertainties of the operating plant parameters, the COL applicant will calculate the design limit departure from nucleate boiling ratio (DNBR) values using the revised thermal design procedure with these instrumentation uncertainties and confirm that either the design limit DNBR values remain valid, or that the safety analysis minimum DNBR bounds the new design limit DNBR values plus DNBR penalties, such as rod bow penalty.

AP1000 Reactor
4.4 Thermal-Hydraulic Design

- SRP Acceptance Criteria
  - Assurance that there be at least a 95% probability at the 95% confidence level that the hot fuel rod in the core does not experience a DNB or transition condition during normal operation or AOOs.
  - Acceptable sub-channel analysis.
  - The design should address core oscillations and thermal-hydraulic instabilities.

U.S.NRC
United States Nuclear Regulatory Commission
Protecting People and the Environment

41

SRP Section 4.2 specifies the acceptance criteria for the evaluation of fuel design limits. One criterion provides assurance that there be at least a 95-percent probability at the 95-percent confidence level that the hot fuel rod in the core does not experience a DNB or transition condition during normal operation or AOOs. Uncertainties in the values of process parameters (e.g., reactor power, coolant flow rate, core bypass flow, inlet temperature and pressure, nuclear and engineering hot channel factors), core design parameters, and calculational methods used in the assessment of thermal margin should be treated with at least a 95-percent probability at the 95-percent confidence level. The assessment of thermal margin should also consider the uncertainties in instrumentation. The origin of each uncertainty parameter, such as fabrication uncertainty, computational uncertainty, or measurement uncertainty e.g., reactor power, coolant temperature, flow), should be identified. Each uncertainty parameter should be identified as statistical or deterministic and should clearly describe the methodologies used to combine uncertainties. Core design and operating changes for extended power uprates (EPUs) should be performed in a manner that ensures adequate safety margin. At a minimum, there should be a 95-percent probability at the 95-percent confidence level that a hot fuel rod in the reactor core will not experience a DNB or a transition condition during normal operation or AOOs. Specifically, this safety criterion should be satisfied while accounting for changes in radial and bundle power distribution, including any changes in critical heat flux ratio (CHFR) and CPR. The reviewer should confirm the adequacy of the flow-based average power range monitor flux trip and safety limit minimum critical power ratio at the uprated conditions (Review Standard RS-001). The reviewer should also ensure that the correlations used in the EPU analysis do not exceed their validation range under uprated normal operation and AOO conditions. The following are two examples of acceptable approaches to meeting this criterion:

A. For departure from nucleate boiling ratio (DNBR), CHFR or CPR correlations, there should be a 95-percent probability at the 95-percent confidence level that the hot rod in the core does not experience a DNB or boiling transition condition during normal operation or AOOs.
B. The design should address core oscillations and thermal-hydraulic instabilities as described in SRP Section 15.9.

AP1000 Reactor
4.4 Thermal-Hydraulic Design

- SRP Acceptance Criteria (continued)
  - The proposed technical specifications should ensure that the plant can be safely operated at steady-state conditions under all expected combinations of system parameters. The safety limits and limiting safety settings must be established for each parameter, or combinations of parameters.
  - Preoperational and initial startup test programs should follow the recommendations of Regulatory Guide 1.68.
  - The design description and proposed procedures for use of the loose parts monitoring system should be consistent with the requirements of Regulatory Guide 1.133.

U.S.NRC
United States Nuclear Regulatory Commission
Protecting People and the Environment

42

SRP criteria continued.

C. Methods for calculating single-phase and two-phase fluid flow in the reactor vessel and other components should include classical fluid mechanics relationships and appropriate empirical correlations. For components of unusual geometry, these relationships should be confirmed empirically using representative databases from approved reports.

D. The proposed technical specifications should ensure that the plant can be safely operated at steady-state conditions under all expected combinations of system parameters. The safety limits and limiting safety settings must be established for each parameter, or combinations of parameters, to satisfy specific acceptance criterion 1, above.

E. Preoperational and initial startup test programs should follow the recommendations of Regulatory Guide 1.68, as it relates to measurements and the confirmation of thermal-hydraulic design aspects.

F. The design description and proposed procedures for use of the loose parts monitoring system should be consistent with the requirements of Regulatory Guide 1.133.

G. The thermal-hydraulic design should account for the effects of crud in the CHF calculations in the core or in the pressure drop throughout the RCS. Process monitoring provisions should assure the capability to detect a 3-percent drop in the reactor coolant flow. The flow should be monitored every 24 hours.

H. Instrumentation provided for an unambiguous indication of ICC, such as primary coolant saturation meters in PWRs, reactor vessel measurement systems, and core exit thermocouples, should meet the design requirements of TMI Action Plan Item II.F.2 of NUREG-0737. Applicants subject to 10 CFR 50.34(f) should meet the requirements of 10 CFR 50.34(f)(2)(xviii). Procedures for detection and recovery from conditions of ICC must be consistent with technical guidelines, including applicable EPGs developed pursuant to the TMI action plan, that incorporate response predictions based on appropriate analyses.

I. Thermal-hydraulic stability performance of the core during an ATWS event should not exceed acceptable fuel design limits. SRP Sections 15.8 and 15.9 describe an acceptable method for performing such an analysis for PWR cores. The staff has determined that the AP1000 core is designed with appropriate margin to assure that acceptable fuel design limits are not exceeded during steady-state operation or AOOs. This conclusion is based on the applicant's analyses of the core thermal-hydraulic performance, which was reviewed by the staff, as discussed above, and found to be acceptable.

AP1000 Reactor
4.4 Thermal-Hydraulic Design

- SRP Acceptance Criteria (continued)
  - Instrumentation provided for an unambiguous indication of ICC, such as primary coolant saturation meters in PWRs, reactor vessel measurement systems, and core exit thermocouples, should meet the design requirements of TMI Action Plan Item II.F.2 of NUREG-0737.

- SER Evaluation Findings
  - The staff has determined that the AP1000 core is designed with appropriate margin to assure that acceptable fuel design limits are not exceeded during steady-state operation or AOOs. This conclusion is based on the applicant's analyses of the core thermal-hydraulic performance, which was reviewed by the staff, and found to be acceptable.

U.S.NRC
United States Nuclear Regulatory Commission
Protecting People and the Environment

43

SRP Acceptance Criteria continued and SER Evaluation Findings.

AP1000 Reactor
4.5 Control Rod Drive System
Structural Materials

- Scope
  - Materials Specifications.
  - Fabrication and Processing of Austenitic Stainless Steel Components.
  - Other Materials.
  - Contamination Protection and Cleaning of Austenitic Stainless Steel.

U.S.NRC
United States Nuclear Regulatory Commission
Protecting People and the Environment

AP1000 Reactor
4.5 Control Rod Drive System
Structural Materials

- ITAAC.
- The components identified as ASME Code Section III are designed and constructed in accordance with ASME Code Section III requirements.
- Pressure boundary welds in components identified as ASME Code Section III meet ASME Code Section III requirements.

U.S.NRC
United States Nuclear Regulatory Commission
Protecting People and the Environment

45

Identified in Table 2.1.3-1.

No COL interfaces.

AP1000 Reactor
4.5 Control Rod Drive System
Structural Materials

- SRP Acceptance Criteria
  - Materials Specifications.
  - Austenitic Stainless Steel Components.
  - Other Materials – compatible.
  - Cleaning and Cleanliness Control.

U.S.NRC
United States Nuclear Regulatory Commission
Protecting People and the Environment

46

1. Materials Specifications. The properties of the materials selected for the CRDM should be equivalent to those of Section III, Appendix I, Division 1 of the ASME Code or Section II, Parts A, B, C, and D of the ASME Code. Cold-worked austenitic stainless steels should have a 0.2 percent offset yield strength no greater than 620 MPa (90,000 psi), to reduce the probability of stress corrosion cracking in these systems. Regulatory Guide (RG) 1.85 describes the acceptable code cases that may be used with these specifications.

2. Austenitic Stainless Steel Components. Acceptance criteria include criteria described in SRP Section 5.2.3, Subsections II.4.D and E, and the criteria described below. RG 1.44 describes accepted methods for preventing intergranular corrosion of stainless steel components. Furnace-sensitized material should not be allowed, and methods described in this guide should be followed for cleaning and protecting austenitic stainless steels from contamination during handling, storage, testing, and fabrication and for determining the degree of sensitization during welding. The controls for abrasive work on austenitic stainless steel surfaces should be adequate for preventing contamination that promotes stress corrosion cracking. The final surfaces should meet the acceptance standards specified in ASME NQA-1-1994 Edition, “Quality Assurance Requirements for Nuclear Facilities.” Tools that contain materials that could contribute to stress-corrosion cracking or that, from previous usage, may be contaminated with such materials should not be used on austenitic stainless steel surfaces.

3. Other Materials. All materials for use in this system should be selected for their compatibility with the reactor coolant as described in Articles NB-2160 and NB-3120 of the ASME Code. The tempering temperature of martensitic stainless steels and the aging temperature of precipitation-hardening stainless steels should be specified for assurance that these materials will not deteriorate from stress corrosion cracking in service. Acceptable heat treatment temperatures include aging at 565° - 595°C (1050° - 1100°F) for Type 17-4 PH and 565°C (1050°F) for Type 410 stainless steel.

4. Cleaning and Cleanliness Control. Onsite cleaning and cleanliness control should be in accordance with ASME NQA-1-1994 edition. The oxygen content of the water in vented tanks need not be controlled. Vented tanks with deionized or demineralized water are normal sources of water for final cleaning or flushing of finished surfaces. Halogenated hydrocarbon cleaning agents should not be used.

AP1000 Reactor
4.5 Control Rod Drive System Structural Materials

- SER Evaluation Findings
  - The staff finds the materials, fabrication processes, compatibility of materials, and cleaning and cleanliness controls to be acceptable.
  - The changes made to the AP1000 construction materials and fabrication processes of the VHP nozzles, as compared to current operating reactors, provide for improved resistance to SCC and allow for periodic inspections.
  - The staff concludes that the design of the CRD structural materials is acceptable and meets the requirements of GDC 1, 14, and 26, as well as 10 CFR 50.55a.

U.S.NRC
United States Nuclear Regulatory Commission
Protecting People and the Environment

47

The staff finds the materials, fabrication processes, compatibility of materials, and cleaning and cleanliness controls to be acceptable because they satisfy regulatory requirements or positions described above (for RCPB materials), or because they have been demonstrated to be acceptable based on appropriate materials selections and acceptable operating experience (for non-RCPB materials). The changes made to the AP1000 construction materials and fabrication processes of the VHP nozzles, as compared to current operating reactors, provide for improved resistance to SCC and allow for periodic inspections at least equivalent to those identified in NRC orders issued on February 11, 2003. The staff concludes that the design of the CRD structural materials is acceptable and meets the requirements of GDC 1, 14, and 26, as well as 10 CFR 50.55a.

Emphasize second bullet above; discussion on Davis-Besse and nozzles. Will be covered more during the Engineering Sections. Page 4-30 from SER NUREG-1793.

AP1000 Reactor
4.6 Functional Design of Reactivity Control Systems

- Scope
  - Information for Control Rod Drive System.
  - Evaluations of the Control Rod Drive System.
  - Testing and Verification of the Control Rod Drive System.
  - Information for Combined Performance of Reactivity Systems.
  - Evaluation of Combined Performance.

U.S.NRC
United States Nuclear Regulatory Commission
Protecting People and the Environment

48

Description of the Functional Design of Control Rod Drive System with emphasis.

AP1000 Reactor
4.6 Functional Design of Reactivity Control Systems

- The reactivity control systems are the control rod drive (CRD), the reactor trip system, and the passive core cooling system.
- Capability
  - operate in the full-power mode throughout plant life.
  - vary power level from full power to hot shutdown and have power distributions within acceptable limits level.
  - shut down the reactor to mitigate the effects of postulated events.

U.S.NRC
United States Nuclear Regulatory Commission
Protecting People and the Environment

49

The AP1000 reactivity control systems have the following capabilities to satisfy the various reactivity control conditions for all modes of plant operations:

- the capability to operate in the critical, full-power mode throughout plant life.
- the capability to vary power level from full power to hot shutdown and have power distributions within acceptable limits at any power level.
- the capability to shut down the reactor to mitigate the effects of postulated events, discussed in Chapter 15 of the DCD.

The reactivity control systems are the control rod drive (CRD), the reactor trip system, and the passive core cooling system.

AP1000 Reactor
4.6 Functional Design of Reactivity Control Systems

- ITAAC - Design Commitment
  - The reactor upper internals rod guide arrangement.
  - The control assemblies (rod cluster and grey rod) and drive rod arrangement.
  - The reactor vessel arrangement.
  - The pressure boundary components (RV, CRDMs, incore instrument guide tubes) retain their pressure boundary integrity at their design pressure.
  - The fuel assemblies and rod control cluster assemblies intended for initial core load designed and constructed in accordance with requirements.

U.S.NRC
United States Nuclear Regulatory Commission
Protecting People and the Environment

50

The reactor upper internals rod guide arrangement is as shown in Figure 2.1.3-1.

The control assemblies (rod cluster and grey rod) and drive rod arrangement is as shown in Figure 2.1.3-2.

The reactor vessel arrangement is as shown in Figure 2.1.3-3.

The pressure boundary components (RV, CRDMs, incore instrument guide tubes) retain their pressure boundary integrity at their design pressure.

The fuel assemblies and rod control cluster assemblies intended for initial core load and listed in Table 2.1.3-1 have been designed and constructed in accordance with the established design requirements.

AP1000 Reactor
4.6 Functional Design of Reactivity Control Systems

- SRP Acceptance Criteria
  - CRDS should remain functional and provide reactor shutdown capabilities under adverse environmental conditions and after postulated accidents (GDC 4).
  - CRDS should fail in an acceptable condition (GDC 23).
  - Design of the reactivity control systems should assure that a single malfunction of the CRDS will not result in exceeding acceptable fuel design limits (GDC 25).
  - CRDS should be capable of providing sufficient operational control and reliability during reactivity changes during normal operation and anticipated operational occurrences. (GDC 26).

U.S.NRC
United States Nuclear Regulatory Commission
Protecting People and the Environment

51

1. To meet the requirements of GDC 4, the CRDS should remain functional and provide reactor shutdown capabilities under adverse environmental conditions and after postulated accidents.

2. To meet the requirements of GDC 23, the CRDS should fail in an acceptable condition, even under adverse conditions, that prevents damage to the fuel cladding and excessive reactivity changes during failure.

3. To meet the requirements of GDC 25, the design of the reactivity control systems should assure that a single malfunction of the CRDS will not result in exceeding acceptable fuel design limits.

4. To meet the requirements of GDC 26, the CRDS should be capable of providing sufficient operational control and reliability during reactivity changes during normal operation and anticipated operational occurrences.

AP1000 Reactor
4.6 Functional Design of Reactivity Control Systems

- SRP Acceptance Criteria (continued)
  - Combined capability of CRDS and emergency core cooling system should reliably control the reactivity changes to assure the capability to cool the core under accident conditions (GDC 27).
  - CRDS should be designed to assure that reactivity accidents do not result in damage to the reactor coolant pressure boundary, or result in sufficient damage to the core or support structures so as to significantly impair coolability (GDC 28).
  - CRDS should be designed to ensure an extremely high probability of functioning during anticipated operational occurrences (GDC 29).

U.S.NRC
United States Nuclear Regulatory Commission
Protecting People and the Environment

52

SRP acceptance criteria notes continued.

5. To meet the requirements of GDC 27, the combined capability of CRDS and emergency core cooling system should reliably control the reactivity changes to assure the capability to cool the core under accident conditions.

6. To meet the requirements of GDC 28, the CRDS should be designed to assure that reactivity accidents do not result in damage to the reactor coolant pressure boundary, or result in sufficient damage to the core or support structures so as to significantly impair coolability.

7. The CRDS should be designed to ensure an extremely high probability of functioning during anticipated operational occurrences (GDC 29).

8. To meet the requirements of 10 CFR 50.62(c)(3), BWR plants should have an alternate rod injection system that is diverse and independent from the reactor trip system and should have redundant scram air header exhaust valves.

AP1000 Reactor
4.6 Functional Design of Reactivity Control Systems

- SER Evaluation Findings
  - The CRDS and the passive core cooling system provide the necessary reactivity control and redundancy.
  - These systems provide a reliable means of protecting the control rod assemblies within the reactor core under conditions of normal plant transients or postulated accident conditions.
  - The staff finds that the analysis performed in support of the reactivity control systems satisfies the acceptance criteria of 10 CFR Part 50, Appendix A, (particularly GDC 26, 27, and 28) and, therefore, is acceptable.

U.S.NRC
United States Nuclear Regulatory Commission
Protecting People and the Environment

53

The staff has determined that the CRDS and the passive core cooling system provide the necessary reactivity control and redundancy. These systems also provide a reliable means of protecting the control rod assemblies within the reactor core under conditions of normal plant transients or postulated accident conditions. The staff finds that the analysis performed by the applicant in support of the reactivity control systems satisfies the acceptance criteria of 10 CFR Part 50, Appendix A, (particularly GDC 26, 27, and 28) and, therefore, is acceptable.

AP1000 Engineered Safety Features

Module 3
SER Section 6.2-6.4

INSTRUCTOR: Jack Rosenthal

October 2008

U.S.NRC
United States Nuclear Regulatory Commission
Protecting People and the Environment

Learning Objectives

- Class Participants are expected to understand:
  - Passive containment heat removal.
  - Scope and depth of NRC review.
  - ITAAC and COL items.
  - Regulatory review.
  - SER Evaluation Findings.

U.S.NRC
United States Nuclear Regulatory Commission
Protecting People and the Environment

55

After participating in this training participants should understand the regulatory bases for an acceptable Containment Functional Design, including:

- Containment Pressure/Temperature Response to High-Energy Line Breaks.
- Subcompartment Analysis.
- Mass and Energy Release Analyses for Postulated LOCAs.
- Mass and Energy Release Analysis for Postulated Secondary System Pipe Rupture Inside Containment.
- Minimum Containment Pressure Analysis for Performance Capability Studies of the ECCS.
- Containment Instrumentation Requirements.
- Adequacy of IRWST and Containment Recirculation Screen Performance.

AP1000 Engineered Safety Features

- Scope
  - 6.2 Containment System
  - 6.3 Emergency Core Cooling System
  - 6.4 Control Room Habitability System
  - 6.5 Fission Product removal and Control Systems

U.S.NRC
United States Nuclear Regulatory Commission
Protecting People and the Environment

56

Note that the following sections will be covered later under Engineering

SRP 6.1.1, Engineered Safety Features Materials.
SRP 6.1.2, Protective Coating Systems (Paints) - Organic Materials.
SRP 6.6, Inservice Inspection and Testing of Class 2 and 3 Components.

These areas will be covered next week.

Containment includes:
6.2.1.2 Subcompartment Analysis
6.2.1.3 Mass and Energy Release Analysis for LOCA
6.2.1 Containment Functional Design
6.2.1.4 Mass and Energy Release Analysis for Secondary Side Pipe Rupture
6.2.2 Containment Heat Removal Systems
6.2.3 Secondary Containment Functional Design
6.2.4 Containment Isolation System
6.2.5 Combustible Gas Control in Containment
6.2.5 Containment Leakage Testing
6.2.7 Fracture Prevention of Containment Pressure Boundary

AP1000 Engineered Safety Features

- Passive Safety-Related Systems
  - Use “passive” process only, no active pumps, diesels.
  - One time alignment of valves.
  - No support systems required after actuation.
  - No AC power, cooling water, HVAC, I&C necessary for mitigation.
  - Greatly reduced dependency on operator actions.
  - Mitigate design basis accidents.

U.S.NRC
United States Nuclear Regulatory Commission
Protecting People and the Environment

57

Explain concern that passive systems need to work as designed and analyzed. There is no second chance unlike systems with high and low pressure injection pumps that can be turned on and off. This issue will be discussed more in Chapter 21.

AP1000 consistent with AP 600 design philosophy.

Explain reliance on DC power.

AP1000 Engineered Safety Features

- Passive Decay Heat Removal
  - Natural circulation HX connected to RCS.
- Passive Safety Injection
  - Core makeup tank.
  - Accumulators.
  - IRWST.
  - Automatic Depressurization System.
- Passive Containment Cooling
- Passive Fission Product Removal from Containment Atmosphere

U.S.NRC
United States Nuclear Regulatory Commission
Protecting People and the Environment

58

Ask participants if they are familiar with these systems. If not use backup slides.

AP1000 Engineered Safety Features

- Passive Main Control Room (MCR) Habitability
  - Compressed air pressurization of MCR.
- Passive MCR / I&C Room Cooling
  - Natural circulation to concrete walls / ceiling.
- Passive Containment Hydrogen Control
  - Autocatalytic recombiners.
- Passive Containment pH Control
  - Baskets of Tri Sodium Phosphate flooded by accident.

U.S.NRC
United States Nuclear Regulatory Commission
Protecting People and the Environment

59

Explain that the design philosophy extends to the auxiliary systems listed on the slide. If conventional systems had been used then I E emergency power would have been required.

AP1000 ESF
6.2 Containment

- Steel vessel.
- Concrete shield building.
- Passive heat removal.
- No safety-grade fan coolers and spray.
- Westinghouse uses the WGOTHIC 4.2 to evaluate the containment performance.
  - Internal circulation and heat transfer.
  - External cooling.
- Analysis discussed in Testing and Codes.

U.S.NRC
United States Nuclear Regulatory Commission
Protecting People and the Environment

60

Passive Containment Cooling System. Westinghouse uses the WGOTHIC 4.2 computer program to evaluate the containment performance. FSER Chapter 21 provides a review of WGOTHIC 4.2 and the model used to evaluate containment performance.

AP1000 ESF
6.2 Containment

	AP600	AP1000
Power MWt	1940	3400
Free volume	4.9 E+4 m3	5.8 E+4 m3
Calculated peak internal pressure (design margin)	405.4 kPa (1.5%)	499.84 kPa (1.6%)
Calculated peak external pressure (design margin)	13.8 kPa (33%)	16.6 kPA (17%)
Design Temperature	138 C	149 C

U.S.NRC
United States Nuclear Regulatory Commission
Protecting People and the Environment

61

No secondary containment.
Design leak rate 0.10 weight %/day.
Combustible gas control- autocatalytic recombiners, H2 ignitors.
Passive isolation, AOV or 1E dc motor-operated valves.

AP1000 ESF
6.2 Containment

- Safety Considerations
  - Containment Pressure/Temperature Response to High-Energy Line Breaks.
  - Subcompartment Analysis.
  - M&E Release Analyses for Postulated LOCA.
  - M&E Analysis for Postulated Secondary System Pipe Rupture Inside Containment.
  - Minimum Containment Pressure for ECCS analysis.
  - Adequacy of IRWST and Containment Recirculation Screen Performance.

U.S.NRC
United States Nuclear Regulatory Commission
Protecting People and the Environment

62

DCD describes:

- Containment Pressure/Temperature Response to High-Energy Line Breaks.
- Containment Analytical Model.
- Containment Pressure Response.
- Internal Pressure Analysis.
- Long-Term Internal Pressure Analysis.
- External Pressure Analysis.
- Comparison of NRC Independent Confirmatory Analysis Results with Westinghouse Analysis Results.
- Subcompartment Analysis.
- Selection of Postulated Breaks and Subcompartments.
- Differential Pressure Analysis.
- Mass and Energy Release Analyses for Postulated LOCAs.
- Long-Term Mass and Energy Release Data.
- Energy Sources.
- Blowdown Model.
- Single-Failure Analysis.
- Containment Response Analysis and Initial Conditions.
- Mass and Energy Release Analysis for Postulated Secondary System Pipe Rupture Inside Containment.
- Significant Parameters Affecting Steamline Break Mass and Energy Releases.
- Blowdown Model and Mass and Energy Release Data.
- Minimum Containment Pressure Analysis for Performance Capability Studies of the ECCS.
- Testing and Inspection.
- Containment Instrumentation Requirements.
- Adequacy of IRWST and Containment Recirculation Screen Performance.
- Compliance with Regulatory Requirements
  - 10 CFR 50.34(f)(2)(xvii) and Reg. Guide 1.97 recommendations.
  - 10 CFR 50, Appendix A, GDCs 4, 16, 38, and 50.
  - 10 CFR 50, Appendix K.
  - Reg. Guide 1.82 recommendations.

AP1000 ESF
6.2 Containment

- COL Items
  - Program to limit the amount of debris that might be left in the containment.
  - Evaluation consistent with RG 1.82, Revision 3, and based on the resolution of Generic Safety Issue (GSI) 191, to confirm that adequate long-term core cooling is available. This is an evolving issue.

U.S.NRC
United States Nuclear Regulatory Commission
Protecting People and the Environment

63

The COL applicant will develop a program to limit the amount of debris that might be left in the containment following refueling and maintenance outages.

The COL applicant will perform an evaluation consistent with RG 1.82, Revision 3, and based on the resolution of Generic Safety Issue (GSI) 191, to confirm that adequate long-term core cooling is available considering debris resulting from a loss-of-coolant-accident (LOCA), together with debris that exists before a LOCA.

AP1000 ESF
6.2 Containment

- ITAAC - Design Commitments
  - Function arrangement of CNS.
  - Components, pipe, welds meet ASME.
  - Seismic qualification.
  - Electrical equipment qualification.
  - Electrical power and separation.
  - Displays and control in Main Control Room.
  - Valve actuation and fail safe.

U.S.NRC
United States Nuclear Regulatory Commission
Protecting People and the Environment

64

CNS- Containment System Design Commitment leads to inspections, test, and analysis. Reports on file at plant for many ITAACs.

Table 2.2.1-3 Inspections, Tests, Analyses, and Acceptance Criteria Design Commitment Inspections, Test, Analyses Acceptance Criteria

1. The functional arrangement of the CNS and associated systems is as described in the Design Description of this Section 2.2.1.
2. 2.a) The components identified in Table 2.2.1-1 as ASME Code Section III are designed and constructed in accordance with ASME Code Section III requirements.
3. 2.b) The piping identified in Table 2.2.1-2 as ASME Code Section III is designed and constructed in accordance with ASME Code Section III requirements.
4. 3.a) Pressure boundary welds in components identified in Table 2.2.1-1 as ASME Code Section III meet ASME Code Section III requirements.
5. 3.b) Pressure boundary welds in piping identified in Table 2.2.1-2 as ASME Code Section III meet ASME Code Section III requirements.
6. 4.a) The components identified in Table 2.2.1-1 as ASME Code Section III retain their pressure boundary integrity at their design pressure.
7. 4.b) The piping identified in Table 2.2.1-2 as ASME Code Section III retains its pressure boundary integrity at its design pressure.
8. 5. The seismic Category I equipment identified in Table 2.2.1-1 can withstand seismic design basis loads without loss of structural integrity and safety function.
9. 6.a) The Class 1E equipment identified in Table 2.2.1-1 as being qualified for a harsh environment can withstand the environmental conditions that would exist before, during, and following a design basis accident without loss of safety function for the time required to perform the safety function.
10. 6.b) The Class 1E components identified in Table 2.2.1-1 are powered from their respective Class 1E division.
11. 6.c) Separation is provided between CNS Class 1E divisions, and between Class 1E divisions and non-Class 1E cable.
12. 7. The CNS provides the safety related function of containment isolation for containment boundary integrity and provides a barrier against the release of fission products to the atmosphere.
13. 8. Containment electrical penetration assemblies are protected against currents that are greater than the continuous ratings.
14. 9. Safety-related displays identified in Table 2.2.1-1 can be retrieved in the Main Control Room.
15. 10.a) Controls exist in the Main Control Room to cause those remotely operated valves identified in Table 2.2.1-1 to perform active functions.
16. 10.b) The valves identified in Table 2.2.1-1 as having PMS control perform an active safety function after receiving a signal from the Protection and Safety Monitoring System.
17. 10.c) The valves identified in Table 2.2.1-1 as having Diverse Actuation System control perform an active safety function after receiving a signal from Diverse Actuation System.
18. 11.a) The motor-operated and check valves identified in Table 2.2.1-1 perform an active safety-related function to change position as indicated in the table.
19. 11.b) After loss of motive power, the remotely operated valves identified in Table 2.2.1-1 assume the indicated loss of motive power.

AP1000 ESF
6.2 Containment

- SRP acceptance criteria (representative)
  - GDC 16 and 50 regarding design margin.
  - GDC 38 to rapidly reduce the containment pressure.
  - GDC 38 and 50 with respect to the containment heat removal capability and design margin.
  - GDC 13 and 64, and 10 CFR 50.34(f) instrumentation capable of operating in the post-accident environment.

U.S.NRC
United States Nuclear Regulatory Commission
Protecting People and the Environment

65

GDC 38 to rapidly reduce the containment pressure, the containment pressure should be reduced to less than 50% of the peak calculated pressure for the design basis loss-of-coolant accident within 24 hours after the postulated accident.

GDC 13 and 64, and 10 CFR 50.34(f)2)(xvii) 50.34(f)), instrumentation capable of operating in the post-accident environment.

GDC 13 - Instrumentation and Control
GDC 16 - Containment Design
GDC 38 - Containment Heat Removal
GDC 50 - Containment Design Basis
GDC 64 - Monitoring Radioactivity Releases

AP1000 ESF
6.2 Containment

- SER Evaluation Findings
  - The Westinghouse AP1000 containment evaluation model is based on assumptions that maximize the initial stored energy within containment and minimize the rate of heat transfer from containment.
  - Complies with GDC 16, “Containment Design,” GDC 38, “Containment Heat Removal,” and GDC 50, “Containment Design Basis.”
  - Utilized approved methods.
  - Tested in accordance with 10CFR 52.47(b)(2).

U.S.NRC
United States Nuclear Regulatory Commission
Protecting People and the Environment

66

The Westinghouse AP1000 containment evaluation model is based on assumptions that maximize the initial stored energy within containment and minimize the rate of heat transfer from containment. The approach is consistent with the guidance provided in SRP Section 6.1.1.2.A, “PWR Dry Containments, Including Subatmospheric Containments.” Westinghouse uses the WGOTHIC 4.2 computer program to evaluate the containment performance. Chapter 21 of this report provides a review of WGOTHIC 4.2 and the model used to evaluate containment performance.

Compliance with Appendix A to 10 CFR Part 50 Section 6.2 of the SRP delineates the current guidance for demonstrating that a containment design complies with GDC 16, “Containment Design,” GDC 38, “Containment Heat Removal,” and GDC 50, “Containment Design Basis.” The SRP addresses acceptance criteria and some specific model assumptions for design-basis LOCA and main steamline break (MSLB) analyses for all existing containment types. Westinghouse elected to evaluate the PCS performance using these current guidelines. The Westinghouse documentation for the AP1000 evaluation model is consistent with the guidelines in SRP Sections 6.2.1 and 6.2.1.1.A, as well as RG 1.70, “Standard Format and Content of Safety Analysis Reports for Nuclear Power Plants.” Westinghouse also uses approved methods for the LOCA and MSLB mass and energy releases, and follows the guidance provided in SRP Sections 6.2.1.3 and 6.2.1.4, respectively.

Peak Pressure Criteria (GDC 16 and 50) Acceptance criteria for existing containments include a margin between the design pressure and a conservatively calculated peak accident pressure. NUREG-0800, Section 6.2.1.1.A states that the margin should vary from 10 percent at the construction permit (CP) stage to a peak calculated pressure “less than the containment design pressure” at the operating license (OL) stage. Thus, even in instances in which much data and information are known and the staff possesses an independent, confirmatory calculational capability, a 10-percent margin was expected at the CP stage to cover uncertainties in meeting the requirements of GDC 16 and 50 following final construction (i.e., at the OL stage). For the AP1000 containment, Westinghouse proposed a criterion that the calculated peak accident pressure not exceed the design pressure (a zero-margin criterion). In meeting this criterion, Westinghouse stated that it uses a conservative approach consistent with current staff guidelines. For design certification, under 10 CFR Part 52, the staff does not necessarily need the same demonstration of margin as normally expected at the CP stage. An appropriate initial test program, combined with appropriate inspections, tests, analyses, and acceptance criteria (ITAAC), is in place to assure that the assumptions and performance characteristics of the AP1000 containment and the PCS, as used in the licensing analyses, are verified prior to operation. Therefore, the staff finds the applicant’s approach to be acceptable. The staff reviewed the differences between the AP600 and the AP1000 to assure that the WGOTHIC 4.2 computer program and evaluation model are applicable to the AP1000. This review included the modeling assumptions, the treatment of stratification and circulation, and Engineered Safety Features 6-14 the applicability of the AP600 phenomena identification and ranking table (PIRT), scaling and testing program, and the applicability of the mass and heat transfer correlations for the larger AP1000. Chapter 21 of this report documents the staff’s review.

The staff has determined that the WGOTHIC 4.2 computer program, combined with the conservatively biased evaluation model described in WCAP-15846, Revision 1, ”WGOTHIC Application to AP600 and AP1000,” is acceptable for the evaluation of the peak containment pressure following a DBA for the AP1000 design, as discussed in Chapter 21.6 of this 2400 seconds for a LOCA, and up to about 1000 seconds for an MSLB.

AP1000 ESF
6.2 Containment

- **SER Evaluation Findings Continued**
  - After the peak pressure period, the uncertainty in the treatment of heat transfer processes continues to increase. These uncertainties, resulting from the evaluation model treatment of non-condensable circulation and stratification and the effectiveness of the PCS cooling at a reduced flow rate, are difficult to quantify using the available test data.
  - Nevertheless, the heat removal capability of the AP1000 PCS is sufficiently greater than the decay power to conclude that the containment pressure will decrease.
  - The WGOTHIC analyses demonstrate the effectiveness of the PCS to reduce the containment pressure and maintain that pressure below the design limit.

U.S.NRC
United States Nuclear Regulatory Commission
Protecting People and the Environment

67

Long-Term Pressure Analysis (GDC 38)
The objective of the long-term pressure analysis is to demonstrate that the containment design conforms to the requirements of GDC 38, which requires containment temperature and pressure be maintained at acceptably low levels following any LOCA. In Item II.b of Section 6.2.1.1.A of the SRP, the staff guidance used to evaluate compliance with GDC 38, is that the containment pressure should be reduced to less than 50 percent of its peak value within 24 hours of the occurrence of a design-basis LOCA. This assures that the containment leak rate used for the siting evaluation is consistent with the design basis analysis assumption. Westinghouse proposed that the calculated pressure reduction be based on 50 percent of the design pressure to be consistent with current guidelines related to GDC 38.

The staff found this approach acceptable because the peak calculated pressures are near the design value.

Compliance with 10 CFR 52.47(b)(2)
The unique characteristics of the PCS are explicitly recognized in the regulations governing the evaluation of standard plant designs. As stated in 10 CFR 52.47(b)(2)(i)(A), in the absence of a prototype plant that has been tested over an appropriate range of normal, transient, and accident conditions, the following requirements must be met for a plant that “utilizes simplified, inherent, passive, or other innovative means to accomplish its safety functions”:

(1) The performance of each safety feature of the design has been demonstrated through either analysis, appropriate test programs, experience, or a combination thereof.
(2) Interdependent effects among the safety features of the design have been found acceptable by analysis, appropriate test programs, experience, or a combination thereof.
(3) Sufficient data exist on the safety features of the design to assess the analytical tools used for safety analyses over a sufficient range of normal operating conditions, transient conditions, and specified accident sequences, including equilibrium core conditions.

After the peak pressure period, the uncertainty in the treatment of heat transfer processes continues to increase. These uncertainties, resulting from the evaluation model treatment of non-condensable circulation and stratification and the effectiveness of the PCS cooling at a reduced flow rate, are difficult to quantify using the available test data. Nevertheless, the heat removal capability of the AP1000 PCS (as calculated by the WGOTHIC Evaluation model) is sufficiently greater than the decay power to conclude that the containment pressure will decrease. The WGOTHIC analyses demonstrate the effectiveness of the PCS to reduce the containment pressure and maintain that pressure below the design limit. The system safety function to reduce rapidly, consistent with the functioning of other associated systems, the containment pressure and temperature following any LOCA and maintain them at acceptably low levels has been demonstrated.

AP1000 ESF
6.2.2 Containment Heat Removal

- Passive Containment System (PCS)
- Relies on naturally occurring passive physical phenomena to perform its cooling function.
- Major components of the PCS:
  - Primary containment vessel.
  - Shield building.
  - PCCWST.
  - Air baffle, air inlets, and air diffuser.
  - Water distribution system.

U.S.NRC
United States Nuclear Regulatory Commission
Protecting People and the Environment

68

PCCWST: passive containment cooling water storage tank.

Safety-grade interface to the ultimate heat sink, the shield building, PCCWST, the air baffle, air inlets, and air diffuser, and the water distribution system comprising of a water distribution bucket and distribution weirs. Section 6.2.3 of this report discusses the design of the shield building.

AP1000 ESF
6.2.3 Shield Building

- Structure around the steel containment.
- Protect containment from external hazards, such as tornado missiles, it is not considered to be a secondary containment.
- Seismic Category I reinforced concrete.
- Incorporates Passive Containment Cooling Water Storage Tank above containment vessel and is principle component of PCS.
- Section 3.8 of this report provides the staff's evaluation of the containment and shield building.

U.S.NRC
United States Nuclear Regulatory Commission
Protecting People and the Environment

69

Analyzed only as component of PCS. Structural analysis is shown in Chapter 3.

AP1000 ESF
6.2.4 Containment Isolation System

- Fail-close valves for isolation.
- Isolation valves that must be operable following a DBA or SSE are powered by the Class 1E DC power system.
- Redundant isolation.

U.S.NRC
United States Nuclear Regulatory Commission
Protecting People and the Environment

70

AP1000 ESF
6.2.4 Containment Isolation System

SRP acceptance criteria:

- GDC 54 - Piping systems penetrating containment.
- Redundancy.
- Diversity.
- Fail Safe.
- Leakage.
- Isolation of lines in ESF, safe shutdown, instrument.
- Isolation of vent and purge valves.

U.S.NRC
United States Nuclear Regulatory Commission
Protecting People and the Environment

71

Criterion 54--Piping systems penetrating containment. Piping systems penetrating primary reactor containment shall be provided with leak detection, isolation, and containment capabilities having redundancy, reliability, and performance capabilities which reflect the importance to safety of isolating these piping systems. Such piping systems shall be designed with a capability to test periodically the operability of the isolation valves and associated apparatus and to determine if valve leakage is within acceptable limits.

AP1000 ESF
6.2.4 SER Evaluation Findings

- The staff's review encompassed the following areas specified by Section 6.2.4 of the SRP and 10 CFR 50.34(f)(2)(xiv):
  - CIS design.
  - Protection provided for CISs against loss of function caused by missiles, pipe whip, and natural phenomena.
  - Environmental conditions.
  - Mechanical engineering design criteria.
  - Provisions for alerting operators of the need to isolate manually controlled isolation barriers.

U.S.NRC
United States Nuclear Regulatory Commission
Protecting People and the Environment

72

The staff's review encompassed the following areas specified by Section 6.2.4 of the SRP and 10 CFR 50.34(f)(2)(xiv):

- CIS design.
- the protection provided for CISs against loss of function caused by missiles, pipe whip, and natural phenomena.
- environmental conditions in the vicinity of CISs and equipment and their potential effect.
- the mechanical engineering design criteria applied to isolation barriers and equipment.
- the provisions for alerting operators of the need to isolate manually controlled isolation Barriers.
- the provisions for, and TS pertaining to, operability and leak rate testing of isolation Barriers.
- the calculation of containment atmosphere released prior to isolation valve closure for lines that provide a direct path to the environs containment purging/venting requirements of 10 CFR 50.34(f)(2)(xiv).

AP1000 ESF
6.2.4 SER Evaluation Findings (cont'd)

- The calculation of containment atmosphere released prior to isolation valve closure for lines that provide a direct path to the environs
- Containment purging/venting requirements of 10 CFR 50.34(f)(2)(xiv)
- Provisions for, and TS pertaining to, operability and leak rate testing of isolation barriers

- The staff has determined that the CIS meets the acceptance criteria of Section 6.2.4 of the SRP, including the NUREG-0737 TMI action plan items incorporated into 10 CFR 50.34.

U.S.NRC
United States Nuclear Regulatory Commission
Protecting People and the Environment

73

Findings continued.

AP1000 ESF
6.2.5 Containment Combustible Gas Control

- Hydrogen Ignition – Igniters
- Hydrogen Recombination – Passive
- Containment Atmospheric Mixing - via Natural Circulation
- Hydrogen Concentration Monitoring

U.S.NRC
United States Nuclear Regulatory Commission
Protecting People and the Environment

AP1000 ESF
6.2.5 Containment Combustible Gas Control

- 10 CFR 50.44 - provide systems to control the concentration of hydrogen to accommodate hydrogen equivalent of a 100 percent fuel clad-coolant reaction, while limiting containment hydrogen concentration, with the hydrogen uniformly distributed, to less than 10 percent (by volume), and while maintaining containment structural integrity.

U.S.NRC
United States Nuclear Regulatory Commission
Protecting People and the Environment

75

1. In meeting the requirements of 10 CFR 50.44, and GDC 41 to provide systems to control the concentration of hydrogen in the containment atmosphere, materials within the containment that would yield hydrogen gas due to corrosion from the emergency cooling or containment spray solutions should be identified, and their use should be limited as much as practicable.
2. In meeting the requirements of 10 CFR 50.44, and GDC 41 to provide systems to control the concentration of hydrogen or oxygen in the containment atmosphere, the applicant should demonstrate by analysis, for non-inerted containments, that the design can safely accommodate hydrogen generated by an equivalent of a 100 percent fuel clad-coolant reaction, while limiting containment hydrogen concentration, with the hydrogen uniformly distributed, to less than 10 percent (by volume), and while maintaining containment structural integrity.
3. In meeting the requirements of 10 CFR 50.44(c)(3), regarding equipment survivability, equipment.
4. In meeting the requirements of 10 CFR 50.44, to provide the capability for ensuring a mixed atmosphere in the containment during design bases and significant beyond-design-bases accidents. For passive or combination systems that use convective mixing to mix the combustible gases, the containment internal structures should have design features which promote the free circulation of the atmosphere. For all containment types, an analysis of the effectiveness of the method used for providing a mixed atmosphere should be provided.
5. To satisfy the design requirements of GDC 41:
    A. Performance tests should be performed on system components, such as hydrogen igniters and combustible gas monitors. The tests should support the analyses of the functional capability of the equipment.
    B. Combustible gas control system designs should include instrumentation needed to monitor system or component performance under normal and accident conditions.
6. To satisfy the inspection and test requirements of GDC 41, 42, and 43, combustible gas control systems should be designed with provisions for periodic inservice inspection, operability testing, and leak rate testing.
7. In meeting the requirements of 10 CFR 50.44(c)(5), regarding containment structural integrity, an analysis must demonstrate containment structural integrity.

AP1000 ESF
6.2.5 Containment Combustible Gas Control

- SRP acceptance criteria also addresses:
  - Equipment survivability.
  - Mixed atmosphere.
  - Testing.
  - Instrumentation.

U.S.NRC
United States Nuclear Regulatory Commission
Protecting People and the Environment

76

SRP continued.

AP1000 ESF
6.2.6 Containment Leakage Testing

- Containment Integrated Leakage Rate Type A Tests.
- Containment Penetration Leakage Rate Type B Tests.
- Containment Isolation Valve Leakage Rate Tests.
- Technical Specifications for Containment Leak Rate Testing.

U.S.NRC
United States Nuclear Regulatory Commission
Protecting People and the Environment

77

AP1000 ESF
6.2.6 Containment Leakage Testing

- COL Item
  - The COL applicant will develop and submit a containment leakage rate testing program.

U.S.NRC
United States Nuclear Regulatory Commission
Protecting People and the Environment

78

Emphasize that the COL applicant needs to develop programs.

AP1000 ESF
6.2.6 Containment Leakage Testing

- SRP acceptance criteria:
  - 10 CFR 50 Appendix J, Primary Reactor Containment Leakage Testing for Water-Cooled Power Reactors.
  - RG 1.163, Performance-Based Containment Leak-Test Program.
  - NEI-94-01, Industry Guideline for Implementing Performance-Based Option of 10 CFR 50, App J.
  - Containment Leak Rate Testing Program.

U.S.NRC
United States Nuclear Regulatory Commission
Protecting People and the Environment

79

Containment Leak Rate Testing Program are reviewed in accordance with 10 CFR Part 50, Appendix J. The implementation milestones are as follows:

A. Appendix J, Option A, Section III:

   Type A, B and C test: prior to any reactor operating period.

B. Appendix J, Option B, Section III.A:

   Type A test: after the containment has been completed and is ready for operation.

   Type B and C test: prior to initial criticality.

AP1000 ESF
6.2.7 Fracture Prevention of Containment Pressure Boundary

- Fracture prevention of the containment pressure boundary with emphasis on:
  - Materials Used.
  - Design Standards.
  - Fabrication Requirements.

U.S.NRC
United States Nuclear Regulatory Commission
Protecting People and the Environment

80

AP1000 ESF
6.2.7 Fracture Prevention of Containment Pressure Boundary

- SRP acceptance criteria:
  - To meet GDC 1, 16 and 51, ferritic containment pressure boundary materials should meet the fracture toughness criteria and requirements for testing identified in Article NE-2300 of Section III, Division 1 or Article CC-2520 of Section III, Division 2 of the ASME Code.
  - Metallurgical characterization in lieu of mandatory fracture toughness testing.

U.S.NRC
United States Nuclear Regulatory Commission
Protecting People and the Environment

81

1. To meet the requirements of GDC 1, 16 and 51, ferritic containment pressure boundary materials should meet the fracture toughness criteria and requirements for testing identified in Article NE-2300 of Section III, Division 1 or Article CC-2520 of Section III, Division 2 of the ASME Code or, for materials that were not fracture toughness tested as discussed below, the fracture toughness criteria for Class 2 components identified in the Summer 1977 Addenda to Section III, Division 1, Subsection NC of the ASME Code.

2. Mandatory fracture toughness testing of ASME Code Section III Class 2 materials was first identified in the Summer 1977 Addenda Code Class 2 rules. As a result, cases exist where Class 2 ferritic materials of the reactor containment pressure boundary were not fracture toughness tested, because the ASME Code Edition and Addenda in effect at the time the components were ordered, did not require that they be tested. The staff's assessment of the fracture toughness of materials that were not fracture toughness tested is based on the metallurgical characterization of these materials and fracture toughness data presented in NUREG-0577, “Potential for Low Fracture Toughness and Lamellar Tearing on PWR Steam Generator and Reactor Coolant Pump Supports,” and ASME Code Section III, Summer 1977 Addenda, Subsection NC. The metallurgical characterization of these materials, with respect to their fracture toughness, is developed from a review of how these materials were fabricated and what thermal history they experienced during fabrication. The metallurgical characterization of these materials, when correlated with the data presented in NUREG-0577 and the Summer 1977 Addenda of the ASME Code Section III, provides the technical basis for the staff's evaluation of the compliance with Code Class 2 requirements of the materials which were not fracture toughness tested. Based on the review of the information included in the AP1000 DCD and the fact that the applicant will meet the requirements of Subsection NE-2000 of the ASME Code, Section III, the staff finds that the fracture toughness of the materials of the reactor containment pressure boundary meet the fracture toughness requirements invoked for ASME Code Section III, Subsection NE, Class MC materials. This satisfies the requirements of GDC 51 for fracture prevention of the containment pressure boundary. Meeting the requirements of ASME Code, Section III, also satisfies the requirements of GDC 1 for quality standards and records and GDC 16 for containment design. The staff, therefore, concludes that reasonable assurance will be provided that the materials of the reactor containment pressure boundary, under operating, maintenance, testing, and postulated accident conditions, will not undergo brittle fracture and that the probability of rapidly propagating fracture will be minimized, so that the requirements of GDC 1, 16, and 51 will be met.

AP1000 ESF
6.2.8 In-Containment Refueling Water Storage Tank Hydrodynamic Loads

- IRWST cools the steam/water discharges from the RCS.
- Hydrodynamic loads.
- Spargers provide controlled distribution of steamflow.

U.S.NRC
United States Nuclear Regulatory Commission
Protecting People and the Environment

82

AP1000 ESF
6.2.5 - 6.2.8 SER Evaluation Findings

- SER Evaluation findings:
  - The staff has determined that the containment hydrogen control system meets the requirements of GDC 41 and 10 CFR 50.44, as well as the guidelines of draft RG 1.7, Revision 3.
  - On the basis of its review the staff concludes that the proposed AP1000 containment leakage rate testing program complies with the acceptance criteria of Section 6.2.6 of the SRP.
  - Containment pressure boundary will not undergo brittle fracture and that the probability of rapidly propagating fracture will be minimized.
  - AP600 tests applicable to AP1000 IRWST.
  - Dynamic loads based on testing acceptable.

U.S.NRC
United States Nuclear Regulatory Commission
Protecting People and the Environment

83

The staff has determined that the containment hydrogen control system meets the requirements of GDC 41 and 10 CFR 50.44, as well as the guidelines of draft RG 1.7,
Revision 3.

On the basis of its review the staff concludes that the proposed AP1000 containment leakage rate testing program complies with the acceptance criteria of Section 6.2.6 of the SRP. Compliance with the SRP acceptance criteria provides adequate assurance that containment leaktight integrity can be verified before initial operation and periodically throughout its service life. Compliance with the criteria in Section 6.2.6 of the SRP, as described in this section, constitutes an acceptable basis for satisfying the containment leakage rate testing requirements of GDC 52, GDC 53, and GDC 54, and Appendix J to 10 CFR Part 50.

The staff, therefore, concludes that reasonable assurance will be provided that the materials of the reactor containment pressure boundary, under operating, maintenance, testing, and postulated accident conditions, will not undergo brittle fracture and that the probability of rapidly propagating fracture will be minimized, so that the requirements of GDC 1, 16, and 51 will be met.

For the AP600, the hydrodynamic loads were determined based on tests conducted at the valve and pressure operating related experiments (VAPORE) test facility. The tests were divided into Phase A and Phase B. WCAP-13891, Revision 0, describes the Phase A tests; WCAP-14324 describes the Phase B tests. Phase A tests simulated ADS operation through the submerged sparger to evaluate the hydraulic performance of the sparger under various steamflow rates and to measure pressure pulses resulting from the discharge of steam into the quench tank simulating the IRWST. These results were used to define the dynamic forcing functions generated by the condensation of the steam. This information was used, in turn, to determine the dynamic loads imposed on the actual AP600 IRWST during sparger operation. Phase B tests developed functional requirements and assessed the performance of the ADS valves.

In response to RAI 220.001, Westinghouse stated that the AP600 ADS hydraulic tests were used to define loads on the AP1000 IRWST. Two tests were selected as representative of the sparger discharge pressures. One test simulated the pressure-time history corresponding to the ADS operating beyond 400 seconds after ADS initiation, when the RCS pressure is reduced and significant two-phase flow is discharged through the spargers. The other test simulated a pressure-time history representing the inadvertent opening of the second or third stage of the ADS at full pressure. The latter test is characterized by pure steamflow. The response of the AP1000 IRWST to these time-history forcing functions is discussed in reference to RAI 220.009.Westinghouse states that the time histories from these two tests are applicable to the AP1000 because the ADS valves and the ADS piping and spargers are identical for both the AP600 and the AP1000 designs. The valve opening times, flow areas, and fluid conditions are also the same. The ADS flow rate for the two-phase flow test is bounded by the value used for the AP1000 design. For the single-phase flow test, the important time is the initial time; the fluid conditions are similar. Because the designs are identical and the fluid conditions for the tests used to determine the loads are bounding in one case and similar in the other, the staff finds the hydrodynamic loads on the IRWST for the AP1000 to be acceptable. See - “SER evaluation findings.”

AP1000 Engineered Safety Features and Fire Protection

Module 4
SER Section 6.3-6.5
SER Section 9.5

INSTRUCTOR: Jack Rosenthal

October 2008

U.S.NRC
United States Nuclear Regulatory Commission
Protecting People and the Environment

Learning Objectives (for ESF)

- Class Participants are expected to understand:
  - Passive safety features.
  - Requirements.
  - ITAAC and COL items.
  - Regulatory review.

U.S.NRC
United States Nuclear Regulatory Commission
Protecting People and the Environment

85

After participating in this training participants should understand the regulatory bases for an acceptable Containment Functional Design, including:

- Containment Pressure/Temperature Response to High-Energy Line Breaks.
- Subcompartment Analysis.
- Mass and Energy Release Analyses for Postulated LOCAs.
- Mass and Energy Release Analysis for Postulated Secondary System Pipe Rupture Inside Containment.
- Minimum Containment Pressure Analysis for Performance Capability Studies of the ECCS.
- Containment Instrumentation Requirements.
- Adequacy of IRWST and Containment Recirculation Screen Performance.

AP1000 Engineered Safety Features

- Scope
  - 6.3 Passive Core Cooling (PXS)
  - 6.5.2 Containment Spray System
  - 6.5.3 Fission Product Control Systems

U.S.NRC
United States Nuclear Regulatory Commission
Protecting People and the Environment

86

Other aspects of SRP 6.5 and SRP 6.6, Inservice Inspection and Testing of Class 2 and 3 Components are discussed during this workshop next week.

AP1000 ESF
6.3 Passive Core Cooling System

- PXS
  - Accumulator.
  - Core makeup tank (CMT).
  - In-containment refueling water storage tank (IRWST).
  - Passive residual heat removal (PRHR).
- ADS
  - Part of the reactor coolant system (RCS).
  - Supports passive core cooling functions.

U.S.NRC
United States Nuclear Regulatory Commission
Protecting People and the Environment

87

The Passive Core Cooling System (PXS) maintains core cooling by utilizing three sources of water: Core Makeup Tanks (CMTs), accumulators, and an In-containment Refueling Water Storage Tank (IRWST) [refer to figure on next slide]. Two CMTs are designed to accommodate small leaks in the RCS, using gravity as a driving force. The CMTs are also used during large break loss-of-coolant accidents (LOCAs) to rapidly reflood the reactor core. Two accumulators are designed to meet the need for higher initial makeup flows during large LOCAs. Gas pressure forces open check valves that normally isolate the accumulators from the RCS.

AP1000 Passive Core Cooling System

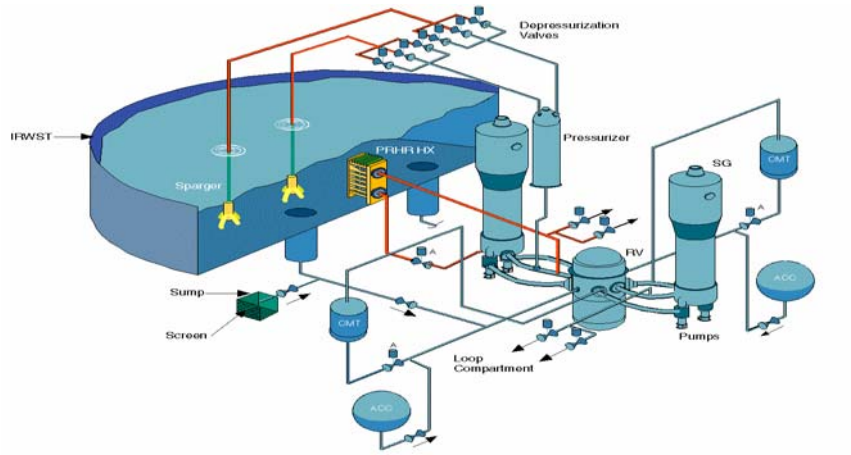

U.S.NRC
United States Nuclear Regulatory Commission
Protecting People and the Environment

88

AP1000 ESF
6.3 Passive Core Cooling System

- Emergency core decay heat removal.
  - Provide core decay heat removal during transients, accidents or whenever the normal heat removal paths are lost.
- Reactor coolant system emergency makeup and boration.
- Provide RCS makeup and boration during transients or accidents when the CVS is unavailable or is insufficient.

U.S.NRC
United States Nuclear Regulatory Commission
Protecting People and the Environment

89

- Emergency core decay heat removal:

  Provide core decay heat removal during transients, accidents or whenever the normal heat removal paths are lost. This heat removal function is available at reactor coolant system conditions including shutdowns. During refueling operations, when the IRWST is drained into the refueling cavity, other passive means of core decay heat removal are utilized.

- Reactor coolant system emergency makeup and boration:

  Provide reactor coolant system makeup and boration during transients or accidents when the normal reactor coolant system makeup supply from the chemical and volume control system is unavailable or is insufficient.

AP1000 ESF
6.3 Passive Core Cooling System

- Safety injection
  - Provide safety injection to the reactor coolant system for core cooling for range of LOCAs up to double-ended rupture of the coolant system piping.
- Containment pH control
  - Provide chemical addition to the containment during post-accident conditions to establish floodup chemistry.

U.S.NRC
United States Nuclear Regulatory Commission
Protecting People and the Environment

90

- Safety injection

  Provide safety injection to the reactor coolant system to provide adequate core cooling for the complete range of loss of coolant accidents, up to and including the double-ended rupture of the largest primary loop reactor coolant system piping.

- Containment pH control

  Provide for chemical addition to the containment during post-accident conditions to establish floodup chemistry conditions that support radionuclide retention with high radioactivity in containment and to prevent corrosion of containment equipment during long-term floodup conditions.

  The passive core cooling system is designed to operate without the use of active equipment such as pumps and ac power sources. The passive core cooling system depends on reliable passive components and processes such as gravity injection and expansion of compressed gases. The passive core cooling system does require a one-time alignment of valves upon actuation of the specific components.

AP1000 ESF
6.3 Passive Core Cooling System

- ITAAC - Design Commitment.
  - PXS provides containment isolation.
  - PXS provides decay heat removal.
  - PXS provides makeup and boration.
  - PXS provides ph control in containment.
  - PXS cools containment in severe accident.
  - Diversity of discharge check valves.
  - Thermal lag for H2 burns.

U.S.NRC
United States Nuclear Regulatory Commission
Protecting People and the Environment

91

Inspections, Tests, Analyses, and Acceptance Criteria Design Commitment:

8.a) The PXS provides containment isolation of the PXS lines penetrating the containment.

8.b) The PXS provides core decay heat removal during design basis events.

8.c) The PXS provides RCS makeup, boration, and safety injection during design basis events.

8.d) The PXS provides pH adjustment of water flooding the containment following design basis accidents.

9.a) The PXS provides a function to cool the outside of the reactor vessel during a severe accident.

9.b) The accumulator discharge check valves are of a different check valve type than the CMT discharge check valves. [specific valve numbers removed]

9.c) The equipment listed in Table 2.2.3-6 has sufficient thermal lag to withstand the effects of identified hydrogen burns associated with severe accidents.

AP1000 ESF
6.3 Passive Core Cooling System

- COL Items
  - Program to limit the amount of debris that might be left in the containment following refueling and maintenance outages.
  - Evaluation consistent with RG 1.82, Revision 3, and based on the resolution of Generic Safety Issue (GSI) 191, to confirm that adequate long-term core cooling.

U.S.NRC
United States Nuclear Regulatory Commission
Protecting People and the Environment

92

FSER Item 6.2.1.8.1-1: The COL applicant will develop a program to limit the amount of debris that might be left in the containment following refueling and maintenance outages.

FSER Item 6.2.1.8.2-1 states regarding DCD, Revision 15, Section 6.3.8.2: The COL applicant will perform an evaluation consistent with RG 1.82, Revision 3, and based on the resolution of Generic Safety Issue (GSI) 191, to confirm that adequate long-term core cooling is available considering debris resulting from a loss-of-coolant-accident (LOCA), together with debris that exists before a LOCA.

In DCD, Revision 16, Section 6.3.8.2 states: The Combined License information requested in this subsection has been fully addressed in APP-GW-GLR-079, and the applicable changes are incorporated into the DCD. No additional work is required by the Combined License applicant to address the aspects of the Combined License information requested in this subsection.

AP1000 ESF
6.3 Passive Core Cooling System

SRP acceptance criteria:

- Single failure, electrical dependency, inspection, dynamic loads, SRP aspects applicable to passive plant.
- SECY-94-084 - passive advanced reactor designs need not assume passive component failures in addition to the initiating failure in the application of single-failure criterion. Check valves in the passive safety systems are subject to single-failure consideration.

U.S.NRC
United States Nuclear Regulatory Commission
Protecting People and the Environment

93

SECY-94-084 states the approved position that passive advanced light-water reactor designs need not assume passive component failures in addition to the initiating failure in the application of single-failure criterion to assure safety of the plant. In addition, the staff considers, on a long-term basis, passive component failures in fluid as potential accident initiators, in addition to initiating events. Check valves in the passive safety systems (except those for which proper function can be demonstrated and documented) are considered components subject to single-failure consideration.

AP1000 ESF
6.3 Passive Core Cooling System

- SER Evaluation Findings
  - GDC 2 - The PXS is designed to seismic Category 1 requirements.
  - GDC 4 - The PXS design for water hammer and dynamic loads.
  - GDC 5 - The PXS is designed for a single NPP, and is not shared between units.
  - GDC 17 - The PXS performs without onsite or offsite ac power.
  - GDC 27, 34, and 35 - Safety analyses of transients and accidents with the most reactive control rod stuck.
  - GDC 36 and 37 - The PXS systems and components are designed for periodic inspection and testing.

U.S.NRC
United States Nuclear Regulatory Commission
Protecting People and the Environment

94

The staff concludes that the AP1000 PXS design meets the guidelines of SRP Section 6.3 and the requirements of the following GDC:

- GDC 2—The PXS is designed to meet the seismic Category 1 requirements and remain functional following an SSE.

- GDC 4—The PXS design incorporates features that preclude water hammer and excessive dynamic loads.

- GDC 5—The PXS is designed for a single NPP, and is not shared between units.

- GDC 17—The PXS performs its functions without relying on onsite or offsite ac power. The effects of loss of offsite power on the RCP trip and the results of the design-basis events are considered in the safety analyses which demonstrate the ability of the AP1000 to meet the acceptance criteria.

- GDC 27, 34, and 35—Safety analyses of the design-basis transients and accidents were performed with the assumption of the most reactive control rod stuck out of the core, and the results demonstrate that the PXS provides sufficient capability to remove residual heat and provide abundant core cooling so that (1) the specified acceptable fuel design limits and the design conditions of the RCS pressure boundary are not exceeded, and (2) the acceptance criteria specified in 10 CFR 50.46 for LOCAs are met.

- GDC 36 and 37—The PXS systems and components are designed to permit periodic inspection and testing of the operability of the system throughout the life of the plant.

AP1000 ESF
6.5.2 Containment Spray System

- The AP1000 design does not include a safety-related containment spray system.
- The fire protection system (FPS) provides a nonsafety-related containment spray system for severe accident management.
- Removal of airborne activity is by natural processes.

U.S.NRC
United States Nuclear Regulatory Commission
Protecting People and the Environment

95

The AP1000 design does not have a safety-related containment spray system. The AP1000 design does include a non-safety-related containment spray as part of the FPS, and which is used to enhance the natural removal mechanisms in the unlikely event of a severe accident. The containment isolation portion of the FPS spray system is safety-related. The FPS containment spray header is classified as Seismic category II.

Removal of airborne activity is by natural processes that do not depend on sprays (that is sedimentation, diffusiophoresis, and thermophoresis).

AP1000 ESF
6.5.2 Containment Spray System

- ITAAC
  - Design Commitment - The FPS provides nonsafety-related containment spray for severe accident management.
  - Inspection-containment spray headers.
- COL items
  - None.

U.S.NRC
United States Nuclear Regulatory Commission
Protecting People and the Environment

96

Table 2.3.4-2 (cont.) Inspections, Tests, Analyses, and Acceptance Criteria Design Commitment

The FPS provides nonsafety-related containment spray for severe accident management. Inspection of the containment spray headers will be performed. The FPS has spray headers and nozzles as follows:

At least 44 nozzles at plant elevation of at least 260 feet, and 24 nozzles at plant elevation of at least 275 feet.

AP1000 ESF
6.5.2 Containment Spray System

- SRP acceptance criteria:
  - Requirements of GDC 41, 42, and 43.
  - Testing and technical specifications.

U.S.NRC
United States Nuclear Regulatory Commission
Protecting People and the Environment

97

SRP 6.5.2 presents containment spray system acceptance criteria necessary to meet the relevant requirements of GDC 41, 42, and 43, as well as testing and technical specification acceptance criteria. However, since the AP1000 containment spray system is non-safety related, and is not relied upon to meet any regulatory requirements, the SRP 6.5.2 acceptance criteria are not applicable.

Non-safety spray system satisfies the staff's recommendation in SECY-97-044.

AP1000 ESF
6.5.2 Containment Spray System

- SER Evaluation Findings
  - AP1000 containment spray system is non-safety related, and is not relied upon to meet any regulatory requirements.
  - SRP 6.5.2 criteria are not applicable.

U.S.NRC
United States Nuclear Regulatory Commission
Protecting People and the Environment

98

AP1000 ESF
6.5.3 Fission Product Control Systems

- The containment atmosphere is depleted of elemental iodine and particulates as a result of naturally occurring passive removal processes.
  - [e.g., elemental iodine deposition and aerosol sedimentation, diffusiophoresis, and thermophoresis].

U.S.NRC
United States Nuclear Regulatory Commission
Protecting People and the Environment

99

No active fission product control systems are required in the AP1000 design to meet regulatory requirements. The containment atmosphere is depleted of elemental iodine and particulates as a result of naturally occurring passive removal processes (e.g., elemental iodine deposition and aerosol sedimentation, diffusiophoresis, and thermophoresis), discussed in DCD Appendix 15B. Although technically not a design, the AP1000 relies solely on enhanced natural processes for fission product removal, whereas existing plants utilize an internal containment spray system and other fission product control features to accomplish this removal.

No ITAAC.
No COL.
No applicable SRP.

SECY-97-044, Policy and Key Technical Issues Pertaining to the Westinghouse AP600 Standardized Passive Reactor Design.

AP1000 ESF
6.5.3 Fission Product Control Systems

- SER Evaluation Findings
  - The AP1000 has no active system to control fission products in the containment following a postulated accident. The only fission product control system is the primary containment.
  - The AP1000 design does not require active fission product control systems to meet the regulatory requirements (dose limits in 10 CFR 50.34).
  - These natural fission product control mechanisms and the limited containment leakage result in offsite doses that are less than those specified in 10 CFR 50.34.

U.S.NRC
United States Nuclear Regulatory Commission
Protecting People and the Environment

100

The AP1000 has no active system to control fission products in the containment following a postulated accident. The only fission product control system is the primary containment. DCD Tier 2, Appendix 15B discusses satisfactory removal of airborne activity (elemental iodine and particulates) from the containment atmosphere by natural removal processes (e.g., deposition and sedimentation) without the use of containment spray. The AP1000 design does not require active fission product control systems to meet the regulatory requirements (dose limits in 10 CFR 50.34). These natural fission product control mechanisms and the limited containment leakage result in offsite doses that are less than those specified in 10 CFR 50.34.

AP1000 Fire Protection

- 9.5.1 - Fire Protection Program
- 9.5.2 - Communication Systems
- 9.5.3 - Lighting Systems
- 9.5.4 - Standby Diesel Generator

U.S.NRC
United States Nuclear Regulatory Commission
Protecting People and the Environment

101

Explain the transition from ESF to Fire Protection.

AP1000 Fire Protection

- Learning Objectives (for Fire Protection):
  - Understand scope and extent of fire protection program.
  - Understand function of standby EDG.
  - Understand depth of NRC staff review.

U.S.NRC
United States Nuclear Regulatory Commission
Protecting People and the Environment

102

Emphasize detail of NRC review.

AP1000
9.5.1 Fire Protection Program

- Fire Barriers.
- Fire Detection and Suppression.
- Fire Brigade.
- Combustible Control.
- Safe Shutdown.

U.S.NRC
United States Nuclear Regulatory Commission
Protecting People and the Environment

103

Fire program scope:

Before the Browns Ferry fire in the 1970s, the NRC assumed commercial protection was adequate. Following the fire, the NRC established its own rules and programs. Continued cooperation with Fire Insurers and NIST.

AP1000
9.5.1 Fire Protection Program

- Enhanced level of fire protection
  - The FP review criteria for the AP1000 are specified in SECY-90-016, “Evolutionary Light Water Reactor (LWR) Certification Issues and Their Relationship to Current Regulatory Requirements.”
  - SECY-93-087, “Policy, Technical, and Licensing Issues Pertaining to Evolutionary and Advanced Light-Water Reactor Designs,” and SECY-94-084, “Policy and Technical Issues Associated with the Regulatory Treatment of Non-Safety Systems in Passive Plant Designs.”
  - 10 CFR 50.48, “Fire Protection,” and GDC 3, “Fire Protection.”

U.S.NRC
United States Nuclear Regulatory Commission
Protecting People and the Environment

104

The fire protection (FP) system detects and suppresses fires and is an integral part of the AP1000 FP program. The FP review criteria for the AP1000 are specified in SECY-90-016, “Evolutionary Light Water Reactor (LWR) Certification Issues and Their Relationship to Current Regulatory Requirements,” SECY-93-087, “Policy, Technical, and Licensing Issues Pertaining to Evolutionary and Advanced Light-Water Reactor Designs,” and SECY-94-084, “Policy and Technical Issues Associated with the Regulatory Treatment of Non-Safety Systems in Passive Plant Designs.” In addition, 10 CFR 52.48 specifies that the design will comply with the requirements specified in 10 CFR 50.48, “Fire Protection,” and GDC 3, “Fire Protection.” Conformance with the SRP is addressed in 10 CFR 50.34(g), which specifies that applications include an evaluation of the facility against the SRP. BTP Chemical and Mechanical Engineering Branch (CMEB) 9.5-1, “Guidelines for Fire Protection for Nuclear Power Plants,” provides the FP guidance for nuclear power plants specified in the SRP.

AP1000
9.5.1 Fire Protection Program

- The fire suppression systems inside the containment and outlying buildings are subject to a single active failure. This is not consistent with the guidance specified in BTP CMEB 9.5-1.
- The fire suppression systems located inside the containment are qualified to seismic Category I criteria. The buildings outside containment do not contain safety-related equipment.
- Manual fire suppression capability using hose lines connected to the outside hydrants of the yard main can be provided in the event of a failure of the interior fire suppression systems.
- On the basis of the seismic qualification of the fire suppression system located inside containment, the absence of safety-related equipment in the outlying buildings, and the manual suppression capability using the outside hydrants, the staff concludes that this
- Alternative means of fire protection is acceptable.

U.S.NRC
United States Nuclear Regulatory Commission
Protecting People and the Environment

105

The fire suppression systems located inside the containment and outlying buildings are subject to a single active failure or crack that could impair both the primary and backup fire suppression capabilities. This is not consistent with the guidance specified in BTP CMEB 9.5-1. The fire suppression systems located inside the containment are qualified to seismic Category I criteria, which reduces the potential for a failure of the system. The buildings outside containment do not contain safety-related equipment or present an exposure hazard to structures containing safety-related equipment. Manual fire suppression capability using hose lines connected to the outside hydrants of the yard main can be provided in the event of a failure of the interior fire suppression systems. On the basis of the seismic qualification of the fire suppression system located inside containment, the absence of safety-related equipment in the outlying buildings, and the manual suppression capability using the outside hydrants, the staff concludes that this alternative means of fire protection is acceptable.

AP1000
9.5.1 Fire Protection Program

- ITAAC
  - Functional arrangement of the FPS.
  - Seismic qualification.
  - Containment isolation of FPS.
  - Manual fire fighting capability.
  - Displays of parameters in MCR.
  - The FPS provides non-safety-related containment spray for severe accident management.
  - The FPS provides two fire water storage tanks, each 300,000 gallons of water.
  - Two FPS fire pumps provide at least 2000 gpm each.
  - The fuel tank for the diesel-driven fire pump holds 240 gallons.
  - Fire detectors.
  - The FPS seismic standpipe can be supplied from the FPS fire main.

U.S.NRC
United States Nuclear Regulatory Commission
Protecting People and the Environment

106

Table 2.3.4-2 Inspections, Tests, Analyses, and Acceptance Criteria

1. The functional arrangement of the FPS is as described in the Design Description of this Section 2.3.4.
2 The FPS piping identified in Table 2.3.4-4 remains functional following a safe shutdown earthquake.
3. The FPS provides the safety-related function of preserving containment integrity by isolation of the FPS line penetrating the containment.
4. The FPS provides for manual fire fighting capability in plant areas containing.
5. Displays of the parameters identified in Table 2.3.4-1 can be retrieved in the MCR.
6. The FPS provides non-safety-related containment spray for severe accident management.
7. The FPS provides two fire water storage tanks, each capable of holding at least 300,000 gallons of water.
8. Two FPS fire pumps provide at least 2000 gpm each at a total head of at least 300 ft.
9. The fuel tank for the diesel-driven fire pump is capable of holding at least 240 gallons.
10. Individual fire detectors provide fire detection capability and can be used to initiate fire alarms in areas containing safety-related equipment.
11. The FPS seismic standpipe subsystem can be supplied from the FPS fire main by opening the normally closed cross-connect valve to the FPS plant fire main.

FSER Item DCD Table 1.8-2 DCD Section Description

9.5.1-1(a) 9.5-19.5.1.8 The COL applicant will establish a fire protection program at the facility for the protection of structures, systems, and components (SSCs) important to safety. The COL applicant will also establish the procedures, equipment, and personnel needed to implement the program.
9.5.1-1(b)9.5-39.5.1.8,Table 9.5.1-1 The COL applicant will implement the fire protection program prior to receiving fuel onsite for fuel storage areas, and for the entire unit prior to reactor startup.
9.5.1-1(c)9.5-39.5.1.8,Table 9.5.1-1 The COL applicant will establish administrative controls to maintain the performance of the fire protection system and personnel.
9.5.1-1(d)9.5-39.5.1.8,Table 9.5.1-1 The COL applicant will establish a site fire brigade that is trained and equipped for fire fighting to ensure adequate manual fire fighting capability for all plant areas containing SSCs important to safety.
9.5.1-1(e)9.5-39.5.1.8,Table 9.5.1-1 The COL applicant will establish a quality assurance (QA) program to ensure that the guidelines for the design, procurement, installation, and testing, as well as the administrative controls for fire protection systems are satisfied.
9.5.1-1(f)9.5-39.5.1.8,Table 9.5.1-1 The COL applicant is responsible for the inspection and maintenance of fire doors, access to keys for the fire brigade, and the marking of exit routes.
9.5.1-1(g)9.5-39.5.1.8,Table 9.5.1-1 The COL applicant is responsible for the collection and sampling of water drainage from areas that may contain radioactivity.
9.5.1-1(h)9.5-39.5.1.8,Table 9.5.1-1 The COL applicant is responsible for controlling the use of compressed gases inside structures.
9.5.1-1(i)9.5-39.5.1.8,Table 9.5.1-1 The COL applicant is responsible for the use of portable radio communication by the plant fire brigade.
9.5.1-1(j)9.5-39.5.1.8,Table 9.5.1-1 The COL applicant is responsible for fire protection inside containment during refueling and maintenance.
9.5.1-1(k)9.5-39.5.1.8,Table 9.5.1-1 The COL applicant is responsible for controlling combustible materials in the remote shutdown workstation.
9.5.1-1(l)9.5-39.5.1.8,Table 9.5.1-1 The COL applicant is responsible for fire protection for cooling towers.
9.5.1-1(m)9.5-39.5.1.8,Table 9.5.1-1 The COL applicant is responsible for the proper storage of welding gas cylinders.
9.5.1-1(n)9.5-39.5.1.8,Table 9.5.1-1 The COL applicant is responsible for the proper storage of ion exchange resins.
9.5.1-1(o)9.5-39.5.1.8,Table 9.5.1-1 The COL applicant is responsible for the proper storage of hazardous chemicals.
9.5.1-29.5-29.5.1.8 The COL applicant will provide site-specific fire protection analysis information for the yard area, the administration building, and other outlying buildings.
9.5.1-39.5-79.5.1.8 The COL applicant will establish procedures to address a fire watch for fire areas breached during maintenance.
9.5.1-49.5-59.5.1.8 The COL applicant will provide an analysis to demonstrate that operator actions that minimize the potential for spurious actuation of the automatic depressurization systems (ADS) as a result of a fire can be accomplished within 30 minutes following detection of the fire, as well as the procedure for manual actuation of the fire water containment supply isolation valve to allow fire water to reach the automatic fire system in the containment maintenance floor.
9.5.1-59.5-49.5.1.8 The COL applicant is responsible for ensuring that any deviations from the applicable National Fire Protection Association (NFPA) codes and standards in addition to those in the DCD, are incorporated into the final safety analysis report (FSAR) with appropriate technical justification.9.5.1-69.5-69.5.1.8The COL applicant will establish the process for identifying deviations between the as-built installation of fire barriers and their tested configurations.
9.5.1-79.5-89.5.1.8 The COL applicant will provide 2-hour fire resistance test data in accordance with American Society for Testing and Materials (ASTM) Standard E-119 and NFPA 251 for the composite material selected for stairwell fire barriers.

AP1000
9.5.1 Fire Protection Program

- COL Items
  - General
    - Establish and implement program. Administrative controls.
    - Site fire brigade that is trained and equipped.
    - Control of flammable materials and hazardous chemicals.
    - (QA) program, Inspection and maintenance.
  - AP1000 Specific
    - Demonstrate that operator actions minimize the potential for spurious actuation of the ADS as a result of a fire.
    - Procedure for manual actuation of the fire water containment supply isolation valve.

U.S.NRC
United States Nuclear Regulatory Commission
Protecting People and the Environment

107

9.5.1-1(a)9.5-19.5.1.8 The COL applicant will establish a fire protection program at the facility for the protection of structures, systems, and components (SSCs) important to safety. The COL applicant will also establish the procedures, equipment, and personnel needed to implement the program.
9.5.1-1(b)9.5-39.5.1.8, Table 9.5.1-1 The COL applicant will implement the fire protection program prior to receiving fuel onsite for fuel storage areas, and for the entire unit prior to reactor startup.
9.5.1-1(c)9.5-39.5.1.8, Table 9.5.1-1 The COL applicant will establish administrative controls to maintain the performance of the fire protection system and personnel.
9.5.1-1(d)9.5-39.5.1.8, Table 9.5.1-1 The COL applicant will establish a site fire brigade that is trained and equipped for fire fighting to ensure adequate manual fire fighting capability for all plant areas containing SSCs important to safety.
9.5.1-1(e)9.5-39.5.1.8, Table 9.5.1-1 The COL applicant will establish a quality assurance (QA) program to ensure that the guidelines for the design, procurement, installation, and testing, as well as the administrative controls for fire protection systems are satisfied.
9.5.1-1(f)9.5-39.5.1.8, Table 9.5.1-1 The COL applicant is responsible for the inspection and maintenance of fire doors, access to keys for the fire brigade, and the marking of exit routes.
9.5.1-1(g)9.5-39.5.1.8, Table 9.5.1-1 The COL applicant is responsible for the collection and sampling of water drainage from areas that may contain radioactivity.
9.5.1-1(h)9.5-39.5.1.8, Table 9.5.1-1 The COL applicant is responsible for controlling the use of compressed gases inside structures.
9.5.1-1(i)9.5-39.5.1.8, Table 9.5.1-1 The COL applicant is responsible for the use of portable radio communication by the plant fire brigade.
9.5.1-1(j)9.5-39.5.1.8, Table 9.5.1-1 The COL applicant is responsible for fire protection inside containment during refueling and maintenance.
9.5.1-1(k)9.5-39.5.1.8, Table 9.5.1-1 The COL applicant is responsible for controlling combustible materials in the remote shutdown workstation.
9.5.1-1(l)9.5-3
9.5.1.8, Table 9.5.1-1 The COL applicant is responsible for fire protection for cooling towers.
9.5.1-1(m)9.5-39.5.1.8,Table 9.5.1-1 The COL applicant is responsible for the proper storage of welding gas cylinders.
9.5.1-1(n)9.5-39.5.1.8, Table 9.5.1-1 The COL applicant is responsible for the proper storage of ion exchange resins.
9.5.1-1(o)9.5-39.5.1.8, Table 9.5.1-1 The COL applicant is responsible for the proper storage of hazardous chemicals.
9.5.1-29.5-29.5.1.8 The COL applicant will provide site-specific fire protection analysis information for the yard area, the administration building, and other outlying buildings.
9.5.1-39.5-79.5.1.8 The COL applicant will establish procedures to address a fire watch for fire areas breached during maintenance.
9.5.1-49.5-59.5.1.8 The COL applicant will provide an analysis to demonstrate that operator actions that minimize the potential for spurious actuation of the automatic depressurization systems (ADS) as a result of a fire can be accomplished within 30 minutes following detection of the fire, as well as the procedure for manual actuation of the fire water containment supply isolation valve to allow fire water to reach the automatic fire system in the containment maintenance floor.
9.5.1-59.5-49.5.1.8 The COL applicant is responsible for ensuring that any deviations from the applicable National Fire Protection Association (NFPA) codes and standards in addition to those in the DCD, are incorporated into the final safety analysis report (FSAR) with appropriate technical justification.
9.5.1-69.5-69.5.1.8 The COL applicant will establish the process for identifying deviations between the as-built installation of fire barriers and their tested configurations.
9.5.1-79.5-89.5.1.8 The COL applicant will provide 2-hour fire resistance test data in accordance with American Society for Testing and Materials (ASTM) Standard E-119 and NFPA 251 for the composite material selected for stairwell fire barriers.

AP1000
9.5.1 Fire Protection Program

- SRP acceptance criteria:
  - 10 CFR 50.48, Fire Protection.
  - RG 1.189, Revision 1, “Fire Protection for Nuclear Power Plants,” which provides comprehensive staff positions and guidelines on fire protection for nuclear power plants.
  - SECY 90-016 established enhanced fire protection criteria for evolutionary light water reactors.
  - SECY 93-087 recommended that the enhanced criteria be extended to include passive reactor designs.

U.S.NRC
United States Nuclear Regulatory Commission
Protecting People and the Environment

108

RG 1.189, Revision 1, “Fire Protection for Nuclear Power Plants,” which provides comprehensive staff positions and guidelines on fire protection for nuclear power plants.

Enhanced fire protection criteria for new reactor designs as documented in SECY 90-016, SECY 93-087, and SECY 94-084. SECY 90-016 established enhanced fire protection criteria for evolutionary light water reactors. SECY 93-087 recommended that the enhanced criteria be extended to include passive reactor designs. SECY 90-016 and SECY 93-087 were approved by the Commission in staff requirements memoranda (SRM). SECY 94-084, in part, establishes criteria defining safe-shutdown conditions for passive light water reactor designs.

AP1000
9.5.1 Fire Protection Program

- SER Evaluation Findings:
  - Safe shutdown following a fire is defined for the AP1000 as the ability to achieve and maintain the RCS temperature below 215.6 C. This is a departure from the BTP CMEB 9.5-1 criteria applied to the evolutionary plant designs in which safe shutdown for fires applies to both hot and cold shutdown capability.
  - To enhance the survivability of the normal safe shutdown and cold shutdown capability, automatic suppression will be provided in fire areas outside containment. This is unique to the AP1000, and does not ensure that the normal shutdown capability will be free of fire damage, or that the equipment necessary to achieve and maintain cold shutdown can be repaired within 72 hours.
  - This is consistent with SECY-94-084 and is acceptable because the design utilizes passive safety-related systems as the alternative dedicated safe shutdown.

U.S.NRC
United States Nuclear Regulatory Commission
Protecting People and the Environment

109

The AP1000 criteria for the protection of safe and cold shutdown capability following a single fire in any fire area are as follows:
Safe shutdown following a fire is defined for the AP1000 as the ability to achieve and maintain the RCS temperature below 215.6 C (420 F) without venting the primary coolant from the RCS. This is a departure from the BTP CMEB 9.5-1 criteria applied to the evolutionary plant designs and the existing plants, in which safe shutdown for fires applies to both hot and cold shutdown capability. This position is consistent with SECY-94-084 and, therefore, is acceptable. This is Deviation 9.5.1-3. Cold shutdown for the AP1000 is defined as the ability to achieve and maintain the RCS below 93.3 C (200 F), consistent with the criteria applicable to the evolutionary designs and existing plants and, therefore, is acceptable.

The use of the non-safety-related normal shutdown systems and/or the safety-related passive systems is acceptable to the staff to achieve and maintain safe shutdown following a fire. The safety-related passive systems are considered an alternate/dedicated shutdown method, as described in BTP CMEB 9.5-1, for fire areas where the normal shutdown systems have not been protected in accordance with the guidance prescribed in BTP CMEB 9.5-1. Consistent with the FP criteria for ALWRs specified in SECY-90-016 and SECY-93-087, redundant divisions of these systems shall be separated, such that a fire in any fire area outside of the containment or the MCR will not impair the plant's capability to achieve and maintain safe shutdown as defined above, assuming a loss of all equipment in the affected fire area. Consistent with SECY-90-16, the safe-shutdown analysis may not consider personnel entry into the affected fire area to repair or operate equipment to achieve safe shutdown. Personnel entry into the affected fire area to repair or operate equipment necessary to achieve and maintain cold shutdown of the AP1000 is acceptable, because of the AP1000's unique capability to remain in safe shutdown for an extended period of time using only passive systems.

The criteria in BTP CMEB 9.5-1 concerning cold shutdown capability deviates from the criteria in SECY-93-087, SECY-94-084, and SECY-90-016 when applied to the evolutionary reactor designs, but is consistent with the criteria applicable to existing plants. To enhance the survivability of the normal safe shutdown and cold shutdown capability in the event of a fire, and to reduce the reliance on the infrequently utilized safety-related passive systems, automatic suppression will be provided in those fire areas outside containment where a fire could damage the normal shutdown capability or result in a spurious operation of equipment that could lead to a venting of the RCS. This criterion is unique to the AP1000 advanced reactor designs and does not ensure that the normal shutdown capability will be free of fire damage, or that the equipment necessary to achieve and maintain cold shutdown can be repaired within 72 hours. This is consistent with SECY-94-084 and is acceptable because the design utilizes passive safety-related systems as the alternative dedicated safe shutdown. This is Deviation 9.5.1-4.

AP1000
9.5.2 Communication Systems

- The AP1000 Communication Systems consists of the following:
  - wireless telephone system.
  - telephone/page system.
  - private automatic branch exchange system.
  - sound-powered system.
  - emergency response facility communications.
  - security communication system.

U.S.NRC
United States Nuclear Regulatory Commission
Protecting People and the Environment

110

AP1000
9.5.2 Communication Systems

- ITAAC
  - telephone/page system.
  - sound-powered equipment.
- COL Items
  - provide a description of the emergency offsite communication system, including the crisis management radio system.
  - provide a description of the security communication system.
  - interfaces to offsite locations.

U.S.NRC
United States Nuclear Regulatory Commission
Protecting People and the Environment

111

1.a) The EFS has handsets, amplifiers, loudspeakers, and siren tone generators connected as a telephone/page system.

1.b) The EFS has sound-powered equipment connected as a system.

2.a) The EFS telephone/page system provides intraplant, station-to-station communications and area broadcasting between the MCR and the locations listed in Table 2.3.19-1.

2.b) EFS provides sound-powered communications between the MCR, the RSW, the Division A, B, C, D dc equipment rooms, the Division A, B, C, D I&C rooms, and the diesel generator building without external power.

FSER Item 9.5.2-1: The COL applicant will provide a description of the emergency offsite communication system, including the crisis management radio system.

FSER Item 9.5.2-2: The COL applicant will provide a description of the security communication system.

FSER Item 9.5.2-3: The COL applicant will address interfaces to offsite locations; this will include addressing the recommendations of NRC Bulletin (BL) 80-15 regarding loss of the emergency notification system as a result of a loss of offsite power.

FSER Item 13.6.10-1: The COL applicant will describe its design of the security communication system.

AP1000
9.5.3 Lighting Systems

- The normal lighting provides normal illumination during plant operating, maintenance, and test conditions.
- The emergency lighting provides illumination in areas where emergency operations are performed upon loss of normal lighting.
- The panel lighting in the control room provides illumination at the safety panels.
- The security lighting system is described in separate security documents.

U.S.NRC
United States Nuclear Regulatory Commission
Protecting People and the Environment

112

AP1000
9.5.3 Lighting Systems

- ITAAC
  - Functional arrangement of the ELS.
  - Power for lighting.
  - Lighting fixtures located in the MCR utilize seismic supports.
  - The emergency lighting can provide 10 foot candles at the safety panel and at the workstations in the MCR and at the RSW.

U.S.NRC
United States Nuclear Regulatory Commission
Protecting People and the Environment

113

1. The functional arrangement of the ELS is as described in the Design Description of this Section 2.6.5.

2. The ELS has six groups of emergency lighting fixtures located in the MCR and at the RSW. Each group is powered by one of the Class 1E inverters. The ELS has four groups of panel lighting fixtures located on or near safety panels in the MCR. Each group is powered by one of the Class 1E inverters in Divisions B and C (one 24-hour and one 72-hour inverter in each Division).

3. The lighting fixtures located in the MCR utilize seismic supports.

4. The panel lighting circuits are classified as associated and treated as Class 1E. These lighting circuits are routed with the Divisions B and C Class 1E circuits. Separation is provided between ELS associated divisions and between associated divisions and non-Class 1E cable.

5. The normal lighting can provide 50 foot candles at the safety panel and at the workstations in the MCR and at the RSW.

6. The emergency lighting can provide 10 foot candles at the safety panel and at the workstations in the MCR and at the RSW.

AP1000
9.5.3 Lighting Systems

- SRP acceptance criteria:
  - The lighting systems designs will be acceptable if they conform to the lighting levels recommended in NUREG-0700, which is based on the Illuminating Engineering Society of North America (IESNA) Lighting Handbook as related to industrial facilities.

U.S.NRC
United States Nuclear Regulatory Commission
Protecting People and the Environment

114

SRP Acceptance Criteria

1. Acceptance criteria of the design of the normal and emergency lighting systems, as described in the applicant's safety analysis report (SAR), is based in part on the degree of similarity of the systems design with those for previously reviewed plants with satisfactory operating experience.

2. The normal lighting system(s) is acceptable if the integrated design of the system(s) will provide adequate station lighting in all areas, from power sources described in Section 8.2 of the SRP that are required for control and maintenance of equipment and plant access routes during normal plant operations.

3. The emergency lighting system(s) is acceptable if the integrated design of the system(s) will provide adequate emergency station lighting in all areas, required for fire fighting, control and maintenance of equipment used for implementing safe shutdown of the plant during all plant operating conditions, and the access routes to and from these areas.

4. The lighting systems designs will be acceptable if they conform to the lighting levels recommended in NUREG-0700, which is based on the Illuminating Engineering Society of North America (IESNA) Lighting Handbook (Reference 2) as related to systems design and illumination levels recommended for industrial facilities.

AP1000 Fire Protection 9.5.2 and 9.5.3

- SER Evaluation Findings:
  - The staff concludes that the AP1000 communication systems will adequately provide effective communication.
  - The staff concludes that the lighting system for the AP1000 is in accordance with SRP Section 9.5.3 and with the lighting levels recommended in NUREG-0700. Therefore, the design is acceptable.

U.S.NRC
United States Nuclear Regulatory Commission
Protecting People and the Environment

115

Following the 72-hour period after a loss of all ac power sources, the lighting circuits in the MCR will be powered from two ancillary ac generators. In areas outside the MCR and the remote shutdown area, emergency lighting is provided by 8-hour, self-contained, battery-pack, sealed-beam lighting units.

AP1000
Standby Diesel Generator

- 9.5.4, Standby Diesel Generator Auxiliary Support Systems.
- 9.5.5, Standby Diesel Generator Cooling System.
- 9.5.6, Standby Diesel Generator Starting System.
- 9.5.7, Standby Diesel Generator Lubricating Oil System.
- 9.5.8, Standby Diesel Generator Combustion Air Intake and Exhaust System.
- 9.5.9, Diesel Generator and Auxiliary Boiler Fuel Oil System.

U.S.NRC
United States Nuclear Regulatory Commission
Protecting People and the Environment

116

SRP scope for a plant relying on emergency diesel generators.

AP1000 does not have safety-related EDGs.

AP1000
Standby Diesel Generator

- There are two redundant onsite standby Diesel Generator units in the AP1000 design.
- These will provide power, assuming a single active component failure, to selected non-safety-related ac loads in the event of a loss of normal and preferred ac power supplies.
- Each standby Diesel Generator unit is an independent system complete with its necessary support systems.

U.S.NRC
United States Nuclear Regulatory Commission
Protecting People and the Environment

117

There are two redundant onsite standby Diesel Generator units in the AP1000 design. These will provide power, assuming a single active component failure, to selected non-safety-related ac loads in the event of a loss of normal and preferred ac power supplies. Each standby Diesel Generator unit is an independent system complete with its necessary support systems that include the following:

- Standby Diesel Generator Cooling System.
- Standby Diesel Generator Starting System.
- Standby Diesel Generator Lubricating Oil System.
- Standby Diesel Generator Combustion Air Intake and Exhaust System.
- Diesel Generator and Auxiliary Boiler Fuel Oil System.

The standby Diesel Generators and their support systems have no safety-related functions and, therefore, have no nuclear safety design basis. They are classified as AP1000 Class D, non-seismic systems, which incorporate standard industrial quality assurance standards to provide appropriate integrity and function. The standby Diesel Generators and their support systems are also included in the AP1000 IPSAC and D-RAP programs.

AP1000
Standby Diesel Generator

- The standby Diesel Generators and their support systems have no safety-related functions and, therefore, have no nuclear safety design basis.
- They are classified as AP1000 Class D, non-seismic systems, which incorporate standard industrial quality assurance standards. The standby Diesel Generators and their support systems are also included in the AP1000 IPSAC and D-RAP programs.

U.S.NRC
United States Nuclear Regulatory Commission
Protecting People and the Environment

118

Description and safety class continued.

AP1000 Control Room Habitability and Auxiliary Systems

Module 5
SER Sections 6.4, 9.1-9.4

INSTRUCTOR: J. Stewart Bland

October 2008

U.S.NRC
United States Nuclear Regulatory Commission
Protecting People and the Environment

Learning Objectives

- Class participants are expected to understand:
  - **The NRC criteria and review approach for protection of workers in the control room during an accident described by this DCD.**
  - **How the AP1000 systems address the NRC criteria.**
  - **Significant NRC questions - RAIs.**
  - **Significant COL Items.**

U.S.NRC
United States Nuclear Regulatory Commission
Protecting People and the Environment

120

There are 5 subchapters to this module.

The discussion here is only going to address the subchapter dealing with control room habitability.

Other instructors will discuss the other four subchapters.

Of course, the reason for control room habitability is to ensure that it can be manned during all conditions. We don't want an accident to cause the operators to evacuate for their own safety.

Briefly, in order to ensure this, it has to be able to withstand normal and accident environmental conditions, it has to be protect the operators from airborne contaminants outside and it has to provide the operators shielding from radioactive materials outside.

SRP Acceptance Criteria (6.4)

Acceptance criteria are based upon NRC criteria specified in:

- **GDC criteria.**
- **TMI requirements.**
- **NRC Regulatory Guides.**
- **Industry consensus standards.**

U.S.NRC
United States Nuclear Regulatory Commission
Protecting People and the Environment

121

Control room habitability is ensured by conformance to the criteria on the slide, particularly the GDC criteria in the first bullet and the TMI related requirements in the second and third bullets, which I'll discuss more in the next slide

In addition, Reg. Guide 1.78 and certain industry consensus standards are required to be conformed to.

GDC Criteria

- GDC 4 – Environmental and dynamics effects design basis.
- GDC 5 – Sharing of SSCs.
- GDC 19 – Control room.

U.S.NRC
United States Nuclear Regulatory Commission
Protecting People and the Environment

122

These three GDC criteria ensure that:

(GDC 4) -
- the control room will not be physically damaged by normal operations or by accidents, including those resulting from natural events, for example, an explosion onsite, a seismic event, or a hurricane.
- requires ITS SSCs be designed to accommodate the effects of and being compatible with the environmental conditions for normal operation, maintenance, testing, and postulated accidents.

(GDC 5) -
- essentially states that that the control facility can perform its functions independent of other nearby nuclear units.
- requires shared ITS SSCs are capable of performing required safety functions independent of other nuclear units.

(GDC 19) -
- that the control room can be safely occupied during all anticipated conditions, including accidents or natural phenomena. Specifically, the control room must be able to filter out contaminants in outside air, be leak tight and provide shielding.
- requires a control room be designed so that actions can be taken to operate the nuclear power unit safely under normal conditions and to maintain it in a safe condition under accident conditions.

TMI Related Requirements

- 10 CFR 50.34(f)(2)(xxviii), “Additional TMI – Related Requirements”
- NUREG-0737, “Control Room Habitability”

U.S.NRC
United States Nuclear Regulatory Commission
Protecting People and the Environment

123

50.34 –

- regarding the evaluation of potential pathways for radioactivity and radiation that may lead to control room habitability problems.
- requires that if there are releases of radioactive material or chemicals somewhere around the control room, that the pathways to the control room are evaluated so that the potential risk of exposure from unmitigated releases are understood. This is actually related to GDC 19, but it requires that the specific pathways be identified. It is really a “level of detail” issue.

NUREG 0737 –

- regarding protection against the effects of release of toxic substances, either on or off the site.
- requires that control room operators will be protected against the releases determined by the first bullet. Again, this is also related to GDC 19, except it requires the applicant to demonstrate that protection is provided for each pathway.

Other NRC Criteria

- Reg. Guide 1.78, “Evaluating the Habitability of a Nuclear Power Plant Control Room During a Postulated Hazardous Chemical Release”
- NUREG-0570, “Toxic Vapor Concentrations in the Control Room Following a Postulated Accidental Release”

U.S.NRC
United States Nuclear Regulatory Commission
Protecting People and the Environment

124

This slide lists other NRC criteria.

RG 1.78, provides methods for evaluating the habitability of a control room during a postulated hazardous chemical release.

The NUREG addresses methods for determining possible toxic vapor concentrations in a control room following an accidental release.

Consensus Standards

- ASHRAE Standard 62, “Ventilation for Acceptable Indoor Air Quality”
- MIL-HDBK-759C, “Human Engineering Design Guidelines”
- MIL-STD-1472-E, “Human Engineering”
- ASTM E741, Standard Test Methods for Determining Air Change in a Single Zone by Means of a Tracer Gas Dilution”

U.S.NRC
United States Nuclear Regulatory Commission
Protecting People and the Environment

125

Consensus standards are just standards that are identified by the applicant in the DCD or called out by the NRC staff in its PSER. The slide lists some of the consensus standards that are applicable to the design of the control room habitability systems.

The standards listed mostly apply to the construction, testing, design and installation of the ventilation systems, and also human design guidelines.

Specifically, ASHRAE Standard 62, addresses ventilation systems for providing acceptable indoor air quality, the “MIL” handbook and standard address human engineering, and the ASTM standard addresses test methods for determining how rapidly air is changed in a particular zone.

Just as an aside, ASHRAE stands for “American Society of Heating, Refrigerating, and Air Conditioning Engineers, “MIL” stands for “Military” and is a US Department of Defense publication, and of course, “ASTM” is the American Society for Testing and Materials.

AP1000 DCD Content

- The DCD discusses the following items:
  - Main control room design.
  - Main control room pressure boundary.
  - Description of habitability system.
  - Leaktightness of pressure boundary.
  - Shielding design.
  - Modes of operation of the ventilation system.
  - In-service and preoperational testing.
  - Instrumentation requirements.

U.S.NRC
United States Nuclear Regulatory Commission
Protecting People and the Environment

126

As I mentioned in an earlier slide, the critical items associated with the MCR is the ability to function under normal and accident environmental conditions.

This is achieved by attention to the following:

- The ventilation system,
- The leaktightness of the facility,
- Its ability to provide shielding,
- Also, it is important that it provide to ability to test its systems to ensure its functionality so that it will be operational as designed if ever needed.

The DCD specifically addresses these areas.

As described previously

(GDC 4) -
- the control room will not be physically damaged by normal operations or by accidents, including those resulting from natural events, for example, an explosion onsite, a seismic event, or a hurricane.
- requires ITS SSCs be designed to accommodate the effects of and being compatible with the environmental conditions for normal operation, maintenance, testing, and postulated accidents.

GDC 4 is met because the control room habitability systems are protected against floods, internally generated missiles, and piping failures.

(GDC 5) -
- essentially states that that the control facility can perform its functions independent of other nearby nuclear units.
- requires shared ITS SSCs are capable of performing required safety functions independent of other nuclear units.

GDC 5 is met because the design described in the DCD does not share SSCs with other nuclear units.

(GDC 19) -
- that the control room can be safely occupied during all anticipated conditions, including accidents or natural phenomena. Specifically, the control room must be able to filter out contaminants in outside air, be leaktight and provide shielding.
- requires a control room be designed so that actions can be taken to operate the nuclear power unit safely under normal conditions and to maintain it in a safe condition under accident conditions.

GDC 19 is met because during normal and postulated accidents conditions, the habitability systems will provide the following:
- **A controlled environment for personnel comfort and equipment operability**
- **Radiation shielding against releases of airborne radioactive materials outside the control building**
- **Protection against releases of airborne radioactive materials and toxic gases surrounding the control building**
- **Protection against the effects of high-energy line ruptures in adjacent plant areas**
- **Fire protection to ensure that the control room is manned continuously.**

SER Evaluation Findings (6.4)

- The NRC staff determined the following:
  - The MCR is protected against floods.
  - Does not share SSCs with other nuclear power units.
  - MCR ventilation system is capable of mitigating the dose.
  - The NRC staff did not conclude that the requirements of 10 CFR 50.34(f)(2)(xxviii) and TMI Action Plan Item III.D.3.4 (NUREG-0737) were met but requested additional information (RAI).

U.S.NRC
United States Nuclear Regulatory Commission
Protecting People and the Environment

127

As indicated in the slides, the NRC staff concluded that the design complies with GDC 4, 5 and 19.

- The MCR is protected against floods, internally and externally generated missiles, and high- and moderate-energy pipe breaks, and as a result it meets the requirements of GDC 4.
- The design described in the DCD does not share SSCs with other nuclear power units, and as a result the ventilation systems meet the requirements of GDC 5.
- The MCR ventilation system, under high radiation conditions is capable of mitigation the dose in the MCR following DBAs to meet dose criteria specified in GDC 19; therefore the design complies with GDC 19.

The NRC staff approved the MCR design on the basis that during normal and postulated accidents conditions, the habitability systems will provide:

- A controlled environment for personnel comfort and equipment operability.
- Radiation shielding against releases of airborne radioactive materials.
- Protection against releases of airborne radioactive materials and toxic gases outside the MCR.
- Protection against the effects of high-energy line ruptures in adjacent plant areas.
- Protection against fires.

In summary, the design is protected against floods, missiles and energetic pipe breaks, the control rooms SSCs are independent of other units onsite, and the control room design and ventilation system will mitigate doses to acceptable levels.

The NRC staff did not conclude that the TMI requirements were met but determined that the requirements needed to be addressed as part of the RAI and COL processes which I'll discuss in the next two slides.

SER Findings re: Safety-related Systems, Seismic II/I Protection and Support Systems -- Control Room Habitability --

- Several of the systems associated with control room habitability are safety-related, including:
  - Main control room emergency habitability system (VES)
  - Electrical class 1E VES components
  - Compressed air storage tanks
- No seismic II/I protection is required for these systems
- Ventilation systems maintain the Class 1E electrical, penetration and battery rooms within acceptable temperature, and are support systems to those safety-related systems.

U.S.NRC
United States Nuclear Regulatory Commission
Protecting People and the Environment

128

- The design stipulates that that the main control room emergency habitability system is a safety-related system. In particular, the supply isolation valve and the piping and penetrations are safety-related. Also, the VES has two safety-related, full capacity trains. Single-active-failure protection is provided. These components are safety class C, seismic category I.
- These systems can fail in a seismic event and their failure will not cause the failure, due to seismic interaction, of other safety related systems. As a result, seismic II/I protection is not required for them.
- The electrical systems supporting the VES are designated 1E. Also, other support systems include the ventilation systems that maintain the Class 1E electrical, penetration and battery rooms within acceptable temperature.

Significant RAIs

NRC staff requested additional information as part of the RAI 410.007 to verify:

- (i) the amount and locations of possible toxic chemicals,
- (ii) seismic Category I toxic gas monitoring,
- (iii) assess control room protection for toxic chemicals, and
- (iv) evaluate offsite toxic releases.

The purpose of this is to verify compliance with 10 CFR 50.34(f)(2)(xxviii) and TMI Action Plan Item III.D.3.4

U.S.NRC
United States Nuclear Regulatory Commission
Protecting People and the Environment

129

The RAI process is one where the NRC staff can request additional information.

The NRC staff requested additional information described in the slide as part of the RAI 410.007 to verify compliance with 10 CFR 50.34(f)(2)(xxviii) and TMI Action Plan Item III.D.3.4 (NUREG-0737).

In addition, as part of the RAI process, the staff requested that several references in the DCD be modified that are not mentioned in the slide.

COL Items

- The possible harmful effects to control room personnel from toxic chemicals located at or near the site will be addressed (6.4-3).
- Procedures and training for control room habitability are consistent with the intent of Generic Safety Issue 83 (6.4-1).

U.S.NRC
United States Nuclear Regulatory Commission
Protecting People and the Environment

130

COL action items are items that the applicant must address that are specific to the facility. The slide shows the COL Items for the control room habitability systems.

The first bullet somewhat overlaps the information requested under RAI 410.007.

The second bullet ensures that control room operators understand the procedures that ensure control room habitability.

Fuel Storage and Handling

SER Section 9.1

U.S.NRC
United States Nuclear Regulatory Commission
Protecting People and the Environment

Scope of the Fuel Storage and Handling Systems

- New fuel storage.
- Spent fuel storage.
- Spent fuel pool cooling system.
- Light-load handling system.
- Overhead heavy load handling systems.

U.S.NRC
United States Nuclear Regulatory Commission
Protecting People and the Environment

132

This subchapter actually consists of the 5 sub-subchapters listed in the slide.

Of course, new fuel does not contain fission products and it does not have the contamination issues or heat generating capability associated with spent fuel so the safety issues are less for new fuel.

For both new and spent fuel the paramount concern is criticality control, so anything that affect that is important, like dropping something that could change the geometry, that’s why the handling system are important from the standpoint of safety.

Similarly, spent fuel can generate a lot of heat so the cooling system is important.

SRP Acceptance Criteria

Acceptance criteria are based upon NRC criteria specified in 10 CFR 50, Appendix A, General Design Criteria for Nuclear Power Plants.

U.S.NRC
United States Nuclear Regulatory Commission
Protecting People and the Environment

133

Because this presentation involves 5 sub-subchapters, or 5 different systems, except for Criterion 2, 5, and 61, all the acceptance criteria in the above slide don't apply to a given single system.

- GDC criteria outlined in 10 CFR 50, specifically, GDC 2, 4, 5, 44, 45, 46, 61, 62, 63.

The next two slides summarize the GDC criteria.

GDC Criteria

- GDC 2 – Design bases for protection against natural phenomena
- GDC 4 – Environmental and dynamic effects design bases
- GDC 5 – Sharing of SSCs
- GDC 44 – Cooling water
- GDC 45 – Inspection of cooling water systems
- GDC 46 – Testing of cooling water systems
- GDC 61 – Fuel storage and handling and radioactivity control
- GDC 62 – Prevention of criticality in fuel storage and handling
- GDC 63 – monitoring fuel and waste storage

U.S.NRC
United States Nuclear Regulatory Commission
Protecting People and the Environment

134

This slide and the next slide summarize the GDC criteria as they apply to the fuel storage and handling systems.

GDC 2 -
- systems must withstand the effects of natural phenomena.
- is to ensure that the system and the structures housing it can withstand the effects of natural phenomena.

GDC 4 –
- ITS SSCs withstand the effects of environmental conditions for normal operation, maintenance, testing, and postulated accidents.
- requires ITS SSCs be designed to accommodate the effects of and being compatible with the environmental conditions for normal operation, maintenance, testing, and postulated accidents.

GDC 5 –
- requires shared ITS SSCs are capable of performing required safety functions independent of other nuclear units.
- requires shared ITS SSCs are capable of performing required safety functions independent of other nuclear units.

GDC 44 –
- (1) the system must be able to transfer heat loads from safety-related SSCs to a heat sink under both normal and accident conditions; (2) have suitable redundancy so that safety functions can be performed assuming a single active failure of a component coincident with a loss of offsite power; and (3) the system must be able to isolate components, systems, or piping so that they do not compromise the system's safety function.
- is to ensure
  (1) the system's ability to transfer heat loads from safety-related SSCs to a heat sink under both normal and accident conditions;
  (2) suitable redundancy of components so that safety functions can be performed assuming a single active failure of a component coincident with a loss of offsite power, for example, if a load handling system is moving a fuel bundle over the pool, and a loss of offsite power occurs, while at the same time the crane motor fails, there would have to be some other system that would prevent the fuel bundle from falling into the pool.
  (3) the system's ability to isolate components, systems, or piping so that they do not compromise the system's safety function.

GDC 45 –
- is to ensure that the system is designed to allow periodic inspection of safety-related components and equipment.
- the system must allow periodic inspection of safety-related components and equipment.

GDC 46 -
- is to provide for operational functional testing of safety-related systems or components to ensure structural integrity and system leaktightness, operability, and adequate performance of active system components, as well as the capability of the integrated system to perform the required functions during normal, shutdown, and accident conditions.
- The system must allow operational functional testing.

GDC 61 -
- is to provide (1) a capability for periodic testing of components important to safety; (2) for provisions for containment; (3) for provisions for decay heat removal; (4) a capability to prevent reduction in fuel storage coolant inventory under accident conditions; and (5) a capability and capacity to remove corrosion products, radioactive materials, and impurities from the pool water and reduce occupational exposures.
- the system must provide for functional testing of components to ensure structural integrity and system leaktightness, operability, and performance of active system components under all conditions.

GDC 62 -
- is to ensure that criticality is prevented.
- the system must be designed to prevent criticality.

GDC 63 -
- is to ensure that a monitoring system exists to detect conditions that could result in the loss of decay heat removal capabilities, to detect excessive radiation levels, and to initiate appropriate safety actions.
- the system must have monitoring system to detect conditions that could result in loss of decay heat removal capabilities, excessive radiation and initiate safety actions.

Other NRC Criteria

- Reg. Guide 1.29, “Seismic Design Classification”
- Reg. Guide 1.13, “Spent Fuel Storage Facility Design Basis”
- NUREG-0612, “Control of Heavy Loads at Nuclear Power Plants”

U.S.NRC
United States Nuclear Regulatory Commission
Protecting People and the Environment

135

The slide lists other NRC criteria.

Reg. Guide 1.29 specifies seismic Category I requirements which the new fuel storage rack and spent fuel pool are designed to

Reg. Guide 1.13 provides guidance for the sizes of loads that can be moved over stored fuel.

NUREG-0612 provides criteria for a number of design features that must be built into cranes, for example:

- consequences resulting from load drops (essentially, if something is dropped on stored fuel it cannot cause a criticality).
- it references several consensus standards for meeting single failure proof requirements.
- Heavy load lift points.

Consensus Standards

- ANS 57.1, “Design Requirements for Light Water Reactor Fuel Handling Systems”
- ANSI/ASME B30.2-1990, “Overhead and Gantry Cranes”
- ANSI N16.1-75, “Nuclear Criticality Safety in Operations with Fissionable Materials Outside Reactors”
- ANSI N16.9-75, “Validation of Calculation al Methods for Nuclear Criticality Safety”

U.S.NRC
United States Nuclear Regulatory Commission
Protecting People and the Environment

136

The slide just lists four of the ten consensus standards listed in the DCD that are applicable to the design of the fuel handling and storage systems. The four standards that are listed are just to give you an idea of the type of other standards that play a role in the design:

- ANS 57.1 provides design standards for LWR fuel handling systems.
- ASME Code Section II, Div. 1, provides criteria for stress analysis and material procurement.
- ANSI N16.1-75, provides methods for performing criticality analyses.
- ANSI N16.9-75, provides methods for validating criticality analyses.

AP1000 DCD Content

For all the items, the DCD discusses the design basis and the safety evaluation, and in addition:

- New fuel storage.
- Spent fuel storage.
- Spent fuel pool cooling system.
- Light Load Handling System.
- Overhead Heavy Load Handling systems.

U.S.NRC
United States Nuclear Regulatory Commission
Protecting People and the Environment

137

- New fuel storage
  - Facilities description
  - Fuel rack design
- Spent fuel storage
  - Facilities description
  - Fuel rack design
- Spent fuel pool cooling system
  - Pool cooling (partial and full core off-load)
  - Pool, in-containment refueling water storage tank and refueling cavity purification
  - Water transfers
  - Pool tritium control
  - System description including: pumps, heat exchangers, demineralizers, filters, valves, piping requirements, reactor cavity seal ring and reactor cavity connections
  - System operations including normal, refueling and abnormal conditions
  - Inspection and testing requirements
  - Instrumentation requirements
- Light Load Handling System
  - System description
    - Fuel handling
    - Refueling procedure
    - Reactor disassembly and reassembly
    - Fuel handling
    - Spent fuel cask loading
  - Component descriptions
  - Seismic considerations
  - Containment pressure boundary integrity
  - Radiation shielding
  - Inspection and testing requirements
- Overhead Heavy Load Handling systems
  - System & component description
    - Main hoist systems
    - Auxiliary Hoist System
    - Special lifting devices
    - Load lift points
  - Instrumentation applications
  - In-service inspection testing

GDC requirements are met because:

- GDC 2 (natural phenomena): The fuel storage and handling systems design complies with GDC 2 regarding the ability to withstand natural phenomena because it complies with applicable portions of RG 1.13, 1.29 and 1.117.
- GDC 4 (environmental conditions): The design complies with GDC 4, regarding its ability to withstand the effects of external missiles, pipe whip, jet impingement forces and adverse environmental conditions associated with pipe breaks. Internally generated missiles are of no concern because there are not credible sources of these in the fuel handling area because it complies with applicable sections of RG 1.13, 1.115, 1.117 and ANS 57.2.
- GDC 5 (independence from other units): In that the AP1000 is a single-unit design, and a COL applicant must comply with GDC 5 for a multiple-unit site, the staff found that the design has satisfied the requirements of GDC 5 related to whether shared SSCs important to safety are capable of performing required safety functions.
- GDC 44 (transfer heat loads, redundancy and ability to isolate): During accident conditions, the SFP is designed to cool by boiling and transferring the heat to the atmosphere and therefore meets the intent of GDC 44.
- GDC 45 (inspectable): While the SFP is not safety-related, periodic visual inspection and preventive maintenance will be performed, thus meeting the intent of GDC 45.
- GDC 46 (provide for operational functional testing): The SFP cooling system meets the required functions of providing containment isolation and emergency makeup, therefore, it meets the intent of GDC 46.
- GDC 61 (testing for structural integrity, leaktightness, operability, and performance of active system components)& 62 (design to prevent criticality): The neutron multiplication factor (Keff) remains less than or equal to 0.95 under all conditions. This is consistent with recommendations in ANS 57.1 and ANS 57.3. On this basis, the NRC staff found that the new fuel and spent fuel storage facility met the requirements of GC 61 and 62.
- GDC 63 (monitoring to detect loss of decay heat removal capabilities and excessive radiation): The staff found that the spent fuel storage design complies with the requirements of GDC 63 as they relates to monitoring systems provided to detect conditions that could result in the loss of decay heat removal capabilities, to detect excessive radiation levels, and to initiate appropriate safety actions.

SER Evaluation Findings

- Some of the bases for approval include the following:
  - Rack design k_{eff} remains less than 0.95.
  - Racks designed to absorb dropped fuel assembly.
  - Fuel assemblies submerged for at least 7 days.
  - Several sources of water.
  - Fuel handling devices designed to avoid dropping assemblies.
  - Lifting devices ensure water shielding is maintained.
  - Criticality is prevented during fuel movement.
  - Heavy loads not over safety related components.
  - Single failure criterion applies to the heavy load handling system.
- Met all GDC criteria.

U.S.NRC
United States Nuclear Regulatory Commission
Protecting People and the Environment

138

New fuel:
- The rack is a seismic Category I structure.
- Rack design Keff remains less than 0.95.
- The purchase specification for the new fuel storage racks will require a vendor criticality analysis.
- The new fuel rack is located in the new fuel storage pit which is covered and no loads can be carried over the pit.
- The racks are designed with adequate energy absorption capabilities.
- Materials used in rack construction are compatible with the storage pit environment.
- The rack structure is designed to maintain a safe geometric array.

Spent fuel:
- The design of the spent fuel racks can withstand normal and postulated dead loads, live loads, loads resulting from thermal effects and loads caused by the SSE.
- The design of the racks is such that Keff remains less than or equal to 0.95 under all conditions.
- The racks are designed with adequate energy absorption capabilities to withstand the impact of a dropped fuel assembly.
- The racks can withstand an uplift force of 5000 pounds.
- Materials used in rack construction are compatible with the storage pool environment.

SFP cooling:
- The SFP is designed such that a water level is maintained above the spent fuel assemblies for at least 7 days following a loss of the spent fuel pool cooling system, using only onsite makeup water.
- The maximum heat load is assumed to be the heat load for a full core off load immediately following a refueling in which 44 percent of the fuel assemblies were replaced.
- Safety-related makeup water can be supplied to the fuel pool from the fuel transfer canal, cask washdown pit, and passive containment cooling water storage tank.
- The spent fuel pool cooling system includes safety-related connections from the passive containment cooling system water storage tank in the passive containment cooling system to establish makeup following a design basis event including a seismic event.
- Makeup water is also obtained from the passive containment cooling system ancillary water storage tank.

Fuel handling:
- Fuel handling devices have provisions to avoid dropping or jamming of fuel assemblies during transfer operation.
- Handling equipment has provisions to avoid dropping of fuel handling devices during the fuel transfer operation.
- Handling equipment used to raise and lower spent fuel has a limited maximum lift height so that the minimum required depth of water shielding is maintained.
- The fuel transfer system, where it penetrates the containment, has provisions to preserve the integrity of the containment pressure boundary.
- Criticality during fuel handling operations is prevented by the geometrically safe configuration of the fuel handling equipment.
- In the event of a safe shutdown earthquake, handling equipment cannot fail in such a manner as to prevent required function of seismic Category I equipment.
- The inertial loads imparted to the fuel assemblies or core components during handling operations are less than potential damage causing loads.
- Physical safety features are provided for personnel who operate handling equipment.

Heavy Load Handling systems:
- The design of heavy load handling systems are based on the following criteria:
  - Heavy loads are not carried over or near safety-related components to the extent practicable, including irradiated fuel and safe shutdown components. Safe load paths are handling in safety-related areas.
  - The likelihood of a load drop is extremely small, or the consequences are within limits.
  - Single-failure-proof systems can stop and hold a critical load following the credible failure of a single component.
  - Single-failure-proof systems can support a critical load during and after a safe shutdown earthquake.

GDC requirements:
- GDC 2 (natural phenomena): The fuel storage and handling systems design complies with GDC 2 regarding the ability to withstand natural phenomena because it complies with applicable portions of RG 1.13, 1.29 and 1.117.
- GDC 4 (environmental conditions): The design complies with GDC 4, regarding its ability to withstand the effects of external missiles, pipe whip, jet impingement forces and adverse environmental conditions associated with pipe breaks. Internally generated missiles are of no concern because there are not credible sources of these in the fuel handling area because it complies with applicable sections of RG 1.13, 1.115, 1.117 and ANS 57.2.
- GDC 5 (independence from other units): In that the AP1000 is a single-unit design, and a COL applicant must comply with GDC 5 for a multiple-unit site, the staff found that the design has satisfied the requirements of GDC 5 related to whether shared SSCs important to safety are capable of performing required safety functions.
- GDC 44 (transfer heat loads, redundancy and ability to isolate): During accident conditions, the SFP is designed to cool by boiling and transferring the heat to the atmosphere and therefore meets the intent of GDC 44.
- GDC 45 (inspectable): While the SFP is not safety-related, periodic visual inspection and preventive maintenance will be performed, thus meeting the intent of GDC 45.
- GDC 46 (provide for operational functional testing): The SFP cooling system meets the required functions of providing containment isolation and emergency makeup, therefore, it meets the intent of GDC 46.
- GDC 61 (testing for structural integrity, leaktightness, operability, and performance of active system components)& 62 (design to prevent criticality): The neutron multiplication factor (Keff) remains less than or equal to 0.95 under all conditions. This is consistent with recommendations in ANS 57.1 and ANS 57.3. On this basis, the NRC staff found that the new fuel and spent fuel storage facility met the requirements of GC 61 and 62.
- GDC 63 (monitoring to detect loss of decay heat removal capabilities and excessive radiation): The staff found that the spent fuel storage design complies with the requirements of GDC 63 as they relates to monitoring systems provided to detect conditions that could result in the loss of decay heat removal capabilities, to detect excessive radiation levels, and to initiate appropriate safety actions.

SER Findings re: Safety-related Systems, Seismic II/I Protection and Support Systems -- Fuel Storage and Handling Systems --

- The new fuel storage facility and the spent fuel storage facility are safety-related, including:
  - Seismic design of the racks and facility
  - Robust enough to withstand the drop of a fuel element or tools
  - Designed to avoid criticality
  - Spent fuel pool high or low water level instrumentation
  - Fuel handling machine
  - Containment polar crane
  - Equipment hatch hoist
- The spent fuel pool cooling system is non-safety-related except for containment isolation and the emergency makeup connections.

U.S.NRC
United States Nuclear Regulatory Commission
Protecting People and the Environment

139

- The new fuel storage facility and spent fuel storage facility have safety-related components including seismic design of the racks and the facility, the ability of the racks to withstand a drop onto them of a fuel bundle or of tools used in the area, and the design to control criticality. The fuel handling machine is safety class C, seismic category I. The new fuel storage rack is safety class D, seismic category I, the spent fuel storage rack is safety class D, seismic category I. the spent fuel pool is safety class C, seismic category I. The Containment polar crane is safety class C, seismic category I. The equipment hatch hoist is safety class C, seismic category I. The maintenance hatch hoist is safety class D, seismic category I. The spent fuel pool cooling system safety-related items are safety class B or C, seismic category I.

- Several systems are not safety-related such as the spent fuel pool cooling system, except for containment isolation and emergency makeup connections.

SER Findings re: Safety-related Systems, Seismic II/I Protection and Support Systems -- Fuel Storage and Handling Systems -- (cont.)

- Seismic II/I protection is required for certain systems including:
  - Fuel-handling machine in the spent fuel facility (SC-I)
  - New fuel jib crane (SC-II)
  - Containment polar crane (SC-I)
  - Equipment hatch system (SC-I)
  - Maintenance hatch hoist system (SC-I)
- None of these systems are support systems for other safety-related systems.

U.S.NRC
United States Nuclear Regulatory Commission
Protecting People and the Environment

140

- Seismic II/I protection is required for certain systems, including the fuel handling machine in the spent fuel facility, the new fuel jib crane, the containment polar crane, the equipment hatch system, and the maintenance hatch hoist system. The latter three are critical load systems, such that if dropped, could cause unacceptable damage to reactor fuel elements, or a loss of safe shutdown or decay heat removal capability.
- These systems can fail and they will not cause the failure of any other safety-related systems, therefore, they do not meet the definition of support system to other safety-related systems.

COL Items

The COL applicant is responsible for the following actions:

- Fuel racks/criticality analysis.
- Spent fuel racks/criticality analysis.
- Inspection of the light load handling system.
- Inspection of the overhead heavy load handling.

U.S.NRC
United States Nuclear Regulatory Commission
Protecting People and the Environment

141

- A confirmatory structural dynamic and stress analysis for the new fuel racks as described in DCD Section 9.1.1.2.1.
- A confirmatory criticality analysis for the new fuel rack, as described in DCD Section 9.1.1.3.
- A confirmatory structural dynamic and stress analysis for the spent fuel racks, as described in DCD Subsection 9.1.2.2.1.
- A confirmatory criticality analysis for the spent fuel racks, as described in DCD Subsection 9.1.2.3.
- A program for in-service inspection of the light load handling system as specified in DCD Subsection 9.1.4.4.
- A program for in-service inspection of the overhead heavy load handling system as specified in DCD Subsection 9.1.5.4.

Water Systems
SER Section 9.2

U.S.NRC
United States Nuclear Regulatory Commission
Protecting People and the Environment

Scope of the Water Systems

- Service Water System.
- Component Cooling Water System.
- Demineralized Water Treatment System.
- Demineralized Water Transfer and Storage System.
- Potable Water System.

U.S.NRC
United States Nuclear Regulatory Commission
Protecting People and the Environment

143

This subchapter actually consists of the 10 sub-subchapters listed in these two slides.

Let's take a minute to briefly touch on the safety issues with each of these systems:

- The service water system supplies cooling water to remove heat from the non-safety-related component cooling water system heat exchangers in the turbine building.

- The component cooling system is a non-safety-related, closed-loop cooling system that transfers heat from various non-safety-related plant components to the service water system during normal plant operation. It also removes heat from various safety-related components. However none of these requires cooling water to perform its safety related functions.

- The demineralized water treatment system received water from the raw water system, processes this water to remove ionic impurities, and provides demineralized water to the demineralized water treatment system.

- The demineralized water transfer and storage system is a non safety related system that supplies demineralized water to fill the condensate storage tank and to the plant systems that demand a demineralized water supply.

- The potable water system is a non safety related system that is designed to provide clean water from the raw water system for domestic use and human consumption.

Scope of the Water Systems (cont.)

- Sanitary Drainage System.
- Central Chilled Water System.
- Turbine Building Closed Cooling System.
- Waste Water System.
- Hot Water Heating System.

U.S.NRC
United States Nuclear Regulatory Commission
Protecting People and the Environment

144

- The sanitary drainage system is a non safety related system that collects sanitary wastes from plant restrooms and locker room facilities in the various buildings for treatment, dilution and discharge.

- The central chilled water system is a non safety related system that provides chilled water to the cooling coils of the supply air handling units and unit coolers of various plant systems.

- The turbine building closed cooling system provides removal of heat from heat exchangers in the turbine building.

- The waste water system is a non safety related system that collects and processes the waste water from the equipment and floor drains in non-radioactive building areas.

- The hot water heating system supplies heated water to non safety related systems.

SRP Acceptance Criteria

Acceptance criteria are based upon NRC criteria specified in 10 CFR 50, Appendix A, General Design Criteria for Nuclear Power Plants

U.S.NRC
United States Nuclear Regulatory Commission
Protecting People and the Environment

145

Because this presentation involves 10 sub-subchapters, or 10 different systems, all the acceptance criteria in the above slide don't apply to a given single system.

The next two slides summarize the GDC criteria.

GDC Criteria

- GDC 2 – Design bases for protection against natural phenomena.
- GDC 4 – Environmental and dynamic effects design bases.
- GDC 5 – Sharing of SSCs.
- GDC 60 – Control of releases of radioactive materials to the environment.

U.S.NRC
United States Nuclear Regulatory Commission
Protecting People and the Environment

146

This slide and the next summarize the GDC criteria as they apply to the auxiliary systems.

GDC 2, requires that safety-related SSCs are capable of withstanding the effects of earthquakes or other natural phenomena. This GDC applies to all the systems except for the plant gas system and the secondary sampling system.

GDC 4, requires that the system is capable of withstanding the effects of flooding and the environmental conditions associated with normal operation, maintenance, testing, and postulated accidents. This GDC only applies to the equipment floor and drain system.

GDC 5, requires that safety-related SSCs are not shared with other units. This GDC applies to the compressed and instrument air system and to the chemical and volume control system.

GDC 60, requires that there is a means to suitably control the release of radioactive materials in liquid effluent, including during anticipated operational occurrences. This GDC applies to the equipment floor and drain system and the chemical and volume control system.

AP1000 DCD Content

The DCD discusses the water systems:

- Design basis.
- System description.
- Safety evaluation.
- Tests and inspections.
- Instrument applications.

U.S.NRC
United States Nuclear Regulatory Commission
Protecting People and the Environment

147

The system meets the GDC requirements for the following reasons:

GDC 2 – Design bases for protection against natural phenomena
GDC 2 is met because those systems that are required to provide seismic protection described in Regulatory Position C.1 or C.2 of reg guide 1.29, do so.

GDC 4 – Environmental and dynamic effects design bases
GDC 4 is met because the control room habitability systems are protected against floods, internally generated missiles, and piping failures.

GDC 5 – Sharing of SSCs
GDC 5 is met because the design described in the DCD does not share SSCs with other nuclear units.

GDC 60 – Control of releases of radioactive materials to the environment
GDC 60 is met because the three systems that could potentially release water to the environment, the potable water system, the sanitary drainage system, and waste water system, conform with the acceptance criteria of the SRP for controlling the releases of radioactive material to the environment.

SER Evaluation Findings

The NRC staff concluded the design of these systems is acceptable for the following reasons:

- All system designs conform to the applicable GDCs.
- All system designs have are not support systems, an in addition, the following systems have no safety-related function and but some have seismic interaction with safety-related systems and provide seismic II/I protection:
  - Service water system
  - Demineralized water treatment system
  - Potable water system
  - Sanitary drainage system
  - Turbine building closed cooling system
  - Waste water system
  - Hot water heating system

U.S.NRC
United States Nuclear Regulatory Commission
Protecting People and the Environment

148

- The staff concluded the system designs meet the applicable provisions described in the SRP sections.

- Seismic II/I protection is conformance with Regulatory Position C2 of Reg guide 1.29 requires that the system not necessarily be operable after a design basis seismic event, but that it not damage nearby safety-related equipment.

SER Evaluation Findings (cont.)

- Three of the systems are safety related to the extent that they provide containment isolation and seismic II/I protection. These systems are:
  - Component cooling water
  - Demineralized water transfer & storage system
  - Central chilled water system

  These systems conform to Regulatory Position C1 of RG 1.29.

U.S.NRC
United States Nuclear Regulatory Commission
Protecting People and the Environment

149

- The design is such that, except for containment isolation for three systems, these systems are not safety related. They are not necessary to prevent an accident or mitigate the consequences of an accident. The component cooling water isolation is safety class B, seismic category I. The demineralized water system isolation is safety class B, seismic category I. The central chilled water system is safety class B, seismic category I.

SER Evaluation Findings (cont.)

- Note that the Component Cooling Water System is a **non-safety related system** that transfers heat from various safety related plant components to the SWS. It is not safety-related because none of the safety-related components requires cooling water from CCS to perform its safety-related functions.
- Note that the Service Water System is **non-safety related**. In traditional PWRs, portions of the SWS were required to perform safety-related functions. The AP1000 SWS is a non-safety-related system because the SWS removes heat only from the component cooling water system which is not safety related.

U.S.NRC
United States Nuclear Regulatory Commission
Protecting People and the Environment

150

- The component cooling water system is a non-safety related, closed-loop system that transfers heat from various safety related plant components to the SWS, but none of the safety-related components requires cooling water from the CCS to perform its safety-related functions. The component cooling water system is not safety related because it is not necessary to prevent or mitigate an accident. The passive core cooling system and the passive containment cooling system provide safety-related cooldown and decay heat removal functions. In traditional designs, the CCS would be a reactor auxiliary cooling water system that would be required to operate to mitigate an accident; therefore, it would be safety-related.

- The AP1000 differs from that of the traditional PWR designs in that the AP1000 SWS is a completely non-safety-related system with no safety-related function. In traditional PWRs, portions of the SWS were required to perform safety-related functions. The AP1000 SWS is a non-safety-related system because the SWS removes heat only from the component cooling water system which is not safety related.

Significant RAIs

NRC staff requested additional information as part of the RAI 281.002 asking the applicant to provide maximum concentrations of halogens and sulfates in the system. The applicant responded by providing this information with the maximum value of 1 ppb for chloride and sulfate.

U.S.NRC
United States Nuclear Regulatory Commission
Protecting People and the Environment

151

The RAI process is one where the NRC staff can request additional information.

The NRC staff requested additional information described in the slide and received and closed the issue.

Process Auxiliaries
SER Section 9.3

U.S.NRC
United States Nuclear Regulatory Commission
Protecting People and the Environment

Scope of the Process Auxiliary Systems

- Compressed and Instrument Air System.
- Plant Gas System.
- Primary Sampling System.
- Secondary Sampling System.
- Equipment Floor and Drain System.
- Chemical and Volume Control System.

U.S.NRC
United States Nuclear Regulatory Commission
Protecting People and the Environment

153

This subchapter actually consists of the 6 sub-subchapters listed in the slide.

Let's take a minute to briefly touch on the safety issues with each of these systems:

- The compressed air an instrument air system has no safety-related function other than containment isolation, but can introduce industrial hazards.

- The plant gas system has no safety-related function, but does introduce industrial hazards.

- The primary sampling system has no safety-related function other than containment isolation, but can introduce contamination hazards to workers.

- The secondary sampling system has no safety-related function, and has only a small potential to introduce contamination hazards to workers.

- The equipment floor and drain system serve no safety-related function except for the back flow preventers in drain lines from the containment cavities to the containment sump. The floor drainage systems and equipment are designed to prevent damage to safety-related SSCs.

- The chemical and volume control system's safety functions are limited to:
  - Containment isolation of system lines penetrating containment.
  - Termination of inadvertent RCS (reactor coolant system) boron dilution.
  - Isolation of makeup on a steam generator or pressurizer high level signal.
  - Preservation of the RCS pressure boundary.

SRP Acceptance Criteria

Acceptance criteria are based upon NRC criteria specified in 10 CFR 50, Appendix A, General Design Criteria for Nuclear Power Plants.

Specifically: GDC 1, 2, 4, 5, 13, 14, 26, 29, 33, 35, 41, 60, 61.

U.S.NRC
United States Nuclear Regulatory Commission
Protecting People and the Environment

154

Because this presentation involves 5 sub-subchapters, or 5 different systems, all the acceptance criteria in the above slide don't apply to a given single system.

The next two slides summarize the GDC criteria.

GDC Criteria

- GDC 1 - Quality standards and records.
- GDC 2 – Design bases for protection against natural phenomena.
- GDC 4 – Environmental and dynamic effects design bases.
- GDC 5 – Sharing of SSCs.
- GDC 13 – Instrumentation and control.
- GDC 14 – Reactor coolant pressure boundary.
- GDC 29- Protection against anticipated operational occurrences.
- GDC 60 – Control of releases of radioactive materials to the environment.
- GDC 61 – Fuel storage and handling and radioactivity control.

U.S.NRC
United States Nuclear Regulatory Commission
Protecting People and the Environment

155

This slide and the next summarize the GDC criteria as they apply to the auxiliary systems.

GDC 1, requires that safety-related SSCs are designed, fabricated, and tested to quality standards commensurate with the importance of the safety functions to be performed.

GDC 2, requires that safety-related SSCs are capable of withstanding the effects of earthquakes or other natural phenomena.

GDC 4, requires that the system is capable of withstanding the effects of flooding and the environmental conditions associated with normal operation, maintenance, testing, and postulated accidents.

GDC 5, requires that safety-related SSCs are not shared with other units.

GDC 13, requires monitoring of variables that can affect the fission process, the integrity of the reactor core, and the reactor coolant pressure boundary. Ensures that variables related to the fission process, the integrity of the reactor core, and the reactor coolant pressure boundary, are monitored.

GDC 14, requires that the integrity of the reactor coolant pressure boundary is maintained by sampling for chemical species that can affect the reactor coolant pressure boundary. Assures the integrity of the reactor coolant pressure boundary by sampling for chemical species that can affect it.

GDC 29, ensures negative reactivity to the reactor can be provided by supplying borated water to the RCS requires that borated water can be supplied to the RCS to provide negative reactivity to the reactor the event of anticipated operational occurrences.

GDC 60, requires that there is a means to suitably control the release of radioactive materials in liquid effluent, including during anticipated operational occurrences as it relates to providing a means to suitably control the release of radioactive materials in liquid effluent.

GDC 61, requires that the chemical and volume control system (CVS) components having provisions for venting and draining through closed systems as it relates to CVS components having provisions for venting and draining through closed systems.

Other NRC Criteria

- Reg. Guide 1.29, “Seismic Design Classification”
- Reg. Guide 1.91, “Evaluation of Explosions Postulated to Occur on Transportation Routes near Nuclear Power Plants”
- Reg. Guide 1.97, “Criteria for Accident Monitoring instrumentation for Nuclear Power Plants”
- Reg. Guide 1.26, Quality Group Classifications and Standards for Water-, Steam-, and Radioactive Waste-containing Components of Nuclear Power Plants”

U.S.NRC
United States Nuclear Regulatory Commission
Protecting People and the Environment

156

The slide lists other NRC criteria.

Reg. Guide 1.29 specifies seismic category design requirements. The air systems only need to comply with Position C.2, Seismic II, because they do not have to survive a SSE, but only not damage other SSCs, this is commonly called seismic II over I protection. Aspects of the floor drains system are Seismic I.

Reg. Guide 1.91 provides guidance on methods to comply with GDC 4, with respect to the dynamic effects of explosions of hazardous material that may be carried on nearby transportation routes.

Reg. Guide 1.97, provides guidance for instrumentation to assess plant and environmental conditions during and following an accident. The applicant stated in the DCD that the design is consistent with this guidance.

Reg. Guides 1.26 and 1.29 address seismic classification of the system to which sampling lines and components are connected. The classification of the AP1000 sampling lines is consistent with these reg. guides.

Consensus Standards

- ANSI/ISA S-7.3, “Quality Standard for Instrument Air”
- ASME Code Section VIII, Div. I, “Pressure Vessels”
- ANSI/ANS-51.1, “Nuclear Safety Criteria for the Design of Stationary Pressurized Water Reactor Plants”
- ANSI/CGA G-7.1, “Commodity Specification for Air”

U.S.NRC
United States Nuclear Regulatory Commission
Protecting People and the Environment

157

The slide the consensus standards listed in the DCD that are applicable to the design of the auxiliary systems.

- ANSI/ISA S-7.3, is a standard of the Instrument Society of American Standards and provides quality standards for instrument air. It is applicable to the instrument air system and provides standards for instrument air quality.
- ASME Code is a standard of the American Society of Mechanical Engineers. There are two cited subsections in the DCD, a subsection that addresses pressure vessels and a subsection that address hydrostatic tests for pressure vessels. These standards are applicable to the storage vessels associated with the Plant Gas System.
- ANSI/ANS-51.1 is an American Nuclear Society publication that addresses nuclear safety criteria for PWRs. This standard is applicable to the design of the Chemical and Volume control system.
- ANSI/CGA G-7.1, provides guidance for breathing air quality and is applicable to parts of the Compressed Air System.

AP1000 DCD Content

For all the items, the DCD discusses the design basis and the safety evaluation, and in addition:

- Compressed air system.
- Plant gas system.
- Primary Sampling System.
- Secondary Sampling System.
- Equipment floor and drainage system.
- Chemical and Volume Control System.

U.S.NRC
United States Nuclear Regulatory Commission
Protecting People and the Environment

158

The compressed air system supplies instrument air for air-operated valves. Service air is supplied throughout the plant to power air-operated tools and for breathing air. High-pressure air supplies air to the MCR emergency habitability system, the generator breaker package, and fire fighting apparatus recharge station.

- Instrument air subsystem.
- Service air.
- High pressure air.
- Component descriptions and operations for the subsystems.

The plant gas system consists of tanks for storage of liquid nitrogen, gaseous nitrogen (tubes), liquid hydrogen and liquid carbon dioxide. In addition there are vaporizers associated with the nitrogen, hydrogen and carbon dioxide systems. The nitrogen system is for pressurizing, blanketing and purging of various plant components. The hydrogen gas portion is to supply hydrogen gas to the main generator as well as to support removal of dissolved oxygen. The CO-2 system is to proved CO-2 gas to purge the main generator.

- Facilities description.
- Component description.
- Tests and inspection.
- Vessel testing.
- Instrumentation requirements.

The primary sampling system is designed to collect liquid and gaseous samples from the primary system in a manner that adheres to the ALARA principle. It utilizes both the continuous and grab sample mode of collection. The samples are used to perform the following under normal and accident conditions:

- Monitor core activity.
- Monitor fuel rod integrity.
- Evaluate ion exchanger and filter performance.
- Evaluate chemicals that may need to be added.
- Maintain acceptable hydrogen levels in the RCS.
- Detect radioactive material leakage.

The secondary sampling system delivers samples of fluids to sample analyzer packages. It is designed to detect impurity ingress and early diagnosis of secondary system chemistry excursions. The analyses that are performed on these samples are the following:

- pH.
- Conductivity levels.
- Dissolved oxygen.
- Residual oxygen scavenger.
- Sodium content.
- Sulfate content.

The equipment floor an drainage system collects liquid wastes during normal operation, startup, shutdown, and refueling. The system is designed to prevent damage to safety-related SSCs resulting from a seismic event. There are no permanent connections between radioactive and nonradioactive piping. Provisions for temporary diversion of contaminated water from normally nonradioactive drains to the liquid radwaste system are included. Drainage in these systems is by gravity.

- General description
  - Radioactive wastes
  - Nonradioactive and potentially radioactive waste drains
  - Chemical waste drains
  - Detergent waste drains
  - Oily waste drains
- Component description (sumps and drain tanks, pumps and valves)
- System operation
- Instrument applications
- Tests and inspections
- Chemical and Volume Control System
  - Primary functions
    - Purification
    - Reactor coolant system inventory control and makeup
    - Chemical shim and chemical control
    - pH control
    - Oxygen control
    - Filling and pressure testing the RCS
    - Borated makeup
  - Component descriptions (pumps, tanks, heat exchangers, demineralizers, filters, valves)
  - Piping requirements
  - Operations under different modes
  - Inspection and testing requirements
  - Instrumentation requirements

GDC 1 - Quality standards and records
GDC 1 is met because instrument air subsystem conforms to RG 1.68.3, the primary sampling system conforms to ASME Class 2 and 3, and the chemical and volume control system meet RG 1.26 by assigning quality group classifications to the system

GDC 2 – Design bases for protection against natural phenomena
GDC 2 is met because the containment penetration piping and isolation valves are classified as safety class 2, seismic category I and the primary sampling system, the equipment floor and drain system, and the chemical and volume control system conform to the regulatory positions of RGs 1.26 and 1.29, which specifies seismic design criteria.

GDC 4 – Environmental and dynamic effects design bases
GDC 4 is met because the plant gas system conforms with RG 1.91, and the equipment floor and drain system is adequately sized to meet flow requirements.

GDC 5 – Sharing of SSCs
GDC 5 is met because the design described in the DCD does not share SSCs with other nuclear units.

GDC 13 – Instrumentation and control
GDC 13 is met because the secondary sampling system is capable of collecting and delivering for analysis samples of fluid from secondary systems.

GDC 14 – Reactor coolant pressure boundary
GDC 14 is met because the chemical and volume control system provides the necessary components to maintain reactor coolant purity to reduce corrosion

GDC 29- Protection against anticipated operational occurrences
GDC 29 is met because the chemical and volume control system includes the necessary components to provide negative reactivity through the injection of borated water.

GDC 60 – Control of releases of radioactive materials to the environment
GDC 60 is met because the equipment floor and drains system is designed to prevent the inadvertent transfer of contaminated fluids to a noncontaminated drainage system for disposal and the chemical and volume control system is capable of confining radioactivity by venting and collecting drainage through closed systems.

GDC 61 – Fuel storage and handling and radioactivity control
GDC 61 is met because the chemical and volume control system is capable of confining radioactivity by venting and collecting drainage through closed systems.

SER Evaluation Findings

- Air-operated valves designed to actuate to in a fail-safe position.
- CAS provides clean, dry, oil-free air.
- Plant gas storage tanks are analyzed as potential missile sources.
- PSS performs the intended functions.
- SSS is capable of collecting and delivering for analysis samples of fluids from secondary systems and has isolation capability.
- The equipment and floor drainage systems designed properly.
- CVS provides inventory control and chemically controlled makeup to the primary system.

U.S.NRC
United States Nuclear Regulatory Commission
Protecting People and the Environment

159

Instrument and compressed air system:

Air-operated valves that are essential for safety shutdown and accident mitigation are designed to actuate to the fail-safe position upon loss of air pressure. The AP1000 design complies with the guidance of ANSI/ISA-S7.3, as it relates to supplying clean, dry, oil-free air to safety-related components, and the guidance of RG 1.68.3, as it relates to the testing of the CAS.

Plant gas system:

The storage tanks are analyzed as potential missile sources. The effects of the plant gas system on main control room habitability are addressed, including explosive gases and burn conditions for those gases.

Primary sampling system:

The NRC staff's review has determined that the design of the PSS is acceptable because it performs the intended function of sampling liquid and gaseous process streams to monitor plant and various system conditions and provides for isolation of the system to limit radiation releases.

Secondary sampling system:

The NRC staff review has verified that the SSS is capable of collecting and delivering for analysis samples of fluids from secondary systems such as the turbine, demineralized water system, and circulating water system. The system provides a grab sample capability as a backup. These are non-safety functions. In addition, the SSS has an isolation capability to prevent leakage of radioactive fluid from the SG boundary.

Equipment floor and drains system:

The equipment and floor drainage systems are non-safety-related and serve no safety-related function except for the backflow preventers in drain lines from containment cavities to the containment sump. Also, the systems are designed to prevent damage to safety-related equipment and floor drain components failure from a seismic event.

Chemical and volume control system:

The applicant compared the AP1000 CVS design to the GDC requirements (GDC 1, 2, 5, 14, 29, 35, 60, and 61) and concluded that it meets these requirements. In addition, the design of the CVS includes the components and piping to provide inventory control and chemically controlled makeup to the primary system. Also, the CVS includes components to isolate containment and preserve the integrity of the reactor coolant pressure boundary. The NRC staff agreed that the system meets the above GDC requirements.

SER Findings re: Safety-related Systems, Seismic II/I Protection and Support Systems -- Process Auxiliary Systems --

- None of the process auxiliary systems are safety-related except that three provide containment isolation:
  - Compressed and instrument air
  - Primary sampling system
  - Chemical volume and control system

  And, the Equipment floor and drain system has safety-related backflow preventers to prevent flooding of safety-related equipment
- No seismic II/I protection is required for these systems
- None of these systems are support systems for other safety-related systems

U.S.NRC
United States Nuclear Regulatory Commission
Protecting People and the Environment

160

- The design is such that, except for containment isolation for three systems, and the backflow preventers in the equipment floor and drain system, these systems are not safety related. They are not necessary to prevent an accident or mitigate the consequences of an accident. The compressed and instrument air is safety class B, seismic category I. The chemical and volume control system has aspects of safety classification from A to C, seismic category I . The primary sampling system isolation varies in safety class from B to C, and is seismic category I.

- These systems can fail in a seismic event and their failure will not cause the failure, due to seismic interaction, of other safety related systems. As a result, seismic II/I protection is not required for them.

- These systems can fail and they will not cause the failure of any safety-related systems, therefore, they do not meet the definition of support system to other safety-related system.

COL Items

The COL applicant will address NUREG-0933, General Safety Issue 43 (Air Systems) as part of training and procedures. Issuance of Generic Letter 88-14, Instrument Air Supply system Problems Affecting Safety-Related Equipment," resolved GSI 43.

U.S.NRC
United States Nuclear Regulatory Commission
Protecting People and the Environment

Air Conditioning, Heating, Cooling, and Ventilation Systems

SER Section 9.4

U.S.NRC
United States Nuclear Regulatory Commission
Protecting People and the Environment

Scope of the Air Conditioning, Heating, Cooling, and Ventilation Systems

- **Nuclear island nonradioactive ventilation system (VBS).**
- **Annex/auxiliary buildings nonradioactive HVAC systems (VXS).**
- **Radiologically controlled area ventilation system (VAS).**
- **Containment recirculation cooling system (VCS).**
- **Containment air filtration system (VFS).**
- **Radwaste building HVAC system (VRS).**
- **Turbine building ventilation system (VTS).**
- **Diesel generator building heating and ventilation system (VZS).**
- **Health physics and hot machine shop HVAC system (VHS).**

U.S.NRC
United States Nuclear Regulatory Commission
Protecting People and the Environment

163

This subchapter actually consists of the 9 sub-subchapters listed in the slide.

Let's take a minute to briefly touch on the safety issues with each of these systems:

- The nuclear island nonradioactive ventilation system serves the MCR, TSC and Class 1E I&C rooms. It is designed to control the radiological habitability in the MCR, and it isolates the HVAC penetrations in the MCR when necessary (high particulate or iodine or extended loss of ac power).

- The annex/auxiliary buildings nonradioactive HVAC systems serve no safety function, except that ductwork that could affect safety-related systems in a seismic event are designated seismic category II (seismic II/I protection). The purpose of the system is to provide conditioned air to maintain acceptable temperatures for workers.

- The radiologically controlled area ventilation system serves the fuel handling area of the aux building and the RCA of the aux and annex buildings, except for the HP and hot machine shop areas. The system serves no safety-related functions, except that ductwork that could affect safety-related systems in a seismic event are designated seismic category II.

- The containment recirculation cooling system controls building air temperature and humidity to provide a suitable environment for equipment operability during operation and shutdown. It serves no safety-related function except that ductwork that could affect safety-related systems in a seismic event are designated seismic category II. The system does not play a role in mitigating consequences of accidents.

- The containment air filtration system serves the containment, the fuel handling area and RCAs of the aux and annex buildings. The system serves no safety-related functions, other than containment isolation and ductwork that could affect safety-related systems in a seismic event are designated seismic category II. Its main purpose is to purge air of airborne radioactivity during normal and shutdown operation modes.

- The radwaste building HVAC system provides conditioned air for workers and ensures air moves from clean to more contaminated areas. It serves no safety related function and is nonseismic. It also prevents unmonitored releases from being released form the radwaste building.

- The turbine building ventilation system maintains acceptable temperatures for equipment operation and provides for removal of chemical fumes from the secondary sampling lab room, the lube oil reservoir and lube oil storage room. It serves no safety-related function and is nonseismic.

- The diesel generator building heating and ventilation system serves the standby DG rooms, electrical equipment modules, and the diesel fuel oil day tank vaults. The system serves no safety-related function and is nonseismic.

- The health physics and hot machine shop HVAC system serves areas in the annex building, personnel decontamination areas, frisking and monitoring facilities, and radiation monitor calibration areas. The system serves no safety-related function and is nonseismic. Its purpose is to provide conditioned air for equipment and personnel and to provide air movement form clean to contaminated areas. It also provides for radiation monitoring of air prior to release to the environment.

SRP Acceptance Criteria

Acceptance criteria are based upon NRC criteria specified in 10 CFR 50, Appendix A, General Design Criteria for Nuclear Power Plants.

Specifically: GDC 2, 4, 5, 19, 60, 61.

U.S.NRC
United States Nuclear Regulatory Commission
Protecting People and the Environment

164

Because this presentation involves 9 sub-subchapters, or 9 different systems, all the acceptance criteria in the above slide don't apply to a given single system.

The next slide explains the GDC criteria.

GDC Criteria

- GDC 2 – Design bases for protection against natural phenomena
- GDC 4 – Environmental and dynamic effects design bases
- GDC 5 – Sharing of SSCs
- GDC 19 – Control room
- GDC 60 – Control of releases of radioactive materials to the environment
- GDC 61 – Fuel storage and handling and radioactivity control

U.S.NRC
United States Nuclear Regulatory Commission
Protecting People and the Environment

165

This slide summarizes the GDC criteria as they apply to the ventilation systems.

GDC 2, applies to seismic events. Even if a system is nonsafety related, you do not want a seismic event to cause the system to damage safety-related equipment, so several of these systems are seismic category II, that is they provide seismic II over I protection.

GDC 4, applies to flooding, internally-generated missiles and piping failures related to the control room.

GDC 5, as it relates to whether shared structures, systems and components important to safety are capable of performing required safety functions. The systems do not share SSCs with other nuclear power units so on this basis the NRC staff concluded that they meet the requirements of GDC 5.

GDC 19, regarding maintaining the control room in a safe habitable condition under accidental conditions by providing adequate protection against radiation and toxic gases. This criterion is only applicable to the nuclear island nonradioactive ventilation system as it serves the control room. The AP1000 design meets the requirements of GDC 19.

GDC 60, regarding the capability to suitably control release of gaseous radioactive effluents to the environment. This GDC is applicable to several of the systems that potentially can release radioactive effluents.

GDC 61, as they relate to the capability of the system to provide appropriate containment, confinement and filtering to limit releases of airborne radioactivity to the environment. This GDC is applicable to the radiologically controlled area ventilation system and the containment air filtration system as these systems are designed to provide containment and confinement.

Other NRC Criteria

- Reg. Guide 1.140, “Design, Inspection and Testing Criteria for Air filtration and Adsorption Units of Normal Atmospheric Cleanup Systems in Light-Water –Cooled Nuclear Power Plants
- NRC IE Bulletin 80-03, “Loss of charcoal from absorber cells”
- Reg. Guide 1.78, “Evaluating the Habitability of a Nuclear Power Plant Control Room During a Postulated Hazardous Chemical Release
- Reg. Guide 1.28, “Quality Assurance Program Requirements”
- Reg. Guide 1.29. “Seismic Design Classification”
- Reg. Guide 1.13, “Spent Fuel Storage Facility Design Basis

U.S.NRC
United States Nuclear Regulatory Commission
Protecting People and the Environment

166

The slide lists other NRC criteria.

Reg. Guide 1.140 specifies requirements for the design, inspection and testing of air filtration and adsorption units for normal atmosphere cleanup systems in LWRs. Floor drain systems are Seismic I.

NRC IE Bulletin 80-03 addresses the loss of charcoal from absorber cells.

Reg. Guide 1.78 provides guidance for evaluating the habitability of a nuclear power plant control room during an accident.

Reg. Guide 1.28 addresses the installation and design of large lead storage batteries for nuclear power plants.

Reg. Guide 1.29 addresses seismic classifications for safety-related systems and for systems that can affect safety-related systems.

Reg. Guide 1.13 addresses ventilation and filtering systems to limit the release of radioactive materials.

Consensus Standards

- SMACNA-1980, “Rectangular Industrial Duct Construction Standards”
- ANSI/ARI 410-91, “Forced-Circulation Air Cooling and Air Heating Coils”
- ARI 620-96, “Self-Contained Humidifiers”
- ANSI/AMCA 500-89, “Testing Methods for Louvers, Dampers, and Shutters”

U.S.NRC
United States Nuclear Regulatory Commission
Protecting People and the Environment

167

There are 28 consensus standards listed in the DCD that are applicable to the design these systems. Four are listed above just for illustration.

- SMACNA-1980, provides guidance for rectangular duct design.
- ANSI/ARI 410-91, provides guidance for forced-circulation air cooling and air heating coils.
- ARI 620-96, provides guidance for self-contained humidifiers.
- ANSI/AMCA 500-89, provides testing methods for louvers, dampers, and shutters.

AP1000 DCD Content

For each of the nine systems, the DCD discusses the following:

- Design basis.
- The safety evaluation.
- The rooms and areas covered by each system.
- Component description.
- Operation for the various areas or rooms.
- Tests and inspection.
- Instrument applications.

U.S.NRC
United States Nuclear Regulatory Commission
Protecting People and the Environment

168

The nine systems are listed on the 3rd slide.

Component description generally including a description of air handling units, air fans, filtration units, filters, charcoal absorbers, electric heating coils, unit heaters, cooling coils, humidifiers, dampers and valves, ductwork and accessories.

Normal and abnormal operation for the various areas or rooms covered by each system.

GDC 2 – Design bases for protection against natural phenomena
GDC 2 is met because the required components of the VBS (nuclear island nonradioactive ventilation system), the annex/auxiliary buildings nonradioactive HVAC system, the radiologically controlled area ventilation system, the containment recirculation cooling system, the containment air filtration system, radwaste building HVAC system, the diesel generator building heating and ventilation system, and the HP hot machine shop HVAC system are designed to regulatory position C1 or C2 of RG 1.29

GDC 4 – Environmental and dynamic effects design bases
GDC 4 is met because the MCR/TSC HVAC subsystem is designed to be compatible with environmental conditions and dynamics effects protecting it against floods, internally-generated missiles, and piping failures.

GDC 5 – Sharing of SSCs
GDC 5 is met because the design described in the DCD does not share SSCs with other nuclear units.

GDC 19 – Control room
GDC 19 is met because the COL applicant is required to demonstrate compliance with the guidance of RG 1.78.

GDC 60 – Control of releases of radioactive materials to the environment
GDC 60 is met because the radiologically controlled area ventilation system conforms to consensus standards for air filtration units as they relate to the control of the release of gaseous radioactive effluents to the environment, the containment air filtration system exhaust if filtered and monitored and then routed to the plant vent in compliance with RG 1.140, the radwaste building HVAC system collects the vented discharges from contaminated areas and provides for particulate removal and radiation monitoring of exhaust air before its release, and the HP hot machine shop HVAC system collects contaminated air and provides for radiation monitoring of exhaust air prior to its release through the plant vent stack

GDC 61 – Fuel storage and handling and radioactivity control
GDC 61 is met because the radiologically controlled are ventilation system and the containment air filtration system, conform to regulatory position C.4 of RG 1.13 as it relates to the capability of the system to provide appropriate containment, confinement and filtering to limit releases.

SER Evaluation Findings

- VBS that penetrate the MCR are seismic Category I for MCR isolation.
- Seismic II/I protection.
- VRS provides removal and monitoring.
- Monitoring is provided to detect leakage.
- Met GDC criteria.

U.S.NRC
United States Nuclear Regulatory Commission
Protecting People and the Environment

169

Those portions of the nuclear island ventilation system (VBS) which penetrate the main control room envelope are safety-related and designed a seismic Category I to provide isolation of the MCR envelope from the surrounding area and outside environment in the event of a design basis accident.

Seismic II/I protection provided for all systems where appropriate HVAC equipment and ductwork whose failure could affect the operability of safety-related systems or components are designed to seismic Category II requirements.

The radwaste building ventilation system (VRS) collects vented discharges from potentially contaminated areas and provides for radioactive particulate removal and radiation monitoring of exhaust air before its release through the plant vent stack.

Radiological monitoring is provided in the turbine building in the condenser air removal, SG blowdown, circulating water, and main steam systems to detect system leakage of any potential radioactive contamination.

GDC criteria
GDC 2 (natural phenomena); applies to seismic events. Even if a system is nonsafety related, you don't want a seismic event to cause the system to damage safety-related equipment. The staff concluded the design met GDC 2 because seismic II/I protection was provided when appropriate. This GDC is applicable to all nine subsystems.

GDC 4 (flooding, internally-generated missiles and piping failures); On the basis that the MCR/TSC HVAC subsystem is designed to accommodate and be compatible with environmental conditions and considered dynamic effects, the control room habitability system satisfy GDC 4, as it relates to protecting the system against floods, internally-generated missiles, and piping failures. This GDC is only applicable to the nuclear island nonradioactive ventilation system.

GDC 5 (independence from other units); as it relates to whether shared structures, systems and components important to safety are capable of performing required safety functions. The staff concluded that because the systems do not share SSCs with other nuclear power units the design meets the requirements of GDC 5. All the subsystems met this GDC.

GDC 19 (maintain control room in safe condition); regarding maintaining the control room in a safe habitable condition under accidental conditions by providing adequate protection against radiation and toxic gases. This criterion is only applicable to the nuclear island nonradioactive ventilation system as it serves the control room. The staff concluded that the AP1000 design meets the requirements of GDC 19 because it conforms to Reg. Guide 1.78.

GDC 60 (control release of gaseous radioactive effluents); regarding the capability to suitably control release of gaseous radioactive effluents to the environment. Control could be through filtering of the release, by routing it to another system, or by terminating the release. This GDC is applicable to several of the systems that potentially can release radioactive effluents. The staff concluded that this GDC was met by all the subsystems that could potentially release radioactive effluents to the environment:

- Radiologically controlled area ventilation system.
- Containment air filtration system.
- Radwaste building HVAC system.
- Turbine building ventilation system.
- Health physics and hot machine shop HVAC system.

GDC 61 (provide containment, confinement and filtering of air); as they relate to the capability of the system to provide appropriate containment, confinement and filtering to limit releases of airborne radioactivity to the environment. This GDC is applicable to the radiologically controlled area ventilation system and the containment air filtration system as these systems are designed to provide containment, confinement and filtering prior to release.

SER Findings re: Safety-related Systems, Seismic II/I Protection and Support Systems

-- Air Conditioning, Heating, Cooling, and Ventilation --

- The following are safety-related functions:
  - The VBS is non-safety related, except for its function to monitor and isolate the MCR HVAC on high radiological concentrations
  - Containment isolation function of the VFS system
- Seismic II/I protection is required by the following:
  - VXS system in nuclear island
  - VAS system in nuclear island
  - VBS tornado dampers at outside air intake and MCR fire dampers
  - VCS system in nuclear island
  - VFS system debris screens
- Some support systems include:
  - VBS controls temperature in Class 1E electrical rooms, and in other rooms with safety-related equipment

U.S.NRC
United States Nuclear Regulatory Commission
Protecting People and the Environment

170

- Safety-related items include the following:
  - The nuclear island nonradioactive ventilation system (VBS) monitors and isolates the main control room HVAC on high rad concentrations. These components of the system are safety class C, seismic category I.
  - The VFS system provides for containment isolation. These components are either safety class B or C, seismic category I.
- Seismic II/I protection is provided by the Annex/auxiliary building nonradioactive HVAC system (VXS), the Radiologically Controlled area ventilation system (VAS), the Containment Recirculation Cooling system (VCS), and the Containment air filtration system (VFS) in the nuclear island or in other locations where failure could affect safety-related equipment. The seismic category I, VFS debris screens are located in piping between the containment atmosphere and the containment isolation valves to prevent entrainment of debris through the supply and exhaust opening that may prevent a tight valve shutoff against containment pressure.
- The only support system is the VBS system as it controls the temperature of Class 1E electrical rooms and other rooms with safety–related equipment.

COL Items

The COL will implement a program to maintain compliance with ASME AG-1, ASME N509, ASME N510 and RG 1.140 for portions of the VBS and the VFS identified in subsection 9.4.1 and 9.4.7 of the DCD. The COL will also provide a description of the MCR/TSC HVAC subsystem's recirculation mode during toxic emergencies, and how the subsystem equipment isolates and operates as applicable, consistent with toxic issues, including conformance with RG 1.78.

U.S.NRC
United States Nuclear Regulatory Commission
Protecting People and the Environment

171

As the slide states, this COL applies to the nuclear island nonradioactive ventilation system (VBS) and the containment air filtration system (VFS).

The COL focuses on the ability of the subsystems to isolate and go into recirculation mode during emergencies.

AP1000 Secondary Systems

Module 6
SER Section 10

INSTRUCTOR: Jack Rosenthal

October 2008

U.S.NRC
United States Nuclear Regulatory Commission
Protecting People and the Environment

Learning Objectives

- Class Participants are expected to understand:
  - General layout and operation of the AP1000 Steam and Power Conversion System.
  - Non-Safety Related Startup Feedwater System.
  - SRP acceptance criteria.
  - SER Evaluation Findings.

U.S.NRC
United States Nuclear Regulatory Commission
Protecting People and the Environment

173

Insight: AP1000 has a standard secondary side design. Uses non- safety grade startup feedwater system rather than safety related emergency feedwater. To meet ATWS rule Commission provided exemption. Reliance on PRHR.

Subsidiary objective: Understand Turbine Generator Control, Protection and Trips, Turbine Disk/Rotor Integrity, High-Energy Turbine Missiles.

Subsidiary objective: Main Steam Supply - Operation in Normal and Postulated Accident Conditions, System Materials Selection, The Effects of: External Missiles, Internally Generated Missiles, Pipe Whip, Jet Impingement Forces Associated With Pipe Breaks.

Secondary Systems
10.1 Overview

- Steam from both SG enters turbine, closed loop system.
- Turbine bypass accepts 40% full-power steam flow.
- Protective features:
  - Safety valves for overpressure protection.
  - Loss of External Electrical Load and/or Turbine Trip Protection.
  - Main Steamline Overpressure Protection.
  - Loss of Main Feedwater Flow Protection.
  - Turbine Overspeed Protection.
  - Turbine Missile Protection.
  - Radioactivity Protection.
  - Erosion-Corrosion Protection.

U.S.NRC
United States Nuclear Regulatory Commission
Protecting People and the Environment

174

The turbine exhaust steam is condensed and deaerated in the main condenser. A closed-loop circulating water system (CWS) removes the heat rejected in the main condenser. The condensate pumps take suction from the condenser and deliver the condensate water through heaters to the suction of the main feedwater booster pump. The water is next discharged to the suction of the main feedwater pumps, which then discharge the feedwater through feedwater heaters to the two steam generators.

Spring-loaded safety valves are provided on both main steamlines for overpressure protection, in accordance with Section III of the American Society of Mechanical Engineers Boiler and Pressure Vessel Code (ASME Code). The pressure relief capacity of the safety valves allows the energy generated at the high-flux reactor trip setting to be dissipated through this system. The design capacity of the main steam safety valves equals or exceeds 105 percent of the design steamflow of the nuclear steam supply system (NSSS) at an accumulation pressure not exceeding 110 percent of the design pressure of the main steam system.

Secondary Systems
10.2 Turbine Generator

- COL Items:
  - Submit to NRC staff for review turbine maintenance and inspection program.
  - Have available plant-specific turbine rotor test data and calculated toughness curves that support the material property assumptions in the turbine rotor analysis.

U.S.NRC
United States Nuclear Regulatory Commission
Protecting People and the Environment

175

The Combined License holder will submit to the NRC staff for review prior to fuel load, and then implement a turbine maintenance and inspection program. The program will be consistent with the maintenance and inspection program plan activities and inspection intervals identified in subsection 10.2.3.6. The Combined License holder will have available plant-specific turbine rotor test data and calculated toughness curves that support the material property assumptions in the turbine rotor analysis after the fabrication of the turbine and prior to fuel load.

The orientation of the turbine generator is such that a high-energy missile would be directed at a 90-degree angle away from safety-related SSCs. However, at a multiple-plant site, facility orientation must assure that high-energy turbine missiles from one unit will not affect the safety-related SSCs of another unit.

Secondary Systems
10.2 Turbine Generator

- ITAAC Section 10.2
  - Turbine-generator trip from MCR.
  - Functional arrangement.
  - Turbine-generator trip Protection and Safety Monitoring System.
  - Turbine-generator trip from DAS.

U.S.NRC
United States Nuclear Regulatory Commission
Protecting People and the Environment

176

MCR - Main Control Room.
DAS - Diverse Actuation System.

In the case of events involving a turbine trip, Westinghouse assumed that a LOOP and the resulting coastdown of the reactor coolant pumps (RCPs) occurs 3 seconds after the turbine trip. DCD Tier 2, Section 8.2, provides the basis for the 3-second delay. That section describes the electrical design features of the AP1000, the electrical system response to a turbine trip, and the combined license (COL) applicant interfaces that support the 3-second assumption.

COL applicants need to consider delay in design and configuration of switchyard. Interface with Chapter 8, power systems, reviewers needed.

Secondary Systems
10.2 Turbine Generator

- SRP acceptance criteria:
  - Overspeed protection.
  - Inservice inspection program for valves.
  - Materials selection.
  - Fracture toughness of disk.
  - Pre-service inspection.
  - Turbine rotor design.
  - Inservice Inspection of turbine.

U.S.NRC
United States Nuclear Regulatory Commission
Protecting People and the Environment

177

SRP 10.2 acceptance criteria:

A. Turbine control and overspeed protection system will prevent overspeed.
B. The turbine main steam stop and control valves and the reheat steam stop and intercept valves should protect the turbine from exceeding set speeds.
C. The Turbine Generator System should have the capability to permit periodic testing.

2. Materials Selection.

A. Testing of the actual material of the turbine rotor to establish the KIc value at normal operating temperature.
B. Testing of the actual material of the turbine rotor with an instrumented Charpy machine and a fatigue precracked specimen.
C. Charpy test.
D. Estimating “lower bound” values of KIc at various temperatures using the equivalent energy concept.

3. Pre-service Inspection.

A. Forged or welded rotors should be rough machined prior to heat treatment.
B. Each finished forged or welded rotor should be subjected to 100% volumetric (ultrasonic), surface, and visual examinations.
C. Finish machined bores, keyways, and drilled holes should be subjected to magnetic particle or liquid penetrant examination.
D. Each turbine rotor assembly should be spin tested at 5% above the maximum speed anticipated

4. Turbine Rotor Design.

The turbine assembly should be designed to withstand normal conditions, anticipated transients, and accidents resulting in a turbine trip without loss of structural integrity.

A. The design overspeed of the turbine should be 5% above the highest anticipated speed resulting from a loss of load.
B. The combined stresses of low-pressure turbine rotor at design overspeed due to centrifugal forces, interference fit, and thermal gradients should not exceed 0.75 of the minimum specified yield strength of the material.
C. The turbine shaft bearings should be able to withstand any combination of the normal operating loads, anticipated transients, and accidents resulting in a turbine trip.
D. The natural critical frequencies of the turbine shaft assemblies existing between zero speed and 20% overspeed should be controlled.
E. The turbine rotor design should facilitate inservice inspection.

5. Inservice Inspection.

The inservice inspection program for the steam turbine assembly should provide assurance that rotor flaws that might lead to brittle failure of a rotor at speeds up to design speed will be detected.

The inservice inspection and maintenance program for the turbine assembly should comply with the manufacturers recommendations.

Secondary Systems
10.2 Turbine Generator

- SER Evaluation Findings:
  - Meets requirements for turbine overspeed protection system.
  - Integrity of the turbine rotor is acceptable.
  - Provides reasonable assurance that the probability of failure due to missile generation is low during normal operation, including transients up to design overspeed.

U.S.NRC
United States Nuclear Regulatory Commission
Protecting People and the Environment

178

The NRC concluded that the AP1000 design is acceptable and meets the requirements of GDC 4 with respect to the protection of SSCs important to safety from the effects of turbine missiles. The applicant has met these requirements by providing a turbine overspeed protection system to control the turbine action under all operating conditions. This system also assures that a full-load turbine trip will not cause the turbine to overspeed beyond acceptable limits, thus resulting in turbine missiles.

With the resolution of open items delineated in FSER Section 10.2.9, the NRC concluded that the integrity of the turbine rotor is acceptable and meets the relevant requirements of GDC 4 of Appendix A to 10 CFR Part 50. This conclusion is based upon the ability of the applicant to demonstrate that its design meets the requirements of GDC 4 with respect to the use of materials with acceptable fracture toughness, adequate design, and the requirements for PSIs and ISIs. The applicant has also described its program for assuring the integrity of low-pressure turbine rotors, which includes the use of suitable materials of adequate fracture toughness, conservative design practices, PSI and ISI, and valve testing. This provides reasonable assurance that the probability of failure due to missile generation is low during normal operation, including transients up to design overspeed.

Secondary Systems
10.3 Main Steam Supply System

- The function of the MSSS is to transport steam from the steam generators to the high-pressure turbine.
- Safety related components include integral SG flow limiter, MSIV, MSIV bypass, MSRV.
- Materials Selection.
- Erosion/corrosion program.

U.S.NRC
United States Nuclear Regulatory Commission
Protecting People and the Environment

179

Safety-related the main steamline piping from the steam generator up to the pipe restraint located on the wall between the auxiliary building and the turbine building, including the main steam isolation valve and the main steam isolation bypass valves.

- the inlet piping from the main steamline to the main steam safety valve discharge piping and vent stacks and to the power-operated relief line piping, including block valve and power-operated relief valves.
- the instrumentation tubing up to, and including, the main steamline pressure instrument root valves.
- the vent line and nitrogen connection on the main steamline up to, and including, the first isolation valve.
- the main steam drain condensate pot located upstream of the main steam isolation valves, as well as the drain piping up to, and including, the first isolation valve.
- the condensate drain piping from the outlet of the isolation valve to the restraint on the wall between the auxiliary building and the turbine building.

The remainder of the MSSS is non-safety-related.

The staff reviewed DCD Tier 2, Section 10.3.6, “Steam and Feedwater System Materials,” in accordance with Section 10.3.6, “Steam and Feedwater System Materials,” of the SRP. The materials selection, fabrication, and fracture toughness of ASME Code Class 2 and 3 pressure boundary components in the steam and feedwater system are acceptable if they meet the relevant requirements of 10 CFR 50.55a, “Codes and Standards”: Appendix A to 10 CFR Part 50, GDC 1, “Quality Standards and Records,” and GDC 35, “Emergency Core Cooling System”; and Appendix B to 10 CFR Part 50, “Quality Assurance Criteria.”

Carbon steel with only carbon and manganese alloying agents will not be used for applications subject to erosion-corrosion. GL 89-08, “Erosion/Corrosion-Induced Pipe Wall Thinning.”

Secondary Systems
10.3 Main Steam Supply System

- COL Items
  - AP1000 design can be used at either single-unit or multiple-unit sites.
  - If more than one unit were built on the same site, none of the safety-related systems would be shared.
  - GDC 5, “Sharing of Structures, Systems, and Components,” with respect to the capability of shared SSCs important to safety to perform their required safety functions.

U.S.NRC
United States Nuclear Regulatory Commission
Protecting People and the Environment

180

Although the AP1000 design can be used at either single-unit or multiple-unit sites, DCD Tier 2, Section 3.1.1 states that the AP1000 design is a single-unit plant. Further, if more than one unit were built on the same site, none of the safety-related systems would be shared. Should a multiple-unit site be proposed, the COL applicant must apply for the evaluation of the units’ compliance with the requirements of GDC 5, “Sharing of Structures, Systems, and Components,” with respect to the capability of shared SSCs important to safety to perform their required safety functions.

Secondary Systems
10.3 Main Steam Supply System

- SRP Acceptance Criteria:
  - GDC 2 based on meeting the guidance of Regulatory Guide 1.29, Seismic Design Classification.
  - GDC 4 with respect to the ability of the safety-related portions of the system to withstand the effects of external missiles and internally generated missiles, pipe whip, and jet impingement forces and RG 1.115, Protection Against Low-Trajectory Turbine Missiles.
  - GDC 5, "Sharing of Structures, Systems, and Components."

U.S.NRC
United States Nuclear Regulatory Commission
Protecting People and the Environment

181

GDC 2
Acceptance of GDC 2 is based on meeting the guidance of Regulatory Guide 1.29, Position C.1 for safety-related portions and Position C.2 for nonsafety-related portions.

GDC 4
GDC 4 with respect to the ability of the safety-related portions of the system to withstand the effects of external missiles and internally generated missiles, pipe whip, and jet impingement forces associated with pipe breaks. Acceptance of GDC 4 is based on the guidance of Regulatory Guide 1.115, Position C.1, as it relates to the protection of SSCs important to safety from the effects of turbine missiles. In addition, the system design should adequately consider water (steam) hammer and relief valve discharge loads to assure that system safety functions can be performed and should assure that operating and maintenance procedures include adequate precautions to prevent water (steam) hammer and relief valve discharge loads. The system design should also include protection against water entrainment.

GDC 5
Compliance with GDC 5 requires that structures, systems, and components important to safety shall not be shared by nuclear power units unless it can be shown that such sharing will not significantly impair their ability to perform their intended safety functions, including, in the event of an accident in one unit, an orderly shutdown and cooldown of the remaining units. Meeting the requirements of GDC 5 provides assurance that the main steam system and its associated components will continue performing their required safety functions even if they are shared by multiple nuclear power units.

Secondary Systems
10.3 Main Steam Supply System

- SRP Acceptance Criteria, continued:
  - GDC 34, "Residual heat removal," as related to the system function of transferring residual and sensible heat from the reactor system.
  - Issue 1 in NUREG-0138, "Staff Discussion of Fifteen Technical Issues Listed in Attachment to November 3, 1976, Memorandum From Director, NRR, to NRR Staff," which specifies the allowable credit that can be taken for valves downstream of the main steam isolation valve (MSIV) to limit blowdown of a second steam generator in the event of a steamline break upstream of the MSIV.

U.S.NRC
United States Nuclear Regulatory Commission
Protecting People and the Environment

182

SRP 10.3:

GDC 34
Acceptance of GDC 34 is based on the following:

A. The positions in Branch Technical Position 5-4, as they relate to the design requirements for residual heat removal (RHR).

B. Issue Number 1 of NUREG-0138, as it relates to credit being taken for all valves downstream of the main steam isolation valves (MSIVs) to limit blowdown of a second steam generator if a steamline were to break upstream of the MSIV.

Secondary Systems
10.3 Main Steam Supply System

- SRP Acceptance Criteria, continued:
  - 10 CFR 50.63, Loss of all alternating current power, based on meeting Regulatory Guide 1.155, Station Blackout as it relates to the MSSS design.
  - AP1000 has non-safety grade startup feedwater system.
  - Westinghouse requested and Commission approved exemption to 10 CFR 50.62, ATWS rule, which requires emergency feedwater.

U.S.NRC
United States Nuclear Regulatory Commission
Protecting People and the Environment

183

5. Acceptance of 10 CFR 50.63 is based on meeting Regulatory Guide 1.155 as it relates to the MSSS design.

As discussed in SER Section 15.2.9, the NRC staff concluded that Westinghouse's request for exemption to the ATWS Rule of 10 CFR 50.62 is acceptable. Specifically, the exemption request applies to 10 CFR 50.62(c)(1), which requires auxiliary or emergency feedwater as an alternate system for decay heat removal during an ATWS event. The AP1000 design relies on the PRHR in lieu of an auxiliary or emergency feedwater system as its safety-related method of removing decay heat. The NRC staff concluded that the AP1000 design meets the underlying purpose of the ATWS Rule by relying on the PRHR system to remove the decay heat. In accordance with 10 CFR 50.12(a)(2)(ii) for the AP1000 design, the requirement for an emergency feedwater system is not necessary to achieve the underlying purpose of 10 CFR 50.62(c)(1). Therefore, the exemption request is acceptable.

§ 50.62 Requirements for reduction of risk from anticipated transients without scram (ATWS) events for light-water-cooled nuclear power plants.

(c) *Requirements*. (1) Each pressurized water reactor must have equipment from sensor output to final actuation device, that is diverse from the reactor trip system, to automatically initiate the auxiliary (or emergency) feedwater system and initiate a turbine trip under conditions indicative of an ATWS. This equipment must be designed to perform its function in a reliable manner and be independent (from sensor output to the final actuation device) from the existing reactor trip system.

Secondary Systems
10.3 Main Steam Supply System

- SRP 10.3.6, Steam and Feedwater Systems Materials
  - RG 1.84, Design, Fabrication, and Materials Code Case Acceptability, ASME Section III.
  - RG 1.71, Welder Qualification for Areas of Limited Accessibility.
  - RG 1.50, Control of Preheat Temperature for Welding of Low-Alloy Steel.
  - RG 1.37, Quality Assurance Requirements for Cleaning of Fluid Systems and Associated Components of Water-Cooled Nuclear Power Plants.
  - 10 CR 50.55a, Codes and standards, ASME Section III.

U.S.NRC
United States Nuclear Regulatory Commission
Protecting People and the Environment

184

SRP 10.3.6:

1. Materials Selection and Fabrication of Class 2 and 3 Components
   A. The materials specified for use in Class 2 and 3 components should conform to Appendix I to Section III of the Code and to Parts A, B, and C of Section II of the Code.
   B. Regulatory Guide 1.84, describes acceptable Code Cases that may be used in conjunction with the above specifications. Appendix IV to Section III of the Code provides requirements for approval of new materials.
   C. Regulatory Guide 1.71 provides the following guidelines for assuring the integrity of welds in locations of restricted direct physical and visual accessibility.
      i. The performance qualification should require testing of the welder under simulated conditions when conditions of accessibility to production welds are less than 30 to 35 cm (12 to 14 inches) in any direction from the joint.
      ii. Requalification should be required for significantly different restricted accessibility conditions or when any essential welding variables listed in Code Section IX are changed.
   D. Regulatory Guide 1.50 provides methods to control preheat temperatures for welding low alloy steel. For carbon steel and low alloy steel materials, Section III, Appendix D, Article D-1000 of the ASME Code specifies preheat temperatures.
   E. Regulatory Guide 1.37 and ANSI Standard N45.2.1-1973, "Cleaning of Fluid Systems and Associated Components During Construction Phase of Nuclear Power Plants," describe acceptable procedures for cleaning and handling Class 2 and 3 components of the steam and feedwater systems.
   F. Acceptance criteria for nondestructive examination of tubular products are provided in the relevant paragraphs of Subsections NC and ND of Section III of the ASME Code.

2. Fracture Toughness of Class 2 and 3 Components The fracture toughness properties of the ferritic materials of these components should meet the following requirements of the editions and addenda of Section III of the Code, as specified in 10 CFR 50.55a:

   A. NC-2300, "Fracture Toughness Requirements for Material" (Class 2).
   B. ND-2300, "Fracture Toughness Requirements for Material" (Class 3).

Secondary Systems
10.3 Main Steam Supply System

- COL Items:
  - Multiple-unit site.
  - Erosion/Corrosion program.
  - Turbine maintenance and inspection program.

U.S.NRC
United States Nuclear Regulatory Commission
Protecting People and the Environment

185

Although the AP1000 design can be used at either single-unit or multiple-unit sites, DCD Tier 2, Section 3.1.1 states that the AP1000 design is a single-unit plant. Further, if more than one unit were built on the same site, none of the safety-related systems would be shared. Should a multiple-unit site be proposed, the COL applicant must apply for the evaluation of the units' compliance with the requirements of GDC 5, "Sharing of Structures, Systems, and Components," with respect to the capability of shared SSCs important to safety to perform their required safety functions.

Final Safety Evaluation Report Related to Certification of the AP1000 Standard Design (NUREG-1793): F. COMBINED LICENSE ACTION ITEMS
The COL holder will develop an erosion corrosion monitoring program for carbon steel portions of the steam and power conversion systems that contain water or wet steam.

Pursuant to 10 CFR 50.91 and 50.92, within 3 years of obtaining a COL, the COL holder will submit to the staff a turbine maintenance and inspection program for review. The COL applicant will have plant-specific turbine rotor test data and calculated toughness curves that support the material property assumptions in the turbine rotor analysis.

Also, the COL applicant is responsible for the site specific configuration of the plant circulating water system (including piping design pressure), the cooling tower, or other site-specific heat sink.

Secondary Systems
10.3 Main Steam Supply System

- SER Evaluation Findings:
  - Conforms to the requirements of GDC 2, 4, 5, and 34. Therefore, the design of MSSS is acceptable.
  - The staff concludes that the AP1000 steam and feedwater system materials will be acceptable since they meet the acceptance criteria of SRP 10.3.6 and satisfy the applicable requirements of 10 CFR 50.55a; Appendix A to 10 CFR Part 50, GDC 1 and 35; and Appendix B to 10 CFR Part 50.

U.S.NRC
United States Nuclear Regulatory Commission
Protecting People and the Environment

186

As described above, the staff has reviewed the MSSS in accordance with Section 10.3 of the SRP and finds that the system design conforms to the requirements of GDC 2, 4, 5, and 34. Therefore, the design of MSSS is acceptable.

The staff concludes that the AP1000 steam and feedwater system materials will be acceptable since they meet the acceptance criteria of SRP 10.3.6 and satisfy the applicable requirements of 10 CFR 50.55a; Appendix A to 10 CFR Part 50, GDC 1 and 35; and Appendix B to 10 CFR Part 50.

Secondary Systems
10.4 Other Features

- Scope
  - Main Condensers.
  - Main Condenser Evacuation System.
  - Turbine Gland Sealing System.
  - Turbine Bypass System.
  - Circulating Water System.
  - Condensate Cleanup System.
  - Condensate and Feedwater System.
  - Steam Generator Blowdown System.
  - Auxiliary Feedwater System.

U.S.NRC
United States Nuclear Regulatory Commission
Protecting People and the Environment

187

These are non-safety systems with the exception of the auxiliary feedwater which is the focus of the remaining portion of this presentation.

Explain why these systems are standard systems and why you will discuss the Auxiliary Feedwater System with the remaining slides.

Secondary Systems
10.4.9 Auxiliary Feedwater System

- The safety functions of the startup feedwater system are to provide for containment isolation, steam generator isolation and feedwater isolation following design basis events.
- The startup feedwater pumps automatically supply feedwater to the steam generators for heat removal from the reactor coolant system.
- The heat removal function of the startup feedwater system is nonsafety-related.
- The startup feedwater system avoids the need for actuation of the safety-related passive core cooling system.

U.S.NRC
United States Nuclear Regulatory Commission
Protecting People and the Environment

188

10.4.9.1.2 Power Generation Design Basis

- During normal plant startup, shutdown or hot standby, feedwater can be supplied through the startup feedwater control valves to the steam generators using either a booster/main feedwater pump drawing water from the deaerator storage tank (refer to subsection 10.4.7), or using the startup feedwater pumps drawing water from the condensate storage tank.
- In the event of loss of the main feedwater system, the startup feedwater pumps automatically supply feedwater to the steam generators for heat removal from the reactor coolant system. The heat removal function of the startup feedwater system is nonsafety-related. The startup feedwater system avoids the need for actuation of the safety-related passive core cooling system. Following the transient, the system refills the steam generators and supports reactor coolant system cooldown.
- One operating startup feedwater pump delivers sufficient flow to the steam generators to avoid actuation of the passive core cooling system following a reactor trip. The maximum flow available from two operating startup feedwater pumps does not result in overcooling the reactor coolant system, overfilling the steam generators, or inputting excessive mass/energy to containment following a main steam line break.
- The startup feedwater pumps use the condensate storage tank as a water supply source. A sufficient volume of feedwater is available from the condensate storage tank (refer to subsection 9.2.4) to achieve cold shutdown, based on 8 hours of operation at hot standby conditions and subsequent cooldown of the reactor coolant system within 6 hours to conditions which permit operation of the normal residual heat removal system.
- The startup feedwater pumps are headered at the pump discharge, and a separate line runs from the header to each steam generator.
- For a main feedwater or main steam line break (MSLB) inside the containment, the startup feedwater lines provide a nonsafety-related path for the addition of feedwater to the remaining intact loop if ac power is available.
- For a main feedwater line break upstream of the main feedwater isolation valve (outside of the containment), the startup feedwater lines provide a nonsafety-related path for the addition of feedwater to maintain steam generator level if ac power is available.
- Two startup feedwater pumps are provided with a single pump capable of satisfying the startup feedwater system flow demand for decay heat removal. These pumps automatically start and maintain steam generator water level when the main feedwater system is unavailable.
- In the event of loss of normal ac power, the startup feedwater pumps and associated motor operated isolation valves are powered by the onsite standby ac power supply (diesels). Each of the two startup feedwater pumps is powered by its respective standby diesel.

Secondary Systems
10.4.9 Auxiliary Feedwater System

- The startup feedwater system is not required to supply feedwater under accident conditions.
- The startup feedwater system is expected to be available as a nonsafety-related, first line of defense to provide a source of feedwater for the steam generators.
- Following the transient, the system refills the steam generators and supports reactor coolant system cooldown.

U.S.NRC
United States Nuclear Regulatory Commission
Protecting People and the Environment

189

Design basis continued.

Secondary Systems
10.4.9 Auxiliary Feedwater System

- ITAAC
  - Functional arrangement of the Startup Feedwater System.
  - Feedwater System provides startup feedwater flow from the Condensate Storage Tank to the Steam Generator.
  - Controls and Displays in the Main Control Room.
  - The functional arrangement of the Condensate System.
  - Displays of the parameters in the Main Control Room.

U.S.NRC
United States Nuclear Regulatory Commission
Protecting People and the Environment

190

Startup Feedwater System
Table 2.4.1-2
Inspections, Tests, Analyses, and Acceptance Criteria
Design Commitment Inspections, Test, Analyses Acceptance Criteria

1. The functional arrangement of the Startup Feedwater System is as described in the Design Description of this Section 2.4.1. Inspection of the as-built system will be performed. The as-built Startup Feedwater System conforms with the functional arrangement as described in the Design Description of this Section 2.4.1.
2. The Feedwater System provides startup feedwater flow from the Condensate Storage Tank to the Steam Generator System for heat removal from the Reactor Coolant System. Testing will be performed to confirm that each of the startup feedwater pumps can provide water from the Condensate Storage Tank to both steam generators. Each Feedwater System startup feedwater pump provides a flow rate greater than or equal to 260 gpm to each steam generator system at a steam generator secondary side pressure of at least 1106 psia.
3. Controls exist in the Main Control Room to cause the components identified in Table 2.4.1-1 to perform the listed function. Testing will be performed on the components in Table 2.4.1-1 using controls in the Main Control Room. Controls in the Main Control Room operate to cause the components listed in Table 2.4.1-1 to perform the listed functions.4. Displays of the parameters identified in Table 2.4.1-1 can be retrieved in the Main Control Room. Inspection will be performed for retrievability of parameters in the Main Control Room. The displays identified in Table 2.4.1-1 can be retrieved in the Main Control Room.

Condensate System
Table 2.4.6-2
Inspections, Tests, Analyses, and Acceptance Criteria
Design Commitment Inspections, Test, Analyses Acceptance Criteria

1. The functional arrangement of the Condensate System is as described in the Design Description of this Section 2.4.6. Inspection of the as-built system will be performed. The as-built Condensate System conforms with the functional arrangement as described in the Design Description of Section 2.4.6.
2. Displays of the parameters identified in Table 2.4.6-1 can be retrieved in the Main Control Room. Inspection will be performed for retrievability of the parameters in the Main Control Room. The displays identified in Table 2.4.6-1 can be retrieved in the Main Control Room.

Secondary Systems
10.4.9 Auxiliary Feedwater System

- SRP Acceptance Criteria
  - Redundancy.
  - Electrical supplies.
  - Environmental conditions.
  - Internal flooding.
  - Natural phenomena.
  - QA Program.
  - Design reliability assurance program (DRAP) and is under the scope of the Maintenance Rule (10 CFR 50.65).
  - Graded safety classifications and graded requirements for instrument and control systems based on the importance to safety of their function and their ability to meet reliability availability missions.

U.S.NRC
United States Nuclear Regulatory Commission
Protecting People and the Environment

191

SRP 10.4.9:
Because the passive design philosophy departs from current licensing practice, the NRC staff may not require the non-safety-related active Startup Feedwater System to meet all the safety-related criteria specified in Section 10.4.9, "Auxiliary Feedwater System," of the SRP. However, the availability of the system must be ensured when needed for its defense-in-depth roles. Consequently, regulatory oversight measures are considered for those significant non-safety active systems.

The staff's review considered whether the design of the Startup Feedwater System:

- has sufficient redundancy to ensure defense-in-depth functions.
- has electric supplies from both normal station alternating current (ac) and onsite non-safety-related ac power supplies that are separated to the extent practicable.
- is designed and arranged for conditions or an environment anticipated during and after events to ensure operability, maintenance accessibility, and plant recovery.
- is protected against internal flooding and other in-plant hazards, including the effects of pipe ruptures, jet impingement, fires, and missiles.
- can withstand the effects of natural phenomena (e.g., earthquakes, tornados, and floods) without the loss of capability to perform required functions.
- has an associated QA program.
- is included in the design reliability assurance program (DRAP) and is under the scope of the Maintenance Rule (10 CFR 50.65) to ensure proper and effective maintenance, surveillance, and inservice inspection and testing.
- has graded safety classifications and graded requirements for instrument and control systems based on the importance to safety of their function and their ability to meet reliability availability missions.
- has proper administrative controls for shutdown configurations.
- is consistent with guidance in RG 1.29, BTP ASB 10-1, and BTP SRXB 5-1 concerning seismic classification, power diversity, and design of residual heat removal systems.
- is consistent with guidance in NUREG-0737, "Clarification of TMI Action Plan Requirement," and NUREG-0611 concerning generic improvements to the Startup Feedwater System design, Technical Specifications, and Startup Feedwater System reliability.

Secondary Systems
10.4.9 Auxiliary Feedwater System

- SRP 10.4.9 Acceptance Criteria (Continued)
  - Design reliability assurance program (DRAP).
  - Within scope of the Maintenance Rule (10 CFR 50.65).
  - Graded safety classifications and graded requirements for instrument and control systems based on the importance to safety and meet reliability mission.
  - RTNSS (regulatory treatment of non-safety systems)

U.S.NRC
United States Nuclear Regulatory Commission
Protecting People and the Environment

192

RTNSS - Regulatory Treatment of Non-Safety Systems discussed in more detail next week.

Secondary Systems
10.4.9 Auxiliary Feedwater System

- SER Evaluation Findings
  - On the basis of its review, the staff concludes that the Startup Feedwater System design meets the review criteria for non-safety systems serving defense-in-depth functions.

U.S.NRC
United States Nuclear Regulatory Commission
Protecting People and the Environment

193

NRC regulation of non-safety systems based on defense and depth and PRA.

Is accepted based on D-RAP and RTNSS.

AP1000 Accident Analysis

Module 7
SER Section 15

INSTRUCTOR: Jack Rosenthal
October 2008

U.S.NRC
United States Nuclear Regulatory Commission
Protecting People and the Environment

Transient and Accident Analysis

- Learning Objectives
  - Overview of Chapter 15 Accident Analyses.
  - DCD Description of Accident Analyses.
  - SRP acceptance criteria for these events.
  - SER Evaluation Findings.
  - Passive systems that support the mitigation of these events.

U.S.NRC
United States Nuclear Regulatory Commission
Protecting People and the Environment

195

Westinghouse DCD and staff SER follow formalism of NUREG-0800, Standard Review Plan. The DCD follows pattern of current generation of PWRs modified to account for passive safety features.

Transient and Accident Analysis Acceptance Criteria

- 10 CFR Part 20, “Standards for Protection Against Radiation.”
- 10 CFR Part 50, “Domestic Licensing of Production and Utilization Facilities.”
- 10 CFR 50.46, Acceptance criteria for emergency core cooling systems for light-water nuclear power reactors.
- 10 CFR Part 100, “Reactor Site Criteria.”
- 10 CFR Part 52, “Early Site Permits; Standard Design Certification; and Combined Licenses for Nuclear Power Plants.”
- 10 CFR Appendix A, General Design Criteria for Nuclear Power Plants.

U.S.NRC
United States Nuclear Regulatory Commission
Protecting People and the Environment

196

W used the results of these analyses in the DCD to show the conformance of the AP1000 advanced passive plant design with General Design Criterion (GDC) 10, “Reactor Design,” for fuel design limits, GDC 15, “Reactor Coolant System Design,” for the reactor coolant pressure boundary (RCPB) pressure limits, and the requirements of Title 10, Section 50.46, of the Code of Federal Regulations (10 CFR 50.46) for the performance of the emergency core cooling system (ECCS).

Applicable GDC 2, Design Bases for Protection Against Natural Phenomena, GDC 4, Environmental and Dynamic Effects Design Bases, GDC 5,Sharing of Structures, Systems, and Components ,GDC10,Reactor Design ,GDC13, Instrumentation and Control , GDC15,Reactor Coolant System Design, GDC 17,Electric Power Systems, GDC 19, Control Room, GDC 20 Protection System Functions, GDC 25, Protection System Requirements for Reactivity Control Malfunctions, GDC 26, Reactivity Control System Redundancy and Capability , GDC 27, Combined Reactivity Control Systems Capability , GDC 28,Reactivity Limits , GDC 29, Protection Against Anticipated Operational Occurrences, GDC 31, Fracture Prevention of Reactor Coolant Pressure Boundary, GDC 34, Residual Heat Removal , GDC 35, Emergency Core Cooling , GDC 55, Reactor Coolant Pressure Boundary Penetrating Containment, GDC 60, Control of Releases of Radioactive Materials to the Environment, GDC 61,Fuel Storage and Handling and Radioactivity Control.

The following GDC from Appendix A to 10 CFR Part 50 are relevant to SRP Section 15:

1. GDC 2, as it relates to the seismic design of structures, systems, and components (SSCs) whose failure could cause an unacceptable reduction in the capability of the residual heat removal system.
2. GDC 4, as it relates to the requirement that SSCs important to safety be designed to accommodate the effects of and be compatible with the environmental conditions associated with normal operation, maintenance, testing, and postulated accident conditions, including such effects as pipe whip and jet impingement.
3. GDC 5, as it relates to the requirement that any sharing among nuclear power units of SSCs important to safety will not significantly impair their safety function.
4. GDC 10, as it relates to the RCS being designed with appropriate margin to ensure that specified acceptable fuel design limits are not exceeded during normal operations including AOOs.
5. GDC 13, as it relates to instrumentation and controls provided to monitor variables over anticipated ranges for normal operations, for AOOs, and for accident conditions.
6. GDC 15, as it relates to the RCS and its associated auxiliaries being designed with appropriate margin to ensure that the pressure boundary will not be breached during normal operations, including AOOs.
7. GDC 17, as it relates to the requirement that an onsite and offsite electric power system be provided to permit the functioning of SSCs important to safety. The safety function for each system (assuming the other system is not working) shall be to provide sufficient capacity and capability to ensure that the acceptable fuel design limits and the design conditions of the reactor coolant pressure boundary are not exceeded during an AOO and that core cooling, containment integrity, and other vital functions are maintained in the event of an accident.
8. GDC 19, as it relates to the requirement that a control room be provided from which personnel can operate the nuclear power unit during both normal operating and accident conditions, including a LOCA.
9. GDC 20, as it relates to the reactor protection system being designed to initiate automatically the operation of appropriate systems, including the reactivity control systems, to ensure that the plant does not exceed specified acceptable fuel design limits during any condition of normal operation, including AOOs.
10. GDC 25, as it relates to the requirement that the reactor protection system be designed to ensure that specified acceptable fuel design limits are not exceeded for any single malfunction of the reactivity control system, such as accidental withdrawal of control rods.
11. GDC 26, as it relates to the reliable control of reactivity changes to ensure that specified acceptable fuel design limits are not exceeded even during AOOs. This is accomplished by ensuring that Westinghouse has allowed an appropriate margin for malfunctions such as stuck rods.
12. GDC 27 and 28, as they relate to the RCS being designed with an appropriate margin to ensure that acceptable fuel design limits are not exceeded and that the capability to cool the core is maintained.
13. GDC 29, as it relates to the design of the protection and reactivity control systems and their performance (i.e., to accomplish their intended safety functions) during AOOs.
14. GDC 31, as it relates to the RCS being designed with sufficient margin to ensure that the boundary behaves in a nonbrittle manner and that the probability of propagating fracture is minimized.
15. GDC 34, as it relates to the capability to transfer decay heat and other residual heat from the reactor so that fuel and pressure boundary design limits are not exceeded.
16. GDC 35, as it relates to the RCS and associated auxiliaries being designed to provide abundant emergency core cooling.
17. GDC 55, as it relates to the isolation requirements of small-diameter lines connected to the primary system.
18. GDC 60, as it relates to the radioactive waste management systems being designed to control releases of radioactive materials to the environment.
19. GDC 61, as it relates to the requirement that the fuel storage and handling, radioactive waste, and other systems that may contain radioactivity be designed to ensure adequate safety under normal and postulated accident conditions.

Transient and Accident Analysis Guidance

- RG 1.206, Combined License Applications for Nuclear Power Plants, 6/2007.
- RG 1.53, in the application of the single-failure criterion, 11/2003.
- RG 1.157, Best-Estimate Calculations of Emergency Core Cooling System Performance, 5/1989.
- NUREG-0800, Standard Review Plan for the Review of Safety Analysis Reports for Nuclear Power Plants.

U.S.NRC
United States Nuclear Regulatory Commission
Protecting People and the Environment

197

Note that RG 1.206 was issued after submittal of AP1000 DCD. Never the less, for new reviewers it provides useful information.

Note that RG 1.53 was originally issued in 1973, and updated 20 years later. The design of safety-related systems (including protection systems) is consistent with IEEE Standard 379-2000.

The staff of the U.S. Nuclear Regulatory Commission (NRC) has reviewed the AP1000 transient and accident analyses in the DCD, in accordance with Chapter 15, “Accident Analysis,” of NUREG-0800, which defines the agency’s Standard Review Plan (SRP).

Transient and Accident Analysis Non-Safety-Related Systems Assumed in the Analysis

- Non-safety-related systems or components are assumed to be operational in the following situations:
  - (a) when assumption of a non-safety-related system results in a more limiting transient.
  - (b) when a detectable and nonconsequential random, independent failure must occur in order to disable the system.
  - (c) when non-safety-related components are used as backup protection For the AP1000 design, Westinghouse applied, as indicated in DCD Tier 2, Chapter 15, the same approach as in the AP600 design, for nonsafety-related systems or components to be used for the analyses of the design-basis events.
- RTNSS will be discussed in more detail next week.

U.S.NRC
United States Nuclear Regulatory Commission
Protecting People and the Environment

198

Westinghouse credited the following non-safety related components as backup protection in the design-basis analysis for the AP1000 design:

- the main feedwater pump trip in the analysis of an increased feedwater flow event.
- the pressurizer heater block in the analysis of loss of normal feedwater (LONF), and inadvertent operation of core makeup tanks (CMTs), chemical and volume control system (CVCS) malfunction that increases reactor coolant inventory, steam generator tube rupture (SGTR), and small-break loss-of-coolant accidents (SBLOCA).
- main steam isolation valve (MSIV) backup valves (including the turbine stop, control valves, turbine bypass valves, moisture separator reheat steam supply control valve, and main steam branch isolation valves in the analysis of inadvertent opening of SG safety valves, steamline break (SLB), and SGTR events.

Transient and Accident Analysis
Loss of Offsite Power Assumptions

- Analysis assumes a loss of offsite power (LOOP).
- The LOOP is not considered as a single failure. The assumption of the LOOP complies with the requirements of GDC 17, "Electric Power Systems." In the analysis, a LOOP is considered a consequence of an event as a result of disruption of the grid following a turbine trip during the event.
- In the case of events involving a turbine trip, Westinghouse assumed that a LOOP and the resulting coastdown of the reactor coolant pumps (RCPs) occurs 3 seconds after the turbine trip.
- Combined license (COL) applicant interfaces support the 3-second assumption.

U.S.NRC
United States Nuclear Regulatory Commission
Protecting People and the Environment

199

In the case of events involving a turbine trip, Westinghouse assumed that a LOOP and the resulting coastdown of the reactor coolant pumps (RCPs) occurs 3 seconds after the turbine trip. DCD Tier 2, Section 8.2, provides the basis for the 3-second delay. That section describes the electrical design features of the AP1000, the electrical system response to a turbine trip, and the combined license (COL) applicant interfaces that support the 3-second assumption.

COL applicants need to consider delay in design and configuration of switchyard. Interface with Chapter 8, power systems, reviewers needed.

Transient and Accident Analysis Analytic Methods

- Twinkle
- VIPRE-01
- COAST
- FACTRAN
- LOFTRAN and LOFTTR2
- NOTRUMP
- WCOBRA/TRAC-LBLOCA
- WCOBRA/TRAC-LTC and WGOTHIC

U.S.NRC
United States Nuclear Regulatory Commission
Protecting People and the Environment

200

Previously approved codes familiar to the staff. Will be discussed more in testing and codes module later this week.

TWINKLE—This multidimensional spatial neutronics code uses an implicit finite-difference method to solve the two-group transient neutronics equations in one, two, and three dimensions.

VIPRE-01— NRC has approved this code for the core thermal-hydraulic (T-H) analyses, determining coolant density, mass velocity, enthalpy, vapor void, static pressure, and the DNBR distribution along parallel flow channels within the reactor core under normal operational and transient conditions.

COAST— NRC has approved this code for use in calculating the reactor coolant flow coast transient for any combination of active and inactive RCPs and forward and reverse flow in the hot- or cold-legs.

FACTRAN—The NRC has approved the FACTRAN code for calculations of the transient heat flux at the surface of a rod.

LOFTRAN—The NRC previously approved this code to allow Westinghouse to analyze system responses to non-LOCA events for conventional Westinghouse PWRs. LOFTRAN simulates a multiloop system using a model containing a reactor vessel (RV), hot- and cold-leg piping, SGs, and a pressurizer. When Westinghouse applied the LOFTRAN code to the AP600 safety analysis, it modified the code to incorporate features representative of the AP600 design which are important to modeling the non-LOCA transient analyses.

NOTRUMP—The NRC previously approved the NOTRUMP code for the SBLOCA analysis.

WCOBRA/TRAC-LBLOCA - NRC has approved this best estimate (BE) code for large-break loss-of-coolant accident (LBLOCA) analysis.

WCOBRA/TRAC-LTC and WGOTHIC—WCOBRA/TRAC is also used for the post-LOCA long-term cooling (LTC) analyses. The WGOTHIC code is used to calculate containment boundary conditions for LBLOCA and post-LOCA LTC. The staff previously reviewed and accepted the application of WCOBRA/TRAC and WGOTHIC for LTC calculations, as discussed in SER Chapter 21.

Transient and Accident Analysis Accident Classification

- Anticipated Operational Occurrence and Accidents.
- ANSI 18.2
  - Condition I: Normal operation and operational transients.
  - Condition II: Faults of moderate frequency.
  - Condition III: Infrequent faults.
  - Condition IV: Limiting faults.

U.S.NRC
United States Nuclear Regulatory Commission
Protecting People and the Environment

201

Long standing practice that Westinghouse uses ANSI 18.2 categorization, while staff uses anticipated operational occurrence and accident.

The following faults are included in category II:

- Feedwater system malfunctions that result in a decrease in feedwater temperature (see DCD subsection 15.1.1).
- Feedwater system malfunctions that result in an increase in feedwater flow (see DCD subsection 15.1.2).
- Excessive increase in secondary steam flow (see DCD subsection 15.1.3).
- Inadvertent opening of a steam generator relief or safety valve (see DCD subsection DCD 15.1.4).
- Inadvertent operation of the passive residual heat removal heat exchanger (see DCD subsection DCD 15.1.6).
- Loss of external electrical load (see DCD subsection DCD 15.2.2).
- Turbine trip (see DCD subsection DCD 15.2.3).
- Inadvertent closure of main steam isolation valves (see DCD subsection 15.2.4).
- Loss of condenser vacuum and other events resulting in turbine trip (see DCD subsection 15.2.5).
- Loss of ac power to the station auxiliaries (see DCD subsection 15.2.6).
- Loss of normal feedwater flow (see DCD subsection 15.2.7).
- Partial loss of forced reactor coolant flow (see DCD subsection 15.3.1).
- Uncontrolled RCCA bank withdrawal from a subcritical or low-power startup condition (see DCD subsection 15.4.1).
- Uncontrolled RCCA bank withdrawal at power (see DCD subsection 15.4.2).
- RCCA misalignment (dropped full-length assembly, dropped full-length assembly bank, or statically misaligned assembly) (see DCD subsection 15.4.3).
- Startup of an inactive reactor coolant pump at an incorrect temperature (see DCD subsection 15.4.4).
- Chemical and volume control system malfunction that results in a decrease in the boron concentration in the reactor coolant (see DCD subsection 15.4.6).
- Inadvertent operation of the passive core cooling system during power operation (see DCD subsection 15.5.1).
- Chemical and volume control system malfunction that increased reactor coolant inventory (see DCD subsection 15.5.2).
- Inadvertent opening of a pressurizer safety valve (see DCD subsection 15.6.1).
- Break in instrument line or other lines from the reactor coolant pressure boundary that penetrate containment (see DCD subsection 15.6.2).

15.0.1.3 Condition III: Infrequent Faults

Condition III events are faults that may occur infrequently during the life of the plant. They may result in the failure of only a small fraction of the fuel rods. The release of radioactivity is not sufficient to interrupt or restrict public use of those areas beyond the exclusion area boundary, in accordance with the guidelines of 10 CFR 100. By definition, a Condition III event alone does not generate a Condition IV event or result in a consequential loss of function of the reactor coolant system or containment barriers. The following faults are included in this category:

- Steam system piping failure (minor) (see DCD subsection 15.1.5).
- Complete loss of forced reactor coolant flow (see DCD subsection 15.3.2).
- RCCA misalignment (single RCCA withdrawal at full power) (see DCD subsection 15.4.3).
- Inadvertent loading and operation of a fuel assembly in an improper position (see DCD subsection 15.4.7).
- Inadvertent operation of automatic depressurization system (see DCD subsection 15.6.1).
- Loss-of-coolant accidents (LOCAs) resulting from a spectrum of postulated piping breaks within the reactor coolant pressure boundary (small break) (see DCD subsection 15.6.5).
- Gas waste management system leak or failure (see DCD subsection 15.7.1).
- Liquid waste management system leak or failure (see DCD subsection 15.7.2).
- Release of radioactivity to the environment due to a liquid tank failure (see DCD subsection 15.7.3).
- Spent fuel cask drop accidents (see DCD subsection 15.7.5).

15.0.1.4 Condition IV: Limiting Faults

Condition IV events are faults that are not expected to take place, but are postulated because their consequences include the potential of the release of significant amounts of radioactive material. They are the faults that must be designed against, and they represent limiting design cases. Condition IV faults are not to cause a fission product release to the environment resulting in doses in excess of the guideline values of 10 CFR 100. A single Condition IV event is not to cause a consequential loss of required functions of systems needed to cope with the fault, including those of the emergency core cooling system and the containment. The following faults are classified in this category:

- Steam system piping failure (major) (see DCD subsection 15.1.5).
- Feedwater system pipe break (see DCD subsection 15.2.8).
- Reactor coolant pump shaft seizure (locked rotor) (see DCD subsection 15.3.3).
- Reactor coolant pump shaft break (see DCD subsection 15.3.4).
- Spectrum of RCCA ejection accidents (see DCD subsection 15.4.8).
- Steam generator tube rupture (see DCD subsection 15.6.3).
- LOCAs resulting from a spectrum of postulated piping breaks within the reactor coolant pressure boundary (large break) (see DCD subsection 15.6.5).
- Design basis fuel handling accidents (see DCD subsection 15.7.4).

Transient and Accident Analysis
Passive Features

- Two CMTs are designed to inject passively at high reactor pressure into the direct injection line (DVI).
- The ADS consists of four stages of depressurization valves.
- The N2 pressurized accumulators (about 700 psia) provide borated water to the reactor coolant system in the event of a LOCA.
- Once the reactor coolant system depressurizes, injection from the IRWST and recirculation sump maintains long-term core cooling.
- The passive residual heat removal (PRHR) heat exchanger provides a passive method for decay heat removal. The heat exchanger is a C-tube type, located inside the in-containment refueling water storage tank (IRWST).

U.S.NRC
United States Nuclear Regulatory Commission
Protecting People and the Environment

202

The two CMTs are designed to inject passively at high reactor pressure into the direct injection line (DVI). The pressure is provided to the top of the tank through a pipe line running from the hot leg. As a transient progress, the pressure differential between the hot leg and the DVI line drive the water from the CMT through the DVI line into the reactor downcomer. The flow from the DVI line into the CMT is prevented by a check valve.

The ADS consists of four stages of depressurization valves, which are interlocked such that Stage 1 is initiated first, with subsequent stages actuated only after previous stages have been actuated. The AP1000 design prohibits opening of the fourth stage valves while the RCS is at nominal operating pressure. ADS Stage 1-3 discharged from top of pressurizer and Stage 4 discharges from the hot leg. The automatic depressurization valves are designed to automatically open when actuated and to remain open for the duration of an automatic depressurization event. Valve stages 1 and 4 actuate at discrete core makeup tank levels, as either tank's level decreases during injection or from spilling out a broken injection line. Valve stages 2 and 3 actuate based upon a timed delay after actuation of the preceding stage. This opening sequence provides a controlled depressurization of the reactor coolant system. The valve opening sequence prevents simultaneous opening of more than one stage, to allow the valves to sequentially open. The valve actuation logic is based on two-of-four level detectors, in either core makeup tank for automatic depressurization system stages 1 and 4.

The N2 pressurized accumulators (about 700 psia) provide additional borated water to the reactor coolant system in the event of a LOCA. Nominally, these 2000-ft3 tanks are filled with 1700 ft3 of water and 300 ft3 of nitrogen at an initial pressure of 700 psig. Once sufficient reactor coolant system depressurization occurs, either as a result of a LOCA or the actuation of the ADS, accumulator injection begins. The injection is through the direct injection line into the reactor downcomer.

Once the reactor coolant system depressurizes, injection from the IRWST and recirculation sump maintains long-term core cooling. For continued injection from the IRWST and the recirculation sump, the reactor coolant system must remain depressurized.

The passive residual heat removal (PRHR) heat exchanger provides a passive method for decay heat removal. The heat exchanger is a C-tube type, located inside the in-containment refueling water storage tank (IRWST). The heat exchanger is above the reactor coolant system to provide natural circulation of the reactor coolant. Operation of the PRHR heat exchanger is initiated by the opening of one of the two parallel power-operated valves at the PRHR heat exchanger cold leg. The PRHR heat exchanger, in conjunction with the passive containment cooling system, keeps the reactor coolant subcooled indefinitely. After the IRWST water reaches saturation, steam starts to vent to the containment atmosphere. The condensation that collects on the containment steel shell (cooled by the passive containment cooling system) returns to the IRWST, maintaining fluid level for the PRHR heat exchanger heat sink.

Transient and Accident Analysis Significant RAI

- Westinghouse credited the following non-safety-related components as backup protection in the design-basis analysis:
  - the main feedwater pump trip.
  - the pressurizer heater block.
  - main steam isolation valve (MSIV) backup valves.
- Staff asked Westinghouse to address its compliance with 10 CFR 50.36, which specifies the criteria for the systems that are subject to technical specification (TS) limiting conditions for operation (LCOs).
- In response to RAI 440.061, Westinghouse indicated that it complied with the 10 CFR 50.36 requirements by providing TSs to include non-safety-related systems that are credited as backup systems in the licensing design-basis analyses.

U.S.NRC
United States Nuclear Regulatory Commission
Protecting People and the Environment

203

Westinghouse takes credit for non-safety related equipment as backup systems. Relies on safety grade systems for primary protection. The use of these systems was an important element of the staff review. Regulatory treatment of non-safety systems will be discussed in a later module.

Transient and Accident Analysis Review Areas

- Categorization of Transients.
- Analysis Acceptance Criteria.
- Plant Characteristics Considered in Safety Evaluation.
- Assumed Protections and Safety Systems Actions.
- Identification of Causes and Frequency Classification.
- Sequence of Events.

U.S.NRC
United States Nuclear Regulatory Commission
Protecting People and the Environment

204

The staff systematically reviewed these areas, however, approval is coupled to the separate review of each AOO and accident.

Here the staff focuses on the conservatism of initial conditions to the accident analysis, and ensures that only safety grade reactor protection systems are taken credit for in the analysis.

Transient and Accident Analysis

- **15.1.1 Event Categorization**
  - Westinghouse assigned the initiating events to the following categories, in accordance with Chapter 15 of the SRP and Regulatory Guide (RG) 1.70, "Standard Format ad Content of Safety Analysis Reports for Nuclear Plants:"
    - increase in heat removal from the primary system,
    - decrease in heat removal by the secondary system,
    - decrease in reactor coolant system (RCS) flow rate,
    - reactivity and power distribution anomalies,
    - increase in reactor coolant inventory,
    - decrease in reactor coolant inventory,
    - anticipated transients without scram (ATWS).

U.S.NRC
United States Nuclear Regulatory Commission
Protecting People and the Environment

205

The instructor will now discuss each class of events in turn in the following presentation. Note that even though AP1000 is a new passive design, the guidance documents including event classification are still relevant.

Transient and Accident Analysis SER Evaluation Findings

- Event categorization.
- Safety related SSC used in safety evaluation.
- Non-safety-related systems assumed in the safety analysis.
- Loss of Offsite Power Assumptions.
- Analytical Methods.

U.S.NRC
United States Nuclear Regulatory Commission
Protecting People and the Environment

206

The staff formally concludes that the event classification is acceptable. Remember that the event classification and the event acceptance criteria are coupled. AOOs should not result in fuel damage, while accidents may.

Staff formally concludes that the analysis takes proper credit for control systems, and safety and non-safety system functions.

AP1000 Accident Analysis

Module 8
SER Section 15 and 5.4.2

INSTRUCTOR: Jack Rosenthal

October 2008

U.S.NRC
United States Nuclear Regulatory Commission
Protecting People and the Environment

Transient and Accident Analysis Learning Objectives

- Class participants are expected to understand:
  - The events in an AP1000 that cause an increase in heat removal from the primary system.
  - Results of the DCD analyses for these events.
  - SRP acceptance criteria for these events.
  - Passive systems that support the mitigation of these events.
  - SER evaluation findings for these events.

U.S.NRC
United States Nuclear Regulatory Commission
Protecting People and the Environment

208

AP1000 builds on AP600 as well as the current generation of light water reactors.

Decay heat removal system and core makeup tanks are different.

System performance and protection systems at the functional level is similar to earlier generation of plants.

Transient and Accident Analysis 15.2.1 Increase in Heat Removal from the Primary System

- Events
  - Decrease in feedwater temperature.
  - Increase in feedwater flow.
  - Increase in steam flow.
  - Inadvertent opening of a steam generator relief or safety valve.
  - Inadvertent Operation of PRHR.
  - Steam System piping failures inside and outside containment.

U.S.NRC
United States Nuclear Regulatory Commission
Protecting People and the Environment

209

These events replicate lists found in SRP 15, and with the exception of the inadvertent operation of the PRHR, replicate those analyzed at a generation II plant.

Transient and Accident Analysis 15.2.1 Increase in Heat Removal from the Primary System

- **Significant RAI**
  - RAI 440.063: SG high-2 level trip signal will trip feedwater pumps and terminate the excessive feedwater flow. Feedwater pump trip is a non-safety-related system. NRC staff reviewed and approved the use of the feedwater pump trip to terminate the excessive feedwater flow.
  - RAI 440.067: Addresses the NRC staff's concern with the timing of a LOOP on the analysis of the limiting SLB case. Westinghouse analyzed two full-break SLB cases initiated with the reactor at no-load conditions: one with offsite power throughout the event, and one with offsite power loss simultaneous with the SLB. Analysis showed little difference.

U.S.NRC
United States Nuclear Regulatory Commission
Protecting People and the Environment

210

This RAI is illustrative of the level of detail of the NRC review. Issue of credit for non-safety systems is found throughout Chapter 15, as is the issue of analysis with and without offsite power.

Transient and Accident Analysis 15.2.1 Increase in Heat Removal from the Primary System

- DNBR protection provided by neutron power, over-temperature and overpower ΔT trips.
- The transient results show that for AOOs, departure from nucleate boiling (DNB) does not occur at any time.
- The analysis shows that while there is a small return to power during the event DNB does not occur for the steam system piping failure event and fuel failure does not occur during this event classified as an accident.
- RCS pressure is below 110 percent of design pressure.

U.S.NRC
United States Nuclear Regulatory Commission
Protecting People and the Environment

211

Approved codes - Loftran, Factran, VIPRE - 01.

Response of transients similar to generation 2 LWR.

Response to SLB accident more benign than in W gen 2. Explain difference in response between AP1000 and a generation 2, 3 or 4 loop Westinghouse LWR.

Point out importance of CMT.

Transient and Accident Analysis 15.2.1 Increase in Heat Removal from the Primary System

- Inadvertent operation of the passive residual heat removal (PRHR) heat exchanger:
  - Inadvertent actuation of the PRHR heat exchanger could be caused by operator error or a false actuation signal. The actuation of the PRHR heat exchanger causes an injection of relatively cold water into the reactor coolant system.
  - This causes a reactivity insertion in the presence of a negative MTC. The overpower/over-temperature protection functions provide protection. Low cold leg temperature or low pressurizer pressure protection provide backup trip.
  - These protection functions do not terminate operation of the PRHR heat exchanger.
  - The DNBR does not drop below the design limit value.

U.S.NRC
United States Nuclear Regulatory Commission
Protecting People and the Environment

212

Transients and accidents other than PRHR replicate operating reactors.

Inadvertent operation of the passive residual heat removal (PRHR) heat exchanger.
Actuation of the PRHR heat exchanger involves opening one of the isolation valves, which establishes a flow path from one reactor coolant system hot leg, through the PRHR heat exchanger, and back into its associated steam generator cold leg plenum.

The inadvertent actuation of the PRHR heat exchanger causes an injection of relatively cold water into the reactor coolant system. This produces a reactivity insertion in the presence of a negative moderator temperature coefficient. The overpower/overtemperature protection functions (neutron overpower, overtemperature, and overpower ΔT trips) are intended to prevent a power increase which could lead to a DNBR less than the safety analysis limit. In addition the low cold leg temperature or low pressurizer pressure protection functions could generate a reactor trip.

Results:
The inadvertent operation of the PRHR heat exchanger incident is an overpower transient for which the fuel temperature rises. Assuming a reactor trip does not occur, the plant reaches a new equilibrium condition at a higher power level corresponding to the increase in power demanded by the system. In the limiting case analyzed, the plant power stabilizes at about 108 percent of its nominal value. Assuming the rod control system to be in automatic control results in a slightly less limiting transient because the control rods are inserted in response to a primary-to-secondary power mismatch. The DNBR does not drop below the design limit value.
Because the power level rises during the inadvertent PRHR heat exchanger initiation, the fuel temperatures will also rise until after reactor trip. The core heat flux lags behind the neutron flux response because of the fuel rod thermal time constant. The peak fuel temperature remains below the fuel melting temperature.

Transient and Accident Analysis 15.2.1 Increase in Heat Removal from the Primary System

SER Evaluation Findings:

- The staff finds that the assumptions used in the analysis are conservative and, therefore, are acceptable.
- The results of the analysis for the limiting full-power case with and without offsite power available show that the RCS pressure remains below 110 percent of the design pressure, and the minimum DNBR remains above the safety limit DNBR, thus satisfying the acceptance criteria of the SRP for moderate-frequency events.
- Therefore, the staff concludes that the analysis is acceptable.

U.S.NRC
United States Nuclear Regulatory Commission
Protecting People and the Environment

213

The staff finds that the assumptions used in the analysis are conservative for the reasons stated above and, therefore, are acceptable. The results of the analysis for the limiting full-power case with and without offsite power available show that the RCS pressure remains below 110 percent of the design pressure, and the minimum DNBR remains above the safety limit DNBR, thus satisfying the acceptance criteria of the SRP for moderate-frequency events.

Therefore, the staff concludes that the analysis is acceptable.

Transient and Accident Analysis 15.2.2 Decrease in Heat Removal from the Primary System

- Events
  - Loss of external load and turbine trip.
  - Loss of non-emergency AC power to the station auxiliaries.
  - Loss of normal feedwater flow.
  - Feedwater system pipe break inside and outside containment.

U.S.NRC
United States Nuclear Regulatory Commission
Protecting People and the Environment

214

This list corresponds to the standard review plan, NUREG-0800, Chapter 15. The lists are intended to span what could go wrong to ensure protection is provided.

The first 3 events are AOOs. The last event is an accident.

Transient and Accident Analysis 15.2.2 Decrease in Heat Removal from the Primary System

- **Significant RAI**
  - In RAI 440.074, the NRC staff questioned the PRHR heat transfer coefficients during the loss of ac power event. The heat transfer coefficient was based on the same methods in WCAP-12980, Revision 3, "AP600 Passive Heat Removal Heat Exchanger Test Final Report," April 1997, which the NRC previously reviewed and approved, for AP1000.
  - RAI 440.075 questions initial conditions and the availability of offsite power with a loss of normal feedwater. Westinghouse provided sensitivity studies to show the effect on plant response was insignificant.
  - In a follow-up to RAI 440.076, the NRC staff requested Westinghouse to explain the limiting break case for AP1000. Westinghouse provided a break size spectrum study for FLB events. NRC staff noted that the non-safety-related pressurizer spray is credited for heat removal to limit the peak RCS pressure. Credit is taken for the non-safety related pressurizer spray. Regulatory treatment is described in Module 24.

U.S.NRC
United States Nuclear Regulatory Commission
Protecting People and the Environment

215

Loss of ac power
In RAI 440.074, the NRC staff requested Westinghouse to justify the adequacy of the calculated PRHR heat transfer coefficients during the loss of ac power event. Westinghouse's response stated that the determination of the PRHR heat transfer coefficients was based on the same methods discussed in WCAP-12980, Revision 3, "AP600 Passive Heat Removal Heat Exchanger Test Final Report," issued April 1997, which the NRC previously reviewed and approved, for AP1000. Because Westinghouse's analysis shows that the calculated PRHR tube flow and primary temperature fall within the PRHR test range, and the magnitude of the PRHR primary-side heat transfer coefficient during the low-flow conditions of the loss of ac power events does not significantly affect the calculated decay heat removal, peak pressure, and pressurizer water volume, the NRC staff concludes that the PRHR heat transfer coefficient calculated at low-flow conditions is adequate and acceptable for use in the loss of ac power event analysis.

Loss of normal feedwater
In response to RAI 440.075, related to the adequacy of the initial temperature and pressure assumed in the analysis, Westinghouse replied that during the LONF event, the availability of ac power is assumed after reactor trip, and the CVCS makeup pump is assumed to operate resulting in a slightly higher peak pressurizer water level with a lower margin to pressurizer overfilling. A lower initial RCS temperature results in a higher initial RCS mass and, thus, a lower margin to the pressurizer overfilling. In addition, Westinghouse performed a sensitivity study and showed that the effects of the initial RCS temperature and pressurizer pressure on the plant transient behavior are insignificantly small.

In a follow-up to RAI 440.076, the NRC staff requested Westinghouse to discuss the analysis used to determine the limiting break case for the AP1000 design. In its response, Westinghouse provided the results of a break size spectrum study for FLB events. NRC staff notes that the non-safety-related pressurizer spray is credited for heat removal to limit the increase in the peak RCS pressure. In addition, the analysis assumes a low pressurizer safety-valve setpoint. Westinghouse replied that it had reanalyzed the event without pressurizer spray operable and with the pressurizer safety-valve setpoint at its normal value, and that the calculated peak RCS pressure is less than 17.93 MPa (2600 psia). Therefore, the NRC staff concludes that the calculated peak pressure demonstrates that the margin (greater than 1.03 MPa (150 psi)) to the safety limit of 110 percent of the design pressure is sufficient to compensate for the nonconservative assumptions of the pressurizer spray and pressurizer safety-valve models discussed above. Credit is taken for the non-safety related pressurizer spray. Regulatory treatment is discussed next week.

Transient and Accident Analysis 15.2.2 Decrease in Heat Removal from the Primary System

- Pressure-relieving devices incorporated in the primary and secondary systems are adequate to limit the maximum pressures to within the design limits.
- The analyses show that the predicted DNBR is greater than the design limit at any time during the transient.
- The capacity of the PRHR heat exchanger is adequate to remove decay heat, to prevent overpressurizing the reactor coolant system, and to maintain the core cooling capability.

U.S.NRC
United States Nuclear Regulatory Commission
Protecting People and the Environment

216

Approved codes - Loftran, Factran, VIPRE-01 used. The purpose of the analysis is to ensure the adequate sizing to equipment.

Transient and Accident Analysis 15.2.2 Decrease in Heat Removal from the Primary System

- SER Evaluation Findings
  - The results of the analysis show that the calculated minimum DNBR meets the safety DNBR limit, and the long-term PRHR heat removal capacity is sufficient to remove the decay heat.
  - The results show that the peak RCS pressure does not exceed the RCS pressure limit, pressurizer overfilling does not occur, and the integrity of the RCS is maintained.
  - Thus, the SRP acceptance criteria for the loss of ac power are met, and the staff concludes that the analysis is acceptable.
  - The applicant used approved methods, the assumptions used in the analysis are adequate in maximizing RCS pressure and minimizing the calculated DNBRs, the staff concludes that the analysis is acceptable.

U.S.NRC
United States Nuclear Regulatory Commission
Protecting People and the Environment

217

PRHR

The results of the analysis show that the calculated minimum DNBR meets the safety DNBR limit, and the long-term PRHR heat removal capacity is sufficient to remove the decay heat. In addition, the results show that the peak RCS pressure does not exceed the RCS pressure limit, pressurizer overfilling does not occur, and the integrity of the RCS is maintained. Thus, the SRP acceptance criteria for the loss of ac power are met, and the staff concludes that the analysis is acceptable.

Because the applicant used NRC-approved methods, the assumptions used in the analysis are adequate in maximizing RCS pressure and minimizing the calculated DNBRs, and the results of the analysis meet the acceptance criteria of SRP Section 15.2.8 for the FLB break with respect to the pressure and safety DNBR limits, the staff concludes that the analysis is acceptable.

Transient and Accident Analysis 15.2.3 Decrease in Reactor Coolant System Flow Rate

- Events
  - Partial loss of forced reactor coolant flow.
  - Complete loss of forced reactor coolant flow.
  - Reactor coolant pump shaft seizure (locked rotor).
  - Reactor coolant pump shaft break.

U.S.NRC
United States Nuclear Regulatory Commission
Protecting People and the Environment

218

The first event is a Condition II event, the second is a Condition III event, and the last two are Condition IV events. The four limiting flow rate decrease events described above are analyzed in this section. The most severe radiological consequences result from the reactor coolant pump shaft seizure accident discussed in DCD subsection 15.3.3. Doses are reported only for that case.

The analysis of these events showed that technical specifications requirements were met. Acceptance criteria for the SRP is discussed along with the SER findings.

Partial loss of forced reactor coolant flow - rapid increase in the coolant temperature. The pumps continue to operate. Condition II incident.

Protection provided by the low primary coolant flow reactor trip signal.

Complete loss of forced reactor coolant flow - Condition III event (an infrequent fault). The following signals provide protection against this event:

- Reactor coolant pump underspeed.
- Low reactor coolant loop flow.

Reactor coolant pump shaft seizure (locked rotor) – decrease in heat transfer to SG, The rapid expansion of the coolant in the reactor core, combined with reduced heat transfer in the steam generators, causes an insurge into the pressurizer and a pressure increase throughout the reactor coolant system. Condition IV incident (a limiting fault). Primary safety valves limit pressure. The peak reactor coolant system pressure reached during the transient is less than that which causes stresses to exceed the faulted condition stress limits of the ASME Code, Section III. Also, the peak cladding surface temperature is considerably less than 2700°F. The cladding temperature is conservatively calculated, assuming that DNB occurs at the initiation of the transient. A conservative analysis has been performed assuming 10 percent of the rods are damaged. Activity carried over to the secondary side because of primary-to-secondary leakage is available for release to the environment via the steam line safety valves or the power-operated relief valves.

Reactor coolant pump shaft break- bounded by shaft seizure.

Transient and Accident Analysis 15.2.3 Decrease in Reactor Coolant System Flow Rate

- **Significant RAI**
  - In RAI 440.080, staff questioned minimum DNBR. Westinghouse calculated minimum DNBR above the safety-limit DNBR and thus assures no rod failure. For purpose of calculating dose releases, Westinghouse assumed that 16 percent of rods are damaged. The results show that the dose release limits are met.. Staff concluded that Westinghouse used NRC-approved methods with results that show that the peak RCS pressure will remain within 110 percent of the design pressure, and the radiological release will remain within the 10 CFR 50.34(a)(1)(ii)(D)(*1*) limits, and the analysis for the RCP shaft seizure event meets the acceptance criteria of SRP Section 15.3.3 and is acceptable.

U.S.NRC
United States Nuclear Regulatory Commission
Protecting People and the Environment

219

Transient and Accident Analysis 15.2.3 Decrease in Reactor Coolant System Flow Rate

- Pressure remains below 110% design pressure.
- The analyses show that the predicted DNBR during AOOs is greater than the design limit.
- Shaft seizure analysis assumes that 16 percent of rods are damaged. The results show that the dose release limits are met.

U.S.NRC
United States Nuclear Regulatory Commission
Protecting People and the Environment

220

Approved codes - Loftran, Factran, VIPRE-01.

Section 15.3 of the SER discusses the staff's evaluation of the radiological calculations.

Transient and Accident Analysis 15.2.3 Decrease in Reactor Coolant System Flow Rate

- SER Evaluation Findings
  - The peak RCS pressure during the transient will remain below 110 percent of the system design pressure, and the calculated DNBR will remain above the design DNBR safety limit. Thus, the integrity of the RCS pressure boundary is not endangered, no fuel failure is predicted to occur, and core geometry and control rod insertability will be maintained with no loss of core cooling capability. The staff determines that the analysis meets the acceptance criteria of SRP, and it concludes that the analysis is acceptable.
  - For the purpose of calculating dose releases, the applicant conservatively assumed that 16 percent of rods are damaged in the locked rotor event. The results show that the dose release limits are met with the assumed 16 percent of fuel rods damaged. The staff finds that the analysis for the RCP shaft seizure event meets the acceptance criteria of SRP and is acceptable.

U.S.NRC
United States Nuclear Regulatory Commission
Protecting People and the Environment

221

The applicant analyzed the event using NRC-approved methods, and the results of the analysis for the limiting case, the loss of two RCPs, show that, with and without offsite power available, the RCS pressure will remain within 110 percent of the design pressure, and the minimum DNBR will remain above the safety DNBR limit. The staff finds that the results of the analysis meet the acceptance criteria of SRP Section 15.3.1 regarding the limits for the calculated RCS pressure and the minimum DNBR. Therefore, the staff concludes that the analysis is acceptable.

For the case analyzed with a complete loss of flow, the method of analysis and the assumptions made for initial conditions and reactivity coefficients are identical to those for a partial loss of flow, except that the RCP underspeed trip actuates a reactor trip following the loss of power supply to all pumps at power. Section 15.2.3.1 of this report discusses the methods and assumptions used in the analysis. The results of the applicant's analysis show that the peak RCS pressure during the transient will remain below 110 percent of the system design pressure, and the calculated DNBR will remain above the design DNBR safety limit. Thus, the integrity of the RCS pressure boundary is not endangered, no fuel failure is predicted to occur, and core geometry and control rod insertability will be maintained with no loss of core cooling capability. Therefore, the staff determines that the analysis meets the acceptance criteria of SRP Section 15.3.2 with respect to the integrity of the RCS pressure boundary and the fuel rods, and it concludes that the analysis is acceptable.

The results of the analysis show that the maximum RCS pressure remains less than 110 percent of the design pressure. The applicant also indicated, in the response to RAI 440.080, that the calculated minimum DNBR is above the safety-limit DNBR and thus assures no rod failure. However, for the purpose of calculating dose releases, the applicant conservatively assumed that 16 percent of rods are damaged. The results show that the dose release limits are met even with the assumed 16 percent of fuel rods damaged. Section 15.3 of this report discusses the staff's evaluation of the radiological calculations. The applicant used NRC-approved methods with results that show that the peak RCS pressure will remain within 110 percent of the design pressure, and the radiological release will remain within the 10 CFR 50.34(a)(1)(ii)(D)(*1*) limits. Therefore, the staff finds that the analysis for the RCP shaft seizure event meets the acceptance criteria of SRP Section 15.3.3 and is acceptable.

Transient and Accident Analysis 15.2.4 Reactivity and Power Distribution Anomalies

- Events
  - Uncontrolled rod cluster control assembly (RCCA) bank withdrawal from a subcritical or low-power startup condition.
  - Uncontrolled RCCA bank withdrawal at power.
  - RCCA misalignment.
  - Startup of an inactive reactor coolant pump at an incorrect temperature.
  - Chemical and volume control system malfunction that results in a decrease in the boron concentration in the reactor coolant.
  - Inadvertent loading and operation of a fuel assembly in an improper position.
  - Spectrum of RCCA ejection accidents.

U.S.NRC
United States Nuclear Regulatory Commission
Protecting People and the Environment

222

Items 1, 2, 3, 4, 5 are Condition II events. Item 7 is a Condition IV event. Item 6 is a III event.

Items 1, 2, 3, 4, 5, 6 are AOO. Item 7 is an accident.

Transient and Accident Analysis 15.2.4 Reactivity and Power Distribution Anomalies

- **Significant RAI**
  - As indicated in the response to RAI 440.181, Westinghouse generic analysis is predicated on conservative treatment of the experimental fuel data. The staff concluded that, although the SRP Section 15.4.8 fuel enthalpy safety limit may not be conservative, the generic analysis provides reasonable assurance that radiological consequences of the rod ejection accident will not violate the acceptance criteria in SRP Section 15.4.8.

U.S.NRC
United States Nuclear Regulatory Commission
Protecting People and the Environment

223

SRP limit 280 cal/gm.
W internal limit 200 cal/gm.
Calc values typically 100-180 cal/gm.

3 dimension space time kinetic calculations show lower limits.

Transient and Accident Analysis 15.2.4 Reactivity and Power Distribution Anomalies

- The analyses of AOOs show that the predicted DNBR is greater than the design limit.
- Ejected rod accident analysis:
  - calculated values of peak fuel enthalpy below the acceptable limit.
  - the calculated peak RCS pressure does not exceed the RCS emergency limits (Service Level C).
  - assumed 10% fuel rod failure.
  - radiological consequences meet SRP Section 15.4.8 acceptance criteria.

U.S.NRC
United States Nuclear Regulatory Commission
Protecting People and the Environment

224

Approved codes - Twinkle, Loftran, Factran, VIPRE-01.

Conclusions for AOOs
The power range neutron flux instrumentation, overtemperature ΔT and high pressurizer pressure trip functions provide adequate protection over the entire range of possible reactivity insertion rates. The DNB design basis, as defined in Section 4.4, is met for all cases.

Ejected Rod

The analysis credits the high neutron flux trip (high and low setting) to trip the reactor.

The results show that the calculated values of hot spot radially averaged fuel enthalpy for the four analyzed cases are 181 calories per gram (cal/g) for HFP-BOC, 104 cal/g for HZP-BOC, 170 cal/g for HFP-EOC, and 117 cal/g for HZP EOC. These values of peak fuel enthalpy fall below the safety limit of 280 cal/g specified in SRP Section 15.4.8, "Spectrum of Rod Ejection Accidents."

The effect of a LOOP on the calculated minimum DNBR is negligible, because a rapid decrease in the heat flux after the control rod insertion compensates for the decrease in the RCS flow caused by a LOOP, and the minimum DNBR occurs before initiation of a LOOP.

The analysis shows that less than 10 percent of the fuel rods experience DNB as a result of the rod ejection event. For the purpose of calculating dose releases, the applicant conservatively assume that 10 percent of the fuel fails.

Experimental data show failure of high burnup fuels at lower enthalpy values than the fuel enthalpy safety limit specified in SRP Section 15.4.8. However, the staff, the industry, and the international community agree that burnup degradation in the margin to low-enthalpy fuel failure is likely to be regained by application of more detailed three-dimensional (3-D) analysis methods of the fuel response to rod ejection accidents. Detailed 3-D models predict that the value of the peak fuel rod enthalpy would fall below 100 cal/gm (R.O. Meyer, R.K. McCardell, H.M. Chung, D.J. Diamond, and H.H. Scott, "A Regulatory Assessment of Test Data for Reactivity-Initiated Accidents," Nuclear Safety, Volume 37, Number 4, October–December 1996, pages 271–288).

In addition, a generic analysis performed by the Westinghouse that assumes low-enthalpy fuel failure shows that the radiological consequences of rod ejection accidents meet the acceptance criteria specified in Appendix A to SRP Section 15.4.8.

As indicated in the response to RAI 440.181, the applicant's generic analysis is predicated on conservative treatment of the experimental fuel data applied to existing and planned cores operating within approved burnup limits for PWRs. Therefore, the staff concludes that, although the SRP Section 15.4.8 fuel enthalpy safety limit may not be conservative, the generic analysis provides reasonable assurance that radiological consequences of the rod ejection accident will not violate the acceptance criteria in SRP Section 15.4.8 for the AP1000 core operating within the current NRC-approved burnup limits. The staff will not accept further extension of burnup limits until additional experimental information on fuel behavior is available to demonstrate that the fuel cladding will satisfy the regulatory acceptance criteria used in the rod ejection analyses.

Transient and Accident Analysis 15.2.4 Reactivity and Power Distribution Anomalies

- SER Evaluation Findings
  - The applicant performed the analysis using acceptable methods. The results of the analysis show that the calculated values of peak fuel enthalpy fall below the acceptable limit specified in SRP Section 15.4.8, the calculated peak RCS pressure does not exceed the RCS emergency limits (Service Level C), and the radiological consequences meet the SRP Section 15.4.8 acceptance criteria. The staff finds that the analysis meets the acceptance criteria of SRP Section 15.4.8, with respect to the limits of the hot rod average enthalpy, RCS pressure, and radiological consequences. Therefore, the staff concludes that the analysis is acceptable.

U.S.NRC
United States Nuclear Regulatory Commission
Protecting People and the Environment

225

The applicant performed the analysis using acceptable methods. The results of the analysis show that the calculated values of peak fuel enthalpy fall below the acceptable limit specified in SRP Section 15.4.8, the calculated peak RCS pressure does not exceed the RCS emergency limits (Service Level C), and the radiological consequences meet the SRP Section 15.4.8 acceptance criteria. The staff finds that the analysis meets the acceptance criteria of SRP Section 15.4.8, with respect to the limits of the hot rod average enthalpy, RCS pressure, and radiological consequences. Therefore, the staff concludes that the analysis is acceptable.

Transient and Accident Analysis 15.2.5 Increase in Reactor Coolant System Inventory

- Events
  - Inadvertent operation of the core makeup tanks during power operation.
  - Chemical and volume control system malfunction that increases reactor coolant inventory.

U.S.NRC
United States Nuclear Regulatory Commission
Protecting People and the Environment

226

Condition 2 events.

Inadvertent CMT discharge is new to AP600 and AP1000.

Spurious core makeup tank operation at power could be caused by an operator error, a false electrical actuation signal, or a valve malfunction.

Reactor trip on high-3 pressurizer water level reactor trip is expected to occur followed by the PRHR actuation and eventually by an “S” signal, which would then actuate the second core makeup tank. When a consequential loss of offsite power is assumed, this event is more conservative than the spurious “S” signal event.

Transient and Accident Analysis 15.2.5 Increase in Reactor Coolant System Inventory

- **Significant RAI**
  - The staff questioned the CMT initial conditions. In response to RAI 440.085, Westinghouse indicated that high pressure drops through the PRHR loop minimizes the PRHR heat transfer capability. A higher pressure drop limits the PRHR flow and reduces the primary-side heat transfer coefficient. The assumptions using the higher CMT injection flow and a minimum PRHR heat transfer capability result in an increase in the RCS temperature and RCS expansion, thus reducing the margin to pressurizer overfilling.

U.S.NRC
United States Nuclear Regulatory Commission
Protecting People and the Environment

227

Inadvertent Operation of the Core Makeup Tanks during Power Operation

The CMT enthalpies are maximized to minimize the cooling provided by the CMTs. The pressure drop of the CMT injection and balance lines is minimized to maximize the CMT flow injected into the primary system. In response to RAI 440.085, Westinghouse indicated that modeling high pressure drops through the PRHR loop minimizes the PRHR heat transfer capability. A higher pressure drop limits the PRHR flow and reduces the calculated value of the primary-side heat transfer coefficient. In addition, a maximum TS value for PRHR tube plugging and a minimum effective heat transfer area have been assumed. The assumptions using the higher CMT injection flow and a minimum PRHR heat transfer capability result in an increase in the RCS temperature and RCS expansion, thus reducing the margin to pressurizer overfilling.

Transient and Accident Analysis 15.2.5 Increase in Reactor Coolant System Inventory

- Inadvertent operation of the core makeup tanks does not adversely affect the core, reactor coolant system, or steam system.
- The PRHR heat removal capacity is such that reactor coolant water is not relieved from the pressurizer safety valves. DNBR always remains above the design limit values.
- The results of the analysis of chemical and volume control system malfunction does not adversely affect the core, the reactor coolant system, or the steam system. DNBR remains above the design limit values, and RCS and SG pressures remain below 110 percent of design values.

U.S.NRC
United States Nuclear Regulatory Commission
Protecting People and the Environment

228

PRHR

The results of this analysis show that inadvertent operation of the core makeup tanks during power operation does not adversely affect the core, the reactor coolant system, or the steam system. The PRHR heat removal capacity is such that reactor coolant water is not relieved from the pressurizer safety valves. DNBR always remains above the design limit values, and reactor coolant system and steam generator pressures remain below 110 percent of their design values. The results of this analysis show that a chemical and volume control system malfunction does not adversely affect the core, the reactor coolant system, or the steam system. The PRHR heat removal capacity is such that reactor coolant water is not relieved from the pressurizer safety valves. DNBR remains above the design limit values, and reactor coolant system and steam generator pressures remain below 110 percent of their design values.

CVS Injection

If the automatic rod control system and the pressurizer spray systems are assumed to function, no reactor trip signal is expected to occur. Instead, the event is terminated by automatic isolation of the chemical and volume control system on the safety grade high pressurizer level setpoint. If manual rod control is assumed and the pressurizer spray system is assumed to be unavailable, reactor trip may be initiated on either a high pressurizer pressure, low Tcold “S”, or a low steamline pressure “S” signal.

Transient and Accident Analysis 15.2.5 Increase in Reactor Coolant System Inventory

- SER Evaluation Findings
  - The staff finds that the applicant used the LOFTRAN code for the analysis with adequate inputs and appropriately identified the limiting case.
  - The results show that no RCS water is relieved from the pressurizer safety valves. In addition, the calculated minimum DNBR remains above the safety limit values, and the RCS and SG pressures remain below 110 percent of their design pressures. The staff determines that the analysis meets the acceptance criteria of SRP Section 15.5.2 with respect to the pressure limit and core DNBR safety limit. Therefore, the staff concludes that the analysis is acceptable.

U.S.NRC
United States Nuclear Regulatory Commission
Protecting People and the Environment

229

The staff finds that the applicant used the LOFTRAN code for the analysis with adequate inputs and appropriately identified the limiting case, and the results show that no RCS water is relieved from the pressurizer safety valves. In addition, the calculated minimum DNBR remains above the safety limit values, and the RCS and SG pressures remain below 110 percent of their respective design pressures. The staff determines that the analysis meets the acceptance criteria of SRP Section 15.5.2 with respect to the pressure limit and core DNBR safety limit. Therefore, the staff concludes that the analysis is acceptable.

Transient and Accident Analysis 15.2.6 Decrease in Reactor Coolant Inventory

- Events
  - An inadvertent opening of a pressurizer safety valve or inadvertent operation of the automatic depressurization system (ADS).
  - A break in an instrument line or other lines from the reactor coolant pressure boundary that penetrate the containment.
  - Steam Generator Tube Rupture.
  - Loss-of-Coolant Accident resulting from a spectrum of postulated piping breaks within the reactor coolant pressure boundary.
  - Post-LOCA Long-Term Cooling.

U.S.NRC
United States Nuclear Regulatory Commission
Protecting People and the Environment

230

Inadvertent safety valve actuation:

- Overtemperature ΔT,
- Pressurizer low pressure.

Small line break Source Term.

The only significant radionuclide releases are the iodines and the noble gases. The analysis assumes that the reactor coolant iodine is at the maximum Technical Specification level for continuous operation. In addition, it is assumed that an iodine spike occurs at the time of the accident. The reactor coolant noble gas activities are assumed to be those associated with the design basis fuel defect level.

Transient and Accident Analysis
15.2.6.5 Loss of Coolant Accident

- Following pipe break CMT inject.
- ADS actuates in stages.
- Accumulators inject at 700 psia.
- Injection from IRWST and recirculation sump provides long term cooling.
- PRHR provides decay heat removal.

U.S.NRC
United States Nuclear Regulatory Commission
Protecting People and the Environment

231

The two CMTs are designed to inject passively at high reactor pressure into the direct injection line (DVI). The pressure is provided to the top of the tank through a pipe line running from the hot leg. As a transient progress, the pressure differential between the hot leg and the DVI line drive the water from the CMT through the DVI line into the reactor downcomer. The flow from the DVI line into the CMT is prevented by a check valve. The ADS consists of four stages of depressurization valves, which are interlocked such that Stage 1 is initiated first, with subsequent stages actuated only after previous stages have been actuated. The AP1000 design prohibits opening of the fourth stage valves while the RCS is at nominal operating pressure. ADS Stage 1-3 discharged from top of pressurizer and Stage 4 discharges from the hot leg. The automatic depressurization valves are designed to automatically open when actuated and to remain open for the duration of an automatic depressurization event. Valve stages 1 and 4 actuate at discrete core makeup tank levels, as either tank's level decreases during injection or from spilling out a broken injection line. Valve stages 2 and 3 actuate based upon a timed delay after actuation of the preceding stage. This opening sequence provides a controlled depressurization of the reactor coolant system. The valve opening sequence prevents simultaneous opening of more than one stage, to allow the valves to sequentially open. The valve actuation logic is based on two-of-four level detectors, in either core makeup tank for automatic depressurization system stages 1 and 4.The N2 pressurized accumulators (about 700 psia) provide additional borated water to the reactor coolant system in the event of a LOCA. Nominally, these 2000-ft3 tanks are filled with 1700 ft3 of water and 300 ft3 of nitrogen at an initial pressure of 700 psig. Once sufficient reactor coolant system depressurization occurs, either as a result of a LOCA or the actuation of the ADS, accumulator injection begins. The injection is through the direct injection line into the reactor downcomer. Once the reactor coolant system depressurizes, injection from the IRWST and recirculation sump maintains long-term core cooling. For continued injection from the IRWST and the recirculation sump, the reactor coolant system must remain depressurized. The passive residual heat removal (PRHR) heat exchanger provides a passive method for decay heat removal. The heat exchanger is a C-tube type, located inside the in-containment refueling water storage tank (IRWST). The heat exchanger is above the reactor coolant system to provide natural circulation of the reactor coolant. Operation of the PRHR heat exchanger is initiated by the opening of one of the two parallel power-operated valves at the PRHR heat exchanger cold leg. The PRHR heat exchanger, in conjunction with the passive containment cooling system, keeps the reactor coolant subcooled indefinitely. After the IRWST water reaches saturation, steam starts to vent to the containment atmosphere. The condensation that collects on the containment steel shell (cooled by the passive containment cooling system) returns to the IRWST, maintaining fluid level for the PRHR heat exchanger heat sink.

During an SBLOCA, the AP1000 reactor system will depressurize to the pressurizer low pressure setpoint, initiating a reactor trip signal. With further reduction in reactor system pressure, the pressurizer low-pressure setpoint will be reached to actuate an “S” signal. The “S” signal causes the opening of valves in the discharge of the CMTs and PRHR. The CMTs will immediately begin to circulate borated water into the RV downcomer by way of the direct vessel injection (DVI) line. Water will also begin to circulate through the PRHR HX to ensure decay heat removal. As the reactor system drains, the CMTs provide a source of water to replenish that lost out of the break. The “S” signal will also trip the RCPs, which will retain water in the lower elevations of the reactor system and around the core and will minimize the loss of water from the break.

As the CMTs drain, signals are sent to the ADS valves to open in a prescribed sequence. The first three stages of ADS, which are located at the top of the pressurizer, will begin to sequence open when the CMT water volume drops to 67.5 percent. The ADS Stage 4 valve (ADS-4) begins its open sequence when the CMT water volume drops to 20 percent.

The action of the break, PRHR, and ADS-1, 2, and 3 causes the reactor pressure to decrease.

When the pressure reaches approximately 4.83 MPa (700 psig), the accumulator tanks, which contain borated water pressurized with nitrogen, will inject into the RV by way of the DVI lines. Following actuation of the ADS-4, the reactor system pressure will approach that of the containment, permitting borated water from the IRWST to flow by gravity into DVI lines and into the RV.

The SBLOCA analyses performed analyses using the NOTRUMP computer code for the period immediately after the break occurs until IRWST flow is fully established to the reactor core. After this time, the reactor is considered to be in LTC.

Transient and Accident Analysis 15.2.6.5 Loss of Coolant Accident

- The double-ended severance of a DVI line represents a limiting sequence for SBLOCA analysis.
- Staff concludes:
  - The primary side can be depressurized by the ADS to allow stable injection into the core.
  - Injection from the CMTs, accumulators, and IRWST prevents excessive cladding heatup for small-break LOCAs.
  - The peak heat flux during the accumulator injection is below the predicted critical heat flux.
  - The effect of increasing upper plenum/hot leg entrainment does not significantly affect plant safety margins.
  - The analyses performed demonstrate that the 10 CFR 50.46 Acceptance Criteria are met.

U.S.NRC
United States Nuclear Regulatory Commission
Protecting People and the Environment

232

The double-ended severance of a DVI line represents a limiting sequence for SBLOCA analysis, because the water from one of the two accumulators, one of the two CMTs, and one of the two IRWST injection lines would not reach the RV, but would spill into the containment. The LBLOCA analyses were performed using the WCOBRA/TRAC code as documented in WCAP-12945. WCOBRA/TRAC is the Westinghouse's BE T-H computer code used to calculate T-H conditions in the reactor system during blowdown and reflood of a postulated LBLOCA. This code consists of the BE features needed to satisfy the requirements of 10 CFR 50.46(a)(1)(i) for a realistic code.

Conclusions for small break LOCAs

- The primary side can be depressurized by the ADS to allow stable injection into the core.
- Injection from the core makeup tanks, accumulators, and IRWST prevents excessive cladding heatup for small-break LOCAs analyzed, including double-ended ruptures in the passive safeguards system lines. The peak AP1000 heat flux during the accumulator injection period is below the predicted critical heat flux.
- The effect of increasing upper plenum/hot leg entrainment does not significantly affect plant safety margins. The analyses performed demonstrate that the 10 CFR 50.46 Acceptance Criteria are met.

Transient and Accident Analysis 15.2.6.5 Loss of Coolant Accident

- Large break LOCA analysis performed best-estimate WCOBRA/TRAC.
- Statistical sampling to calculate 95th percentile PCT.
- The results of the analysis show that the double-ended cold leg guillotine break results in a maximum PCT and is the limiting case.
- Staff determined analysis conservative.

U.S.NRC
United States Nuclear Regulatory Commission
Protecting People and the Environment

233

LBLOCA analyses
Westinghouse used the WCOBRA/TRAC models to perform the LBLOCA analyses with calculated PCT uncertainties derived from the effects of model-related parameters, while the initial condition-related parameters used in the analyses are bounding and conservative. Westinghouse addressed the limitations in WCOBRA/TRAC relating to the PCT for values greater than 940°C (1725°F). NRC staff review of the sensitivity calculations required by the code limitation indicates that the results reinforce the conservatism of the calculation.

The applicant performed the LBLOCA analyses using the WCOBRA/TRAC code as documented in WCAP-12945. WCOBRA/TRAC is the Westinghouse's BE T-H computer code used to calculate T-H conditions in the reactor system during blowdown and reflood of a postulated LBLOCA. This code consists of the BE features needed to satisfy the requirements of 10 CFR 50.46(a)(1)(i) for a realistic code.

In addition, the applicant used WCOBRA/TRAC to analyze the post-LOCA LTC of the AP1000, including decay heat assumptions from 10 CFR Part 50, Appendix K. Section 15.2.7 of this report discusses the staff's evaluation and conclusions for the LTC.

The applicant used the WCOBRA/TRAC code to perform the LBLOCA analysis. DCD Tier 2, Table 15.6.5-4, lists the initial plant physical configuration, power-related parameters, initial fluid conditions, and RCS boundary conditions used to determine the most limiting break size.

These initial conditions are determined from the applicant's sensitivity study of the worst-case set of combinations that result in the highest limiting calculated PCT. To determine the limiting break case, the applicant performed parametric studies for the PCT with respect to bounding initial conditions and associated uncertainties using the methods described in WCAP-14171, to calculate the 95th percentile PCT. The results of the analysis show that the double-ended coldleg guillotine break results in a maximum PCT and is the limiting case. In all cases analyzed, the bounding core design values of Fq = 2.60 and FdH = 1.65 are applied to the hot rod, at 102 percent of nominal core power. Finally, it was noted that the search for the limiting LBLOCA included the hot-leg break and the cold-leg limiting split break.

The applicant considered the plant systems and equipment that are available to mitigate the effects of the accident, as discussed in its response to RAI 440.097, Revision 1, and identified the limiting single failure as a failure of one CMT discharge valve to open. In modeling the CMTs and accumulators, the applicant minimized the capability to add borated water by assuming the failure of one CMT discharge valve to reflect the limiting single failure.

The applicant presented the results of the LBLOCA analyses in DCD Tier 2, Tables 15.6.5-5 through 15.6.5-8, and Figures 15.6.5.4A-1 through 15.6.5.4A-12. The applicant submitted additional information in its response to RAI 440.097, Revision 1, Table 15.6.5-8, and Revision 1 response to RAI 440.097, Figures 440.097R1-1 through 440.097R1-3. Following an LBLOCA, the reactor trip actuates on a low-pressurizer pressure trip signal. The LBLOCA analysis does not credit the insertion of the control rods. Within a few seconds after the initiation of an LBLOCA, an "S" signal actuates on the containment high-2 pressure. As a result, after appropriate delays, the PRHR and CMT isolation valves open, and containment isolation occurs. The rapid depressurization of the RCS during an LBLOCA leads to the initiation of accumulator injection early in the transient. The accumulator flow reduces CMT delivery to the degree that the CMT level does not reach the ADS Stage 1 valve actuation setpoint until after the accumulator tank empties, following completion of the blowdown phase.

The applicant's calculations continue until the fuel rods are quenched.

The applicant used the WCOBRA/TRAC models to perform the LBLOCA analyses with calculated PCT uncertainties derived from the effects of model-related parameters, while the initial condition-related parameters used in the analyses are bounding and conservative.

The applicant addressed the limitations in WCOBRA/TRAC relating to the PCT for values greater than 940°C (1725°F). Staff review of the sensitivity calculations required by the code limitation indicates that the results reinforce the conservatism of the calculation.

Transient and Accident Analysis 15.2.6.5 Loss of Coolant Accident

- **SRP Acceptance Criteria**
  - The calculated peak cladding temperature (PCT) is less than 1204°C (2200°F).
  - The calculated total oxidation of the cladding is within 0.17 times the total cladding thickness before oxidation.
  - The calculated total amount of hydrogen generated is less than 0.01 times the hypothetical amount that can be generated if all of the metal in the cladding cylinders surrounding the fuel, excluding the cladding surrounding the plenum volume, reacts.
  - Any calculated changes in core geometry will be such that the core remains amenable to cooling.
  - After any calculated successful initial operation of the ECCS, the calculated core temperature will be maintained at an acceptably low value, and decay heat will be removed for the extended time required by the long-lived radioactivity remaining in the core.

U.S.NRC
United States Nuclear Regulatory Commission
Protecting People and the Environment

234

The DCD's LOCA analyses meet the following acceptance criteria for the calculated ECCS performance:

- The calculated peak cladding temperature (PCT) is less than 1204°C (2200°F).
- The calculated total oxidation of the cladding is within 0.17 times the total cladding thickness before oxidation.
- The calculated total amount of hydrogen generated is less than 0.01 times the hypothetical amount that can be generated if all of the metal in the cladding cylinders surrounding the fuel, excluding the cladding surrounding the plenum volume, reacts.
- Any calculated changes in core geometry will be such that the core remains amenable to cooling.
- After any calculated successful initial operation of the ECCS, the calculated core temperature will be maintained at an acceptably low value, and decay heat will be removed for the extended time required by the long-lived radioactivity remaining in the core.

Transient and Accident Analysis 15.2.6.5 Loss of Coolant Accident

- SER Evaluation Findings
  - Pressure boundaries are acceptable and meet the requirements of 10 CFR 50.46 and Appendix K to 10 CFR Part 50, and that the calculated SBLOCA does not result in uncovering the core.
  - Independent analysis.
  - The staff concludes that the applicant's analyses for a spectrum of small piping breaks in the reactor performance of the passive ECCS following a postulated SBLOCA is acceptable.

U.S.NRC
United States Nuclear Regulatory Commission
Protecting People and the Environment

235

The AP1000 is designed to keep the reactor core cooled and covered with water by means of passive safety systems which do not require the start and operation of pumps to provide makeup water. No operator action is required to actuate and control the passive protective systems.

In DCD Tier 2, Section 15.6.5.4B.2, "Small-Break LOCA Analysis Methodology," the applicant described the three elements of the AP1000 SBLOCA evaluation model as the NOTRUMP computer code, the NOTRUMP homogeneous sensitivity model, and the CHF assessment during accumulator injection. As described in the following discussion, the applicant applied the three elements in the analyses for the AP1000 design. The results demonstrate that the design of the AP1000 adequately mitigates the consequences of postulated design-basis SBLOCA events. Section 21.6.2 of this report discusses the staff's evaluation and acceptance of the NOTRUMP code and the SBLOCA evaluation model for the AP1000.

The staff has reservations on the ability of the NOTRUMP code to conservatively predict liquid entrainment within the upper plenum, hot-legs, and ADS-4 valves. If too little liquid entrainment were assumed, this liquid would be available to flow back into the core and provide unrealistic core cooling, and depressurization of the reactor system by the ADS-4 would be artificially enhanced. Both these effects would not be conservative for safety analysis. Westinghouse addressed this concern by performing an analysis for the double-ended DVI line break in which all liquid leaving the core was set at the same velocity as that of the steam (homogeneous flow). Using the homogeneous flow assumption, all liquid which reached the upper plenum would be swept out toward the ADS-4. The homogeneous analysis did not predict significant core uncovery. However, it predicted a lower minimum core water mass, compared to the nonhomogeneous case. The homogeneous analysis for a postulated double-ended DVI line break is part of the small break evaluation model for the AP1000 design.

Based on the foregoing considerations, the staff concludes that the applicant's analyses for a spectrum of small piping breaks in the reactor pressure boundary are acceptable and meet the requirements of 10 CFR 50.46 and Appendix K to 10 CFR Part 50, and that the calculated performance of the passive ECCS following a postulated SBLOCA is acceptable.

Transient and Accident Analysis 15.2.6.5 Loss of Coolant Accident

- SER Evaluation Findings
  - The calculated results of the AP1000 LBLOCA satisfy the requirements of 10 CFR 50.46 and, therefore, are acceptable.
  - Westinghouse Best-Estimate Thermal-Hydraulic codes satisfy 10CFR 50.46(a)(1)(i) for a realistic code.

U.S.NRC
United States Nuclear Regulatory Commission
Protecting People and the Environment

Transient and Accident Analysis 15.2.8 Anticipated Transients Without Scram

- 10 CFR 50.62, "Requirements for Reduction of Risk from Anticipated Transients Without Scram (ATWS) Events for Light-Water-Cooled Nuclear Power Plants."
- Diverse actuation system (DAS).
- AP1000 does not include safety-grade emergency feedwater. AP1000 relies on PRHR.
- Commission granted exemption to rule.

U.S.NRC
United States Nuclear Regulatory Commission
Protecting People and the Environment

237

The AP1000 design includes a control-grade diverse actuation system (DAS) to provide an alternate turbine trip signal and an alternate actuation signal of the PRHR system for decay heat removal, which are separate and diverse from the safety-grade RTS and PRHR normal actuation signals. The DAS also provides a diverse scram function. SER Section 7.7 discusses the NRC staff's review and acceptance of Westinghouse's DAS design. The AP1000 design relies on the PRHR in lieu of an auxiliary or emergency feedwater system as its safety-related method for removing decay heat.

As discussed in SER Section 15.2.9, the NRC staff concluded that Westinghouse's request for exemption to the ATWS Rule of 10 CFR 50.62 is acceptable. Specifically, the exemption request applies to 10 CFR 50.62(c)(1), which requires auxiliary or emergency feedwater as an alternate system for decay heat removal during an ATWS event. The AP1000 design relies on the PRHR in lieu of an auxiliary or emergency feedwater system as its safety-related method of removing decay heat. The NRC staff concluded that the AP1000 design meets the underlying purpose of the ATWS Rule by relying on the PRHR system to remove the decay heat. In accordance with 10 CFR 50.12(a)(2)(ii) for the AP1000 design, the requirement for an emergency feedwater system is not necessary to achieve the underlying purpose of 10 CFR 50.62(c)(1). Therefore, the exemption request is acceptable.

Transient and Accident Analysis 15.3 Radiological Consequences of Accidents

- The analyzed DBAs include the following:
  - MSLB outside containment.
  - RCP shaft seizure (locked rotor).
  - RCCA ejection.
  - Failure of small lines carrying primary coolant outside containment.
  - SGTR.
  - LOCA.
  - Fuel-handling accident.

U.S.NRC
United States Nuclear Regulatory Commission
Protecting People and the Environment

238

In DCD Tier 2, Chapter 15, Westinghouse concluded that the AP1000 design will provide reasonable assurance that the radiological consequences resulting from any of the above DBAs will fall within the offsite dose criterion of 0.25 Sv (25 rem) total effective dose equivalent (TEDE), as specified in 10 CFR 50.34(a)(1)(ii)(D), and the control room operator dose criterion of 0.05 Sv (5 rem), as specified in GDC 19, “Control Room,” of Appendix A to 10 CFR Part 50.

Westinghouse reached this conclusion by performing the following:

- using reactor accident source terms based on NUREG-1465, “Accident Source Terms for Light-Water Nuclear Power Plants,” and RG 1.183, “Alternative Radiological Source Terms for Evaluating Design Basis Accidents at Nuclear Power Reactors.”

Transient and Accident Analysis 15.3 Radiological Consequences of Accidents

SER Evaluation Findings:

- The NRC staff has reviewed the radiological consequences analyses of the DBAs. NRC staff concludes that the AP1000 design meets 10 CFR 50.34(a)(1)(ii)(D) dose criteria and the offsite dose acceptance criteria, as given in RG 1.183 for these accidents.
- NRC performed independent analysis

U.S.NRC
United States Nuclear Regulatory Commission
Protecting People and the Environment

239

The NRC staff has reviewed the radiological consequences analyses of the DBAs described in DCD Tier 2, Chapter 15, for the AP1000 design. Based on the evaluation discussed above, the NRC staff concludes that the AP1000 design meets 10 CFR 50.34(a)(1)(ii)(D) dose criteria and the offsite dose acceptance criteria, as given in RG 1.183 for these accidents.

The NRC staff finds reasonable assurance that the VES, under high-high radiological conditions as described in DCD Tier 2, Section 6.4, can mitigate the dose in the main control room following DBAs to meet the dose criterion specified in GDC 19.

Reactor Coolant System Design 5.4.2.3.1 AP1000 Steam Generator Tube Rupture Mitigation Design Features

- The AP1000 design provides automatic protective actions to mitigate the consequences of an SGTR.
- The automatic actions include reactor trip, actuation of the passive residual heat removal (PRHR) heat exchanger, initiation of core makeup tank flow, termination of pressurizer heater operation, and isolation of chemical and volume control system flow and startup feedwater flow on high steam generator level.

U.S.NRC
United States Nuclear Regulatory Commission
Protecting People and the Environment

240

The AP1000 design provides automatic protective actions to mitigate the consequences of an SGTR. The automatic actions include reactor trip, actuation of the passive residual heat removal (PRHR) heat exchanger, initiation of core makeup tank flow, termination of pressurizer heater operation, and isolation of chemical and volume control system flow and startup feedwater flow on high steam generator level. These protective actions result in automatic cooldown and depressurization of the reactor coolant system, termination of the break flow and release of steam to the atmosphere, and long-term maintenance of stable conditions in the reactor coolant system. These protection systems serve to prevent steam generator overfill and to maintain offsite radiation doses within the allowable guideline values for a design basis SGTR. The operator may take actions that would provide a more rapid mitigation of the consequences of an SGTR.

The staff concludes that there is reasonable assurance that the unique design features of the AP1000 are capable of mitigating the consequences of a multiple tube rupture. In the extremely unlikely event that the PORV fails to open coincident with a stuck-open MSSV, no core damage will occur, and the total release to the atmosphere would be limited to the initial activity of the RCS. The staff concludes that there is reasonable assurance that the containment bypass resulting from a multiple tube rupture poses no undue threat to public health and safety, and the AP1000 design satisfies the provisions of SECY-93-087.

Reactor Coolant System Design 5.4.2.3.1 AP1000 Steam Generator Tube Rupture Mitigation Design Features

- These protective actions result in automatic cooldown and depressurization of the reactor coolant system, termination of the break flow and release of steam to the atmosphere, and long-term maintenance of stable conditions in the reactor coolant system.

- These protection systems serve to prevent steam generator overfill and to maintain offsite radiation doses within the allowable guideline values for a design basis SGTR. The operator may take actions that would provide a more rapid mitigation of the consequences of an SGTR.

U.S.NRC
United States Nuclear Regulatory Commission
Protecting People and the Environment

Reactor Coolant System Design 5.4.2.3.2 Multiple Steam Generator Tube Rupture Analysis

- Not design basis event.
- In SECY-93-087 the NRC staff states its position that an applicant for a passive PWR design certification should assess features to mitigate the amount of containment bypass leakage that could result from the rupture of multiple SG tubes.
- The AP1000 provides defense-in-depth to mitigate multiple SGTRs.
- The active, non-safety-related systems can be used to mitigate multiple SGTRs. The intact SG PORV is used to control the RCS pressure and isolate the break. The CVS auxiliary spray is used to reduce the RCS pressure to allow the pumped RNS to provide borated makeup flow to the system until the break is isolated.

U.S.NRC
United States Nuclear Regulatory Commission
Protecting People and the Environment

242

The DCD does not address multiple SGTR analysis, except in Section 1.9.4.2.3 New Generic Issues, as NUREG-0933, Issue 163, i.e., multiple steam generator tube leaks triggered by a main steam line break (MSLB) outside containment that cannot be isolated.

The AP1000 provides defense-in-depth to mitigate multiple SGTRs. The active, nonsafety-related systems can be used to mitigate multiple SGTRs. The intact SG PORV is used to control the RCS pressure and isolate the break. The CVS auxiliary spray is used to reduce the RCS pressure to allow the pumped RNS to provide borated makeup flow to the system until the break is isolated. If both the active non-safety-related mitigation and the safety-related PRHR HX mitigation fails, the AP1000 provides another defense-in-depth method of mitigation. This method uses the ADS and passive safety injection.

On the secondary side, a PORV is installed on the outlet piping from each SG to provide a means for plant cooldown by discharging steam to the atmosphere when the turbine bypass system is not available. The PORV automatically opens to release steam when the steam pressure exceeds its predetermined set pressure, which is below the main steam safety valve (MSSV) set pressure. The PORV will close and reseat at a pressure below the opening setpoint as the steam pressure decreases.

In the event that the PORV fails to open during a SGTR, the MSSVs could open. Because of the automatic SG overfill protection, which trips the CVS and SUFS flow, the SG is not overfilled and only steam is released through the MSSV. If the MSSV is assumed to fail open, the PRHR HX will not be able to terminate the loss of reactor coolant. The loss of primary system coolant through the SG tube and the stuck open valve eventually causes the CMTs to drain to the ADS actuation setpoint. Actuation of the ADS depressurizes the RCS in a controlled, staged manner, and eventually allows for gravity injection from the IRWST and the containment recirculation as the IRWST empties.

Reactor Coolant System Design 5.4.2.3.1 AP1000 Steam Generator Tube Rupture Mitigation Design Features

- On the secondary side, a PORV is installed on the outlet piping from each SG to provide a means for plant cooldown by discharging steam to the atmosphere. The PORV automatically opens to release steam when the steam pressure exceeds its set pressure.
- Because of the automatic SG overfill protection, which trips the CVS and SUFS flow, the SG is not overfilled and only steam is released through the MSSV.
- The loss of primary system coolant through the SG tube and the stuck open valve eventually causes the CMTs to drain to the ADS actuation setpoint. Actuation of the ADS depressurizes the RCS in a staged manner, and allows gravity injection from the IRWST and the containment recirculation as the IRWST empties.

U.S.NRC
United States Nuclear Regulatory Commission
Protecting People and the Environment

243

On the secondary side, a PORV is installed on the outlet piping from each SG to provide a means for plant cooldown by discharging steam to the atmosphere when the turbine bypass system is not available. The PORV automatically opens to release steam when the steam pressure exceeds its set pressure.

Because of the automatic SG overfill protection, which trips the CVS and SUFS flow, the SG is not overfilled and only steam is released through the MSSV. The loss of primary system coolant through the SG tube and the stuck open valve eventually causes the CMTs to drain to the ADS actuation setpoint. Actuation of the ADS depressurizes the RCS in a controlled, staged manner, and eventually allows for gravity injection from the IRWST and the containment recirculation as the IRWST empties.

Since there is no SRP that address multiple SGTRs, there are no SRP acceptance criteria. The staff concludes that there is reasonable assurance that the unique design features of the AP1000 are capable of mitigating the consequences of a multiple tube rupture. In the extremely unlikely event that the PORV fails to open coincident with a stuck-open MSSV, no core damage will occur, and the total release to the atmosphere would be limited to the initial activity of the RCS. The staff concludes that there is reasonable assurance that the containment bypass resulting from a multiple tube rupture poses no undue threat to public health and safety, and the AP1000 design satisfies the provisions of SECY-93-087.

Reactor Coolant System Design 5.4.2.3.1 AP1000 Steam Generator Tube Rupture Mitigation Design Features

- RAI 440.043: Westinghouse provided an analysis of the beyond-design-basis event of a multiple-tube rupture.
  - The analysis demonstrated the capability of the safety systems and automatic actions for mitigation of the MSGTR events. No operator actions were modeled in the analysis.
  - The analysis was performed with the MAAP4 code.
  - Five simultaneous cold leg tube ruptures.
  - The results of the MSGTR show the core is covered.

- **The staff concluded that no additional analyses are required and that no core damage will occur.**

U.S.NRC
United States Nuclear Regulatory Commission
Protecting People and the Environment

244

RAI 440.043: The applicant provided an analysis of the beyond-design-basis events of a multiple-tube rupture of five tubes. The intent of the analysis was to demonstrate the capability of the safety systems and automatic actions for mitigation of the MSGTR events. No operator actions were modeled in the analysis. The analysis was performed with the MAAP4 code. The applicant analyzed two cases of five-tube rupture using the MAAP4 accident analysis code. The first assumed multiple SGTR with passive system response, and the second assumed multiple SGTR with failed open MSSV. In both cases, the accident was initiated by the simultaneous, double-ended failure of five cold side tubes at the top of the tube sheet. Startup feedwater system and the CVS were conservatively assumed to function because they tend to make the accident worse. Since the results of the MSGTR events show the core is covered with the collapsed liquid level well above the top of the fuel and therefore have large margins to core uncovery, the staff concludes that no additional analyses are required and that no core damage will occur.

AP1000 Operations and Programs

Module 9
SER Sections 13.4 - 13.6 and 14

INSTRUCTOR: Scott Newberry

October 2008

U.S.NRC
United States Nuclear Regulatory Commission
Protecting People and the Environment

To begin, introduce self and state the title of the presentation.

Learning Objectives

- Class Participants are expected to understand:
  - The NRC requirements, acceptance criteria, and review approach for all testing programs focusing on: overall pre-operation, power ascension, and criticality.
  - Special first of a kind testing that must be performed.
  - Proposed and approved exceptions.
  - Significant staff questions.
  - ITAAC and DAC commitments and approvals.
  - COL test program responsibilities.
  - The requirements, and basis for acceptance of, the for operations and procedures.
  - The fundamental aspects for NRC acceptance of the AP1000 design from the security standpoint and the COL applicant requirements.
  - The updated NRC approach to security as it applies to the AP1000.

U.S.NRC
United States Nuclear Regulatory Commission
Protecting People and the Environment

246

During the presentation, read the slide and then state the following: “My goal is achieve these objectives and to provide references for you to obtain more information should you desire to do so.”

NRC Requirements and Guidance Initial Test Programs

- The governing documents are:
  - 10 CFR 52.47(a)(i).
  - RG 1.68, "Initial Test Programs for Water-Cooled Nuclear Power Plants," Revision 2, dated August 1978.
  - SRP Section 14.2, "Initial Test Program," Revision 2, dated July 1981.
- As stated in RG 1.68, the primary objectives of an acceptable initial test program are:
  1. To provide assurance through testing that the facility has been **adequately designed.**
  2. To validate, to the extent practical, the **analytical models** and verify the correctness or conservatism of assumptions used to predict plant responses to anticipated transients and postulated accidents.
  3. To provide assurance through testing that **construction and installation** of equipment in the facility have been accomplished in accordance with the design.
  4. To **familiarize the plant's operating staff** with the operation of the facility.
  5. To verify by trial use, to the extent practical, the adequacy of the facility's **operating procedures** and emergency operating procedures.

U.S.NRC
United States Nuclear Regulatory Commission
Protecting People and the Environment

247

- I would like to note the following: 10 CFR 52.47(a)(i) states that: an applicant for design certification must submit the technical information required of applicants for operating licenses that is technically relevant to the design and not site specific. In accordance with the requirements of 10 CFR 52.79 and 10 CFR 50.34(b)(6)(iii), an applicant for an operating license shall provide information concerning plans for preoperational testing and initial operations.

- Additionally, RG 1.68 states that, "Initial Test Programs for Water-Cooled Nuclear Power Plants," Revision 2, dated August 1978, describes the general scope and depth of the initial test programs acceptable to the NRC staff for light-water-cooled nuclear power plants. Also, SRP Section 14.2 states that, "Initial Test Program," Revision 2, dated July 1981, provides guidance to the NRC staff for the review of a proposed initial test program.

- As you can see, the last two issues get into operational issues that are outside the scope of a DC review.

Regulatory Position

- For each phase of the initial test program, a design certification applicant should provide test abstracts which include the objectives of each test, a summary of prerequisites and test methods, and specific acceptance criteria
- The initial test program should address programmatic aspects, including:
  - Consideration of organization and staffing.
  - Preparation, review, and technical content of test procedures.
  - Conduct of the test program.
  - Review, evaluation, and approval of test results.
  - Utilization of reactor operating and testing experiences.
- Conformance of a proposed test program to the guidelines of RG 1.68.

U.S.NRC
United States Nuclear Regulatory Commission
Protecting People and the Environment

248

Review the points on the slide individually.

AP1000 DCD Content
Initial Testing Program

- Section 14.2 addresses all aspects of the test program
  - Describes all aspects of the testing programs using NRC RG 1.68.
  - Provides information for each type of test.
  - Pre-operation.
  - Startup.
  - Criticality power ascension.
  - Test description with justification for unique tests and exceptions:
    - Purpose
    - Prerequisites
    - General test methods
    - Acceptance criteria

U.S.NRC
United States Nuclear Regulatory Commission
Protecting People and the Environment

249

The next few slides provide an overview of what Westinghouse proposed.

The high level DCD Tier 1 commitment for a test program is in Section 3.4

DCD (cont.)

- DCD Section 14.2.5,"Utilization of Reactor Operating and Testing Experiences in the Development of the Test Program," states the following:
  - The design, testing, startup, and operating experience from previous pressurized water reactor plants is utilized in the development of the initial preoperational and startup test program for the AP1000 plant.
  - Other sources of experience reported and described in various documents such as NRC reports, including NRC bulletins, and Institute of Nuclear Power Operations (INPO) reports including Significant Operating Event Reports (SOERs), are also utilized in the AP1000 initial preoperational and startup test program.

U.S.NRC
United States Nuclear Regulatory Commission
Protecting People and the Environment

Proposed Special Tests

- First-plant-only tests:

1. In-Containment Refueling Water Storage Tank (IRWST) heatup test.
2. Pressurizer surge line stratification evaluation.
3. Reactor vessel internals vibration testing.
4. Natural circulation tests.
5. Rod cluster control assembly out-of-bank measurements.
6. Load follow demonstration test.

U.S.NRC
United States Nuclear Regulatory Commission
Protecting People and the Environment

251

Special tests were proposed by the applicant for review.

The six first-plant-only tests are listed on this slide. I will briefly mention the purpose of each test.

The purpose of the In-Containment Refueling Water Storage Tank heatup test is to observe the thermal profile developed during the heatup of the IRWST water during operation of the passive residual heat removal system heat exchanger (PRHR HX). This test will confirm the results of the AP1000 design certification program passive residual heat removal, or PRHR, tests with regard to IRWST mixing, and quantify the conservatism in the transient analyses.

The purpose of the pressurizer surge line stratification evaluation test is to verify piping code conformance by analysis and hot functional testing (NRC Bulletin (BL) 88-11, “Pressurizer Surge Line Thermal Stratification).

The reactor vessel internals vibration test is consistent with the guidelines of RG 1.20 “Comprehensive Vibration Assessment Program for Reactor Internals During Preoperational and Initial Startup Testing,” for a comprehensive vibration assessment program.

The Natural circulation tests using the steam generators (SGs) and the PRHR HX will be performed at low-core power during the startup test phase. The applicant classified this test as a first plant only test because its purpose is to obtain data to benchmark the operator training simulator.

The rod cluster control assembly out-of-bank test is required to be performed only for the first plant because its purpose is to validate calculation tools and instrument responses.

Although RG 1.68 does not specify a load follow demonstration test, the AP1000 performs load follow with grey control rods. Therefore, the applicant has included a proof of principle load follow demonstration for the first AP1000 plant to demonstrate its ability to follow a design-basis daily load follow cycle.

Proposed Special Tests (cont.)

- First-three-plants tests:
  - Core Makeup Tank (CMT) heated recirculation tests
  - Automatic Depressurization System (ADS) blowdown test

U.S.NRC
United States Nuclear Regulatory Commission
Protecting People and the Environment

252

During preoperational testing of the passive core cooling system, a natural circulation heatup of the CMTs, followed by a test to verify the ability of the CMTs to transition from a recirculation mode to a draindown mode while at elevated temperature and pressure, will be performed. The applicant classified this test as a first-three-plant test because the natural circulation of the CMTs will not vary from plant to plant. Additionally, the applicant noted that performance of this test results in significant thermal transients on Class 1 components, including the CMTs and the direct vessel injection nozzles.

During preoperational hot functional testing of the reactor coolant system (RCS), an ADS blowdown test will be performed. This will result in a significant blowdown of the RCS into the IRWST. This test verifies proper operation of the ADS valves and demonstrates the proper operation of the ADS spargers to limit the hydrodynamic loads in containment to less than design limits. The applicant classified this test as a first-three-plant test because operation of the ADS and the resultant hydrodynamic loads will not vary from plant to plant. Additionally, the applicant noted that performance of this test results in significant thermal transients on Class 1 components, including the primary components. It also results in hydrodynamic loads in containment, including the IRWST.

NRC Review

- To ensure the adequacy of the AP1000 testing scope, general test methods, and test program acceptance criteria, the staff developed a review plan to address the overall test program associated with the features of the AP1000 (this was the major open item 14.2-1 in the initial review).

U.S.NRC
United States Nuclear Regulatory Commission
Protecting People and the Environment

253

While presenting the slide, note that significant review activity took place in the preoperational testing area, including the review of the need for additional ITAAC.

Read the slide.

Staff Review

- The structured review plan was developed and implemented by the NRC staff. It consisted of the following activities:
  - Verify that the AP1000 initial test program adequately demonstrates the performance of SSCs important to safety which are as follows:
    - Safety-related.
    - Within the scope of Regulatory Treatment of Non-Safety Systems (RTNSS).
    - Within the scope of the Design Reliability Assurance Program (D-RAP) as important to safety.
  - Verify that test abstracts included in DCD Section 14.2 adequately describe the required testing.
  - Verify that the preoperational test program was consistent with the system-based Inspections, Tests, Analyses, and Acceptance Criteria (ITAAC) described in DCD Tier 1 information. This review ensured that the preoperational testing abstracts contained in DCD Tier 2, Chapter 14.2, were consistent with ITAAC requirements.
  - Additionally, the staff verified that the preoperational test program included all initial test program activities associated with the ITAAC and that they would be accomplished prior to initial fuel loading.

U.S.NRC
United States Nuclear Regulatory Commission
Protecting People and the Environment

254

Read through the slide content

While presenting this slide, note that plant unique features were considered including those RTNSS equipment and that verification of consistency with ITAAC was also performed.

Staff Review (cont.)

- The staff identified 28 specific areas where additional information was required from the applicant to complete the design-specific testing review.
- Each RAI reflected a detailed comparison of the DCD proposal and a justification for departing from a particular RG or element of RG 1.68.
- Each RAI is discussed in Sections 14.2.9 and 14.2.10. All were resolved based on responses from Westinghouse.

U.S.NRC
United States Nuclear Regulatory Commission
Protecting People and the Environment

255

Read the slide.

This presentation will focus on the areas where the staff review allowed special exceptions to regulatory guidance and the special tests proposed by Westinghouse.

Staff Review

- A test by test and RG by RG comparison by the staff identified a number of tests needing clarification or in some cases, exceptions:
  - Exceptions:
    - DC power test-alternative test approved for the ADS squib valves so they would not have to be fired.
    - Safe shutdown criteria for the passive PRHX differs from typical PWR RHR.
  - Clarifications:
    - Natural circulation testing test and basis-this capability is not part of the safety case but will be tested.
    - Battery test criteria: the NRC staff considered alternative IEEE battery test standards.
    - Remote shutdown panel testing-clarification was provided by the applicant.

U.S.NRC
United States Nuclear Regulatory Commission
Protecting People and the Environment

256

The exceptions and clarifications resulting from the review are listed on this slide. They all related to the unique characteristics of the AP1000.

Read through the slide.

SER Evaluation Findings

- The applicant provided **test abstracts** which included the following: the objectives of each test, a summary of prerequisites and test method, and specific acceptance criteria.
- The initial test program addressed programmatic aspects, including consideration of organization and staffing; preparation, review, and technical content of test procedures; conduct of the test program; review, evaluation, and approval of test results; and utilization of reactor operating and testing experiences.
- The staff determined that the applicant adequately addressed the methods and guidance in SRP Section 14.2, Revision 2, and all the applicable RGs (e.g., RG 1.68) referenced in SRP Section 14.2 in developing the AP1000 initial test program. ***"The AP1000 initial test program will demonstrate, with reasonable assurance, that the SSCs important to safety will adequately perform their intended function"***

U.S.NRC
United States Nuclear Regulatory Commission
Protecting People and the Environment

257

The staff conclusion is listed on this slide.

Read the slide.

An important point is made about the special tests, however, we will review these on the next slide.

NRC Review

- **The staff did not evaluate the acceptability of performing these special tests on either a first plant only or first three plant basis during the design certification review.**
- **This is COL action item (14.4-6**).

U.S.NRC
United States Nuclear Regulatory Commission
Protecting People and the Environment

258

This is an important point.

The staff evaluation, while finding the special tests acceptable, will require the COL to provide justification regarding their success and limited application.

Staff Review of Testing/ITAAC SRP 14.3-Tier 1 Information

- The staff performed a detailed review with many questions, investigating areas where an additional ITAAC or commitment was necessary. Some examples are:
  - Containment wall thickness
  - CVCS instruments and controls
  - CRD penetration access and inspectability
  - Accessibility of components for inspection
  - DRAP component lists
  - Cable pulling procedures, standards, and ITAAC
  - Containment sump design change (review still continues as of 10/08)
- In most cases, Westinghouse justified that additional Tier 1 information was not needed. One ITTAC was added; cable pulling. The cable pulling commitment is provided here as an example:
  - Inspections, Test, Analyses
    - Inspections will be performed of the as-installed Class 1E equipment and the associated wiring, cables and terminations located in a harsh environment.
  - Acceptance Criteria
    - A report exists and concludes that the as-installed Class 1E equipment and the associated wiring, cables, and terminations identified in [DCD Tier 1,]Table 2.1.2-1 as being qualified for a harsh environment are bounded by type tests, analyses or a combination of type tests and analyses.

U.S.NRC
United States Nuclear Regulatory Commission
Protecting People and the Environment

259

Let us turn to the second part of Chapter 14—the review of Tier 1 information in the DCD especially the ITAAC and the DAC

Section 14.3 of the DCD provides a structured methodology to determine the elements of the design and safety analysis that are the most important and should make up the CDM (Certified Design Material) for inclusion into Tier 1. This includes both the design commitment and the verification activity (ITAAC).

This slide gives a list of many of the review areas of the staff—not all. This was a significant review with many questions.

In-depth review of the testing/ITAAC area was performed. This included an on-site audit at Westinghouse.

Westinghouse provided significant additional information in response to these questions. This included more precise descriptions, if not in Tier 1, in the Tier 2 information supporting Tier 1.—or in some cases Tier 2*.

Remember that the primary objectives were to make Tier 1 information a final resolution of the important elements of the design that are difficult to change. This includes the ITAAC.

Read through the slide.

Design Acceptance Criteria

- The justification for using Design Acceptance Criteria (DAC) is discussed in 14.3 along with the results of the staff review of each DAC. The staff concluded that DAC is limited to the following areas:
  - Instrumentation and control
  - Human Factors
  - Piping

U.S.NRC
United States Nuclear Regulatory Commission
Protecting People and the Environment

260

Read the slide.

The final point of this presentation is noting that the staff makes a conclusion on the applicability of DAC - Design Acceptance Criteria in the SER.

The specifics of these areas are discussed in other presentations. The point of this review was to confirm consistency in requirements and approach.

COL Items

- Because facility staffing will be determined by the COL applicant and is outside the scope of design certification, the NRC staff determined that it is acceptable to defer responsibility for the description of specific staff, staff responsibilities, authorities, and personnel qualifications for the AP1000 initial test program to the COL applicant.
- Because development of the initial test program and test procedures will require detailed plant-specific design information and review and approval by the COL applicant, the NRC staff concurs that deferring responsibility for the development of detailed preoperational and startup test specifications and procedures to the COL applicant is acceptable.
- In as much as test results will not be available until a facility is built, the NRC staff determined that it is appropriate and acceptable to defer the review and evaluation of individual test results to the COL applicant or COL holder, as appropriate. This is COL Action Item 14.4-4. Section 14.4 of this SER which provides additional detail on this item.
- The COL applicant is responsible for a startup administration manual which contains the administrative procedures and standards that govern the activities associated with the plant initial test program. Therefore, the NRC staff concluded it is acceptable to defer the review of the trial use of operating and emergency procedures to the COL phase.

U.S.NRC
United States Nuclear Regulatory Commission
Protecting People and the Environment

261

Rather than approving all aspects of the preoperational testing program, the AP1000 SER makes it clear that the final responsibility for many things rests with the COL applicant.

Certainly the NRC approved major aspects of the test program, but the final review, procedures, and administration responsibility will be done by the COL applicant. This slide summarizes these responsibilities.

Read the slide.

That completes the discussion of the test programs and the related responsibilities of the COL applicant. Now, lets look at another part of the AP1000 review that is the related aspect of the Operational Programs and Procedures. We will also touch on the review of security features of the AP1000.

Operations and Procedures

- 13.4 Operational Review
  - This section is fully the responsibility of the applicant.
- 13.5 Plant Procedures
  - Are fully the responsibility of the applicant.
  - It is noted in the DCD that many specific areas (system operation, surveillance, etc) are required input to plant procedures.

U.S.NRC
United States Nuclear Regulatory Commission
Protecting People and the Environment

262

We will now shift to Chapter 13 of the NRC review, which covers operational programs and procedures.

Operational and procedural aspects are the responsibility of the COL applicant.

It is noted that there are important inputs to plant programs in the DCD and supporting Westinghouse documents: WCAP-14690, Revision 1, “Designer’s Input to Procedure Development for the AP600,” issued June 1997.

The last aspect to cover is security.

13.6 Security

- The DCD describes the security features of the AP1000 (barriers, lighting, power, etc.).
- Considerable activity is still underway at the NRC in this area and is outside the scope of this presentation. This includes changes to the AP1000.
- Summary of SER Evaluation findings for the AP1000 is:
  - The security plan is the responsibility of the COL applicant.
  - Certain aspects of the design meet Part 72 requirements.
  - Plant features don't preclude the COL from meeting all requirements.

U.S.NRC
United States Nuclear Regulatory Commission
Protecting People and the Environment

263

Read through the following which parallels the slide:

All aspects of the security plan and organization are the responsibility of the COL applicant.

The SER states the following in 13.6.5 on Security Plan: "The COL applicant must (1) address the testing and maintenance in accordance with 10 CFR 73.55(g), (2) address general criteria for security personnel in accordance with 10 CFR Part 73, Appendix B, (3) develop security procedures in accordance with 10 CFR 73.55(b)(3) and (4) ensure only appropriately trained persons perform security job duties in accordance with 10 CFR 73.55(b)(4)(i)." This is COL Action Item.

Certain aspects of the AP1000 design are noted as meeting staff regulations for protective barriers in Section 13.6.5 of the SER. These include the following:

The MCR, central alarm station, **nor** the secondary alarm station contain windows. The staff finds that these measures satisfy the requirements of10 CFR 73.55(c)(6) and (e)(1) and are acceptable.

The vital area designations on the layout drawings in the AP1000 Security Assessment, Revision 1,indicate proposed vital areas that include the MCR and the central alarm station. These drawings also designate the security power supply to be located within a vital area. The staff finds that these measures satisfy the requirements of 10 CFR 73.55(c)(1), (e)(1) and(d)(7)(i)(D) and are acceptable.

The staff concluded that there were no design features described in DCD Tier 2, Section 13.6,"Security," which would prevent the establishment and maintenance of an onsite physical protection system and security organization that would have as its objective to provide high assurance that activities involving special nuclear material are not inimical to the common defense and security and do not constitute an unreasonable risk to public health and safety, as required by 10 CFR 73.55. These are the responsibility of the COL applicant.

Much work still continues at the NRC relative to the design certification and COL processes.

AP1000 Testing and Codes

Module 10
SER Section 21

INSTRUCTOR: Jack Rosenthal
October 2008

U.S.NRC
United States Nuclear Regulatory Commission
Protecting People and the Environment

Testing and Codes Learning Objectives

- Class Participants are expected to understand:
  - Regulatory concerns with the passive safety features of the AP1000 design, and the process used by Westinghouse and the staff to address these concerns.
  - Regulatory requirements and guidance for new passive safety systems.
  - The basis for acceptability of the analysis methods used to assess the safety of the AP1000.

U.S.NRC
United States Nuclear Regulatory Commission
Protecting People and the Environment

265

Commission required test program to ensure that dynamics of passive design plant was well understood. Westinghouse conducted a systematic program of phenomena identification, scaling, test, code validation. NRC staff participated in all aspects of the program.

Understand the test program for the AP1000 and the applicability of the AP600 tests to AP1000.

Understand the extent of the Westinghouse test program for passive safety systems, and extensive documentation which provides the technical basis for the staff's findings.

Understand the NRC activities in the test program.

Participants should understand the role of the NRC in the approval process.

The training participants should understand the regulatory basis for acceptable of the numerical codes and models used in the AP1000 Safety Assessment.

Participants should understand how the AP1000 approval is based on the AP600 design certification.

Testing and Codes

- 10 CFR Part 52, “Early Site Permits; Standard Design Certification; and Combined Licenses for Nuclear Power Plants,” - standard design that “utilizes simplified, inherent, passive, or other innovative means to accomplish its safety functions.
  - (1) The performance of each safety feature of the design has been demonstrated through either analysis, appropriate test programs, experience, or a combination thereof.
  - (2) Interdependent effects among the safety features of the design have been found acceptable by analysis, appropriate test programs, experience, or a combination thereof.
  - (3) Sufficient data exist on the safety features of the design to assess the analytical tools used for safety analyses over a sufficient range of normal operating conditions, transient conditions, and specified accident sequences, including equilibrium core conditions.

U.S.NRC
United States Nuclear Regulatory Commission
Protecting People and the Environment

266

Rule motivated by uncertainty in the knowledge of passive safety systems. Without the many years of experience with generation II reactors, the Commission requires testing.

Testing and Codes

- RG 1.157, Best-Estimate Calculations of Emergency Core Cooling System Performance, 5/1989.
- RG 1.203, Transient and Accident Analysis Methods, 12/2005.
- B. Boyack, et al., “Quantifying Reactor Safety Margins, Application of Code, Scaling, Applicability, and Uncertainty Evaluation Methodology to a Large Break, Loss-of-Coolant Accident,” NUREG/CR-5249, USNRC, December 1989, referred to as CSAU.

U.S.NRC
United States Nuclear Regulatory Commission
Protecting People and the Environment

267

RG 1.157 concepts extended to passive design.

RG 1.203 issued after staff SER, provides explanation of evaluation model CSAU formalism originally intended to LBLOCA extended to all transient and accident analysis.

Testing and Codes

- **Passive Safety Features**
  - Passive safety systems use only natural forces, requiring no continuously operating, electrically [alternating current (ac)] powered, mechanical components (such as pumps).
  - Core Makeup Tank (CMT).
  - Passive Containment Cooling System (PCS) – Ultimate Heat Sink.
  - Passive Residual Heat Removal System (PRHR).
  - Automatic Depressurization System (ADS).
  - Accumulators – Higher Pressure.

U.S.NRC
United States Nuclear Regulatory Commission
Protecting People and the Environment

268

The AP1000 standard design is a two-loop, pressurized-water reactor (PWR) with an electric output of approximately 1,117 MWe. As such, the AP1000 is a passive plant design that represents an evolution from the AP600 design, which has an electric output of approximately 600 MWe and was the first passive, advanced light-water reactor (ALWR) design reviewed by the U.S. Nuclear Regulatory Commission (NRC). These advanced plant designs differ from conventional PWRs in that they use passive safety systems to provide the means to cool the reactor core following an accident.

In the context of the AP600 and AP1000 passive plant designs, the natural forces include gravity, natural circulation, compressed gas, and stored mechanical energy. Also included in the definition of “passive” systems are components that may use electrical power supplied by batteries [direct current (dc)] to change state; however, if called upon to function, these components change state only once (i.e., a valve can change from “closed” to “open,” but remains open thereafter). Check valves, which use no power and open or close according to the differential pressure across the valve, are also included in the passive systems.

Specific issues related to CMT operation include the following:

- recirculation and gravity drain behavior, including condensation during draining.
- thermal stratification in the CMTs.
- effects of system depressurization on heated CMT behavior.

The following issues are important to ADS operation:

- ADS valve performance and reliability.
- critical flow through the various components of the ADS network (valves, pipes, spargers), including transition from critical to subcritical flow.
- the effects of condensation in the IRWST on ADS system performance, including mechanical and thermal loading on the IRWST and submerged mechanical components such as pipes, spargers, and HXs.
- the severity of IRWST vibration due to ADS system performance.

The main issues related to PRHR system operation follow:

- natural convection heat transfer in the tube bundle.
- heat transfer on the IRWST side of the tubes, especially in two-phase flow, where critical heat flux and vapor blanketing of the tubes may be of concern.

Testing and Codes

- Passive systems conceptually simpler than conventional active systems.
- Potentially more susceptible to system interactions that can upset the balance of forces on which passive safety systems depend for operation.
- Understanding phenomenology, analysis and system performance critical.

U.S.NRC
United States Nuclear Regulatory Commission
Protecting People and the Environment

269

Specific issues related to CMT operation include the following:

- recirculation and gravity drain behavior, including condensation during draining.
- thermal stratification in the CMTs.
- effects of system depressurization on heated CMT behavior.

The following issues are important to ADS operation:

- ADS valve performance and reliability.
- critical flow through the various components of the ADS network (valves, pipes, spargers), including transition from critical to subcritical flow.
- the effects of condensation in the IRWST on ADS system performance, including mechanical and thermal loading on the IRWST and submerged mechanical components such as pipes, spargers, and HXs.
- the severity of IRWST vibration due to ADS system performance.

The main issues related to PRHR system operation follow:

- natural convection heat transfer in the tube bundle.
- heat transfer on the IRWST side of the tubes, especially in two-phase flow, where critical heat flux and vapor blanketing of the tubes may be of concern.

Interdependency of Systems:

- The close coupling between AP1000 safety systems and the multiple flow paths that can develop, especially with the small pressure differentials characteristic of natural circulation flows, makes the AP1000 a complex system to analyze.

- In addition to component and safety system performance on a system-by-system basis, there are systems interactions that must also be considered in the AP1000 design. The safety systems in the AP1000 design are highly interdependent in their influence on plant response.

Testing

- Differences between AP1000 and AP 600:
  - Taller reactor core with a longer active fuel length, more fuel assemblies, and higher power density.
  - Larger pressurizer; larger SGs with more tubes.
  - Larger canned RCPs with higher head, capacity, and inertia.
  - Taller containment with a larger free volume.

U.S.NRC
United States Nuclear Regulatory Commission
Protecting People and the Environment

270

The major differences between the AP1000 and the AP600 plant designs are an increased thermal power (approximately 3,400 megawatt thermal (MWt) versus 1,933 MWt, respectively) and increased capacities of the major components of the AP1000 to accommodate the increased thermal output. In particular, the AP1000 reactor system has a taller reactor core with a longer active fuel length, more fuel assemblies, and higher power density; a larger pressurizer; larger SGs with more tubes and larger heat transfer areas; and larger canned RCPs with higher head, capacity, and inertia. In addition to a taller containment with a larger free volume, the capability of the AP1000 passive safety systems is increased with a larger CMT diameter; a larger IRWST and larger injection line diameters; a larger PRHR system with more tubes and longer tube length in the HX, and larger inlet and outlet line diameter; and larger valve and flow path diameters for Stage 4 of the ADS.

Testing

Capability of the AP1000 passive safety systems is increased with:

- a larger CMT diameter;
- a larger IRWST;
- larger injection line diameters;
- increased thermal power 3,400 MWt versus 1,933 MWt results in increased capacities of the major components;
- larger PRHR system with more tubes and longer tube length in the HX, and larger inlet and outlet line diameter;
- and larger valve and flow path diameters for Stage 4 of the ADS.

U.S.NRC
United States Nuclear Regulatory Commission
Protecting People and the Environment

271

Results in larger passive safety systems. Pipe lengths and pressure drop changes compensated by larger pipe diameters and also bigger valves.

Higher power results in less margin.

Testing

- W - AP1000 design incremental change to the AP600 design.
- W - computer codes used for safety analyses of the AP600 design-basis events can be applied to the AP1000 design, and the AP600 test program is sufficient for the AP1000 design.
- The staff evaluated the AP600 test programs for AP1000, and concluded that additional test data needed to address liquid entrainment in the upper plenum and hot-leg. W added APEX-1000 integral test program.
- Since most of the tests were performed at scaled test facilities, scaling analyses were performed to demonstrate the acceptability of the test data base.

U.S.NRC
United States Nuclear Regulatory Commission
Protecting People and the Environment

272

Given these differences, Westinghouse asserted that the AP1000 design represents an incremental change to the AP600 design, because it maintains and preserves the design configuration and arrangement, key design features, and performance characteristics of the AP600 design. Consequently, Westinghouse concluded that the computer codes used for safety analyses of the AP600 design-basis events can be applied to the AP1000 design, and the AP600 test program is sufficient for the AP1000 design. For the AP600 design certification, Westinghouse developed a design certification test program utilizing both separate-effects and integral-systems facilities to investigate the behavior of the codes used to perform the transient and accident analyses. The test programs can be broadly characterized as programs that are related to reactor systems, programs that are related to containment systems, and component testing. The test program to investigate the behavior of the passive core cooling systems include (1) the separate-effects tests on the PRHR HX, ADS, and CMT; and (2) the integral system tests performed at the Advanced Plant Experiment (APEX) facility and the Simulatore per Esperienze di Sicurezza (SPES) facility.

The staff evaluated the adequacy of each of the AP600 test programs for the AP1000 design, and concluded that additional test data were needed to address liquid entrainment in the upper plenum and hot-leg. As a result, Westinghouse added the APEX-1000 integral test program to the AP1000 test program.

Since most of the tests were performed at scaled test facilities, scaling analyses were performed to demonstrate the acceptability of the test data base. The staff performed a detailed evaluation of each program.

Core Makeup Tank Test Program

- Separate-effects test program to characterize the CMT over range of T-H:
  - Important phenomena studied.
  - Tests at Waltz Mill site in Pennsylvania.
  - Evaluation justified that the AP600 CMT test program is applicable to the AP1000 design.
  - Test data and scaling documented.
  - The staff evaluated the CMT test program during the AP600 design certification review.
  - The staff evaluated applicability to the AP1000 design and concluded that the CMT tests are valid for the AP1000 code validation.

U.S.NRC
United States Nuclear Regulatory Commission
Protecting People and the Environment

273

Documentation detail illustrates level of staff involvement and review.

CMT test program was a separate-effects test program developed to characterize the CMT over the range of T-H (pressure, temperature, flow) conditions that it will experience in the plant. Important phenomena studied included thermal stratification in the CMT and the effects of recirculation, draining, and plant depressurization on CMT behavior. Tests were performed at the facility located at the applicant's Waltz Mill site in Pennsylvania. The test article was approximately 3.3 m (10 ft) in height and 0.49 m (1.6 ft) in diameter. Compared to the actual AP600 and AP1000 component, the test article was one-half of the height, and 1/7.77 and 1/8.69, respectively, of the diameters of the AP600 and AP1000 designs.

WCAP-14217, "Core Makeup Tank Test Data Report," and WCAP-14215, "AP600 Core Makeup Tank Test analysis," respectively, provided the CMT test program. The scaling of the CMT tests for the AP600 design were documented in WCAP-13963, Revision 1, "Scaling Logic for the Core Makeup Tank Test." In WCAP-15613, Westinghouse provided its evaluation to justify that the AP600 CMT test program is applicable to the AP1000 design.

The staff evaluated the CMT test program during the AP600 design certification review. For the AP1000 design certification, the staff also evaluated its applicability to the AP1000 design. Based on the staff evaluation, the staff concluded that the CMT tests are valid for the AP1000 code validation.

ADS Test Program

- Separate effects test program at “Vapore,” Italy.
- VAPORE facility incorporated full-scale components, a formal scaling report was not necessary.
- Test program documented.
- The staff evaluated the ADS test program during the AP600 design certification. The staff concluded that tests performed to investigate ADS-1/2/3 valve performance for the AP600 design represent conditions in the AP1000 standard plant design.
- Westinghouse did not perform separate ADS-4 testing.

U.S.NRC
United States Nuclear Regulatory Commission
Protecting People and the Environment

274

The ADS test program consisted of separate-effects tests performed at the facility called “VAPORE,” located at Central Research Establishment of Italian Energy Agency ENEA (Ente per le Nuove Technologie, l’Energia e l’Ambiente, the Italian Energy Agency) at Casaccia, Italy. It has a full-size configuration of the AP600/AP1000 ADS stages 1, 2, and 3 (ADS-1/2/3) piping network, exhaust pipe, and sparger.

WCAP-13342 (“AP600 Automatic Depressurization System Test”), WCAP-14149 (“VAPORE Facility Description Report, AP600 Automatic Depressurization System Phase A Test”), WCAP-14303, “Facility Description Report AP600 ADS Phase B1 Tests.”

PRHR HX Test Program

- Separate effects tests performed at Science and Technology Center near Pittsburgh.
- Tests documented.
- NRC's confirmatory test program in the Rig of Safety Assessment/Large-Scale Test Facility (ROSA/LSTF) loop, which employs a simulated C-tube PRHR HX immersed in a tank of water simulating the IRWST.
- Staff concluded that the PRHR HX model adequately predicted PRHR HX tube and outlet temperatures, and the adequacy of the straight-tube-based correlations for analysis of the C-tube PRHR HX.
- Staff concluded no additional PRHR separate-effects testing needed for the AP1000.

U.S.NRC
United States Nuclear Regulatory Commission
Protecting People and the Environment

275

The staff evaluated the PRHR test program during the AP600 design certification. The staff provided selected data from the NRC's confirmatory test program in the Rig of Safety Assessment/Large-Scale Test Facility (ROSA/LSTF) loop, which employs a simulated C-tube PRHR HX. The data provided to the applicant included the PRHR HX inlet flow and inlet temperature, and the IRWST temperature profile, for two ROSA tests. The applicant used this information to perform a "blind" calculation of the PRHR HX. The staff found that the applicant's correlation predicted tube and outlet temperatures within a few degrees of the data at all times and locations. Staff concluded that the PRHR HX model does an adequate job of predicting PRHR HX tube and outlet temperatures, and that the applicant had demonstrated the adequacy of the straight-tube-based correlations for analysis of the C-tube PRHR HX. The staff's evaluation of the effect of increasing the horizontal length of the AP1000 PRHR HX on the overall heat transfer concluded that no additional PRHR separate-effects testing are needed for the AP1000.

WCAP-12980, Revision 3, "AP600 Passive Residual Heat Removal Heat Exchanger Test Final Report."

APEX-600 Test Program

- Major integral test program conducted by W for AP600 design certification.
- Tests at Oregon State University (OSU) campus in Corvallis, Oregon. The objective of the test program was to obtain integral-systems data for the validation of computer codes used for AP600 safety analyses.
- Documented.
- The staff evaluated the OSU APEX-600 test program during the AP600 design certification.

U.S.NRC
United States Nuclear Regulatory Commission
Protecting People and the Environment

276

The staff evaluated the OSU APEX-600 test program during the AP600 design certification review.

WCAP-14124, “AP600 Low Pressure Integral Systems Test at Oregon State University — Facility Description Report” and WCAP-13234, Revision 1, “Long-Term Cooling Test,” WCAP-14270, Revision 1, “Low Pressure Systems Test Facility Scaling Report,” August 1997.

Applicability of APEX-600 Test Program

– The staff evaluated the applicability of the APEX-600 test program to the AP1000 design.

- The staff determined that the APEX-600 facility is generally appropriately scaled for the AP1000 design, and is acceptable for the AP1000 code validation for the periods of the IRWST injection/drain phase and the IRWST/sump injection phase of a transient.
- **However,** the staff also found that the APEX-600 test data were inadequate for use in the AP1000 code validation in the areas of liquid entrainment in the upper plenum and hot-legs, and core liquid level swell, and that additional test data were needed for the AP1000.
- As a result, Westinghouse conducted the APEX-1000 integral test program.

U.S.NRC
United States Nuclear Regulatory Commission
Protecting People and the Environment

277

For the AP1000 design certification, the staff also evaluated the applicability of the APEX-600 test program to the AP1000 design. The staff determined that the APEX-600 facility is generally appropriately scaled for the AP1000 design, and is acceptable for the AP1000 code validation for the periods of the IRWST injection/drain phase and the IRWST/sump injection phase of a transient. However, the staff also found that the APEX-600 test data were inadequate for use in the AP1000 code validation in the areas of liquid entrainment in the upper plenum and hot-legs, and core liquid level swell, and that additional test data were needed for the AP1000. As a result, Westinghouse conducted the APEX-1000 integral test program.

SPES-2 Test Program

- Integral test at high pressure, full height program performed at the facility located at the Societa' Informazioni Esperienze Termoidrauliche laboratories in Piacenza, Italy, in 1994.
- Extensive documentation.
- The staff evaluated the SPES-2 test program during the AP600 design certification.
- The staff evaluated the applicability of the SPES-2 test program to the AP1000 design.
- The staff's scaling assessment, concludes that code validation on the basis of the SPES facility is acceptable for the AP1000 design for a small-break LOCA in the subcooled blowdown phase, intermediate ADS-1/2/3 blowdown phase, and the high pressure phase of ADS-4 blowdown.

U.S.NRC
United States Nuclear Regulatory Commission
Protecting People and the Environment

278

The SPES-2 test program was documented in several reports, including WCAP-13277 ("Scaling, Design, and Verification of SPES-2, the Italian Experimental Facility Simulator of the AP600 Plant"); WCAP-13277, Revision 1 ("Scaling, Design, and Verification of SPES-2, the Italian Experimental [sic] of the AP600; Scaling Update"); WCAP-14053 ("AP600 FHFP Integral Systems Test Specification"); and WCAP-14073 ("SPES-2 Facility Description"). The final data report and the test analysis report for the SPES-2 program are contained in WCAP-14309, Revision 1, "AP600 Design Certification Program SPES-2 Tests Final Data Report," and WCAP-14254, "AP600 SPES-2 Test Analysis Report," respectively.

The staff evaluated the SPES-2 test program during the AP600 design certification review. For the AP1000 design certification, the staff evaluated the applicability of the SPES-2 test program to the AP1000 design. The staff's scaling assessment, concludes that code validation on the basis of the SPES facility is acceptable for the AP1000 design for a small-break LOCA in the subcooled blowdown phase, intermediate ADS-1/2/3 blowdown phase, and the high pressure phase of ADS-4 blowdown.

OSU APEX-1000 Test Program

- Integral facility modified-increase power, increase pressurizer volume, increased CMT volume, increased IRWST level, increased ADS-4 flow area, increased PRHR flow. The upper core plate and upper plenum of APEX were redesigned to improve the modeling of upper plenum entrainment and core plate flooding.

U.S.NRC
United States Nuclear Regulatory Commission
Protecting People and the Environment

279

The staff found that the APEX-600 test data were inadequate for use in the AP1000 code validation in the areas of liquid entrainment in the upper plenum, hot-legs, and ADS-4 piping, and that additional test data were needed for the AP1000. To address performance specific to the AP1000 design, the APEX-600 facility underwent significant modifications in 2002 to more accurately represent the AP1000 design and was renamed the APEX-1000 Test Facility. These include: increase power, increase pressurizer volume, increased CMT volume, increased IRWST level, increased ADS-4 flow area, increased PRHR flow. The upper core plate and upper plenum of APEX were redesigned in order to improve the modeling of upper plenum entrainment and core plate flooding.

The test matrix focused on SBLOCAs because (1) LOCAs are the only events to cause the ADS to actuate and to progress to long-term cooling within the design basis; and (2) LBLOCA response in the AP600 was calculated to be similar in many ways to conventional designs, and the applicant asserted that important phenomena in LBLOCAs related to long-term cooling would be similar to SBLOCA behavior.

OSU APEX-1000 Test Program

- Special emphasis was placed on scaling upper plenum entrainment, since this had been identified as a nonconservative distortion in the APEX AP600 facility for application to AP1000 design.
- Documented.
- Staff concluded test matrix adequate.

U.S.NRC
United States Nuclear Regulatory Commission
Protecting People and the Environment

280

Explain non-conservative moisture carry over/liquid entrainment.

Underestimating carryover, overestimates core water level.

Documentation:

- OSU-AP1000-01,
- OSU-AP1000-02,
- OSU-AP1000-03,
- OSU-AP1000-04,
- OSU-AP1000-05.

Wind Tunnel Test Program

- One of the principal design objectives for the PCS was that the external wind conditions should not resist the buoyant airflow in the annular region between the containment vessel and the baffle wall.
- Tests at the University of Western Ontario wind tunnel, and in the National Research Council of Canada's wind tunnel in Ottawa, Canada."

U.S.NRC
United States Nuclear Regulatory Commission
Protecting People and the Environment

281

One of the principal design objectives for the PCS was that the external wind conditions should not resist the buoyant airflow in the annular region between the containment vessel and the baffle wall. Counterflow in this region could diminish the natural convective cooling, which constitutes a portion of the total heat removal from the post accident containment atmosphere. To better understand the effects of adverse weather conditions, severe terrain, adjacent structures, and building design variations on the airflow within the annulus, Westinghouse conducted a series of wind tunnel tests on scale models of the AP600 containment.

Documentation:

- WCAP-13294-P, "Phase I Wind Tunnel Testing for the Westinghouse AP600 Reactor;"
- WCAP-13323-P, "Phase II Wind Tunnel Testing for the Westinghouse AP600 Reactor;"
- WCAP-14068-P, "Phase IVA Wind Tunnel Testing for the Westinghouse AP600 Reactor;"
- WCAP-14091, "Phase IVB Wind Tunnel Testing for the Westinghouse AP600 Reactor;"
- PCS-T2C-059, "Analysis of AP600 Wind Tunnel Testing for PCS Heat Removal."

Wind Tunnel Test Program

- Important features of the PCS design in the AP1000 are identical to the PCS design in the AP600. Only the height of the containment has changed.
- The staff considers these test to be applicable to the AP1000.
- Insights and data used to develop WGOTHIC models remain acceptable.

U.S.NRC
United States Nuclear Regulatory Commission
Protecting People and the Environment

282

The important features of the PCS design in the AP1000 are identical to the PCS design in the AP600. These features include the air inlets near the top of the containment structure and the baffle region, including the turning vane. Only the height of the containment has changed. Therefore, the staff considers these test to be applicable to the AP1000 and the insights and data used to develop WGOTHIC models remain acceptable.

PCS Large-Scale Test Program

- The LST facility was located at the Westinghouse Science and Technology Center in Churchill, Pennsylvania. 1/8-linear-scale version of the actual AP600 containment vessel.
- No new phenomena identified.
- Documentation.
- Westinghouse used the AP600 scaling study to support the AP1000 review.
- The LST is only valid for steady-state conditions.
- The LST does support the mass and heat transfer correlations used in the WGOTHIC code for the AP600 and AP1000 designs.
- The staff considers these tests to be applicable to the AP1000 and the insights and data used to develop WGOTHIC models remain acceptable.

U.S.NRC
United States Nuclear Regulatory Commission
Protecting People and the Environment

283

Westinghouse concluded:

Westinghouse used the AP600 scaling study to support the AP1000 review. The LST was not properly scaled for transient situations. The LST is only valid for steady-state conditions. The LST does support the mass and heat transfer correlations used in the WGOTHIC code for the AP600 and AP1000 designs.

- Evaporation was the primary mode of heat removal from the outside of the vessel (approximately 75 percent of the total), followed by sensible heating of the subcooled liquid film (approximately 17 percent of the total). The remainder of the heat was transferred to the environment by convection and radiation.
- The heat removal rate was proportional to the film area in the quadrant-coverage cases, but had a weak dependence on the coverage area in the striped-coverage cases. For the same film coverage area, striped coverage provided better heat removal than quadrant coverage.
- The heat removal rate appears to be more strongly dependent on ambient air temperature than on initial liquid film temperature.
- The heat removal rate has a relatively weak dependence on annulus air velocity, which indicates that the resistance to heat transfer on the inside of the vessel is greater than on the outside, for the conditions tested.
- For all of the wetted, large-scale tests (except the horizontal, high-velocity steam jet injection case), the highest heat fluxes occurred near the top of the dome at the elevation at which the external film was applied. Although the dome represents about 30 percent of the heat transfer surface area, approximately 40 percent of the total heat removal occurred on the dome and 60 percent on the cylindrical sidewalls.
- Injection of low-velocity steam resulted in relatively good mixing above the injection location, but stratification occurred below this location, causing air to be concentrated below the operating deck. The heat removal flux (or rate per unit area) increased as the axial steam concentration gradient was increased (by raising the injection location).
- Injection of high-velocity steam resulted in a well-mixed vessel (both above and below the operating deck).
- Injection of a light, noncondensable gas did not degrade the condensation heat transfer or affect the overall heat removal. The gas did not stratify (collect at the top of the vessel), but was well mixed above the injection location, and was eventually well mixed throughout the entire vessel.
- WCAP-14845 documents the LST scaling analysis. WCAP-14812, Revision 2, “Accident Specification and Phenomena Evaluation for the AP600 Passive Containment Cooling System,” April 1998, documents the containment PIRT. WCAP-15613, “AP1000 PIRT and Scaling Assessment,” February 2001. This evaluation demonstrated that the AP600 test program adequately covered conditions expected in the AP1000.

Water Distribution Test Program

- The water distribution tests investigated the effectiveness of the PCS to deliver a uniform water film to the outer surface of the containment vessel.
- Located at Westinghouse's Waltz Mill facility in Madison, Pennsylvania.
- The water distribution system in the AP1000 is nearly identical to the water distribution system in the AP600.
- The staff considers tests applicable to the AP1000 and the insights and data used to develop WGOTHIC models remain acceptable.

U.S.NRC
United States Nuclear Regulatory Commission
Protecting People and the Environment

284

The tests were performed on both a 1/8 sector of a full-scale AP600 containment dome and on a cap representing a section of the full-scale containment.

Test Program

- Using the PIRTs, scaling analysis, and test results the staff found that the CMT Test Program, ADS Test Program, PRHR Test Program, APEX-600 Test Program, APEX-1000 Test Program, SPES-2 Test Program, were acceptable.
- The staff independently performed both top-down and bottom up scaling analysis, and reviewed PIRT.

U.S.NRC
United States Nuclear Regulatory Commission
Protecting People and the Environment

285

Test programs for AP600 were found acceptable with provisions. Additional integral tests at APEX for AP1000 needed and were performed.

Evaluation of Vendor Testing

- With the exception of the APEX-1000 test facility, the AP1000 test program is founded on the AP600 test program that was utilized for the validation of the computer codes used for safety analyses of the AP600 design-basis events.
- The NRC staff performed a comprehensive, thorough review and evaluation of the AP600 test programs during the AP600 design certification review.

U.S.NRC
United States Nuclear Regulatory Commission
Protecting People and the Environment

286

Evaluation of Vendor Testing

- The staff review efforts focused on:
  - (1) whether these test programs are applicable to the AP1000,
  - (2) whether they cover important T-H phenomena identified in the AP1000 design,
  - (3) whether additional tests are necessary for the AP1000 design, and
  - (4) whether these additional tests are scaled appropriately and cover appropriate ranges.

U.S.NRC
United States Nuclear Regulatory Commission
Protecting People and the Environment

287

The staff review efforts focused on:

(1) whether these test programs are applicable to the AP1000,
(2) whether they cover important T-H phenomena identified in the AP1000 design,
(3) whether additional tests are necessary for the AP1000 design, and
(4) whether these additional tests are scaled appropriately and cover appropriate ranges.

Separate PIRTs for LBLOCAs, SBLOCAs, and non-LOCA transients for the AP1000 design, with comparisons to the AP600 PIRTs.

Overall, based on the above, the staff concludes that the AP600 and AP1000 PIRTs for LBLOCA, SGTR, and non-LOCA transients are very similar, and no new “high” ranked phenomena are expected.

SER Evaluation Findings

- ADS test program is applicable to AP1000 design.
- PRHR HX model adequately predicts PRHR HX behavior.
- APEX-600 test program generally applicable to the AP1000 design.
- The staff also found that the APEX-600 test data were inadequate for use in the AP1000 code validation during reflood.
- Westinghouse conducted the APEX-1000 integral test program.

U.S.NRC
United States Nuclear Regulatory Commission
Protecting People and the Environment

288

The staff evaluated the ADS test program during the AP600 design certification review. For the AP1000 design certification, the staff also evaluated its applicability to the AP1000 design. Based on its evaluation, the staff concluded that tests performed to investigate ADS-1/2/3 valve performance for the AP600 design, are appropriate to represent conditions in the AP1000 design.

The staff concluded that the PRHR HX model does an adequate job of predicting PRHR HX tube and outlet temperatures, and that the applicant had demonstrated the adequacy of the straight-tube-based correlations for analysis of the C-tube PRHR HX and concluded that no additional PRHR separate-effects testing is needed for the AP1000.

The staff evaluated the OSU APEX-600 test program during the AP600 design certification review. For the AP1000 design certification, the staff also evaluated the applicability of the APEX-600 test program to the AP1000 design. The staff determined that the APEX-600 facility is generally appropriately scaled for the AP1000 design, and is acceptable for the AP1000 code validation for the periods of the IRWST injection/drain phase and the IRWST/sump injection phase of a transient.

However, the staff also found that the APEX-600 test data were inadequate for use in the AP1000 code validation in the areas of liquid entrainment in the upper plenum and hot-legs, and core liquid level swell, and that additional test data were needed for the AP1000. As a result, Westinghouse conducted the APEX-1000 integral test program.

SER Evaluation Findings (cont'd)

- The staff evaluated the applicability of the SPES-2 test program to the AP1000 design. The staff concluded that code validation on the basis of the SPES facility is acceptable for the AP1000 design for a small-break LOCA during blowdown.
- The LST is only valid for steady-state conditions. The LST supports the mass and heat transfer correlations used in the WGOTHIC code for the AP1000 designs.

U.S.NRC
United States Nuclear Regulatory Commission
Protecting People and the Environment

289

The staff evaluated the SPES-2 test program during the AP600 design certification review. For the AP1000 design certification, the staff evaluated the applicability of the SPES-2 test program to the AP1000 design. The staff's scaling assessment, concludes that code validation on the basis of the SPES facility is acceptable for the AP1000 design for a small-break LOCA in the subcooled blowdown phase, intermediate ADS-1/2/3 blowdown phase, and the high pressure phase of ADS-4 blowdown.

The staff found the Large-Scale Passive Containment Cooling System Test Program, was not properly scaled for transient situations. The LST is only valid for steady-state conditions. Under such conditions, the LST does support the mass and heat transfer correlations used in the WGOTHIC code for the AP600 and AP1000 designs. Therefore, the staff considers these tests to be applicable to the AP1000 and the insights and data used to develop WGOTHIC models remain acceptable.

The water distribution system in the AP1000 is nearly identical to the water distribution system in the AP600. The AP1000 flow capacity is larger to accommodate the increase in the plant power.

AP1000 features do not change the phenomena studied by the test program Therefore, the staff considers these tests to be applicable to the AP1000 and the insights and data used to develop WGOTHIC models remain acceptable.

SER Testing Approval Basis

- The three requirements for design certification testing and analysis programs:
  - (1) performance of each safety feature,
  - (2) acceptability of effects of systems interactions, and
  - (3) existence of an adequate database for code validation.
- W completed a test and analysis program to address each of these requirements.
- The staff concludes that the requirements of 10 CFR 52.47(b)(2) have been met.

U.S.NRC
United States Nuclear Regulatory Commission
Protecting People and the Environment

290

Separate-effects tests address the performance of AP1000 safety systems, including CMTs, ADS, and PRHR. Integral systems tests produce data on performance of these safety systems, with the addition of both accumulator (compressed-gas driven) injection and gravity-drain safety injection from the CMTs and IRWST.

The integral systems tests also produced data on the effects of systems interactions. Demonstration of the existence of an adequate database for code validation was the objective of the effort and has been verified by the staff.

The staff has concluded that the individual test programs are acceptable for the AP1000 design.

Accordingly, for test facility designs, instrumentation, scaling, and test matrices in the applicant's testing and analysis programs.

Assessment of Analysis Codes

- Computer codes for use in performing AP1000 design-basis safety analyses.
  - LOFTRAN/LOFTTR2, for non-LOCA transients, such as SGTRs and MSLBs.
  - NOTRUMP, for small-break LOCAs.
  - WCOBRA/TRAC, for large-break LOCAs.
  - WCOBRA/TRAC, for long-term cooling analysis.
  - WGOTHIC, for containment systems performance analysis.

U.S.NRC
United States Nuclear Regulatory Commission
Protecting People and the Environment

291

These codes are used in the accident analysis previously described in earlier modules, covering SER Section 15.

Assessment of Analysis Codes LOFTRAN/LOFTTR2

- LOFTRAN/LOFTTR2 Computer Code for non-LOCA Transients.
- LOFTRAN simulates primary system and steam generators.
- Modified for mechanistic SGTR analysis.
- Modified for AP600 to model:
  - ADS
  - CMT
  - PRHR HX
  - IRWST
- Staff concluded that LOFTRAN had been modified to include the necessary models behavior expected during non-LOCA transients and is acceptable for licensing calculations of the AP1000.

U.S.NRC
United States Nuclear Regulatory Commission
Protecting People and the Environment

292

LOFTRAN simulates a multi-loop reactor system by modeling the reactor core and vessel, hot and cold-leg piping, SG tube and shell sides, pressurizer, and RCPs, with up to four coolant loops. The pressurizer model includes the effects of pressurizer heaters, spray, operation, and relief and safety valve operation.

WCAP-7907-P-A, “LOFTRAN Code Description,” April 1984 acceptable for analysis of transients and accidents. The SGTR version of LOFTRAN, WCAP-10698-P-A, “SGTR Analysis Methodology to Determine the Margin to Steam Generator Overfill,” August 1985; WCAP-10698-P-A, “Evaluation of Offsite Radiation Doses for a Steam Generator Tube Rupture Accident,” Supplement 1, issued March 1986; and WCAP-11002, “Evaluation of Steam Generator Overfill Due to a Steam Generator Tube Rupture Accident,” February 1986.

Modifications were made to LOFTRAN to model the AP600. WCAP-14234, “LOFTRAN & LOFTTR2 AP600 Code Applicability Document,” Revision 1, June 1997, and WCAP-14307, “AP600 LOFTRAN-AP and LOFTTR2-AP Final Verification and Validation Report,” Revision 1, issued August 1997. The LOFTRAN code was modified adding the capability to model:

- ADS,
- CMT,
- PRHR HX,
- IRWST.

The staff concluded that LOFTRAN had been modified to include the necessary models for the AP600 plant features and the behavior expected during non-LOCA transients and, therefore, is applicable to the AP600 reactor design. The NRC staff concludes that the Westinghouse’s use of LOFTRAN as described in WCAP-15612, WCAP-15613, and WCAP-15644 is acceptable for licensing calculations of the AP1000.

After reviewing the LOFTRAN code for the AP600 application, the staff concluded that LOFTRAN had been modified to include the necessary models for the AP600 plant features and the behavior expected during non-LOCA transients and, therefore, is applicable to the AP600 reactor design. The NRC staff concludes that the Westinghouse’s use of LOFTRAN as described in WCAP-15612, WCAP-15613, and WCAP-15644 is acceptable for licensing calculations of the AP1000 subject to the following limitation.

Assessment of Analysis Codes NOTRUMP

- NOTRUMP A Nodal Transient Small-Break and General Network Code."
- NOTRUMP approved for AP600.
- PIRT for SBLOCA at the AP1000 and an AP1000 scaling assessment.
- The APEX-1000 tests confirm significant entrainment and carryover of water during and after ADS-4 actuation.

U.S.NRC
United States Nuclear Regulatory Commission
Protecting People and the Environment

293

WCAP-10079-P-A, "NOTRUMP A Nodal Transient Small-Break and General Network Code," August 1985.

NOTRUMP approved for AP600.

Use of NOTRUMP for the AP1000 SBLOCA evaluations is described in WCAP-15612 and WCAP-15644.

In WCAP-15613 Westinghouse provided a PIRT for an SBLOCA at the AP1000 and an AP1000 scaling assessment of the tests that were used to qualify NOTRUMP for the AP600.

The APEX-1000 tests confirm significant entrainment and carryover of water during and after ADS-4 actuation.

Assessment of Analysis Codes NOTRUMP

- Staff requested that Westinghouse perform bounding calculations for the DEDVI line breaks.
- No core uncovery or cladding heatup was observed in the APEX-1000 design-basis tests.
- No core uncovery or cladding heatup predicted with NOTRUMP.
- Independent analysis with RELAP-5.
- Model and sensitivity studies designated Tier 2*.

U.S.NRC
United States Nuclear Regulatory Commission
Protecting People and the Environment

294

As a result, the staff requested Westinghouse to perform bounding calculations for the DEDVI line breaks by maximizing entrainment, assuming homogeneous flow in the upper plenum and hot-leg regions as a part of the SBLOCA evaluation model.

No core uncovery or cladding heatup was observed in the APEX-1000 design-basis tests, although the tests do indicate less margin to uncovery and heat up than in corresponding APEX-600 tests.

No core uncovery or cladding heatup predicted with NOTRUMP.

Independent analysis with RELAP-5.

Model and sensitivity studies designated as Tier 2*.

Assessment of Analysis Codes WCOBRA/TRAC for LBLOCA

- WCOBRA/TRAC applicability to the AP1000 BE LBLOCA analyses is based on:
  - approved for AP600,
  - analyses of the impact of behavior of the passive cooling features on the peak cladding temperature (PCT), and
  - the results of the review of related PIRT, which indicate that there are only minor differences in the expected response to a BE LBLOCA.

U.S.NRC
United States Nuclear Regulatory Commission
Protecting People and the Environment

295

1) The NRC's approval of WCOBRA/TRAC for use in analyzing LBLOCAs for the AP600 and three- and four loop Westinghouse plants.

(2) Analyses regarding the impact of behavior of the AP600 and AP1000 passive cooling features on the peak cladding temperature (PCT).

(3) The results of the review of related PIRT tables, which indicate that there are only minor differences in the expected response to a BE LBLOCA between the AP1000, AP600, and Westinghouse three and four-loop plants.

Assessment of Analysis Codes WCOBRA/TRAC for LBLOCA

- AP1000 differs from the AP600 by having a higher power density, increased core height, increased diameter of the ADS-4 valves and the associated piping, and increased diameter of the injection pipes.

- The increased power density would increase the steaming rate after blowdown. The increased fuel element height will increase the time to reflood. The increased size of the ADS-4 valves compensates. Likewise, the increased injection pipe diameter will offset the delay in reflood time due to increased core height.

U.S.NRC
United States Nuclear Regulatory Commission
Protecting People and the Environment

296

In the context of the LBLOCA, the AP1000 differs from the AP600 by having a higher power density, increased core height, increased diameter of the ADS-4 valves and the associated piping, and increased diameter of the injection pipes. The increased power density would increase the steaming rate after blowdown which, in turn, will increase the pressure drop through the ADS-4 valves. This could decrease the injection rate and delay the initiation of the IRWST injection. Likewise, the increased fuel element height will increase the time to reflood. However, the increased size of the ADS-4 valves and related piping will lower the depressurization flow resistance, offsetting the increased steaming rate. Likewise, the increased injection pipe diameter will offset the delay in reflood time due to increased core height. In summary, the increased pipe size will maintain core cooling during IRWST injection and sump recirculation.

The staff agrees with the Westinghouse's positions that the AP600 and AP1000 PIRTs for BE LBLOCA, SGTR, and non-LOCA transients are very similar, and no new "high" ranked phenomena are expected. The minor changes in "low" and "medium" ranked processes are expected and considered appropriate.

Assessment of Analysis Codes WCOBRA/TRAC for LBLOCA

- Expert review of the AP600 BE LBLOCA PIRT, stated that "the new and additional passive systems, which have been added to the AP600 (CMTs, IRWST, ADS), do not contribute to the core cooling in the short term, nor do they influence the calculated PCT for the BE LBLOCA transient. The conclusions reached for AP600 are valid for the AP1000.

U.S.NRC
United States Nuclear Regulatory Commission
Protecting People and the Environment

297

LBLOCA has phases of blowdown, refill, and reflood. Blowdown unaffected. Refill and reflood used accumulators.

Staff concluded that comparison of the AP1000 and AP600 LBLOCA PIRTs demonstrates that there are no significant differences regarding the phenomena and plant response to LBLOCAs. Therefore, because the AP1000 response to a LBLOCA is very similar to that of the three- and four-loop plants, because WCOBRA/TRAC was found acceptable for the BE LBLOCA analysis of the AP600 (including the effect of the DVI line), and because the PIRTs revealed no significant differences between the AP1000, the AP600, and the three- and four-loop Westinghouse plants, the staff concluded that WCOBRA/TRAC is acceptable for the analyses of AP1000 BE LBLOCA.

As described in WCAP-14727, Revision 2, "AP600 Scaling and PIRT Closure Report," expert review of the AP600 BE LBLOCA PIRT, compared to that of the three- and four-loop plants, stated that "the new and additional passive systems, which have been added to the AP600 (CMTs, IRWST, ADS), do not contribute to the core cooling in the short term, nor do they influence the calculated PCT for the BE LBLOCA transient. The PRHR can condense steam, which will enhance the AP600 reflood for some time period; however, it is not essential to an acceptable calculation of the PCT. The effect of the downcomer injection location for the AP600 has been addressed with specific additional code validation, which is contained in the WCOBRA/TRAC code applicability document." Since the PIRTs for the BELOCA, the SGTR, and non-LOCA transients are very similar for both the AP600 and AP1000, the conclusions reached in the AP600 are valid for the AP1000.

Assessment of Analysis Codes WCOBRA/TRAC for Long-Term Cooling

- The LTC phase of a LOCA initiates with steady-state flow into the reactor vessel from the IRWST.
- Acceptability of WCOBRA/TRAC for the AP1000 LTC analyses is based on the staff's previous finding for the AP600; review of the validation data and the results of comparative study of the AP600 and AP1000 PIRT.

U.S.NRC
United States Nuclear Regulatory Commission
Protecting People and the Environment

298

The LTC phase of a LOCA initiates with the establishment of steady-state flow into the reactor vessel from the IRWST through either one or both of the DVI lines. As the IRWST empties, the water level in the sump rises, and the source of vessel injection flow switches to the containment sump. Unlike conventional operating reactors, the AP1000 long-term cooling process does not use pumps. The reactor coolant water boil-off in the core is condensed in the containment. The condensate is returned by gravity to the IRWST (or containment sump), and the heat is transferred to the environment through the containment shell. The coolant is returned to the IRWST and enters the reactor vessel through the DVI lines by gravity. For DVI line break cases, sump water also enters into the vessel through the break. These systems are designed to provide adequate reactor cooling for an extended period of time without outside intervention or a supply of power.

Assessment of Analysis Codes WGOTHIC for Containment DBA Analysis

- WGOTHIC is used for the licensing analysis of containment pressure transients.
- GOTHIC program adopted to model the PCS. The staff limited it's review to the use of WGOTHIC in the Westinghouse EM to evaluate containment performance.
- PIRT, a scaling analysis, and separate and integral tests.
- The staff determined that the WGOTHIC computer program, combined with the conservatively biased evaluation model, was acceptable.

U.S.NRC
United States Nuclear Regulatory Commission
Protecting People and the Environment

299

WGOTHIC is a thermal-hydraulic computer program used for the design-basis licensing analysis of the AP600 and AP1000 passive containment designs. The WGOTHIC computer program is used to conservatively calculate the containment thermal hydraulic response to mass, momentum, and energy releases from postulated pipe break scenarios (e.g., design-basis LOCAs and MSLBs). Westinghouse uses WGOTHIC in a lumped parameter fashion to evaluate the pressure and temperature response of the passive containment to design-basis accidents (DBAs).

Westinghouse devised a program plan which included a number of elements to address the PCS concept. A series of studies, including a PIRT, a scaling analysis, and both separate and integral tests to obtain the information needed to develop models for use in WGOTHIC to evaluate the containment performance during DBAs, where carried out.

Water distribution tests were conducted to determine the PCS water coverage fraction on the containment dome and cylindrical shell as a function of the PCS water flow rate: WCAP-13353, "Passive Containment Cooling System Water Distribution, Phase 1 Test Data Report," WCAP-13296, "PCS Water Distribution Test Phase II Report," and WCAP-13960, "PCS Water Distribution Phase 3 Test Data Report."

- Separate effects studies were performed: WCAP-12665, April 1992, Westinghouse Electric Corporation, "Tests of Heat Transfer and Water Film Evaporation on a Heated Plate Simulating Cooling of the AP600 Reactor Containment."
- Small scale integral (SST) tests were performed: WCAP-14134, "AP600 Passive Containment Cooling System Integral Small-Scale Tests Final Report," Westinghouse Electric Corporation, August 1994.
- Large scale integral (LST) tests were performed: WCAP-14135, "Final Data Report for PCS Large-Scale Tests, Phase 2 and Phase 3," Revision 1, April 1997.
- The heat and mass transfer correlation package, used in WGOTHIC to evaluate the PCS performance, was validated: WCAP-14326, "Experimental Basis for the AP600 Containment Vessel Heat and Mass Transfer Correlations," Revision 2, April 1998.
- The development and validation of the lumped-parameter model for use in WGOTHIC: WCAP-14382, "WGOTHIC Code Description and Validation," dated May 1995.

The bounding AP600 evaluation model (EM) development, the analytical model development for the AP600 and the PCS specific features, and the validation of the WGOTHIC AP600 EM through sensitivity studies were presented in WCAP-14407, "WGOTHIC Application to AP600," Revision 3, dated April 1998.

WGOTHIC Application for the AP1000
Westinghouse requested a pre-certification review for the AP1000 design to evaluate the applicability of the use of the AP600 computer programs and test databases used to support these programs for the AP600 standard plant design.

"AP1000 Plant Description & Analysis Report," WCAP-15612, December 2000.
"AP1000 PIRT and Scaling Assessment," WCAP-15613, February 2001.
"AP1000 Code Applicability Report," WCAP-15644, April 27, 2001.

Staff agreed with PIRT conclusions that the differences between the AP600 and the AP1000 do not change the ranking of the phenomena, that no new phenomena have been identified, and that the models for the AP600 remain applicable for the AP1000.
Staff agreed that the mass and heat transfer correlations are acceptable for the evaluation of the AP1000 and that the AP600 test program adequately covers the expected ranges for which these correlations are used.

Assessment of Analysis Codes SER Evaluation Findings

- LOFTRAN
  - NRC staff concludes that the Westinghouse's use of LOFTRAN is acceptable for licensing calculations of the AP1000 .
- NOTRUMP
  - NRC staff concludes that the NOTRUMP code, when augmented with the bounding calculations is an acceptable methodology for performing SBLOCA analysis for the AP1000.
- WCOBRA/TRAC for Large-Break LOCA Analyses
  - AP1000 response to a LBLOCA is very similar to that of the three- and four-loop plants, because WCOBRA/TRAC was found acceptable for the BE LBLOCA analysis of the AP600 (including the effect of the DVI line), and because the PIRTs revealed no significant differences between the AP1000, the AP600, and the three- and four-loop Westinghouse plants, the staff concluded that WCOBRA/TRAC is acceptable for the analyses of AP1000 BE LBLOCA.

U.S.NRC
United States Nuclear Regulatory Commission
Protecting People and the Environment

300

This slide provides a summary of conclusion states throughout the presentation.

Assessment of Analysis Codes SER Evaluation Findings

- WCOBRA/TRAC for Long-Term Cooling
  - WCOBRA/TRAC has been reviewed for application to the AP600 and was found acceptable. PIRT studies showed that there are no new phenomena in AP1000 LTC that would call for new or additional validation. Accordingly, the staff concludes that the use of WCOBRA/TRAC is acceptable for the LTC analyses of AP1000.
- WGOTHIC Computer Program for Containment DBA Analysis
  - Based on the staff's review of the Westinghouse program, the staff determined that the WGOTHIC computer program, combined with the conservatively biased evaluation model, was acceptable for the evaluation of the peak containment pressure following a design basic accident.

U.S.NRC
United States Nuclear Regulatory Commission
Protecting People and the Environment

301

This slide provides a summary of conclusion states throughout the presentation.

AP1000 Radioactive Waste Management

Module 11

SER Sections 11.1 – 11.5

INSTRUCTOR: J. Stewart Bland

October 2008

U.S.NRC
United States Nuclear Regulatory Commission
Protecting People and the Environment

302

Learning Objectives

- Class Participants are expected to understand:
  - The NRC criteria and review approach for the radiation protection activities described by this DCD.
  - How the AP1000 addresses the SRP Acceptance Criteria.
  - Significant NRC questions/RAIs.
  - SER evaluation findings.
  - COL items from each applicant.

U.S.NRC
United States Nuclear Regulatory Commission
Protecting People and the Environment

303

Scope of Review

Requirements and reviews associated with:

- Source terms (normal and accident).
- Systems designed to collect and manage:
  - Liquid waste.
  - Gaseous waste.
  - Solid waste.
- Sampling systems to monitor and control effluent releases.

U.S.NRC
United States Nuclear Regulatory Commission
Protecting People and the Environment

304

SRP Acceptance Criteria

- Acceptance criteria are based upon NRC criteria specified in:
  - 10 CFR 20 - Standards for protection against radiation.
  - 10 CFR 50 - Domestic licensing of production and utilization facilities.
  - 10 CFR 61 - Licensing requirements for land disposal of radioactive waste.
  - 10 CFR 71 - Packaging and transportation of radioactive material.

U.S.NRC
United States Nuclear Regulatory Commission
Protecting People and the Environment

305

10 CFR 61 – relates to classifying, processing, and disposing of solid wastes.

10 CFR 71 – relates to packaging of radioactive materials.

Specifics of Acceptance Criteria

- 10 CFR 20:
  - Limits on doses for persons in unrestricted areas.
  - Design and operational procedures to minimize contamination.

U.S.NRC
United States Nuclear Regulatory Commission
Protecting People and the Environment

306

- 10 CFR 20.1302 and 10 CFR 20.1301(e), as they relate to the monitoring of radioactivity in plant radiological effluents to unrestricted areas.
- 10 CFR 20.1406, as it relates to the design and operational procedures in minimizing contamination, facilitating eventual decommissioning, and minimizing the generation of radioactive waste.

Part 50 and GDC Criteria

- Appendix I - ALARA in reactor effluents.
- GDC 3 – Protecting Gaseous Waste Handling Systems from Explosive Mixtures.
- GDC 60 – Releases to the environment.
- GDC 61 – Safety under normal and postulated accident conditions.
- GDC 63/64 – Design of radioactive management systems to monitor radiation levels and leakage.

U.S.NRC
United States Nuclear Regulatory Commission
Protecting People and the Environment

307

- 10 CFR 50.34a, as it relates to equipment design and procedures used to control releases of radioactive material to the environment within the numerical guidance provided in Appendix I to 10 CFR Part 50.
- 10 CFR 50.36a, as it relates to operating procedures and equipment installed in the radioactive waste system pursuant to 10 CFR 50.34a to ensure that releases of radioactive materials to unrestricted areas are kept ALARA.
- Appendix I to 10 CFR Part 50, as it relates to numerical guides for design objectives to meet the requirements of 10 CFR 50.34a and 10 CFR 50.36a, which specify that radioactive effluents released to unrestricted areas will be kept ALARA.
- *Criterion 60--Control of releases of radioactive materials to the environment*. The nuclear power unit design shall include means to suitably control the release of radioactive materials in gaseous and liquid effluents and to handle radioactive solid wastes produced during normal reactor operation, including anticipated operational occurrences. Sufficient holdup capacity shall be provided for retention of gaseous and liquid effluents containing radioactive materials, particularly where unfavorable site environmental conditions can be expected to impose unusual operational limitations upon the release of such effluents to the environment.
- *Criterion 61--Fuel storage and handling and radioactivity control*. The fuel storage and handling, radioactive waste, and other systems which may contain radioactivity, shall be designed to assure adequate safety under normal and postulated accident conditions. These systems shall be designed (1) with a capability to permit appropriate periodic inspection and testing of components important to safety, (2) with suitable shielding for radiation protection, (3) with appropriate containment, confinement, and filtering systems, (4) with a residual heat removal capability having reliability and testability that reflects the importance to safety of decay heat and other residual heat removal, and (5) to prevent significant reduction in fuel storage coolant inventory under accident conditions.
- *Criterion 63--Monitoring fuel and waste storage*. Appropriate systems shall be provided in fuel storage and radioactive waste systems and associated handling areas (1) to detect conditions that may result in loss of residual heat removal capability and excessive radiation levels and (2) to initiate appropriate safety actions.
- *Criterion 64--Monitoring radioactivity releases*. Means shall be provided for monitoring the reactor containment atmosphere, spaces containing components for recirculation of loss-of-coolant accident fluids, effluent discharge paths, and the plant environs for radioactivity that may be released from normal operations, including anticipated operational occurrences, and from postulated accidents.

Regulatory Guide Criteria

- RG 8.8 Information Relevant to Ensuring that Occupational Radiation Exposures – ALARA.
- RG 1.110 Cost-Benefit Analysis for Radioactive Management Systems and Equipment.
- RG 1.112 Calculating Releases of Radioactive Materials in Effluents from Nuclear Power Plants.
- RG 1.140 Design, Testing, and Maintenance of Normal Ventilation Systems.

U.S.NRC
United States Nuclear Regulatory Commission
Protecting People and the Environment

Regulatory Guide Criteria (cont.)

- RG 1.143 Seismic Design and Quality Group Classification of Components and the Structures Housing the WSS, as well as the Provisions to Control Leakage.

U.S.NRC
United States Nuclear Regulatory Commission
Protecting People and the Environment

NUREG-0737 Criteria

- Item II.B.2 provides guidance on how to meet 10 CFR 50.34(f)(2)(vii).
  - Describes source terms used for post-accident conditions.

U.S.NRC
United States Nuclear Regulatory Commission
Protecting People and the Environment

310

Part 50.34 – "Perform radiation and shielding design reviews of spaces around systems that may, as a result of an accident, contain accident source term radioactive materials, and design as necessary to permit adequate access to important areas and to protect safety equipment from the radiation environment (II.B.2)."

AP1000 DCD Content

1. Source terms:
   - Parameters used to calculate DB fission product activities.
   - Parameters used for PWR-GALE code.
   - Equipment decontamination factors.
   - Airborne release concentrations.

U.S.NRC
United States Nuclear Regulatory Commission
Protecting People and the Environment

311

The staff's review of the radioactive source terms include considerations of parameters used to determine the concentration of each isotope in the reactor coolant; fraction of fission product activity released to the reactor coolant; and concentrations of all non-fission product radioactive isotopes in the reactor coolant. The following sources are considered in the evaluation of effluent releases:

- Pressurized water reactor (PWR) gaseous wastes (noble gases, radio iodine, particulates, carbon-14 and tritium), consisting of offgases from the steam generator blowdown flash tank; offgases from the main condenser evacuation system; leakage to containment, fuel handling, auxiliary, and turbine buildings.
- Noble gases stripped from the primary coolant during normal operation and at shutdown; and cover and vent gases from tanks and equipment containing radioactive material.
- PWR liquid wastes, consisting of primary coolant processed to control boron concentration (shim bleed); leakage collected in equipment and floor drains from buildings housing equipment and components that may contain radioactive fluids; steam generator blowdown; condensate demineralizer regenerant solutions; contaminated liquids from anticipated plant operations such as resin sluices, filter backwashes, decontamination solutions, and sample station drains; and detergent wastes.

DCD Content (cont.)

2. Liquid waste systems:
   - Describes the systems designed to control, collect, process, store and dispose of liquid waste.
3. Gaseous waste systems:
   - Describes the systems designed to collect, process, store and dispose of gaseous waste.

U.S.NRC
United States Nuclear Regulatory Commission
Protecting People and the Environment

312

Liquid Waste –

- The liquid waste management system (LWMS) is designed to ensure that liquids and liquid wastes produced during normal operation, including anticipated operational occurrences, are handled, processed, stored, and released or routed to their final destination in accordance with the relevant regulations of the NRC.
- Review of the LWMS includes the design features that are necessary for collecting, handling, processing, releasing, and disposing of liquid effluents. This review encompasses, but is not limited to, piping, pumps, valves, filters, demineralizers, mobile equipment connected to permanently installed systems, and any additional equipment that may be necessary to process and treat liquid wastes and route them to the point of discharge from the system.
- The review of the LWMS includes the design, design objectives, design criteria, methods of treatment, expected releases, and calculation methods and principal parameters used in calculating effluent source terms and releases of radioactive materials in liquid effluents, including system piping and instrumentation diagrams (P&IDs) and process flow diagrams showing methods of operation and factors that influence waste treatment, e.g., system interfaces and potential bypass routes to non-radioactive systems.

Gaseous system - The gaseous waste management system (GWMS) involves the gaseous radwaste system (GRS), which deals with the management of radioactive gases collected in the offgas system (this system contains charcoal delay beds) or the waste gas storage and decay tanks. In addition, it involves the management of a condenser air removal system, steam generator blowdown flash tank (if applicable), and containment purge exhausts for PWRs; hydrogen and oxygen recombiners and instrumentation to control hydrogen and oxygen levels; and building ventilation system exhausts for PWRs. The management for gaseous effluents to the environment from the above sources may, in turn, involve the use of mobile equipment connected to permanently installed systems to reduce releases of radioactive materials in effluents from the above sources. The review of the GWMS includes the design, design objectives, design criteria, methods of treatment, expected releases, and methods and principal parameters used in calculating effluent source terms and releases of radioactive materials (noble gases, radioiodines, tritium, carbon-14, and particulates). The review will include system piping and instrumentation diagrams (P&IDs) and process flow diagrams showing methods of operation and factors that influence waste treatment (e.g., system interfaces and potential bypass routes to nonradioactive systems).

DCD Content (cont.)

4. Solid waste management:
   - Equipment and instrumentation to collect, segregate, store, process, sample and monitor solid wastes.
5. Process and effluent system:
   - Describes the sampling system used to measure, record and control releases of radioactive materials in plant process and effluent streams.

U.S.NRC
United States Nuclear Regulatory Commission
Protecting People and the Environment

313

Solid Waste - The solid waste management system (SWMS) manages radioactive wastes, as liquid, wet, and dry solid wastes, produced during normal operation and anticipated operational occurrences. Review of the SWMS includes design features that are necessary for collecting, handling, processing, and storing wastes. This encompasses the design, design objectives, design criteria, treatment methods, and expected releases, including the description of The SWMS, mobile equipment connected to permanently installed systems, piping and instrumentation diagrams (P&IDs), process and effluent radiation monitoring and control instrumentation, and process flow diagrams showing the operational methods and factors that influence waste treatment.

The review includes an evaluation of any additional equipment that may be necessary to process liquid, dry, and wet wastes and route them to the point of discharge from the SWMS or to prepare them for shipment to authorized offsite disposal sites or licensed radioactive waste processors.

The topics addressed in Item 5, *Process and Effluent Radiological Monitoring and Sampling System*, include the following:

- safety design basis,
- power generation design basis,
- individual monitor descriptions, (e.g., plant vent radiation monitor),
- in-service inspection,
- calibration, and maintenance,
- effluent monitoring and sampling,
- process and airborne monitoring and sampling,
- post-accident radiation monitoring,
- area radiation monitors,
- fuel handling area,
- criticality monitors,
- quality assurance,
- tables and figures with detector and monitor parameters and diagrams.

DCD Content (cont.)

- **Tier 1 information**
  - Section 3.5, Radiation Monitoring
    - Contains design description.
    - Contains tables of equipment classifications.
    - Contains table of Inspections, Tests, Analyses, and Acceptance Criteria (ITAACs).

U.S.NRC
United States Nuclear Regulatory Commission
Protecting People and the Environment

314

Section 3.5, *Radiation Monitoring,* provides the following: design description, tables containing seismic Category I equipment, tables containing Class 1E equipment, tables of the process, effluent, airborne, and area radiation monitors, and Table 3.5-6, *Inspections, Tests, Analyses, and Acceptance Criteria (ITAACs)*.

Significant RAIs

- 460.002 – Demonstrate that the AP I000 design meets the criteria listed in SRP Section 11.1, Paragraph II, "Acceptance Criteria."
- Response - Westinghouse either provided locations in the document where the information was found or provided a reference.

U.S.NRC
United States Nuclear Regulatory Commission
Protecting People and the Environment

315

460.002
Question:
(Section 11.1) Demonstrate that the API 000 design meets the following criteria listed in SRP Section 11.1, Paragraph II, "Acceptance Criteria." Please identify where each of the following criteria are addressed in the DCD. If any criteria is not addressed, please provide that information and revise the DCD accordingly. Providing a table that identifies the applicable criteria and DCD section would be adequate.

A. The parameters used to calculate primary and secondary coolant concentrations are consistent with those given in NUREG-0017, "Calculation of Releases of Radioactive Materials in Liquid and Gaseous Effluents from Pressurized Water Reactors."
B. All normal and potential sources of radioactive effluent delineated in Subsection I of SRP Section 11.1 are considered.
C. For each source of liquid and gaseous waste considered in subsection 1.1 of SRP 11.1, the volumes and concentrations of radioactive material given for normal operation and anticipated operational occurrences are consistent with those given in NUREG-0017.
D. Decontamination factors for in-plant control measures used to reduce gaseous effluent releases to the environment, such as iodine removal systems and high-efficiency particulate air (HEPA) filters for building ventilation exhaust systems and containment internal cleanup systems are consistent with those given in RG 1.140. The building mixing efficiency for containment internal cleanup is consistent with NUREG-0017.
E. Decontamination factors for in-plant control measures used to reduce liquid effluent releases to the environment, such as filters, demineralizers, and evaporators are consistent with those given in NUREG-0017.
F. Radwaste augments used in the calculation of effluent releases to the environment are consistent with the findings of a cost-benefit analysis, and are performed using the guidance of RG 1.110, "Cost-Benefit Analysis for Radwaste Systems for Light-Water-Cooled Nuclear Power Plants." The provisions that require a cost-benefit analysis are stated in Section II.D of Appendix I to 10 CFR Part 50.
G. Effluent concentration limits at the boundary of the unrestricted area do not exceed the values specified in Table 2 of Appendix B to 10 CFR Part 20.
H. The source terms result in meeting the design objectives for doses in an unrestricted area as set forth in Appendix I to 10 CFR Part 50.
I. For evaluating the source terms, the applicant should provide the relevant information in the DCD as required by 10 CFR Part 50, Section 50.34a. This technical information should include all the basic data listed in Appendix B to RG 1.112 required in calculating the releases of radioactive material in liquid and gaseous effluents. An acceptable method for satisfying the criteria given in items 1 through 6 consists of using the Gaseous and Liquid Effluent (GALE) Computer Code and the source term parameters given in NUREG-0017.
J. If the calculation technique or any source term parameter differs from that given in NUREG-0017, please describe these differences in detail and the bases for the methods and parameters used.

Significant RAIs

- 460.004 – Provide information to demonstrate adequacy of the Liquid Waste system to handle normal inputs.
- Response – Provided information assuring high assumptions for annual volumes. The processing will require about 1 hour per day assuming a process capacity of 75 gpm.

U.S.NRC
United States Nuclear Regulatory Commission
Protecting People and the Environment

316

460.004
Question:
AP1 000 DCD, Section 11.2.1.2.1, "Capacity," states that the liquid waste system provides adequate capacity to meet the anticipated processing requirements of the plants. The tables being referenced in Section 11.2.1.2.1 do not have sufficient explanation regarding the capacity of the liquid waste system. The projected flows of various liquid waste systems under normal conditions are identified in DCD Table 11.2-1. Please provide additional information that demonstrates the adequacy of the liquid waste system to handle the normal input specified in Table 11.2-1.

DCD Table 11.2-4 contains information on the surge capacity of individual tanks. Where is the information about the surge input rates? Demonstrate the adequacy of the capacity to handle the surge input.
Revise DCD Section 11.2.1.2.1 to specifically explain the capacity of the liquid waste management system.

Significant RAIs

- 460.005(A) – Demonstrate compliance w/ BTP ETSB 11-5 with a short-term release duration.
- Response – Westinghouse details why the system can be isolated quickly and calculates a site boundary whole body dose of 0.001 Sv.

U.S.NRC
United States Nuclear Regulatory Commission
Protecting People and the Environment

317

460.005(a)
Please provide additional information addressing the following for the gaseous radwaste management systems:
A.demonstration of compliance with BTP ETSB 11.5, with a short-term (0-2 hours) release duration,

Response:
Branch Technical Position ETSB 11.5 states "radiological consequences of a single failure of an active component in a waste gas system with charcoal delay units assumes that the charcoal unit is bypassed with a 1-hour release to the environs."

In AP600 or AP1000, a failure in the Gaseous Radwaste System (WGS) could be isolated very quickly through several different means, the most direct being isolation of letdown. Therefore, although ETSB 11.5 mentions a 2 hour time interval associated with bringing an alternate charcoal unit on line or reducing reactor power, the AP1000 would be capable of stopping the bypass much more quickly, as noted below.
We have conducted an evaluation consistent with our understanding of the requirements of Branch Technical Position ETSB 11.5, which are:

- A pre-existing, beyond-design-basis condition of operation with 1% fuel defects; (that is, noble gas concentrations in the reactor coolant are assumed to be four times higher than the AP1000 design basis as shown in DCD Table 11.1-2);
- A 1-hour bypass of the WGS charcoal beds;
- 30 minutes decay prior to release to the environs; and
- The site boundary X/Q of 6.OE-4 sec/im3, consistent with the assumptions documented in DCD Chapter 5 of the Tier 1 documentation. (Note that this is different from AP600, which assumed a X/Q of 1.0E-3 sec/m3.)

With these assumptions we calculate a site boundary whole body dose of 0.1 rem.

Significant RAIs

- 460.005(B) – Discuss compliance w/ GDC-3 regarding protection of the gaseous waste system from explosive mix of H and O_2.
- Response:
  - the system operates at slightly above atmospheric pressure.
  - Redundant analyzers set at 25% of the lower flammability level.
  - Elimination of static buildup.

U.S.NRC
United States Nuclear Regulatory Commission
Protecting People and the Environment

318

460.005(b)
Question:
a discussion of compliance with GDC 3, "Fire Protection," as it relates to providing protection to gaseous waste handling and treatment systems from the effects of an explosive mixture of hydrogen and oxygen. The discussion should include the provisions incorporated in the AP1000 design to control releases due to hydrogen explosions in the gaseous waste management team. Additionally, it should include the type, number and locations of gas analyzers provided in the design of the gaseous waste management system,

Significant RAIs

- 460.005(C) – Discuss compliance w/ GDC-60 as it relates to control of releases of radioactive materials to the environment.
- Response – Westinghouse provides information on tank capacities, ventilation filtration systems, monitoring and pressures.

U.S.NRC
United States Nuclear Regulatory Commission
Protecting People and the Environment

319

460.005(c)
Question:
a discussion of compliance with GDC 60, "Control of Releases of Radioactive Materials to the Environment," as it relates to control of releases of radioactive materials to the environment. The discussion should refer to RG 1.140 and should be consistent with Acceptance Criterion 11.6.a of Section 11.3 of the SRP.

Significant RAIs

- 460.005(D) – Discuss compliance w/ GDC-61 as it relates to radioactivity control in gaseous waste management systems and ventilation systems associated with fuel storage and handling areas.
- Response – design features of the ventilation system are described by Westinghouse.

U.S.NRC
United States Nuclear Regulatory Commission
Protecting People and the Environment

320

460.005(d)
Question:
a discussion of compliance with GDC 61, "Fuel Storage and Handling and Radioactivity Control," as it relates to radioactivity control in gaseous waste management systems and ventilation systems associated with fuel storage and handling areas.

Significant RAIs

- 460.006 – Discuss specific design features provided in waste system design to comply with GDCs 60, 63, and 64.
- Response - Westinghouse described HVAC and radiation monitors within the HVAC as well as drain and floor collection systems.

U.S.NRC
United States Nuclear Regulatory Commission
Protecting People and the Environment

321

460.006
Question:
Discuss the specific design features provided in the system design to comply with GDCs 60, 63, "Monitoring Fuel and Waste Storage," and 64, "Monitoring Radioactivity Releases," as they relate to (1) Acceptance Criteria in SRP Section 11.4, Paragraph II.C, regarding control of release of radioactive materials to the environment from the plant areas where the solid radwastes are processed, and (2) Acceptance Criteria in SRP Section 11.4, Paragraph I I.D, regarding the radioactive waste system being designed for monitoring radiation levels.

Significant RAIs

- 460.007 – Demonstrate that AP1000 design has sufficient storage capacity to allow for short-lived radionuclides to decay prior to shipping.
- Response – Westinghouse describes the waste storage tanks and storage areas

U.S.NRC
United States Nuclear Regulatory Commission
Protecting People and the Environment

322

460.007
Question:
Staff guidance for the radioactive waste storage capacity that is sufficient to allow time for short-lived radionuclides to decay prior to shipping is discussed in SRP Section 11.4, Paragraphs 11.6 and 111.4, and BTP ETSB 11-3, Position B.II. Please demonstrate that the AP1000 design has such sufficient storage capacity. Clarify which generation rate (expected or maximum) is used for this demonstration. Identify the in-plant storage space (spent resin tanks, spent filter tubes,...etc.) associated with different kind of wastes (wet wastes, dry wastes,...etc.), shipment capacity, and duration for in-plant storage.

Significant RAIs

- 460.009 – Provide additional information on how large, radioactive waste material, such as core components, would be handled.
- Response – Will be handled on a specialized basis, based upon location and type of material.

U.S.NRC
United States Nuclear Regulatory Commission
Protecting People and the Environment

323

460.009
Question:
Section 11.4 of the AP1 000 DCD states that solid waste management system does not handle large, radioactive waste materials such as core components or radioactive process wastes from the plant's secondary cycle. Where are these large, radioactive waste materials handled?

Significant RAIs

- 460.010 – Demonstrate that design meets SRP 11.5, regarding provisions to be made to purge and drain sample streams back to system of origin or appropriate waste treatment system.
- Response – Sample points are described and references other locations in the DCD.

U.S.NRC
United States Nuclear Regulatory Commission
Protecting People and the Environment

324

460.010
Question:
SRP Section 11.5, Paragraph 11.2.c of the acceptance criteria states that provisions should be made to purge and drain sample streams back to the system of origin or to an appropriate waste treatment system. Please demonstrate that the AP1000 design meets this criterion.

Significant RAIs

- 460.011 – Demonstrate that design meets SRP 11.5, regarding administrative and procedural control for (1) necessary auxiliary or ancillary equipment, (2) special features for the instrumented radiological monitoring sampling, and (3) analysis of process and effluent streams.
- Response – Part of this responsibility is passed to the COL applicant. References to other sections of the DCD are made.

U.S.NRC
United States Nuclear Regulatory Commission
Protecting People and the Environment

325

460.011
Question:
SRP Section 11.5, Paragraph 11.3 of the acceptance criteria states that provisions should be made for administrative and procedural control, for necessary auxiliary or ancillary equipment, for special features for the instrumented radiological monitoring sampling, and for analysis of process and effluent streams. Please demonstrate that the AP1000 design meets this criterion.

Response:
SRP Section 11.5 Paragraph 11.3 cites Regulatory Guides 1.21 and 4.15. As noted in DCD Tier 2 Chapter 1 Appendix A, conformance with Regulatory Guide 1.21 Sections C.1 and C.3 through C.14 is the responsibility of the Combined License applicant. Item C.2 gives requirements for locations of radiation monitors. AP1000 complies with this requirement, as demonstrated by the DCD Sections 9.3.3 and 11.5, particularly tables 9.3.3-1 and 9.3.3-2 (which list plant sample points) and tables 11.5-1 and 11.5-2 (which list radiation monitoring points). All major and potentially significant paths for release of radioactivity are monitored.

Regulatory Guide 4.15 provides guidance for quality assurance for radiation monitoring programs. As noted in DCD section 11.5.7, conformance with this Guide is the responsibility of the Combined License applicant.

SER Evaluation Findings

- Source terms:
  - Calculation of source terms consistent with NUREG-0017.
  - Assumption of design-basis 0.25% fuel defect level versus 1.0% was determined to be acceptable.

U.S.NRC
United States Nuclear Regulatory Commission
Protecting People and the Environment

326

- Describes the sources of radioactivity that are generated within the core and have the potential of leaking to the reactor coolant system (RCS) during normal plant operation, including AOOs, by way of defects in the fuel cladding.
- Two source terms are presented for the primary and secondary coolant.
  - The first is the design-basis source term, which assumes a design-basis fuel defect level of 0.25 percent. Reactor coolant activity is determined based on time-dependent fission product core inventories that are calculated by the ORIGEN code. The first source term serves as a basis for radwaste system design and shielding requirements.
  - The second source term is a realistic model which represents the expected average concentrations of radionuclides in the primary and the secondary coolant. These values are determined using the model in ANSI-18.1 and the PWR-GALE code (NUREG-0017, Revision 1). The realistic source term provides the bases for estimating typical concentrations of the principal radionuclides, as listed in DCD Tier 2, Table 11.1-8. This source term model reflects the industry experience at a large number of operating PWR plants.

SER Evaluation Findings (cont.)

- Liquid waste systems:
  - Annual average concentrations will not exceed the values in Part 20, App B, Table 2, Column 2.
  - Sufficient design information has been provided to demonstrate that design objectives have been met.
  - Control releases of liquid effluents by monitoring releases which satisfies GDC 60 requirements.
  - GDC 61 requirements satisfied by meeting guidelines of RG 1.143 and RG 1.110.

U.S.NRC
United States Nuclear Regulatory Commission
Protecting People and the Environment

327

The AP1000 design has met the dose requirements of 10 CFR 20.1302 by assuring that the annual average concentration of radioactive materials in liquid effluents released into an unrestricted area will not exceed the limits specified in 10 CFR Part 20, Appendix B, Table 2, Column 2.

- The AP1000 design has demonstrate compliance with 10 CFR 50.34a, as it relates to sufficient design information being provided, as set forth in the above discussion.
- A COL applicant referencing the AP1000 certified design will demonstrate compliance with 10 CFR Part 50, Appendix I, requirements for offsite individual doses and population doses resulting from liquid effluents by preparing a site-specific cost-benefit analysis in accordance with RG 1.110 (COL Action Item 11.2-2).
- The AP1000 design has met the requirements of GDC 60 with respect to controlling releases of liquid effluents by radiation monitoring of the WLS releases. All WLS releases are monitored by a radiation monitor, which will generate a signal to terminate liquid radwaste releases before the discharge concentration exceeds a predetermined set point. A COL applicant will identify the operational setpoint for its WLS radiation monitors in its plant-specific ODCM (COL Action Item 11.5-1).
- Compliance with the requirements of GDC 61 is demonstrated by meeting the guidelines of RG 1.143 and RG 1.110 (COL Action Item 17.5-1).

SER Evaluation Findings (cont.)

- Gaseous waste systems:
  - Maintain effluents below limits during leakage at design levels for the fuel.
  - In accordance with GDC 60, control release of radioactive material into environs.
  - Provide radioactivity control in WGS and ventilation systems for fuel storage and handling areas which satisfies GDC 61 requirements.
  - Protect from explosive mixtures of H and O_2.

U.S.NRC
United States Nuclear Regulatory Commission
Protecting People and the Environment

328

- The system is capable of maintaining gaseous effluents in unrestricted areas below the limits stated in 10 CFR 20.1302 during periods of fission product leakage at design levels for the fuel.
- The system's design features control the release of radioactive materials to the environs via gaseous effluents in accordance with GDC 60.
- The system's design features comply with GDC 61, as it relates to radioactivity control in the WGS and the ventilation systems associated with fuel storage and handling areas.
- The system's design features comply with GDC 3, as it relates to protecting the WGS from the effects of an explosive mixture of hydrogen and oxygen.
- A COL action Item provides for demonstrating WGS compliance with 10 CFR Part 50, Appendix I, requirements for population doses (COL Action Item 11.3-1).
- The system's design features satisfy RG 1.140 and RG 1.143.
- The capability of the system's design features ensure WGS conformance with BTP ETSB 11-5 guidelines in the analysis of a postulated waste gas system leak or failure.
- The application provides information sufficient to comply with 10 CFR 50.34a, as it relates to demonstrating that the design objectives for the equipment necessary to control releases of radioactive effluents to the environment have been met.

SER Evaluation Findings (cont.)

- Gaseous waste systems (cont.):
  - Design features satisfy RG 1.140 and RG 1.143.
  - Capability of system design features ensure conformance with BTP guidelines in analysis of postulated waste gas system leak or failure.
  - Sufficient design information has been provided to demonstrate that design objectives have been met.

U.S.NRC
United States Nuclear Regulatory Commission
Protecting People and the Environment

329

BTP ETSB 11-5.

SER Evaluation Findings (cont.)

- Solid waste systems:
  - System capable of maintaining effluent concentrations below 10 CFR 20.1302 limits.
  - Design features comply with GDC 60, 63 and 64.
  - Onsite storage of waste complies with BTP ETSB 11-3.
  - Quality group and seismic classification of structures housing system conform to RG 1.143.
  - Sufficient design information has been provided to demonstrate that design objectives have been met.

U.S.NRC
United States Nuclear Regulatory Commission
Protecting People and the Environment

330

- The system, in conjunction with the WLS and WGS, is capable of maintaining the concentration of any liquid or gaseous effluents in unrestricted areas arising from system operation below the limits of 10 CFR 20.1302.
- Design features have been incorporated into the system to comply with GDC 60, 63, and 64.
- Provisions for onsite storage of processed solid wastes conform to BTP ETSB 11-3, Position B.III.
- Quality group and seismic classification applied to the structures housing the system conform to RG 1.143.
- COL applicants will be responsible for complying with the requirements of 10 CFR Part 61 and 10 CFR Part 71 (part of COL Action Item 11.4-1).
- The applicant provided information sufficient to satisfy the requirements of 10 CFR50.34a regarding the adequacy of design information.
- Based on the above evaluation of the WSS, conducted in accordance with the applicable acceptance criteria of Section 11.4 of the SRP, the staff finds the WSS to be acceptable.

SER Evaluation Findings (cont.)

- Process/effluent monitoring and sampling:
  - Sampling and monitoring includes proper instrumentation.
  - Sampling and analytical programs for operations as well as post-accident.
  - Automatic termination of releases.

U.S.NRC
United States Nuclear Regulatory Commission
Protecting People and the Environment

331

- Reviewed the provisions to sample and monitor all plant effluents in accordance with GDC 64. The process and effluent radiological monitoring and sampling systems include instrumentation for monitoring and sampling radioactivity in contaminated liquid, gaseous, and solid waste process and effluent streams.
- Reviewed the provisions for conducting sampling and analytical programs, in accordance with the guidelines in RG 1.21 and 4.15, as well as the provisions for sampling and monitoring process and effluent streams during postulated accidents in accordance with the guidelines in RG 1.97. These sampling and analytical programs conform to the guidance.
- The staff reviewed the provisions to provide automatic termination of effluent releases and to ensure control over discharge, in accordance with GDC 60. Section 11.5.1 of this report discusses controlling releases of radioactive materials from WGS exhaust, WLS discharge, MCR air supply, fuel handling area, annex building exhaust, auxiliary building exhaust, turbine island vent discharge, SG blowdown, waste water discharge, and component cooling water. In Section 11.5.1 of this report, the staff reviewed and found the design features aimed at controlling radiation releases acceptable.
- The staff review included the provisions for sampling and monitoring the fuel handling and waste storage areas in accordance with GDC 63.
- Based on this review and the above SER evaluation findings, the staff has determined that the AP1000 RMS design meets the guidelines of SRP Section 11.5. Therefore, it is acceptable.

COL Items

- Liquid waste:
  - Site-specific cost-benefit analysis for reducing dose (11.2-2).
  - Identify type of media to be used in the system (11.2-3).
  - Rate of discharge and dilution to maintain acceptable concentrations (11.2-4).

U.S.NRC
United States Nuclear Regulatory Commission
Protecting People and the Environment

332

11.2-2

- COL applicant will provide a site-specific cost-benefit analysis to address the requirements of 10 CFR Part 50, Appendix I, regarding population doses resulting from the release of liquid effluents.
- COL applicant will also demonstrate conformance with RG 1.110, as it relates to performing a site-specific Radioactive Waste Management cost-benefit analysis for reducing dose.

11.2-3

- COL applicant will identify the types of liquid waste ion exchange and adsorbent media to be used in the WLS, dependent upon developments in ion exchange technology and specific characteristics of the liquid radwaste to be processed.

11.2-4

- COL applicant should identify its planned discharge flow rate for borated wastes.
- COL applicant will determine the rate of discharge and the dilution necessary to maintain an acceptable concentration, in compliance with local requirements.
- COL applicant shall provide the dilution factor for all WLS discharges are made through a single liquid waste discharge line to the circulating water blowdown stream

COL Items

- Gaseous waste:
  - Site-specific cost-benefit analysis (of Appendix I) of population doses from gaseous effluents (11.3-1).
  - Identify types of adsorbent media used in the waste gas system (11.3-2).

U.S.NRC
United States Nuclear Regulatory Commission
Protecting People and the Environment

333

11.3-1

- COL applicant will provide a site-specific cost-benefit analysis to address the requirements of 10 CFR Part 50, Appendix I, regarding population doses resulting from gaseous effluents.

11.3-2

- COL applicant will identify the types of adsorbent media to be used in the WGS.

COL Items

- Solid waste:
  - Submit a PCP in compliance with 10CFR61 (11.4-1).

U.S.NRC
United States Nuclear Regulatory Commission
Protecting People and the Environment

334

11.4-1

- Applicant will provide a PCP which includes dewatering or solidification (if performed),
- Staff will then determine whether the application demonstrates that the solid waste system complies with the requirements of 10 CFR 61.55, 10 CFR 61.56, 10 CFR Part 71, and relevant DOT regulations.
- The PCP shall identify the operating procedures for processing wet solid wastes.
- The mobile system PCP should include a discussion of conformance to RG 1.143, and should address the issues raised in Generic Letters (GLs) 80-009 and 81-039.
- It should also include a discussion of equipment containing wet solid wastes in the nonseismic radwaste building.

COL Items

- Monitoring and sampling:
  - ODCM to address set points and monitoring to eliminate the potential for unmonitored and uncontrolled releases (11.5-1).
  - Ensure process and effluent monitoring conforms to ANSI-N13.1-1969 (11.5-2).
  - Address Appendix I guidelines for offsite individual and populations doses via liquid and gaseous effluents (11.5-3).

U.S.NRC
United States Nuclear Regulatory Commission
Protecting People and the Environment

335

11.5-1

- Applicant will develop an ODCM that contains the methodology and parameters used for calculation of offsite doses resulting from gaseous and liquid effluents.
- The ODCM will include planned discharge flow rates.
- Will address operational set points for the radiation monitors.
- Address programs for monitoring and controlling the release of radioactive material to the environment.

11.5-2

- Applicant is responsible for ensuring that the process and effluent monitoring and sampling program at its site conforms to the guidelines of ANSI-N13.1-1969, RG 1.21, RG 4.15.

11.5-3

- Address numerical objectives in 10 CFR Part 50, Appendix I, for offsite doses resulting from gaseous and liquid effluents during normal plant operation.
- Limit annual and quarterly offsite doses.
- Applicant submit an evaluation of the effect of the long-term buildup in the environment of radionuclides with half lives longer than 1 year.
- Applicant will implement the items described above, as specified in a plant controlled document.
- Applicant is responsible for addressing the 10 CFR Part 50, Appendix I guidelines for offsite individual doses and population doses via liquid and gaseous effluents.

AP1000 Radiation Protection

Module 12

SER Sections 12.1 – 12.6

INSTRUCTOR: J. Stewart Bland
October 2008

U.S.NRC
United States Nuclear Regulatory Commission
Protecting People and the Environment

336

We will cover all of Chapter 12 as they were one document. However, in some of the slides, the subchapters are broken out for clarity of explanation.

Learning Objectives

- Class Participants are expected to understand:
  - The NRC criteria and review approach for the radiation protection activities described by this DCD.
  - How the AP1000 addresses the SRP acceptance criteria.
  - Significant NRC questions/RAIs.
  - SER evaluation findings.
  - COL items from each applicant.

U.S.NRC
United States Nuclear Regulatory Commission
Protecting People and the Environment

337

There are five subchapters to this module and each subchapter covers a different part of radiation protection. These are thoughts that need to be considered when reviewing this plant design for RP purposes.

12.2 Ensuring That Occupational Radiation Doses Are As Low As Is Reasonably Achievable to assess adherence to the guidelines in RG 1.70, "Standard Format and Content of Safety Analysis Reports for Nuclear Power Plants," Revision 3, as well as the criteria in Section 12.1 of the SRP regarding the radiation protection aspects of the AP1000 reactor design.
12.3 Radiation Sources - The applicant will use the contained source terms described in the DCD as the basis for the radiation design calculations (shielding and equipment qualification) and personnel dose assessment. The applicant will use the airborne radioactive source terms in the DCD in the design of ventilation systems and for assessing personnel dose. The staff reviewed the source terms in the DCD to ensure that the applicant had either committed to follow the guidelines of the RGs and staff positions set forth in Section 12.2 of the SRP, or provided acceptable alternatives.
12.4 Radiation Protection Design - Information on radiation protection design (including facility design features, shielding, ventilation, and area radiation and airborne radioactivity monitoring instrumentation).
12.5 Dose Assessment - Addressing the anticipated occupational radiation exposures due to normal and anticipated inspection and maintenance, and by incorporating design features to reduce occupational radiation exposures, the applicant has shown that the AP1000 is designed to operate within the occupational dose limits specified in 10 CFR 20.1201.
12.6 Health Physics Facilities Design - Addresses the objectives and design of the AP1000 health physics facilities. The applicant stated that the COL applicant will address the organizational and procedural aspects of the AP1000 radiation protection program.

SRP Acceptance Criteria

- Acceptance criteria are based upon NRC criteria specified in:
  - 10 CFR 19 “Notices, instructions and reports to workers”.
  - 10CFR 20 “Standards for protection against radiation”.
  - GDC criteria outlined in 10 CFR 50.
  - Regulatory Guide Series 1 and 8.
  - NUREG-0737, Clarification of TMI requirements.
  - ANSI documents.

U.S.NRC
United States Nuclear Regulatory Commission
Protecting People and the Environment

338

- **Part 19--Notices, instructions and reports to workers: inspection and investigations**
  The regulations in this part establish requirements for notices, instructions, and reports by licensees and regulated entities to individuals participating in NRC-licensed and regulated activities and options available to these individuals in connection with Commission inspections of licensees and regulated entities, and to ascertain compliance with the provisions of the Atomic Energy Act of 1954. Applies to users of RAM, applicants and holders of licenses,

- **Part 20--Standards for protection against radiation**
  The regulations in this part establish standards for protection against ionizing radiation resulting from activities conducted under licenses issued by the Nuclear Regulatory Commission.

  It is the purpose of the regulations in this part to control the receipt, possession, use, transfer, and disposal of licensed material by any licensee in such a manner that the total dose to an individual (including doses resulting from licensed and unlicensed radioactive material and from radiation sources other than background radiation) does not exceed the standards for protection against radiation prescribed in the regulations in this part.

- **RG 1.8 Qualification and Training of Personnel for Nuclear Power Plants**
- **RG 1.97, Criteria For Accident Monitoring Instrumentation For Nuclear Power Plants**
- **RG 8.8, Information Relevant to Ensuring that Occupational Radiation Exposures at Nuclear Power Stations Will Be as Low as Is Reasonably Achievable -RG 8.10, Operating Philosophy for Maintaining Occupational Radiation Exposures as Low as Is Reasonably Achievable**
- **RG 8.27, Radiation Protection Training for Personnel at Light-Water-Cooled Nuclear Power Plants**
- **NUREG-0737, Clarification of TMI Action Plan Requirements**
- **ANSI/ANS-HPSSC 6.8.1 “Location and Design Criteria for Area Radiation Monitoring Systems for Light Water Nuclear Reactors”**
- **ANSI N13.1 “Sampling and Monitoring Releases of Airborne Radioactive Substances from the Stacks and Ducts of Nuclear Facilities”**

Specifics of Acceptance Criteria

- 10 CFR 20
  - Outlines dose criteria for worker and MOP exposure.
  - Control of access to RAM.
  - Defines personnel monitoring.
  - Defines As Low As Reasonably Achievable (ALARA).

U.S.NRC
United States Nuclear Regulatory Commission
Protecting People and the Environment

339

MOP = member of the public
Access to RAM being:

- performance of surveys
- access control to restricted areas (HRA, VHRAs, etc.)
- sources (sealed and unsealed, licensed material)
- waste disposal
- posting and labeling requirements

Personnel monitoring includes:

- monitoring of internal and external exposure
- Respiratory protection

ALARA rule 10 CFR 20.1101(b) states:

- use, to the extent practical, procedures and engineering controls based on sound radiation protection principles to achieve occupational doses and doses to members of the public that are as low as is reasonably achievable (ALARA).

GDC Criteria

- GDC 19 – Control room
  - Control room occupants shall not exceed 0.05 Sv for the duration of the accident.
- GDC 61 “Fuel storage and handling radioactive material:
  - Permit periodic inspection/testing.
  - Suitable shielding.
  - Appropriate confinement.
  - RHR capability.
  - Prevention of coolant inventory.

U.S.NRC
United States Nuclear Regulatory Commission
Protecting People and the Environment

340

Criterion 19--Control room important statement is*:*

- Adequate radiation protection shall be provided to permit access and occupancy of the control room under accident conditions without personnel receiving radiation exposures in excess of 5 rem whole body for the duration of the accident.
- Dose rates in areas requiring continuous occupancy should be less than 15 millirem per hour averaged over 30 days.

Criterion 61--Fuel storage and handling and radioactivity control.

- Shall be designed … with suitable shielding for radiation protection.

RG 1 Series Criteria

- RG 1.8, “Qualification and Training of Personnel for Nuclear Power Plants”
- RG 1.97, “Instrumentation for Light-Water-Cooled Nuclear Power Plants to Assess Plant and Environs Conditions During and Following as Accident”

U.S.NRC
United States Nuclear Regulatory Commission
Protecting People and the Environment

341

1.8 - endorses ANSI/ANS-3.1-1993, “Selection, Qualification, and Training of Personnel for Nuclear Power Plants”

- Provides additional criteria/exceptions to ANSI 3.1.
- Adds definitions, qualification criteria for certain positions.
- Adds qualification criteria for degrees, related experience, and training.

1.97, Rev 3 – The criteria and requirements contained in ANSI/ANS-4.51980, "Criteria for Accident Monitoring Functions in Light Water-Cooled Reactors," are considered by the NRC staff to be generally acceptable for providing instrumentation to monitor variables for accident conditions subject to stated exceptions.

- Provides table of design and qualification criteria for instrumentation.
- Provides table of PWR and BWR variables.
- There is a Rev 4 dated June 2006, entitled “Criteria for Accident Monitoring Instrumentation for Nuclear Power Plants,” but it is not referenced in the AP1000 DCD. It endorses IEEE Std. 497-2002, “IEEE Standard Criteria for Accident Monitoring Instrumentation for Nuclear Power Generating Stations.” It is intended for licensees of new nuclear power plants and was issued after the DCD was reviewed.

In DCD Tier 2, Section 11.5.6.2, “Post Accident Area Monitors,” the applicant stated that the AP1000 design incorporates four electrically independent ion chambers located inside the containment to measure high range gamma radiation. These detectors will be mounted on the inner containment wall in widely separated locations, and will have an unobstructed “view” of a representative volume of the containment atmosphere. The design and qualification of these monitors complies with the guidelines of RG 1.97, "Instrumentation for Light-Water-Cooled Nuclear Power Plants to Assess Plant and Environs Conditions During and Following an Accident," Revision 3, dated May 1983, and NUREG-0737, Item II.F.1(3), with respect to detector range, response, redundancy, separation, onsite calibration, and environmental design qualification.

The airborne radiation monitoring equipment will be placed in selected areas and ventilation systems to give plant operating personnel continuous information about the airborne radioactivity levels throughout the plant. The airborne radioactivity monitors are located upstream of the filter trains to monitor representative radioactivity concentrations from the areas being sampled.

RG 8 Series Criteria

- RG 8.8, “Information Relevant to Ensuring that Occupational Radiation Exposures….ALARA”
- RG 8.10, “Operating Philosophy for Managing Occupational Radiation Exposures ALARA”
- RG 8.19, “Occupational Radiation Dose Assessment in Light-Water Reactor Power Plants—Design Stage Man-Rem Estimates”

U.S.NRC
United States Nuclear Regulatory Commission
Protecting People and the Environment

342

RG 8.8 – provides information relevant for planning, designing, constructing, operating and decommissioning to meet Part 20 criteria.

- Program requirements
  - organization, personnel, responsibilities
  - training and instruction
  - Review of new or modified equipment designs
- Facility and equipment design features
  - access control to radiation areas
  - radiation shield and geometry
  - Process instrumentation and control
  - control of airborne

The AP1000 design will restrict the presence of antimony to less than 1 percent in all materials that contact the RCS, and will prohibit antimony completely from the RCP and its bearings. Crud traps created in weld areas will be minimized by using butt welds. Tanks containing radioactive liquid will have drain pipes connected at the lowest part of the tank, and will have convex or sloped-bottom designs to minimize radioactivity deposition. Piping systems used to transport process resins will be designed to minimize pipe plugging by running the piping vertically as much as practicable and sloping horizontal piping runs towards the spent resin tanks. Smooth curves will replace elbows in piping runs, where practicable, to reduce potential crud traps. Welds will be made smooth to prevent crud traps from forming. Equipment and piping containing radioactive materials will have provisions for draining and flushing. These design features, which are intended to minimize the buildup, transport, and deposition of activated corrosion products in the RCS and auxiliary systems, are based on the guidelines in RG 8.8

RG 8.8 contains guidance on acceptable ventilation design features to control airborne radioactivity levels and maintain personnel doses ALARA. The AP1000 ventilation systems are designed to protect personnel and equipment from extreme environmental conditions, and to ensure that personnel exposure to airborne radioactivity levels is minimized and maintained ALARA and within the applicable limits of 10 CFR Part 20.

- Ventilation fans and filters are provided with adequate access space to permit servicing and filter change out with minimum personnel radiation exposure.
- Ventilation ducts are designed to minimize the build up of radioactive contamination within the ducts.

RG 8.10 – outlines licensee managements (plant management):

- commitment to ALARA
- commitment to a well-supervised RP capability
- see that workers are well-trained
- that RPM has sufficient authority

RG 8.19 - In performing the dose assessment, the applicant reviewed exposure data from operating plants to obtain a breakdown of the doses incurred within each dose assessment category referenced in RG 8.19. The applicant then adjusted these values to account for AP1000 design features.
By addressing the anticipated occupational radiation exposures due to normal and anticipated inspection and maintenance, and by incorporating design features to reduce occupational radiation exposures, the applicant has shown that the AP1000 is designed to operate within the occupational dose limits specified in 10 CFR 20.1201 (suggested breakdowns per 8.19).

NUREG-0737 Criteria

- Item II.B.2 provides guidance on how to meet 10 CFR 50.34(f)(2)(vii) – describes source terms used for post-accident conditions.

U.S.NRC
United States Nuclear Regulatory Commission
Protecting People and the Environment

343

Part 50.34 – “Perform radiation and shielding design reviews of spaces around systems that may, as a result of an accident, contain accident source term radioactive materials, and design as necessary to permit adequate access to important areas and to protect safety equipment from the radiation environment. (II.B.2).”

Item II.B.2 of NUREG-0737 describes a “vital area” as any area that will, or may, require occupancy to permit an operator to aid in the mitigation of, or recovery from, an accident.

Item II.B.2 also recommends listing all vital areas in the plant, and providing a summary of the integrated doses to personnel for each of the plant areas requiring either continuous occupancy or infrequent access for the duration of the accident. (These doses should include exposure received while in transit between vital areas.)

ANSI Standards

- ANSI/ANS-HPSSC 6.8.1-1981 “Location and Design Criteria for Area Radiation Monitoring Systems for Light Water Nuclear Reactors”
- ANSI N13.1 – 1999 “Sampling and Monitoring Releases of Airborne Radioactive Substances from the Stacks and Ducts of Nuclear Facilities”

U.S.NRC
United States Nuclear Regulatory Commission
Protecting People and the Environment

344

ANSI/ANS-HPSSC 6.8.1-1981

- “Location and Design Criteria for Area Radiation Monitoring Systems for Light Water Nuclear Reactors.”
- As it relates to criteria for the establishment of locations for fixed continuous area gamma radiation monitors and for design features and ranges of measurement. In order to inform personnel of local dose rates in the area, area radiation monitors include a local readout and audible alarm in addition to readouts and alarms in the main control room. In addition, visible alarms are located outside each monitored area so that operating personnel can see them before entering the monitored area.

ANSI N13.1-1999

- “Sampling and Monitoring Releases of Airborne Radioactive Substances from the Stacks and Ducts of Nuclear Facilities.”
- As it relates to the principles that apply in obtaining valid samples of airborne radioactive materials, and acceptable methods and materials for gas and particle sampling.

Not listed but used in reviews -

- ANSI/ANS 6.4-1997 (R2004).
- As it relates to requirements and recommended practices for the construction of concrete radiation shielding structures.

AP1000 DCD Content

1. Describes exposure reduction (ALARA):
   - ALARA design and construction.
   - Operation policies.
   - Equipment design considerations for ALARA.
   - Facility layout design considerations for ALARA.

U.S.NRC
United States Nuclear Regulatory Commission
Protecting People and the Environment

345

These next slides will provide an overview of how Westinghouse proposed to meet the acceptance criteria.

DCD Section 1. (SER section 2) – Ensuring that Occupational Radiation Doses are as Low as is Reasonably Achievable

- ALARA design and construction – includes plant design and integrated layout, considering shielding, ventilation, and monitoring instrument designs as they relate to traffic control, security, access control and health physics.

- Operational policies – the COL applicant will address the activities conducted by management personnel who have plant operational responsibility for radiation protection.

- Equipment design considerations for ALARA –
  - design of systems for reliability and maintainability to reduce maintenance on radioactive components;
  - design of systems to reduce the radiation fields, thereby allowing operation, maintenance and inspection activities to be performed in lower radiation fields;
  - design of systems to reduce access, repair and removal times to reduce time spent in radiation fields;
  - design of systems to accommodate remote and semi-remote operation, maintenance and inspection.

- Facility layout design for ALARA –
  - locating equipment, instruments and sampling stations for ease of access and minimum occupancy time;
  - facility design to minimize radiation levels in plant access areas and in the vicinity of equipment requiring personnel attention.

DCD Content (cont.)

2. Describes the sources of radiation:
   - For shielding calculations: 0.25% fuel cladding defects.
   - Basis for design calculations.
   - Use airborne source terms to design ventilation.
   - For dose assessment.

U.S.NRC
United States Nuclear Regulatory Commission
Protecting People and the Environment

346

DCD Section 2. (SER Section 3) – Radiation Sources

Describes the sources of radiation that form the basis for shielding design calculations and the sources of airborne radioactivity used for the design of personnel protection measures and dose assessment. Applicant used 0.25% fuel defects for shielding. Other than the core, the RCS is the major contributor to rad levels; N-16 is the predominant radionuclide.

- Basis for design calcs – for shielding (dose reduction) and equipment qualification (environmental concerns, i.e., moisture, total radiation, etc): design basis sources for normal operation, outage operation and accident scenarios (activity of fission products, corrosion products, N-16 issues. The DCD also includes the assumptions that the applicant used in arriving at quantitative values for contained and airborne source terms, based on the relevant requirements of GDC 61 and 10 CFR Part 20.
- Source terms reviewed by staff to ensure they committed to follow the guidelines of RGs and staff positions set forth the 12.2 of the SRP

Following are the objectives of this subsection:

- Attain optimal reliability and maintainability, thereby reducing maintenance requirements for radioactive components.
- Reduce radiation fields, thereby allowing operations, maintenance, and inspection activities to be performed in reduced radiation fields.
- Reduce access, repair, and equipment removal times, thereby reducing the time spent in radiation fields.
- Accommodate remote and semi-remote operation, maintenance, and inspection, thereby reducing the time spent in radiation fields.

DCD Content (cont.)

3. Describes radiation protection design features for ALARA:

   – Common equipment and component designs.
   – Common facility and layout designs.
   – Radiation zoning and access control.
   – Shielding design.
   – Ventilation design.
   – Area and airborne monitoring instrumentation.

U.S.NRC
United States Nuclear Regulatory Commission
Protecting People and the Environment

347

DCD Section 3. (SER Section 4) – Radiation Protection Design

- Common Equipment and Component Designs are included for the reactor vessel, reactor coolant pumps, reactor vessel insulation, steam generators, reactor coolant pipe connections, filters, pumps, tanks and sumps, heat exchangers, instruments, valves, piping, floor and equipment drains, lighting, heating, ventilation and air-conditioning, sample stations, materials, refueling machine and reactor head closure system.
- Common Facility and Layout Designs are included for valve modules, piping, wall penetrations, contamination control, equipment layout, and field run piping.
- Radiation Zoning and Access Control discusses access control of personnel by posting of radiation signs, use of alarms and locks, radiation zones categories during normal and accident conditions.
- Shielding Design discusses shielding design objectives, shielding design for the containment, auxiliary building, fuel handling building, radwaste building, turbine building, control room, miscellaneous plant areas and plant yard areas, spent fuel transfer canal and tube, and shielding calculational methods
- Ventilation Design discusses the design criteria, design features to minimize and control airborne radioactivity, design to minimize personnel exposure from HVAC equipment, and air filtration units.
- Area and airborne monitoring instrumentation are discussed in DCD Section 11.5.

DCD Content (cont.)

4. Addresses anticipated direct exposure and incorporates improvements over current designs.

5. Provides for administrative control of activities to limit exposure within the plant and control effluents.

U.S.NRC
United States Nuclear Regulatory Commission
Protecting People and the Environment

348

DCD Section 4. (SER Section 5) – Dose Assessment

Using the information in Subchapter 2 (sources of radiation) and operating experience from current plants, the AP1000 DCD develops anticipated exposures for the following categories (per RG 8.19 format and methods):

- Reactor operations and maintenance
- Routine maintenance
- In-service inspection
- Special maintenance
- Waste processing
- Fuel handling operations

DCD Section 5. (SER Section 6) – Health Physics Facilities Design

5 - Radiation exposures in the AP1000 are primarily due to direct radiation from components and equipment containing radioactive material. In addition, in some areas of the plant there can be radiation exposure to personnel due to the presence of airborne radionuclides. This section addresses the anticipated occupational radiation exposure (ORE) due to normal operation and anticipated inspection and maintenance.

Significant RAIs

- 471.007 – Westinghouse was requested to provide additional clarifying information on dimensions, volumes, material and equipment self-shielding for dominant radiation sources within the plant.
- Response – Westinghouse provided a table describing sources.

U.S.NRC
United States Nuclear Regulatory Commission
Protecting People and the Environment

349

RAI Number:
471.007
Question:
In response to Question 471.001 for the AP600 (concerning shielding of plant radiation sources DCD Section 12.3.2.2), you provided Table 471.1-1. This table provided data on source geometry, effective source density, and equipment self-shielding for dominant sources in all shielded areas of the plant. Verify that the data contained in this table is still valid for the AP1000.

Westinghouse Response:
Table 471.1 -1 from AP600 RAI 471.001 is not applicable to AP1000. The corresponding AP1000 information is attached. [A table was then attached that described the dominant radiation sources by room].

Significant RAIs

- 471.009 – Westinghouse asked to provide verification of exposures after an accident (GDC criteria).
- Response – Verified list of access and provided updated table of doses per activity.

U.S.NRC
United States Nuclear Regulatory Commission
Protecting People and the Environment

350

RAI Number: 471.009

Question:

In response to Question 471.22 for the AP600 (concerning post-accident radiation levels and vital areas), you added Section 12.4.1.8 to the DCD which included a listing of the areas that require post-accident accessibility for the AP600.

A. Verify that the list of vital areas which appears in Section 12.4.1.8 is still an all inclusive list of vital areas for the AP1000.
B. For each of the vital areas listed in Section 12.4.1.8, provide the time period (in hours) following the accident after which it would be necessary to access this area, the time period required for performance of actions at the vital area location (including ingress and egress times), and the integrated whole body dose per individual for each of the vital areas for performance of the vital area duties.

Westinghouse Response:

A. The list of vital areas provided in Section 12.4.1.8 is the appropriate list of areas requiring post-accident access for AP1000.
B. The summary of doses per activity is provided in Table 471.009-1.

SER Evaluation Findings

- ALARA Considerations
  - The ALARA policy is consistent with the guidelines of RG 8.8 and finds the AP1000 design features to be acceptable.
  - Relevant requirements of 10CFR20 and the Regulatory Guides have been met.
  - Design is meant to keep doses low.
    - Low maintenance.
    - Reduced radiation fields.
    - Separate shielded cubicles.
  - The COL applicant will address the policy and operational considerations and defer COL Action Items until that time.

U.S.NRC
United States Nuclear Regulatory Commission
Protecting People and the Environment

351

- The design features are intended to maintain individual doses and total person-rem doses to plant workers and to members of the public ALARA, while maintaining individual doses within the limits of 10 CFR Part 20.

- The staff finds it acceptable for the applicant to defer discussion of the material addressed by COL Action Items 12.2.1-1 and 12.2.3-1. The staff will determine compliance with the requirements of 10 CFR Part 20 in these areas during the COL review.

- ALARA - Based on the information supplied by the applicant, the staff concluded that the AP1000 design features meet the criteria of Section 12.1 of the SRP. These design features are intended to maintain individual doses and total person-rem doses to plant workers and to members of the public ALARA, while maintaining individual doses within the limits of 10 CFR Part 20.

SER Evaluation Findings (cont.)

- Radiation sources
  - Design Basis source term values exceed the average plant values.
  - Source strengths by energy group or max activity levels by isotope.
  - Core melt source-term based on NUREG-1465.
  - Includes assumptions for source terms.
  - Used airborne source terms for design of ventilation.
  - Relevant requirements of 10 CFR 20 and GDC 61 have been met.

U.S.NRC
United States Nuclear Regulatory Commission
Protecting People and the Environment

352

The DB source term values (used to determine the shielding thickness) for the major corrosion product nuclides. AP1000 design basis source term values exceed the average 4-loop plant values by a factor of 2 to 7

Source strengths are given for the core, the RCS, CVCS, SFP and SFP cooling system, liquid/gaseous/solid radwaste systems and miscellaneous sources. In response to an earlier RAI, Westinghouse provided additional information on dimensions, volumes, material and equipment self-shielding for dominant radiation sources.

Core melt source term – NUREG model complies with the requirements of 10CFR50.34 (f)(2)(vii).

Used source strengths to calculate post-accident dose rates and worker doses following an accident. Since these source terms models (from NUREG-1465) comply with requirements of 50.34(f)(2)(vii); the staff finds this acceptable.

Also includes the assumptions used in arriving at quantitative values for contained and airborne source terms based on requirements of GDC 61 and Part 20. Westinghouse described sources of airborne to include leakage of RCA and activation of naturally-occurring argon in the atmosphere in containment; leakage from spent fuel assemblies and evaporative losses from the SFP; and primary equipment leakage in the aux building.

Consistent with guidance found in the listed RGs and staff positions, therefore the staff finds the material in this section acceptable.

SER Evaluation Findings (cont.)

- Radiation protection design features
  - The equipment and layout design features described conform with the guidelines.
  - The applicant established the maximum design dose rates for each zone.
  - The listing of the plant vital areas is conforms.
  - The shielding techniques comply with the guidelines.
  - Radiation protection design features - relevant requirements of 10 CFR 20 and the regulatory guides have been met.

U.S.NRC
United States Nuclear Regulatory Commission
Protecting People and the Environment

353

• The design features which are intended to minimize the buildup, transport, and deposition of activated corrosion products in the RCS and auxiliary systems, are based on the guidelines in RG 8.8.

•The use of highly reliable equipment reduces the frequency of maintenance and associated personnel exposure.
• Except in limited applications where it is necessary for reliability considerations, materials in contact with the reactor coolant system (RCS) have low concentrations of cobalt and nickel. This reduces the amounts of cobalt-60 and cobalt-58 introduced in the RCS. (Cobalt-60 and cobalt-58 are the major sources of radiation exposure during shutdown, maintenance, and inspection activities at light water reactors (LWRs).)
• Adequate spacing and lay down areas facilitate access for maintenance and inspection.
•The amount of time spent in radiation areas is minimized with enhanced servicing convenience for anticipated maintenance or potential repairs, including ease of disassembly and modularization of components for replacement or removal to a lower radiation area for repair.
• Radioactive systems are separated from non-radioactive systems, and high radiation sources are located in separate shielded cubicles.
•Equipment requiring periodic servicing or maintenance (e.g., pumps, valves, and control panels) are separated from sources with higher radioactivity such as tanks and piping.
• Valves located in high radiation areas are equipped with reach rods or motor operators to minimize operator exposure.
• Equipment and piping are designed to minimize the accumulation of radioactive materials.
• Drains are located at low points.
• Piping is seamless, and the number of fittings is minimized, thereby reducing the radiation accumulation at seams and welds.
• Use of flushing connections minimizes the buildup of crud in system components.
• Systems that produce radioactive waste are located close to radwaste processing systems to minimize the length of piping runs carrying highly radioactive material.
• Pipes that carry resin slurries are run vertically as much as possible and large-radius bends are used instead of elbows, thereby minimizing the potential for pipe plugging.

• The applicant's method of plant zoning, for normal operations, is consistent with the guidance in RG 1.70 and the SRP.
• The listing of the plant vital areas, along with the analyses, satisfies the requirements of 10 CFR 50.34(f)(2)(vii) as they apply to plant shielding of vital areas.
• The shielding techniques comply with the guidelines contained in RG 8.8 for protecting plant personnel and the public against exposure from various sources of ionizing radiation in the plant.
The Monte Carlo shielding codes used to calculate doses for complex geometries, such as labyrinth structures and penetrations, are acceptable to evaluate the adequacy of the AP1000 station shielding design.

The AP1000 ventilation systems are designed to protect personnel and equipment from extreme environmental conditions, and to ensure that personnel exposure to airborne radioactivity levels is minimized and maintained ALARA and within the applicable limits of 10 CFR Part 20.
• The design ensures that the dose to control room personnel during accident conditions will not exceed the limits specified in GDC 19.
• The location of the area and airborne radioactivity monitors for AP1000, as described in the DCD, meets the criteria of ANSI/ANS Standard HPSSC-6.8.1-1981.
• The use and location of the criticality radiation monitors in the fuel handling area satisfies the criticality accident requirements of 10 CFR 70.24.
• The area radiation and airborne radioactivity monitors described in the AP1000 DCD comply with the applicable requirements of 10 CFR Parts 20, 50, and 70, as well as the personnel radiation protection guidelines of RGs 1.97, 8.2, and 8.8. The monitors are designed to monitor both area and airborne radioactivity levels in the plant to ensure that doses to plant personnel are maintained ALARA.

•Requirements of 10CFR20 met –
•Operating Experience utilized
•Microshield used for shielding calculations
•Ventilation properly designed

Radiation Protection Design Features - The staff concluded that the applicant has committed to following the guidelines of the RGs and staff positions set forth in Section 12.3-12.4 of the SRP. Because the DCD adheres to these RGs and staff positions, the staff concluded that the relevant requirements of 10 CFR Parts 20, 50, and 70 have been met.

SER Evaluation Findings (cont.)

- Radiation protection design (cont.)
  - The AP1000 ventilation systems are designed to protect personnel and equipment.
  - The location of the area and airborne radioactivity monitors meets the criteria.

U.S.NRC
United States Nuclear Regulatory Commission
Protecting People and the Environment

SER Evaluation Findings (cont.)

- Dose assessment
  - Estimated total annual dose of 0.671 person-sievert.
  - Consistent with EPRI Guideline of 1.0 person-sievert.
  - Assessed doses received by staff.
  - Designed to operate within requirements.
  - Operating Experience used.

U.S.NRC
United States Nuclear Regulatory Commission
Protecting People and the Environment

355

Dose Assessment –

- This annual dose does not account for airborne activity but operating experience demonstrates that dose from airborne radioactivity is not a significant contributor to total dose.
- This is also consistent with 2002 average PWR total exposure of 0.87 person-sievert.
- Westinghouse did not submit the dose assessment in the required format (per RG 8.19) but the detail meets the intent so the Staff found it acceptable.

Staff selectively compared dose assessment against operating experience. Several improvements over current designs are incorporated; reduced special maintenance on SGs and canned RCPs. AP1000 does not use waste or boron recycle evaporators and does not have a catalytic H recombiner. The design also incorporates an integrated head package thereby reducing refuel dose. All these items were taken into account by Westinghouse when performing the dose assessments due to normal and anticipated inspection and maintenance.

Dose Assessment – 20.1201 is “Occupational dose limits for adults”;

- The total effective dose equivalent being equal to 5 rems (0.05 Sv); or
- The sum of the deep-dose equivalent and the committed dose equivalent to any individual organ or tissue other than the lens of the eye being equal to 50 rems (0.5 Sv).
- A lens dose equivalent of 15 rems (0.15 Sv), and
- A shallow-dose equivalent of 50 rem (0.5 Sv) to the skin of the whole body or to the skin of any extremity

Also evaluated against guidelines in RG 1.70 (Standard Format and Content of Safety Analysis Reports for Nuclear Power Plants (LWR Edition)) and criteria set forth in Section 12.3 and 12.4 of the SRP.

SER Evaluation Findings (cont.)

- Facilities design features
  - Describes equipment and facilities.
  - Includes WBC and portable instruments.
  - Facilities displayed on plant drawings.
    - Access control.
    - Significant sources compartmentalized.
    - Restricted areas categorized.
  - Designed to maintain ALARA.
    - Instrumentation.
    - Facilities.
    - Control effluent releases.

U.S.NRC
United States Nuclear Regulatory Commission
Protecting People and the Environment

356

Health physics facilities design – description of facilities is acceptable.

Facilities Design – 20.1101 states that each licensee will develop, document and implement a radiation protection program commensurate with the scope and extent of licensed activities;

- organization,
- equipment, instrumentation and facilities, and
- procedures.

This section also properly categorizes restricted areas as radiation area, high radiation areas, VHRAs, airborne radioactive areas and RMAs – these comply with 10 CFR Part 20. The facilities described also comply with guidance contained in RG 8.8 (Information Relevant to Ensuring that Occupational Radiation Exposures at Nuclear Power Stations Will Be as Low as Is Reasonably Achievable).

COL Items

- ALARA
  - Submit an operational ALARA policy conforming to 10 CFR 20 (12.1-1).
- Radiation Sources
  - COL applicant to provide sources not identified in DCD (12.2-1).

U.S.NRC
United States Nuclear Regulatory Commission
Protecting People and the Environment

357

- 12.1-1. ALARA – the detailed policy considerations regarding overall plant operations and implementation are outside the scope of the design certification review, so the COL applicant must submit an Operational ALARA policy. The COL applicant will submit an operational ALARA policy, which conforms to the requirements of 10 CFR Part 20 and the recommendations of RGs 1.8, 8.8, and 8.10. The COL applicant will submit the intention to follow the operational considerations guidance contained in the RGs listed in Section 12.2.3 of the DCD FSER or state what alternatives will be used.

- 12.2-1 Radiation sources – The COL applicant will identify any additional contained radiation sources, used for instrument calibration or radiography, for staff review.

This includes sources used for instrument calibration or radiography.

COL Items

- Radiation protection design features
  - Develop administrative controls (12.3-1).
  - Provide the criteria and methods for obtaining representative measurements (12.3-2).
- Operational radiation protection program
  - COL applicant to address organization and procedures to maintain exposures ALARA (12.5-1).

U.S.NRC
United States Nuclear Regulatory Commission
Protecting People and the Environment

358

- 12.3-1 RP Design Features
  The COL applicant will develop administrative controls (lock and access control procedures) in order to limit access to radiological restricted areas, including potentially very high-radiation areas.

- 12.3-2 RP Design Features
  The COL applicant will provide the criteria and methods for obtaining representative measurement of radiological conditions, including airborne radioactivity concentrations in work areas.

- 12.5-1 Operational RP Program
  The COL applicant will provide information related to the organization and procedures that will be used for radiological protection and to ensure that personnel radiation exposures will be maintained ALARA. Westinghouse makes no reference in this section of the DCD to the organization or procedures that will be used to ensure that personnel radiation exposures will be maintained ALARA.

AP1000
Operations and Emergency Planning

Module 13
SER Sections 13.1-13.3

INSTRUCTORS: Scott Newberry and Stewart Bland

October 2008

U.S.NRC
United States Nuclear Regulatory Commission
Protecting People and the Environment

359

Learning Objectives for SER 13.1, Organization, and SER 13.2, Training

- Class Participants are expected to understand:
  - The basis for acceptance of the DCD for operations Sections 13.1, Organization, and 13.2, Training.
  - The requirements for the COL applicant in each of these areas.

U.S.NRC
United States Nuclear Regulatory Commission
Protecting People and the Environment

360

The learning objectives are stated on this slide.

Since this part of the review is largely outside the scope of the AP1000 certification, I will include some discussion on what the COL applicant will need to do relative to applicable NRC requirements.

The essence of these requirements is to ensure that the licensee organization is qualified to design, construct, and operated the facility.

SRP 13.1 Acceptance Criteria

- The organization structure of the applicant is the responsibility of the COL applicant.
- This structure should be consistent with the human system interface.
- The NRC staff found that a COL applicant referencing the AP1000 design addressing the organizational structure to be acceptable.

U.S.NRC
United States Nuclear Regulatory Commission
Protecting People and the Environment

361

This slide is a summary of the AP1000 design certification review by the staff.

SRP 13.2 Acceptance Criteria

- The COL applicant will be responsible for all training programs.
- Westinghouse references WCAP 14655, “Designer’s Input for the Training of the Human Factors Engineering Verification and Validation Personnel”.
- The NRC staff found that a COL applicant referencing the AP1000 design addressing the training programs is acceptable.

U.S.NRC
United States Nuclear Regulatory Commission
Protecting People and the Environment

362

The COL applicant will responsible for all training programs as well.

Westinghouse references WCAP 14655 which describes the input from the designer on the training of operations personnel who participate as subjects in the human factors engineering verification and validation.

So, in conclusion, the NRC found the AP1000 DC acceptable base on the inclusion of Action Items for the COL.

But lets spend a little time on what these requirements cover.

SRP Acceptance Criteria

- The NRC review of the AP1000 did not need to apply applicable guidance and requirements.
- SRP Chapter 13 Conduct of Operations.
- 10 CFR 50.40(b) – technically and financially qualified.
- 10 CFR 50.80 – license transfer qualifications.
- 10 CFR 50.54 – conditions in licenses.
- 10 CFR 55.59 – license changes, tests and experiments.
- 10 CFR 19.12 – instructions to workers.
- 10 CFR 26.21 and 26.22 – fitness for duty training.

U.S.NRC
United States Nuclear Regulatory Commission
Protecting People and the Environment

363

As I stated, the Operational Programs aspects of the NRC certification of the AP1000 were not a substantive review because of the need for the COL applicant to take on these responsibilities.

On this slide I list the primary guidance for performing the review-SRP Chapter 13-- which was just updated last year. It addresses organizational structure, the operating organization itself, reactor operator re-qualification and training, and training of non-licensed staff. I recommend the sections of this Chapter of the SRP to you. It ties the review guidance to each regulatory requirement, with a host of references.

<u>Hitting the high points:</u>
Compliance with 50.40(b) requires that the applicant be technically qualified to engage in design construction and operation of a power plant.

50.80 requires that the applicant for a license transfer be technically qualified to hold the license and operate the plant safely.

- A focus of the review is managerial and technical resources for a safe design, operations and emergencies

50.54 and 55.59 relate directly to requirements for the operators themselves.

There are many other regulatory requirements that apply to the training of support personnel. I have listed two of them here. 19.12 deals with instruction of personnel on the presence of radioactive materials while 26 deals with fitness for duty. There are others such as emergency planning and particular systems approaches to training.

All of these would be included in a COL application to the NRC.

Learning Objectives for SER 13.3, Emergency Planning

- Class participants are expected to understand:
  - The SAR sections that address facilities, equipment, and systems supporting emergency preparedness and response capabilities.
  - The facilities that support emergency response.

U.S.NRC
United States Nuclear Regulatory Commission
Protecting People and the Environment

364

The facilities supporting emergency preparedness include, but are not limited to the following:

- The Main Control Room (MCR),
- Technical Support Center (TSC),
- Operational Support Center (OSC), and
- Decontamination facilities.

SRP Acceptance Criteria

- Acceptance criteria are based upon NRC and FEMA criteria specified in:
  - 10 CFR 50, 52 (NRC) – specifies content of applications.
  - 10 CFR 50, Appendix E, Emergency Planning and Preparedness.
  - 10 CFR 100 (NRC) – Reactor Site Criteria.
  - 44 CFR 350, 351, and 352 – FEMA emergency preparedness requirements.

U.S.NRC
United States Nuclear Regulatory Commission
Protecting People and the Environment

365

Note: Most important information is highlighted.

The SRP acceptance criteria are based on meeting the relevant requirements of the following NRC and FEMA regulations:[3]

A. 10 CFR Part 50, Appendix E, as it relates to emergency planning and preparedness, and the emergency response data system (ERDS) [or successor system to ERDS].
Appendix E specifies required contents of the PSAR, the FSAR, the contents of the Emergency Plans (organization, assessment actions, activation of Emergency Organization, Notification Procedures, emergency facilities and equipment, training, maintaining emergency preparedness, recovery, implementing procedures, and emergency response data systems).

B. Interim Compensatory Measures (ICMs) B.5.c, B.5.d, and B.5.e of Commission Orders of February 25, 2002, to all operating commercial nuclear power plants, relating to security-based emergency plans and preparedness.[5]

C. 44 CFR Parts 350, 351, and 352, including applicable FEMA policies, REP-series guidance documents and associated memoranda, as they relate to offsite radiological emergency planning and preparedness.

Footnotes:

[3]The applicable emergency planning requirements for applications submitted pursuant to 10 CFR Part 52 are contained in both 10 CFR Part 52 and 10 CFR Part 50, and the specific cross-references are provided in the respective sections.

[4] NRC Bulletin 2005-02 outlined enhancements to emergency preparedness programs in response to the potential for security events. The Nuclear Energy Institute (NEI) White Paper, entitled "Enhancement to Emergency Preparedness Programs for Hostile Actions," dated November 18, 2005, was endorsed by the staff in RIS 2006-12, which outlines industry actions in support of the implementation of these enhancements.

[5] See also, SECY-06-0098, "Licensee Response to Demand for Information Regarding Mitigation Strategies Required Under Section B.5.b of the Orders Dated February 25, 2002, and Staff Recommendations for Follow-up Action," issued May 2, 2005 (Safeguards document).

DCD Content

- Emergency planning and communication interfaces.
- Locations of:
  - Main Control Room (MCR).
  - Technical Support Center (TSC).
  - Operational Support Center (OSC).
  - Decontamination facilities.

U.S.NRC
United States Nuclear Regulatory Commission
Protecting People and the Environment

366

FYI: The DCD was ½ page. The SER was 25 pages. The DCD makes a lot of references to other sections. The Staff's SER pulls them all together in their discussion.

DCD Content:

- States that the emergency planning and communication interfaces among the MCR, TSC and the emergency planning centers are the responsibility of the Combined License applicant.

- References DCD subsection 1.2.5 for locations of the TSC, OSC and the decontamination facilities.

DCD Content (cont.)

- Description of HVAC systems supporting EP.
- Human system interface design requirements.

U.S.NRC
United States Nuclear Regulatory Commission
Protecting People and the Environment

367

FYI: The DCD was ½ page. The SER was 25 pages. The DCD makes a lot of references to other sections. The Staff's SER pulls them all together in their discussion.

DCD Content:

- References Section 9.4 for a description of the HVAC systems for the MCR, TCS and the annex building.
- References Section 18.8 for the human system interface design requirements for the TSC and OSC.
- References Section 7.5 for identification of plant variables that are provided for interface to the emergency planning areas.

DCD Content (cont.)
Tier 1 Information

- DCD Tier 1, Section 3.1 provides design description for:
  - TSC, MCR, and OSC.
  - Inspections, Tests, Analyses, and Acceptance Criteria (ITAAC).

U.S.NRC
United States Nuclear Regulatory Commission
Protecting People and the Environment

368

DCD Tier 1:

- Tier 1, Section 3.1, Emergency Response Facilities, provides a very brief 6 line design description of the TSC, MCR, and OSC, and provides ITAACs in Table 3.1-1. There are 6 ITAACs for the TSC floor space, TSC voice communication equipment, minimum inventory for retrievable plant parameters in the TSC, OSC voice communication equipment with MCR and TSC, inspection of TSC and OSC location, and habitable work environment.

Requests for Additional Information (RAIs)

- Three RAIs addressed concerns

RAI 472.001

Address applicability of Reg. Guide 1.101, "Emergency Planning and Preparedness".

Westinghouse Response:

Does not apply to the DCD. Will be addressed during COL application.

U.S.NRC
United States Nuclear Regulatory Commission
Protecting People and the Environment

369

RAI 472.001 – Applicability of Reg. Guide 1.101 to DCD
Table 1.9-1 (Sheet 8 of 15) indicates that RG 1.101, "Emergency Planning and Preparedness" Revision 3, August 1992), "...is not applicable to AP1000 design certification." The staff agrees Revision 3 to RG 1.101, which endorsed NUMARC NESP-007 as an alternative methodology for developing emergency action levels, is not applicable to the **AP1000 DOD** and will be a combined license (COL) applicant item. However, Revision 2 to RG 1.101, which endorsed the NUREG-0654 criteria for the development of emergency plans, includes emergency response facilities, (Technical Support Center, Operational Support Center, Decontamination Facilities) should be included in the AP1 000 DCD. Why doesn't Table 1.9-1 include RG 1.101, Revision 2 (appears to contradict Appendix 1 A, page 1 -A-35, were it is indicated that AP1000 position is to "conform" to Revision 3)?

Westinghouse Response:
Table 1.9-1 is a table that simply indicates where in the Design Control Document a Regulatory Guide is discussed if it applies to AP1000 Design Certification. As indicated in Table 1.9-1 and RAI 472.001, RG 1.101 does not apply to Design Certification and will be addressed during the Combined License (COL) application process. The revision referenced (3) in Table 1.9-1 is the latest revision issued by NRC. As with all other Regulatory Guides listed in Table 1.9-1, the revision listed is considered to include or supersede requirements in all earlier revisions. In the case of RG 1.101, Revision 3 does continue to include the NRC endorsement of NUREG-0654 similar to the endorsement of Revision 2. See Sections B and C of RG 1.101, Revision 3. In addition, both Appendix 1 A, which delineates AP1 000 conformance to Regulatory Guides, and Section 13.3.1, which describes the COL information item related to emergency planning, specifically call out NUREG-0654. The clarification paragraph in Appendix **1A** for RG 1.101 provides a historical perspective on the NRC endorsement of NUREG-0654, but the overall entry for RG 1.101 cites Revision 3 as the current revision. In addition, Sections 18.8.3.5, 18.8.3.6 and 18.8.3.9 discuss the design of emergency response facilities. Section 18.2.6 is another **COL** information item that addresses design of emergency response facilities. Emergency response facilities will be properly and adequately addressed during the **COL** application process.

Requests for Additional Information (RAIs) cont.

RAI 472.002

Address decontamination facilities in Hot Machine Shop.

Westinghouse Response:

Provided a description of the decontamination facilities in the Hot Machine Shop.

U.S.NRC
United States Nuclear Regulatory Commission
Protecting People and the Environment

370

RAI 472.002 –Address decontamination facilities in Hot Machine Shop:

Question:

Figure 1.2-18, shows the Hot Machine Shop. Section 1.2.5 indicates that the Hot Machine Shop includes decontamination facilities. However, no such facilities are depicted on the figure. Explain the portable Decontamination System including it's location, use, etc., as well as other equipment and facilities, such as showers, that would be used for decontamination operations.

Westinghouse Response:

Room 40358, the Hot Machine Shop, includes a variety of equipment for servicing radiological controlled area equipment, including a lathe, a power hacksaw and power band saw. Also included is a diked decontamination basin with a grating support floor, connected to the radioactive waste drain system. A contaminated component can be supported off the grating and washed down with demineralized water to effect sufficient decontamination. This decontamination basin is about 8 feet by 8 feet and its edges are located about 4 feet and 6 feet from the south and west walls of Room 40358 respectively. The decontamination basin is a permanent part of Room 40358.

The "portable decontamination system" is a cart with a source of water, tools, swabs, clothes, other water collection and cleaning devices. It, like the standard machine tools in Room 40358, are to be purchased by the Combined License holder to specifications of their choosing to be compatible with their operating and maintenance practices.

Note that decontamination of people will be performed in Room 40355, Decontamination room, which included two personnel showers and two sinks connected to the radioactive liquid waste system.

Requests for Additional Information (RAIs) cont.

RAI 472.003

Is TSC also isolated when Main Control Room is isolated on high-high radiation monitors?

Westinghouse Response

No, only the Main Control Room is isolated.

– Follow-up question on incorrect statements and inconsistencies on design were answered.

U.S.NRC
United States Nuclear Regulatory Commission
Protecting People and the Environment

371

RAI 472.003 – Effect of increased reactor coolant activity on inhalation exposures to plant personnel:

Question:

Section 9.4.1.2.1.1 indicates that radiation monitors are located inside the main control room upstream of the supply air isolation valves and that these monitors isolate the main control room form the nuclear island non-radioactive ventilation system on high-high particulate or iodine radioactivity concentrations. Does this include isolating the technical support center as well?

Westinghouse Response:

No, only the main control room is isolated on a high-high signal. At that time, the main control room emergency habitability system is placed into operation to protect the main control room operators. Please refer to the "Abnormal Plant Operation" portion of DCD subsection 9.4.1.2.3.1, which provides details as to the operation of the main control room and technical support center HVAC subsystem during abnormal events involving high and high-high signals.

Also see **DCD** subsection 18.8.3.5 "Technical Support Center Mission and Major Tasks" for discussions of the technical support center (TSC) including habitability and evacuation during emergencies.

SER Evaluation Findings

- Provides evaluation of EP and interfaces
  - EP responsibilities.
  - Description of facilities.
  - TSC size, habitability, evacuation.
  - Isolation of MCR from TSC.
  - Radiation exposure.

U.S.NRC
United States Nuclear Regulatory Commission
Protecting People and the Environment

372

FYI: The DCD was ½ page. The SER was 25 pages. The DCD makes a lot of references to other sections. The Staff's SER pulls them all together in their discussion.

SER Content:
The SER provides a good detailed review of all DCD referenced sections that support EP.

- Provides an extensive evaluation of Emergency Planning concerning the interfaces referenced in the DCD.
- Emergency planning responsibilities
- TSC/OSC/Decontamination facility
- General description of facilities
- TSC size, habitability, ventilation system, TSC as a vital area, TSC evacuation
- Isolation of MCR from TSC
- Post-accident sampling and analysis
- Radiation Exposure

SER Evaluation Findings (cont.)

- COL applicant will be the primary party addressing EP.
- DCD information for TSC, OSC, and decontamination room is consistent with the guidance identified in RG 1.101.
- DCD information for TSC size and habitability is consistent with the guidance identified in RG 1.101.

U.S.NRC
United States Nuclear Regulatory Commission
Protecting People and the Environment

373

13.3.4 Overall Emergency Planning Findings
The following sections summarize the staff's EP findings.

13.3.4.1 Emergency Planning Responsibilities (Section 13.3.2 of the SER)
The staff concludes that the COL applicant referencing the AP1000 design will be the primary party addressing EP, and that EP information submitted in the application will largely depend on plant- and site-specific characteristics. As such, the staff finds that COL Action Item 13.3-1 is acceptable, in that it complies with the requirements set forth in 10 CFR 52.79(d) and the applicable portions of 10 CFR Part 50. It is consistent with the extent to which certain EP design features, facilities, functions, and equipment are more appropriately addressed by the COL applicant.

13.3.4.2 General Description of Facilities (Section 13.3.3.1 of the SER)
The staff concludes that the information provided in the DCD pertaining to the TSC, OSC, and decontamination room is consistent with the guidance identified in RG 1.101. As such, the staff finds this information meets the applicable requirements of 10 CFR 50.34(f)(2)(xxv), 10 CFR 50.47(b)(8), 10 CFR 50.47(b)(11), and Subsections IV.E.3 and IV.E.8 to 10 CFR Part 50, Appendix E.

13.3.4.3 Technical Support Center Size (Section 13.3.3.2 of the SER)
The staff concludes that the information provided in the DCD pertaining to TSC size is consistent with guidance identified in RG 1.101. Specifically, the size conforms with the specifications of NUREG-0696 and is sufficient to accommodate and support NRC and licensee predesignated personnel, equipment, and documentation, in conformance with Supplement 1 to NUREG-0737. As such, the staff finds that this information meets the applicable requirements of 10 CFR 50.47(b)(8) and Subsection IV.E.8 to 10 CFR Part 50, Appendix E.

13.3.4.4 Technical Support Center Habitability (Section 13.3.3.3 of the SER)
The staff concludes that the information provided in the DCD pertaining to habitability of the TSC is consistent with the guidance identified in RG 1.101. As such, the staff finds that the DCD meets the applicable requirements of 10 CFR 50.34(f)(2)(xxv), 10 CFR 50.47(b)(8) and (b)(11), and Subsection IV.E.8 to 10 CFR Part 50, Appendix E.

SER Evaluation Findings (cont.)

- DCD information for control of radiation exposures during post-accident sampling is acceptable

U.S.NRC
United States Nuclear Regulatory Commission
Protecting People and the Environment

374

13.3.4.5 Post-accident Sampling and Analysis - Radiation Exposure (Section 13.3.3.4.2 of the SER)
The staff concludes that the information provided in the AP1000 DCD pertaining to controlling radiation exposures to individuals involved in post-accident sampling is acceptable and meets the applicable requirements of 10 CFR 50.34(f)(2)viii), 10 CFR 50.47(b)(8), 10 CFR 50.47(b)(9), and 10 CFR 50.47(b)(11).

SER Evaluation Findings (cont.)

- SRP criteria acceptable for:
  - The emergency planning responsibilities
  - The general description of the facilities
  - The TSC size
  - The TSC habitability
  - The post-accident sampling and analysis

U.S.NRC
United States Nuclear Regulatory Commission
Protecting People and the Environment

375

• Based on the information supplied by the applicant, the staff concluded that the emergency planning meets the applicable provisions described in SRP Section 13.3 for:

- The emergency planning responsibilities
- The general description of the facilities
- The TSC size
- The TSC habitability
- The post-accident sampling and analysis

COL Items

- Emergency plan
  - Develop an emergency plan for the site (13.3-1).
- Activating the emergency facilities
  - Develop the criteria for activating the emergency operations facility consistent with FEMA guidance (13.3-2).

U.S.NRC
United States Nuclear Regulatory Commission
Protecting People and the Environment

376

- 13.3-1 The COL applicant will develop an emergency plan for the site including post-72 hour actions and its communication interface. The reference to post-72 hour actions is associated with the 72-hour battery bank which is used for loads requiring power for 72 hours following an event or loss of all ac power sources concurrent with a design basis accident.

- 13.3-2 The COL applicant will develop the criteria for activating the emergency operations facility consistent with current operating practice and NUREG-0654/FEMA-REP-1, “Criteria for Preparation and Evaluation of Radiological Emergency Response Plans and Preparedness in Support of Nuclear Power Plants”.

AP1000 Generic Issues (Systems)

Module 14
SER Section 20

INSTRUCTOR: Scott Newberry
October 2008

There are two Generic Issues modules. This module will focus on issues associated with AP1000 systems. Next weeks module will be more in line with engineering issues.

Learning Objectives

- Class Participants are expected to understand:
  - NRC Design Certification requirements for GSIs.
  - Content of application for types of GSIs.
  - The NRC review process.
  - Approval basis for significant AP1000 issues including some examples.

U.S.NRC
United States Nuclear Regulatory Commission
Protecting People and the Environment

378

Read through each of the objectives.

The NRC SER Chapter 20, in addition to references, is a very good reference. NUREG 0933 is the primary reference for all of these issues. In some cases Commission SECY papers were needed to develop the policy on issues since resolution required a new regulatory approach or regulation.

This module focuses on systems issues. Next week we will focus on engineering issues.

NRC Requirements

- 10 CFR 52.47(a)requires that information be submitted in the design certification application:
  - Demonstrated Compliance with Three Mile Island requirements.
  - Proposed Resolutions for Unresolved Safety Issue and Generic Safety Issues.
- 10CFR 52.47 uses NUREG 0933 as the fundamental reference to list and describe all of these issues.

U.S.NRC
United States Nuclear Regulatory Commission
Protecting People and the Environment

379

The NRC generic issues requirements for new reactors like the AP1000 in Part 52 are very explicit and are backed up by very good references.

Continue to read through the following which parallels the slide.

The Design Certification applicant is required by Part 52 to provide:

> (8) The information necessary to demonstrate compliance with any technically relevant portions of the Three Mile Island requirements set forth in 10 CFR 50.34(f), except paragraphs (f)(1)(xii), (f)(2)(ix), and (f)(3)(v).
>
> (21) Proposed technical resolutions of Unresolved Safety Issues and medium- and high-priority generic safety issues which are identified in the version of NUREG–0933 current on the date up to 6 months before the docket date of the application and which are technically relevant to the design.

10 CFR 50.34(f), which addresses the contents of license applications under Part 50, includes the list of TMI action items—with a couple of paragraphs that are not applicable.

NUREG-0933 is a very large document which catalogues that status of generic issues and their resolution. This requirement is focused on the most important of these issues.

Commission Policy

- SRM, dated February 15, 1991, concerning SECY-90-377.
- Design Certification must preserve operating experience.
- Operating experience, backed by studies using risk information and defense in depth principles, have shown that additional actions are necessary to ensure safety.

U.S.NRC
United States Nuclear Regulatory Commission
Protecting People and the Environment

380

Read through these points which paraphrase the slide.

The NRC policy and requirements to ensure that new reactors correct the problems from the past is made clear by the Commission in this directive.

In a staff requirements memorandum related to "Requirements for Design Certification Under 10 CFR Part 52," the Commission directed the staff to ensure that the DC process preserves operating experience insights in the certified design.

The NRC policy and requirements emphasize the inclusion of operating experience and the resolutions of past issues whose roots are in operating experience.

The rest of this presentation is intended to describe the AP1000 application that responds to these requirements and the staff review process for the application.

Generic Issue Summary

• Generic Safety Issue	41	15%
• New GSI	41	15%
• TMI Action Plan Item	68	25%
• Human Factors	5	2%
• Bulletins	43	16%
• Generic Letters	78	28%
	276	100%

U.S.NRC
United States Nuclear Regulatory Commission
Protecting People and the Environment

381

We developed a summary table from the AP1000 DCD and NRC SER and the results are shown here. This slide identifies each of the issues by category that are derived from NRC Commission direction and NRC requirements. There are a total of 276 issues that needed to be addressed by the AP1000 applicant. You can see how these issues break down:

Generic Issues are particular concerns or questions that have been investigated through the formal NRC process and actions are identified to resolve the issue. These include USIs and older issues identified over the years.

The TMI and Human Factors items go back to the lessons learned from TMI that are rather well documented in the referenced NRC reports.

Bulletins (BL) and Generic Letters (GL) are particular letters to reactor licensees from the NRC requesting or requiring action.

I will illustrate several types of these issues later in this presentation.

There is a summary table in your manual. Some of the important issues resolved for the AP1000 are:

USIs such as the containment sump and station blackout.
BLs such as effectiveness of the ultimate heat sink and ESF controls.
GLs such as natural circulation cooldown and effects of DC power failure on ECCS.
GSIs such as GSI 189 involving containment severe accident issues.

Let us proceed to discuss the resolution of some of these issues for the AP1000.

DCD Proposed Resolution

- An applicant has several options to resolve one of these issues:
  - Demonstrate resolution for the proposed design.
  - Demonstrate that the issue does not apply.
  - Require an action for the COL applicant.
- Most were resolved through the design although about 30% require COL action.

U.S.NRC
United States Nuclear Regulatory Commission
Protecting People and the Environment

382

Read the slide to show the options for resolution.

We can look at this in more detail on the next slide.

Issues Identified by the NRC

- Most issues were resolved through the AP1000 design

– Not Applicable	35	13%
– Resolved Issues:	241	87%
– RAI	7	3%
– Open Item	16	6%
– COL Action Items Issues:	85	31%

- Several issues required staff investigation and requests for additional information (There were 23 of these issues. In this module we have listed those issues that relate to AP1000 Systems and Security).

U.S.NRC
United States Nuclear Regulatory Commission
Protecting People and the Environment

383

The purpose of this slide is to provide you some insight on the number of issues and the way they were resolved.

Read through the slide.

Generic Issues-NRC review

- Hydrogen control measures, effects of hydrogen burns on safety equipment, and hydrogen recombiner capability.
- ATWS requirements and quality of equipment.
- Inadequate core cooling.
- Control room habitability.
- Upgrade Licensee Emergency Support Facilities.
- Systems interactions.
- Reconsideration of nuclear power plant security requirements.

U.S.NRC
United States Nuclear Regulatory Commission
Protecting People and the Environment

384

Reviewing the NRC SER, a list of systems and security issues that were of special interest/concern to the NRC staff was generated and are located in your training material.

All of the issues that the NRC pursued in their review by requesting additional information are listed there. I have listed the major issues pursued by the staff on this slide.

Walk through the slide paraphrasing each issue.

Many of the staff's questions related to how the issues related to the unique characteristics of the design such as the passive systems and digital instrumentation and controls.

The last few issues listed on security are primarily related to the increased focus on security by the NRC.

All of this information is documented in the NRC SER issues by issue. Each resolution takes into account the particular requirements of Part 50 and NRC policy for new reactors.

I will now go through **examples** of each of these showing how Westinghouse resolved the issue. They are the issues shown in bold lettering on this viewgraph.

ATWS

- NRC Requirements: 10 CFR 50.62
  - Auxiliary Feedwater and Turbine Trip.
  - Diverse SCRAM.
- Resolution:
  - AP1000 DAS.
  - LOFTRAN Analysis of Loss of Feedwater.

U.S.NRC
United States Nuclear Regulatory Commission
Protecting People and the Environment

385

•Introduce the slide: There is a very long history to the generic issue, categorized as A-9. I have summarized the resolution on this slide. The issue goes back for more than 30 years to the back fit of requirements on operating reactors in 10 CFR 50.62. An ATWS is an expected operational occurrence (e.g., loss of feedwater, loss of condenser vacuum, or loss of offsite power (LOOP) to the reactor) that is accompanied by a failure of the RTS to shut down the reactor.

Read the following which parallels the slide:

NRC Requirements: **1)**10 CFR 50.62(c)(1) requires that equipment must automatically initiate emergency feedwater (EFW) and a main turbine trip under conditions indicative of an ATWS. This equipment must function reliably and must be diverse and independent from the RTS. **2)**10 CFR 50.62(c)(2) requires that the plant have a scram system that is diverse and independent from the existing RTS.

The staff, in this case, required that an ATWS analysis be performed to demonstrate that its ATWS response is consistent with that considered by the staff in its formulation of the 10 CFR 50.62 design requirements for current plant designs.

Resolution: The applicant indicated that the AP1000 design complies with the requirements of 10 CFR50.62 by incorporating a diverse actuation system that includes the ATWS mitigation system actuation circuitry (AMSAC) protection features mandated by 10 CFR 50.62 by tripping the turbine and diversely actuating selected engineered safeguards functions. The applicant provided the analysis of a complete loss of normal feedwater without reactor trip using the LOFTRAN code. Section 15.2.9 of the SER provides a detailed discussion of this issue.

System Interaction

- The issue: The need to investigate the potential that unrecognized subtle dependencies, or systems interactions, among SSCs in a plant could lead to safety-significant events.
- NUREG-1174, “Evaluation of Systems Interactions in Nuclear Power Plants.”
- WCAP-15992 reviewed as part of RTNSS review.

U.S.NRC
United States Nuclear Regulatory Commission
Protecting People and the Environment

386

Read the description of the issue on the slide.

Resolution:

AP600 was the subject of a systematic evaluation of potential adverse system interactions (ASIs), as documented in WCAP-14477, “The AP600 Adverse System Interaction Evaluation Report.” Westinghouse stated that the conclusions of WCAP-14477 are applicable to the AP1000 because the fluid system design for the AP1000 is the same as that used in the AP600.

The staff raised questions on this report. WCAP-15992 was submitted to identify possible adverse interactions among safety-related systems and between safety-related and non-safety-related systems, and to evaluate the potential consequences of such interactions. A structured methodology was proposed and implemented to confirm that there were to unrecognized dependencies. The staff reviewed this issue as part of the regulatory treatment of non-safety systems (RTNSS) described in Chapter 22 of the SER and concluded that the issue was resolved.

The systems interaction study in 15992 looked for:

Functional Interactions - interactions among the passive safety systems, and interactions between passive safety systems and active non-safety-related systems.
Human Commission Errors - interaction resulting from operator errors of commission.
Spatial Interactions - interactions that could occur as a result of equipment location in the plant.

None were identified from a robust analysis supported by the PRA, a spatial review, and examination of opportunity for human error.

After reading the slide conclude that:

The primary reason for the resolution is the separation of safety and non-safety systems in the plant employing lessons from the past. The studies confirmed this.

Inadequate Core Cooling

- The issue:
  - Unambiguous indication of Inadequate Core Cooling (ICC),
- Resolution:
  - AP1000 design concept automatically trips the RCPs and initiates passive systems.
  - The AP1000 does not rely on a reactor vessel level indication system as do existing reactors.
  - AP1000 hot-leg level indication is a safety-related level indication system.
  - The core exit thermocouples and the subcooling margin monitoring together unambiguously indicate an approach to ICC.

U.S.NRC
United States Nuclear Regulatory Commission
Protecting People and the Environment

387

This is one of the major TMI action items that lead to modifications at all operating reactors.

I have tried to outline the major elements of the issue and the resolution: The AP1000 employs different systems and safety concepts to deal with this issue that were reviewed carefully by the staff.

Read through the following which parallels the slide.

The issue: Instruments must be provided in the MCR that provide an unambiguous indication of inadequate core cooling (ICC), such as primary coolant saturation meters in PWRs, and a suitable combination of signals from indicators of coolant level in the reactor vessel and in-core thermocouples.

Resolution:
AP1000 design concept is different from current operating plants in that the AP1000 design automatically trips the RCPs and initiates safeguard injections through the passive safety systems such as the CMT, ADS, PRHR, and IRWST to maintain core cooling in the event of a SBLOCA. The AP1000 does not rely on a reactor vessel level indication system as do existing reactors, where reactor vessel level indication is important for operator actions to trip the RCPs, to monitor coolant mass in the vessel, and to manually depressurize the RCS in the event of ICC. Unlike operating reactors, AP1000 hot-leg level indication is a safety-related level indication system, which consists of separate pressure taps that connect to the bottom of the hot leg and to the top of the hot-leg bend leading to the SG. The staff determined that for the AP1000 design, the core exit thermocouples and the subcooling margin monitoring together would unambiguously indicate an approach to ICC, and the safety-related hot-leg level indication is used only to terminate the recovery action in the ERGs for the ICC event.

Resolved by an Action Item for COL Applicant

- Qualification of reactor operators: GL 80-026.
- Testing of safety-related logic circuits: GL 96-01.
- Erosion/corrosion induced pipe wall thinning: GL 89-08.
- ECCS Sump Screen Blockage-GSI 191.

U.S.NRC
United States Nuclear Regulatory Commission
Protecting People and the Environment

388

On this slide I have listed three issues that were resolved through COL Action items.

Read through the following:

Qualification of Reactor Operators GL 80-026
This GL sets forth revised criteria for staff use in evaluating reactor operator training. Westinghouse stated that this GL is the responsibility of the COL applicant. This is part of COL Action Item 20.7.1-1. The staff accepted this resolution for the AP1000 design.

Testing of Safety Related Logic Circuits GL 96-01
This GL addresses problems with the testing of safety-related logic circuits. A number of NRC regulations document the requirements to test safety-related systems to ensure that they will function as designed when needed. The applicant addressed testing of safety-related logic circuits in DCD Tier 2, Sections 7.1.2 and 13.5. However, comparing electrical schematic drawings and logic diagrams against plant surveillance test procedures to ensure that the surveillance procedures fulfill the TS requirements is the responsibility of the COL applicant. This is COL Action Item 20.7.4-10.

Erosion/Corrosion Induced Pipe wall Thinning GL 89-08
This GL requests information on the long-term erosion/corrosion monitoring program to ensure the maintenance of the structural integrity of all high-energy carbon steel systems. The applicant stated that this GL is a surveillance issue, which it discusses in DCD Tier 2, Sections 5.4.3.4 and 10.3.6. DCD Tier 2,Section 10.1.3, indicates that this issue is the responsibility of the COL applicant and that the COL applicant would prepare an erosion/corrosion surveillance program using industry guidelines. This is COL Action Item 10.5-1. The staff agreed with this assessment.

GSI 191 Clogging of Recirculation Screens
At the time of the AP1000 certification the staff stated that it is currently resolving a similar suction screen blockage issue for the current generation of PWRs in conjunction with GSI 191. Section 6.2.1.8 of the staff SER provides the staff's evaluation of the design of the IRWST and containment recirculation screens in the context of Issue 191. This is COL Action Items 6.2.1.8.1-1 and 6.2.1.8.1-2. Based on these actions the staff considered the issue resolved. The issue has since been re-opened at the request of Westinghouse and is under review by the staff at the time of preparing this presentation. We understand that this issue is the subject of interest to NNSA.

Some Issues Were Not Applicable

- Diesel reliability: B-56.
- Operability of ADS valve pneumatic supply: BL 80-01.
- RCO seal failure and effects on station blackout events: GL 91-07.

U.S.NRC
United States Nuclear Regulatory Commission
Protecting People and the Environment

389

This slide gives three examples where Westinghouse documented that this issue is not applicable to the AP1000.

Read through the following:

Diesel Reliability B-56
Issues that result in a LOOP necessitate reliance on the onsite emergency DGs for successful accident mitigation. Improving the starting reliability of onsite emergency DGs can reduce the probability of events that could lead to a core-melt accident. The AP1000 design does not require AC power for accident mitigation. Therefore, the AP1000 DGs are non-Class 1E and their reliability is founded on industry standards and practices. Therefore, Issue B-56 is not applicable to the AP1000 design.

Operability of ADS Valve Pneumatic Supply BL 80-01
The NRC issued this BL only to BWR licensees to determine the operability of the pneumatic operator for the ADS; however, the AP1000 design has an ADS similar to that in BWRs. In WCAP-15800, Revision 3, the applicant stated that the AP1000 design uses a safety-related ADS that differs from that presently used on BWRs. The AP1000 ADS uses safety-related dc MOVs and squib valves to initiate depressurization. The motive power for these valves is safety-related DC power. The operation of these valves does not rely on any non-safety-related equipment or instrumentation, including instrument air or nitrogen supply. These valves are designed and qualified to function in the conditions of an accident. They will also be the subject of preoperational and inservice testing, and they will be part of the RAP. This BL is not applicable to the AP1000 design.

RCO Seal Failure and its Possible effects on Station Black Out events GL 91-07
GL 91-07 informs licensees of the possible effect of GSI 23 on their responses to the SBO rule. In WCAP-15800, Revision 3, Westinghouse stated that this GL is not applicable to the AP1000 design because the design of the AP1000 reactor coolant pumps obviates the need for reactor coolant pump seals, as discussed in DCD Tier 2, Sections 5.1.3.3 and 1.9.4.2.3. The staff agreed with the applicant's assessment. This GL is not applicable to the AP1000 design.

Issue Resolution

- The NRC requires significant study and demonstration in the application regarding generic issues.
- Chapter 1 of the application and Chapter 20 of the SER document the resolution of these issues.
- Most issues were not applicable or resolved; about 30 issues need work by the COL applicant.
- Some additional tables categorizing the type of resolution of these issues are provided in your manual.

U.S.NRC
United States Nuclear Regulatory Commission
Protecting People and the Environment

390

Read through the slide.

AP1000 Engineering Topics

Module 15
SER Sections 3.1 and 3.2

INSTRUCTOR: Jack Strosnider
October 2008

U.S.NRC
United States Nuclear Regulatory Commission
Protecting People and the Environment

1

Learning Objectives
SER 3.1: General Design Criteria

- Class Participants are expected to understand:
  - Gain familiarity with the GDC.
  - Role of GDC as part of the bases for regulatory approval.

U.S.NRC
United States Nuclear Regulatory Commission
Protecting People and the Environment

2

State the learning objectives on the slide.

General Design Criteria (GDC)

- 10 CFR 50 App A provides GDC.
- GDC establish high level requirements for SSCs important to safety.
- GDC address:
  - Design
  - Fabrication
  - Construction
  - Testing
  - Performance
- Section 3.1 of the DCD addresses AP1000 conformance with the GDC.

U.S.NRC
United States Nuclear Regulatory Commission
Protecting People and the Environment

3

10 CFR 52 requires that applications must include “The principal design criteria for the facility.”

Appendix A, General Design Criteria for Nuclear Power Plants” establishes the minimum requirements for the principal design criteria.

Note that throughout my presentations I will refer to the GDC and Applicable Regulations. The GDC are, in fact, regulations, but I refer to them separately because of their importance. They establish the highest level engineering design criteria. The NRC staff review and approval is based on determining that the design conditions, design loads, design methods and design acceptance criteria will result in a facility that satisfies the GDC.

General Design Criteria (GDC)

GDC groupings:

- Overall requirements (1 – 5).
- Protection by multiple fission product barriers (10 – 19).
- Protection and reactivity control systems (20 – 29).
- Fluid systems (30 – 46).
- Reactor containment (50 – 57).
- Fuel and reactivity control (60 – 64).

U.S.NRC
United States Nuclear Regulatory Commission
Protecting People and the Environment

4

The GDC address these areas.

The GDC establish important design concepts such as:

Single Failure Proof.

Redundancy.

Diversity.

As well as design conditions and events that must be considered, e.g., weather related conditions and seismic events.

General Design Criteria (GDC)

- Applications must demonstrate and the NRC must conclude that the proposed facility meets the GDC.
- This is accomplished by satisfying applicable:
  - Regulations.
  - Regulatory guidance.
  - Codes and standards.

U.S.NRC
United States Nuclear Regulatory Commission
Protecting People and the Environment

5

Throughout the SER the staff provides its evaluation of:

Design conditions,
Design loads,
Design methods, and
Design acceptance criteria.

With a focus on how these areas satisfy the GDC.

This is the basis for NRC staff review and approval.

The regulations (10 CFR 50), regulatory guides and the Codes and Standards they reference establish design, fabrication, inspection and testing requirements that will ensure the GDC are met.

General Design Criteria (GDC)

Passive design and the GDC:

- GDC 17: Electrical Power from the Transmission Network to Onsite Electric Distribution System is not Required.
- GDCs 34, 35, and 38: Decay Heat Removal Capability is Provided Without Relying on Nonsafety-related AC (Offsite) Power.
- GDC 41: The Containment Atmosphere Cleanup System has no Safety-related Post-accident Cleanup Functions.

U.S.NRC
United States Nuclear Regulatory Commission
Protecting People and the Environment

6

All GDC may not be appropriate for all plants. Departures from the GDC are acceptable if identified and justified.

These exemptions from the GDC apply to the AP1000 because of its passive design features.

They are covered in detail in other modules, but some examples are listed.

GDC 17 (Electric Power Systems)
The AP1000 plant design supports an exemption to the requirement of GDC 17 for two physically independent offsite circuits by providing safety-related E systems for core cooling and containment integrity, and multiple nonsafety-related onsite and offsite electric power sources for other functions. See Section 6.3 for additional information on the systems for core cooling. A reliable dc power source supplied by batteries provides power for the safety-related valves and instrumentation during transient and accident conditions. The Class 1E dc and UPS system is the only safety-related power source required to monitor and actuate the safety-related passive systems. Otherwise, the plant is designed to maintain core cooling and containment integrity, independent of nonsafety-related ac power sources indefinitely.

GDCs 34 (Residual Heat Removal), 35 (Emergency Core Cooling), 38 (Containment Heat Removal System), and 44 (Cooling Water)
Each of these GDC contain the requirement that:
" ….capabilities shall be provided to assure that for onsite electric power system operation (assuming offsite power is not available) and for offsite electric power system operation (assuming onsite power is not available) the system safety function can be accomplished assuming a single failure."
These GDCs are met by providing the capability to remove decay heat without relying on nonsafety-related ac power.

GDC 41: (Containment Atmosphere Cleanup)
Dose mitigation is passively provided by the containment isolation and integrity, natural removal processes, and limited containment leakage.

General Design Criteria (3.1) Summary

- GDC establish high level requirements for SSCs important to safety.
- Meeting the GDC is a fundamental requirement for approval of a new reactor.
- NRC staff review focuses on how the application demonstrates the GDC and regulations are met.
  - Through application of appropriate regulations and guidance including codes and standards.

U.S.NRC
United States Nuclear Regulatory Commission
Protecting People and the Environment

7

Read the summary points on the slide.

Learning Objectives
SER 3.2 Classifications of SSCs

- Class Participants are expected to understand:
  - The AP1000 classification system.
  - The importance of proper classification of SSCs in supporting regulatory approval.
  - Focus of the staff review.

U.S.NRC
United States Nuclear Regulatory Commission
Protecting People and the Environment

8

Several different classifications systems exist.

We'll discuss them briefly and then see how the AP1000 classification system incorporates them.

Proper classification of SSCs is important to assuring they are designed, fabricated, erected and tested to quality standards commensurate with their function.

Classification Systems

- Seismic categories.
- NRC quality groups.

U.S.NRC
United States Nuclear Regulatory Commission
Protecting People and the Environment

9

Seismic and quality group classification have significant implications for how SSCs are designed, fabricated, erected and tested.

Seismic Classification

- Ensures SSCs:
  - Have quality commensurate with their functions (GDC 1).
  - Are designed to withstand earthquakes without loss of function (GDC 2).
  - Provide safety of radioactive waste systems (GDC 61).

U.S.NRC
United States Nuclear Regulatory Commission
Protecting People and the Environment

10

Proper seismic classification ensures that the applicable GDC are met.

Applicable Regulatory Guides (RG)

- RG 1.29 for seismic design classification.
- RG 1.151 for instrumentation sensing lines.
- RG 1.143 for radioactive waste management SSCs.
- RG 1.189 for fire protection systems.

U.S.NRC
United States Nuclear Regulatory Commission
Protecting People and the Environment

11

Standard Review Plan 3.1 describes these regulatory guides as providing acceptable guidance for seismic classification.

The staff uses these regulatory guides to evaluate the acceptability of the applicants seismic classifications.

Seismic Category I

- Safety-related systems:
  - Withstand seismic and other loads without loss of function.
  - Protected from interaction with non-seismic SSCs.
  - Meet 10 CFR 50, App B.

U.S.NRC
United States Nuclear Regulatory Commission
Protecting People and the Environment

12

Seismic Category I includes safety-related SSCs and requires that they withstand combinations of seismic and other loads and still function.

Seismic Category II

- Perform no safety function.
- Designed to prevent failure that would: degrade safety related SSC functions or incapacitate operators in the CR.
- Portions of App B to preclude unacceptable impact on Seismic Category I SSCs.

U.S.NRC
United States Nuclear Regulatory Commission
Protecting People and the Environment

13

Seismic Category II is for non safety SSCs.

They perform no safety functions, but they receive an appropriate level of design to preclude their failure from impacting safety related equipment and functions.

Note that there is a graded approach.

Functionality of Seismic Category I SSCs must be preserved, but functionality of Seismic Category II SSCs is not important and is not preserved. Seismic Cat II SSCs must be designed not to adversely impact Cat I SSCs.

Seismic Categorization and design of SSCs is commensurate with the importance of the safety functions they perform.

This is consistent with GDC 1.

RG 1.29 lists SSCs that should be Seismic category I. The staff uses the guidance in the RG to review the seismic classifications of SSCs proposed by the applicant.

Quality Groups

- Ensure SSCs:
  - Are designed, fabricated, erected and tested to quality standards commensurate with their functions (GDC 1).
  - That criteria for proper quality group classification are provided in RG 1.26.

U.S.NRC
United States Nuclear Regulatory Commission
Protecting People and the Environment

14

Proper quality group classification ensures meeting GDC 1 regarding quality standards.

The NRC staff uses the guidance in RG 1.26 to evaluate the SSC quality group classifications proposed by the applicant.

NRC Quality Group A

- Unisolable portions of the RCPB.
- Must meet ASME Code Class 1.

U.S.NRC
United States Nuclear Regulatory Commission
Protecting People and the Environment

15

Similarly,

Like Seismic Classification, NRC Quality Group Classification also has a graded approach.

Quality Group A must meet ASME Code Class 1 which provides the highest level of integrity, and lowest probability of leakage for the RCPB.

Classes B and C have less stringent design requirements.

NRC Quality Group B

- Portions of ECCS, post accident containment heat removal, RX shutdown, residual heat removal, steam and feedwater.
- Must meet ASME Code Class 2.

U.S.NRC
United States Nuclear Regulatory Commission
Protecting People and the Environment

16

QG B must meet ASME Class 2 vs. Class 1.

NRC Quality Group C

- Water, steam and radioactive waste pressure vessels, heat exchangers, storage tanks and components not part of the RCPB.
- Must meet ASME Class 3.

U.S.NRC
United States Nuclear Regulatory Commission
Protecting People and the Environment

17

And QG C meets ASME Class 3.

AP1000 Classifications

Based on:

- Seismic categories per RG 1.29.
- 10 CFR 50.55A and RG 1.26 quality groups.
- ANSI N18.2.
- ANS 51.1.

U.S.NRC
United States Nuclear Regulatory Commission
Protecting People and the Environment

18

The AP1000 Classification System takes into consideration the classification requirements and guidance in all of these documents.

The general guidelines for safety classification in the ANSI and ANS standards are useful in the development of the AP1000 classification. The specific classifications for various structures, systems, and components included in Regulatory Guide 1.26 and ANSI 18.2 and ANS 51.1 are based on a nuclear power plant with active safety systems and are not necessarily appropriate for the passive safety systems of the AP1000.

AP1000 Classifications

AP1000 equipment Class A:

- Reactor coolant pressure boundary.
- Seismic Category I.
- NRC QG A.
- 10 CFR Parts 50 and 21, and App B.
- ASME Code Section III, Class 1.

U.S.NRC
United States Nuclear Regulatory Commission
Protecting People and the Environment

19

AP1000 Class A applies to:

- The reactor coolant system pressure boundary.
- Including the required isolation valves and mechanical supports.

This class has the highest integrity, and the lowest probability of leakage.

AP1000 Classifications

AP1000 equipment Class B:

- Containment boundary and SSCs that limit leakage of radioactive material following a design basis accident (DBA).
- Seismic Category I.
- 10 CFR 50 and 21, and App B.
- NRC QG B.
- ASME Section III Class 2 or Class MC.

U.S.NRC
United States Nuclear Regulatory Commission
Protecting People and the Environment

20

Examples of AP1000 Class B SCCS include:

- The containment boundary including penetrations and isolation valves.
- Piping that functions as the containment boundary such as the steam and feedwater system inside containment.
- The secondary shell of the steam generators.

These SSCs:

- Are Seismic Cat 1,
- Are NRC QG B,
- Must meet:
  - 10 CFR 50, Part 21 regarding reporting of defects,
  - App B Quality Assurance, and
  - ASME Code Class 2 or Class MC requirements for design, fabrication and testing.

AP1000 Classifications

AP1000 equipment Class C:

- SSCS that mitigate DBAs but for which minor leakage will not prevent them from functioning.
- 10 CFR 50 and 21, and App B.
- Seismic Category I (some exceptions).
- NRC QG C.
- ASME III, Class 3.

U.S.NRC
United States Nuclear Regulatory Commission
Protecting People and the Environment

21

Class C applies to other safety-related functions required to mitigate design basis accidents and other design basis events.

Minor leakage will not prevent Class C SSCs from meeting their safety-related functions.

Examples of Class C SSCs include:

- Accumulators.
- Injection piping from the accumulators to the reactor coolant system isolation check valves in the direct vessel injection line.
- Piping from the in-containment refueling water storage tank (IRWST) and recirculation screens to the reactor coolant system isolation check valves in the direct vessel injection line.
- Piping from the Stage 1, 2, and 3 automatic depressurization system valves to the IRWST including the spargers.

These SSCs:

- Are Seismic Cat 1 (with some exceptions described in the DCD).
- Are NRC QG C.
- Must meet:
  - 10 CFR 50, Part 21 regarding reporting of defects,
  - App B Quality Assurance, and
  - ASME Code Class 3 requirements for design, fabrication and testing.

AP1000 Classifications

AP1000 equipment Class D.

- Nonsafety-related SSCs that:
  - Directly prevent unnecessary actuation of passive systems.
  - Or provide support to those SSCs.

U.S.NRC
United States Nuclear Regulatory Commission
Protecting People and the Environment

22

A **Nonsafety related** SSCs is classified as Class D when:

- It directly acts to prevent unnecessary actuation of the passive safety systems or
- It supports those SSCs which directly act to prevent the actuation of passive safety systems are also Class D.

These are generally SSCs that support plant cooldown and depressurization and maintain shutdown conditions during maintenance and refueling outages.

Additional requirements on procurement, inspection or monitoring are applied to these SSCs.

Also, for Class D structures, systems, and components containing radioactivity, it is demonstrated by conservative analysis that the potential for failure due to a design basis event does not result in exceeding the normal offsite doses per 10 CFR 20. This criterion is in conformance with the definition of Class D in Regulatory Guide 1.26.

For Class D structures, systems, and components considered to be risk significant as defined in the reliability assurance program (see Section 16.2). Provisions are made to check for operability, including appropriate testing and inspection, and to repair out-of-service structures, systems, and components. These provisions are documented and administered in the plant reliability assurance plan and operating and maintenance procedures.

The inclusion of these nonsafety-related structures, systems, and components in Class D recognizes that these systems provide an important first level of defense that helps to reduce the calculated probabilistic risk assessment core melt frequency.

Some Class D structures, systems, and components are assumed to function in a severe containment environment. The design requirements for these components include operation in such an environment. An evaluation is done to confirm that the structure, system, or component can be expected to function in such an environment.

Standard industrial quality assurance standards are applied to Class D structures, systems, and components to provide appropriate integrity and function although 10 CFR 50, Appendix B and 10 CFR 21 do not apply. 10 CFR 50, Appendix B and 10 CFR 21 do apply to Class D structures, systems, and components that are seismic Category I. These industrial quality assurance standards are consistent with the guidelines for NRC Quality Group D.

The industry standards used for Class D structures, systems and components are widely used industry standards. Typical industrial standards used for Class D systems and components are provided as follows:

- Pressure vessels – ASME Code, Section VIII
- Piping – ANSI B 31.1. Power Piping, (Reference 5)
- Pumps – API 610 (Reference 6), or Hydraulic Institute Standards (Reference 7)
- Valves – ANSI B16.34 (Reference 8)
- Atmospheric storage tanks – API-650 (Reference 9), AWWA D 100 (Reference 10), or
- ANSI B96.1 (Reference 11)
- 0 - 15 psig Storage Tanks – API-620 (Reference 12)
- AC motor and generators – NEMA MG1 (Reference 13)
- Circuit breakers, switchgear, relays, substations and fuses – IEEE C37 (Reference 14).

For Class D structures, systems, and components required to be monitored for maintenance effectiveness by 10 CFR 50.65, the availability parameters and criteria are included in the maintenance monitoring plan for evaluating the effectiveness of the maintenance program.

Classification of Structures, Systems and Components (SSCs)

Table 3.2-1

COMPARISON OF SAFETY CLASSIFICATION REQUIREMENTS

AP1000 Code Letter (1)	ANS Equipment Safety Class (2)	RG 1.29 Seismic Design Reqmnts (3)	ASME Code, Sec. III Class (4)	IEEE Requirements	RG 1.26 NRC Quality Group (5)	10 CFR 50 Appendix B (6)	Inspection & Testing Requirements	Required Test & Maint.
A	SC-1	1	1	NA	GROUP A	YES	YES(7)	(8)
B	SC-2	1	2	NA	GROUP B	YES	YES(7)	(8)
C	SC-3	1	3	1E	GROUP C	YES	YES(7)	(8)
D	NNS(2)	NA(9)	NA(10)	(10)	GROUP D	NO(10)	YES(11)	(11)
OTHER	NNS(2)	NA(13)	NA	NA	NA	NA(12)	NA	NA

NA - Not Applicable

OTHER includes Classes E, F, L, P, R, and W.

Notes:

1. A single letter equipment classification identifies the safety class, quality group, and other classifications for AP1000. See the subsection 3.2.2 for definition.
2. AP1000 safety classification is an adaptation of that defined in ANSI 51.1. The NNS defined in the ANSI 51.1 standard is divided into several AP1000 equipment classifications namely, Classes D E, F, L, P, R, and W.
3. See subsection 3.2.1 for definition of seismic categories.
4. ASME Boiler and Pressure Vessel Code, Section III defines various classes of structures, systems, and components for nuclear power plants. It defines criteria and requirements based on the classification. It is not applicable for nonsafety-related components.
5. The quality group classification corresponds to those provided in Regulatory Guide 1.26.
6. "Yes" means quality assurance program is required according to 10 CFR 50 Appendix B.
   "No" means quality assurance program is not required according to 10 CFR 50 Appendix B.
7. Class A, B, and C, structures, systems, and components built to ASME Code, Section III are inspected to ASME Code, Section XI requirements. See the text for additional specification of requirements.
8. Class A, B, and C structures, systems, and components that are required to function to mitigate design base accidents have some testing requirements included in the plant technical specifications. In addition to the requirements in the technical specifications, testing and maintenance requirements are included in an administratively controlled reliability assurance plan.
9. See subsection 3.2.1 for cases when seismic Category II requirements are applicable for Class D structures, systems, and components.
10. See the text for a discussion of the industry standards used in the construction of Class D structures, systems and components.
11. Class D structures, systems, and components have selected reliability assurance programs and procedures to provide availability when needed. These programs are administratively controlled programs and are not included in the technical specifications.
12. Normal industrial procedures are followed in procuring, designing, fabricating, and testing these nonsafety-related structures, systems, and components.
13. Some Class E, F, L, P, R, and W structures, systems, and components may be classified as seismic Category II. See subsection 3.7.3.

U.S.NRC
United States Nuclear Regulatory Commission
Protecting People and the Environment

23

This table shows how seismic, ANS safety classes and NRC Quality Groups are related.

It also shows, and this is important to our discussion, how the:

- RG 1.29 Seismic design requirements, and
- ASME Code design and inspection requirements.

Relate to the AP1000 classification. (POINT THIS OUT ON THE SLIDE).

RG 1.29 and the ASME Code provide the design methods and criteria that result in SSCs satisfying the GDC.

For this reason, proper classification of SSCs is very important in order to assure they are designed, constructed, inspected and tested according to the appropriate codes and standards.

Classification of Structures, Systems and Components (SSCs)

- The NRC approved one exception to the guidance in RG 1.26.
- Portions of the passive core cooling system (PXS) were classified as QG C vs. QG B.
- The applicant had to commit to ASME Class 2 construction inspections.

U.S.NRC
United States Nuclear Regulatory Commission
Protecting People and the Environment

24

Portions of the PXS system classified as QG C vs. QG B were:

- accumulators and vessel injection piping system up to the ASME Class 1 check valves.
- vessel injection piping system from the in-containment refueling water storage tank (IRWST) to the ASME Class 1 check valves.
- injection piping system from the containment sump to the vessel injection piping coming from the IRWST.

The NRC found this acceptable, with the commitment for Class 2 construction inspections, because:

- QG C is essentially equivalent to QG B, except that it has less stringent construction inspection and inservice inspection (ISI) rules.
- All of these SSCs are located inside containment, therefore, radioactive releases are contained.
- Minor leakage does not affect the functional performance of these systems and components.
- Continuous water level monitoring of the accumulators and the IRWST is performed to detect leaks.

Classification of Structures, Systems and Components (SSCs)

- An alternative risk informed approach exists in 10 CFR 50.69:
  - Uses a risk informed method to assign applicable codes and standards to SSCs.
  - Requires a high quality PRA.
  - Guidance is provided in RG 1.201.
  - SRP does not address this approach.

U.S.NRC
United States Nuclear Regulatory Commission
Protecting People and the Environment

25

RG 1.201 was issued for trail use and an SRP section has not been developed.

Staff review is on a case by case basis.

This approach has not been used to great extent.

Classification of SSCs (3.2) Summary

- Proper classification of SSCs is very important.
- Classification determines codes applied for design, construction, inspection and operation of SSCs.
- Provisions in codes provide bases for concluding applicable GDC are met.
- The staff's evaluation findings are based on review against RGS.

U.S.NRC
United States Nuclear Regulatory Commission
Protecting People and the Environment

26

DCD Tier 2, Tables 3.2-1 and 3.2-3, and related P&IDs identify how SSCs and portions of systems are classified.

The staff reviews these tables and P&IDs to verify that SSCs were classified consistent with 10 CFR 50.55a and RG 1.26 and 1.29.

Properly classification of SSCs is very important. Proper classification ensures that appropriate design, fabrication, and inspection methods will be used to result in SSCs in order to satisfy applicable GDCs.

The staff's SER Evaluation Finding is that SSCs are appropriately classified consistent with applicable regulatory guidance.

AP1000 Site Envelope and Design for Wind, Tornado, Flooding, Missiles and Pipe Breaks

Module 16
(SER Sections 2.3, 2.4, 2.5, 3.3, 3.4, 3.5 and 3.6)

INSTRUCTOR: Jack Strosnider
October 2008

U.S.NRC
United States Nuclear Regulatory Commission
Protecting People and the Environment

27

In this module we'll talk about SER Sections:

2.3 Meteorology

2.4 Hydrologic Engineering

2.5 Geological, Seismological and Geotechnical Engineering

These three sections deal with the assuring that the plant design bounds potential site specific natural phenomena.

SER Sections

2.3 Meteorology

2.4 Hydrologic Engineering

2.5 Geological, Seismological and Geotechnical Engineering

U.S.NRC
United States Nuclear Regulatory Commission
Protecting People and the Environment

28

These are the SER sections we are going to talk about now.

Learning Objectives

- Class Participants are expected to understand:
  - Know applicable GDC, regulations, and regulatory guides.
  - Areas of staff review:
    - Understand bounding nature of design certification and responsibility of COL applicant.
    - Recognize significance of GDC 2 requirement to provide margin to account for available data.

U.S.NRC
United States Nuclear Regulatory Commission
Protecting People and the Environment

29

After this session you should:

- Be familiar with the applicable GDC, regulations and RGs.
- Understand that the design certification process does not approve specific sites; rather the COL applicant must demonstrate that site specific weather, flooding and seismic parameters are bounded by those approved in the certified design.
- Understand the importance of having sufficient data for the COL applicant to define weather, flooding and seismic characteristics of a specific site.

Applicable GDC and Regulations

- GDC 2 – design basis for protection against natural phenomena including:
  - most severe natural phenomenon with margin to account for available data.
  - combinations of normal and accident conditions with natural phenomenon.
  - importance of safety function.
- GDC 4 - environmental and dynamic effects:
  - Meteorological - protection against missiles.
  - Part 100 - evaluation of site meteorological, hydrological and seismological parameters.

U.S.NRC
United States Nuclear Regulatory Commission
Protecting People and the Environment

30

Note in particular the requirement of GDC 2 with regard to:

- Protecting against the most severe natural phenomena with margin to account for available data.
- Part 100 and associated guidance for defining meteorological, flooding and seismic events rely heavily on available data.

We'll talk more about this later.

SRP Acceptance Criteria

- DCD must provide meteorological, hydrological, and seismological parameters postulated for the design:
  - Representative of a reasonable number of sites.
  - Included as Tier 1 information.
  - Pertinent parameters provided in summary table.

U.S.NRC
United States Nuclear Regulatory Commission
Protecting People and the Environment

31

The contents of the DCD are relatively straight forward:

- The meteorological, hydrological and seismic parameters that the plant is designed for must be included in the DCD – we'll see what they are in the next few slides.
- The parameters selected should bound a reasonable number of potential sites that the plant might be built at.

Meteorological Design Parameters

- Temperature, humidity, precipitation, snow, wind and tornado.
- Based on EPRI advanced light water reactor utility requirements document (ALWR URD).

U.S.NRC
United States Nuclear Regulatory Commission
Protecting People and the Environment

32

These are the meteorological parameters that must be provided.

The EPRI document provides parameters that can be assumed for various parts of the United States.

Hydrologic Design Parameters

- Ground water elevation.
- Flood level elevation.

U.S.NRC
United States Nuclear Regulatory Commission
Protecting People and the Environment

33

The are the hydrological parameters that must be provided in the DCD.

Acceptable values for these parameters are also provide in the EPRI Utility Requirements Document.

Seismic Design Parameters

- Safe shutdown earthquake (SSE).
- Peak ground acceleration.
- Response spectra.
- Limited to hard rock sites for this design review.

U.S.NRC
United States Nuclear Regulatory Commission
Protecting People and the Environment

34

These are the seismic parameters that must be provided.

Acceptable values for these parameters are also provided in the EPRI Utility Requirements Document.

The main thing to emphasize is that **the SSE is applicable to hard rock sites in the Eastern U.S. Version 16 of the DCA is proposing to expand the certified design to sites other than hard rock. In order to do this the geometry of components such as the pressurizer are being changed i.e. the PZR is being made shorter and fatter.**

2.5.4 Stability and Uniformity of Subsurface Materials and Foundations
Combined License applicants referencing the AP1000 certified design will address the following site-specific information related to the stability and uniformity of subsurface materials and foundations. • Excavation • Bearing capacity • Settlement • Liquefaction Seismic analysis and foundation design for rock sites is described in Sections 3.7 and 3.8. **The AP1000 certified design is based on the nuclear island being founded on rock.** Soils may be present above the foundation level.

COL Items

- COL applicant will establish actual site characteristics or reference an ESP with such characteristics.
- COL applicant must:
  - Provide bases for site specific parameters.
  - Show design parameters bound site specific parameters.
- COL applicant must justify any differences.

U.S.NRC
United States Nuclear Regulatory Commission
Protecting People and the Environment

35

Site specific values are not provided in the DCD for the meteorological, hydrologic or seismic parameters.

The applicant must develop the site specific values of the parameters and show they are bounded by the design values in the DCD.

This is a significant effort. For example, development of site specific values for the hydrologic parameters must consider:

- probable maximum flood of rivers and streams,
- dam failures,
- storm surge and seiche,
- tsunami,
- cooling water supply,
- groundwater, and
- site specific flood protection requirements.

Applicable Regulatory Guides

- RG 1.70, Standard Format and Content of SARS for Nuclear Power Plants.
- RG 1.76, Design Basis Tornado and Tornado Missiles for Nuclear Power Plants.
- RG 1.59, Design Basis Floods for Nuclear Power Plants.
- RG 1.102, Flood Protection for Nuclear Power Plants.
- RG 1.27, Ultimate Heat Sink for Nuclear Power Plants.
- RG 1.165, Identification and Characterization of Seismic Sources and Determination of SSE Ground Motion.
- RG 1.208, A Performance Based Approach to Define the Site-specific Earthquake Ground Motion.

U.S.NRC
United States Nuclear Regulatory Commission
Protecting People and the Environment

36

These regulatory guides provide acceptable approaches for the COL applicant to use to define site specific values.

RG 1.70 provides overall guidance on what must be included in the COL application.

The other RGs provide specific approaches to deal with defining the site specific tornado, floods and seismic events. Part 100 also addresses definition of site specific parameters.

The staff conducts its reviews to verify that the application is consistent with Part 100 and these regulatory guides.

Topic of Special Interest

- GDC 2 requires assuming most severe natural phenomenon with margin to account for available data.
  - Defining the site specific tornado (see RG 1.76), flood (see RG 1.59) and safe shutdown earthquake (SSE) (see RG 1.165) could be challenging for the COL applicant.
  - Extensive site characterization and data are required.

U.S.NRC
United States Nuclear Regulatory Commission
Protecting People and the Environment

37

As noted earlier, GDC 2 requires that margins be included to account for uncertainties based on the amount of data available.

The approaches laid out in Part 100 and associated regulatory guides and the development of the EPRI Utility Requirements Document rely on a large amount of data for characterizing specific sites.

For example, regarding defining the maximum tornado:

- The data base in RG 1.76 for the US included reports on 39,600 tornados with sufficient information on location, intensity, length and width to be used in an analysis of tornado strike probability and maximum wind speeds.
- 10 CFR 100.23 stats that determination of the SSE should be based on probabilistic hazard analysis or sensitivity analyses (See RG 1.165) This requires significant site specific data.

and

- Remember when doing probabilistic assessments, that the margins needed to account for uncertainties increase with decreasing amounts of data.

Site Envelop and Design Bases

- Exception to RG 1.76:
  - The AP1000 tornado design wind speed is 134.1 m/sec (300 mph).
  - EPRI ALWR URD report indicates some sites in US have higher tornado wind speeds.

U.S.NRC
United States Nuclear Regulatory Commission
Protecting People and the Environment

38

Loadings," and DCD Tier 1, Table 5.0-1, "Site Parameters," the applicant specified meteorological parameters, such as air temperatures, humidity, precipitation, snow, wind, and tornado limits, for which the AP1000 is designed. In an RAI, the staff asked the applicant for references for the meteorological data used in the analyses that resulted in the selection of the site parameter values. In response, Westinghouse referenced the Electric Power Research Institute (EPRI) Advanced Light-Water Reactor (ALWR) Utility Requirements Document (URD).

In a subsequent RAI, the staff asked the applicant for the technical basis for its selection of the values and the deviation of the tornado parameter from the recommendations of Regulatory Guide (RG) 1.76, "Design Basis Tornado for Nuclear Power Plants." The applicant responded that the deviation from RG 1.76 was based on SECY-93-087, "Policy, Technical, and Licensing Issues Pertaining to Evolutionary and Advanced Light-Water Reactor (ALWR) Designs," dated April 2, 1993.

The NRC staff acknowledges that the AP1000 is designed to the values referenced above, but does not claim that they are representative of any particular percentile of possible sites in the United States, nor does the staff assert the acceptability of the basis for the choice of the values with respect to siting. For example, the AP1000 is designed for a tornado wind speed of 134.1 m/sec (300 mph), as discussed in SECY-93-087. The staff notes that a letter dated March 25, 1988, from the NRC to the ALWR Utility Steering Committee identifies site specific design-basis wind speeds higher than 134.1 m/sec (300 mph) in some areas of the United States. Thus, a particular site may potentially be characterized by tornado wind speeds greater than 134.1 m/sec (300 mph). Therefore, the AP1000 design tornado wind speed may not apply for all sites.

In SRM SECY-03-0227, Review Standard RS-002, "Processing Applications for Early Site Permits," dated March 15, 2004, the Commission directed the staff to update the review guidance, including RG 1.76, to reflect more recent tornado wind speed data. This activity does not affect the design certification review of the AP1000. However, a COL applicant may have to reconcile a particular site tornado wind speed if it is greater than the tornado wind speed used in the AP1000 design.

SER Evaluation Findings (2.2 - 2.5)

The staff concluded GDC 2 regarding protection against natural phenomena and GDC 4 regarding environmental effects were met based on:

- DCD:
  - meeting the requirements for DCD content.
  - DCD meteorological, hydrologic and seismic design parameters are consistent with RGs and EPRI advanced light water reactor utility requirements document.
- COL
  - the requirement that the COL applicant demonstrate that site specific parameters are bounded by the DCD design parameters.

U.S.NRC
United States Nuclear Regulatory Commission
Protecting People and the Environment

39

In summary,

- GDC 2 and 4 were met by providing the appropriate design parameters in the DCD.
- These parameters were consistent with the EPRI Utility Requirements Document.
- However, significant work is left to the COL applicant who must develop the values of the site specific parameters and show that they are bounded by the design values certified in the DCD.

SER Sections

3.3 Wind And Tornado Loadings

3.4 External And Internal Flooding

3.5 Missile Protection

3.6 Protection Against Pipe Rupture

U.S.NRC
United States Nuclear Regulatory Commission
Protecting People and the Environment

40

In this section we'll talk about:

- What wind and tornado speeds should be used in the design of SSCs and how those wind and tornado speeds are converted into equivalent loads to be used in design of SSCs.
- Evaluation of site specific external flooding parameters relative to the certified design and plant layout an design with regard to provisions for controlling flooding.
- Assumptions for design bases missiles including externally and internally generated missiles, missiles generated by main turbine failure, missiles generated by wind and tornados.
- Design bases for pipe rupture including failure locations and failure modes, and leak-before-break.

Learning Objectives (3.3 - 3.6)

- Class Participants are expected to understand:
  - Applicable GDC requirements.
  - Resources available to support reviews.
  - The bases for regulatory approval including the role of COL applicant items.

U.S.NRC
United States Nuclear Regulatory Commission
Protecting People and the Environment

41

Summarize the three objectives in the slide.

Applicable GDC and Regulations

- GDC 2 requires SSCs important to safety:
  - be designed to withstand effects of natural phenomena (including wind, tornados, and floods).
- GDC 4 requires SSCs important to safety:
  - be able to accommodate effects of environmental conditions, and
  - be protected from missiles due to equipment failure or events outside the plant.

U.S.NRC
United States Nuclear Regulatory Commission
Protecting People and the Environment

42

The topics we're talking about in this session are all related to satisfying these two GDC.

These GDC require that the plant be designed to:

- withstand natural events (such as tornados and floods), and
- accommodate environmental conditions and events (such as generation of missiles and the effects of pipe breaks).

The focus is on establishing the design bases assumptions and analysis methods that will ensure these areas are effectively addressed.

Applicable Regulatory Guides

- RG 1.13, Spent Fuel Storage Facility Design Basis.
- RG 1.27, Ultimate Heat Sink for Nuclear Power Plants.
- RG 1.76, Design Basis Tornado and Tornado Missiles for Nuclear Power Plants.
- RG 1.115, Protection Against Low Trajectory Turbine Missiles.
- RG 1.117, Tornado Design Classification.

U.S.NRC
United States Nuclear Regulatory Commission
Protecting People and the Environment

43

Acceptance is based on the design meeting the guidelines of:

- RG 1.13 covers the capability of spent fuel pool systems and structures to withstand the effects of externally-generated missiles and to prevent missiles from contacting stored fuel assemblies;
- RG 1.27 covers the capability of the ultimate heat sink and connecting conduits to withstand the effects of externally-generated missiles;
- RG 1.115 covers the protection of important safety-related SSCs from the effects of turbine missiles; and
- RG 1.117 covers the protection of important safety-related SSCs from the effects of tornado missiles.

The staff conducted its review to verify that the application was consistent with these RGs.

Review of Wind and Tornado Design

- NRC staff used the SRP criteria in its review:
  - Maximum wind speeds and other meteorological parameters used in the design are consistent with Section 2.3.
  - Per RG 1.76 design should consider a combination of tornado direct wind effects, atmospheric pressure change and missiles.
  - Procedures for transforming wind and tornado speeds into an equivalent pressure are consistent with ASCE/SEI 7-05.

U.S.NRC
United States Nuclear Regulatory Commission
Protecting People and the Environment

44

With regard to the first item, the COL applicant must show that the site specific meteorological parameters are bounded by those assumed in the certified design.

It should be noted that the maximum tornado wind speed assumed in the AP1000 design certification is 300 mph. This maximum wind speed is assumed applicable to all parts of the contiguous U.S. This was based on re-evaluations of the original evaluations performed in the 1970's which assumed a higher maximum speed (360 mph). SECY-93-087 proposed and the Commission approved a revised maximum wind speed of 300 mph (483 kph) in 1993. It is further interesting to note that the current version of RG 1.76 (dated March 2007) specifies maximum tornado wind speeds ranging from 160 mph to 230 mph (72 kph to 103 kph).

With regard to the second item, RG 1.76 provides options for combining the three types of loads created by a tornado. The methods of combining the loads recognizes that they are not expected to occur simultaneously.

It's interesting to note that the atmospheric pressure drop is considered the dominant load. (see below)

With regard to the third item, ASCE/SEI 7-05, American Society of Civil Engineering/Structural Engineering Institute, Minimum Design Loads for Buildings and Other Structures.

> After tornado-generated wind effects, Ww, atmospheric pressure change effects, Wp, and missile impact effects, Wm, are determined, the combination thereof should then be established in a conservative manner for structures. An acceptable method of combining these effects and establishing the total tornado load on a structure is as follows:
>
> $Wt = Wp$ Eq. 1
> $Wt = Ww + 0.5\,Wp + Wm$ Eq. 2
>
> where:
> Wt = total tornado load
> Ww = load from tornado wind effect
> Wp = load from tornado atmospheric pressure change effect
> Wm = load from tornado missile impact effect

Review of External and Internal Flooding

- The NRC staff used the following SRP criteria in its review of external flooding:
  - assuming the highest site specific flood and groundwater levels consistent with guidance in Section 2.4.
  - verifying the site specific plant elevations are bounded by the flood and ground water elevations assumed in the certified design including hydrostatic and buoyancy loads.
  - considering wave loads in calculating overturning moments.
  - analyzing wave loadings if the flood level is above grade (using methods in the army coastal engineering research center shore protection manual).

U.S.NRC
United States Nuclear Regulatory Commission
Protecting People and the Environment

45

Summarize the points in the slide.

Note that the COL applicant must demonstrate that the site specific flood and groundwater levels relative to the plant elevations are bounded by the assumptions in the certified design.

Note that Hydrostatic loads can be reduced by use of drainage or pumping systems.

This is the reference for the last bullet: U.S. Army Coastal Engineering Research Center, “Shore Protection Manual” (Vol. I, June 2002, reprinted from 1973 edition and Vol. II, June 2002, reprinted from 1973 edition) or in EM 1110-2-1100, Coastal Engineering Manual, Part II, Chapter 1, “Water Wave Mechanics,” U.S. Army Corps of Engineers, April 30, 2002 as applicable.

Review of External and Internal Flooding

- The NRC staff used the following SRP criteria in its review of internal flooding:
  - proper seismic classification and design per Sections 3.2 and 3.7 and RG 1.29.
  - design to accommodate effects of discharged fluids from pipe breaks per Sections 3.6.1 and 3.6.2.

U.S.NRC
United States Nuclear Regulatory Commission
Protecting People and the Environment

46

As indicted by the criteria in the SRP, internal flooding is concerned with the failure of SSCs that can discharge water inside the plant.

We will discuss the criteria for assuming pipe breaks a little later.

However, this slide emphasizes the importance of proper classification of SSCs which will ensure:

1) That appropriate SSCs are seismically designed, and

2) Application of the correct criteria for assumed pipe breaks.

Review of External and Internal Flooding

The NRC reviewers evaluated:

- Plant drawings and layout for adequacy of drains, internal curbs, water tight doors, etc.
- Potential flooding due to operation of the fire protection system.
- Potential flooding due to failure of non-seismic and non-tornado protected components (assuming failure of single worst case SSC).
- Failure of moderate energy piping not seismically supported for full breaks.
- PRA with regard to flooding.
- Ability of design features, e.g., pumping systems, to support safe shutdown.
- Seismic qualification of design features used to mitigate failure of non-seismic SSCs.
- Ability of submerged SSCs to function.
- Verification of safety related, single failure proof design of dewatering systems used to protect safety related SSCs.

U.S.NRC
United States Nuclear Regulatory Commission
Protecting People and the Environment

47

Summarize the points in the slide.

Review of Internally Generated Missiles

- SRP acceptance criteria:
  - if the joint probability of missile generation and impact on safety-related SSCs or nonsafety-related SSCs that could impact safety-related SSCs is greater than 10-7, missile protection should be provided.
- RG 1.117 provides guidance on SSCs to be protected.

U.S.NRC
United States Nuclear Regulatory Commission
Protecting People and the Environment

48

These criteria and methods of protection apply to missiles generated by equipment failures inside or outside of containment.

Six methods of protection are identified in the SRP these are listed on the next slide.

Review of Internally Generated Missiles

- Place the SSC in a missile proof structure.
- Separate redundant SSCs.
- Provide local shielding (per RG 1.115).
- Design the SSC to withstand missile impact.
- Provide design features to prevent generation of missiles.
- Orient missile source to avoid missile strikes.

U.S.NRC
United States Nuclear Regulatory Commission
Protecting People and the Environment

49

SRP 3.5.3 and RG 1.155 position C.3 provides guidance for design of protective barriers.

Review of Turbine Missiles

- SRP criteria:
  - P1 X P2 X P3 must be less than 10-7 per year per plant where:
    - P1 = turbine failure/missile generation per year.
    - P2 = probability missile strikes safety-related SSC.
    - P3 = probability SSC fails.

U.S.NRC
United States Nuclear Regulatory Commission
Protecting People and the Environment

50

The large steam turbines have rotors with large masses and rotate at relatively high speeds during normal reactor operation. The failure of a rotor may result in the generation of high energy missiles that could affect safety-related SSCs.

Plant designs are reviewed to determine whether safety-related plant SSCs have adequate protection against the effects of potential turbine missiles.

Review of Turbine Missiles

- SRP criteria:
  - due to uncertainties in calculating P2 and P3, NRC assumes P2 X P3 equals:
    - 10-3 per year for favorably oriented turbines
    - 10-2 per year for unfavorably oriented turbines
    - therefore, P1 must be maintained below 10-4 to 10-5.

U.S.NRC
United States Nuclear Regulatory Commission
Protecting People and the Environment

51

Summarize, per the slide, how P2 and P3 are treated.

P1, that is turbine rotor failure can occur and generate a missile, can occur in two ways:

1) Failure of the rotor material at normal operating speed, or
2) Failure of the rotor due to failure of the overspeed protection system.

The first of these failure modes depends on rotor material properties, fabrication quality, and development of flaws in the rotor.

The frequency of both failure modes can be strongly affected by inservice inspection and inservice testing.

Turbine manufacturers provide reports with tables of missile generation probability verses time based on inservice visual, surface or volumetric inspection intervals and inservice valve testing intervals. The SRP provides guidance on the specifics of the inspection and testing programs to be implemented.

The SRP also provides guidance for an alternate method using barriers and crediting existing structures to keep the frequency of missile generation acceptably low.

Review of Turbine Missiles

Staff review and acceptance was based on:

- Meeting SRP provides guidance for:
  - Turbine rotor inspections.
  - Speed control system testing to maintain acceptably low probability of missile generation.
- P1 does not exceed the 10-4 criterion for favorably oriented turbines.

U.S.NRC
United States Nuclear Regulatory Commission
Protecting People and the Environment

52

Inspection programs are based on an evaluation of the capability of nondestructive testing methods and fracture mechanics analyses to determine the correct inspection methods and frequencies.

Westinghouse reports:

- WCAP-15783 "Analysis of the Probability of the Generation of Missiles from Fully Integral Nuclear Low Pressure Turbines,"

and

- WCAP-15785, "Probabilistic Evaluation of Turbine Valve Test Frequency,"

provide the bases for the turbine reliability.

(The effectiveness of the control valve testing program is evaluated in SER Section 10.2.8.)

Missiles Generated by Tornados and Extreme Winds

- SRP acceptance criteria:
  - RG 1.76, provides guidance on missile types and speeds:
    - massive high kinetic energy missile.
    - rigid missile.
    - small rigid missile.

U.S.NRC
United States Nuclear Regulatory Commission
Protecting People and the Environment

53

RG 1.76 – Design Basis Tornado and Tornado Missiles for Nuclear Power Plants Identifies types of missiles to assume in the design basis – summarize the slide.

The AP1000 design basis missiles are:

- A massive high-kinetic-energy missile, which deforms on impact:

  It is assumed to be a 4000-pound automobile impacting the structure at normal incidence with a horizontal velocity of 105 mph or a vertical velocity of 74 mph. This missile is considered at all plant elevations up to 30 feet above grade.

- A rigid missile of a size sufficient to test penetration resistance.

  A 275 pound, eight inch armor-piercing artillery shell impacting the structure at normal incidence with a horizontal velocity of 105 mph or a vertical velocity of 74 mph.

- A small rigid missile of a size sufficient to just pass through any openings in protective barriers.

  A one inch diameter solid steel sphere assumed to impinge upon barrier openings in the most damaging direction at a velocity of 105 mph.

  (105 mph exceeds the RG max speed of 135 ft/sec = 92mph).

Review of Wind And Tornado Design

- The NRC staff used the following SRP criteria in its review:
  - tornado generated missile characteristics and the design basis tornado missile spectrum are provided in RG 1.76.
  - criteria for transforming tornado generated missiles into equivalent static loads on structures are provided in SRP 3.5.3.
  - it should be shown that failure of SSCs will not result in damage to safety related SSCs.

U.S.NRC
United States Nuclear Regulatory Commission
Protecting People and the Environment

54

The NRC staff reviews the application using the criteria in the SRP and referenced regulatory guide.

With regard to the last bullet:

- This can be accomplished by showing that the SSCs will not be impacted,

or

- That if they are impacted, they can withstand the loads.

External Missile Sources

Missiles generated by events near the site and aircraft must be addressed by the COL applicant.

U.S.NRC
United States Nuclear Regulatory Commission
Protecting People and the Environment

55

Missiles could be generated near the site from nearby industrial activities or land and sea traffic.

Evaluation of missiles that could be generated by events near the plant requires knowledge of the specific site and its surroundings.

Consideration of aircraft does not include deliberate attacks.

Postulated Pipe Breaks

- For breaks piping outside containment SRP acceptance criteria are based on conformance with BTP 3-3, protection against piping failures in fluid systems outside containment.
- The staff reviews the application to verify it is consistent with the criteria in BTP 3-3.

U.S.NRC
United States Nuclear Regulatory Commission
Protecting People and the Environment

56

Summarize the slide.

Postulated Pipe Breaks

- BTP 3-3.
- High and moderate energy piping:
  - separated from essential SSCs,
  - has protective enclosures, or
  - a failure modes and effects analysis demonstrates performance.

U.S.NRC
United States Nuclear Regulatory Commission
Protecting People and the Environment

57

There are three methods for demonstrating that high and moderate energy piping are protected from pipe breaks.

In order to provide protection from pipe breaks, it is necessary to know where to postulate they happen.

Go to the next slide.

Postulated Pipe Breaks

- BTP 3-4 provides guidance for:
  - Where to postulate pipe failure locations inside and outside of containment.
  - Types of failures to postulate i.e., orientations and break sizes based on pipe size and energy.
  - Assumptions for calculating jet forces.

U.S.NRC
United States Nuclear Regulatory Commission
Protecting People and the Environment

58

Class 1 piping at terminal ends, locations with high stress range and where usage factor exceeds 0.1.

Class 2 and 3 and non-seismic piping at terminal ends, at pipe fittings and where stresses exceed .8 of limits.

Ruptures need not be postulated in containment penetration areas if they meet specified conditions including:

- Stress and fatigue limits.
- 100% volumetric inspections each inspection interval.
- Types and sizes of breaks are dependent on piping size and energy.
- Jet forces are calculated based on assumed opening size, off-set of piping.

Leak-Before-Break

- RCPB pipes greater than 6 inches (15.24) inches in diameter have been qualified for leak-before-break.
- NRC staff reviews the following areas consistent with the SRP:
  - use of as-built design basis loads;
  - technical specifications for snubbers;
  - potential for erosion/corrosion, cavitation;
  - corrosion susceptibility;
  - adequacy of leakage detection system;
  - factor of safety of 10 on leakage rate;
  - potential for water hammer;
  - potential for creep;
  - sources of indirect rupture;
  - operating temperatures and fracture toughness;
  - analysis methods.

U.S.NRC
United States Nuclear Regulatory Commission
Protecting People and the Environment

59

LBB analyses should demonstrate that the probability of pipe rupture is extremely low under conditions consistent with the design basis for the piping.

The piping systems that meet the LBB criteria are not subject to the dynamic effects associated with a pipe failure.

This is a long list of areas that are considered in the LBB evaluation. It is first necessary to dismiss mechanisms such as service induced degradation or external events that could cause pipe failure.

Then, a deterministic analysis of the piping system that demonstrates sufficient margins against failure, including verified design and fabrication and an adequate inservice inspection program, can be assumed to satisfy the extremely low probability criterion. This analysis basically shows that the size crack that can be detected long before it reaches the size that would result in pipe break.

High-energy fluid system piping that meets the LBB criteria is evaluated for the effects of leakage cracks.

AP1000 piping that meets the LBB criteria include reactor coolant loop branch piping, the main steam (MS) piping within containment, and other primary piping inside containment which is equal to or greater than 15.2 cm (6 in.) nominal pipe size (NPS).

High-energy fluid system piping that does not meet the LBB criteria is evaluated for the dynamic effects of postulated pipe failures.

Safety-related equipment subject to the resulting dynamic effects of pipe failures are protected from these dynamic effects by protective structures, pipe restraints, and separation.

Leak-Before-Break Special Topic

- Operating experience has indicated the potential for stress corrosion cracking in PWR piping.
- COL applicants will implement an inspection plan for approved LBB piping.

U.S.NRC
United States Nuclear Regulatory Commission
Protecting People and the Environment

60

The V.C. Summer experienced main coolant loop weld cracking event involving Alloy 82/182 weld material.

To address this issue for currently operating plants, the industry has undertaken an initiative to:

(1) develop overall inspection and evaluation guidance,

(2) assess the current inspection technology, and

(3) assess the current repair and mitigation technology.

An interim industry report, “PWR Materials Reliability Project Interim Alloy 600 Safety Assessment for U.S. PWR Plants (MRP-44), Part 1: Alloy 82/182 Pipe Butt Welds,” was published in April 2001 to justify he continued operation of PWRs while the industry completes the development of the final is still under NRC review.

To address this issue for the AP1000 application, the applicant revised DCD Tier 2, Section 3.6.4.4 to state:

> COL applicants will develop an inspection program for piping subsystems qualified for LBB, including “augmented inspection plans and evaluation criteria consistent with those measures imposed on or adopted by operating PWRs as part of the ongoing resolution of concerns regarding the potential for PWSCC in operating plants.” [The plan will cover Alloy 52/152 weld material (for Alloy 690 base material)].

Summary

- GDC 2 and 4 requires SSCs important to safety to be designed to:
  - Withstand natural phenomena.
  - Accommodate environmental conditions.

U.S.NRC
United States Nuclear Regulatory Commission
Protecting People and the Environment

61

Read the slide.

SER Evaluation Findings (3.2 - 3.6)

- NRC Staff found the AP1000 design acceptable with regard to:
  - Wind and tornados.
  - Internally and externally caused floods.
  - Internally and externally generated missiles.
  - Effects of postulated pipe breaks.
- The COL applicant must demonstrate site specific parameters are bounded by the certified design.

U.S.NRC
United States Nuclear Regulatory Commission
Protecting People and the Environment

62

Read the slide.

The staff found the AP1000 design acceptable natural phenomena and environmental effects because it was consistent with the regulatory guidance we have discussed.

The COL has responsibility for a significant amount of work to demonstrate the specific site parameters are bounded by the certified design.

A significant amount of data is necessary to support some of these evaluations e.g., wind and tornado loads and flooding.

AP1000 Engineering Topics

Module 17
SER Sections 3.7 – 3.12

INSTRUCTOR: Jack Strosnider
October 2008

U.S.NRC
United States Nuclear Regulatory Commission
Protecting People and the Environment

63

SER Sections

3.7 Seismic Design

3.8 Design of Category I Structures

3.10 Seismic and Dynamic Qualification of Seismic Category 1 Mechanical and Electrical Equipment

U.S.NRC
United States Nuclear Regulatory Commission
Protecting People and the Environment

64

These are the SER sections we are going to talk about now.

Learning Objectives (3.7, 3.8 and 3.10)

- Class Participants are expected to understand:
  - GDC applicable to seismic design and seismic qualification.
  - Basis for NRC approval of design criteria and methodologies for Seismic Class I SSCs.
  - Bases for NRC approval of seismic qualification of SSCs.

U.S.NRC
United States Nuclear Regulatory Commission
Protecting People and the Environment

65

Seismic Design (SER Section 3.7)

Applicable GDC and regulations:

- GDC 2 - SSCs important to safety shall be designed to withstand effects of earthquakes. Design bases should include:
  - the most severe phenomena reported, and
  - appropriate combinations of normal and accident condition loads.
- 10 CFR 50 App S – criteria for implementing GDC 2.

U.S.NRC
United States Nuclear Regulatory Commission
Protecting People and the Environment

66

Seismic Design in Accordance with 10 CFR 50 App S Criteria

Areas of NRC review:

- SSE developed from RG 1.60.
- Synthetic ground motion time histories per SRP 3.7.1.
- Percent critical damping values consistent with RG 1.61.
- Appropriate load combinations.
- Suitable dynamic analysis methods.

U.S.NRC
United States Nuclear Regulatory Commission
Protecting People and the Environment

SSE design response spectra based on comparison with:

- Recent Eastern U.S. data.
- 10-4 probability uniform hazard spectra developed by LLL and EPRI.
- 79 strong earthquake time histories not previously considered in RG 1.60.

The main thing to emphasize is that **The SSE is applicable to hard rock sites in the Eastern U.S. Version 16 of the DCA is proposing to expand the certified design to sites other than hard rock. In order to do this the geometry of components such as the pressurizer are being changed i.e. the PZR is being made shorter and fatter.**

2.5.4 Stability and Uniformity of Subsurface Materials and Foundations
Combined License applicants referencing the AP1000 certified design will address the following site-specific information related to the stability and uniformity of subsurface materials and foundations. • Excavation • Bearing capacity • Settlement • Liquefaction Seismic analysis and foundation design for rock sites is described in Sections 3.7 and 3.8**. The AP1000 certified design is based on the nuclear island being founded on rock.** Soils may be present above the foundation level.

Input to the dynamic analysis of Seismic Cat I structures is based on 3 orthogonal, statically independent synthetic ground motions based on a set of recorded time histories.

Damping values are consistent with RG 1.61 except:

- 4% is used for the primary coolant loop piping, and
- 7% to 20% is used some for conduits, cable trays and their supports based on tests.

Load combinations are consistent with SRP 3.8.2 – 3.8.5.

Seismic analyses, using the equivalent static acceleration method, and the mode superposition time-history method, are performed for the safe shutdown earthquake to determine the seismic force distribution for use in the design of the nuclear island structures, and to develop in-structure seismic responses (accelerations, displacements, and floor response spectra) for use in the analysis and design of seismic subsystems.

Design of Seismic Category I Structures (SER Section 3.8)

- GDC 1 quality standards and records.
  - All seismic Category I structures must meet 10 CFR 50 App B.
- GDC 2, design bases for protection against natural phenomena.
  - Seismic response spectra in accordance with Section 3.7.
  - Load combinations specified in SRP.
- GDC 4, environmental and dynamic effects design bases.
  - Design conditions from sections 3.3, 3.4, 3.5 and 3.6.

U.S.NRC
United States Nuclear Regulatory Commission
Protecting People and the Environment

68

These GDC apply to all Seismic Category I structures including:

- The containment;
- Containment internal structures;
- Other Seismic Category I structures such as the shield building, containment air baffle, cable tray and HVAC supports; and
- Foundations.

GDC 1 requires SSCs be designed, fabricated, erected and tested to quality standards commensurate with the importance of their safety functions. All Seismic Category I structures must meet the QA requirements of 10 CFR 50 App B.

GDC 2 requires designing for:

- The most severe earthquake historically reported for the site with sufficient margin to account for the limited accuracy, quantity and period of time in which historical data have been accumulated.
- Definition of seismic inputs was described in section 3.7.
- Appropriate combinations of effects of normal and accident conditions are specified in the SRP sections.
- The design conditions developed for meteorological, flooding, missile and pipe break protection in sections 3.3, 3.4, 3.5, and 3.6 must be included.

Applicable GDC

Additional GDC apply to the containment:

- GDC 16 containment design.
  - The containment must be essentially leak tight.
  - Design conditions are not exceeded.
- GDC 50 regarding containment design basis.
  - Designed for post accident conditions.
  - Meets RG 1.57 and ASME Code Section III, subsection NE-2000.
  - Evaluating ultimate capacity and showing margin to failure.
  - ASME design report.
- GDC 51 fracture prevention of containment pressure boundary.
  - Designed to ASME Section III, Subsection NE-2000.
- GDC 53 provisions for testing and inspection.
  - Appropriate access provided.

U.S.NRC
United States Nuclear Regulatory Commission
Protecting People and the Environment

69

In addition to GDC 1, 2, and 4, these GDC apply specifically to the containment.

Summarize the slide.

Applicable RGs, Codes and Standards

Containment:

- Design procedures in accordance with ASME Code, Section III, Subsection NE, Article NE-300 supplemented by RG 1.57.
- Materials of construction in accordance with ASME, Section III, Subsection NE, Article NE-2000.
- QC program in accordance with ASME, Section III, Articles NE-2000, NE-4000 and NE-5000.

U.S.NRC
United States Nuclear Regulatory Commission
Protecting People and the Environment

70

The next 4 slides list the RGs and Codes and Standards that are applicable to the

Containment,

Containment internal structures,

Other Cat I structures, and

Foundations.

The staff reviewed the AP1000 application for consistency with these RGs and Codes and Standards.

Applicable RGs, Codes and Standards

Containment internal structures:

- RGs 1.57, 1.94, and 1.142,
- ACI-349, “Code Requirements For Nuclear Safety Related Structures,”
- ASME Boiler and Pressure Vessel Code, Section III, Division 2, “Code for Concrete Reactor Vessels and Containments,”
- ASME Boiler and Pressure Vessel Code, Section III, Subsection NE,
- AISC-N690-1994, “Specification for the Design, Fabrication, and Erection of Steel Safety-related Structures for Nuclear Facilities.

U.S.NRC
United States Nuclear Regulatory Commission
Protecting People and the Environment

71

Applicable RGs, Codes and Standards

Other Seismic Category I structures:

- RGs 1.69, 1.115, 1.142, and 1.143;
- ACI-349-01; AISC-N690-1994.

U.S.NRC
United States Nuclear Regulatory Commission
Protecting People and the Environment

72

Applicable RGs, Codes and Standards

Foundation:

- SRP Section 3.8.1, Subsection II.4 for the containment foundation.
- ACI 349 supplemented by RG 1.142 for foundations other than the containment.
- ANSI/AISC N690-1994 including Supplement 2 (2004) for steel foundations.

U.S.NRC
United States Nuclear Regulatory Commission
Protecting People and the Environment

73

Topics of Special Interest

- Applicant containment ultimate capacity evaluation:
  - Input to risk assessment and severe accident evaluations.
  - Analyses:
    - Consistent with SECY-93-087.
    - Demonstrates a leak-tight barrier for 24 hours following onset of core damage.

U.S.NRC
United States Nuclear Regulatory Commission
Protecting People and the Environment

74

The NRC has published guidance on computer modeling of steel containments for internal pressure capacity calculations in NUREG/CR-6906.

For new reactors, regulatory criteria require a determination of the internal pressure capacity for containment structures, as a measure of the safety margin above the design-basis accident pressure.

One methodology acceptable to the staff for cylindrical steel containments is to estimate the capacity based on attaining a maximum global membrane strain away from discontinuities (i.e., the hoop membrane strain in a cylinder) of 1.5 percent.

To conduct the necessary analysis, both nonlinear material behavior and nonlinear geometric behavior must be considered.

The stress-strain curve for the steel containment material should be based on the code-specified minimum yield strength and a stress-strain relationship above yield that is representative of that specific grade of steel. The stress-strain curve must be developed for the design-basis accident temperature.

The staff reviewed the applicants analysis relative to this guidance and found it acceptable.

Topics of Special Interest

- Modular construction of walls:
  - Steel face plates connected by steel trusses.
  - Concrete placed between faceplates after erection.
  - Methods of analysis similar to reinforced concrete.

U.S.NRC
United States Nuclear Regulatory Commission
Protecting People and the Environment

75

Modular construction methods were not used in the first generation of nuclear plants and represent a new approach in nuclear facility construction.

Structural wall modules consist of steel face plates joined by trusses. Shear studs are welded to the inside of the face plates. The faceplates are anchored to the concrete base by embedded connections such as reinforcing steel dowels.

Concrete is placed between the face plates after the modules are put in place.

Analysis methods are similar to those used for reinforced concrete.

Static analyses assume monolithic (un-cracked) stiffness.

Thermal and dynamic analyses take into account cracking of the concrete and adjust member properties (stiffness, moment of inertia, etc.)

The staff found the assumptions regarding use of monolithic vs. cracked section stiffness based on whether stresses remained below the cracking stress of the concrete and assumptions of zero stiffness for cracked areas acceptable when analyzing structures.

Note that stresses during construction also need to be included e.g., the hydrostatic pressure of freshly placed concrete.

Loads during transportation and placement should also be considered – expect this to be addressed by inspection program.

Modular Wall Construction

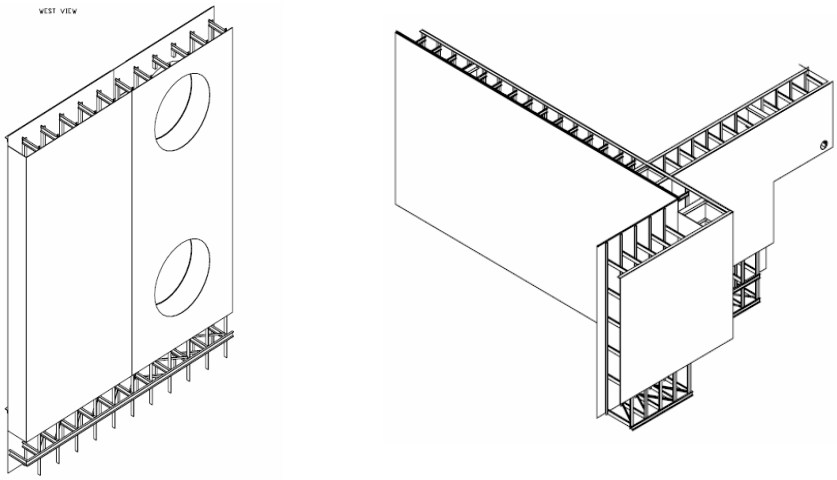

U.S.NRC
United States Nuclear Regulatory Commission
Protecting People and the Environment

76

Typical modular wall construction showing module with faceplates and trusses and Joining of modules.

Seismic and Dynamic Qualification of SSCs (SER Section 3.10)

- Applicable GDC:
  - GDC 1: qualifying equipment to appropriate quality standards.
  - GDC 2: qualifying equipment to withstand natural phenomena.
  - GDC 4: qualifying equipment for dynamic effects.
  - GDC 14: qualifying equipment to have extremely low probability of leakage or rupture.
  - GDC 30: qualifying RCPB to appropriate quality standards.

U.S.NRC
United States Nuclear Regulatory Commission
Protecting People and the Environment

77

Seismic and Dynamic Qualification of SSCs

- The DCD contains a qualification program with criteria and methodologies satisfying:
  - SRP 3.10, Guidance for Static and Dynamic Tests and Analyses.
  - SRP 3.9.3, Guidance for Load Combinations.
  - ANSI/IEEE STD 344-1987, as endorsed by RG 1.100, Seismic Qualification of Electric and Mechanical Equipment.
  - Qualification of Instrumentation in RG 1.97.

U.S.NRC
United States Nuclear Regulatory Commission
Protecting People and the Environment

78

The staff used these SRP sections, standards and RG in its review of the applicants proposed qualification program.

Equipment can be qualified by tests or analyses.

However, analyses alone is only acceptable if the function of the equipment is determined by its structural integrity alone.

Testing must simulate actual conditions.

Guidance is provided on defining the loads for testing or analysis and the number of tests required.

Although the staff has not accepted the generic usage of seismic experience data from either evolutionary or passive plants, in accordance with RG 1.100, Revision 2, the COL applicant may use this method of qualification, subject to review by the staff on a case-by-case basis. Details of the experience data base must be provided and it must be demonstrated that equipment identified in the data base remained functional after an SSE and the equivalent effect of 5 postulated OBEs in combination with relevant static and dynamic loads.

For the AP1000 Seismic qualification based on experience is performed in accordance with Section 9.0 of IEEE 344-1987 on a case-by-case basis. In such cases where experience data are used, aspects of the methodology, qualification basis, and supporting data will be properly documented by the Combined License applicant.

RG 1.97 – Criteria for Accident Monitoring Instrumentation for Nuclear Power Plants.

Seismic and Dynamic Qualification of SSCs

- COL Items:
  - Demonstrate that the site specific qualification parameters are included in its qualification program.
  - Will create and maintain equipment qualification files.

U.S.NRC
United States Nuclear Regulatory Commission
Protecting People and the Environment

79

The DCD does not include any site specific information. It only lays out the criteria and methodology for qualification.

The COL applicant has the responsibility for using the certified criteria and methodology to demonstrate make sure the site specific environmental and seismic conditions are included in the plant specific seismic qualification program.

The equipment qualification files must include the individual Equipment Qualification Data Packages (EQDP) including seismic test reports.

The seismic qualification files will be maintained available for audit.

SER Evaluation Findings (3.7, 3.8, and 3.10)

- GDC 1, 2, and 4 and App B apply to all Seismic Category I structures.
- GDC 16, 50, 51 and 53 also apply to containment design and inspection.
- The staff found that the AP1000 seismic design and qualification acceptable based on:
  - Appropriate ASME and other industry codes and standards.
  - Appropriate qualification criteria and methodologies.
- The COL applicant must implement a site specific seismic qualification program.

U.S.NRC
United States Nuclear Regulatory Commission
Protecting People and the Environment

80

SER Sections

3.9 Mechanical Systems and Components

3.12 Piping Design

U.S.NRC
United States Nuclear Regulatory Commission
Protecting People and the Environment

81

These are the SER sections we are going to talk about now.

Learning Objectives (3.9 and 3.12)

- Class Participants are expected to understand:
  - Regarding the design of mechanical systems and components:
    - Applicable GDC.
    - Classes of design loads.
    - Qualification of computer codes.
    - Design criteria and methods.
    - Dynamic testing and analyses.

U.S.NRC
United States Nuclear Regulatory Commission
Protecting People and the Environment

82

These are the areas we will cover in this session. Piping will be included in the discussion.

These areas basically align with the steps in design, i.e.:

- establish the design objectives,
- define the conditions and loads to be considered,
- qualify the computer codes to be used in performing the design,
- establish design criteria and methods, and
- require analyses and testing to verify the design.

Applicable GDC

The following GDC apply to all aspects of design:

- GDC 1 – quality standards.
- GDC 2 – design for seismic events.
- GDC 4 – protection against discharging fluids.
- GDC 14 – extremely low probability of RCPB leakage or rupture.
- GDC 15 – design to assure RCPB design conditions are not exceeded.

U.S.NRC
United States Nuclear Regulatory Commission
Protecting People and the Environment

83

These GDC apply to all aspects of mechanical systems and component designs.

Applicable GDC

Additional GDC for specific design features:

- CRD system
  - GDC 26 – independent CRDS reactivity control system margin.
  - GDC 27 – sufficient margin CRDS in conjunction with ECS to control reactivity and core cooling.
  - GDC 29 – extremely high probability of accomplishing its safety function.
- RPV internals
  - GDC 10 – design to ensure fuel design limits are satisfied.

U.S.NRC
United States Nuclear Regulatory Commission
Protecting People and the Environment

84

In addition to the GDC on the previous slide, additional GDC apply to the design of specific systems and activities.

With regard to the control rod drive system:

- GDC 26, as it relates to CRDS, requires that the CRDS be one of the independent reactivity control systems that is designed with appropriate margin to assure its reactivity control function under conditions of normal operation, including anticipated operational occurrences.
- GDC 27, requires that the CRDS be designed with appropriate margin, and in conjunction with the emergency core cooling system, be capable of controlling reactivity and cooling the core under postulated accident conditions.
- GDC 29, requires that the CRDS, in conjunction with reactor protection systems, be designed to assure an extremely high probability of accomplishing its safety functions in the event of anticipated operational occurrences.

With regard to RPV internals:

- GDC 10 requires that reactor internals be designed with appropriate margin to assure that specified acceptable fuel design limits are not exceeded during any condition of normal operation, including the effects of anticipated operational occurrences.

Applicable GDC

Additional GDC for specific design features:

- Inservice testing of pumps and valves.
  - GDC 37 – design of ECCS to permit functional testing.
  - GDC 40 – periodic functional testing of containment heat removal.
  - GDC 46 – design for functional testing of cooling water system.
  - GDC 54 – design for testing of containment isolation valves.

U.S.NRC
United States Nuclear Regulatory Commission
Protecting People and the Environment

85

GDC 37: requires designing the emergency core cooling to permit periodic functional testing to ensure the leak tight integrity and performance of its active components.

GDC 40: requires designing periodic functional testing of the containment heat removal system to ensure the leak tight integrity and performance of its active components.

Need to determine how do GDC 37 and 40 apply in the passive design.

GDC 46: requires designing the cooling water system to permit periodic functional testing to ensure the leak tight integrity and performance of the active components.

GDC 54: requires designing piping systems penetrating containment with the capability to test periodically the operability of the isolation valves and determine valve leakage acceptability.

Design Loads

- Magnitude and number of design condition loadings are reviewed:
  - Service Level A – Normal Conditions.
  - Service Level B – Upset Conditions.
  - Service Level C – Emergency Conditions.
  - Service Level D – Faulted Conditions.

U.S.NRC
United States Nuclear Regulatory Commission
Protecting People and the Environment

86

The number and magnitude of different design loading conditions is reviewed by the staff. These loadings are used as input to ASME code design procedures.

The loading conditions are classified into service levels. These service levels correspond to different operating, transient and postulated accident conditions.

Typical loading conditions:

Service Levels A (Normal Conditions):
- Reactor coolant pump startup and shutdown
- Plant heatup and cooldown
- Unit loading and unloading between 0 and 15 percent of full power
- Unit loading and unloading at 5 percent of full power per minute
- Step load increase and decrease of 10 percent of full power
- Large step load decrease with steam dump
- Steady-state fluctuations and load regulation

Service Level B (Upset Conditions):
- Loss of load
- Loss of power
- Reactor trip from reduced power
- Reactor trip from full power

Service Level C (Emergency Conditions):
- Small loss of coolant accident
- Small steam line break
- Complete loss of flow
- Small feedwater line break
- Steam generator tube rupture
- Inadvertent opening of automatic depressurization system valves

Service Level D (Faulted Conditions):
- Reactor coolant pipe break (large loss-of-coolant accident)
- Large steam line break
- Large feedwater line break
- Reactor coolant pump locked rotor
- Control rod ejection

Computer Code Qualification

- In accordance with the QA program (DCD Chapter 17).
- Meets 10 CFR 50 App B.

U.S.NRC
United States Nuclear Regulatory Commission
Protecting People and the Environment

87

The staff reviews how computer codes were developed, verified and validated, and maintained.

Computer codes are subject to error reporting and resolution consistent with the approved QA program which meets App B.

Design Criteria and Methods

- Pressure retaining components, core support structures, component supports.
  - AP1000 Class A, B, or C.
  - Designed to ASME Code Class 1, 2, or 3.

U.S.NRC
United States Nuclear Regulatory Commission
Protecting People and the Environment

88

The staff reviewed the application for consistency of defined Equipment Classes with applicable portions of the ASME Code.

ASME Code Section III Design criteria and design methods are applied to the design of pressure retaining components, core support structures, and component supports.

The specific Code Class 1, 2, or 3 design rules are applied depending on the component AP1000 classification as we discussed in Section 3.2.2.

Recall that AP1000 Class A refers to unisolable portions of the RCPB which are designed to ASME Code Class 1.

Class B includes portions of the ECCS, Post Accident Containment Heat Removal System, Rx Shutdown System, Residual Heat Removal and Steam and Feedwater Systems. These systems are designed to ASME Code Class 2.

Class C includes Water, Steam and radioactive waste system components. These components are designed to ASME Code Class 3.

Add some brief comments on the difference between ASME Class 1, 2, and 3 design rules.

Design Criteria and Methods

Piping design:

- Design acceptance criteria (DAC)
  - Approved limits, parameters, procedures and attributes.
  - COL applicant completes piping design to meet DAC.

U.S.NRC
United States Nuclear Regulatory Commission
Protecting People and the Environment

89

Design of all piping systems is not complete before final design certification because it depends on as-built and as-procured information.

The NRC approves a set of Design Acceptance Criteria which specify the limits, parameters, procedures and attributes for piping design.

ASME Code is relied on heavily for providing acceptance criteria and design rules.

The COL applicant is responsible for completing the piping design.

The NRC staff generally reviews a sample of piping system designs completed before certification to verify the analysis methods. If the COL applicant uses a different computer code for the final design, it must be benchmarked per NRC guidance.

Design Criteria and Methods

Piping design:

- ASME Code 1989 Edition including 1989 Addenda, Articles NB-3200, NB-3600, NC-3600 and ND-3600.
- Fatigue evaluation in accordance with ASME Section III as modified for environmental effects.

U.S.NRC
United States Nuclear Regulatory Commission
Protecting People and the Environment

90

There is a lot to discuss on this and the next slide:

NB-3200 covers: Design of vessels
NB-3600 covers: Design of piping
NC-3600 covers: Class 2 materials
ND-3600 covers: Class 3 materials

3.12.5.7 Fatigue Evaluation for ASME Code Class 1 Piping

Section III of the ASME Code requires that the cumulative damage from fatigue be evaluated for all ASME Code Class 1 piping. The cumulative fatigue usage factor should consider all cyclic effects caused by the plant operating transients for a 60-year design life. However, current test data indicated that the ASME Code, Section III design fatigue curves may not be conservative for Class 1primary system environments or for ASME Class 2 and 3 environments. The ASME was in the process of assessing the effects of the environment on the Section III design fatigue curves.

The staff had not yet established a final position on this issue to be imposed for all new plant designs.

The staff concluded that the AP1000 design met current ASME Code, Section III, fatigue requirements for Class 1piping, and that in the future, holders of licenses for AP1000 plants will have to address the environmental effect on fatigue design if they seek to renew those licenses and will use the criteria acceptable to the staff at that time. (IS THE AP1000 LICENSE ONLY GOOD FOR 40 YEARS? OR DOES THIS REFER TO RENEWAL BEYOND 60 YEARS?) On that basis, the staff found the Class 1 piping fatigue design acceptable for design certification.

CONTINUED ON NEXT SLIDE

Design Criteria and Methods

Piping design (continued)

U.S.NRC
United States Nuclear Regulatory Commission
Protecting People and the Environment

91

3.12.5.8 Fatigue Evaluation of ASME Code Class 2 and 3 Piping

The staff concluded the only high fatigue Class 2 and 3 components in the AP1000 design are the steam generator secondary side nozzles. These nozzles were designed to Class 1 rules which the staff concluded was sufficiently conservative to account for environmental effects.
The staff noted that any Class 1 fatigue evaluations for Class 2 or 3 components should treat the effects of environment in the same manner as discussed above.

CURRENT STATUS:

RG 1.207 dated July 2006 provides guidance on acceptable methods of fatigue evaluation based on review of new fatigue data.

The approach involves using the original ASME design curve (S vs. N) for carbon and low alloy steels and a modified design for Austenitic and Ni-Cr-Fe alloys. An environmental correction factor Fen is applied to the calculated fatigue life. In addition, a strain threshold is provided below which it is assumed there are no environmental effects.

[Additional background info re fatigue:

In SECY-95-245, “Completion of the Fatigue Action Plan,” the NRC staff concluded that based on component sample evaluations including fatigue environmental effects, the fatigue limit would not be exceeded for most components, and that a fatigue failure of piping is not a significant contributor to core-melt frequency. Therefore, no further evaluation of fatigue environmental effects on operating plants was needed. The evaluations were based on typical component designs of plants with a 40-year design life.

Work continued in this area to support license renewal and operation beyond 40 years. The EPRI Materials Reliability Program Integrated Task Group on Fatigue Issues and the Pressure Valve Research Committee (PVRC) Steering Committee on Cyclic Life and Environmental Effects was developing approaches to deal with this issue. (See PVRC draft report, “Assessment of Environmental Effects on Fatigue Life in LWR Nuclear Applications.”) The staff had not completed a review of these approaches and is funding its own studies (See NUREG/CR-6583, “Effects of LWR Coolant Environments on Fatigue Design Curves of Carbon and Low-Alloy Steels,” and NUREG/CR-5704, “Effects of LWR Coolant Environments on Fatigue Design Curves of Austenitic Stainless Steels,” which provide new environmental fatigue test data.]

Design Criteria and Methods

Piping design:

- Functional capability in accordance with NUREG-1367, functional capability of piping systems.
- Design against intersystem LOCA in accordance with SECY 90-016.
- Piping and instrument line supports designed in accordance with ASME Section III, Subsection NF.
- Baseplate design complies with BL 79-02, Rev. 2.

U.S.NRC
United States Nuclear Regulatory Commission
Protecting People and the Environment

92

NUREG 1367 and piping functional capability

All ASME Code Class 1, 2, and 3 piping systems that are essential for safe shutdown must retain their functional capability for all Service Level D loading conditions as required by GDC 2.

The staff accepts designs meeting the recommendations in NUREG-1367, “Functional Capability of Piping Systems,” as satisfying the functional capability requirements. The recommendations include stress limits and methods for treating dynamic loads.

INTERSYSTEM LOCA

Staff recommendations for addressing ISLOCA were approved in SECY-90-016. Low pressure piping systems that interface with the RCS must be designed to provide low probability of failure if subject to RCS pressure:

- 10% conditional containment failure probability,
- Low probability of intolerable leakage of flanges or valve bonnets,
- Gross yielding and permanent deformation allowed.

BULLETIN 79-02, BASE PLATES

The assumption of rigid base plates underestimated the loads on the anchor bolts and resulted in loosened anchor bolts. The bulletin required consideration of baseplate flexibility and cyclic loading be included in design.

Design Criteria and Methods

- RPV internals are ASME III Class CS and are designed to ASME III, Subsection NG.
- CRD system
  - Pressure retaining portions are designed as ASME Class 1.
  - CRDM performance assurance program.

U.S.NRC
United States Nuclear Regulatory Commission
Protecting People and the Environment

93

In addition to assuring pressure retaining capability by designing to the ASME code, the CRDM performance assurance program confirms functionality of the fuel assembly, CRDM and rod cluster control assembly through trip time testing prior to operation and consistent with the technical specifications. Drop time testing is also performed during each refueling outage.

Dynamic Testing and Analysis

- The AP1000 IST plan does not include any pumps.
- Testing of safety-related valves is in accordance with ASME OM, Subsection ISTC.

U.S.NRC
United States Nuclear Regulatory Commission
Protecting People and the Environment

94

Due to the passive design, the only safety related function performed by a pump is the coastdown of the RCP.

Coastdown testing of the RCP is not testable and the staff concluded it did not need to be included in the IST program.

Therefore, there are no safety related valves to include in the IST program.

Add some discussion on the OM code.

Thermal Stratification, Cycling and Striping

- Bulletin 79-13, cracking in feedwater system piping.
- AP1000 has separate main and startup feed water lines/nozzles.
- Feedwater stability is controlled.
- Switch over from low flow startup line to full flow main line.

U.S.NRC
United States Nuclear Regulatory Commission
Protecting People and the Environment

95

Bulletin 79-13 (Reference 16) was issued as a result of a feedwater line cracking incident at Donald C. Cook Unit 2 discovered in May 1979. This bulletin required that inspections of operating plant feedwater lines be performed. This resulted in the discovery of cracks in the feedwater lines of several plants. A Feedwater Line Cracking Owners Group concluded that the primary cause of the cracking was thermal fatigue loading induced by thermal stratification and high-cycle thermal striping during low flow auxiliary feedwater injection. The mode of failure was concluded to be corrosion fatigue. This information is documented in WCAP-9693 (Reference 17).

To address this issue the AP1000 steam generators are:

Equipped with separate nozzles for the main feedwater and startup feedwater lines. Thermal stratification is prevented in the main feedwater line based on the flow rate limitations within the main feedwater line and the flow control stability for feedwater control. Low feedwater flow is provided by the startup feedwater line while higher feedwater flow rates are provided and controlled via the main feedwater line. The switchover from the startup to the main feedwater line occurs above a minimum flow rate to prevent thermal stratification for limiting temperature deviations.

Analyzed to show the feedwater nozzles meet the applicable requirements of the ASME Section III Code.

Thermal Stratification, Cycling and Striping

- Bulletin 88-08, thermal stresses in piping connected to reactor coolant systems.
  - Criteria were developed to identify susceptible piping.
  - Susceptible piping was evaluated in accordance with ASME Code Section III.

U.S.NRC
United States Nuclear Regulatory Commission
Protecting People and the Environment

96

Bulletin 88-08 (supplements 1 – 3)

Bulletin 88-08, Supplement 1, Supplement 2, and Supplement 3 (Reference 12) were issued following the discovery of cracks in unisolable piping at several nuclear power plants. These cracks were attributed to unanalyzed thermal stresses resulting from isolation valve leakage.

The following criteria were used to evaluate lines with the potential for thermal stresses:

- Single isolation valves can leak, regardless of design except for explosively actuated valves.
- It is generally assumed that two or more closed valves in series are sufficient to limit the amount of leakage to a magnitude which would have a negligible effect on piping integrity.
- Valves which have external operators may leak through the valve seat and packing. In the case of leaking through the packing, additional in-series closed valves may not be beneficial.
- A positive pressure difference should be considered as a possible leak source.
- Cross-leakage is possible between interconnected lines that are attached to different reactor coolant loop pipes and are isolated by single check valves.
- Sections of piping systems which have a slope of greater than 45 degrees from the horizontal plane are not subject to thermal stratification, cycling and striping thermal loadings.
- Pipe lines, or sections of lines less than or equal to 1-inch nominal size do not require a thermal stratification, cycling and striping evaluation.
- Lines identified as having high potential for thermal stratification were analyzed for the loads using ASME Section III.

Thermal Stratification, Cycling and Striping

- Bulletin 88-11, pressurizer surge line stratification.
  - AP1000 surge line is designed for thermal loads.
  - First plant will monitor thermal loads during startup and for one cycle.

U.S.NRC
United States Nuclear Regulatory Commission
Protecting People and the Environment

97

Bulletin 88-11:

Bulletin 88-11 (Reference 14) was issued after problems with whip restraint gap sizes occurred on the pressurizer surge line at Trojan plant. Gap changes were being caused by plastic deformation in the surge line piping resulting from excessive thermal loads caused by thermal stratification.

Analysis of the AP1000 surge line considers thermal stratification and thermal striping, and demonstrates that the surge line meets applicable code requirements for the licensed life of the plant. Hot functional testing requirements for the AP1000 ensure that piping thermal deflections result in no adverse consequences.

As part of the Westinghouse Owners Group program on surge line thermal stratification, Westinghouse collected surge line physical design and plant operational data for all domestic Westinghouse PWRs. In addition, Westinghouse collected surge line monitoring data from approximately 30 plants. This experience was used in the development of the AP1000 thermal stratification loadings. As described in the AP1000 Conformance to Request 3 of Bulletin 88-11, monitoring will be performed during hot functional testing and during the first cycle of the first AP1000 plant. This Combined License item is identified in DCD subsection 3.9.8.5. Subsequent monitoring of the AP1000 surge line is not required.

Dynamic Testing and Analysis

- Piping vibration, thermal expansion, and dynamic effects.
- Dynamic response analysis of reactor internals under operational flow transients and steady-state conditions.
- Pre-operational flow-induced vibration testing of reactor internals.
- Dynamic system analysis of the reactor internals under faulted conditions.
- Correlation of reactor internals vibration tests with the analytical results.

U.S.NRC
United States Nuclear Regulatory Commission
Protecting People and the Environment

98

The staff reviews analyses, preoperational and startup test plans to verify proper dynamic performance including vibrational and thermal expansion responses.

The specific tests are discussed in greater detail under Chapter 14.

COL Items

- Complete design specifications and design report including:
  - Addressing MRP reactor internals reliability project.
  - Reconciliation of as-built piping.
- Provide a benchmark program if different codes are used for piping design.
- Provide predicted reactor internals vibration response.
- Provide the IST program.
- Verify operability of essential snubbers.

U.S.NRC
United States Nuclear Regulatory Commission
Protecting People and the Environment

99

Predicted reactor internals vibration response to design conditions must be provide before pre-operational testing to provide a benchmark and verification for the analyses.

The design reports must:

- Show how findings from the industry's ongoing program to evaluate reactor vessel internals issues are incorporated in the AP1000 design,

and

- Provide reconciliation of as-built piping which addresses thermal cycling and stratification loads per the bulletins that were discussed.

Note that the COL applicant must provide an IST program for valves based on the most recently endorsed version of the ASME OM CODE in accordance with 10 CFR 50.55a.

SER Evaluation Findings (3.9 and 3.12)

- NRC found AP1000 design of mechanical systems and components and piping acceptable based on:
  - Design basis loadings are classified as Service Levels A – D.
  - Computer codes receive proper QA.
  - Testing and analyses are done to verify dynamic performance.
  - AP1000 Class A, B, C SSCs are designed to ASME Code Section III.
  - Inservice testing of valves meets ASME OM Code.

U.S.NRC
United States Nuclear Regulatory Commission
Protecting People and the Environment

100

Read points on slide.

Learning Objectives (3.11)

- Class Participants are expected to understand:
  - Identifying equipment to be qualified.
  - Defining environmental conditions.
  - Qualification tests and analysis methods.
  - COL applicant implementation of EQ program.

U.S.NRC
United States Nuclear Regulatory Commission
Protecting People and the Environment

101

Summarize the learning objectives from the slide.

GDC, Regulations, and RGs

- GDC 1, regarding quality standards.
- GDC regarding design for environmental effects.
- GDC 23, regarding protection system failure modes.
- 50.49, environmental qualification of electrical equipment important to safety.
- 50.67, accident source term.
- 10 CFR 50 App B, Quality Assurance.

U.S.NRC
United States Nuclear Regulatory Commission
Protecting People and the Environment

102

Summarize the bullets on the slide.

Note that: GDC 23 requires that the protection systems will fail in a safe mode. Meeting GDC 23 provides assurance that the failure mode of protection system components is considered in the environmental design and qualification process.

Also:

In December 1979, the staff issued NUREG-0588 “Interim Staff Position on Environmental Qualification of Safety-Related Electrical Equipment,” in to promote a more orderly and systematic implementation of equipment qualification programs by industry and to guide the staff in ongoing licensing reviews. This was before 50.49 was in effect.

The positions in NUREG-0588 provide guidance on the following items:

- how to establish environmental qualification (EQ) service conditions;
- how to select appropriate methods for qualifying equipment in different areas of the plant;
- margin, aging, and documentation.

50.49 became effective in January 1983. In addition, there are numerous RGs available today. I’ll say more about these later.

Equipment Requiring Qualification

- Emergency reactor shutdown.
- Containment isolation.
- Rector core cooling.
- Containment heat removal.
- Reactor heat removal.
- Otherwise significant in preventing release of radioactive material.

U.S.NRC
United States Nuclear Regulatory Commission
Protecting People and the Environment

103

Electrical, mechanical and I&C (including digital I&C) meeting these criteria are included in the scope of Environmental Qualification.

The staff uses these criteria to verify that the list of equipment in the DCD that is selected for environmental qualification.

The staff's review of the DCD focused on evaluating:

- The applicant's approach to selecting and identifying equipment required to be environmentally qualified for the AP1000 design,

- Qualification methods proposed.

The staff will evaluate implementation of the EQ program for specific plants as part of the COL application review.

Definition of Environment

- Temperature, pressure, humidity, radiation, chemicals, and submergence.
- Radiation
  - Exposure through end of qualified life including post accident.
  - Exposure from limiting DBA (Chapter 15).
  - Harsh and mild environments.
- NUREG-1465, Accident Source Terms.

U.S.NRC
United States Nuclear Regulatory Commission
Protecting People and the Environment

104

Effects of temperature, pressure, humidity, radiation, chemicals, and submergence are considered in qualifying equipment.

The radiation qualification for individual safety-related components should be developed on the basis of the following two conditions:

(1) the radiation environment expected at the component location from equipment installation to the end of qualified life, including the time the equipment is required to remain functional after the accident.

(2) the limiting DBA for which the component provides a safety function.

Chapter 15 discusses the DBA conditions.

For the LOCA source term, the AP1000 design adopted the accident source term presented in NUREG-1465, “Accident Source Terms for Light-Water Nuclear Power Plants—Final Report.” The staff found this acceptable.

Definition of a mild radiation environment:

For electronic components, such as semiconductors, or any electronic component containing organic materials = a total integrated dose of less than 10 gray (Gy) (1E3 rad).

For other equipment, it is less than 10E2 Gy (1E4 Rad).

Definition of a harsh radiation environment:

Above [1E2 Gy (1E4 rads)] gamma [10 Gy (1E3 rads)] for electronics).

Qualification Methods

- Testing identical equipment under identical conditions or under similar conditions with a supporting analysis.
- Testing a similar equipment with supporting analysis.
- Experience with identical or similar equipment under similar conditions with a supporting analysis.
- Analysis in combination with partial type test data to verify the analyses assumptions.

U.S.NRC
United States Nuclear Regulatory Commission
Protecting People and the Environment

105

These are the four methods that can be used for qualifying equipment.

In addition, equipment in a harsh environment must be evaluated to determine if a sequential test which includes aging, radiation, and the applicable seismic event is required or if sufficient documentation exists to preclude such a test.

As part of the DCD review, the staff evaluates the methods of qualification defined in the DCD. However, the actual equipment qualification must be based on the plant specific equipment and is the responsibility of the COL applicant. So the staff reviews application of the qualification methods when it does the COL review.

Qualification Methods

- SRP Section 3.11 identifies numerous RGs related to specific qualifications of specific components.

U.S.NRC
United States Nuclear Regulatory Commission
Protecting People and the Environment

106

There are too many applicable RGs to list here. They include:

1.89 - Electrical equipment
1.97 - Instrumentation
1.209 - Digital I&C
1.40 - Motors
1.63 - Electrical Penetrations
1.73 - Valve Operators
1.131 - Cables
1.156 - Electrical Connectors
1.158 – Batteries

The staff used these in its review.

COL Item

The COL applicant is responsible for maintaining the equipment qualification file during the equipment selection and procurement phase.

U.S.NRC
United States Nuclear Regulatory Commission
Protecting People and the Environment

107

In Revision 1 of RG 1.89, the staff specifies guidelines for complying with the rule. In accordance with 10 CFR 50.49(d), the COL applicant shall prepare a list of electrical equipment important to safety covered by the qualification requirements. In addition, the COL applicant shall include the following information for electrical equipment important to safety in a qualification file:

(1) the performance specifications under conditions existing during and following DBAs.

(2) the voltage, frequency, load, and other electrical characteristics for which the performance specified in accordance with (1) above can be ensured.

(3) the environmental conditions, including temperature, pressure, humidity, radiation, chemicals, and submergence at the location where the equipment must perform as specified in accordance with (1) and (2) above.

Pursuant to 10 CFR 50.49(j), the COL applicant shall keep the list and information in the file current and retain the file in auditable form for the entire period during which the covered item is installed in the nuclear power plant or is stored for future use to permit verification that each item of electrical equipment important to safety (1) is qualified for its application, and (2) meets is specified performance requirements. To conform with 10 CFR 50.49, electrical equipment for PWRs referencing the AP1000 design should be qualified according to the criteria in Category I of NUREG-0588 and Revision 1 of RG 1.89. This is COL Action Item 3.11.2-1.

Appendices A and B to 10 CFR Part 50 contain the principal qualification requirements for mechanical equipment. The qualification methods defined in NUREG-0588 also apply to mechanical equipment.

Summary

- NRC review of the DCD included:
  - Scope of equipment included in EQ.
  - Definition of environments.
  - Methods for qualification.
- COL review includes:
  - Application methods approved in the DCD to the specific plant.
- COL applicant must implement EQ program.

U.S.NRC
United States Nuclear Regulatory Commission
Protecting People and the Environment

108

Summarize using the points on the slide.

AP1000 Reactor Coolant and Connected Systems

Module 18
SER Sections 5.1, 5.2, 5.3, 5.4.2

INSTRUCTOR: Jack Strosnider
October 2008

U.S.NRC
United States Nuclear Regulatory Commission
Protecting People and the Environment

109

SER Sections

5.1 Reactor Coolant System Summary Description

5.2 Integrity Of Reactor Coolant Pressure Boundary (RCPB)

U.S.NRC
United States Nuclear Regulatory Commission
Protecting People and the Environment

110

These are the SER sections we are going to talk about now.

Learning Objectives (5.1 and 5.2)

- Class Participants are expected to understand:
  - Applicable GDCs.
  - Design codes and standards.
  - Provisions for overpressure protection.
  - Requirements for RCPB inservice inspection and testing.
  - RCPB leakage detection requirements.

U.S.NRC
United States Nuclear Regulatory Commission
Protecting People and the Environment

111

Summarize the areas to be discussed from the slide.

Reactor Coolant System

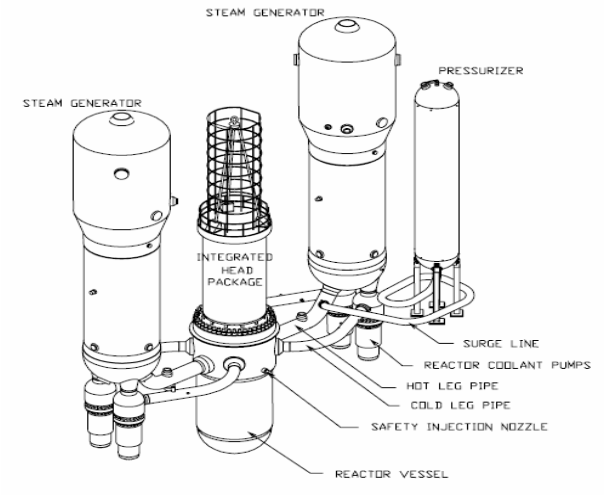

U.S.NRC
United States Nuclear Regulatory Commission
Protecting People and the Environment

112

The reactor coolant system consists of:

- Two heat transfer loops with two cold legs and one hot leg;
- Two u-tube steam generators;
- Two reactor coolant pumps per loop;
- A pressurizer connected to the hot leg of one recirculation loop via the pressurizer surge line.

Curved piping eliminates the need for elbows. (Limits are established on the amount of curvature and ovality.)

Safety functions provided by the RCS include:

1) The pressurizer safety valves provide overpressure protection in accordance with Section III of the ASME Boiler and Pressure Vessel Code.
2) The reactor coolant pumps (RCPs) have a rotating inertia to provide RCS flow coastdown on loss of power to the pumps.
3) Each RCP flywheel assembly can withstand a design overspeed condition.
4) The RCS provides automatic depressurization during design basis events.
5) The RCS provides emergency letdown during design basis events.

The RCS also:

1) Provides circulation of coolant to remove heat from the core.
2) Provides the means to control system pressure.

Reactor Coolant Pressure Boundary (RCPB)

- Applicable GDC and regulations.
  - RCPB GDC 1 quality standard requires that the RCPB be designed, fabricated, erected and tested to quality standards commensurate with the importance of its safety functions.

U.S.NRC
United States Nuclear Regulatory Commission
Protecting People and the Environment

113

Read the slide.

Note, as we will see, the highest quality classification and ASME code class is applied to the RCPB to provide a very low probability of leakage.

ASME Code and Code Cases

- 10 CFR 50.55A incorporates the ASME Code by reference:
  - In accordance with 10 CFR 50.55, the RCPB is QG A, ASME Section III Class 1.
  - Isolable components are QG C, ASME Section III Class 3.
  - RCPB components are designed and fabricated in accordance with ASME Code Section III, with exception of a portion of the CVS.
  - The 1998 Edition through 2000 Addenda is the baseline ASME Code.
  - More recent code editions may be permitted or required.
  - The COL applicant must address consistency of design and construction practices at the time of license application.

U.S.NRC
United States Nuclear Regulatory Commission
Protecting People and the Environment

114

The staff reviewed the application for consistency with these requirements.

A portion of the chemical and volume control system inside containment is not classified as safety-related. The nonsafety-related portion of the chemical and volume control system inside containment provides purification of the reactor coolant and includes heat exchangers, demineralizers, filters and connecting piping. The nonsafety-related portion of the chemical and volume control system was classified as QG D. designed using ANSI B31.1 and ASME Code, Section VIII for the construction of the piping, valves, and components; and was analyzed seismically using Seismic Category II methods and criteria.

The following design enhancements were provided to address this portion of the CVS:

- This portion of the CVS is designed to a design pressure of 21.4 MPa (3100 psi), which exceeds the RCS design pressure,
- The isolation valves between the RCS and the CVS are ASME Class 1 valves are designed and qualified for design conditions that include closing against blowdown full flow with full system differential pressure,
- The AP1000 design also contains a third valve in each of the lines that connect the RCS and CVS,
- During each refueling outage these valves will be leak tested to the same leak rate criteria that is specified in the AP1000 TS for pressure isolation valves,
- Those portions of CVS piping inside containment are analyzed to seismic Category II piping design criteria, and
- All of the Class D portion of the CVS is constructed of or clad with corrosion-resistant material, such as Type 304 or Type 316 stainless steel, that is compatible with the reactor coolant.

ASME Code and Code Cases

- Code cases approved in RGs:
  - RG 1.84, “Design And Fabrication Code Case Acceptability, ASME Section III, Division 1.”
  - RG 1.147, “Inservice Inspection Code Case Acceptability, ASME Section XI, Division 1.”
  - RG 1.192, “Operation And Maintenance Code Case Acceptability, ASME OM Code.”

U.S.NRC
United States Nuclear Regulatory Commission
Protecting People and the Environment

115

This slide lists the RGs that provide approved code cases for design, inspection and operation and maintenance (valve testing).

The staff reviewed the application for consistency with approved code cases.

ASME Code and Code Cases

- Code cases approved at time of design certification may be used.
- Code cases approved subsequent to certification may be used by COL applicant.
- Code cases not approved in RGs must be approved by NRC in accordance with 10 CFR 50.55A(A)(3).

U.S.NRC
United States Nuclear Regulatory Commission
Protecting People and the Environment

116

Summarize the points on the slide.

Overpressure Protection

- Pressurizer safety valves provide protection during power operation.
- Cold overpressurization is provided by:
  - Administrative controls.
  - RCS protection system/RNS relief valve.
- Steam system overpressure protection is provided by the SG safety valves.

U.S.NRC
United States Nuclear Regulatory Commission
Protecting People and the Environment

117

RCPB overpressure protection at power:

Pressurizer safety valves are sized based on a conservative analysis of a turbine trip with complete loss of steam flow at 102% power and limiting pressure to less than 110% of design.

A single malfunction or failure of an active component should not preclude safety-related portions of the system from functioning as required during normal operations, adverse environmental occurrences, and accident conditions, including loss of offsite power. However, full credit is allowed for spring-loaded safety valves designed in accordance with the requirements of ASME Code Article NB-7511.1. Does this apply to the PZR safety valves?

The pressurizer safety valves are qualified by an EPRI program.

Low temperature over pressure protection:

Administrative controls and procedures maximize use of a steam or gas bubble in the pressurizer.

The set pressure for the RNS relief valve is the lesser of 110% of design pressure or the ASME Section III App G Pressure-Temperature Limits. Provides protection against events with a “water solid” pressurizer:

- Makeup/letdown flow mismatch.
- Inadvertent actuation of the pressurizer heaters.
- Loss of residual heat removal with reactor coolant system heatup due to decay heat and pump heat.
- Inadvertent start of one reactor coolant pump.
- Inadvertent hydrogen addition.

Operation of the RNS system relief valve is consistent with BTP 5-2, meeting IEEE Standard 603 and being single failure proof.

The set pressure for the normal residual heat removal system relief valve is established based on the lower value of the normal residual heat removal system design pressure and the low-temperature pressure limit for the reactor vessel based on ASME Code, Section III, Appendix G, analyses and BTP 5-3. The pressure-temperature limits for the reactor vessel, based on expected material properties and the vessel design, are discussed in subsection 5.3.3.

Pressure-Temperature Limits

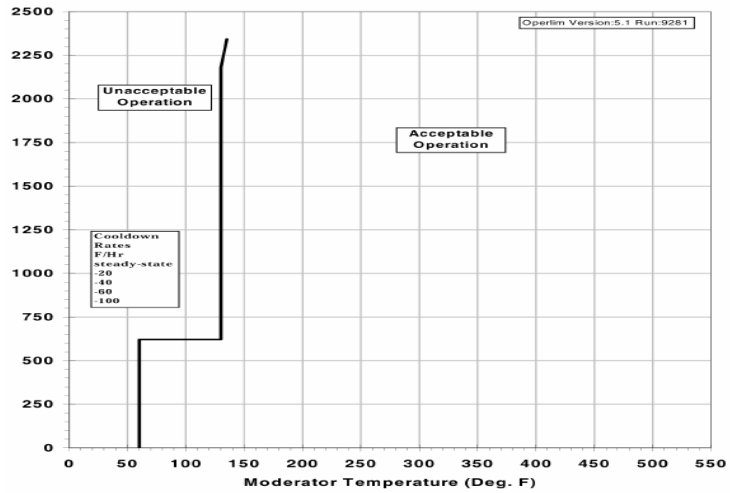

U.S.NRC
United States Nuclear Regulatory Commission
Protecting People and the Environment

118

These are the pressure-temperature limits for reactor cool down, based on 10 CFR 50 App G and BTP 3-3.

Describe the features of the limitations:

- The LTOP enabling temperature is not less than RTndt + 50˚C.
- The technical specifications prohibit starting the reactor coolant pump with pressurizer level > 92% and RCS TEMP > 93.3˚C.

RCPB Materials

- RCPB material is covered in the module on Materials.

U.S.NRC
United States Nuclear Regulatory Commission
Protecting People and the Environment

119

Point out that material selection and fabrication requirements will be covered in one presentation.

RCPB Inspection and Testing

- Preservice and inservice inspection and testing must address:
  - Accessibility of components for inspection;
  - Examination categories and methods;
  - Inspection intervals;
  - Evaluation of examination results;
  - Repair methods;
  - System pressure tests.

U.S.NRC
United States Nuclear Regulatory Commission
Protecting People and the Environment

120

These are the key elements of the inspection and testing program reviewed by the NRC.

RCPB Inspection and Testing

- Applicable ASME Code requirements in accordance with 10 CFR 50.55a:
  - The baseline ASME Code is the 1998 Edition, 2000 Addenda of Section XI.
  - No relief requests as part of certification.
  - Future relief must be approved by NRC.
  - NRC guidance such as Generic Letters.

U.S.NRC
United States Nuclear Regulatory Commission
Protecting People and the Environment

121

RCPB inservice inspection and testing must be performed in accordance with Section XI of the ASME code.

Generic communications such as Generic Letters must also be addressed in the design certification. We will talk about an example of that in a few minutes.

ASME Section XI, Appendix VIII

- Ultrasonic examination procedures, equipment and personnel must be qualified in accordance with App VIII of Section XI.

U.S.NRC
United States Nuclear Regulatory Commission
Protecting People and the Environment

122

App VIII is a performance based qualification process in which capability and reliability of inspection procedures and personnel are demonstrated on a sample of components with artificial flaws.

Establishing a qualification process and facility to support an App VIII type qualification is a significant effort.

The qualification process is based on statistical analyses that eliminate poorly performing techniques or personnel.

The EPRI has established a center to conduct this type of qualification in Charlotte, North Carolina in the U.S.

RCPB Leakage Detection

- Provides reasonable assurance of timely detection of RCPB degradation.
- Supports leak-before-break.
- GDC 30 requires the ability to detect and identify leakage.
- GDC 2 requires leakage detection following an SSE.

U.S.NRC
United States Nuclear Regulatory Commission
Protecting People and the Environment

123

The purpose of the leakage monitoring system is to detect leaks that occur due to cracking or other forms of degradation in time to take action to prevent gross failure of the RCPB.

Recall from Module 16, SER Section 3.6 that all the RCPB piping greater than 6 inches (15.24 mm) are qualified for leak-before-break. For those pipes analyses have demonstrated that leakage will be taken before gross rupture of the pipe with sufficient confidence that the failure of the pipe does not need to be designed for. The ability to reach this conclusion requires confidence in the ability to detect leakage in a timely manner.

GDC 30 regarding Quality of the RCPB explicitly requires that means be provided for detecting and, to the extent practical, identifying the location of the source of reactor coolant leakage.

Leakage detection is important following an earthquake which can challenge the RCPB integrity.

RCPB Leakage Detection

- Identified leakage:
  - Leakage (such as pump seal or valve packing leakage) that is captured, flow-metered, and collected.
  - Leakage into the containment atmosphere from a known source, which does not interfere with the operation of unidentified leakage monitoring systems and is not attributable to leakage in the RCPB.

U.S.NRC
United States Nuclear Regulatory Commission
Protecting People and the Environment

124

RCPB leakage is leakage from the material of an RCS component such as a the wall or welds in a pipe or vessel. Leakage from seals, gaskets and mechanical connections, such as bolted connections, is not considered RCPB leakage.

RCPB Leakage Detection

- Unidentified leakage:
  - Any leakage that is not identified leakage.
  - Is indicative of RCPB degradation.

U.S.NRC
United States Nuclear Regulatory Commission
Protecting People and the Environment

125

Read slide.

Emphasize importance of timely response to unidentified leakage.

Technical specifications establish limits on unidentified leakage. LCO 3.4.7 addresses RCS leakage limits (10 gpm identified leakage).

Plants also establish administrative limits lower than the technical specification limits, and with limits on the rate of increase in leakage.

RCPB Leakage Detection

- RG 1.45, Guidance on Monitoring and Responding to RCS Leakage:
  - Discriminating between identified and unidentified leakage.
  - Leakage detection and monitoring accuracy.
  - Monitoring for intersystem leakage.

U.S.NRC
United States Nuclear Regulatory Commission
Protecting People and the Environment

126

The reactor coolant drain tank collection and monitoring system for identified leakage has the ability to identify 0.1 gpm in one hour and 10 gpm in less than one minute.

AP1000 has three diverse methods for detecting unidentified leakage:

- Containment Sump Level,
- Reactor Coolant System Inventory Balance, and
- Containment Atmosphere Radiation.

Methods for detecting intersystem leakage include:

- Increasing auxiliary system level, temperature, flow, or pressure, by lifting the relief valves, or

- Increasing the values of monitored radiation in the auxiliary system.

RCPB Leakage Detection

- RG 1.45, Guidance on Monitoring and Responding to RCS Leakage:
  - Sensitivity and response time.
  - Capability to function during and after an SSE.
  - Indicators in the main control room.

U.S.NRC
United States Nuclear Regulatory Commission
Protecting People and the Environment

127

The staff used the criteria in RG 1.45 to judge the acceptability of the applicants proposed leakage monitoring system.

The minimum detectable leak for the AP1000 design is 0.03 gpm and a change of 1.89 L/min (0.5 gpm) in 1 hour.

Leakage indication and alarms are provided in the control room and are qualified to perform following a SSE.

Steam Generator Primary-to-Secondary Leakage

- Special form of leakage; not treated as primary system leakage.
- Monitored by:
  - Condenser and turbine island vent radioactivity discharge monitors.
  - SG blowdown radiation monitor.
  - Main steam line radiation monitors.
  - Condensate radioactivity, boric acid and conductivity.

U.S.NRC
United States Nuclear Regulatory Commission
Protecting People and the Environment

128

Summarize the primary-to-secondary leakage monitoring method per the slide.

Primary-to-secondary leakage monitoring by the methods described are an important element in the program for ensuring steam generator tube integrity.

Boric Acid Inspection Program

- Generic Letter 88-05 program elements:
  - Identification of locations for leaks/boric acid concentration.
  - Procedures for inspection, examination, evaluation.
  - Corrective actions to prevent recurrence.

U.S.NRC
United States Nuclear Regulatory Commission
Protecting People and the Environment

129

Boric Acid corrosion has caused significant challenges to RCPB integrity.

Circa 1986:

- Turkey Point 4 – incore instrument tube seal leak corroded the RPV head and 3 bolts (up to 0.25 inches).
- Salem 2 – instrument penetration seal weld leak caused corrosion of vessel head (up to 0.36 inches).
- San Onofre 4 – Boric acid nearly corroded through valve packing holddown bolts on a shutdown cooling system isolation valve – when valve was operated the bolts failed resulting in 18,000 gallons of reactor coolant into the containment.
- Arkansas 1 – high pressure injection valve leak caused corrosion of high pressure injection nozzle (0.5 inches about 67% of RCPB).

I'll say more about RPV head degradation at Davis Besse when we talk about the RPV.

Summarize elements of program on the slide.

SER Evaluation Findings (5.1 and 5.2)

NRC found the AP1000 RCPB acceptable based on:

- ASME Code provides high quality of RCPB design.
- Overpressure protection is provided for low temperature and power operation.
- Inspection and testing is conducted in accordance with ASME Section XI; App G qualification.
- Acceptable leakage monitoring is provided for detecting RCPB degradation.
- An acceptable boric acid inspection program

U.S.NRC
United States Nuclear Regulatory Commission
Protecting People and the Environment

130

Summarize the points on the slide.

SER Section

5.3 Reactor Vessel

U.S.NRC
United States Nuclear Regulatory Commission
Protecting People and the Environment

131

These are the SER sections we are going to talk about now.

Learning Objectives (5.3)

- Class Participants are expected to understand:
  - Applicable GDC and regulations.
  - Uppershelf energy requirements.
  - Pressure-temperature limits.
  - Material surveillance program requirements.
  - Pressurized thermal (PTS) shock requirements.
  - Inspection requirements.

U.S.NRC
United States Nuclear Regulatory Commission
Protecting People and the Environment

132

Note that: RPV materials selection and fabrication will be covered in different Module.

GDC, Regulations, Codes and Standards

- GDC 1, GDC 14, GDC 30 and 50.55A are met by compliance with provisions of the ASME Boiler and Pressure Vessel Code and 10 CFR App B.

- GDC 14, Regarding Design Against Rapid Propagating Failure and GDC 31, Regarding Fracture Toughness, are met by compliance with:
  - 10 CFR 50 App G, Sections IV A and B,
  - Section III, Paragraph NB-2300,
  - P-T limits developed in accordance with 10 CFR 50 App B, ASME Code Section III, App G,
  - 10 CFR 50 App H, and
  - 10 CFR 50.61 Regarding Pressurized Thermal Shock.

U.S.NRC
United States Nuclear Regulatory Commission
Protecting People and the Environment

133

Summarize the GDC, Regulations, and Codes and Standards as presented on the slide.

GDC, Regulations, Codes and Standards

- GDC 32 and 10 CFR 50.55a regarding inservice inspection are satisfied by conformance with design in accordance with ASME Section III and inspection in accordance with ASME Code Section XI (See Section 5.2.4).
- Acceptance criteria for shipment and installation are provided in SRP Section 5.2.3.

U.S.NRC
United States Nuclear Regulatory Commission
Protecting People and the Environment

134

Note the importance of providing access for inspection. RPV weld inspections are typically performed with remotely operated equipment and it is important to provide room for the equipment.

Protection during shipment and on-site storage are important. Exposure to the environment (salt water) resulted in degradation of at least one early RPV.

Design – Reactor Vessel

- Design:
  - ASME Code Section 3, Class 1

U.S.NRC
United States Nuclear Regulatory Commission
Protecting People and the Environment

135

Design in accordance with ASME Class 1 provides a high level of quality.

The design also ensures accessibility to perform Section XI examinations.

10 CFR Appendices G and H

- App G
  - Initial upper shelf energy > 75 ft-lbs.
  - EOL upper shelf energy > 50 ft-lbs.
- App H
  - Surveillance program meets ASTM E-185.

U.S.NRC
United States Nuclear Regulatory Commission
Protecting People and the Environment

136

Limits on initial and end of live upper shelf energy ensure adequate fracture toughness, i.e., non-brittle behavior, at operating temperatures.

Appendix H requires a materials surveillance program. This program requires placing RPV material samples in capsules inside the RPV where they are subject to neutron irradiation from the RX core. The specimens are removed periodically and tested to verify that the change in fracture toughness properties is consistent with those predicted by RG 1.99 that were used in developing the P-T limit curves.

Appendix H references ASTM E-185. The DCD includes:

- A description of the surveillance capsules and specimens.
- Schedule for capsule removal.
- Location , selection and evaluation of neutron dosimetry consistent with RG 1.190.

Pressure-Temperature Limits

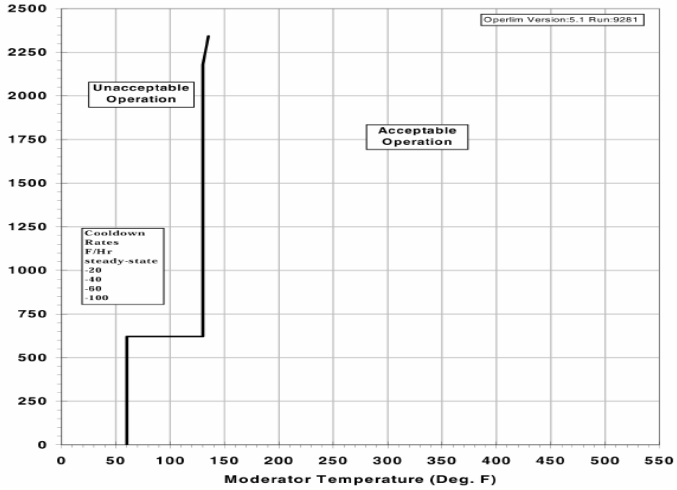

U.S.NRC
United States Nuclear Regulatory Commission
Protecting People and the Environment

137

Remember we saw these P-T curves in Module 16 when we discussed low temperature overpressure protection.

Pressure-Temperature Limits

- PT limits per ASME Code Section III, App G with exceptions:
  - Use of calculated vs. best estimate fluence.
  - Use of KIC vs. KIA (in accordance with Code Case N-641).
  - Use of RG 1.99, Rev. 2.
- Strict limits imposed on P and S.

U.S.NRC
United States Nuclear Regulatory Commission
Protecting People and the Environment

138

Some exceptions were taken in calculating the P-T limits to account for conservatism. The COL applicant is responsible for developing the plant specific P-T curves.

In response to a concern that foreign steels with high phosphorus and sulfur contents may be more sensitive to irradiation embrittlement than predicted by RG 1.99, a commitment was made to maintain ASME Code specifications and impose strict limits on these residual elements.

10 CFR 50.61
Pressurized Thermal Shock

- The staff determined that after 60 years of operation the RTPTS values will be:
  - 30°C (54°F) for the forgings, and
  - 48.8°C (88°F) for the circumferential weld.
- Well below the PTS screening criteria.

U.S.NRC
United States Nuclear Regulatory Commission
Protecting People and the Environment

139

Explain what PTS is and what 10 CFR 50.61 is and that it establishes screening limits of 270 degrees and 300 degrees.

Note improvement of new RPV designs – no axial welds.

Also, note that a proposed revision to 50.61 has been issued that would raise the screening criteria significantly.

Inspections

- Preservice quality assurance inspections in accordance with ASME Section III.
- Methods of inspection in accordance with ASME Section XI.
- Baseline inspections must such that they can be correlated with ISI.

U.S.NRC
United States Nuclear Regulatory Commission
Protecting People and the Environment

140

Fabrication and preservice inspections are consistent with ASME code requirements.

It is important to note that it is important to be able to correlate baseline inspection data with inservice inspection data to assist in dispositioning indications that are found during ISI.

Reactor Vessel Insulation

- RPV insulation is designed to promote in-vessel retention following a severe accident.
- The COL applicant will verify the RPV insulation is consistent with the design basis.

U.S.NRC
United States Nuclear Regulatory Commission
Protecting People and the Environment

141

We are not going to spend a lot of time on this topic. But I wanted to point out that the RPV insulation is designed to support this function and will require verification by the licensee.

Features to allow heat removal via boiling on the outside surface of the RPV.

Description of insulation and provisions to maintain geometry and avoid blockage in order to promote heat transfer.

Flooding of the reactor coolant system loop compartment including the vertical access tunnel, the reactor coolant drain tank room, and the reactor cavity.

SER Evaluation Findings (5.3)

- The NRC found the RPV meets GDC 1, 14, 30 and 32 based on:
  - Designed to ASME Section III, Class 1.
  - Meets App G regarding fracture toughness.
  - Meets App H regarding material surveillance.
  - Meets ASME requirements for inspection.

U.S.NRC
United States Nuclear Regulatory Commission
Protecting People and the Environment

142

The NRC found the reactor pressure vessel design, surveillance and inspection acceptable based on the above.

SER Section

5.4.2 Steam Generators

U.S.NRC
United States Nuclear Regulatory Commission
Protecting People and the Environment

143

These are the SER sections we are going to talk about now.

Learning Objectives (5.4.2)

- Class Participants are expected to understand:
  - Applicable GDC, codes and standards, and RGs.
  - Design features to minimize in service degradation.
  - Steam generator program:
    - Inspection requirements.
    - Tube integrity.

U.S.NRC
United States Nuclear Regulatory Commission
Protecting People and the Environment

144

Review the learning objectives on the slide.

GDC, Regulations, Codes and Standards

- GDC 1: ASME Code provides appropriate quality.
- GDC 14: extremely low probability of RCPB failure.
  - ASME Code Design.
  - SG Inspection and Maintenance Program.
  - SG Water Chemistry Program.
  - Proper cleanliness during fabrication in accordance with RG 1.37.

U.S.NRC
United States Nuclear Regulatory Commission
Protecting People and the Environment

145

Design to the ASME Code provides high quality.

The steam generator tube makes up well over 50 percent of the RCPB.

Design to the ASME Code along with the SG inspection and maintenance program, SG secondary water chemistry program and special attention to cleanliness during fabrication provide assurance of extremely low probability of RCPB failure.

GDC, Regulations, Codes and Standards

- GDC 15: ASME Code and design details provide SG integrity margin.
- GDC 14 and 31: 10 CFR 50 App G and ASME Code III App G assure adequate fracture toughness.
- GDC 32: ASME Code and design details provide access for inspection.

U.S.NRC
United States Nuclear Regulatory Commission
Protecting People and the Environment

146

Design to the ASME Code provides appropriate structural margins to meet design conditions per GDC 15.

Design to 10 CFR 50 App G and ASME Code App G ensures adequate fracture toughness meet GDC 14 and GDC 31 requirements to design against rapidly propagating failure and brittle behavior.

Providing provisions for inspection is very important. Tube inspections are performed using remote equipment and there must be access for examination, cleaning and maintenance of tubes from the secondary side.

Design

- Pressure-retaining parts of the steam generator, primary and, designed to Section III ASME Code, Section 3, Class 1.
- Secondary side components are ASME Class 2.
- SG pressure boundary materials selected and fabricated in accordance with Sections II and III of the ASME Code.
- Fabrication of RCPB discussed in the module on materials.

U.S.NRC
United States Nuclear Regulatory Commission
Protecting People and the Environment

147

The NRC reviewed the steam generator design for consistency with these requirements. Other design features covered in the next slides are required based on operating experience.

Note that the primary pressure boundary, i.e., steam generator tubes, and the secondary pressure boundary, i.e., steam generator shell, are both designed as ASME Class 1.

Selection and processing of steam generator materials (other than the tubing) is discussed in a different module.

Design

- Fracture toughness of ferritic materials complies with 10 CFR 50, Appendix G, fracture toughness and Paragraph NB-2300 of Section III of the ASME Code.
- Inspection ports.
- All volatile water chemistry.

U.S.NRC
United States Nuclear Regulatory Commission
Protecting People and the Environment

148

Four 15.2–cm (6-inch) access ports are available for sludge lancing and inspection and retrieval of loose parts and two 10.2-cm (4-inch) ports providing access to the U-bend area of the tube bundle.

Primary and secondary water chemistry guidelines reduce the possibility of SCC, denting, pitting, and wastage of SG tubes through chemistry controls.

Design Features

- Corrosion allowances consistent with material erosion/corrosion resistance and service environment.
  - SG designed to minimize potential for mechanical or flow-induced vibration.
  - Thermally treated Alloy 690 tubes.
  - Tube full depth expanded in tubesheet.
  - Type 405 stainless steel support plates with three-lobed, or trefoil broached holes.
  - Type 405 stainless steel anti-vibration bars.

U.S.NRC
United States Nuclear Regulatory Commission
Protecting People and the Environment

149

A great deal of operating experience has been factored into the design of the steam generators in order to minimize service induced degradation.

Testing and analyses were performed to demonstrate that flow induced vibration should not be a concern.

Thermally treated Alloy 690 tubing has demonstrated improved resistance to various forms of corrosion.

Full depth expansion of the tubes in the tubesheet reduces the potential for concentration of deposits in the tube to tubesheet crevice and reducing the potential for intergranular attack and other forms of degradation in that area.

Similarly, stainless steel support plates with the trefoil design minimizes corrosion buildup in the spaces between the tubes and tube support plates which can lead to corrosion such as intergranular attack.

Anti-vibration bar materials and design minimize the potential for wear at the tube to vibration bar contact points.

Design Features

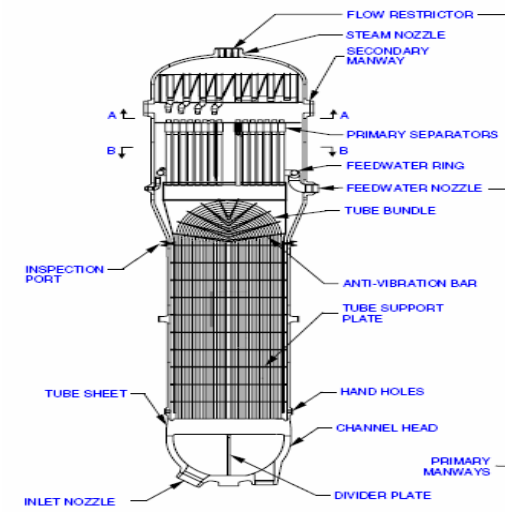

U.S.NRC
United States Nuclear Regulatory Commission
Protecting People and the Environment

150

Use the figure to point out design features important to maintaining tube integrity, e.g.,

- Tube sheet crevice,
- Support Plate intersections,
- Anti-vibration bars,
- “Hand Holes,”
- Inspection ports,
- Shape of channel head to allow inspection equipment at the periphery of the bundle.

Design Features

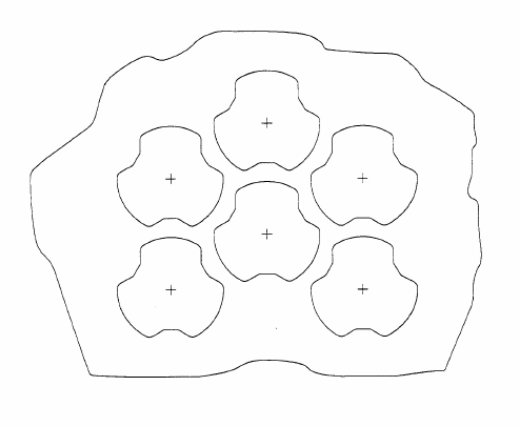

U.S.NRC
United States Nuclear Regulatory Commission
Protecting People and the Environment

151

Note how the design minimizes buildup of corrosion products.

Steam Generator Inspections

- Preservice and inservice inspections satisfy 10 CFR 50.55A, ASME Code and RG 1.83.
- SG design provides access for tube inspection, repair, or plugging.
- SG tube integrity is verified in accordance with a steam generator tube surveillance program implemented by the COL applicant.

U.S.NRC
United States Nuclear Regulatory Commission
Protecting People and the Environment

152

Summarize bullets on the slide.

The SG program incorporates the steam generator program requirements in the latest revisions of the Standard Technical Specifications, NUREG-1430, NUREG-1431, and NUREG-1432, into the facility's Technical Specifications (the steam generator program in the Standard Technical Specifications meets the requirements of 10 CFR 50.36).

This is a performance based program in which results from successive inspections are used to verify that the SG tubes are maintaining appropriate margins against failure during operation. A variety of plugging or repair criteria can be applied consistent with the program guidelines.

The COL applicant must develop and provide the steam generator tube surveillance program.

SER Evaluation Findings (5.4.2)

- NRC found the steam generators meet the requirements of GDC 1, 14, 15, 31 and 32 based on:
  - Designed to ASME Code.
  - Operating experience factored into design.
  - Performance based tube surveillance program by COL applicant.

U.S.NRC
United States Nuclear Regulatory Commission
Protecting People and the Environment

153

The ASME Code is relied on heavily to produce a design that satisfies the GDC.

Operating experience is also factored into the design to minimize tube degradation in service.

A performance based tube surveillance program must be developed and implemented by the COL applicant.

AP1000 Engineering Topics

Module 19
SER Sections 5.4.1, 5.4.3 - 5.4.14, 4.5, 5.2.3, 6.1

INSTRUCTOR: Jack Strosnider
October 2008

U.S.NRC
United States Nuclear Regulatory Commission
Protecting People and the Environment

154

SER Section

5.4.1 Reactor Coolant Pump Assembly

U.S.NRC
United States Nuclear Regulatory Commission
Protecting People and the Environment

155

These are the SER sections we are going to talk about now.

Learning Objectives (5.4.1)

- Class Participants are expected to understand:
  - The basis for satisfying:
    - GDC 1 regarding quality.
    - GDC 2 regarding protection against dynamic effects.

U.S.NRC
United States Nuclear Regulatory Commission
Protecting People and the Environment

156

GDC, Regulations and Codes and Standards

- GDC 1 regarding quality is satisfied by:
  - Meeting 10 CFR 50.55a, ASME Code Section III
- GDC 4 regarding protection against dynamic effects is satisfied by:
  - An analysis (WCAP-15994-P) showing a failed flywheel will not penetrate the reactor coolant pump pressure boundary.

U.S.NRC
United States Nuclear Regulatory Commission
Protecting People and the Environment

157

GDC 1 is met by designing in accordance with ASME Code Section III, NB-3400.

GDC 4 and concerns regarding flywheel failure and missile generation are addressed by an analysis showing that such a missile would not have sufficient kinetic energy to penetrate the reactor coolant pump housing. This analysis is presented in WCAP-15994-P, Revision 0, “Structural Analysis for the AP1000 Reactor Coolant Pump High Inertia Flywheel” which was found acceptable by the NRC.

Reactor Coolant Pump Design

- Single stage, hermetically sealed, high inertia, centrifugal canned motor pump.
- Connected directly to SG outlet nozzles.
- Provide adequate flow rate to maintain DNBR consistent with safety analysis.
- Provides coastdown on loss of power.

U.S.NRC
United States Nuclear Regulatory Commission
Protecting People and the Environment

158

The key features of the reactor coolant pump design are presented on this and on the next slide.

Summarize the key design features on the slide.

Reactor Coolant Pump Design

- Pressure boundary designed to withstand a flywheel failure.
- Seal failure does not need to be considered as the pump has no seals.
- Designed to Section III of ASME Code.
- Preservice and inservice inspections per RG 1.14.

U.S.NRC
United States Nuclear Regulatory Commission
Protecting People and the Environment

159

Summarize the key design features on the slide.

Pump Flywheel

- Basis for approval - flywheel fails but does not penetrate the pump casing.
  - Flywheel ISI program is not required.
  - Lack of fracture toughness data acceptable.
  - Analyses required to demonstrate acceptable stress levels.
- 125 percent overspeed test required as an ITAAC.

U.S.NRC
United States Nuclear Regulatory Commission
Protecting People and the Environment

160

As stated earlier, the basis for approving the reactor coolant pump flywheel design is that if it fails, it will not penetrate the reactor coolant pump casing.

Without fracture toughness data, an analysis to demonstrate that flywheel failure could be prevented via design and inspection was not possible.

Nonetheless, an analysis demonstrating acceptable stress levels in the flywheel and a 125 percent overspeed test were required.

SER Evaluation Findings (5.4.1)

- The staff found the reactor coolant pump design acceptable based on:
  - GDC 1 is met by designing to ASME Code Section III.
  - GDC 4 is met based on flywheel failure not penetrating pump casing.

U.S.NRC
United States Nuclear Regulatory Commission
Protecting People and the Environment

161

Read the points on the slide.

SER Sections

5.4.3 RCS Piping
5.4.4 Main Steamline Flow Restriction
5.4.5 Pressurizer
5.4.6 Automatic Depressurization System Valves
5.4.7 Normal Heat Removal System
5.4.8 Valves
5.4.9 RCS Pressure Relief Devices
5.4.10 RCS Component Supports
5.4.11 Pressurizer Relief Discharge
5.4.12 RCS High-point Vents
5.4.13 Core Makeup Tank
5.4.14 Passive Residual Heat Removal Heat Exchanger

U.S.NRC
United States Nuclear Regulatory Commission
Protecting People and the Environment

162

This section covers a lot of different components and systems. However, the engineering design requirements are similar so they are all covered in this section.

Learning Objectives (5.4.3 - 5.14)

- Class Participants should understand quality standards for:

• RCS Piping • Main Steam Line Flow Restrictor • Pressurizer and Pressurizer Discharge • ADS Valves and Pressure Relief Devices • RCS and Safety Related Valves	• Normal Residual Heat Removal System • RCS High Point Vents • Core Make-up Tank • Passive Residual Heat Removal Heat Exchanger

U.S.NRC
United States Nuclear Regulatory Commission
Protecting People and the Environment

163

In this session we will focus on the quality standards for these subsystems and components.

Applicable GDC and Regulations

- GDC 1 requires that SSCS be designed, fabricated and erected to quality standards commensurate with their safety functions.

U.S.NRC
United States Nuclear Regulatory Commission
Protecting People and the Environment

164

In this discussion there will be a brief description of each of the subsystems and components. We will focus primarily on the Classifications for these subsystems and components. These Classifications determine the seismic design category and ASME Code Class. They also determine whether or not 10 CFR 50 App B is applicable.

Reactor Coolant System Piping

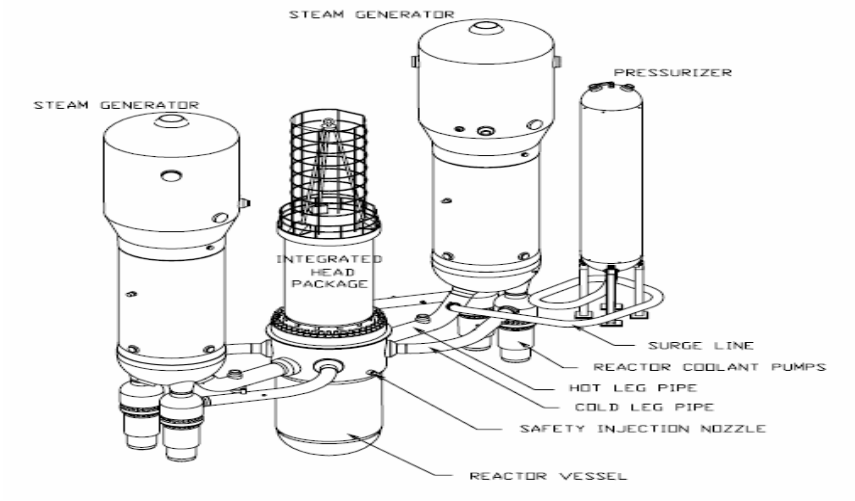

U.S.NRC
United States Nuclear Regulatory Commission
Protecting People and the Environment

165

The reactor coolant system piping includes those sections of reactor coolant hot leg and cold leg piping interconnecting the reactor vessel, steam generators, and reactor coolant pumps. It also includes piping connected to the reactor coolant loop piping and primary components.

The boundary of the reactor coolant system includes the second of two isolation or shut off valves and the piping between those valves. A single ASME Code safety valve may also represent the boundary of the reactor coolant system.

RCS Piping

- Quality Group A, ASME Code, Section II (Parts A and C), Section III, and Section IX, Class 1 requirements.
- Lines with 3/8-inch or less flow restricting orifice Quality Group B, ASME Code, Section III, Class 2 requirements.

U.S.NRC
United States Nuclear Regulatory Commission
Protecting People and the Environment

166

10 CFR 50 App B is applicable to both Quality Groups A and B.

CVCS can accommodate a break in one of a line with 3/8 inch flow restriction.

RCS Piping

- Forged, seamless austenitic stainless steel.
- No longitudinal welds or cast fittings.
- Bent pipe minimizes number of welds.
- Less than 6 inch (15.24 mm) qualified for LBB.
- Provisions to avoid pressurizer surge line fatigue.

U.S.NRC
United States Nuclear Regulatory Commission
Protecting People and the Environment

167

Some important features of the RCS piping include:

Uses bent pipe instead of elbows to minimize the number of welds, fittings, and short radius turns (The minimum pipe bend radius is 1.5-nominal pipe diameters, and ovality meets the requirements of the ASME Code).

Provisions to avoid fatigue in the pressurizer surge line include:

- Slopes to minimize the potential for thermal stratification,
- Surge line temperature monitoring for indication of thermal stratification, and
- Temperatures in the spray lines from the cold legs of one loop are measured and indicated to warn the operator of low spray water temperature or to indicate insufficient flow in the spray lines.

There are numerous inspection and testing ITAACs related to verifying the as-built configuration and integrity of the RCS piping.

Main Steam Line Flow Restrictor

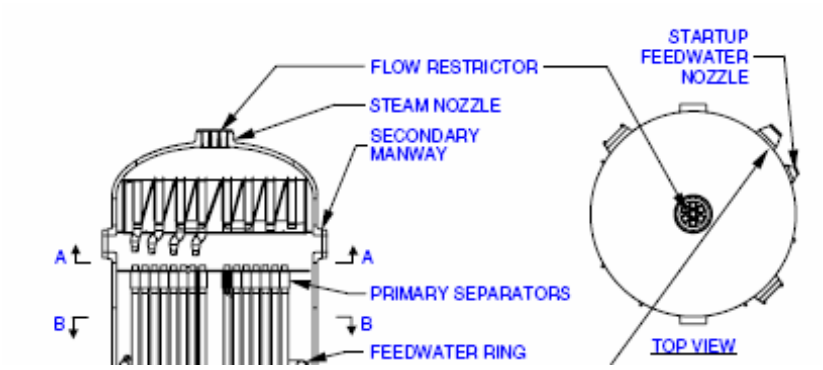

U.S.NRC
United States Nuclear Regulatory Commission
Protecting People and the Environment

168

A flow restrictor in the mainsteam line performs the following functions in the event of a postulated break:

Limits rapid rise in containment pressure,

Limits the rate of heat removal from the reactor to keep the cooldown rate within acceptable limits,

Reduces thrust forces on the main steam line piping, and

Limits pressure differentials on internal steam generator components, particularly the tube support plates.

Materials of construction of the flow restrictor are in accordance with Code Class 1 Section III of the ASME Code.

The material of the inserts is not an ASME Code pressure boundary, nor is it welded to an ASME Code pressure boundary.

The method for seismic analysis is dynamic.

Pressurizer

- Cylindrical SS clad, low alloy steel vessel connected to the hot leg.
- Controls RCS pressure and volume.
- Safety relief valves and ADS valves are connected (no PORVs).
- Designed and fabricated to ASME code.
- Pressurizer Size Changed in DCD Rev 16.

U.S.NRC
United States Nuclear Regulatory Commission
Protecting People and the Environment

169

The pressure boundary of the pressurizer is AP1000 Class A, ASME Class 1. Other parts of the pressurizer vary in ASME Classification depending upon their function – see DCD 3.2 for the breakdown.

Note that the AP1000 pressurizer volume is large enough that power-operated relief valves are not needed.

In Rev 16 of the DCD the Pressurizer was made shorter and fatter in order to accommodate the seismic design for other than a hard rock site.

Pressurizer Discharge

- AP1000 does not have a pressurizer relief discharge system.
- Relief valves discharge through a rupture disc to containment atmosphere.
- 1ST, 2ND and 3RD stage ADS valves discharge to in-containment refueling water storage tank.
- ASME Section III design, seismic Class 1, inspected and tested per ASME Section XI.

U.S.NRC
United States Nuclear Regulatory Commission
Protecting People and the Environment

170

The AP1000 does not have a pressurizer relief discharge system, but some components are used to provide a similar function.

The pressurizer relief (safety) valve and ADS valves are AP1000 Class A. They are seismically designed, meet ASME Code Class 1 and 10 CFR 50 App B requirements.

ADS Valves and Pressure Relief Devices

- Safety valves connected to the PZR provide RCS overpressure protection.
- ADS valves:
  - 20 valves are part of the RCS and interface with PXS.
  - 1st, 2ND, and 3RD stage relief valves mounted on the PZR.
  - 4TH stage relief valves mounted to the RCS hot leg.
- RNS valve:
  - Designed for water relief.
  - Set pressure below RCS design, i.e., not a pressure relief valve.
  - Not subject to EPRI qualification program.

U.S.NRC
United States Nuclear Regulatory Commission
Protecting People and the Environment

171

As noted, the ADS valves are AP1000 Class a, designed as seismic Category I, ASME Class 1.

The staff found the ADS design acceptable based on the Chapter 15 safety analyses of various design-basis accidents such as the small-break LOCAs described in DCD Tier 2, Section 15.6.5, which demonstrate that the ADS design and the passive core cooling system meet the acceptance criteria specified in 10 CFR 50.46. (See Training Module #9.)

The staff found the RNS relief valve acceptable because:

It is classified as an AP1000 Class 2 component, and will be designed, manufactured, and tested to ASME Section III, Class 2 requirements.

The RNS relief valve is included in the IST program.

Position indication for the RNS relief valve is provided in accordance with 10 CFR 50.34(f)(2)(xi).

The RNS relief valve is not subject to the EPRI test program because it is designed for water relief and is not an RCS pressure relief device because it has a set pressure less than the RCS design pressure.

RCS and Safety-Related Valves

- RCS pressure boundary valves meet ASME Code Class 1, Section III, Article NB-3000 requirements.
- Valves of 1 inch and smaller in lines connected to the RCS meet Class 2, Section III, Article NC-3000 requirements when the flow is limited by a flow-limiting orifice.
- Containment isolation valves meet ASME Code, Class 2, Section III, Article NC-3000 requirements.
- Other AP1000 equipment Class C safety-related valves meet ASME Code, Class 3 requirements.

U.S.NRC
United States Nuclear Regulatory Commission
Protecting People and the Environment

172

This slide and the next slide summarize the ASME Code Class that RCS and safety-related valves are designed to. The assigned classifications are based on the functions they perform.

Summarize the points on the slide.

RCS and Safety-Related Valves

- Safety-related valves in auxiliary systems manufactured to ASME Code Class 2 and 3.
- ASME Code Class 3 valves designed to ASME Code, Section III, Article ND-3000.
- Functional requirements are consistent with the guidelines in Regulatory Guide 1.148 and ANSI N278.1-1975.

U.S.NRC
United States Nuclear Regulatory Commission
Protecting People and the Environment

173

Summarize the points on the slide.

Normal Residual Heat Removal System

- RCPB portion of NRS is Class A.
- RNS containment isolation valves Class B.
- Remaining portions of the system Class C.
- Pressure boundary is seismic Cat I.
- High energy portions of RNS qualified for LBB.
- Designed to preclude inter-system LOCA per SECY 90-016.

U.S.NRC
United States Nuclear Regulatory Commission
Protecting People and the Environment

174

Summarize the points on the slide.

Note that 10 CFR 50 App B applies to Safety Classes A through C.

RCS High Point Vents

- The vent system design meets 10 CFR 50.34(F)(2)(VI).
- First stage ADS valves designed, constructed and inspected to ASME Code Class I and seismic CAT I.
- PXS heat Hx piping and core makeup tank inlet piping include high vent points designed to ASME Code Section III.
- Vessel head vent system:
  - Safety related, single failure proof.
  - Environmentally qualified.
  - ASME Code Section III, Class 1 up to and including the second isolation valve and Class 3 beyond.

U.S.NRC
United States Nuclear Regulatory Commission
Protecting People and the Environment

175

The PRHR Hx and core make up tank are AP1000 Class A, designed to ASME Class 1.

The staff concluded that the PRHR HX and CMT highpoint vents are acceptable because:

They provide a means to prevent accumulation of noncondensable gases from the RCS that could interfere with PXS operation, and

They are designed in accordance with the ASME Code Section III.

Core Makeup Tanks

- Two tanks are part of the PXS.
- Store cold, borated water under system pressure for high-pressure reactor coolant makeup.
- Vertically mounted, cylindrical pressure vessel fabricated from low alloy steel with 308l stainless steel cladding.
- Designed to ASME, Section III, Class 1.

U.S.NRC
United States Nuclear Regulatory Commission
Protecting People and the Environment

176

The CMT is a part of the RCPB and AP1000 Class A equipment, and is designed and fabricated according to ASME Code, Section III, Class 1 component requirements.

Interesting to note that, in support of the AP600 design certification application, the applicant performed various separate effects and integral system tests to study thermal-hydraulic behavior and validate models for the AP600 PXS and components. (See previous module.)

Passive Residual Heat Removal Heat Exchanger

- C-shaped tube Hx located inside the in-containment refueling water storage tank.
- Removes core decay heat for non-LOCA accidents where loss of steam generator cooling occurs.
- ASME Code Section III, Class 1 component.
- Designed to allow ISI per ASME Code Section XI using methods similar to steam generator inspections.

U.S.NRC
United States Nuclear Regulatory Commission
Protecting People and the Environment

177

The PRHR HX is part of the RCPB, is designated AP1000 Class A equipment, and is designed and fabricated according to the ASME Code, Section III, as a Class 1 component.

SER Evaluation Findings (5.4.3 - 5.4.14)

- NRC found design of subsystems and components acceptable based on:
  - Conformance with design codes (ASME) providing quality commensurate with their safety functions.

U.S.NRC
United States Nuclear Regulatory Commission
Protecting People and the Environment

178

Read the slide.

SER Sections

4.5 Reactor Materials

5.2.3 RCPB Materials

6.1 Engineered Safety Feature Materials

U.S.NRC
United States Nuclear Regulatory Commission
Protecting People and the Environment

179

Learning Objectives (4.5, 5.2.3, and 6.1)

- Class Participants are expected to understand:
  - Relevant GDC.
  - Applicable codes and regulatory guidance to assure proper material selection and fabrication.

U.S.NRC
United States Nuclear Regulatory Commission
Protecting People and the Environment

180

RCPB Materials

- RCPB material selection:
  - ASME Code Section III, App I.
  - ASME Code Section II, Materials, Parts A, B, and C.
  - Application of materials code cases in accordance with RG 1.84.
- Assures high quality of the RCPB in accordance with GDCs 1 and 30.

U.S.NRC
United States Nuclear Regulatory Commission
Protecting People and the Environment

181

The NRC reviewed the AP1000 application for consistency with these codes and standards.

RCPB Materials

- Compatibility of RCPB material with reactor coolant:
  - ASME Code requirements for corrosion (Section III, NB 3121).
  - RG 1.44 regarding use of sensitized stainless steel cladding requirements for low alloy and carbon steels.
- Assures RCPB material can withstand environmental effects in accordance with GDC 4.

U.S.NRC
United States Nuclear Regulatory Commission
Protecting People and the Environment

182

The ASME code requirements, controls to avoid sensitization of stainless steels and cladding of low alloy stainless steels are all measures to reduce the potential for various forms of corrosion, e.g., general corrosion or stress corrosion cracking.

RCPB Materials

- Control of fabrication and processing for ferritic steels:
  - ASME Code Section III, Article NB-2300.
  - App G of 10 CFR 50.
- Ensure extremely low probability of leakage or fracture of the RCPB in accordance with GDCS 14 and 31.

U.S.NRC
United States Nuclear Regulatory Commission
Protecting People and the Environment

183

Controls over fabrication of ferritic materials are provided on the next slide.

RCPB Materials

- Control of welding for ferritic steels:
  - 1.31, "Control of Ferrite Content in Stainless Steel Welds."
  - 1.50, "Control Of Preheat For Welding of Low Alloy Steel."
  - RG 1.34, "Control of Electroslag Weld Properties."
  - RG 1.71, "Welder Qualification for Areas of Limited Access."
  - RG 1.43, "Control of Stainless Steel Weld Cladding of Low Alloy Steel Components."
- Assures high quality of the RCPB in accordance with GDCs 1 and 30.

U.S.NRC
United States Nuclear Regulatory Commission
Protecting People and the Environment

184

Control of delta ferrite content in austenitic stainless steels is important because low delta ferrite content in deposited weld metal can result in microfissuring. The RG provides recommended ferrite content for weld metal (a Ferrite Number between 5 and 10) and methods for verifying the ferrite number.

RG 1.50 provides guidance for preheat temperatures for welding of low alloy steels in order to avoid (cold cracking or reheat) cracks near the welds (in underbead or heat affected zones).

RG 1.34 provides guidance on welding parameters to achieve the desired grain structure in electroslag welds to enhance their quality. (it is desirable to maintain a dendritic pattern with strong intergranular bonding in the center of the weld.)

RCPB Materials

- Control of fabrication and processing for austenitic steels:
  - RG 1.44 to avoid sensitization upper yield strength limit of 620 MPa.
  - RG 1.44 regarding cleaning and protection against contaminants.
  - RG 1.37 regarding QA requirements and control of abrasive. work
  - RG 1.36 regarding insulation.
- Assures environmental compatibility in accordance with GDC 4 and low likelihood of failure in accordance with GDCs 14 and 31.

U.S.NRC
United States Nuclear Regulatory Commission
Protecting People and the Environment

185

RG 1.44 provides guidance on materials, e.g., carbon content, and fabrication methods, e.g., solution annealing, to avoid sensitization and stress corrosion cracking in stainless steels.

Lower yield strength stainless steels also have lower potential for stress corrosion cracking.

Abrasive work can increase residual stresses and insulation can introduce contaminants that increase the potential for stress corrosion cracking.

RCPB Materials

- Control of welding for austenitic steels:
  - RG 1.31, “Control of Ferrite Content in Stainless Steel Weld Metal.”
  - RG 1.34, “Electroslag Weld Properties.”
  - RG 1.71, “Welder Qualification for Areas of Limited Access.”
- Assures high quality of the RCPB materials in accordance with GDCs 1 and 30.

U.S.NRC
United States Nuclear Regulatory Commission
Protecting People and the Environment

186

We already talked about RG 1.31 regarding avoiding low delta ferrite that can lead to cracking in weld metal and RG 1.34 which provides guidance to optimize electroslag weld properties.

Control Rod Drive Material

- GDC 1, 14, 26 are applicable corrosion resistant materials.
- Pressure retaining material meet ASME Code Section III, Class 1.
- Meets RG 1.44.
- Less than 90 KSI yield strength.

U.S.NRC
United States Nuclear Regulatory Commission
Protecting People and the Environment

187

Applicable GDCs are:

- GDC 1 regarding quality standards.
- GDC 14 regarding RCPB margins.
- GDC 26 regarding Reactivity Control System Redundancy and Capability.

The parts of the control rod drive mechanisms and control rod drive line exposed to reactor coolant are made of metals that resist the corrosive action of the coolant: austenitic and martensitic stainless steels, nickel-chromium-iron alloys, and, to a limited extent, cobalt-based alloys.

Control Rod Drive Material

- Control rod drive materials meet:
  - RG 1.31, Control Of Ferrite In Stainless Steel Weld Metal.
  - RG 1.34, Control Of Electroslag Weld Properties.
  - RG 1.44, Control Of Sensitized Stainless Steel.

U.S.NRC
United States Nuclear Regulatory Commission
Protecting People and the Environment

188

Again, we already talked about these RGs.

Control Rod Drive Material

- Low or zero cobalt alloys qualified by wear and corrosion tests.
- Control over cleaning and abrasive work.

U.S.NRC
United States Nuclear Regulatory Commission
Protecting People and the Environment

189

Cobalt bearing alloys are not desirable in the RCS because cobalt in the reactor coolant can become activated and add to radiation exposure sources. Low or zero cobalt alloys are demonstrated by industry program to perform their function.

Cleaning solutions and materials can leave chemicals that breakdown the stainless steel corrosion barrier.

Abrasive work can create residual stresses which contribute to stress corrosion cracking.

Reactor Internals and Core Support

- Type 304LN stainless steel.
- Minimal use of cast stainless steel.
- Material selection, welding controls in accordance with ASME Code Section III, NG-4000.
- Irradiation assisted stress corrosion cracking, void swelling not expected.

U.S.NRC
United States Nuclear Regulatory Commission
Protecting People and the Environment

190

Nuclear grade low carbon stainless steel is used to minimize the potential for sensitization and stress corrosion cracking.

Use of cast stainless steel is minimized because it can lose toughness due to thermal aging.

The estimated peak neutron fluence for the AP1000 reactor vessel internals of 9E21 n/cm2 is acceptable relative to known issues of irradiation-assisted stress corrosion cracking or void swelling in reactor internals.

Reactor Internals and Core Support

- Material fabrication meets:
  - RG 1.31, Control Of Ferrite In Stainless Steel Weld Metal.
  - RG 1.44, Control Of Sensitized Stainless Steel.
  - RG 1.71, Welder Qualification For Areas Of Limited Access.

U.S.NRC
United States Nuclear Regulatory Commission
Protecting People and the Environment

191

And again we see RGs 1.31 and 1.44.

Welder qualifications in limited access areas can be important for welding of internal components; although, the idea would be to weld components before final assembly and design the internals to facilitate welding in place to the extent possible.

Steam Generator Materials

- GDCs 1 and 30 are satisfied by use of ASME Code Section III Articles NCA-1000, NB-2000 and NC-2000 and approved code cases in accordance with RG 1.84.
- Fabrication controls are consistent with that for RCPB materials.
- Fracture toughness is in accordance with 10 CFR App G and ASME Code, Section III, NB-2300.

U.S.NRC
United States Nuclear Regulatory Commission
Protecting People and the Environment

192

SG pressure boundary materials are selected and fabricated in accordance with Sections II and III of the ASME Code. Table 5.2-1 lists the types of materials.

Fabrication of reactor coolant pressure boundary materials discussed in subsection 5.2.3

Adequate fracture toughness of ferritic is provided by compliance with 10 CFR 50, Appendix G, Fracture Toughness Requirements, and Paragraph NB-2300 of Section III of the ASME Code.

As we discussed in the section on Steam Generators, the tubes are thermally treated Alloy 690.

Engineered Safety Features (ESF) Materials

- Applicable GDC: 1, 4, 14, and 31.
- Primarily stainless steel or other corrosion resistant materials.
- Materials meet ASME Section III and Section II.
- Use of cobalt based alloys minimized.

U.S.NRC
United States Nuclear Regulatory Commission
Protecting People and the Environment

193

Fabrication and processing of ferritic materials:

Applicable GDC are:
- GDC 1 Regarding quality standards;
- GDC 14, 15 and 31 regarding extremely low probability of leakage, rapid failure and gross rupture; not exceeding design conditions; and sufficient margin to prevent failure.

Materials of ESF components comply with:
- Subarticles NB-, NC-, and ND-3120 which require consideration of the effects of corrosion, erosion,
- Subarticles NB-, NC-, and ND-3121 which consider abrasive wear, and
- Subarticles NB-, NC-, and ND-3124) which consider environmental effects, specifically, irradiation-induced changes.

Section 5.2.3 is referenced for evaluation of the fabrication and processing of austenitic stainless steels and compliance with:
- RG 1.31, “Control of Ferrite Content in Stainless Steel Weld Metal”;
- RG 1.34, “Control of Electroslag Weld Properties”;
- RG 1.44, “Control of the Use of Sensitized Stainless Steel”; and
- RG 1.50, “Control of Preheat Temperature for Welding of Low- Alloy Steel.”

Section 5.2.3.4 is referenced for evaluation of controls on cold work in austenitic stainless steels and methods to control delta ferrite content in austenitic stainless steel weldments. The methods to control delta ferrite content in austenitic stainless steel weldments in ESF components are the same as those for the ASME Code Class 1 components

The fracture toughness of the ferritic materials will meet the requirements of the ASME Code.

Cold-worked stainless steels meet the staff position that the yield strength of cold-worked stainless steels shall be less than 620.5 MPa (90,000 psi).

GDC 14, 15, AND 31 fracture toughness requirements are met by compliance with:
- Appendix G to 10 CFR Part 50
- 10 CFR 50.55a(c), (d) and (e), and
- Appendix G to Section III of the ASME Code.

GDC 1 and 30 requirements relative to welding are met by compliance with:
- 10 CFR Part 50, 10 CFR 50.55a(c), 10 CFR 50.55a(d), and 10 CFR 0.55a(e), and RGs 1.50, 1.34, 1.71, and 1.43.

Engineered Safety Features (ESF) Materials

- Primarily metallic reflective insulation.
- Fibrous insulation is enclosed in stainless steel cans.
- Fibrous insulation is controlled in accordance with RG 1.36.

U.S.NRC
United States Nuclear Regulatory Commission
Protecting People and the Environment

194

Fabrication and processing of austenitic stainless steel:

Control of fibrous insulation is important to ensuring proper containment sump performance. **Discuss significance given passive design.**

Selection, procurement, testing, storage, and installation of nonmetallic thermal insulation provides confidence that the leachable concentrations of chloride, fluoride, and silicate are in conformance with Regulatory Guide 1.36.

Engineered Safety Features (ESF) Materials

- Coatings.
- Service levels in accordance with RG 1.54, Service Level I, II, and III protective coatings.
- Conform to RG 1.28, quality assurance program requirements, and ASME NQA-1-1983.

U.S.NRC
United States Nuclear Regulatory Commission
Protecting People and the Environment

195

Service Level I coatings are used in areas inside the reactor containment where the coating failure could adversely affect the operation of post accident fluid systems and thereby impair safety.

Service Level II coatings are used in areas where coatings failure could impair, but not prevent, normal operating performance. The functions of Service Level II coatings are to provide corrosion protection and decontaminability in those areas outside the reactor containment that are subject to radiation exposure and radionuclide contamination. Service Level II coatings are not safety-related.

Service Level III coatings are used in areas outside the reactor containment where failure could adversely affect the safety function of a safety-related SSC.

Special Topic:
CRDM Penetration Cracking

U.S.NRC
United States Nuclear Regulatory Commission
Protecting People and the Environment

196

This is a picture of the NRC Director of the Office of Research showing a model of the Davis Besse Reactor Vessel Head corrosion that occurred as the result of cracking in a CRDM penetration nozzle that led to boric acid corrosion of the low alloy reactor vessel head.

This model will be on display at the NRC as a reminder to all the staff of the very real risk that can be posed by stress corrosion cracking and boric acid corrosion without effective design, inspection and corrective actions.

The boric acid corrosion “ate” away the metal from the outside of the RPV head to the inside; where only the stainless steel cladding remained in one area.

Recent NRC generic communications, including NRC Bulletins 2001-01 and 2002-02, have addressed issues related to the cracking of VHP nozzles. In addition, on February 11, 2003, the NRC issued an order, EA-03-009, “Interim Inspection Requirements for Reactor Pressure Vessel Heads at PWRs,” establishing interim inspection requirements for the reactor vessel heads of PWRs.

The staff found that the AP1000 design and preservice inspections of the CRDM penetrations was acceptable, but the COL applicant will have to address the inservice inspection requirements consistent with NRC requirements.

Davis Besse RPV Head Corrosion

U.S.NRC
United States Nuclear Regulatory Commission
Protecting People and the Environment

197

A photo of the actual corrosion area in the Davis Besse reactor vessel head.

SER Evaluation Findings

NRC found the AP1000 selection and fabrication of materials acceptable based on conformance with applicable regulatory guidance including referenced Codes and Standards.

U.S.NRC
United States Nuclear Regulatory Commission
Protecting People and the Environment

198

The same principles and standards apply across most applications of materials.

AP1000 Quality Assurance

Module 20
SER Section 17

INSTRUCTOR: Jack Strosnider
October 2008

U.S.NRC
United States Nuclear Regulatory Commission
Protecting People and the Environment

199

Learning Objectives

- Class Participants are expected to understand:
  - Applicable GDC and regulations.
  - 10 CFR 50 app B criteria.
  - Application of QA requirements.
  - QA for regulatory treatment of non-safety systems.
  - The reliability assurance program.
  - COL action items.

U.S.NRC
United States Nuclear Regulatory Commission
Protecting People and the Environment

200

Read the points on the slide.

Applicable GDC and Regulations

- GDC 1 – SSCs should be designed, fabricated and erected to quality standards commensurate with their safety function.
- 10 CFR 50 app B specifies criteria that must be met by an acceptable QA program.

U.S.NRC
United States Nuclear Regulatory Commission
Protecting People and the Environment

201

Summarize the bullets on the slide.

10 CFR APP B

I. Organization
II. Quality assurance program
III. Design control
IV. Procurement document control
V. Instructions, procedures, and drawings
VI. Document control
VII. Control of purchased material, equipment, and services
VIII. Identification and control of material, parts and components
IX. Control of special processes
X. Inspection
XI. Test control
XII. Control of measuring and test equipment
XIII. Handling, storage and shipping
XIV. Inspection, test, and operating status
XV. Nonconforming materials, parts, or components
XVI. Corrective action
XVII. Quality assurance records
XVIII. Audits

U.S.NRC
United States Nuclear Regulatory Commission
Protecting People and the Environment

202

Appendix B includes the 18 criteria shown on this slide that must be met by an acceptable Quality Assurance program.

DCD QA Areas

- Design, procurement, fabrication, inspection/testing.
- QA for regulatory treatment of non-safety systems (RTNSS).
- Design reliability assurance program (D-RAP).

U.S.NRC
United States Nuclear Regulatory Commission
Protecting People and the Environment

203

None.

Design, Procurement, and Fabrication QA

- Information submitted per 50.34(A)(7) shall be limited to the QA program to be applied to the design, procurement and fabrication of the SSCs.
- The QA must satisfy the criteria of 10 CFR Part 50, Appendix B.

U.S.NRC
United States Nuclear Regulatory Commission
Protecting People and the Environment

204

In addition, 10 CFR Part 52, Appendix O, “Standardization of Design: Staff Review of Standard Designs,” [Appendix O has been relocated to Subpart E in the revision to Part 52.] states that the information submitted pursuant to Subsection 50.34(a)(7) shall be limited to the QA program to be applied to the design, procurement and fabrication of the SSCs **for which the design review has been requested.**

The staff reviewed the QA program used during the Design, Procurement and Fabrication to verify that it satisfied 10 CFR Part 50, Appendix B.

The staff concluded that the Westinghouse QA program met App B.

QA for RTNSS

- Approach per SECY-95-132, "Policy and Technical Issues Associated with the Regulatory Treatment of Non-Safety Systems in Passive Plant Designs."
- QA controls applied to:
  - ATWS.
  - Station blackout.

U.S.NRC
United States Nuclear Regulatory Commission
Protecting People and the Environment

205

Quality Assurance Controls for Structures, Systems, and Components Identified by the Regulatory Treatment of Non-Safety Systems Process refers to special regulatory controls, including QA, placed on SSCs that are not safety related, but provide defense in depth and are deemed significant from a risk perspective.

SECY-95-132, "Policy and Technical Issues Associated with the Regulatory Treatment of Non-Safety Systems in Passive Plant Designs (SECY-94-084)," dated May 22, 1995, provides the staff position on this topic.

The NRC staff reviewed the QA controls applicable to the SSCs within the RTNSS process to verify that adequate controls were specified to ensure the reliability and availability of risk-significant, non-safety-related SSCs. The staff utilized the guidance in SECY-95-132.

As described in SECY-95-132, the staff considered graded requirements for QA and quality control consistent with the
importance to safety of the systems identified by the RTNSS process.

The QA controls proposed by the applicant were generally consistent with the QA measures specified for non-safety-related SSCs in Generic Letter (GL) 85-06, "Quality Assurance Guidance for ATWS Equipment That Is Not Safety Related," and Regulatory Guide (RG) 1.155, "Station Blackout."

The staff found this acceptable.

Reliability Assurance Program (RAP)

- In accordance with SECY-95-132, the RAP assures:
  - The reactor is designed, constructed, and operated consistent with key assumptions and risk insights.
  - Risk significant SSCs do not degrade unacceptably during operation.
  - Frequency of transients is minimized.
  - Risk significant SSCs function reliably.

U.S.NRC
United States Nuclear Regulatory Commission
Protecting People and the Environment

206

SECY-95-132 outlines the requirements for a design certification reliability assurance program (RAP). The RAP provides reasonable assurance that:

(1) an advanced reactor is designed, constructed, and operated in a manner that is consistent with the assumptions and risk insights for risk-significant SSCs;

(2) the risk-significant SSCs do not degrade to an unacceptable level during plant operations;

(3) the frequency of transients that challenge advanced reactor SSCs are minimized; and

(4) risk-significant SSCs function reliably when challenged.

The RAP for advanced reactors is implemented in two stages. The first stage, the design RAP (D-RAP), applies before the initial fuel load; the second stage, the operational reliability assurance process (O-RAP), applies to reliability assurance activities for the operations phase of the plant life cycle. The NRC staff reviews the D-RAP during design certification and the O-RAP during the COL stage.

Reliability Assurance Program

- Areas of staff review:
  - Process to evaluate and prioritize SSCs based on their risk significance.
  - The proposed list of risk significant SSCs.
  - For risk significant SSCs:
    - The process for considering failure modes.
    - Operation, maintenance and monitoring activities.

U.S.NRC
United States Nuclear Regulatory Commission
Protecting People and the Environment

207

SRP Section 17.4, “Reliability Assurance Program,” dated April 1996, provides guidance for reviewing RAPs.

The NRC staff’s evaluation of the Westinghouse AP1000 RAP was based on the staff positions discussed in SECY-95-132 and the guidance in draft SRP Section 17.4.

The areas reviewed included the following:

- The description of the RAP used during the design that includes scope, purpose, objectives, and essential elements of the D-RAP.
- The process used to evaluate and prioritize the structures, systems, and components in the design on the basis of their degrees of risk significance.
- A list of the structures, systems, and components designated as risk significant.

For the structures, systems, and components designated as risk significant, (1) A process for determining dominant failure modes that considered industry experience, analytical models, and applicable requirements, and (2) key assumptions and risk insights from probabilistic, deterministic, or other methods that considered operation, maintenance, and monitoring activities.

The NRC staff reviewed the proposed D-RAP for the AP1000 design using the guidance in draft SRP Section 17.4 and SECY-95-132.

The NRC staff also reviewed information from the AP1000 probabilistic risk assessment (PRA), Chapter 50, “Importance and Sensitivity Analysis,” deterministic methods, and expert judgment from all chapters of the DCD to evaluate whether all risk-significant SSCs had been identified for inclusion in the D-RAP for the AP1000 design.

The COL action items commit the COL applicant to factor the results of the RAP into operating, maintenance and monitoring activities.

COL Items

- The COL applicant will address:
  - Design phase quality assurance program.
  - Quality assurance program for procurement, fabrication, installation, construction, and testing of SSCs.
  - The quality assurance program will include provisions for seismic category II SSCs.

U.S.NRC
United States Nuclear Regulatory Commission
Protecting People and the Environment

208

Summarize the COL action items on the slide.

COL Items

- The COL applicant or holder will establish PRA importance measures, an expert panel process, and other methods to define the site-specific list of SSCs under the scope of RAP.
- The COL applicant will integrate the objectives of the RAP for the operational phase into the quality assurance program.

U.S.NRC
United States Nuclear Regulatory Commission
Protecting People and the Environment

209

Summarize the slide.

It is important to note that the first bullet includes addressing failures of non-safety-related, risk-significant SSCs that result from design and operational errors in accordance with SECY-95-132, Item E.

COL Items

- The COL applicant will address its QAP for operations.
- The COL will:
  - Perform tasks necessary to maintain reliability of risk significant SSCs.
  - Define maintenance activities to be performed on plant equipment, including SSCs indentified in the D-RAP.

U.S.NRC
United States Nuclear Regulatory Commission
Protecting People and the Environment

210

Summarize the actions on the slide.

SER Evaluation Findings

- GDC 1 requires appropriate quality standards.
- 10 CFR 50 App B establishes required QA criteria.
- NRC found acceptable the applicants:
  - QA program acceptable for design procurement and fabrication.
  - Treatment of RTNSS.
  - Reliability Assurance Program.
- The COL applicant will submit its own QA program.

U.S.NRC
United States Nuclear Regulatory Commission
Protecting People and the Environment

211

Summarize the slide.

AP1000 Instrumentation and Control Systems

Module 21
SER Sections 7.1 and 7.2

INSTRUCTOR: Dr. John H. Bickel
October 2008

U.S.NRC
United States Nuclear Regulatory Commission
Protecting People and the Environment

212

This module deals with the DCD description of the digital I&C platform systems used for RTS and ESFAS applications. The intent here is to cover the regulatory requirements and standards this equipment is designed against.

Module 21 will deal with specific applications.

Learning Objectives

- Understand currently licensed digital instrumentation and control systems platform is obsolete - replacement must conform to original Design Acceptance Criteria (DAC).
- Understand high-level NRC DAC related to I&C systems.
- Understand how AP1000 addressed these criteria via conformance to reg. guides and standards.
- Understand areas already reviewed vs. those requiring future reviews.
- Understand where to find more in-depth information.

U.S.NRC
United States Nuclear Regulatory Commission
Protecting People and the Environment

213

None.

NRC Scope of Review

- All parties realize that I&C technology changes faster than NPP piping, civil construction, etc.
- Rather than focusing on specific I&C platform, which will evolve 2-3 times before initial NPP startup.
- Focus on Design Acceptance Criteria (DAC).
- New I&C platform would have to meet DAC in order to match bases of existing platforms that were approved.

U.S.NRC
United States Nuclear Regulatory Commission
Protecting People and the Environment

214

Any party starting to build an AP1000 reactor plant would not design the I&C system at the very start because the rate of technical innovation in I&C technology is changing so rapidly. For example, if an I&C system were designed and procured now, the equipment would be obsolete and spare parts hard to obtain by the time the NPP were completed.

This mirrors the experience of many utilities in the USA in the 1970-1980s that procured their main plant computers about the time their control rooms were being designed and laid out. In many cases the plants were delayed and by the time they started up they had plant computers that were “undersized,” “obsolete,” and reliant on spare-parts no longer manufactured. This resulted in efforts to replace computers about the same time the plants initially started up.

The key item is that NRC reviewed and approved a ***high-level architecture.*** In the future, a new platform could be implemented as long as it meets the same design acceptance criteria. This DAC would comprise the regulatory guides, industry standards, and additional commitments made in the AP1000 DCD and SER.

Design Acceptance Criteria Bases

Conformance to Regulations
- 10CFR 50.55a (Codes & Standards)
- GDC 1 (Quality Standards)
- GDC 2 (Natural Phenomenon)
- GDC 4 (Dynamic Effects)
- GDC 12 (Suppress Power Oscillations)
- GDC 13 (I&C)
- GDC 19 (Control Room)
- GDC 20 (Protection Functions)
- GDC 21 (Protection Reliability & Test)
- GDC 22 (Protection Sys. Independence)
- GDC 23 (Protection Sys. Failure)
- GDC 24 (Cont-Prot Sys. Independence)
- GDC 25 (Reactivity Protection)
- GDC 29 (A.O.O. Protection)

Conformance to Reg. Guides
- Reg. Guide 1.22 (Per. Tests)
- Reg. Guide 1.47 (Bypass/Inop.)
- Reg. Guide 1.53 (Single Failure)

Conformance to Reg. Guides (cont.)
- Reg. Guide 1.75 (Independence)
- Reg. Guide 1.89 (Environment Qualification.)
- Reg. Guide 1.97 (Post-Acc. Mon.)
- Reg. Guide 1.105 (Setpoints)
- Reg. Guide 1.118 (Testing)
- Reg. Guide 1.152 (Dig. I&C)
- Reg. Guide 1.153 (Prot. Criteria)
- Reg. Guide 1.168 (Software V&V)
- Reg. Guide 1.169 (Soft. Conf. Mgmt.)
- Reg. Guide 1.170 (Soft. Spec.)
- Reg. Guide 1.173 (Soft. Dev. Proc.)
- BTP HICB-11 (Isolation Devices)
- BTP HICB-14 (Software Reviews)
- BTP HICB-17 (Self-Test Surveillance Testing)
- BTP HICB-18 (PLCs)
- BTP HICB-19 (D^3 for Dig. I&C)
- BTP HICB-21 (Real Time Performance)

U.S.NRC
United States Nuclear Regulatory Commission
Protecting People and the Environment

215

The slide you are viewing list all of the GDCs and regulatory guides that were considered in the AP1000 I&C platform portion of the SER.

I strongly encourage the participants to obtain full copies of the above list, however going into them in any detail is not practical given the short time available for this presentation.

Design Acceptance Criteria

- Categorized into three types of design requirements:
  - Functional requirements
    - Independent of I&C platform, defined by accident analysis requirements on timing of assumed protective action, point of actuation.
  - I&C hardware design and qualification
    - Requirements to assure highly reliable operation, qualification to avoid environmental related common cause faults which could prevent proper functioning.
  - I&C software design and qualification
    - Requirements to assure real-time software performance and reliability.

U.S.NRC
United States Nuclear Regulatory Commission
Protecting People and the Environment

216

None.

DAC: Functional Requirements

- Functional Requirements address historical I&C issues not dependent on type of I&C platform (analog, relays, solid state logic, or digital computer based). These include:
  - Margins between operating point and fuel damage limits.
  - Separation of control and protection functions.
  - Completion of protection functions once initiated.
  - Capability to test, calibrate, maintain on-line.
  - Status indication for operators.
  - Manual operation capability.

U.S.NRC
United States Nuclear Regulatory Commission
Protecting People and the Environment

217

This slide deals with the functional requirements.

Functional requirements are the specific design requirements to perform some function, at some physical operating point, and with some physical capacity.

You will view examples of this on the next slide.

Functional Requirements

- Conformance to AP1000 DAC requires conforming to the following standards referenced for I&C:
  - IEEE Std 338-1987 (Criteria for Periodic Surveillance Testing).
  - IEEE Std 379-2000 (Application of Single Failure Criterion to Safety Systems).
  - IEEE Std 603-1991 (Criteria for Safety Systems).
- Additionally, unique to digital I&C systems:
  - IEEE Std 7-4.3.2-1993 (Criteria for Programmable Digital Computer Systems in Safety Systems).

U.S.NRC
United States Nuclear Regulatory Commission
Protecting People and the Environment

218

I would like to note that some of the design acceptance criteria is historical and would apply to any type of I&C system. An example of this is; IEEE 338, 379 and 603.

Additionally, others are unique to digital I&C systems, for example; IEEE 7-4.3.2.

DAC: Hardware Design and Qualification

- Hardware design and qualification requirements address historical hardware design issues which are not unique to digital I&C. These include:
  - Redundancy (single failure criterion).
  - Defense against common cause failure.
  - Physical separation of redundant trains.
  - Electrical isolation.
  - Fire protection (cabling systems, switchboards, cabinets).
  - Seismic qualification of components.
  - Qualification for: voltage surge, temperature.
  - Immunity from electronic signal noise, EMI/RFI.

U.S.NRC
United States Nuclear Regulatory Commission
Protecting People and the Environment

219

Hardware design and qualification standards deal with issues such as reliability and defense against common cause failure.

In this regard, we attempt to deal with common cause failure by systematically identifying historical external events which could compromise multiple trains of equipment. We then address issues such as seismic, fire, and voltage surges and then design the equipment so that it will not fail in such circumstances.

Hardware Design and Qualification

- Conformance to AP1000 DAC requires conforming to the following hardware standards referenced for I&C:
  - IEEE Std 323-1983 (Qualifying Class 1E Equipment).
  - IEEE Std 344-1987 (Seismic Qualification of Class 1E Equipment).
  - IEEE Std 384-1992 (Criteria for Independence of Class 1E Equipment and Circuits). *NOTE: This standard invokes several others!*
  - MIL-STD-461C (Electromagnetic Emission and Susceptibility Requirements for the Control of Electromagnetic Interference).
  - EPRI TR-107330 (Requirements Specification for Qualifying a Commercially Available PLC for Safety-Related Applications in NPPs).
  - EPRI TR-102323 Rev1 (Guidelines for Electromagnetic Interference Testing).
  - EPRI TR-106439 (Guidelines for Evaluation and Acceptance of Commercial Grade Digital Equipment for Nuclear Safety Application).

U.S.NRC
United States Nuclear Regulatory Commission
Protecting People and the Environment

220

The following standards, and EPRI topical reports, were referenced in the DCD. The NRC relied on these while reaching their conclusions about acceptable levels of safety.

Independence of Redundant Wiring

- Reg. guides identify specific required physical separation of redundant wiring to assure independence.
- Reg. guides frequently reference or endorse IEEE, IEC standards and EPRI topical reports as acceptable ways to achieve conformance.

U.S.NRC
United States Nuclear Regulatory Commission
Protecting People and the Environment

221

One of the key issues NRC looked at in evaluating the high-level architecture of the AP1000 I&C design, was independence of redundant safety related systems.

This is an **example of the problem** by using pictures from equipment that I inspected in Europe several years ago. The equipment was supposedly built according to US IEEE standards. It is important for me to note that this is not the type of equipment that NRC reviewed for AP1000 and is for illustrative purposes only.

The NRC relies upon **commitments for compliance** with these standards as one of the as one of the key bases for acceptability. In order to confirm that such commitments are actually met, the NRC also carries out independent inspections.

The equipment you are looking at is the front panel of a cabinet that contains several 2/3 coincidence voting logic cards used to generate a reactor trip. It is important to note the single black cable that is vertically traversing. Interrupting the connection via 2/3 logic causes the generation of a reactor trip by interrupting the local control rod power supplies. The equipment was supposedly built to conform to IEEE-384 which invokes IEEE-420 for the details within the cabinets.

Example of Electrical Standard

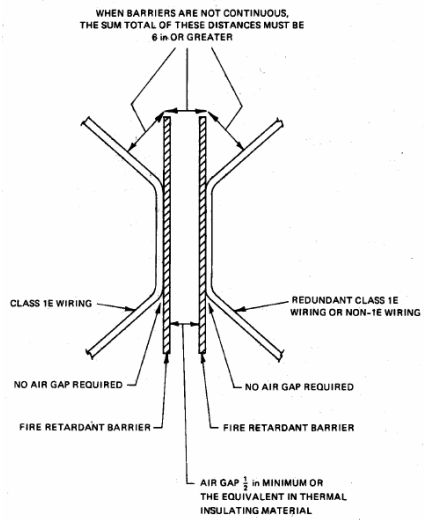

- Taken from IEEE Std 420-1982.
- This is one approach to layout redundant Class 1E signal wiring via fire retardant barriers and air gaps.

U.S.NRC
United States Nuclear Regulatory Commission
Protecting People and the Environment

222

This slide indicates the requirements of IEEE-420.

It is important to note the class 1E wiring and the required separation distance with/without qualified fire barriers.

Violation of Channel Independence

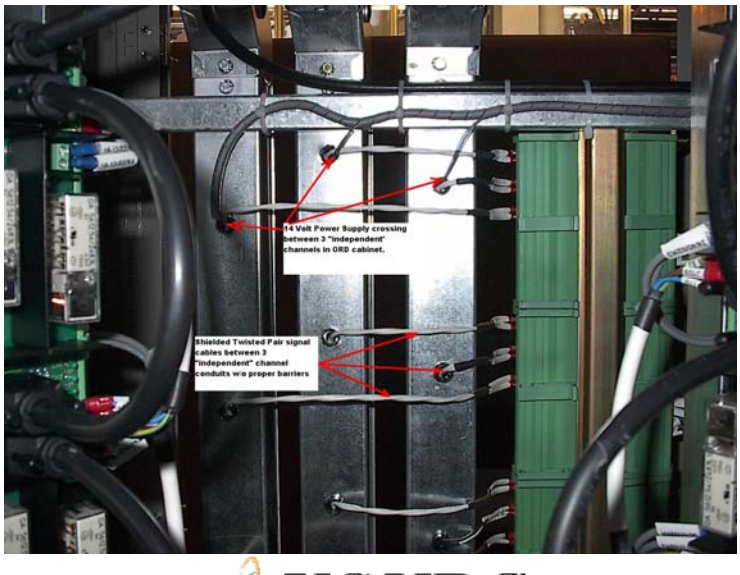

U.S.NRC
United States Nuclear Regulatory Commission
Protecting People and the Environment

223

In performing the equipment inspection, I requested the manufacturer to take off the back panels in order to reveal what could not be seen from the front of the cabinet.

It is important to note the three vertical metal conduits which maintain the required separation between the three redundant trip channel trips.

As labeled in the picture, we found numerous violations of the requirements of the following standards:

(1) The 14V power supply was hidden behind cross beam and was cross connecting all three of the safety channels. This configuration was a complete violation of IEEE-420 which is one way of addressing channel independence required in Reg. Guide 1.75.

(2) It is important to note that the three digital signal cables that are going to the 2/3 coincidence logic cards were not restrained and had no qualified fire barriers.

As the regulators who will take responsibility to confirm that the equipment manufactured for installation at your NPPs, you will need to conduct your own independent verifications that the equipment that is procured fully meets the standards. Additionally, you may sometimes need to make the manufacturer pull the back panels off in order to get a complete view of what is just beyond eyesight.

Example of Field Corrected Wiring

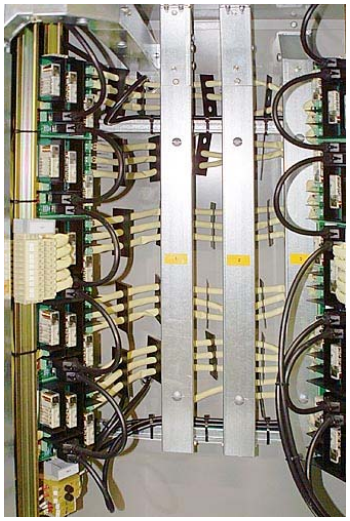

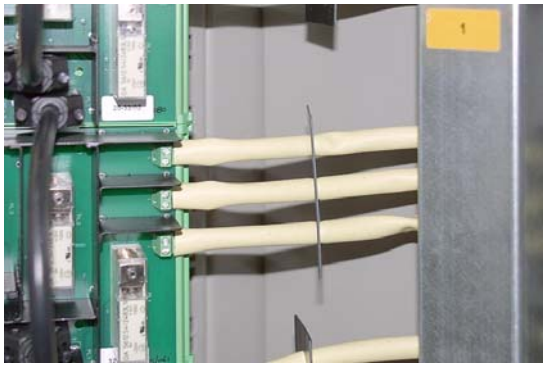

- Fire retardant sheathing on all signal cables.
- Metal cable spacers to maintain spacing.

U.S.NRC
United States Nuclear Regulatory Commission
Protecting People and the Environment

224

This slide illustrates a specific job where I advised the regulatory body, not the NRC in this case, to **reject the equipment**.

The manufacturer had to rebuild the insides of the cabinets. This photo shows the installation of qualified fire protective jackets around the cables and the use of metal cable spacers to maintain the cables separated per the requirements of IEEE 420.

DAC: Software Design and Qualification

- Software design and qualification requirements address unique issues raised by safety devices running stored, rapidly updatable computer software. These include:
  - Software design and development processes.
  - Software quality assurance.
  - Software verification and validation processes, audits.
  - Commercial dedication processes.

U.S.NRC
United States Nuclear Regulatory Commission
Protecting People and the Environment

225

It is important to note that software design and qualification is unique to digital I&C systems.

Software Testing, V&V

- Software based systems have more potential “branch states” requiring testing and verification.

U.S.NRC
United States Nuclear Regulatory Commission
Protecting People and the Environment

226

This is a photo of a digital I&C channel for a European NPP that is undergoing a software burn-in testing in the manufacturers shop.

This equipment is not typical of what NRC has reviewed for AP1000 and it is for illustrative purposes only.

The software testing is performed to confirm, to the most reasonable extent, that all possible permutations of inputs have been tested to confirm proper response by the I&C system. This typically entails using another computer to generate the test inputs and log the results of the test outputs. As one can imagine, this means that the testing gear is heavily relied upon for quality assurance purposes and it must therefore come under QA requirements to the same extent that any **test equipment** would.

Software Design and Qualification

- Conformance to AP1000 DAC requires conforming to following software standards referenced for I&C:
  - IEEE Std 739-1989 (Software Quality Assurance Plans).
  - IEEE Std 828-1990 (Software Configuration Management Plans).
  - IEEE Std 829-1983 (Software Test Documentation).
  - IEEE Std 830-1993 (Recommended Practice for Software Requirements).
  - IEEE Std 1012-1986 (Software Verification and Validation Plans).
  - IEEE Std 1016-1987 (Recommended Practice for Software Design Description).
  - IEEE Std 1028-1988 (Software Reviews and Audits).
  - IEEE Std 1042-1987 (Software Configuration Management).
  - IEEE Std 1074-1995 (Developing Software Life Cycle Processes).
  - IEC Standard 880-1996 (Software for Computers in NPP Safety Systems).
  - ASME NQA-2a-1990 (Quality Assurance Requirements for Computer Systems for Nuclear Facility Applications).

U.S.NRC
United States Nuclear Regulatory Commission
Protecting People and the Environment

227

This slide provides examples of the software standards that are relied upon by the designer and by the NRC. The must rely on these standards in order to have confidence in the reliability of the reactor trip and ESFAS functions, which rely upon the digital I&C platform.

I recommend that the participants acquire and review the requirements contained in this standard. I do not have the time to go into the details that is required in each of these standards.

Defense in Depth and Diversity

- Common cause failure has been historic concern in highly redundant Class 1E systems.
- NUREG-0493 (1979) evaluated common cause failure and means of assuring defense in depth and diversity (D3).
- Probability of software common cause failure difficult to assess.
- SECY-93-087 (1993) defines NRC position on D3 for ALWRs:
    1. Perform D3 analysis to demonstrate common cause failures have been identified and adequately addressed.
    2. Each event analyzed in safety analysis shall be analyzed using best-estimate methods to demonstrate adequate diversity.
    3. If postulated common cause failure can disable safety function – diverse protection (not necessarily Class 1E) shall be provided.
    4. Displays and manual controls in MCR to allow manual actuation and monitoring which is independent and diverse from safety computer.

U.S.NRC
United States Nuclear Regulatory Commission
Protecting People and the Environment

228

Defense in Depth and Diversity is recognized as the primary defense against software common cause failure.

The NRC has looked at reactor trip system common cause failure since the 1970's. NUREG-0493, published in 1979, was an evaluation of the earlier Westinghouse RESAR-414 reference design.

A key problem that the NRC has had to deal with is the difficulties in assessing the likelihood of software common cause failure. There have only been 1-2 recorded software related common cause failures observed in US NPP safety systems and all of these were attributed to first generation systems, which are not typical of what would be utilized today. In both of these cases, the failures were identified by design reviews but did not lead to an actual event.

The NRC staff defined guidance in SECY-93-087 of how they wanted to treat software common cause failure. The steps are outlined below.

High Level D3 Implementation

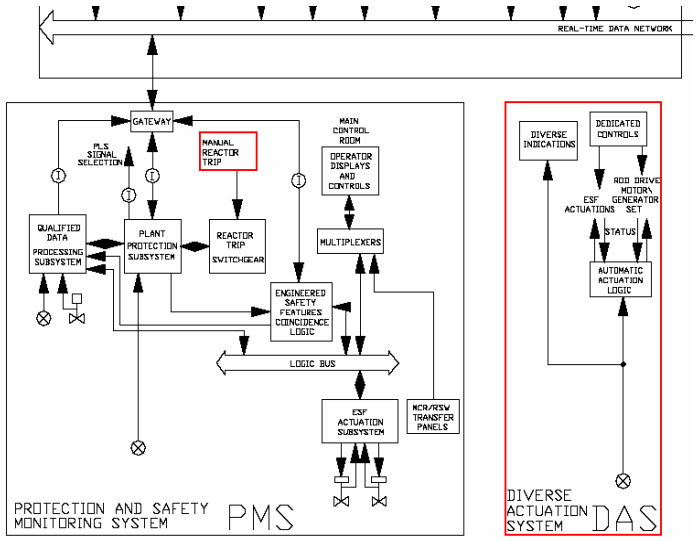

U.S.NRC
United States Nuclear Regulatory Commission
Protecting People and the Environment

229

This slide shows the implementation of D3 on the AP1000 design through the use of a non-safety Diverse Actuation System that would employ technology and software differently than that employed in the PMS, reactor trip and ESFAS, actuate on different parameters, and actuate safety components in a different fashion.

As an example, the main reactor trip would typically employ UV trips of control rod power supplies, whereas the diverse DAS trip would employ a shut trip.

SER Evaluation Findings

- NRC reviewed and approved two possible AP1000 reference I&C platforms: Eagle-21 and Advant Common Q.
  - Eagle-21 previously approved on AP600 design certification:
    - Eagle-21 used on NPPs in early 1990's for RPS/ESFAS retrofits.
    - Technology is obsolete (late 1980's) and replacement spare parts are very difficult to obtain.
    - Efforts are underway at NPPs to replace with newer digital platforms.
  - Advant Common Q as previously reviewed on CE System 80+ design certification:
    - Advant Common Q technology developed by ABB in Europe.
    - Based upon Motorola MC68360 QUICC microprocessor from late 1990's.
    - Freescale (Motorola) began phasing out this technology several years ago.

U.S.NRC
United States Nuclear Regulatory Commission
Protecting People and the Environment

230

The current SER notes that AP1000 I&C has been reviewed and accepted for two previously existing digital I&C platforms, which are the **Eagle-21** and the **Advant Common Q.**

I must mention that **both** of the platforms are **obsolete** and anyone applying to build an AP1000 reactor in the US would have to choose a new I&C platform.

COL Items

- NRC review identified that hardware/software development tools (automated tools and design support software) need to be included in commercial dedication process.
- NRC expects the I&C system developer to verify that hardware/software development tools function correctly and verify quality of hardware/software development tools used in design.
- DCD Tier 2 Section 7.1.6 states:
  - COL applicants referencing AP1000 certified design will provide resolution for generic open items and plant specific action items resulting from NRC review of I&C platforms (Item 7.1.7-1).

U.S.NRC
United States Nuclear Regulatory Commission
Protecting People and the Environment

231

The NRC identified a number of areas that would need further review and evaluation. These are summarized below.

COL Items

- "If" Advant Common Q system were installed:
  - S600 I/O modules would need to be assessed for suitability.
  - If Flat Panel Display System (FPDS) described in DCD is replaced – user interface need review as plant specific item.
  - If FPDS is utilized a plant specific FMEA is required.
  - Plant specific temperature, humidity, seismic, EMI/RFI must be consistent with Advant Common Q (COL Item 7.2.3-1).
  - Any additional safety applications will require plant specific FMEA (COL Item 7.2.3-2).
  - Plant specific response time testing (COL Item 7.2.3-3).
  - Analysis to determine impact of additional resource sharing.
  - Verification of setpoint analysis (COL Item 7.2.7-1).

U.S.NRC
United States Nuclear Regulatory Commission
Protecting People and the Environment

232

None.

AP1000 Instrumentation and Control Systems

Module 22
SER Sections 7.3 – 7.7

INSTRUCTOR: Dr. John H. Bickel
October 2008

U.S.NRC
United States Nuclear Regulatory Commission
Protecting People and the Environment

233

In Module 20, I covered the regulatory review of the digital I&C platform system. In Module 21, I will cover the specific I&C functions.

Learning Objectives

- Understand high-level NRC Design Acceptance Criteria (DAC) related to *Reactor Trip System* and *ESF Actuation.*
- Understand high-level NRC Design Acceptance Criteria for:
  - Systems Required for Safe Shutdown.
  - Safety-Related Display Information Systems.
  - Interlock Systems Important to Safety.
  - Non-safety Control and Instrumentation Systems.
- Understand unique NRC regulations for non-safety I&C systems which are credited under RTNSS process:
  - Diverse Actuation System for ATWS mitigation.
  - Diverse Actuation System for ESFAS.
- Understand where to find more in-depth information.

U.S.NRC
United States Nuclear Regulatory Commission
Protecting People and the Environment

234

Reliance On IEEE Std. 603-1991

AP1000 I&C design commits to full IEEE Std. 603-1991 conformance:

- Comprehensive definition of system functional requirements.
- Proper application of IEEE Std. 379-1988 single failure criterion.
- Completion of protective action once manual/auto actuated.
- Application of ASME NQA1-1989 quality assurance process.
- Environmental Qualification per IEEE Std. 323-1983, IEEE Std. 627-1980.
- Independence of: redundant trains, DBEs, safety-control systems.
- Use of Qualified Isolation Devices.
- Physical separation per IEEE Std. 384-1981.
- Capability to test and calibrate per IEEE Std. 338-1987.
- Display of manually controlled actions per IEEE Std. 497-1981.
- Bypass and inoperable status indication.
- Control of access.
- High Reliability design per analysis such as IEEE Std. 352-1987.

U.S.NRC
United States Nuclear Regulatory Commission
Protecting People and the Environment

235

Reliance On IEEE Std. 603-1991

- Provision for automatic and manual actuation and control.
- Provision for diversity to cope with interactions between sense and control features in other systems.
- Derivation of system inputs from direct measurements of variables.
- Provision for sensor calibration and testing.
- Provision for operating bypasses that automatically re-instate when needed (e.g., start-up related trip auto reinstate when power < 10^{-4}%).
- Provision for maintenance bypasses.
- Setpoints determined per ISA S67.040-1987.
- Provision of power supplies per IEEE Std. 308-1980.

U.S.NRC
United States Nuclear Regulatory Commission
Protecting People and the Environment

236

Reactor Trip System (RTS)

- High source range flux
- High intermediate range flux
- High power range flux
- High overpower range flux
- High flux rate of change
- Overtemperature ΔT
- Overpower ΔT
- High/Low pressurizer pressure
- High pressurizer water level
- Low RCS flow
- RCP overspeed
- High RCP bearing water temp.
- High/Low SG water level
- ADS actuation
- Core Makeup Tank (CMT) trip
- ESFAS Actuation
- Manual Trip

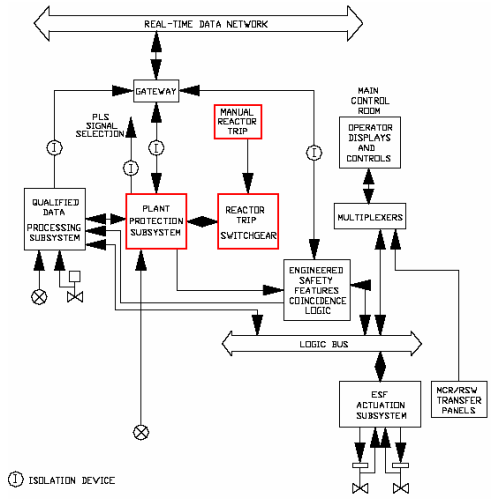

U.S.NRC
United States Nuclear Regulatory Commission
Protecting People and the Environment

237

This figure shows a portion of the PMS that accomplishes the reactor trip function.

There are 15 automatic reactor trips generated by the digital I&C – listed on the left.

There is also a manual reactor trip which bypasses the computer portions and directly interfaces with the reactor trip switchgear.

Reactor Trip System (RTS)

NRC concluded that:

- RTS is properly designed Class 1E system.
- RTS is properly qualified environmentally and seismically.
- RTS is 4-train system - fully compliant with single failure criterion and 2/4 coincidence logic.
- 4 sensors each powered by Class 1E battery backed power supply.
- Design is fully conforms with *IEEE Std 603-1991* and has complete electrical and physical separation.
- This will be verified again as ITAAC item in DCD Tier 1, Section 2.5.2.

U.S.NRC
United States Nuclear Regulatory Commission
Protecting People and the Environment

238

NRC concluded that the AP1000 RTS was acceptable based upon the following assumptions.

All of these would have to be checked and confirmed via NRC audits and inspections in the future.

ESFAS Logic

- *S-signal*, CMT injection
- Auto Depressurization (ADS)
- Containment isolation
- Passive RHR alignment
- RCP trip
- Boron dilution block
- CVCS isolation
- Main Feedwater isolation
- Startup Feedwater isolation
- Turbine trip
- Steamline isolation
- Steamdump isolation
- SG Blowdown isolation
- IRWST recirculation
- Passive Containment Cooling actuation
- Control Room Isolation

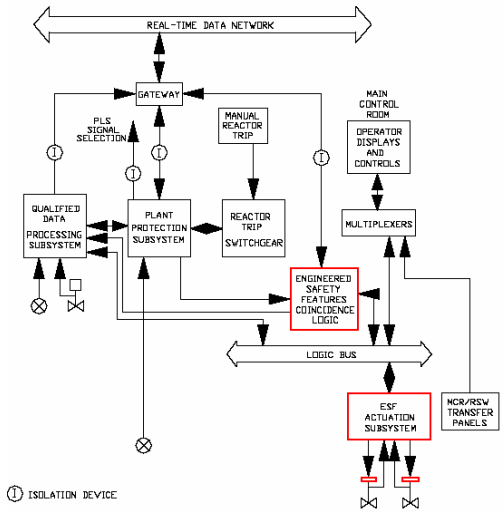

U.S.NRC
United States Nuclear Regulatory Commission
Protecting People and the Environment

239

This slide shows the ESFAS portion of the PMS. There are 16 separate ESF functions controlled by the ESFAS logic.

NOTE: the capability exists to manually actuate each of these functions – although not shown.

The specific parameter combinations which lead to these individual actuations are summarized in the DCD.

ESFAS Logic

NRC concluded that:

- ESFAS logic, Plant Safety Monitoring System (PMS), and protection actuation circuits design in DCD is acceptable.
- Based upon design description in DCD and commitments to DCD Tier 1 ITAACs (Table 2.5.2-8) ensures ESFAS will perform as designed.

U.S.NRC
United States Nuclear Regulatory Commission
Protecting People and the Environment

240

Safe Shutdown Systems

NRC concluded that:

- For reactor or turbine trip non-safety-related plant systems automatically place plant in hot standby.
- Additional non-safety-related systems available for routine depressurization and cooldown.
- ESF systems are designed to establish and maintain safe shutdown conditions following accidents.
- Safe shutdown system design is acceptable and conforms to required criteria.

U.S.NRC
United States Nuclear Regulatory Commission
Protecting People and the Environment

241

None.

Safety-Related Information Displays

NRC concluded that:

- AP1000 properly identified all required post-accident monitoring variables, ranges, power supplies as required by Reg. Guide 1.97.
- AP1000 network Gateway provides interface between non-safety real time data network and safety-related PMS.
- Gateway design is limited in detail because communication technology at plant construction time may change – therefore *only functional requirements evaluated.*
- Real time network activity will not prevent PMS functioning.
- Bypass/Inoperable status indication meets Reg. Guide 1.47.

U.S.NRC
United States Nuclear Regulatory Commission
Protecting People and the Environment

242

A key aspect of the AP1000 control room design is the replacement of fixed instrument displays (meters, panel indicators, strip chart recorders, etc.) with flat panel display systems that can be configured as needed.

One of the key items NRC looked at in this area was conformance with Reg. Guide 1.97 – instrumentation to monitor the course of an accident. This includes ranges of instrument monitoring capability, power supplies, qualification of instruments for post accident environment. NRC concluded that the AP1000 design meets all the Reg. Guide 1.97 requirements.

The Gateway (between PMS and Real Time Data Network) provides appropriate isolation and separation.

Consistent with previous comments about the I&C platform being obsolete and requiring a future redesign (and NRC review) effort the Gateway design was found to be limited in detail. The function was evaluated and found to be reasonable.

NRC concluded real time network activity was not likely to impact information availability to operators. This is a key issue from past experience in Europe where a plant implemented a digital I&C platform upgrade that was **undersized** and resulted in severe limitation in following even a simple plant trip.

Finally, NRC concluded that the display systems meet Reg. Guide 1.47

Real-Time Data Network Interface to Network Gateway

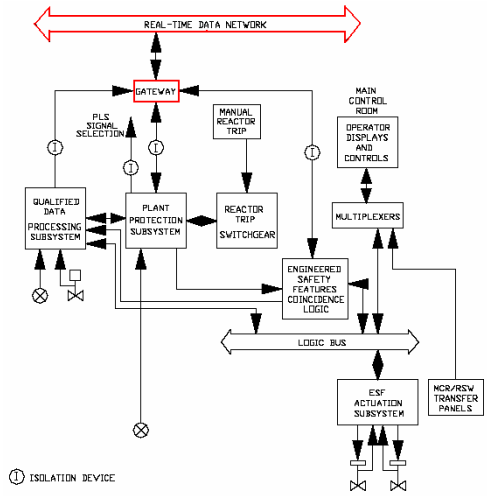

U.S.NRC
United States Nuclear Regulatory Commission
Protecting People and the Environment

243

This figure shows the relationship between the PMS and the Real-Time Data Network – with the interface through the GATEWAY.

Interlock Systems

NRC concluded that:

- Normal RHR (RNS) interlocks conform to IEEE Std 603-1991.
- Accumulator Isolation, IRWST Discharge MOVs conform to IEEE Std 603-1991.
- Core Makeup Tank Cold-Leg Balance Line Isolation Valves conform to IEEE Std 603-1991.
- PRHR Heat Exchanger Inlet Isolation Valve conforms to IEEE Std 603-1991.
- Interlock systems meet all required criteria.

U.S.NRC
United States Nuclear Regulatory Commission
Protecting People and the Environment

244

Non-Safety Control & Instrumentation

AP1000 includes following non-safety control systems:

- Reactor power control.
- Rod control.
- Pressurizer pressure control.
- Pressurizer water level control.
- Feedwater control.
- Steam dump control.
- Rapid power reduction.
- *Diverse Actuation System* (DAS) – non-safety class system.
- DAS is diverse backup to protection systems to reduce risk for transients with common cause failure of protection and control systems.
- DAS functional requirements selected based upon AP1000 PRA.

U.S.NRC
United States Nuclear Regulatory Commission
Protecting People and the Environment

245

These are the non-safety control systems documented in the DCD. Typically the only concern NRC has about these is assuring that they do not interfere with safety systems, that safety systems do not take credit for their operation in the accident analysis, and that their failure is no worse than events analyzed in the DCD Accident Analysis in Chapter 15.

A key non-safety control system is the DAS (mention previously in Module 20).

DAS functional requirements were selected based upon the AP1000 PRA. Basically DAS was credited in scenarios to eliminate risk outliers.

Diverse Actuation System

DAS provides automatic:

- Reactor trip via tripping motor-generator sets, Turbine trip, RCP trip, Initiation of PRHR on low wide range SG level.
- Initiation of PRHR and IRWST gutter valve closure upon high hot-leg temperature.
- Reactor trip via tripping motor-generator sets, Turbine trip, actuation of Core Makeup Tanks (CMT), RCP trip, on low pressurizer water level.
- Isolation of selected containment penetrations, initiation of passive containment cooling water flow on high containment temperature.

U.S.NRC
United States Nuclear Regulatory Commission
Protecting People and the Environment

246

Diverse Actuation System

DAS provides following diverse manual actuation:

- Reactor and Turbine Trip.
- Initiation of PRHR and IRWST gutter valve closure.
- Initiation of Core Makeup Tanks (CMT), RCP trip.
- ADS valve actuation (Stages 1, 2, 3, 4).
- Passive containment cooling actuation.
- Isolation of selected containment penetrations.
- Containment Hydrogen Igniter actuation.
- IRWST injection.
- Containment recirculation initiation.
- IRWST drain to containment initiation.

U.S.NRC
United States Nuclear Regulatory Commission
Protecting People and the Environment

247

These are the actions which DAS can initiate.

Diverse Actuation System

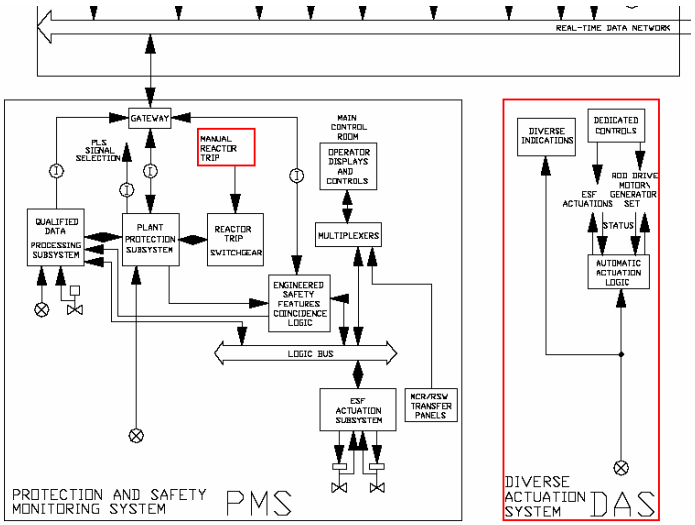

U.S.NRC
United States Nuclear Regulatory Commission
Protecting People and the Environment

248

This figure shows the relationship between DAS and the PMS. Note that by design, DAS does not use information from the real-time data network – as this might be a source of common cause failure of the PMS.

Non-Safety Control & Instrumentation

NRC concluded that:

- Non-safety control systems were properly isolated from safety systems and meet guidelines in IEEE Std 603-1991.
- DCD Chapter 15 safety analysis results are not dependent upon response of non-safety control systems.
- Control system failures do not result in safety analysis results being more severe than analyzed.
- DAS, as designed, meets requirements for providing *Defense in Depth.*
- DAS design process in DCD Tier 1 Section 2.5.1 provides reasonable assurance DAS will meet quality standards and is thus acceptable.

U.S.NRC
United States Nuclear Regulatory Commission
Protecting People and the Environment

249

SER Evaluation Findings

- Design "*as presented"* complied with Standard Review Plan with few exceptions and thus with General Design Criteria.
- I&C committed to full IEEE Std 603-1991 compliance.
- "Although *design not completely developed*, NRC safety determination under 10 CFR 52 will rely on satisfactory demonstration by COL applicant that *digital I&C design development process will accomplish its safety functions*."
- NRC staff will confirm this by audits of ITAAC implementation in various phases of design development.

U.S.NRC
United States Nuclear Regulatory Commission
Protecting People and the Environment

250

None.

AP1000 Electric Power Systems

Module 23
SER Section 8

INSTRUCTOR: Dr. John H. Bickel
October 2008

U.S.NRC
United States Nuclear Regulatory Commission
Protecting People and the Environment

251

I will be presenting Module 19 which deals with Electric Power Systems.

This is covered in DCD Section 8.0 of the Tier 2 material.

Learning Objectives

- Understand high-level NRC acceptance criteria related to Offsite and Onsite Power Systems.
- Understand how AP1000 addresses these criteria via conformance to Reg. Guides and Standards.
- Understand high-level bases of how AP1000 is exempted from portions of GDC 17.
- Understand areas already reviewed vs. those requiring future reviews.
- Understand where to find more in-depth information.

U.S.NRC
United States Nuclear Regulatory Commission
Protecting People and the Environment

252

The objectives of this lecture module are to describe the “high-level” regulations and requirements dealing with Electric Power Systems.

It is not practical in the allotted time to cover the full details of all these regulations. It is recommended that participants review the referenced section of 10 CFR Part 50, Appendix A, General Design Criteria and the various Regulatory Guides referenced in this section.

Typical EPS Design in Current Day NPPs

- Offsite power from Start-up Transformer after trip.
- Redundant safety-related Diesels for AC-powered loads such as pumps, MOVs.
- Redundant DC-batteries power control circuits, vital instruments.
- Batteries support Diesels.
- Diesels support Batteries.
- Typical *4 hour Batteries.*

Taken from IEEE Std. 308

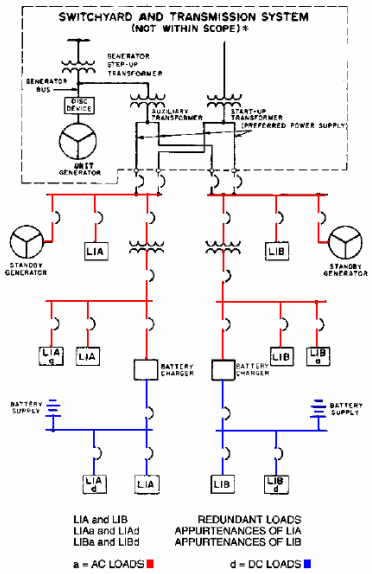

Figure 1—Example of a Class 1E power system for single unit with two 100% capacity divisions

U.S.NRC
United States Nuclear Regulatory Commission
Protecting People and the Environment

253

This is an example of current day onsite power system design. It is shown to better understand the changes taking place with AP1000.

AP1000
EPS Design

- Offsite AC connection is similar.
- Onsite AC *not relied upon* to support safety systems.
- ECCS is passive.
- Safety-related loads are DC-power actuated.
- 24 hour DC Batteries.
- Onsite AC relied upon to recharge Batteries, replenish water over long term.

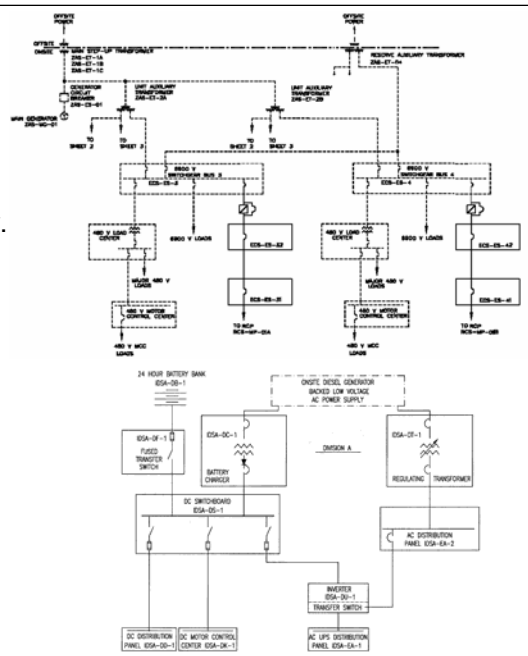

U.S.NRC
United States Nuclear Regulatory Commission
Protecting People and the Environment

254

The highest level top architecture is roughly the same in terms of offsite power connections.

The diesels are not shown as safety related. Their main function is recharging the batteries.

Acceptance Criteria

Offsite Power System

- GDC 17 (Electric Power System)
- SRP Section 8.1 (Electric Power)
- SRP Section 8.2 (Offsite Power)
- BTP PSB-1 (Adequacy of Station Electric Distribution Systems)

Onsite Power System

- 10 CFR 50.63 (Station Blackout)
- GDC 2 (Natural Phenomenon)
- GDC 4 (Dynamic Effects)
- GDC 17 (Electric Power System)
- GDC 18 (Testing Capability)
- GDC 50 (Electrical Penetrations)
- Reg. Guide 1.63 Rev. 3 (Class 1E Protection Devices)
- Reg. Guide 1.75 (Independence of Class 1E Circuits)
- Reg. Guide 1.106 (MOV Thermal Overload Protection)
- Reg. Guide 1.155 (Station Blackout)
- BTP ICSB-18 (Manually Controlled MOV Single Failure Criteria)

U.S.NRC
United States Nuclear Regulatory Commission
Protecting People and the Environment

255

The acceptance criteria for evaluating Electrical Power Systems fall into two general categories:

- Offsite Power
- Onsite Power

The various regulatory criteria for each are shown on this slide.

Electric Power Systems
Key General Design Criteria (GDC)

- ***GDC 2*** – Protection against Natural Phenomenon.
- ***GDC 4*** – Protection against Environmental and Dynamic Effects of Design Bases Events.
- ***GDC 17*** – Electric Power Systems.
- ***GDC 18*** – Inspection and Testing Capability.
- ***GDC 50*** – Containment Design Bases – Electrical Penetrations.

U.S.NRC
United States Nuclear Regulatory Commission
Protecting People and the Environment

256

These are the five GDCs that impact Electric Power Systems.

GDC 2: Protection Against Natural Phenomenon

- Structures, systems, components (SSCs) *important to safety* shall be designed to withstand effects of *earthquakes, tornadoes, hurricanes, floods*.

U.S.NRC
United States Nuclear Regulatory Commission
Protecting People and the Environment

257

GDC 2 is a general criteria that deals with protection against events such as floods, earthquakes. Its impact is to require equipment to be designed and built to standards such that there is a high likelihood of the equipment surviving and properly operating given such external events.

GDC 4: Environmental and Dynamic Effects of Design Bases Events

- SSCs *important to safety* shall be designed to:
  - accommodate normal operation, testing, postulated accidents, LOCAs.
  - appropriately protected from dynamic effects of missiles, pipe whip, fluid discharge.
  - conditions outside NPP.

U.S.NRC
United States Nuclear Regulatory Commission
Protecting People and the Environment

258

GDC 4 is a criteria that focuses on assuring that equipment be designed and built to assure proper functioning given design bases events. As an example: Historically, if a DBA LOCA were to occur and cause the unit to trip off line, the impact of the sudden loss of the unit is typically postulated to disrupt the electrical power supplies placing reliance on onsite power sources. This results in requirements for timing of re-establishing power supplies to emergency loads.

The criteria also deals with assuring the equipment is protected from the effects of pipe whip, and fluid discharge.

GDC 2, GDC 4 Conformance

- ***Technical Issues:***
  - DC Power (batteries, buses, switchboards, protective devices): relied upon for safety.
  - Need to be protected via *appropriate design* against seismic, fire, flood.
  - *Voltage surge from inductive loads.*

U.S.NRC
United States Nuclear Regulatory Commission
Protecting People and the Environment

259

The typical technical issues these GDCs deal with are related to design standards used for SSCs.

GDC 2, GDC 4 Conformance

- ***Resolution:***
  - DC system will conform to relevant IEEE design standards:
    - IEEE Std. 384-1974 (Physical Independence of EPS).
    - IEEE Std. 422-1986 (Design & Installation of Cable Systems).
    - IEEE Std. 485-1997 (Sizing Station Batteries).
    - IEEE Std. 741-1997 (Criteria for Protection of Class 1E EPS).
    - IEEE Std. 665-1995 (Generating Station Grounding).
    - IEEE Std. 946-1992 (DC Power System Design).
    - IEEE Std. 1050-1996 (I&C Equipment Grounding).
  - IEEE design standards – *actually invoke other standards.*
  - *Voltage surge protection* via: commitment to install metal oxide varistor surge arrestors on *battery charger terminals.*

U.S.NRC
United States Nuclear Regulatory Commission
Protecting People and the Environment

260

The generally accepted means of addressing these concerns is via commitments to build equipment to accepted IEEE standards. The following were specifically cited in the DCD Tier 2 documentation and subsequently utilized by the NRC staff as the bases for accepting the AP1000 electric power system design.

I have listed the top-level standards only. Please note that standards often invoke other IEEE, NEMA, NFPA standards to clarify how specific SSCs should be designed. A good example is IEEE Std 384-1974 which requires power cables to meet IEEE Std 383 with exposed raceways to us non-combustible material that meets ASTM E 136-79 and many others. IEEE Std 420 is then invoked top describe wiring once inside cabinets – and so forth.

The subject of voltage surge protection emerge in the NRC staff review and a commitment to install such identified in the SER.

GDC 17: Electric Power Systems (EPS)

- Onsite/offsite EPS shall be provided to support SSCs which cool core, prevent fuel damage, maintain containment integrity.
- Onsite power including - DC and AC: *independent*, *redundant, testable, single failure tolerant*.
- Offsite power to switchyard supplied by *two physically independent circuits*.
- *One circuit available within seconds* following DBA LOCA.

U.S.NRC
United States Nuclear Regulatory Commission
Protecting People and the Environment

261

GDC 17 Conformance

- Offsite grid design is *COL item.*
- Offsite-Onsite AC Interface requirements for 2 offsite AC circuits – *Exemption Request*.
- Grid stability, RCP coastdown are *COL items.*
- Onsite AC design, cable system design, protective features to trip RCPs conform with requirements.

U.S.NRC
United States Nuclear Regulatory Commission
Protecting People and the Environment

262

GDC 17 Conformance

- AP1000 sought, and was granted, partial exemption from GDC 17 requirements for 2 offsite AC power sources.
- *Bases:*
  - AP1000 design employs passive safeguards features relying upon DC actuation of gravity driven core and containment cooling for DBAs.
  - Passive safety features when actuated maintain core and containment cooling for 72 hours.
  - AP1000 PRA supports conclusion of low risk.

U.S.NRC
United States Nuclear Regulatory Commission
Protecting People and the Environment

263

A unique aspect of the AP1000 design and SER is the exemption from portions of GDC 17 related to the “Onsite AC Power.”

Westinghouse sought and was granted an exemption based on the following considerations.

GDC 18: Inspection, Test Capability

- Safety-related EPS shall be designed to *allow inspection and testing* of wiring, insulation, connection, switchboards …to assess continuity.
- Capability to *periodically test onsite power sources*, *relays, switches.*
- Under conditions as close to design as practical.
- *Full sequence of operation*, transfer of power between: NPP, offsite power system, onsite power system.

U.S.NRC
United States Nuclear Regulatory Commission
Protecting People and the Environment

264

GDC 18 deals with inspection and testing capability, and that testing programs, to the extent practical, mirror the conditions (timing, response) of the active components. Thus, if the design is to accomplish a fast transfer upon sensed conditions, a simulated fault should result in the fast transfer occurring within the times assumed in safety analysis.

GDC 18 Conformance

- ***Technical Issues:***
  - Class 1E DC and Uninterruptible Power supplies (only) require capability of testing, monitoring.
- ***Resolution:***
  - Class 1E DC is ungrounded. Ground fault does not cause immediate loss of DC.
  - Spare battery bank and chargers allow separate testing, battery recharging, charger/battery replacement on line.
  - Design conforms with GDC 18.

U.S.NRC
United States Nuclear Regulatory Commission
Protecting People and the Environment

265

GDC 50 – Containment Electrical Penetrations

Containment design, including *electrical penetrations* must accommodate DBA without exceeding design bases leak rate.

- ***Technical Issue:***
  - Could DBA cause electrical short circuit on power cable that could fail containment penetration?
- ***Resolution:***
  - Penetration designed per IEEE Std. 317 with backup circuit breaker protection per NRC Reg. Guide 1.63, Rev. 3.

U.S.NRC
United States Nuclear Regulatory Commission
Protecting People and the Environment

266

GDC 50 contains one element that is related to electric power system design criteria.

There are high (9600V) and medium/lower voltage (480V) electrical connections which pass through containment penetrations. If there were a postulated DBA it is conceivable that the DBA could induce a fault that could in turn lead to failure of a containment penetration and then containment release.

IEEE Std 317 Electrical Penetration

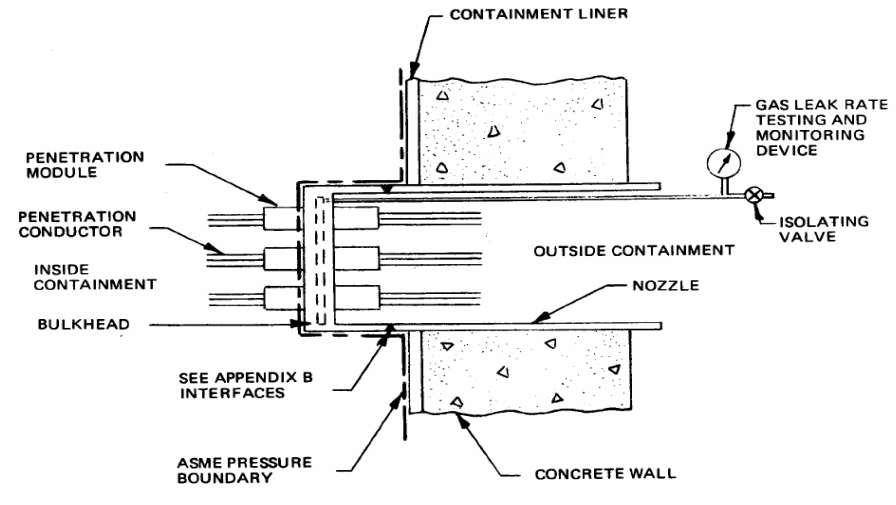

U.S.NRC
United States Nuclear Regulatory Commission
Protecting People and the Environment

267

This is an example of a containment penetration – which is welded to the containment liner. The concern with GDC 50 is an unprotected fault failing the penetration module.

COL Items

- Confirm offsite operating voltage to switchyard transformer and frequency decay rate (Item 8.2.3.1-1).
- Confirm switchyard protective breaker settings to preserve grid connection following turbine trip (Item 8.2.3.1-2).
- Grid stability analysis to confirm voltages to support 3.0 sec. window post-turbine trip RCP operation consistent with DCD Chapter 15 safety analysis (Item 8.2.3.1-3).
- Develop testing and inspection plan per GDC 18 for offsite AC Power system (Item 8.2.3.3-1).
- Develop preventive, corrective, predictive maintenance program for non-safety diesels (Item 8.3.1.2-1).
- Develop final grounding and lightning protection (Item 8.3.1.6-1).
- Develop periodic testing program for containment penetration protective breakers (Item 8.4.1-1).

U.S.NRC
United States Nuclear Regulatory Commission
Protecting People and the Environment

268

RTNSS Items

- AC power from diesel generators is credited to supply:
  - Power normal residual heat removal system (RNS) and its required support systems.
  - Provide means of power supply to post-accident monitoring.
  - AC power for Class 1E DC battery chargers.
- One ancillary diesel generator and fuel oil storage tank required to be available during all modes of plant operation:
  - After 72 hours ancillary diesel generators power MCR and I&C room ancillary fans, PCS recirculation pumps, and MCR lighting.

U.S.NRC
United States Nuclear Regulatory Commission
Protecting People and the Environment

269

SER Evaluation Findings

- Information on offsite/onsite requirements is sufficient and is acceptable.
- AP1000 design does not rely on offsite power for safety functions.
- NRC concluded *exemption to GDC 17 requirements* for two physically independent offsite circuits justified.
- NRC concluded applicant addressed major types of electric circuit protection systems.
- NRC concluded testing and inspection capability of system conforms with GDC 18.
- NRC concluded standby diesel generators capable of providing backup electrical power to onsite equipment needed to support decay heat removal operation during reduced reactor coolant system inventory and mid-loop operation.
- NRC concluded that ancillary diesel generators are acceptable as backup power sources for post-72 hours following a loss of all ac power sources.

U.S.NRC
United States Nuclear Regulatory Commission
Protecting People and the Environment

270

AP1000 Technical Specifications

Module 24
SER Section 16

INSTRUCTOR: Scott Newberry
October 2008

U.S.NRC
United States Nuclear Regulatory Commission
Protecting People and the Environment

271

Introduce self and topic in general.

Learning Objectives

- Class Participants are expected to understand:
  - NRC Requirements and policies for technical specifications.
  - Significant Issues identified during the NRC review of AP1000 TS.
  - Basis for accepting the AP1000 technical specifications.
  - Actions remaining for the COL applicants.

U.S.NRC
United States Nuclear Regulatory Commission
Protecting People and the Environment

272

I have listed the objectives of the presentation on this slide.

The first part of the presentation will go through the background—the NRC requirements and policy. This will include some information on the improvement programs that have been incorporated into technical specification programs.

We will review the process used by the NRC staff to review the AP1000 application—this process connects standards for current reactor designs to the review of the AP1000 that has different systems and a different safety philosophy-especially the role of non-safety systems.

I will conclude with the basis for acceptance of the technical specifications for the AP1000 and the future actions remaining for the COL applicant.

Fundamental to this presentation is the long history of regulation in the United States relating to the content of a license issued under 10CFR Part 50 and the role of technical specifications that are issued with that license. Much of this long back ground will not be covered here, but we would be pleased to answer questions following the presentation.

NRC Requirements

- 10 CFR 52.47(11) states that the application for design certification must include proposed technical specifications prepared in accordance with the requirements of §§ 50.36 and 50.36a.

- Key Parts of Technical Specifications - identified in 10 CFR 50.36:
  - Safety limits, limiting safety system settings, and limiting control settings.
  - **Limiting conditions for operation.**
  - Surveillance requirements.
  - Design features.
  - Administrative controls.

U.S.NRC
United States Nuclear Regulatory Commission
Protecting People and the Environment

273

1) **Just use the NOTES to go through this slide.**

2) This slide states the fundamental requirements for a design certification applicant.

3) It ties back to the requirements in Part 50 which I will review here.

4) The applicant must comply with 10CFR 50.36.

5) Read the second part of the slide then go through each of these definitions:

6) *Safety limits, limiting safety system settings, and limiting control settings:* Safety limits for nuclear reactors are limits upon important process variables that are found to be necessary to reasonably protect the integrity of certain of the physical barriers that guard against the uncontrolled release of radioactivity. Examples are reactor trip setpoints.
   - If any safety limit is exceeded, the reactor must be shut down. The licensee shall notify the Commission, review the matter, and record the results of the review, including the cause of the condition and the basis for corrective action taken to preclude recurrence. Operation must not be resumed until authorized by the Commission.

7) *Limiting conditions for operation* are the lowest functional capability or performance levels of equipment required for safe operation of the facility. When a limiting condition for operation of a nuclear reactor is not met, the licensee shall shut down the reactor or follow any remedial action permitted by the technical specifications until the condition can be met. Examples are: the number of atmospheric dump valves that must be operable during operation-if one is not operable for a certain time, the actions are listed in the specification.

8) *Surveillance requirements*. Surveillance requirements are requirements relating to test, calibration, or inspection to assure that the necessary quality of systems and components is maintained, that facility operation will be within safety limits, and that the limiting conditions for operation will be met. This is a challenging part of the AP1000 review because of the new passive and microprocessor based systems.

9) *The Design and Administrative controls* parts of the technical specifications support the other primary sections—I will not spend time on them in this presentation, but can answer questions if you have them.

Background

- 10 CFR 5036(c) (2)(ii) A technical specification limiting condition for operation of a nuclear reactor must be established for each item meeting one or more of the following criteria:
  - (A) *Criterion 1*. Installed instrumentation that is used to detect, and indicate in the control room, a significant abnormal degradation of the reactor coolant pressure boundary.
  - (B) *Criterion 2*. A process variable, design feature, or operating restriction that is an initial condition of a design basis accident or transient analysis that either assumes the failure of or presents a challenge to the integrity of a fission product barrier.
  - (C) *Criterion 3*. A structure, system, or component that is part of the primary success path and which functions or actuates to mitigate a design basis accident or transient that either assumes the failure of or presents a challenge to the integrity of a fission product barrier.
  - (D) *Criterion 4*. A structure, system, or component which operating experience or probabilistic risk assessment has shown to be significant to public health and safety.

U.S.NRC
United States Nuclear Regulatory Commission
Protecting People and the Environment

274

State that:
This slide quotes the criteria from 10CFR50.36 which determine what limiting conditions for operation must be in technical specifications. The application of these requirements is a primary element of the staff review and approval of the AP1000 technical specifications.

These criteria were developed a number of years ago as part of the NRC technical specification improvement program answering the question, “what should be the content of technical specifications?”

Go through the slide restating the importance of limiting conditions of operation as the fundamental assurance that the necessary complement of systems are in operation at all times. Read slowly through each criteria.

Before proceeding to explain how these criteria were applied for the AP1000, note that Criterion 4 leads to specific additions to technical specifications based on risk insights from the PRA.

NRC Review

- To review the AP1000 Proposed Technical Specifications, the NRC used a 3 step approach:
  - Comply with 50.36 Criteria previously discussed.
  - Model after the Standard Technical Specifications (Rev. 2 NUREG 1431-Westinghouse plants).
  - Preserve the validity of the plant design:
    - (1) within the required conditions bounded by the AP1000 DCD, and
    - (2) with operable equipment that is essential to prevent accidents and to mitigate the consequences of accidents postulated in the AP1000 DCD.
- **Assuring alignment with these 3 features for every STS, and for every AP1000 system and analysis, will provide a basis for accepting the technical specifications.**

U.S.NRC
United States Nuclear Regulatory Commission
Protecting People and the Environment

275

Use these notes:

On this slide are listed the 3 elements of the NRC staff review of the AP1000 application.

They must comply with the basic content of the technical specifications required by Part 50.

Standard Technical Specifications (STS) are published for each of the five reactor types as a NUREG-series publication. Plants are required to operate within these specifications. These STS models incorporate years of experience and improvement. NUREG 1431 aligns quite well with the AP1000 except for certain new areas which we will discuss. I will go through many but not all of the AP1000 features and how the were incorporated into the TS.

The third element of the review is a fundamental, step by step review, to assure that each element of the design and analysis are incorporated in the technical specifications.

AP1000 DCD

- Technical Specifications are located in DCD Tier 2 Ch 16.
- COL 16.2-1: Applicants must fill in bracketed items for specific values.

U.S.NRC
United States Nuclear Regulatory Commission
Protecting People and the Environment

276

Read through this note.

At this point, lets review what the applicant submits in accordance with Part 52.

They propose a complete set of technical specifications in Chapter 16, Tier 2 of the DCD.

Not to get ahead of ourselves, but the application will leave the details of the specifications to be included/confirmed by each COL applicant.

This set of applications is what the staff will review using their 2 step approach.

Review Results

- Differences with Standard Technical Specifications were identified:
  - Design differences.
  - Safety Approach (non-safety active systems).
  - Methods.
- Requests for additional information probing the rationale for proposed technical specifications.
- Use of risk assessment insights were identified.

U.S.NRC
United States Nuclear Regulatory Commission
Protecting People and the Environment

277

Read through this note:

A review of the NRC SER and RAIs indicates that the primary reason for the differences between the AP1000 technical specification and the standard specifications were design differences.

The NRC review, therefore, focused on whether these differences were justified and supportable: “preserved the validity of the design.”

The safety rationale—what was credited in the safety analysis-was also important. This relates directly to the criteria of 50.36.

The next part of the presentation provides a list of these differences, most of which were investigated by the staff during their review to assure that the Technical Specification operability requirements and associated surveillances were justified.

I will now go into the actual NRC review to illustrate some of the things the staff found and how they were resolved.

This is all documented very well in the NRC SER, Chapter 16, NUREG 1793.

NUREG 1431

- Standard Technical Specification experience is a critical element of staff review.
- Staff applied the rationale associated with LCO completion times and surveillance frequencies consistent with the STS provisions for equivalent AP1000 safety functions.

U.S.NRC
United States Nuclear Regulatory Commission
Protecting People and the Environment

278

Read this note:

I emphasize again, that although the applicant modeled the AP1000 TS after NUREG 1431 to a great extent, they proposed specifications applicable to the new passive features of the AP1000.

The essence of the staff review findings are the STS provisions and bases. Considerable investment has been made by the NRC and the nuclear industry to the STS program. NUREG 1431 reflects this experience. If one is interested in developing an understanding of the technical rationale for the TS, this is the most important reference. The organization of the LCOs, surveillances, the associated actions, and the bases are all located here. I do not plan on going back into the STS in this presentation.

The review is explained system by system in section 16.2 of the staff SER—comparing each AP1000 feature to the STS.

If the applicant want to depart form the STS justification must be provided.

Primary Differences In Technical Specifications

- Passive design features and system differences-PXS, ADS, CVS isolation, no PORVs, no RCP seal injection:
  - Detailed and focused element of staff review.
  - Surveillance must assure system operability and function.
  - Use of risk information to address system combinations and increased redundancy.
  - Similarities to STS utilized to maximum extent.
  - Westinghouse Letter December 12, **2003-special combinations of system inoperability and reduced AOTs (1 hour**).

U.S.NRC
United States Nuclear Regulatory Commission
Protecting People and the Environment

279

When the staff compared the AP1000 technical specifications to the Westinghouse standard specifications a number of differences were identified. The remainder of this presentation will go through many of these differences at some level to give you a sense of how the staff was able to make an acceptable resolution.

I can point out that there are many similarities of the AP1000 to the STS. Examples are Power Distribution and Reactivity Control Systems which are fundamentally the same as the AP1000. So the specs are virtually the same. Each of these sections do have minor differences because of system differences, like the AP1000 OPDMS (on-line power distribution monitoring system).

Now, going through the significant differences—certainly not all.

- Passive design features : The AP1000 TS generally rely on STS concepts for determining the allowed outage times (AOTs) and surveillance for these systems even though they are fundamentally different.
- System differences- such as the PXS,ADS, CVS isolation, the fact that the AP1000 has no PORVs and no RCP seal injection are each factored into the technical specification LCOs one by one.

The staff performed a detailed review of these passive systems, including RAIs and identifying OPEN items in their DSER. There is considerable discussion in 1793 (section 16.2.8) for every one, and more, of these items.

- For example the ADS system is incorporated with its emergency safety function into the technical specifications. A 72 hour completion time, which is consistent with the STS action time allowed for loss of redundancy in the STS was proposed and accepted by the staff. So too, are the surveillance frequencies similar to STS requirements. On this basis, the NRC concludes that the ADS specifications are available for assuring OPERABILITY of the ADS flow paths required by the associated LCOs.
- The Core Makeup Tank specifications are very similar to the STS.
- Two important differences, which might seem subtle, should be pointed out. They are;
  1. The safety function **that must be confirmed by the surveillance** is different (its not just the LCO that is reviewed)—this is carefully addressed by the staff and included in the AP1000 specs.
  2. Secondly, the AOTs for these systems are longer in some cases(8 hours vs. 1 hour) due to the increased redundancy in the design—see section 16.2.8 of the SER.

The policy for introducing credit for increased redundancy uses risk assessment approaches (NRC RG 1.177).

- **Special situations must be investigated (DVI line break) to assure the necessary complement of systems is available- I have highlighted this point because of its safety importance and emphasis in the review.**
- **The staff required Westinghouse to consider a full range of initiators since certain breaks can have a direct effect on the mitigation capability.**
- **The review identified certain situations requiring reduced allowed outage times**

Tech Spec Differences (cont.)

- Instrumentation systems are significantly different from STS functions:
  - Significant staff review and focus.
  - Microprocessor based system functions.
  - Surveillance Frequencies and out of service times are not provided for digital Instrumentation-bracketed and to be provided by COL applicant.
  - Use of non-safety systems vs. safety systems (ultimate heat sink, component cooling water, service water, auxiliary feedwater, AC electrical power).
  - New DAS ATWS system, a non-safety system:
    - Manual actuation meets criterion 4 of 50.36 and is in TS (based on PRA) while the DAS is non-safety and not in TS (in IPSAC controlled by COL).

U.S.NRC
United States Nuclear Regulatory Commission
Protecting People and the Environment

280

Read through the notes:

Microprocessor based functions are significantly different from STS functions.

Each is discussed in detail in Section 16.2.6 of the staff SER.

Using the basic guidance I described previously, the staff confirmed that every one of the fundamental functions—although different from their analog counterparts-- are incorporated properly, consistent with the STS approach, into the AP1000 technical specifications.

The staff requested Westinghouse to justify the surveillance frequencies using previously approved methods for analog systems (WCAP 10271). Westinghouse elected to make this a COL action . WCAP 10271 is a fundamental reference which uses reliability and risk techniques to estimate the change in system reliability for a range of surveillance intervals and allowed outage times. It was reviewed and approved by the staff, but is associated with analog systems.

The Safety Analysis rationale employed by Westinghouse for the AP1000 relies primarily on passive systems on DC power. As a result, typical STS Instruments (e.g. DGs and DG start is now non-safety), and their functional equivalents are not in the technical specifications but addressed by other regulatory programs. This is acceptable based on the criteria in 50.36 I addressed previously.

Last point on instrumentation:
The AP1000 employs the Diverse Actuation System (DAS) for ATWS mitigation. This system is NOT credited in Chapter 15 safety analysis. The manual actuation feature of this system is incorporated into the TS based on criterion 4 of 50.36 due to its risk significance. This is discussed in section 22 of the staff SER. The action statement for this Technical Specification is interesting and I point it out to you: If the manual capability is not available for 30 days, more frequent performance testing of the RTS and ESFAS is required. The staff review of this area is integrated with the review of the PRA. The action time is based on the role of DAS in the risk assessment. The action item, rather than focusing on DAS focuses on the front line of protection to assure its operability and reliability.

Tech Spec Differences (cont.)

- Passive Containment Cooling.
- Non-Safety Containment Spray.
- Non-safety Combustible Gas Control-PARs.
- Containment Sump Water pH control.
- Alternate Source Term.

U.S.NRC
United States Nuclear Regulatory Commission
Protecting People and the Environment

281

Additional differences can be pointed out.

Once again, the STS approach was used by the staff—comparing to the criteria in 50.36 to determine whether the feature will reside in the technical specifications and if so, what the content will be. This too was a fundamental aspect of the staff safety review and the focus of many RAIs.

These additional differences are noted on the slide:

The features of containment cooling (large annular storage tank which stores about 750,000 gallons of water—3 days of cooling), which are credited in the safety analysis, are in the tech specs consistent with approaches of the STS.

The containment spray system, although a feature of the design, does not meet the requirements of 50.36 and is not in the tech specs. It is provided for additional defense in depth and is regulated by licensee controlled programs.

Combustible gas control was reviewed in detail by the staff and was a source of requests for information. In the middle of the staff review of the AP1000, the NRC changed its requirements for Combustible Gas Control. These specifications were removed and approved by the staff based on the new 50.44 rule.

Control of ph is necessary to support the dose assumptions in the accident analysis for iodine. It decreases the radiolytic formation of elemental iodine and the formation of organic iodine and subsequent production of airborne iodine. Tech specs for the Granulated Trisodium Phosphate, located in baskets meet criteria 3 of 50.36 are included.

Since Westinghouse proposed the use of an Alternate Source Term methodology for their Safety Analysis—and this was approved by the staff-- a definition for XE 133, in addition to the definition of Dose Equivalent I-131 is added to Section 1.1 of the Technical specifications.. The basis for this change was reviewed in detail by the staff and references RG 1.183, “Alternative Radiological Source Terms for Evaluating Design Basis Accidents at Nuclear Power Reactors”. This methodology affects the doses calculated from DBA events like the steam generator tube rupture.

Tech Spec Differences (cont.)

- Shutdown Operations-additional operability requirements included. Conservative and improved relative to the STS.
- LBB leakage assumptions-use for main steam lines-new leakage specification is included.
- Different MSIV configuration (6 valves for each of 2 SGs).
- Auxiliary feedwater STS replaced by Startup Feedwater which is non-safety such that there is no TS required.
- DC power-better capability and longer completion times based on support of safety analysis.

U.S.NRC
United States Nuclear Regulatory Commission
Protecting People and the Environment

282

On this slide, I complete the discussion of differences between the AP1000 and the Westinghouse standard technical specifications.

Read the slide slowly since the information is included in each bullet.

Staff Conclusions (16.3)

- AP1000 Technical Specifications are consistent with the regulatory guidance in the Standard Technical Specifications.
- Design specific parameters and TS have been incorporated.
- AP1000 Technical Specifications meet the requirements of 10 CFR 50.36.

U.S.NRC
United States Nuclear Regulatory Commission
Protecting People and the Environment

283

To conclude: read the slide.

AP1000 Human Factors Engineering

Module 24
SER Section 18

INSTRUCTOR: Dr. John H. Bickel
October 2008

U.S.NRC
United States Nuclear Regulatory Commission
Protecting People and the Environment

284

In Module 24 we will cover the Human Factors Engineering Program documented in DCD Section 18.

Learning Objectives

- Understand high-level NRC Acceptance Criteria for Human Factors Engineering Program from NUREG-0711:
  - HFE Program Management
  - Operating Experience Review
  - Functional Requirements Analysis and Function Allocation
  - Task Analysis
  - Personnel Staffing and Qualifications
  - Human Reliability Analysis
  - Procedure Development
  - Training Program Development
  - Human-System Interface Design
  - Human Factors Verification and Validation
  - Design Implementation
  - Human Performance Monitoring
  - Minimum Inventory
- Understand where to find more in-depth information.

U.S.NRC
United States Nuclear Regulatory Commission
Protecting People and the Environment

285

After participating in this training participants should understand the importance and role of configuring and implementing a thorough Human Factors Engineering (HFE) program in the design and in testing and evaluation (verification) of a new or modified AP1000 power plant. The application of industry standard state-of-the-art, best practices, human factors engineering and ergonomics (HFEE), and human systems integration (HSI) principles in design will help ensure all human-operated systems and workstations can be operated simply, accurately, and safely, by the type and skill level of personnel anticipated to be employed to staff such systems both for performance of operations and for maintenance of all facilities and systems associated with the new power plant.

NRC Review Criteria on HFE

- Standard Review Plan (SRP) objectives are to confirm: AP1000 adequately considered role of HFE and means by which HFE will be accomplished.
- SRP verifies that:
  - AP1000 plans to oversee design and construction of nuclear facility in accordance with requirements of 10 CFR 50.34(f)(3)(vii).
  - AP1000 has HFE design team with responsibility, authority, placement within organization, and composition to ensure design commitments to HFE are achieved.

U.S.NRC
United States Nuclear Regulatory Commission
Protecting People and the Environment

286

Standard Review Plan (SRP) [NUREG-0800] acceptance criteria require that design will be critiqued when performing safety evaluations of license applications in a process evaluating: a) designs, b) design processes, c) design reviews, and d) operator actions.

The SRP acceptance criteria shall be in accordance with SRP Section 14.3, Inspections, Tests, Analyses, and Acceptance Criteria – Design Certification and 1.4.3.9 Human Factors Engineering.

SRP objectives are to confirm the applicant adequately considered the role of HFE and the means by which HFE will be accomplished. The SRP will verify that the applicant plans to oversee design and construction of the nuclear facility in accordance with requirements of 10 CFR 50.34(f)(3)(vii); and that the applicant has an HFE design team with responsibility, authority, placement within the organization and composition to ensure design commitment to HFE is achieved. Each of the 12 HFE topical areas outlined in the System/Content Summary (see above) has a set of generalizable criteria as outlined in the NRC Standard Review Plan (SRP).

To conserve verbiage here, only a few highlights for the twelve are mentioned here:

- The applicant's HFE *program management* should be evaluated in accord with review criteria of NUREG-0711: Human Factors Engineering Program Review Model.
- The *operating experience* review ensures the applicant retained positive design features of previous designs and has identified, analyzed and fixed and HFE related problems and issues.
- *Functional requirements* analysis is to identify and analyze functions to satisfy plant safety objectives.
- The applicant's *task analysis* identifies specific tasks needed for function accomplishment and their information, control and task-support requirements.
- *Staffing and qualifications* should be evaluated against review criteria of NUREG-0711 and satisfy requirements of 10 CFR 50.54 (i) through (m).
- *Human reliability analysis* is evaluation for potential for and mechanisms of human error that may affect plant safety. The review is to ensure the applicant has addressed human error mechanisms in design of the HFE aspects of the plant to minimize likelihood of personnel error.
- Human-system interface design is translation of function and task requirements into *HSI characteristics and functions* – applies to detailed design of alarms, displays, controls and other aspects of the HSI through systematic application of HFE principles and criteria.
- The applicant's *procedure development* program must incorporate HFE principles and criteria to develop procedures that are technically accurate, comprehensive, explicit, easy to use, validated, and in conformance with 10 CFR 50.34(f)(2)(ii).
- *Training program development* should include five activities: systematic analysis of tasks and jobs; develop learning objectives, design training based on learning objectives, evaluation of trainee mastery of the objectives, and evaluation and revision of training based on performance of trained personnel in the job setting.
- Human Factors *verification and validation* seeks to determine that designs conform to HFE design principles and enable plan personnel to successfully perform their tasks to achieve plant safety and operational goals.
- *Design implementation* verifies the applicant's built design conforms to the verified and validated design that resulted from the HFE design process.
- *Human performance monitoring* (HPM) assures the applicant's HPM strategy ensuring no significant safety degradation occurs due to changes made in the plant and to verify the conclusions are drawn from the evaluation and remain valid over the life of the plant (review criteria in NUREG-0711).

Human Factors Engineering Program Management

- NRC reviewed HFE program management to ensure it described adequate HFE program plan and identified qualified HFE design team to implement.
- HFE plan should describe technical program elements, ensuring all aspects of HSI developed, designed, and evaluated based on structured, top-down systems analysis using accepted HFE principles.
- NRC reviewed AP1000 HFE program management.
- DCD Tier 2 provides acceptable basis for HFE program plan.
- NRC found that AP1000 had completed NUREG-0711 element.
- COL applicant referencing AP1000 certified design is responsible for execution of NRC-approved HFE Program (COL Action 18.2.4-1).

U.S.NRC
United States Nuclear Regulatory Commission
Protecting People and the Environment

287

The staff concluded that the objective of the HFE program management review is to ensure that the applicant has described an adequate HFE program plan and identified a qualified HFE design team to implement the plan. The plan should describe the technical program elements, ensuring that all aspects of the HSI are developed, designed, and evaluated based on a structured, top-down systems analysis using accepted HFE principles. The staff reviewed the applicant's HFE program management at a complete element review level. Finished products developed by the applicant to complete the element are available for review. For the reasons set forth above, the DCD Tier 2 provides an acceptable basis for a human factors program plan. The staff found that the applicant had acceptably completed this NUREG-0711 element. The COL applicant referencing the AP1000 certified design is responsible for the execution of an NRC-approved HFE Program. This is COL Action Item 18.2.4-1.

Operating Experience Review

- NRC reviewed AP1000 OER to ensure that AP1000 identified and analyzed HFE-related problems and issues encountered in previous designs similar to AP1000 design.
- NRC reviewed AP1000 OER at complete element review level.
- Finished products submitted by AP1000 were available for review.
- NRC concluded AP1000 has discussed comprehensive OER approach.
- AP1000 completed fairly extensive reviews, both in general nuclear power experience area and in area of HSI.
- NRC concluded that AP1000 had acceptably completed this NUREG-0711 element.

U.S.NRC
United States Nuclear Regulatory Commission
Protecting People and the Environment

288

The staff's AP1000 OER review ensured that the applicant identified and analyzed HFE-related problems and issues encountered in previous designs that are similar to the current design under review. This will help to ensure that these problems and issues are not repeated in the development of the current design or, in the case of positive features, that they are included in the design. The staff reviewed the applicant's OER at a complete element review level. Finished products submitted by the applicant to complete the element were available for review. Overall, the applicant has discussed a comprehensive approach to OER. The applicant has also completed fairly extensive reviews, both in the general nuclear power experience area and in the particular area of HSI technology. Therefore, the staff concluded that the applicant had acceptably completed this NUREG-0711 element.

Functional Requirements Analysis and Function Allocation

- NRC reviewed AP1000 safety functional requirements, and allocations between *automatic actions* and *human actions* to assure these take advantage of human strengths and avoids allocating functions influenced by human limitations.
- AP1000 functional requirements analysis and function allocation analysis were reviewed at complete element review level.
- AP1000 discussed detailed analysis of functional requirements and allocation. These become a *Design Acceptance Criteria*.
- AP1000 identified process to further evaluate allocation, if necessary.
- NRC found that AP1000 had acceptably satisfied this NUREG-0711 element.

U.S.NRC
United States Nuclear Regulatory Commission
Protecting People and the Environment

289

The staff's review ensured that the applicant has defined the plant's safety functional requirements, and that the functional allocations take advantage of human strengths and avoid allocating functions that would be negatively influenced by human limitations. The functional requirements analysis and the function allocation analysis were reviewed at a complete element review level. The applicant discussed a detailed analysis of functional requirements and allocation, and has identified a process to further evaluate allocation, if necessary. Therefore, the staff found that the applicant had acceptably satisfied this NUREG-0711 element.

Task Analysis

- NRC reviewed AP1000 requirements of tasks plant personnel are required to perform.
- NRC reviewed AP1000 task analysis at implementation plan level of detail.
- Finished products obviously not available for review.
- Methodology for conducting complete task analysis was evaluated.
- COL applicant will use methodology to conduct HFE task analysis after design certification (COL Action 18.5.3-3).
- NRC concluded AP1000 task analysis implementation plan satisfies this element of NUREG-0711.

U.S.NRC
United States Nuclear Regulatory Commission
Protecting People and the Environment

290

The staff's task analysis review ensured that the applicant's task analysis identifies the requirements of the tasks that plant personnel are required to perform. The staff reviewed the applicant's task analysis at an implementation plan level of detail; finished products to complete the element were not available for review, but the methodology for conducting a complete task analysis was evaluated. The COL applicant will use this methodology to conduct a complete HFE task analysis after design certification. This is COL Action Item 18.5.3-3. The staff concluded that the applicant had acceptably developed a task analysis implementation plan to satisfy this element of NUREG-0711.

Staffing and Qualifications

- NRC reviewed that AP1000 analyzed requirements for *number and qualifications of personnel* using systematic manner demonstrating understanding of task requirements and applicable regulatory requirements.
- AP1000 identified staffing and qualifications as future COL action to be addressed by COL (COL Action 18.6.3-1).
- WCAP-14694 provides additional information related to this element available for COL.
- NRC concluded WCAP-14694 and DCD Tier 2 description related to staffing and qualifications activity were acceptable.

U.S.NRC
United States Nuclear Regulatory Commission
Protecting People and the Environment

291

The staff's review ensures that the applicant has analyzed the requirements for the number and qualifications of personnel in a systematic manner that demonstrates a thorough understanding of task requirements and applicable regulatory requirements.

The applicant identified staffing and qualifications as a COL action item with applicable issues to be addressed by the COL. This is COL Action Item 18.6.3-1. In addition, WCAP-14694 provides additional information related to this element and available for the COL. The staff concluded that WCAP-14694 and the description provided in DCD Tier 2 related to staffing and qualifications were applicable to the AP1000 with regard to performing this staffing and qualifications activity.

Human Reliability Analysis

- NRC reviewed HRA to assure:
  - HRA integrates HFE program activities and PRA activities.
  - AP1000 addresses human error mechanisms in design of plant Human Factors Engineering processes for:
    - Human-System Interfaces (HSIs),
    - Procedures,
    - Shift Staffing,
    - Training.
- NRC reviewed HRA integration at *plan level of detail.*
- NRC concluded: AP1000 *developed acceptable plan* for integrating HRA with HFE for AP1000 design.
- COL applicant referencing AP1000 certified design is responsible for carrying out and documenting final HRA/HFE integration implementation plan (COL Action 18.7.4-1).

U.S.NRC
United States Nuclear Regulatory Commission
Protecting People and the Environment

292

The staff's review ensured that (1) the HRA activity effectively integrates the HFE program activities and PRA/risk analysis activities, and (2) the applicant has addressed human error mechanisms in the design of the plant HFE (i.e., the HSIs, procedures, shift staffing, and training in order to minimize the likelihood of personnel error and to provide for error detection and recovery capability). The staff reviewed the HRA integration at an implementation plan level of detail.

The applicant developed an acceptable implementation plan for integrating the HRA with HFE for the AP1000 design. The COL applicant referencing the AP1000 certified design will be responsible for the execution and documentation of the HRA/HFE integration implementation plan. This is COL Action Item 18.7.4-1.

Human-System Interface Design Process

- NRC reviewed HSI at implementation plan level of detail.
- NRC reviewed process by which function, task requirements translated to displays and controls available to crew.
- NRC review of AP1000 HSI focused on process by which final design will be developed. These become a *Design Acceptance Criteria*.
- NRC concluded AP1000 provided acceptable HSI design implementation plan for AP1000 design.
- COL applicant referencing AP1000 certified design responsible for carrying out and documenting HSI design (COL Action 18.8.1.4-1).

U.S.NRC
United States Nuclear Regulatory Commission
Protecting People and the Environment

293

The staff's review evaluated the process by which HSI design requirements will be developed and HSI designs will be selected and refined. The staff reviewed HSI development at an implementation plan level of detail. The review addressed the process by which function and task requirements will be translated to the displays and controls that will be available to the crew. The applicant should have a process for systematically applying HFE principles and criteria, along with all other function, system, and task design requirements, to the identification of HSI requirements, the selection and design of HSIs, and the resolution of HFE/HSI design problems and issues. The applicant should document the process and rationale for the HSI design, including the results of trade-off studies, other types of analyses and evaluations, and the rationale for selection of design and evaluation tools.

The HSI design process presented in DCD Tier 2 has many positive features, including a systematic identification of information and control requirements, as well as the systematic testing of concepts and designs. This process includes developing functional requirements and functional specifications for key components of the HSI design. This is followed by the development of physical implementation documents that guide the detailed design of software and hardware.

The staff's review of the AP1000 HSI focused strongly on the process by which the final design will be developed. Details of the guidance documents and the process by which they will be completed were important considerations in this review because the full details of the actual HSI design will not be available before design certification.

The applicant has provided an acceptable HSI design implementation plan for the AP1000 design. The COL applicant referencing the AP1000 certified design is responsible for the execution and documentation of the HSI design implementation plan. This is COL Action Item 18.8.1.4-1.

Safety Parameter Display System

- NRC evaluated way in which SPDS functions will be provided in AP1000 control room.
- These become a *Design Acceptance Criteria*.
- NRC found that AP1000 had acceptably addressed all NUREG-0711criteria for SPDS.

U.S.NRC
United States Nuclear Regulatory Commission
Protecting People and the Environment

294

The staff's review evaluated the way in which the functions of the SPDS will be provided in the AP1000 control room. The staff has completed its review of the SPDS component of Element 7 of NUREG-0711. The staff found that the applicant had acceptably addressed all criteria for the SPDS.

Procedure Development

- NRC reviewed AP1000 procedure development programs that support and guide human interaction with plant systems.
- Human engineering principles and criteria should be applied along with other design requirements, to develop technically accurate, comprehensive, explicit, easy to use, and validated procedures.
- Procedure development is COL action item and will be addressed by COL applicant as part of post-design certification issues. (COL Action 18.9.3-1).

U.S.NRC
United States Nuclear Regulatory Commission
Protecting People and the Environment

295

The staff's review ensured that the applicant's procedure development program will result in procedures that support and guide human interaction with plant systems, as well as control plant-related events and activities. Human engineering principles and criteria should be applied along with all of the other design requirements, to develop procedures that are technically accurate, comprehensive, explicit, easy to use, and validated.

Procedure development is a COL action item and will be addressed by the COL applicant as part of the post-design certification issues. This is COL Action Item 18.9.3-1.

Training Program Development

- NRC reviewed AP1000 training program to ensure an approach for developing personnel training that:
  - Incorporates elements of systems approach to training.
  - Evaluates knowledge and skill requirements of personnel.
  - Coordinates training program development with other elements of HFE design process.
  - Implements training in effective manner consistent with human factors principles and practices.
  - Development of training program is COL action item to be addressed by COL applicant as part of post-design certification issues (COL Action 18.10.3-1).

U.S.NRC
United States Nuclear Regulatory Commission
Protecting People and the Environment

296

The staff's review of the applicant's training program ensured that the applicant established an approach for developing personnel training that incorporates the elements of a systems approach to training, evaluates the knowledge and skill requirements of personnel, coordinates training program development with the other elements of the HFE design process, and implements the training in an effective manner that is consistent with human factors principles and practices.

Development of a training program is a COL action item and will be addressed by the COL applicant as part of the post-design certification issues. This is COL Action Item 18.10.3-1.

Human Factors Verification and Validation

- NRC concluded V&V review was conducted at program plan level of detail, and was directed toward determining whether program plan addressed NUREG-0711 criteria at high level.
- NRC concluded V&V was acceptable at programmatic level.
- NRC expects V&V program to be developed in greater detail in implementation plan.
- COL applicant referencing AP1000 design has responsibility for developing, documenting, and executing implementation. plan for AP1000 HFE Program V&V (COL Action 18.11.4-1).

U.S.NRC
United States Nuclear Regulatory Commission
Protecting People and the Environment

297

The staff concluded that the V&V review was conducted at a program plan level of detail, and was directed toward determining whether the program plan addressed NUREG-0711 criteria at a high level. The V&V was judged acceptable at a programmatic level. The staff expects the V&V program to be developed in greater detail in the implementation plan. The COL applicant referencing the AP1000 certified design has the responsibility for developing, documenting, and executing the implementation plan for the V&V of the AP1000 HFE Program. This is COL Action Item 18.11.4-1.

Design Implementation

- NRC reviewed AP1000 process for implementation of plant changes to assure it considers effects on personnel performance.
- NRC review ensured that AP1000 design conforms to verified and validated design that resulted from HFE design process.
- These become a *Design Acceptance Criteria*.
- NRC concluded: AP1000 acceptably addressed this review element in *Human Factors Verification and Validation.*
- NRC concluded that DCD Tier 2 documentation addressed this NUREG-0711 criterion.

U.S.NRC
United States Nuclear Regulatory Commission
Protecting People and the Environment

298

The staff's review ensured that the applicant's implementation of plant changes considers the effects on personnel performance and provides the necessary support to ensure safe operations. In addition, it ensured that the applicant's design conforms to the verified and validated design that resulted from the HFE design process. The applicant acceptably addressed this review element as part of Element 10, "Human Factors Verification and Validation."

Based on this information, the staff found that DCD Tier 2 acceptably addressed this NUREG-0711 criterion.

Human Performance Monitoring

- NRC concluded this element of NUREG-0711 is responsibility of COL applicant.
- Performance monitoring strategy and program will be developed after design certification (COL Action 18.13-1).
- NRC found that DCD Tier 2 documentation addressed this NUREG-0711 criterion.

U.S.NRC
United States Nuclear Regulatory Commission
Protecting People and the Environment

299

The staff concluded that this element of NUREG-0711 is the responsibility of the COL applicant. The performance monitoring strategy and program will be developed after design certification. This is COL Action Item 18.13-1. Based on this information, the staff found that DCD Tier 2 acceptably addressed this NUREG-0711 criterion.

Minimum Inventory

- NRC concluded that AP1000 defined minimum inventory of Controls, Displays, Alarms (CDAs) for AP1000 design that satisfies NRC criteria.
- These become a *Design Acceptance Criteria*.

U.S.NRC
United States Nuclear Regulatory Commission
Protecting People and the Environment

300

The staff concluded that the applicant defined a minimum inventory of CDAs for the AP1000 design that satisfies the staff's criteria.

SER Evaluation Findings

- NRC concluded:
  - AP1000 Human Factors Engineering (HFE) documented in DCD Section 18, and other supporting materials describe comprehensive HFE Program that complies with applicable regulatory requirements.
  - AP1000 HFE is consistent with NRC review criteria.

U.S.NRC
United States Nuclear Regulatory Commission
Protecting People and the Environment

301

In conclusion, the staff concluded that the applicant's HFE DCD, as well as the other supporting materials reviewed describes a comprehensive HFE Program that complies with applicable regulatory requirements and is consistent with the staff's review criteria.

AP1000 Severe Accidents and Probabilistic Risk Assessment

Module 25
SER Section 19

INSTRUCTOR: Dr. John H. Bickel
October 2008

U.S.NRC
United States Nuclear Regulatory Commission
Protecting People and the Environment

302

Module 25 deals with the severe accident assessment and how it is to be applied in the future design efforts.

Learning Objectives

- Understand regulations, guidance documents associated with AP1000 PRA and intended future applications.
- Understand general conclusions of NRC review of AP1000 PRA.
- Understand role of AP1000 PRA in Design Reliability Program (DRAP) needed to assure risk profile is achieved.
- Understand review of Severe Accidents.
- Understand role of AP1000 PRA in defining COL Action Items needed to assure risk profile is achieved.
- Understand where to find more in-depth information.

U.S.NRC
United States Nuclear Regulatory Commission
Protecting People and the Environment

303

The objectives of this module are as follows:

- to understand that the AP1000 PRA was performed according to the requirements of NRC Regulation 10 CFR 52.47, and the guidance contained in a number of NRC policy statements, and SECY documents;
- to understand that NRC reviewed the AP1000 PRA, and after interactions with the Licensee reached ***conclusions on the reasonability of the findings and risk-insights***;
- to understand the current role which the AP1000 PRA is used in defining requirements for the ***Design Reliability Assurance Program (D-RAP)*** defined in DCD Tier 1 Section 3.7;
- understand review of Severe Accidents.
- to understand the role which the AP1000 PRA is used for in defining follow-up ***COL action items*** in the areas of:
  - Internal events PRA/HRA assumptions, external events screened out is PRA, internal flooding protection, severe accident mitigation, low power and shutdown modes risk prevention and mitigation, fire protection and seismic risk prevention and mitigation; and
- to understand where to find more in-depth information.

Why is PRA Required?

- Reviews of NRC regulatory process after March 1979 TMI accident revealed:
  - Reliance upon large number of deterministic regulations to assure safety.
  - Some regulations were overly proscriptive in focus.
  - Missed high likelihood scenarios predicted in 1975 WASH-1400 PRA.
    - Example: Large DBA LOCA focus in ECCS design missed fact that leaking PORV, operator confusion, could readily lead to extensive core damage.
- NRC 1985 *Severe Accident Policy Statement* recognized need for PRA to supplement existing 10 CFR 50 regulations.
- ALWRs envisioned to use passive safety features which were not proscriptively covered in existing regulations.
- 10 CFR 52.47 requires PRA for design certification review.

U.S.NRC
United States Nuclear Regulatory Commission
Protecting People and the Environment

304

The intent of this slide is to review the history of why a PRA submittal is required with the Design Certification application.

WASH-1400 in 1975 indicated that small LOCA through stuck open PORV, operator error in terminating HPI could lead to core melt with a probability that is much higher than DBA LOCA with failure Automatic ECCS systems.

The NRC's severe accident policy statement , along with the safety GOAL policy statement, started regulatory process changes involving use of PRA to supplement the NRC's deterministic regulatory processes.

The intent of design stage PRAs was to identify vulnerabilities and to fix them via design changes at the conceptual design stage rather than after the plant was built.

NRC Policy on ALWRs, Severe Accidents, and PRA

NRC defined following requirements for new designs:

- All 10 CFR 50.34 post-TMI issues fully addressed.
- Address all NUREG-0933 *Generic Safety Issues* with emphasis on: decay heat removal reliability, AC/DC power reliability.
- Complete PRA of new design to identify severe accident vulnerabilities and solutions.
- Use of cost-benefit analysis of Severe Accident Mitigation Alternatives (SAMA) to reduce severe accident vulnerabilities.
- Perform NRC design review based upon deterministic safety analysis supplemented by PRA.

U.S.NRC
United States Nuclear Regulatory Commission
Protecting People and the Environment

305

Intent of the Policy Statement was to lay out longer term plans for clarifying requirements of ALWRs regarding severe accidents.

Severe accident vulnerabilities would include:

- In-vessel steam explosion,
- Ex-vessel direct containment heating,
- Hydrogen burning,
- Core-concrete interactions.

Where PRA is Used

- Initial use is by designers to eliminate “outliers.”
- PRA used for defining reliability targets for equipment not yet designed.
- Results compared to SECY 90-016 ALWR Safety Goals:
  - CDF < 10^{-5}/reactor year.
  - LERF < 10^{-6}/reactor year.
- NRC reviews PRA to confirm reasonability of analysis and identification of systems, components that impact risk.

U.S.NRC
United States Nuclear Regulatory Commission
Protecting People and the Environment

306

This slide outlines where PRA is used.

An outlier is a sequence involving some combination of hardware failures and/or operator errors that leads to a substantial core melt/LER frequency contributor. For example, a single sequence contributing to 40% of estimated CDF would be an outlier. Reviews would be conducted to try and identify a technical fix to eliminate the outlier either by modifying the design or automating the action required by an operator, or improving information available to an operator to reduce the likelihood of human errors.

AP1000 is an NSSS design that must be matched up with a BOP design provided by the COL applicant. In many cases, the BOP support system features can have a major impact on risk levels. Therefore, reliability targets are established for things such as AC power and normal cooling water supplies that would impact the reliability of systems such as RHR.

The purpose of the 1986 safety goal policy statement was to challenge the industry and designers to come up with designs which dramatically reduced risk. An ALWR not meeting the 1986 NRC Safety Goals would probably not proceed to seek a license.

The NRC conducts a review of the PRA methods, data bases, and assumptions in order to determine if the plant has been properly analyzed and presents a correct picture of the actual risk profile.

Scope of AP1000 PRA

- Full Power Internal Event PRA (carried out to Level 3).
- Low Power and Shutdown Modes PRA.
- Seismic Margins Analysis.
- PRA Internal Flooding PRA.
- Fire PRA.
- Screening PRA of all other external events.

U.S.NRC
United States Nuclear Regulatory Commission
Protecting People and the Environment

307

This slide describes the scope of the AP1000 PRA. It is important to note that the DCD contains only a summary of the PRA results. The details are described in referenced topical reports.

It should be noted that at this stage of the design process not all features could be as thoroughly analyzed as would be possible in performing a PRA for an already operating NPP, which includes the following: seismic, fire, and internal flood.

All of these types of events were “bounded,” which means that slightly conservative assumptions were made. The overall PRA models were then quantified. Typically, none of the results were dominated by features impacting these models. For the few which surfaced in the PRA quantification, future action items were established to go back and re-evaluate them in the future.

Core Damage Frequency Results

Comparison of Core Damage Frequency Contributions by Initiating Event
(Internal Events and Power Operation)

Initiating Event	AP1000 (CDF/yr)	Operating PWRs (CDF range/yr) IPE results [NUREG-1560]
LOCAs (Total)	2.1E-7	1E-6 to 8E-5
— Large	4.5E-8	
— Spurious ADS Actuation	3.0E-8	
— Safety Injection Line Break	9.5E-8	
— Medium	1.6E-8	
— Small	1.8E-8	
— CMT Line Break	4.0E-9	
— RCS Leak	3.0E-9	
Steam Generator Tube Rupture	7.0E-9	9E-9 to 3E-5
Transients	8.0E-9	5E-7 to 3E-4
Loss of Offsite Power/Station Blackout	1.0E-9	1E-8 to 7E-5
Anticipated Transient Without Scram	5.0E-9	1E-8 to 4E-5
Interfacing System LOCA	5.0E-11	1E-9 to 8E-6
Vessel Rupture	1.0E-8	1E-7
Total	2.4E-7	4E-6 to 3E-4

U.S.NRC
United States Nuclear Regulatory Commission
Protecting People and the Environment

308

This slide shows the breakdown of CDF into the various major contributors. It is important to note that the overall CDF meets the NRC safety goal for CDF and significantly reduces total CDF from values currently found on operating NPPs.

Containment Release Results

Containment Release Categories and Associated Frequencies

Containment Release Category	Frequency	% of CDF	% of LRF
Intact Containment	2.2E-7	91.9	NA
Early Containment Failure	7.5E-9	3.1	38
Intermediate Containment Failure	1.9E-10	<0.1	1
Late Containment Failure	3.5E-13	<0.1	<0.1
Containment Isolation Failure	1.3E-9	0.6	7
Containment Bypass	1.1E-8	4.4	54
Total	2.4E-7	100	100

U.S.NRC
United States Nuclear Regulatory Commission
Protecting People and the Environment

309

This slide shows the results of the PRA Level 2 analysis.

The total release frequency is 1.9E-8/yr. I wish to highlight that based upon the use of the passive safeguards systems, and ability to arrest a portion of core damage sequences with the RPV, the majority 91.9 percent of the core damage sequences result in no containment failure and thus no significant release to the environment.

Comparison of CDF and LRF

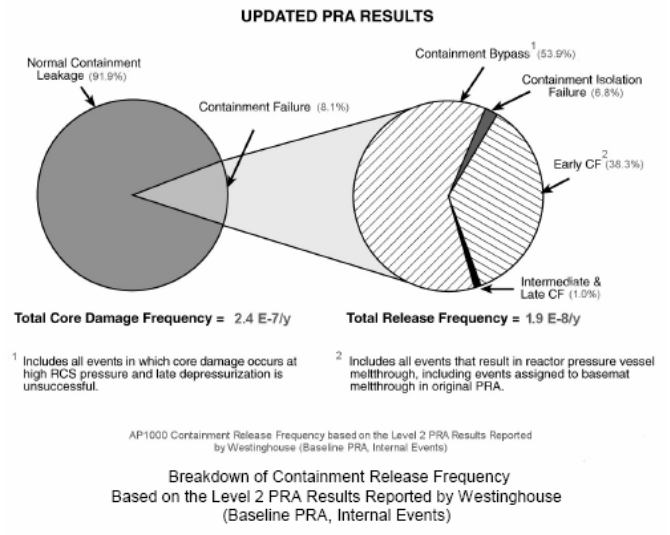

Breakdown of Containment Release Frequency
Based on the Level 2 PRA Results Reported by Westinghouse
(Baseline PRA, Internal Events)

U.S.NRC
United States Nuclear Regulatory Commission
Protecting People and the Environment

310

This slide provides a comparison of the core damage frequency and large release frequency.

It was noted previously that 91.9 percent of core damage sequences are projected to be retained in containment.

The remaining 8.1 percent are broken out as follows:

- containment bypass is 53.9 percent;
- early containment failure due to things such as energetic failure of the RPV (DCH, etc) is 38.3 percent;
- containment isolation failure is 6.8 percent and;
- intermediate and long term overpressure failures is 1 percent.

Containment Release Contributors

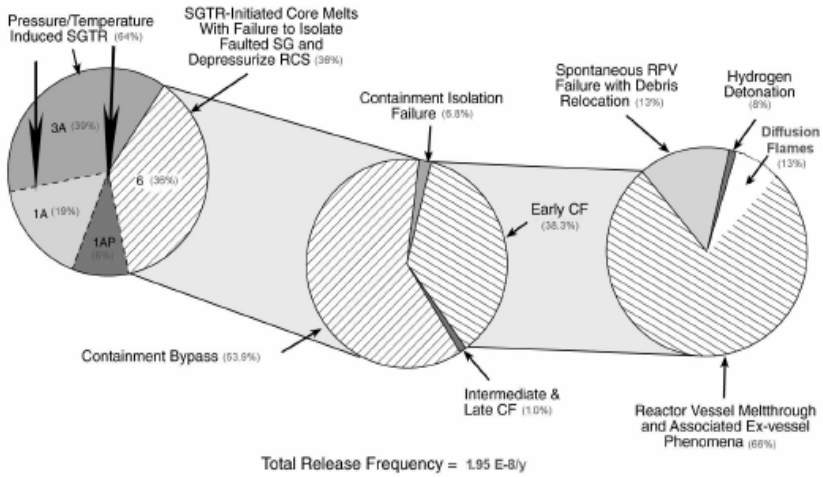

Total Release Frequency = 1.95 E-8/y

Breakdown of AP1000 Containment Release Modes by Contributor, as Reported by Westinghouse

U.S.NRC
United States Nuclear Regulatory Commission
Protecting People and the Environment

311

The previous slide showed that 53.9 percent of containment failure involved containment bypass scenarios. This slide shows the contributors to containment bypass failure.

The dominant contributors are failure scenarios involving SGTR with failure to depressurize and pressure/temperature induce creep failure of SG tubes.

Low AP1000 Risk Profile is Due to:

- Dramatically reducing dominant CDF sources in existing NPP designs via:
  - Less complicated, passive safeguards systems.
  - More reliance on “gravity” than active AC powered pumping systems.
  - Sizing of systems to provide longer times for operator intervention.
- Eliminating features which were risk outliers in existing NPP designs.
- Crediting reliability benefits of non-safety systems.
- These types of assumptions require follow-up confirmation as design is completed and BOP design established.

U.S.NRC
United States Nuclear Regulatory Commission
Protecting People and the Environment

312

The low risk profiles which have been obtained are due to a large number of assumptions which were made and which now require confirmatory actions to assure they are actually achieved.

The NRC systematically went through the AP1000 PRA and the DCD and identified specific items which require further confirmation.

These include confirming that the AS-BUILT design has all of the features credited for risk reduction. For example, assumptions are made that the RPV can be externally cooled by flooding up the reactor cavity. This of course assumes the RPV insulation is designed to allow a cooling path.

Features Credited to Reduce Risk

- Passive core and containment cooling rely on gravity, stored energy for core and containment cooling for 72 hrs without replenishment.
- Reliable DC power with 72-hr station AC blackout coping capability.
- Passive RHR (PRHR).
- Automatic Depressurization System (ADS) for core heat removal at low pressures, mitigating the radiological release effects of SGTR events, and mitigating severe accidents by reducing probability of reactor vessel breach and hot leg creep failure.

U.S.NRC
United States Nuclear Regulatory Commission
Protecting People and the Environment

313

The AP1000 reactor concept is an advanced passive reactor concept which incorporates a number of new safety features, which are noted in FSER Section 19.1.2, to reduce the frequency of core damage and large early release. These include the following:

- passive core and containment cooling systems which rely on gravity and stored energy to provide core and containment cooling for up to 72 hours without replenishment;
- high reliable DC power system with 72-hour station blackout coping capability;
- passive RHR (PRHR);
- Automatic Depressurization System (ADS) is credited both for facilitating core heat removal at low pressures, mitigating the radiological release effects of SGTR events, and mitigating severe accidents by reducing probability of reactor vessel breach and hot leg creep failure;
- In-Containment Refueling Water Storage Tank (IRWST) which acts as a heat sink for both the PRHR and for the first three stages of the ADS;
- external reactor vessel cooling (capability to flood the reactor cavity in order to cool the reactor vessel and avoid vessel breach);
- reactor cavity design is designed to accommodate the loads associated with ex-vessel severe accident phenomenon and;
- non-safety distributed hydrogen igniter system can be powered by offsite power or via DC/AC inverters powered by non-Class 1E batteries.

It is also important to note the following:

- ***non-safety containment spray (not credited in the Level 2/3 PRA) and;***
- ***containment vent (not credited in the PRA).***

Features Credited to Reduce Risk

- In-Containment Refueling Water Storage Tank (IRWST) acts as heat sink for both PRHR and first three stages of the ADS.
- External reactor vessel cooling (capability to flood reactor cavity to cool reactor vessel and avoid vessel breach).
- Reactor cavity design designed to accommodate loads associated with ex-vessel severe accident phenomenon.
- Non-safety distributed hydrogen igniter system can be powered by offsite power or by DC/AC inverters powered by non-Class 1E batteries.

U.S.NRC
United States Nuclear Regulatory Commission
Protecting People and the Environment

314

Design Reliability Assurance Program

- DCD Tier 1 Section 3.7 describes Design Reliability Assurance Program *(DRAP).*
- DRAP is based on maintaining final design reliability of key components within envelope assumed in the AP1000 PRA.
- *Table 3.7-1* of the DCD Tier 1 documentation identifies specific "Risk-Significant Components" credited with maintaining low risk profile for AP1000.
- Inspections, Tests, Assumptions, Acceptance Criteria (ITAACs) are identified related to final design reliability.

U.S.NRC
United States Nuclear Regulatory Commission
Protecting People and the Environment

315

None.

Regulatory Treatment of Non-Safety Systems

AP1000 PRA identified non-safety systems that contribute to maintaining low risk profile:

- DAS manual reactor trip.
- DAS manual PRHR and IRWST gutter valve control.
- DAS manual CMT isolation valve control.
- DAS manual ADS stage 1,2,3, and 4 actuation.
- DAS manual IRWST injection isolation valve operation.
- DAS manual containment recirculation isolation valve control.
- DAS manual PCS water drain valve operation.
- DAS manual CIV operation.

U.S.NRC
United States Nuclear Regulatory Commission
Protecting People and the Environment

316

The AP1000 PRA analysis was used to support identification of non-safety systems which are risk-important and these are discussed in individual DCD system sections. FSER ***Section 19.1.7*** identifies the following systems/functions as subject to the RTNSS process controls.

Regulatory Treatment of Non-Safety Systems

AP1000 PRA identified non-safety systems that contribute to maintaining low risk profile:

- Normal Residual Heat Removal System (RNS).
- Service Water System (SWS).
- Component Cooling Water system (CCS).
- Onsite AC power.
- Reactor trip circuit breakers.
- ESF actuation logic (including embedded software).
- Passive system check valves.
- Explosive squib valves.
- Reactor vessel thermal insulation system.

U.S.NRC
United States Nuclear Regulatory Commission
Protecting People and the Environment

317

Severe Accident Review

- Commission Policy and Guidance Documents discussed in NUREG 1793 Section 19.
- Summary of Commission expectations:
  - New reactors (AP1000) are expected to meet a higher safety standard for severe accident performance.
  - Designers and vendors expected to strive to meet severe accident goals.
  - Existing regulations and the defense in depth philosophy provide a safe design.
  - Consideration of Severe Accidents provides a robust design that meets Commission policy and enhances defense in depth.

U.S.NRC
United States Nuclear Regulatory Commission
Protecting People and the Environment

318

Read the slide.

Considerable guidance development and time lead to the positions applicable to the AP1000.

Many references: SECY 90 016, SECY 93 087 and a number of papers and Commission requirement memoranda address severe accidents overall and the particular issues that were considered (e.g., fire, seismic). Also important are SECY-96-128, SECY-97-044 and the corresponding SRMs dated July 21, 1993, and January 15 and June 30, 1997, respectively. **They are all discussed in Section 19.2 of the staff SER**

The Commission has stated that the existing regulations provide a safe design.

The following slides summarize the AP1000 features that were reviewed by the NRC to ensure that the Commissions policy expectations were met.

Severe Accident Review

- Mitigating features for the AP1000 include:
  - hydrogen control.
  - core debris coolability.
  - high-pressure core melt ejection.
  - containment performance.
  - dedicated containment vent penetration.
  - equipment survivability.
  - containment bypass potential resulting from steam generator tube ruptures (SGTRs).
  - enhanced ATWS and SBO capability.
  - Interfacing systems LOCA protection.
- These types of features were considered by the staff and the Commission arriving at final policy decisions for the AP1000.

U.S.NRC
United States Nuclear Regulatory Commission
Protecting People and the Environment

319

SECY-93-087 addresses the following mitigating features relating to the AP1000:

- hydrogen control
- core debris coolability
- high-pressure core melt ejection
- containment performance
- dedicated containment vent penetration
- equipment survivability
- containment bypass potential resulting from steam generator tube ruptures (SGTRs)

The Commission approved some of the staff positions stated in SECY-93-087 and provided additional guidance regarding others in an SRM dated July 21, 1993.

The following slide lists the primary features and results of the Westinghouse proposals and the completed staff review

Severe Accident Review

- Robust review of severe accident sequences, phenomena, and progression, including independent analysis, was performed by the staff.
- AP1000 severe accident capability:
  - Hydrogen igniters
  - Reactor cavity flooding capability
  - Reactor Vessel Insulation and Cooling
  - Depressurization of RCS
  - Containment bypass enhancements
  - Containment Performance
  - Equipment Survivability
  - Containment Spray Capability
  - Severe Accident Management
- Staff concludes that each of the severe accident issues and policies are acceptably met.

U.S.NRC
United States Nuclear Regulatory Commission
Protecting People and the Environment

320

This slide summarizes the NRC severe accident review discussed in Section 19.2 of its SER.

Each of the sequences, phenomena and uncertainties are described in the SER. We do not intend to go through them in this presentation.

Section 19 of the DCD, especially section 19.59.4.2, outlines the Severe Accident features of the AP1000 reviewed by the staff.

Examples of the robust features are:

- The AP1000 includes 64 igniters.
- It has the capability to depressurize reducing the vulnerability to high pressure core melt scenarios.
- Piping connected to the RCS is designed to higher pressures, reducing substantially the likelihood of an interfacing systems LOCA.
- A containment spray capability, although non-safety, is provided for defense in depth.

Potential Design improvements were also considered by Westinghouse and reviewed by the staff—see 19.4 of the SER.

Let us transition into the many requirements for the COL applicant related to the PRA and Severe Accidents.

COL Items

- Internal events PRA/HRA assumptions:
  - Revise PRA to account for site-specific information, as-built (plant specific) information refinements, technical specifications, plant-specific emergency operating procedures, and design changes (COL Item 19.1.1.1-1).
  - COL holder will update failure rates and human errors in PRA and incorporate them in quality assurance and maintenance rule programs (COL Item 19.1.1.1-2).
  - Risk-important operator tasks be taken into account in control room design and developing procedures and training programs. COL applicant should take this into account in developing and implementing procedures, training, and other human-reliability related programs (COL Item 19.1.3.1.4-1).
  - In AP1000 control room design, it is important that no new significant human errors be introduced. During main control room validation process, COL applicant should confirm that findings from integrated system validation do not lead to risk-significant increase in error potential over that in AP1000 PRA human reliability analysis (COL Item 19.1.3.1.4-2).

U.S.NRC
United States Nuclear Regulatory Commission
Protecting People and the Environment

321

The AP1000 PRA was the source of a very large number of COL interface items. The FSER identifies the following COL interface items that are listed on the following slides.

COL Items

- Severe accident mitigation:
  - COL applicant will complete design of reactor vessel insulation, consistent with external vessel cooling assumptions in severe accident analysis (COL Item 19.2.3.3.1.3.2-1).
  - COL applicant referencing AP1000 design will perform thermal response assessment of as-built equipment (instruments) used to mitigate severe accidents to provide assurance this equipment can perform its severe accident functions during environmental conditions resulting from hydrogen burns (COL Item 19.2.3.3.7.3-1).
  - COL applicant will develop and implement severe accident management guidance for use of non-safety containment spray and will identify specific penetrations to be used for containment venting, using framework provided in WCAP-13914 (COL Item 9.2.5-1).

U.S.NRC
United States Nuclear Regulatory Commission
Protecting People and the Environment

322

None.

COL Items

- Fire:
  - COL applicant shall update fire PRA for design details: cable routing, door, equipment locations, fire detection, suppression (COL Item 19.1.5.2.1-1).
  - COL applicant will establish administrative controls to maintain performance of fire protection system (COL Item 9.5.1-1(c)).
  - COL applicant's shall implement fire barrier and maintenance requirements (COL Item 9.5.1-1(f)).
  - COL applicant shall develop procedures to address fire watch for fire areas breached during maintenance activities (COL Item 19.5.1-3).
  - COL applicant shall develop procedures for implementing fire-specific operator actions (COL Item 19.5.1-4).
  - COL applicant will control transient combustibles during shutdown operation with ongoing maintenance activities (COL Item 19.1.8.1-5).

U.S.NRC
United States Nuclear Regulatory Commission
Protecting People and the Environment

323

None.

COL Items

- Seismic:
  - Check of seismic capacity of as-built SSCs to meet assumed HCLPFs in AP1000 PRA will be provided by seismic walkdown (COL Item 19A.2-1).
  - Fragility of valve rooms where PXS valves are concentrated is important factor of as-built SSCs to meet the HCLPFs assumed in AP1000 to withstand earthquakes. A check of capacity of as-built SSCs to meet assumed HCLPFs in AP1000 PRA will be provided by seismic walkdown (COL Item 19A.2-2).

U.S.NRC
United States Nuclear Regulatory Commission
Protecting People and the Environment

324

None.

COL Items

- Internal flooding PRA:
  - COL applicant should update internal flood PRA taking into account design details (e.g., pipe routing, door locations, and flood barriers) to search for internal flooding vulnerabilities (COL Item 19.1.5.3-1).
  - When fire door or fire barrier penetration must be open to allow specific maintenance (e.g., during plant shutdown), COL applicant will take appropriate compensatory measures to minimize risk (COL Item 19.1.8.1-2).
  - AP1000 design provides fire detection and suppression capability. Design also provides flooding control features and sump level indication. COL applicant expected to take compensatory measures to maintain adequate detection and suppression capability during maintenance activities. (COL Item 19.1.8.1-3).
  - COL applicant will implement maintenance guidelines described in WCAP-14837 Rev. 3 (AP600 Shutdown Evaluation Report) (COL Item 19.1.8.1-4).

U.S.NRC
United States Nuclear Regulatory Commission
Protecting People and the Environment

325

None.

COL Items

- External events screened out in PRA:
  - COL applicant shall perform site-specific, PRA-based analysis of external flooding, hurricanes, or other external events pertinent to site to reveal any site-specific vulnerabilities (COL Item 19.1.5-1).
  - COL applicant will update AP1000 PRA including fire, flooding analyses for both power and shutdown operation. Using final design information and site specific information, COL applicant will reevaluate qualitative screening of external events. Updated PRA will include any site specific susceptibilities found and applicable external events (COL Item 19.1.8.1-1).

U.S.NRC
United States Nuclear Regulatory Commission
Protecting People and the Environment

326

None.

COL Items

- Low power and shutdown modes:
  - COL applicant shall develop procedures and training to close containment hatches and penetrations given accident in Modes 5/6 operation (COL Item 19.1.8.3-1).
  - COL applicant shall have procedures to maximize availability of non-safety-related wide range PZR level indication during RCS drainage operations during cold shutdown, with Operators trained to identify inconsistencies in safety-related hot leg level instrumentation to prevent over-draining (COL Item 19.1.8.7-1).
  - COL applicant shall have policies to maximize availability of valve RNS V-023 (alternate gravity injection path) and have policies/procedures to maximize availability of valve to open during cold shutdown and refueling operations when RCS is open and PRHR cannot be used for core cooling (COL Item 19.1.8.16-1).
  - Inadvertent opening of valve RNS V-024 results in drain-down of RCS inventory to IRWST and requires gravity injection from IRWST. COL applicant will have administrative controls to ensure inadvertent opening of this valve is unlikely (COL Item 19.1.8.16-2).
  - Control room design will consider inadvertent opening of valve RNS V-024 results in a drain-down of RCS (COL Item 19.1.8.16-3).

U.S.NRC
United States Nuclear Regulatory Commission
Protecting People and the Environment

327

None.

COL Items

- Low power and shutdown modes:
  - COL applicant will maintain response procedures for low hot leg level alarms (COL Item 19.1.8.16-4).
  - COL applicant will have procedures for normal and abnormal operations, emergency operations, refueling and outage planning, alarm response, maintenance, inspection, test and surveillance, and administrative controls (COL Item 19.3.2.1-1).
  - If freeze seals used, COL applicant must develop plant-specific guidelines to reduce potential for loss of RCS boundary and inventory when in use (COL Item 19.3.3-1).
  - COL applicant should address following issues: outage philosophy, separation of organizations responsible for scheduling and overseeing outages, control procedures, assuring adequate resources, assuring defense-in-depth during shutdown, assuring personnel are trained (COL Item 19.3.7-1).

U.S.NRC
United States Nuclear Regulatory Commission
Protecting People and the Environment

328

None.

SER Evaluation Findings

- NRC staff concluded in FSER Section 19.1.1.2 that:
  - Quality and completeness of AP1000 PRA are adequate for intended purposes, and that PRA satisfies requirements of 10 CFR 52.47 such as supporting design certification processes.
  - Applicant's approaches for both core damage and containment analyses are logical and sufficient to achieve desired goals of describing and quantifying potential scenarios and containment performance during severe accidents.
  - All open items reported in DSER were resolved satisfactorily.

U.S.NRC
United States Nuclear Regulatory Commission
Protecting People and the Environment

329

The requirements for submittal of a PRA as a part of a design certification application is defined in the NRC regulation 10 CFR 52.47. At the time the AP1000 PRA was submitted, there were not specific standards of acceptability on methods, models, and data typical of SRP sections dealing with hardware and systems design requirements. Instead, as noted in the FSER, the guidance on addressing severe accidents is contained in the following NRC policy statements and NRC issues policy recommendations in SECY papers:

NRC Policy Statements:

- NRC Policy Statement: "Severe Reactor Accidents Regarding Future Designs and Existing Plants," August 8, 1985.
- NRC Policy Statement: "Safety Goals for the Operations of Nuclear Power Plants," August 4, 1986.
- NRC Policy Statement: "Nuclear Power Plant Standardization," September 15, 1987.
- NRC Policy Statement: "The Use of Probabilistic Risk Assessment Methods in Nuclear Regulatory Activities," August 16, 1995.

NRC Issued Policy Recommendations in SECY Papers:

- SECY-90-016, "Evolutionary Light-Water Reactor (LWR) Certification Issues and Their Relationship to Current Regulatory Requirements," January 12, 1990, and corresponding SRM issued June 26, 1990.
- SECY-93-087, "Policy, Technical, and Licensing Issues Pertaining to Evolutionary and Advanced Light Water Reactor Designs," April 2, 1993, and corresponding SRM issued July 21, 1990.
- SECY-96-128, "Policy and Key Technical Issues Pertaining to the Westinghouse AP600 Standardized Passive Reactor Design," June 12, 1996, and corresponding SRM issued January 15, 1997.
- SECY-97-044, "Policy and Key Technical Issues Pertaining to the Westinghouse AP600 Standardized Passive Reactor Design," February 18,1997, and corresponding SRM issued June 30, 1997.

AP1000 Regulatory Treatment for Non-Safety Systems (RTNSS)

Module 26
SER Section 22

INSTRUCTOR: Scott Newberry
October 2008

U.S.NRC
United States Nuclear Regulatory Commission
Protecting People and the Environment

330

This presentation is linked to a number of others-PRA-Safety Analysis-Technical Specifications-and most of all to the overall certification for the AP1000.

The development of the regulatory framework for new reactors like the AP1000 created a challenge for the NRC and policy decisions were necessary.

It all relates to how to regulate non-safety systems that have an important safety role.

This presentation will explain the challenge and how it was resolved.

It is important to note that the resolution of this issue was necessary for the staff to make their certification finding for the AP1000.

Learning Objectives

- Class Participants are expected to understand:
  1) The purpose and rationale for Regulatory Treatment of Non-Safety Systems including the fact that the RTNSS component of certification is a significant element of the reasonable assurance finding.
  2) The significant development steps:
     - Commission Policy.
     - EPRI Utility Requirements Document.
     - Certified RTNSS Process and Criteria proposed by Westinghouse and approved by the NRC.
     - Regulatory Oversight alternatives found acceptable for RTNSS equipment.
     - Several illustrative examples for each of these Criteria.

U.S.NRC
United States Nuclear Regulatory Commission
Protecting People and the Environment

331

Read the slide.

I hope you will understand what the term RTNSS means and how it relates to the NRC safety review and regulatory finding.

The RTNSS Issue

- The AP1000 relies on passive safety related systems to perform the design basis safety related functions.
- The non-safety systems provide the first line of defense in reducing challenges to the safety systems but require adequate regulatory oversight <u>considering their contribution to safety and the uncertainties associated with this first of a kind passive design (low driving head).</u>
- RTNSS-Regulatory Treatment for Non-Safety Systems was the term identified for this issue.

U.S.NRC
United States Nuclear Regulatory Commission
Protecting People and the Environment

332

Read the Slide.

Conclude with: Summarizing, this was the situation:

1. A new approach to the regulatory basis for safety was being proposed.
2. New passive safety systems that provide the primary safety case for the AP1000 have uncertainties associated with their performance
3. The typical active systems with a different role - another layer of defense.
4. The Commission Policy to achieve a higher level of safety.

It was apparent to the industry and the NRC that:

- these systems needed to be identified in a structured way, and
- appropriate regulatory controls needed to be put into place for this non-safety equipment.

I will discuss these in the following slides.

Resolution Approach

- The ALWR Utility Requirements Document for passive plants issued by EPRI includes standards and an approach that apply to the design and safety philosophy of the AP1000.
- This issue was a significant policy issue for the NRC taking years to resolve preceding the certification of the AP1000. Numerous SECY papers describe the evolution of the issue culminating with the **Commission SRM dated June 30, 1994 that supported the staff proposal in SECY 94 084.**

U.S.NRC
United States Nuclear Regulatory Commission
Protecting People and the Environment

333

Read the slide.

I will now go through the major elements of this approach.

NRC Staff General Approach

- ALWR Utility Requirements Document.
- Determine reliability/availability mission for risk-significant equipment needed to meet regulatory requirements.
- Identify regulatory oversight mechanism.
- Designer imposes requirements commensurate with the risk significance.

U.S.NRC
United States Nuclear Regulatory Commission
Protecting People and the Environment

334

Read through the following notes which parallel the thoughts on the slide:

(1) The ALWR URD describes the process to be used by the designer to specify the reliability/availability (R/A) missions of risk-significant structures, systems, and components (SSCs) needed to meet regulatory requirements and to allow comparisons of these missions to NRC safety goals (I will talk about these goals a little more). **An R/A mission is the set of requirements related to the performance, reliability, and availability of an SSC function that adequately ensures the accomplishment of its task, as defined by the focused probabilistic risk assessment (PRA) or deterministic analysis.**

(2) The designer applies the process to the design to establish R/A missions for the risk-significant SSCs.

(3) If active systems are determined to be risk-significant, the NRC reviews the R/A missions to determine if they are adequate and whether the operational reliability assurance process or simple technical specifications (TSs) and limiting conditions for operation can provide reasonable assurance that the missions can be met during operation.

(4) If active systems are relied upon to meet the R/A missions, the designer imposes design requirements commensurate with the risk significance of those elements involved.

(5) The design certification rule does not explicitly state the R/A missions for risk-significant SSCs. Instead, the rule includes deterministic requirements for both safety-related and non-safety-related design features.

RTNSS Scope and Criteria

- Non-safety systems (SSC functions) for:
  - ATWS and Station Blackout.
  - Long Term Cooling (>72 hours).
  - Meeting Commission Safety Goals for core damage and large release.
  - Meeting Commission Containment performance goals.
  - Preventing adverse systems interactions.

U.S.NRC
United States Nuclear Regulatory Commission
Protecting People and the Environment

335

Read these notes which parallel the slide.

The NRC concluded that the RTNSS process applies broadly to those non-safety-related SSCs that perform risk significant functions, and therefore, are candidates for regulatory oversight. The RTNSS process uses the following five criteria to determine those SSC functions:

(1) SSC functions relied upon to meet deterministic NRC performance requirements such as Part 50.62 of Title 10 of the Code of Federal Regulations (10 CFR 50.62) for mitigating anticipated transients without scram (ATWS) and 10 CFR 50.63 for station blackout (SBO). These regulations were implemented based on risk considerations.
(2) SSC functions relied upon to ensure long-term safety (beyond 72 hours) and to address seismic events (SSCs providing safety<72 hours are safety related).
(3) SSC functions relied upon under power-operating and shutdown conditions to meet the Commission's safety goal guidelines of a core damage frequency (CDF) of less than1x10-4 each reactor year, and a large release frequency (LRF) of less than 1x10-6 each reactor year.
(4) SSC functions needed to meet the containment performance goal, including containment bypass, during severe accidents. This issue was discussed in detail in SECY-93-087. For the AP1000, this criterion for assessing containment performance is the degree to which the design comports with the Commission's probabilistic containment performance goal of 0.1 conditional containment failure probability (CCFP) when no credit is provided for the performance of the non-safety-related, defense-in-depth systems for which there will be no regulatory oversight. The CCFP is a containment performance measure that provides perspectives on the degree to which the design has achieved a balance between core damage prevention and core damage mitigation. CCFP was used in a qualitative manner to confirm that the AP1000 design, combined with the regulatory oversight for identified SSCs, has maintained an acceptable balance between core damage prevention and mitigation. However, it was not used as a criterion for establishing the availability requirements for non-safety-related, defense-in-depth systems.
(5) SSC functions relied upon to prevent significant adverse systems interactions.

Staff Review

- The RTNSS component of the staff review received significant focus and requests for additional information (RAI).
- Particular aspects probed included:
  - Description of each step, using the focused PRA, to determine RTNSS SSCs.
  - RTNSS QA oversight for manually actuated DAS (Diverse Actuation System).
  - System Interactions Study.

U.S.NRC
United States Nuclear Regulatory Commission
Protecting People and the Environment

336

Read the following that parallels the slide.

The RTNSS component of the staff review received significant focus and requests for additional information.

I have listed the type of issues pursued by the staff.

The methodology for performing the focused PRA and the Systems Interaction study are described in the staff SER as well as the issue of regulatory oversight.

The major point of this slide is that the staff required a structured and defined process that could be relied upon to define this set of equipment such that a defensible argument can be made that this level of defense in depth could be both:

- defined, and regulated with appropriate oversight.

This presentation does not go into the details of these methodologies but I will go through some examples to show the types of equipment and oversight the resulted from this review and provided the basis for the staff regulatory finding. Read the slide starting with---This slide describes the fundamental steps proposed by the industry that was ultimately approved by the staff.

References for this discussion are:

- Section 22 of the staff SER — there is an excellent discussion of each of these steps in more detail.
- WCAP-15985 Revision 2, “AP1000 Implementation of the Regulatory Treatment of Non-safety Systems Process dated August 2003.

RTNSS Resolution

- Based on a review of the applicant's PRA and focused PRA, the staff concluded that Westinghouse followed an adequate process to support identification of RTNSS equipment (WCAP 15985, Rev. 2).

U.S.NRC
United States Nuclear Regulatory Commission
Protecting People and the Environment

337

Read the slide.

As I indicated before, all of the references are listed in Chapter 22 of the NRC staff SER, NUREG 1793.

Lets go through some examples that illustrate the results of the process for the AP1000.

Diverse Actuation System Manual Actuation

- One system needed regulatory oversight to meet the 10-6 LRF safety goal: **manual diverse actuation system (DAS)** controls for the following functions:
  - reactor trip
  - passive residual heat removal system heat exchanger and in-containment refueling
  - water storage tank gutter valves (air operated)
  - core makeup tank isolation valves (air operated)
  - automatic depressurization system stages 1, 2, 3 valves (motor operated), and
  - stage 4valves (squib)
  - in-containment refueling water storage tank injection isolation valves (squib)
  - containment recirculation isolation valves (squib)
  - passive containment cooling system water drain valves (air and motor operated)
  - containment isolation valves (air operated)
  - hydrogen igniters
- Based on focused PRA sensitivity study.

U.S.NRC
United States Nuclear Regulatory Commission
Protecting People and the Environment

338

Read the slide.

Note that this also goes in Tech Specs because of 50.36 criterion 4.

Near the end of this presentation, I will mention the type of regulatory controls considered for these SSCs.

Safety Margin and Uncertainty

- The following non-safety SSCS were viewed to add margin to compensate for potential uncertainties:
  - **automatic DAS ATWS and engineered safety feature actuation** (provides margin for reactor trip breaker uncertainty, thermal-hydraulic analysis uncertainty, and protection and safety monitoring system software uncertainty).
  - **injection capability of the normal residual heat removal system and onsite power supplies** (provides margin for ADS/IRWST injection/containment recirculation valve reliability uncertainty and long-term cooling thermal-hydraulic uncertainty).
  - **hydrogen igniters** (provides margin for uncertainty in hydrogen burn consequences).

U.S.NRC
United States Nuclear Regulatory Commission
Protecting People and the Environment

339

First note that:

The focused PRA also included an uncertainty evaluation whose goal was to consider assumptions made in the PRA models of passive systems (e.g., failure rates of IRWST injection line check and squib valves) The SER states that margin is provided in the PRA by adding regulatory oversight on those non-safety related SSCs that have been identified as being able to improve the results of the PRA sensitivity studies for other sequences.

Read the slide next.

Initiators

- To consider the impact of non-safety SSCs on the initiating event frequency component of risk, a complete set of 11 categories of events were identified
- Three criteria were applied to these categories to identify significant SSCs:
  (1) Are non-safety-related SSCs considered in the calculation of the initiating event frequency?
  (2) Does the unavailability of the non-safety-related SSCs significantly affect the calculation of the initiating event frequency?
  (3) Does the initiating event significantly affect the CDF and the LRF for the PRA?
- Many secondary plant systems met these criteria.
- The staff determined licensee operational controls were sufficient for these systems. The details for this decision are outlined in the SER.

U.S.NRC
United States Nuclear Regulatory Commission
Protecting People and the Environment

340

Read through the slide.

Then, can add the following:

Although these secondary controls have a contribution to risk, they are systems that are continuously operating rather than being in the standby mode.

The staff noted that because RTNSS oversight is intended to ensure the reliability and availability of those systems that are normally in standby that it is not meaningful to consider additional regulatory oversight beyond the licensee's normal operational controls.

Backup: initiators included At-Power Initiating Events, main steam line stuck-open safety valve, reactor coolant system leak, loss-of-coolant accidents, secondary side breaks, transients, anticipated transient out scram, Shutdown Initiating Events, shutdown loss-of-coolant accident, shutdown loss of offsite power, shutdown loss of decay heat removal.

Low Power and Shutdown

- Certain non-safety SSCs were determined to be important for low power and shutdown operation:
  - **offsite power system.**
  - **main ac power system.**
  - **onsite standby (diesel) power system.**
  - **normal residual heat removal system.**
  - **component cooling water system.**
  - **service water system.**

U.S.NRC
United States Nuclear Regulatory Commission
Protecting People and the Environment

341

Read the slide.

These SSCs must be operable only during Modes 5 and 6. They are important in these modes for scenarios involving loss of offsite power and loss of decay heat removal, especially during reduced inventory operations.

Containment Performance Considerations

- **Reactor vessel insulation** - support in vessel retention.
- **One hydrogen igniter group.**

U.S.NRC
United States Nuclear Regulatory Commission
Protecting People and the Environment

342

WCAP 15985 provides an evaluation for meeting the containment performance goal for a core damage event described in SECY 93 087 - both deterministic and probabilistic.

The reactor vessel insulation is required to support in vessel retention and the igniter group for combustible gas control/to provide margin for hydrogen burn consequences.

ATWS and Station Blackout (SBO)

- None required for SBO since the AP1000 design meets the intent of this regulation for an extended loss of power.
- RTNSS controls are required for:
  - the diverse actuation system functions of reactor trip, turbine trip, and passive residual heat removal during power operation.
  - the non-class-1E dc power and uninterruptible power supply system, which provides power to the diverse actuation system.

U.S.NRC
United States Nuclear Regulatory Commission
Protecting People and the Environment

343

Read the slide.

This aspect is relatively straightforward. Both of the regulations were originated over 20 years ago for operating reactor facilities. The AP1000 does not rely on AC power, so this regulation doesn't really apply.

The ATWS features of the AP1000 provide back up functions to prevent and mitigate a failure to scram event.

Systems Interactions

- Evaluation of Adverse Systems Interactions consisting of 3 types:
  - Functional Interactions - interactions among the passive safety systems, and interactions between passive safety systems and active non-safety-related systems.
  - Human Commission Errors - interaction resulting from operator errors of commission.
  - Spatial Interactions - interactions that could occur as a result of equipment location in the plant.
- None were identified from the analysis.

U.S.NRC
United States Nuclear Regulatory Commission
Protecting People and the Environment

344

The systems interactions analysis was reviewed closely by the staff and the subject of requests for additional information. It is a robust and systematic analysis in WCAP 15992.

Read the slide.

A comment on the human commission errors - a broad look at credible opportunities for error was made. The PRA was used in the evaluation. Only one situation involving spent fuel pool cooling was identified as a potential issue and it was judged not to be significant, primarily because of the time available to recover from any error should it occur.

Long Term Cooling

- Long term cooling defined as “Post 72 hour actions.”
- Safety systems perform up to 72 hours.
- The systems are necessary out to approximately 7 days for support actions.

- Based on WCAP 15985 these systems are relied upon 72 hours after an accident:
  - core cooling, inventory and reactivity control
  - containment cooling and ultimate heat sink
  - main control room habitability
  - post-accident monitoring
  - spent fuel pool cooling

  As a result the SSCs that support these functions must the RTNSS criteria:

  - Electric power
  - Makeup water
  - Doors and fans for ventilation

U.S.NRC
United States Nuclear Regulatory Commission
Protecting People and the Environment

345

Read the slide.

Should there be questions:

- electrical power to supply the post-accident and spent fuel pool monitoring instrumentation provided by ancillary diesel generators that connect to safety-related electrical connections.

- makeup water to the passive containment cooling system water storage tank to maintain external containment cooling water flow and to the spent fuel pool to maintain spent fuel cooling provided by a passive containment cooling system recirculation pump powered by an ancillary diesel generator connected to a safety-related makeup connection.

- open doors and ancillary fans to ventilate and cool the MCR, the instrumentation and control rooms, and the dc equipment rooms.

Regulatory Oversight

- The last step is to assure adequate regulatory oversight.
- Each non-safety SSC is assigned to a type of oversight to provide the necessary assurance for SSC reliability/availability:
  - Technical Specifications
  - Short Term Availability Controls
  - D-RAP

U.S.NRC
United States Nuclear Regulatory Commission
Protecting People and the Environment

346

Read the slide.

Then state that:

The presentation has been focused primarily on how to determine the RTNSS equipment and illustrations of the results.

The last step is to determine the regulatory oversight mechanism for each type of equipment. I have listed the three fundamental types of oversight on this slide. Each is covered in other presentations so I won't address them here. I can summarize that each is applied commensurate with the significance of the SSC.

RTNSS - DCD

- The implementation of the controls over the RTNSS equipment will be the responsibility of the COL applicant.
- The controls are all described in the DEC Tier 2 information:
  - Design: Design Reliability Assurance Program (3.7, 17.4).
  - Operation: Investment Protection Short-Term Availability Controls (16.3).
- Inspections Tests and Acceptance Criteria (ITAAC) are provided for all RTNSS equipment in Tier 1.

U.S.NRC
United States Nuclear Regulatory Commission
Protecting People and the Environment

347

Read the slide.

These sections include the actual lists of RTNSS equipment.

3.7 includes the equipment in the DRAP.

Overall Staff Conclusion

The applicant followed an acceptable process for identifying RTNSS SSCs.

Acceptable processes were proposed for regulatory oversight.

Each COL applicant will need to develop procedures and processes consistent with these oversight programs.

U.S.NRC
United States Nuclear Regulatory Commission
Protecting People and the Environment

348

Read through the slide.

This slide wraps up the presentation.

AP1000 Generic Issues (Engineering)

Module 27
SER Section 20

INSTRUCTOR: Scott Newberry
October 2008

U.S.NRC
United States Nuclear Regulatory Commission
Protecting People and the Environment

349

This is a continuation of the GSI discussion from the first week.

Learning Objectives

- Class Participants are expected to understand:
  - NRC Design Certification Requirements for GSIs.
  - Content of Application for types of GSIs.
  - NRC review process.
  - Resolution of significant issues for the AP1000 including some examples.

U.S.NRC
United States Nuclear Regulatory Commission
Protecting People and the Environment

350

Read through each of the objectives.

The NRC SER Chapter 20 is a very good reference. NUREG 0933 is the primary reference for all of these issues. In some cases Commission SECY papers were needed to develop the policy on issues since resolution required a new regulatory approach or regulation.

This module focuses on engineering issues. The first week focused on systems issues. I will not go through all the details already covered last week.

NRC Requirements

- 10 CFR 52.47(a):
  - The application must contain a final safety analysis report (FSAR) that describes the facility, presents the design bases and the limits on its operation, and presents a safety analysis of the structures, systems, and components and of the facility as a whole, and must include the following information:

    (8) The information necessary to demonstrate compliance with any technically relevant portions of the Three Mile Island requirements set forth in 10 CFR 50.34(f), except paragraphs (f)(1)(xii), (f)(2)(ix), and (f)(3)(v).

    (21) Proposed technical resolutions of those Unresolved Safety Issues and medium- and high-priority generic safety issues which are identified in the version of NUREG–0933 current on the date up to 6 months before the docket date of the application and which are technically relevant to the design.

U.S.NRC
United States Nuclear Regulatory Commission
Protecting People and the Environment

351

Just state this - no need to read the slide since we went through this last week.

Recall that the DC applicant must submit resolutions to all generic issues including TMI requirements.

DCD Proposed Resolution

- An applicant has several options to resolve one of these issues:
  - Demonstrate resolution for the proposed design.
  - Demonstrate that the issue does not apply.
  - Require and action for the COL applicant.
- Most were resolved through the design although about 30% require COL action.

U.S.NRC
United States Nuclear Regulatory Commission
Protecting People and the Environment

352

I used this slide last week to describe the options that the DC applicant has.

The majority of the issues were resolved with justification by the applicant. These are shown in the table. This table can be used as a road map to the SER.

Issues Identified by the NRC

- Most issues were resolved through the AP1000 design:

– Not Applicable	35	13%
– Resolved Issues	241	87%
– RAI	7	3%
– Open Item	16	6%
– COL Action Items Issues	85	31%

- Several issues required staff investigation and request for additional information. (There were 23 of these issues. In this module we have listed those issues that relate to AP1000 Engineering issues.)

U.S.NRC
United States Nuclear Regulatory Commission
Protecting People and the Environment

353

Read through the summary points on the slide.

Lets look at some of the engineering issues.

Generic Issues - RAI/Open Item

- Ductility of Two-Way Slabs and Shells and Buckling Behavior of Steel Containments.
- Reactor Pressure Vessel Head Degradation and Reactor Coolant Pressure Boundary Integrity.
- Develop More Detailed Quality Assurance Criteria.
- Multiple Steam Generator Tube Leakage.
- Recontrol of criticality following small-break LOCAs.
- Stiff Pipe Clamps.
- Surveillance of Mechanical Scrubbers.

U.S.NRC
United States Nuclear Regulatory Commission
Protecting People and the Environment

354

These are the engineering issues described in the staff SER.

Walk through the slide, picking out a few issues—this is about 10 percent of the 276.

Many of their questions related to how the issues related to the unique characteristics of the design.

All of this information is documented in the NRC SER.

I will now go through examples of each of these, showing how Westinghouse resolved the issue. They are the issues shown in bold lettering on this viewgraph.

BL 2002-01 Reactor Pressure Vessel Head Degradation and Reactor Coolant Pressure Boundary Integrity

- Issue:
  - Boric Acid Corrosion and Programs to detect cracking.
- Resolution:
  - Improved Alloy 690 material.
  - Accessibility for Inspection.
  - Continuing staff study and monitoring of issue.

U.S.NRC
United States Nuclear Regulatory Commission
Protecting People and the Environment

355

Read slowly through these notes - they follow the points on the slide.

The staff SER states that:

This BL sought information needed to determine the adequacy of PWR plants' Boric Acid Corrosion Control (BACC) Programs. Experience with currently operating PWRs continues to show cracking of Alloy 600 components. Recent experience indicates that cracking has even occurred in welds or components not previously expected to crack based on the temperature of the weld or component and the time in service.

The staff believes that the use of Alloy 690 materials in the RCPB is a substantial improvement over the use of materials currently in wide use in the industry. However, data is not presently available to demonstrate that cracking in these welds and components will not occur over the projected 60-year lifetime of an AP1000 plant.

Bare metal visual inspection of these locations is highly effective in identifying locations where cracking occurs. Technical specification requirements prohibit through-wall leakage of the RCPB. Therefore, the staff requested that Westinghouse provide information describing the extent to which the insulation of all Alloy 600/690 components and welds in the RCPB (not just upper reactor vessel head penetrations) will readily facilitate bare metal visual inspection during refueling outage conditions. This was Open Item 20.7-1 in the DSER. In a letter dated May 21, 2003, Westinghouse indicated that all the components with Alloy 690 type materials are accessible for inspection. For example, insulation can be removed for visual inspection, if necessary. Because these components are accessible for inspection through removal of insulation and because redesign of insulation to facilitate more rapid inspection, if necessary in the future, is not a major modification, the staff concludes that Westinghouse's response is acceptable, and on this basis, Open Item 20.7-1 is resolved.

As noted in the BL, the staff is considering the need for additional regulatory actions to ensure that an effective program is in place to monitor potential cracking of these susceptible materials and ensure that the causes of cracking are appropriately addressed. If the staff develops new monitoring requirements, the staff will consider the need to backfit these requirements on operating reactors and certified designs, including the AP1000.

GL 85-06 Quality Assurance for ATWS Equipment

- Review identified inconsistencies in QA requirements.
- Westinghouse modified WCAP 15985 (RTNSS report) to confirm they meet all GL 85-06 requirements.

U.S.NRC
United States Nuclear Regulatory Commission
Protecting People and the Environment

356

Read through this information which follows the slide.

In comparing the information contained in the AP1000 DCD and WCAP-15985 (the Westinghouse report that addresses RTNSS), the staff noted that the QA controls specified for the ATWS mitigation equipment required by 10 CFR 50.62 appeared to be inconsistent.

Specifically, the WCAP-15985 does not specify quality assurance requirements for the non-Class 1Eand UPS systems, while the DCD indicates that these systems are subject to quality assurance guidance equivalent to GL 85-06. Therefore, the staff determined that the applicant should clearly state the QA requirements that are applicable to the DAS and non-Class 1E and UPS systems for the purposes of satisfying the requirements of GL 85-06.

This issue was identified as DSER Open Item 20.7-2. In August 2003, WCAP-15985, Revision 2, Westinghouse states in Section 10.3-1, “Instrumentation Systems,” that the QA guidance provided in GL 85-06 is applicable to DAS because of the ATWS mitigation functions (DCD Tier 2, Section 7.7.1.11).

Westinghouse also states in DCD Tier 2, Section 10.3.3, “Electrical Systems,” that the QA guidance provided in GL 85-06 is applicable to the non-Class IE, dc and UPS systems because of the ATWS mitigation functions (DCD Tier 2, Section 8.2.3.1.2). The NRC staff found that this adequately addresses QA requirements for DAS, the non-Class 1E, dc and UPS systems for the purposes of satisfying the requirements of GL 85-06.

Hydrogen Control for Large Dry PWR Containments GSI 121

- 10 CFR 50.44 revised after issuance of staff DSER.
- Eliminates need for hydrogen recombiners and hydrogen purge systems.
- The staff's evaluation of the ability of the AP1000 design to comply with the hydrogen control requirements of 10 CFR 50.44 are documented in Section 6.2.5.
- The AP1000 has been provided with a system for hydrogen control that meets the requirements of 10 CFR 50.44.

U.S.NRC
United States Nuclear Regulatory Commission
Protecting People and the Environment

357

Read through these notes which parallel the slide.

Subsequent to the publication of the NRC's DSER, the NRC revised its regulations regarding the control of combustible gas in containment. The revised regulations were published on September 16, 2003, and became effective on October 16, 2003. The NRC extensively revised 10 CFR 50.44, "Combustible Gas Control for Nuclear Power Reactors," made associated changes to Subsections 50.34 and 52.47, and added a new section, Subsection 50.46a, "Acceptance Criteria for Reactor Coolant System Venting Systems." The revisions apply to current power reactor licensees, and also consolidate combustible gas control regulations for future power reactor applicants and licensees. The revised rules eliminate the requirements for hydrogen recombiners and hydrogen purge systems, and relax the requirements for hydrogen and oxygen monitoring equipment to make them commensurate with their risk significance.

The ability of the AP1000 design to comply with the hydrogen control requirements of 10 CFR 50.44 is documented in DCD Tier 2, Section 6.2.4. The staff's evaluation of the ability of the AP1000 design to comply with the hydrogen control requirements of 10 CFR 50.44 are documented in Section 6.2.5

Concerning equipment survivability, Westinghouse addressed this issue in DCD Tier 2, Appendix 19D and in Appendix D to the AP1000 PRA, and the staff's evaluation is documented in Section 19.2.3.3.7. **The AP1000 has been provided with a system for hydrogen control that meets the requirements of 10 CFR 50.44** as evaluated in Sections 6.2.5 and 19.2.3.3.7 of this report. Therefore, Open Item 6.2.5-1 is closed and Issue 121 is resolved for the AP1000 design.

Resolved by an Action Item for COL Applicant

BL 87-01 - Thinning of Pipe Walls.

GL 92-01r1 - Reactor Vessel Structural Integrity.

GSI 135 - Steam Generator and Steam Line Overfill.

U.S.NRC
United States Nuclear Regulatory Commission
Protecting People and the Environment

358

On this slide I have listed three issues that were resolved through COL Action items.

BL 87-01 Thinning of Pipe Walls:
In WCAP-15800, Revision 3, the applicant indicated that this BL is not applicable to the AP1000 design certification because it is a surveillance issue, as discussed in DCD Tier 2, Sections 5.4.3.4 and 10.3.6. This BL requests that licensees submit information concerning their programs for monitoring the thickness of pipe walls in high-energy single-phase and two-phase carbon steel piping systems. It asks licensees to provide specific information concerning their programs for monitoring the wall thickness of pipes in condensate, feedwater, steam, and connected high-energy piping systems, including all safety-related and non-safety-related piping systems fabricated of carbon steel.

DCD Tier 2, Section 5.4.3.4,pertains to RCS piping which is fabricated from stainless steel and, therefore, is not addressed by BL 87-01. DCD Tier 2, Section 10.1.2, discusses steam and power conversion system piping design and pipe wall thickness inspections for erosion/corrosion protection.

DCD Tier 2, Section 10.1.3, indicates that the COL holder will address preparation of an erosion/corrosion monitoring program for carbon steel portions of the steam and power conversion systems that contain water or wet steam. **This is COL Action Item 10.5-1.**

GL 92-01r1 Reactor Vessel Structural Integrity
GL 92-01, Revision 1, Supplement 1, requests all licensees to review their RPV structural integrity assessments to identify, collect, and report any new data pertinent to the analysis of the structural integrity of their RPVs and to assess the impact of that data on their RPV integrity analyses. Similarly, the staff is requesting that applicants using the AP1000 design, as part of their actual plant submittal, provide the amount of copper, nickel, and phosphorus contents, the initial RTNDT value, the projected fluence at the end of the license period for the limiting material, and the method of calculating the fluence. This information will confirm that the proposed P/T limits are in accordance with 10 CFR Part 50, Appendix G, and that the beltline materials conform to the PTS criteria of 10 CFR 50.61. By letter dated November 7, 2003, Westinghouse indicated that the COL applicant will address verification of plant-specific beltline material properties consistent with DCD Tier 2, Section 5.3.3.1 concerning P/T limit curves; DCD Tier 2, Table 5.3-1 concerning the maximum limits for elements of the reactor vessel; and DCD Tier 2, Table 5.3-3 concerning end-of-life RTNDT and upper shelf energy projections. The verification will include a PTS evaluation and an upper shelf energy evaluation based on as-procured vessel material data and the projected neutron fluences for the plant design objective of 60-years. **The COL applicant will submit these evaluation reports for NRC staff review.** The PTS evaluation will include the copper, nickel, and phosphorus contents, the initial RTNDT value, the projected fluence at the end of the license period for the limiting material, and the method of calculating the fluence. The upper shelf energy evaluation will include the initial upper shelf energy and the projection of upper shelf energy to the end of life based on copper content and the projected fluence. Subsequent to the November 7, 2003, letter, Westinghouse added this COL commitment to DCD Tier 2, Section 5.3.6.4. The staff concluded that this commitment is responsive to the information the staff requested under GL 92-01, Revision 1, Supplement 1**. This is COL Action Item 20.7.4-7.**

Some Issues Were Not Applicable

- BL 80-18 - Masonry Wall Design.
- BL 88-02 - Rapidly Propagating Fatigue Cracks in Steam Generator Tubes.
- BL 82-02 - Degradation of Threaded Fasteners in the Reactor Coolant Pressure Boundary of PWR Plants.

U.S.NRC
United States Nuclear Regulatory Commission
Protecting People and the Environment

359

Read through the following which flows with the slide:

Chapter 20 of the NRC SER provides the basis for resolving each of the issues. Some issues were not applicable and these are clearly noted in the SER and are shown in the attached summary table.

Examples are:

<u>BL 80-18 Masonry Wall Design</u>
As stated in DCD Tier 2, Section 3.8.4.6.1.4, there are no safety related masonry walls used in the nuclear island. Also, in WCAP-15800, Revision 3, Westinghouse stated that this BL is not applicable to the AP1000 design because the design has no safety-related masonry walls. The staff agrees that the AP1000 has no safety-related masonry walls. **Based on this, this BL is not applicable to the AP1000 design**.

<u>BL 88-02 Rapidly Propagating fatigue cracks in steam generator tubes</u>
Westinghouse stated that this BL was not applicable to the AP1000 design because there are stainless steel support plates in the AP1000 SGs. The staff agrees with this assessment. See also Section 5.4.2.1 of the staff SER for additional information concerning AP1000 SGs. **Based on this, the staff concluded that this BL is not applicable to the AP1000 design.**

<u>BL 82-02 Degradation of Threaded Fasteners in the Reactor Coolant Pressure Boundary of PWR Plants</u>
Westinghouse stated in WCAP-15800, Revision 3, that this BL is not applicable to the AP1000 design. Also, DCD Tier 2, Section 5.2.3.5, specifically prohibits the use of lubricants containing molybdenum disulfide in the AP1000 design. **Based on this, the staff concluded that this BL is not applicable to the AP1000 design.**

Conclusion

- The NRC requires significant study and demonstration in the application regarding generic issues.
- Chapter 1 of the application and Chapter 20 of the SER document the resolution of these issues.
- Most issues were not applicable or resolved.
- About 30 issues need work by the COL applicant.
- We have provided some addition tables categorizing the type of resolution in your manual.

U.S.NRC
United States Nuclear Regulatory Commission
Protecting People and the Environment

360

Read through the slide.

The following are notes for the last generic issue reference two slides ago:

GSI 135 Steam Generator and Steam Line Overfill
Issue 135 was initiated in 1986 to integrate various SG programs and related issues, including water hammer, eddy current testing, and steamline overfill consequences. Overfill is defined as water entering the main steam line caused by excessive feedwater flow resulting from control system failure or an SGTR. This issue was expected to provide a better understanding of SG and secondary-side integrity, including the effects of water hammer on secondary system components and piping, as well as the resultant radiological consequences. Because the staff concluded that SGTR and steamline overfill events are relatively low risks, this issue was resolved and no new requirements were established. This position is documented in NUREG-0933 and NUREG/CR-4893, "Technical Findings Report for Generic Issue 135: SG and Steamline Overfill Issues," dated May 1991. A sub issue of Issue 135 is the improved eddy current testing of SG tubes. The staff deferred this subissue to the development of a revision to RG 1.83, "Inservice Inspection of Pressurized Water Reactor SG Tubes." In DCD Tier 2, Section 1.9.4.2.3, the applicant addressed Issue 135 and the four tasks that comprise it, as discussed in NUREG-0933.DCD Tier 2, Appendix 1A, which discusses the level of conformance with RG 1.83, states that the AP1000 design essentially conforms to the regulatory guidance except where state-of-the-art advances have enhanced ISI techniques. Specifically, as stated in DCD Tier 2, Section 5.4.2.5, the SGs permit access to the tubes for inspection, repair, and plugging in accordance with RG 1.83.
As discussed in Sections 5.2.4 and 5.4.2 of this report, the COL applicant is responsible for the development of the SG tube PSI and ISI programs. SG tube integrity is verified in accordance with this surveillance program, as discussed in DCD Tier 2, Section 5.4.15. The programs are plant-specific and are contained in Section 5.5.4, "Steam Generator (SG) Tube Surveillance Program," of the TS found in DCD Tier 2, Chapter 16, and found it to be acceptable, as discussed in Section 5.4.2.2 of this report.

Plant-specific changes made by a COL applicant to this surveillance program in the technical specifications will be reviewed by the staff individually for each license application referencing the AP1000 DC against the staff's regulatory criteria in place at the time of its review. As discussed in Issue A-3, this is designated as COL Action Item 20.3-1.

AP1000 Conclusions, Interfaces, and ACRS Review

Module 28
SER Sections 23 and 24

INSTRUCTOR: Scott Newberry
October 2008

U.S.NRC
United States Nuclear Regulatory Commission
Protecting People and the Environment

361

This is the last presentation.

Learning Objectives

- Class Participants are expected to understand:
  - The COL and interfaces that relate to the AP1000 DC.
  - The regulatory process to ensure safety prior to fuel load, including ITAAC closure.
  - The overall basis for NRC approval of the AP1000 design certification (including the report from the Advisory Committee on Reactor Safeguards).

U.S.NRC
United States Nuclear Regulatory Commission
Protecting People and the Environment

362

State the following which parallels the slide.

This is the last discussion before we wrap up and go through any questions that you might have.

Throughout this week you were exposed to interface and COL items. I will discuss these in more detail during this presentation.

I will go through the closure process that is required of the COL applicant as well as the NRC review and finding before fuel load.

Lastly, I will state the basis for certification by the NRC staff and make you aware of the comments made by the NRC's advisory committee on reactor safeguards.

Overview

- This module includes:
  - NUREG-1793 conclusion summary.
  - Interface information from the DCD.
  - Presentation material summarizing the COL/DC interface.
  - Process description of ITAAC closure up to commission approval for fuel load.
  - Review of comments made by the ACRS.

U.S.NRC
United States Nuclear Regulatory Commission
Protecting People and the Environment

363

Read through this slide.

COL Interfaces

- Tier 1 Inspections Tests Analysis and Acceptance Criteria – ITAAC.
- Design Acceptance Criteria – DAC.
- Other Tier 1 requirements including test program and DRAP.
- There are no Tier 1 safety related interfaces in the DCD or required by the staff.
- Significant COL Actions - Section 1.8 of the DCD and App F of SER.
  - Interface requirements for out of scope.
  - COL information items for site specific portion.

U.S.NRC
United States Nuclear Regulatory Commission
Protecting People and the Environment

364

Read through the following points which parallel the slide:

There are important requirements for the COL applicant in Tier 1 of the DCD. These include ITTAC and DAC, the initial test program and the Design Reliability Assurance Program. They would be expected to be implemented with out change since changing them is intended to be difficult

All interface requirements and COL items are Tier 2. This means that alternatives can be proposed by COL applicants for review. They must be reviewed and approved by the staff.

These interfaces are all summarized in section 1.8 of the DCD.

> Interface requirements are summarized in **Table 1.8-1.** They define the attributes and performance characteristics that the **out-of-scope** portion of the plant must have in order to support the in-scope portion of the design.
>
> **An example would be Steam Generator Tube Surveillance Programs in 5.4.2.**
>
> Combined license (COL) information items identify certain matters that must be addressed in the site-specific portion of the final safety analysis report (FSAR) by an applicant who references the AP1000 design certification rule. These items constitute information requirements but are not the only acceptable set of information in the FSAR. An applicant may depart from or omit these items, provided that the departure or omission is identified and justified in the FSAR. A summary of the AP1000 COL information items is **provided in Table 1.8-2** of the DCD.
>
> **An example is Pressurizer Surge Line Thermal Monitoring in 3.9-5.**

Appendix F of the NRC SER lists all COL items. It is a large Appendix that references each section of the staff SER. Some examples are listed on the next slide.

Appendix F – SER NUREG 1793

- Significant COL Actions include:
  - Site safety analysis including seismic analysis.
  - IST/ISI programs.
  - Instrumentation set point analysis.
  - Protection system FMEAs.
  - Electric Grid analysis.
  - Numerous safety programs: fire, radiation protection.
  - GSI resolution: containment sump (191).
  - Test program.
  - Human Factors.

U.S.NRC
United States Nuclear Regulatory Commission
Protecting People and the Environment

365

Read through the slide

Conclude that significant work remains for the COL applicant.

Lets turn to ITAAC and the expectations for the COL applicant.

ITAAC Closure

- Inspections Tests Analysis and Acceptance Criteria (ITAAC).
- Listed in COL.
- Notification and demonstration to the NRC.
- NRC staff and commission review prior to fuel load.
- Notice and opportunity for public hearing.

U.S.NRC
United States Nuclear Regulatory Commission
Protecting People and the Environment

366

Read through the following:

Inspections, Tests, Analysis and Acceptance (IATAAC) are the required means by which the NRC and the public are able to verify that the licensee has completed certain construction steps and milestones in the construction of the plant. The requirements and criteria for each ITAAC are defined for a **certified** reactor design and also the combined operating license granted by the NRC.

All ITAAC are subsequently listed in the combined license (COL) issued by the NRC as a requirement for the licensee to meet before authorization for fuel load is authorized by the NRC.

A significant part of facility construction includes the performance of these activities. The regulations include requirements for the licensee to notify the NRC regarding ITAAC schedules and their completion. In particular, the licensee is required by 1 0CFR 52.99(c) to notify the NRC that each prescribed inspection, test, and analysis has been performed and that the prescribed acceptance criteria have been met. This notification must also contain sufficient information to demonstrate that the prescribed inspections, tests, and analyses have been properly performed and that the applicable acceptance criteria have been met.

This information will support a review by the NRC staff and the 10 CFR 52.103(g) finding by the commission that is necessary prior to allowing facility operation.

Members of the public or other stakeholders who have a concern regarding completion of ITAAC and whose interests may be affected by the operation of the plant may request that the Commission hold a hearing.

Part 52 requires that the licensee will not be authorized to operate the facility until the commission makes a finding that the acceptance criteria in the combined license are met. This also includes DAC.

ACRS

- The NRC's Advisory Committee on Reactor Safeguards (ACRS) is statutorily mandated by the US Atomic Energy Act of 1954, as amended. The committee has three primary purposes:
  - to review and report on safety studies and reactor facility license and license renewal applications.
  - to advise the commission on the hazards of proposed and existing reactor facilities and the adequacy of proposed reactor safety standards.
  - to initiate reviews of specific generic matters or nuclear facility safety-related items.
- The ACRS is independent of the NRC staff and reports directly to the commission, which appoints its members.
- The results of the ACRS review are documented in chapter 23 of the staff SER.
- The ACRS review is required by 10 CFR 52.53, "The ACRS shall report on those portions of the application which concern safety."

U.S.NRC
United States Nuclear Regulatory Commission
Protecting People and the Environment

367

Read through each point of the slide.

ACRS Focus

- Points made in interim letters included:
  - Agreed with use of DAC for piping design (in addition to I&C and control room).
  - Need to further investigate T/H issues especially analysis codes and test program.
  - Agreement with three licensing exemptions for ATWS, control room, offsite power.
  - Focus on importance of ADS Squib valve-tests and verification of performance.
  - Containment sump performance importance.
  - SSC materials selection and QA issues.
  - Severe accident issues:
    - In-vessel retention.
    - Organic iodine production in containment water.
    - Steel containment failure modes/source terms.

U.S.NRC
United States Nuclear Regulatory Commission
Protecting People and the Environment

368

This slide lists many of the major issues that were the focus of ACRS review.

Periodic meetings and letters were held/written throughout the review and are referenced in the AP1000 SER.

On the basis of its reviews, the ACRS issued an interim letter report, dated March 17, 2004, which addresses the AP1000 design.

Go through the slide.

ACRS Review of Public Comments

- ACRS reviewed of public comments on AP1000 safety performance:
  - Impact of solar radiation heat on ultimate heat sink performance.
  - QA procedures.

U.S.NRC
United States Nuclear Regulatory Commission
Protecting People and the Environment

369

The ACRS was requested by the commission to review comments from a concerned member of the public. This review is part of the record documented in 1793.

The committee found that these issues were addressed adequately in the review.

ACRS Comments

- Specific comments included:
  - Accommodations made for the higher power level.
  - Intent to meet goals of the EPRI utility requirements document.
  - Noted passive safety philosophy.
  - Noted special requirements for RTNSS and defense in depth.
  - PRA was well done, risk metrics are will within NRC's expectations for new plants and the use of the PRA as part of the design process is significant to achieving low risk.

U.S.NRC
United States Nuclear Regulatory Commission
Protecting People and the Environment

370

The ACRS review is an important part of the NRC regulatory process.

Included here are the major comments from their final letter.

Note each item:

For the instructor - may want to mention that the ACRS noted in their letter that they agreed with staff on all but 2 issues which are as follows:
in-vessel retention and organic iodine production. It is noted that they resolved these issues on their own.

ACRS Conclusion

- In its final letter report dated July 20, 2004, the ACRS concluded that the AP1000 design is robust and offers reasonable assurance that an AP1000 standard plant can be built and operated without posing an undue risk to the health and safety of the public.

- **The ACRS reviewed the NRC staff's safety evaluation and concluded that the staff had done a comprehensive and competent assessment of the compliance of the AP1000 design with the required regulations.**

U.S.NRC
United States Nuclear Regulatory Commission
Protecting People and the Environment

371

Read through this slide before proceeding to the last slide.

NRC's AP1000 Review Results

- The NRC staff reviewed the DCD, the PRA, and the Tier 1 information, and the standards in Parts 20, 50, 73, and 100, as they are relevant to the AP1000, as modified by exemptions.
- On the basis of its evaluation and independent analysis, the staff concludes in its SER that the application meets these requirements.
- Refers to the letter of the Advisory Committee on Reactor Safeguards.
- Chapter 24 of the NRC SER provides an overview of all rationale for the NRC review.

U.S.NRC
United States Nuclear Regulatory Commission
Protecting People and the Environment

372

This is the final conclusion of all of the NRC review.

Read through the slide.

Background only for the instructor.

The exact conclusion of the NRC SER NUREG-1793 states that:

In accordance with Title 10 of the Code of Federal Regulations (10 CFR) Part 52.48,"Standards for Review of Applications," the staff of the U.S. Nuclear Regulatory Commission (NRC) reviewed the AP1000 design control document, probabilistic risk assessment, and Tier 1 information in accordance with the standards set forth in 10 CFR Part 20, "Standards for Protection Against Radiation," Part 50, "Domestic Licensing of Production and Utilization Facilities," and its appendices, and Parts 73, "Physical Protection of Plants and Materials," and 100, "Reactor Site Criteria," as they apply to applications for construction permits and operating licenses for nuclear power plants, and are applicable and technically relevant to the AP1000standard design, and as modified by the exemptions identified in Section 1.8 of this report.

On the basis of its evaluation and independent analyses as discussed in this report, the staff concludes that Westinghouse Electric Company's application for design certification meets these requirements.

Appendix G to this report includes a copy of the related report by the NRC's Advisory Committee on Reactor Safeguards, as required by 10 CFR 52.53, "Referral to the ACRS."