APPENDIX C

NOTIFICATION OF INDICATION

PART I - FINDINGS

NOI No. _____ Plant/Unit _____
Examination Report No. _____ Component ID _____
Drawing No. _____ CAQR No. _____
Description of Indication: (Sketch/Photograph if needed)

_____

Condition Adverse to Quality Report (CAQR) initiated? ___ No, ___ deferred to Part II below, ___ Yes, CAQR No. entered above

Signature of Examiner/Certif. Level _____
Date

Signature of Field Supervisor (Contractor) _____
Date

SQO Representative _____
Date

Assigned to: _____ _____ By _____
Nuclear Site Director's Organization Representative

PART II - DISPOSITION

_____

Condition Adverse to Quality Report (CAQR) required? ___ (See Part I Above), ___ No, ___ Yes, CAQR No. entered above.

Disposition Prepared By _____
Date

Disposition Approved By _____
Date

PART III - VERIFICATION

Verification of Completed Corrective Action and/or Examination By SQO Representative

_____

Work Instruction No. _____ DCR No. _____ Reexamination Report No. _____

Signature _____ Date _____

REQUEST FOR RELIEF ISI-1

Components: 1) Various piping systems and 2) uncladded vessel welds in ferritic material less than 2 inches in thickness.

Class: ASME Class 1 and 2 (TVA Safety Class A and B)

Inspection Requirement: Ultrasonic examination of welds, paragraph T-530 of ASME Section V, Article 5, thru Summer 1975 Addenda as referenced in paragraph IWA-2232 of ASME Section XI thru Summer 1975 Addenda.

Basis for Relief:

A. Paragraph T-533 of Article 5 of ASME Section V requires in part that drilled holes, parallel to the contact surface of the calibration block, be used to establish the primary reference response of the equipment and to construct a distance-amplitude-correction curve (DCA). No known technique exists for inducing drilled holes, which are parallel to the contact surface, in the circum- ferential direction of curved calibration blocks. It is virtually impossible, using standard ultrasonic examination techniques, to establish a repeatable distance-amplitude-correction curve in materials less than approximately 0.375-inch thick using drilled holes caused by saturation of the part by ultrasound. Additionally, drilled holes are not representative of the reflectivity of flaws which are of major concern, i.e., surface cracks, incomplete penetration, and stress corrosion cracking.

The inherent difficulties of utilizing drilled holes as reference reflectors, particularly in the area of austenitic and high nickel welds, is an industry recognized problem, and steps have been taken to address this in later addenda to both ASME Section V and Section XI. Paragraph T-547 of the winter 1978 addenda to ASME Section V required the use of longitudinal and circumferential notches located on the I.D. and O.D. surface of the calibration block at a nominal depth of 10%t in ferritic materials. Paragraph T-548 of this document allows these techniques to be modified and/or supplemented for the Section XI, Appendix III-4500 and IWA-2232, which require recording of all indications greater than 50% DAC with an evaluation required of those indications greater than 100% DAC.

<u>Alternate Inspection:</u> TVA proposes to continue the use of notches located on the I.D. and O.D. surfaces at a nominal depth of 5%t as reference reflectors. However, TVA at its discretion may use notches at a nominal depth up to 10%t as permitted by the Summer 1978 Addenda of Section XI. Further, TVA proposes to continue the detailed evaluation of all reflectors which exceed the 100% DAC and the recording of all other indications greater than 50% DAC. TVA considers the use of strip chart recorders as an acceptable recording method for the latter requirement.

Request for Relief ISI-2 has been withdrawn.

Request for Relief ISI-3 has been withdrawn.

REQUEST FOR RELIEF ISI-4

Components: Pressure-retaining welds in piping (See List Below)

Class: ASME Class 1 and 2 (TVA Safety Class A and B)

Inspection Requirement: Volumetric examination of longitudinal, circumferential, and pipe branch connection welds, exam- ination categories B-F, B-J, C-F, and C-G.

Basis for Relief: In some cases it will be impractical to ultrasonically examine all welds in accordance with paragraph T-532 of Article 5, Section V of the ASME Code or Appendix III, Subarticle III-4400 of Section XI of ASME Code 1977 Edition, Summer 1978 Addenda and achieve meaningful results, i.e., nonremovable hanger interference or valve and pump casings adjoining the welds.

Each weld had a construction radiographic examination performed in accordance with ASME Section III.

Alternate Inspection: Ultrasonic examinations will be performed to the extent practical and supplemented with Section XI surface examinations on all accessible areas of the weld.

REQUEST FOR RELIEF ISI-4

Weld Number[1]	Code Category[2]	Drawing Number	Physical Configuration[3]	Scan[4]/Limitation[5]	Remarks[6]
SIF-D091-4	BJ	CHM-2758-C 9 of 13	E/V	3/5:00-8:00 4/No scan from valve	Elbow introdoses prevents coupling from 5:00-8:00 (Note 7)
SIF-D090-5	BJ	CHM-2758-C 8 of 13	V/T	3/No scan 4/No scan	Limited examination due to component geometry (Note 7)
SIF-D089-6	BJ	CHM-2758-C 7 of 13	V/T	3/No scan 4/No scan	Limited examination due to component geometry (Note 7)
SIF-D091-6	BJ	CHM-2758-C 9 of 13	V/T	3/No scan 4/No scan	Limited examination due to component geometry (Note 7)
UHIF-D043-6	BJ	ISI-0004-C 4 of 5	V/F	3/No scan 4/No scan	Limited examination due to component geometry (Note 7)
UHIF-D043-5	BJ	ISI-0004-C 4 of 5	V/F	3/No scan 4/No scan	Limited examination due to component geometry (Note 7)
SIF-D090-6	BJ	CHM-2758-C 8 of 13	P/V	3/No Scan 4/2:00-5:00	Limited examination due to component geometry (Note 7)
RCF-D234-3	BJ	ISI-0017-C 4 of 11	E/V	3/No scan 4/5:00-7:00	Elbow introdoses prevents coupling from 5:00-7:00 (Note 8)
RCF-D236-4	BJ	ISI-0017-C 5 of 11	E/V	3/5:00-7:00 4/No scan	Elbow introdoses prevents coupling from 5:00-7:00 (Note 8)
RCF-D232-2	BJ	ISI-0017-C 1 of 11	V/R	3/No scan 4/No scan 5/No base metal exam 6/No base metal exam	Limited examination due to component geometry (Note 8)
MSF-D001-1	CG	CHM-2669-C 1 of 4	E/N	3/No scan 4/ 1/2 VEE path exam	Limited examination due to component geometry
MSF-D006-15	CG	CHM-2669-C 4 of 4	V/F	3/No scan 4/No scan	Limited examination due to component geometry
FWF-D372-8	CG	CHM-2671-C 6 of 8	R/R	3/No scan 4/No scan	Limited examination due to component geometry

REQUEST FOR RELIEF ISI-4 (Continued)

Weld Number[1]	Code Category[2]	Drawing Number	Physical Configuration[3]	Scan[4]/Limitation[5]	Remarks[6]
UHIS-66	CF	ISI-0004-C 5 of 5	P/F	3/No scan 4/12:00-3:00	Limited examination due to component geometry
RHRF-D047-4	CF	CHM-2636-C 2 of 8	E/T	4/2:00-4:00, 8:00-10:00	Limited examination due to component geometry
RHRS-132	CF	CHM-2636-C 6 of 8	E/E	3/4:00-8:00 4/12:00-5:00	Elbow introdoses prevents coupling from 4:00-5:00
RHRS-182	CF	CHM-2636-C 6 of 8	E/T	3/5:00-7:00 4/6:00-9:00	Elbow introdoses prevent coupling from 6:00-7:00
RHRF-D051-12 LS	CF	CHM-2636-C 6 of 8	E	9/No scan 10/No scan	Elbow introdoses prevents ultrasonic coupling
RHRS-132-LS	CF	CHM-2636-C 6 of 8	E	9/No scan 10/No scan	Elbow introdoses prevents ultrasonic coupling
SIS-40-LS	CF	CHM-2758-C 3 of 13	E	9/No scan 10/No scan	Elbow introdoses prevents ultrasonic coupling
SIF-D080-1-LS	CF	CHM-2758-C 2 of 13	E	9/No scan 10/No scan	Elbow introdoses prevents ultrasonic coupling
FWF-D081-6	CG	CHM-2671-C 1 of 8	E/V	3/11:00-1:00, 2:00-4:00, 5:00-7:00 4/No scan 5/See scan 3 limits 6/See scan 3 limits	Limited examination due to component geometry and permanent support
FWS-41	CG	CHM-2671-C 4 of 8	R/P	4/3:00-5:00 5/3:00-5:00 6/3:00-5:00	Limited examination due to permanent support
UHIF-D039-17	CF	ISI-0004-C 5 of 5	Pen P/ Pen F	No scans	No examination due to weld inside penetration
RCW-14		ISI-0017-C 1 of 11	F/V	No scan	No examination due to component geometry (Note 8)

REQUEST FOR RELIEF ISI-4 (Continued)

Weld Number[1]	Code Category[2]	Drawing Number	Physical Configuration[3]	Scan[4]/Limitation[5]	Remarks[6]
RCW-1B		ISI-0017-C 1 of 11	F/V	No scan	No examination due to component geometry (Note 8)
MSS-61A-LS	CG	CHM-2669-C 4 of 4	P	All/Limited by 10%	Limited examinations due to pipe support
MSS-61B-LS	CG	CHM-2669-C 4 of 4	P	All/Limited by 10%	Limited examinations due to pipe support
MSF-D006-10 (R-581)	CG	CHM-2669 4 of 4	P/V	4/Limited	Limited examination due to component geometry
RCS-106	B-J	ISI-0017-C 6 of 11	F/P	3/No scan 4/7:00 to 11:00	Limited examination due to component geometry and permanent pipe restraint. (Note 8)
RHRF-D055-10	C-F	CHM-2636-C 8 of 8	E/V	3/9:00 4/No scan	Limited examination due to component geometry and gamma plug.
SIF-D088-9	CF	CHM-2758-C 6 of 14	E/P	All/6:00	Limited examination due to thermocouple.
RCF-B4-4	B-J	CHM-2758-C 13 of 13	Branch Connection Boss/P	No Scan	No examination due to boss and pipe configuration (Note 8)
UHEF-D039-15A	CF	ISI-0004-C 5 of 5	PEN P/ PEN P	No Scan	No examination due to weld inside penetration
MSF-D001-1	CG	CHM-2669 1 of 4	N/E	3/No scan 4/3:00	Limited examination due to 1 / " branch connection and component geometry
RHRF-D049-4	CF	CHM-2636-C 5 of 8	P/E	4/No scan 3/12:00	Limited examination due to 2" branch connection and component geometry
SIF-B-T059-2B	BJ	CHM-2758-C 11 of 13	P/F	4, 5, 6/No scan	Limited examination due to flange bolting and configuration (Note 8)

REQUEST FOR RELIEF ISI-4 (Continued)

Weld Number[1]	Code Category[2]	Drawing Number	Physical Configuration[3]	Scan[4]/Limitation[5]	Remarks[6]
MSS-8	CG	CHM-2669-C 1 of 4	E/P	3, 4, 5, 6/6:00	Limited examination due to pipe support.
SIF-8-T059-2A	BJ	CHM-2758-C of 13	F/P	4, 5, 6/No scan	Limited examination due to flange bolting and configuration (Note 8)
RCS-1-4	B-J	CHM-2547-B 1 of 2	E/P	4/Limited base metal/limited	Limited examination due to elbow geometry (Note 9)
RCS-2-4	B-J	CHM-2547-B 1 of 2	E/P	4/Limited base metal/limited	Limited examination due to elbow geometry (Note 9)
RCS-3-4	B-J	CHM-2547-B 1 of 2	E/P	4/Limited base metal/limited	Limited examination due to elbow geometry (Note 9)
RCS-4-4	B-J	CHM-2547-B 1 of 2	E/P	4/Limited base metal/limited	Limited examination due to elbow geometry (Note 9)
RCF-D1-2	B-F	CHM-2547-B 1 of 2	E/N	4/No scan	Limited examination due to nozzle geometry (Note 9)
RCF-D5-2	B-F	CHM-2547-B 1 of 2	E/N	4/No scan	Limited examination due to nozzle geometry (Note 9)
RCF-D2-2	B-F	CHM-2547-B 1 of 2	E/N	4/No scan	Limited examination due to nozzle geometry (Note 9)
RCF-D4-2	B-F	CHM-2547-B 1 of 2	E/N	4/No scan	Limited examination due to nozzle geometry (Note 9)
RCF-F4-1	B-F	CHM-2547-B 1 of 2	N/E	3/No scan	Limited examination due to nozzle geometry (Note 9)
RCF-F3-1	B-F	CHM-2547-B 1 of 2	N/E	3/No scan	Limited examination due to nozzle geometry (Note 9)
RCF-F2-1	B-F	CHM-2547-B 1 of 2	N/E	3/No scan	Limited examination due to nozzle geometry (Note 9)

REQUEST FOR RELIEF ISI-4 (Continued)

Weld Number[1]	Code Category[2]	Drawing Number	Physical Configuration[3]	Scan[4]/Limitation[5]	Remarks[6]
RCS-1-5	B-J	CHM-2547-B 1 of 2	Branch Connections	3/Limited	Limited examination due to branch connection configuration (Note 9)
RCS-2-5	B-J	CHM-2547-B 1 of 2	Branch Connections	3/Limited	Limited examination due to branch connection configuration (Note 9)
RCS-3-5	B-J	CHM-2547-B 1 of 2	Branch Connections	3/Limited	Limited examination due to branch connection configuration (Note 9)
RCS-4-5	B-J	CHM-2547-B 1 of 2	Branch Connections	3/Limited	Limited examination due to branch connection configuration (Note 9)
RCS-4-6	B-J	CHM-2547-B 1 of 2	Branch Connections	4/No scan	Limited examination due to branch connection configuration (Note 9)
RCS-P-1	B-J	CHM-2547-B 1 of 2	Branch Connections	4/No scan	Limited examination due to branch connection configuration (Note 9)
RHRS-35A	C-F	CHM-2636-C 3 of 8	Pen P/ Pen F	No scan	No examination due to weld inside penetration
RHRS-159A	C-F	CHM-2636-C 6 of 8	Pen P/ Pen F	No scan	No examination due to weld inside penetration
MSS-55A	C-G	CHM-2669-C 4 of 4	Pen P/ Pen F	No scan	No examination due to weld inside penetration
FWS-4B	C-G	CHM-2671-C 1 of 8	Pen F/ Pen P	No scan	No examination due to weld inside penetration
FWS-63	C-G	CHM-2671-C 7 of 8	Pen F/ Pen P	No scan	No examination due to weld inside penetration

REQUEST FOR RELIEF ISI-4 (Continued)

Weld Number[1]	Code Category[2]	Drawing Number	Physical Configuration[3]	Scan[4]/Limitation[5]	Remarks[6]
SIS-76A	C-f	CHM-2758-C 6 of 13	Pen P/ Pen P	No scan	No examination due to weld inside penetration
UHIS-76A	C-f	ISI-0004-C 5 of 5	Pen P/ Pen P	No scan	No examination due to weld inside penetration
RCF-A-T129-7	B-J	ISI-0017-C 1 of 11	V/P	3/No Scan 4/2:00, 5:00, 8:00, 11:00	Limited examination due to integrally-welded support attachments (Note 8)

REQUEST FOR RELIEF ISI-4 (Continued)

NOTES:

1. LS following seam number indicates longitudinal seam.
2. Categories determined in accordance with ASME XI 74S75.
3. P = Pipe, V = Valve, E = Elbow, T = TEE, R = Reducer, F = Flange, N = Nozzle, Pen P = Penetration Process Pipe, and Pen F = Penetration Flued Head.
4. Scans 3 and 4 are perpendicular to circumferential welds.

   Scans 5 and 6 are parallel to circumferential welds.

   Scans 7 and 8 are perpendicular to longitudinal welds.

   Scans 9 and 10 are parallel to longitudinal welds.
5. Limitations are expressed in o'clock references. In general, the exact limitation is noted rather than a percentage of the required examinations.
6. Examinations conducted from one side of the weld provide full coverage within the variable limits of weld penetrability and opposite surface condition.
7. This weld can be exempt from examination to the later code since the stress level and usage factor were below the limits under loads associated with specific seismic events and operational conditions. [1977 Edition, Summer 1978 Addenda, Table IWB-2500-1, Category B-J, Noted (1)(b)]
8. This weld can be exempt from volumetric examination by the later code since the nominal pipe size is less than four inches. (1977 Edition, Summer 1978 Addenda, Table 2500-1, Category B-J)
9. Because of the attenuation resulting from inherent coarse grain structure in cast stainless steel the examination is limited to the V technique. Also physical restrictions prevent the exam from both sides of the weld.

REQUEST FOR RELIEF ISI-5

Components: Steam generator (four per unit)

Class: ASME Class 2 (TVA Safety Class B)

Inspection Requirement: Volumetric examination of circumferential shell welds, examination categories C-A.

Basis for Relief: One circumferential shell weld on each generator is inaccessible due to the upper steam generator support brackets (weld numbers SG-4B-5-1, SG-4B-5-2, SG-4B-5-3, and SG-4B-5-4). See attached drawings. One weld on one generator will be examined on a "best effort" basis for the preservice examination.

Weld SG-4B-5-1 was selected to be examined on a best effort basis for preservice inspection. It was determined that at least 55 percent of the examination volume was examined due to the support bracket interface.

Alternate Inspection: None

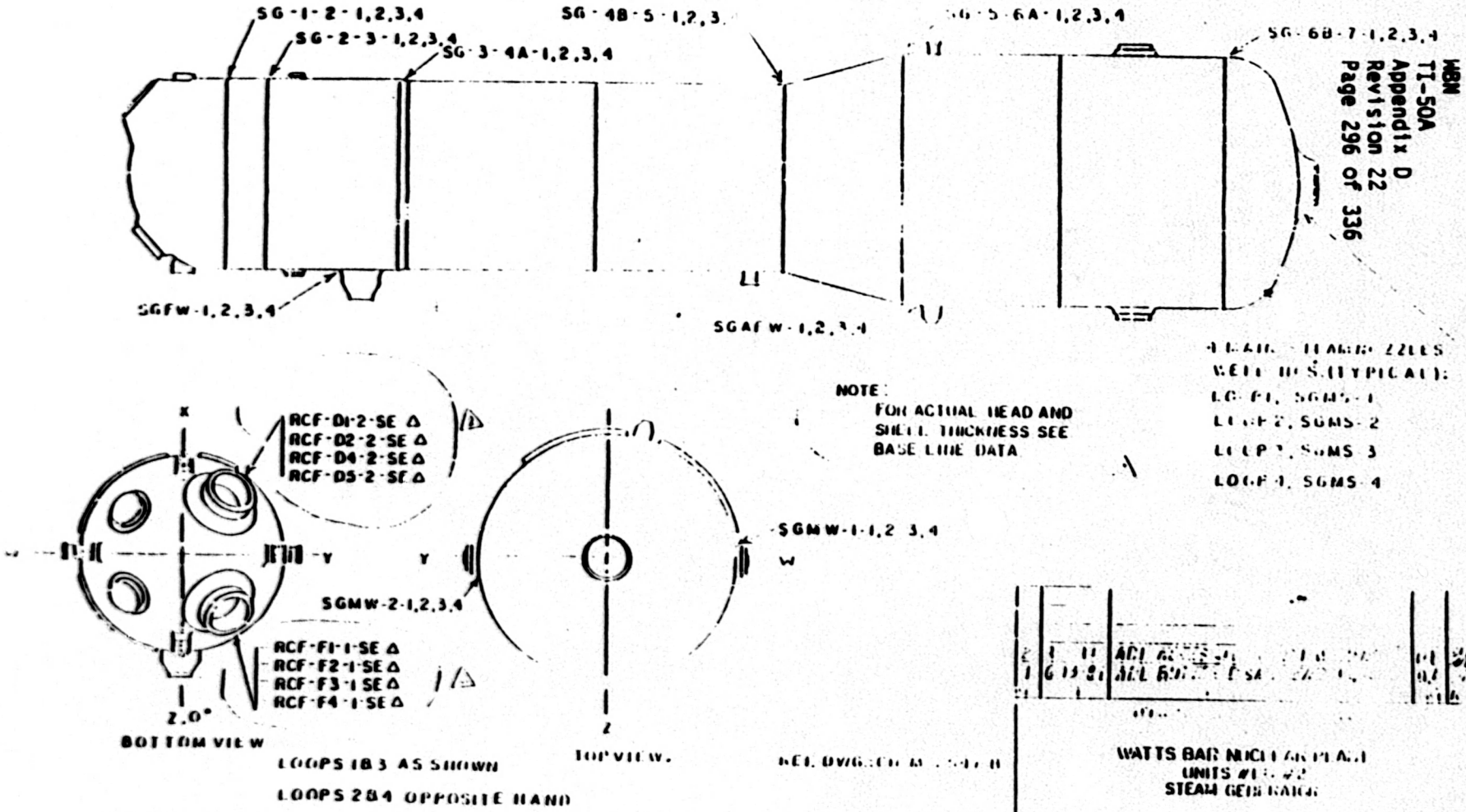
SG-1-2-1,2,3,4
SG-2-3-1,2,3,4
SG-3-4A-1,2,3,4
SG-4B-5-1,2,3
SG-5-6A-1,2,3,4
SG-6B-7-1,2,3,4
SGFW-1,2,3,4
SGAFW-1,2,3,4
NOTE:
FOR ACTUAL HEAD AND SHELL THICKNESS SEE BASE LINE DATA
RCF-D1-2-SE Δ
RCF-D2-2-SE Δ
RCF-D4-2-SE Δ
RCF-D5-2-SE Δ
RCF-F1-1-SE Δ
RCF-F2-1-SE Δ
RCF-F3-1-SE Δ
RCF-F4-1-SE Δ
SGMW-1-1,2,3,4
SGMW-2-1,2,3,4
X
Y
W
Z
2.0°
BOTTOM VIEW
TOP VIEW
LOOPS 1&3 AS SHOWN
LOOPS 2&4 OPPOSITE HAND
Δ BUTTERED SAFE END
SEE DETAIL A ON SHEET 2
WATTS BAR NUCLEAR PLANT
UNITS #1 & #2
STEAM GENERATOR

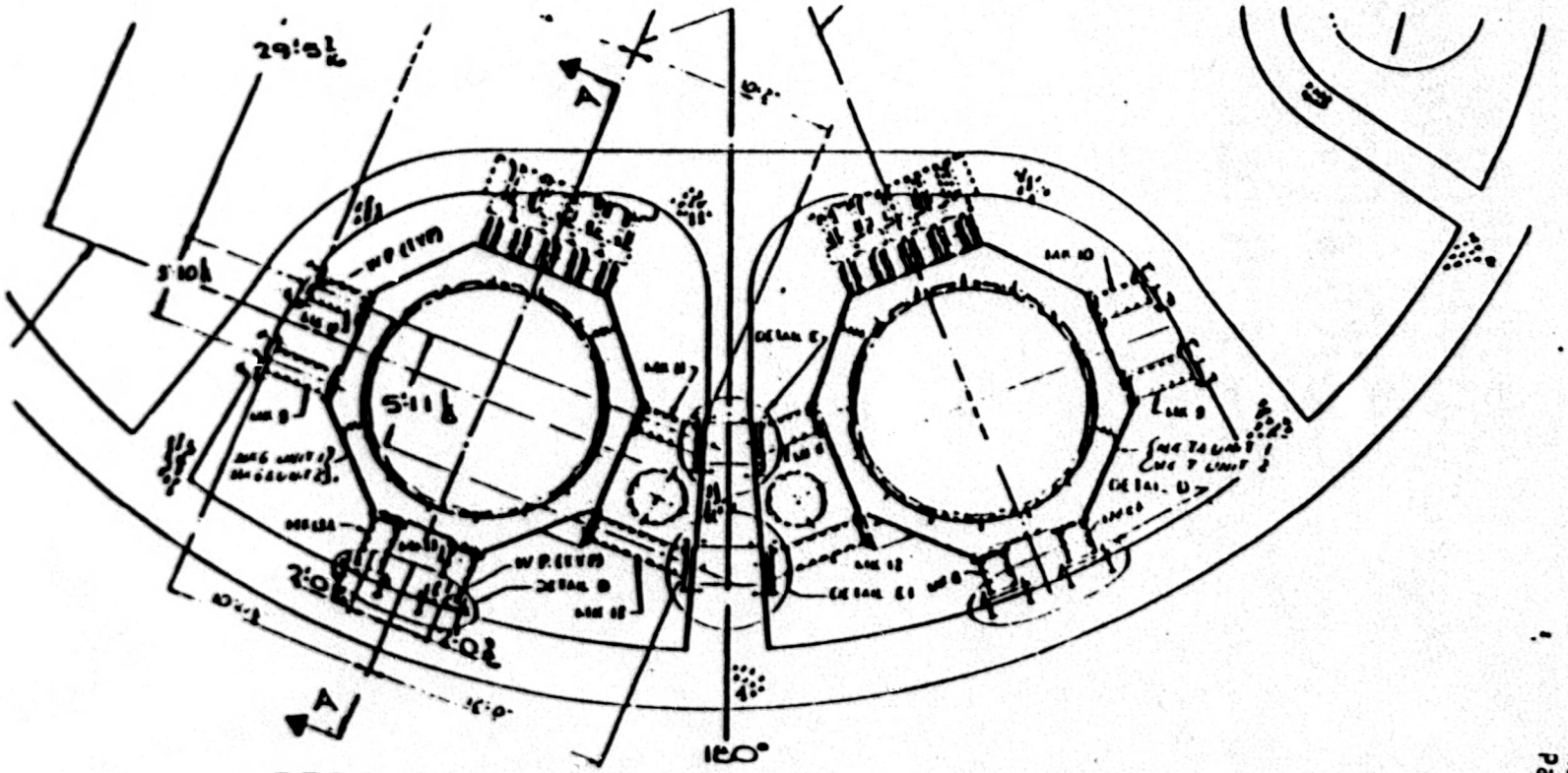

UPPER STEAM GENERATOR SUPPORT ARRANGEMENT

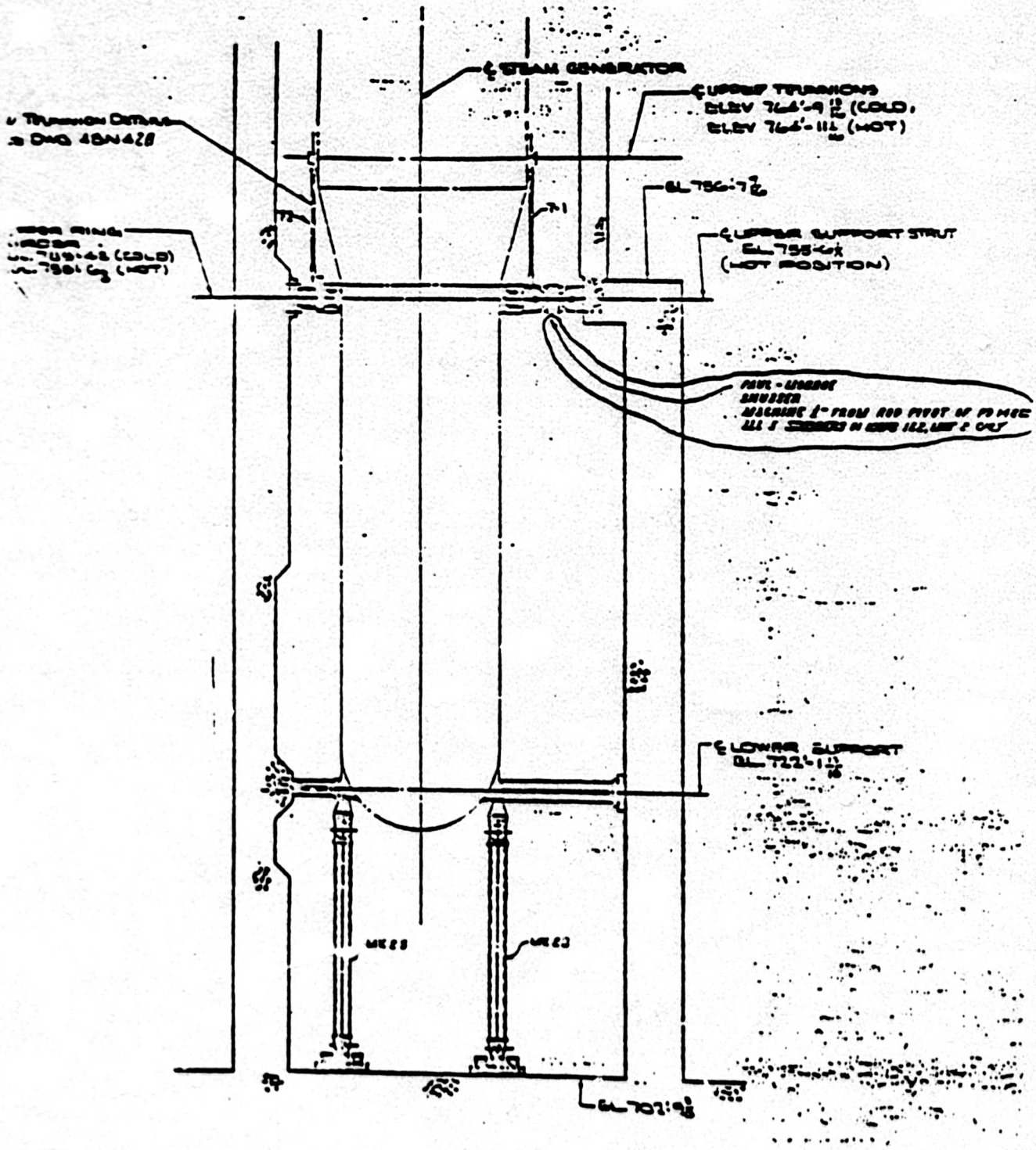
℄ STEAM GENERATOR
℄ UPPER TRUNNIONS
ELEV 764'-9 13/16 (COLD)
ELEV 764'-11 1/16 (HOT)
EL 756'-7 3/8
℄ UPPER SUPPORT STRUT
(HOT POSITION)
℄ LOWER SUPPORT
MK 23

REQUEST FOR RELIEF ISI-6

Component: Reactor Pressure Vessel

Class: ASME Class 1 (TVA Safety Class A)

Inspection Requirement: A 100 percent preservice volumetric examination of lower head dollar weld, examination category B-B, under conditions and with equipment and techniques equivalent to those expected to be employed during inservice inspection.

Basis for Relief: TVA will employ automated remote inspection devices to examine most of the reactor vessel welds. These examinations will be conducted from the vessel inside diameter. However, the lower head weld on each reactor pressure vessel is partially inaccessible for examination for the vessel inside diameter due to instrumentation tubes which penetrate the lower head (weld no. W01-02 see attached drawings). Portions of the weld can be examined from one side (as permitted by I-5121 of Section XI) and will include 100 percent of the examination volume in accordance with IWB-3511.1 of Section XI. These portions of the weld will be re-examined during the inservice intervals in accordance with examination category B-B of Table IWB-2500.

Alternate Inspection: A 100 percent preservice examination of the weld will be conducted from the vessel outside diameter. This will be accomplished by performance of a manual ultrasonic examination. A remote ultrasonic examination will be conducted from the vessel inside diameter on all accessible areas of the weld.

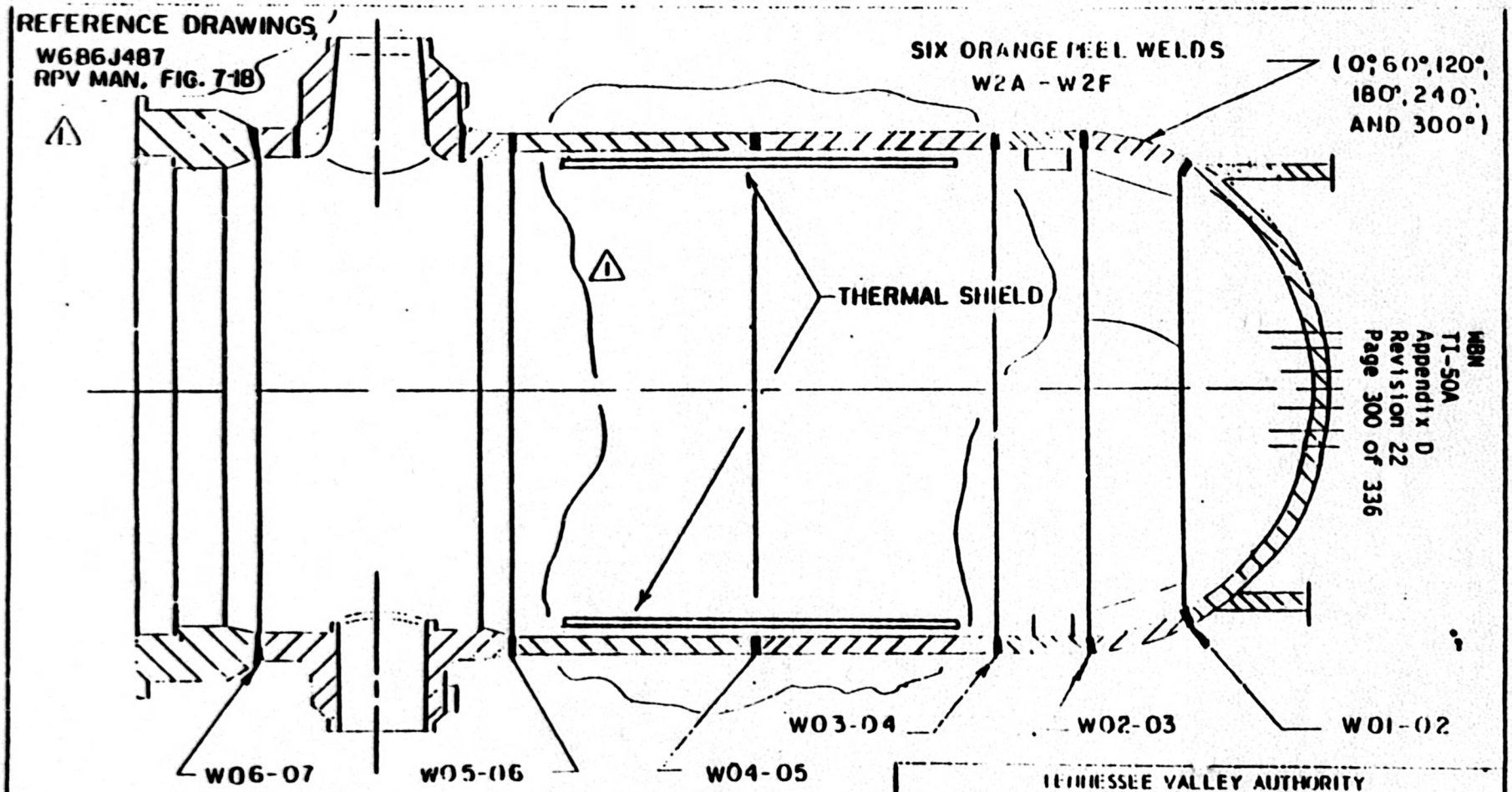

WBN
TI-50A
Appendix D
Revision 22
Page 300 of 336

NO.	DATE	REVISIONS	CK'D	APP.
1	4-7-82	ADD THERMAL SHIELD AND REF. DWGS	DAD	

TENNESSEE VALLEY AUTHORITY
DIVISION OF POWER PRODUCTION

WATTS BAR NUCLEAR PLANT
UNITS #1 & #2
REACTOR VESSEL
(SEAM WELDS)

SCALE: NTS
DRAWN
TRACED RAS
CHECKED

SUBMITTED

APPROVED

DATE 10-3-78

CH-M 2551 A

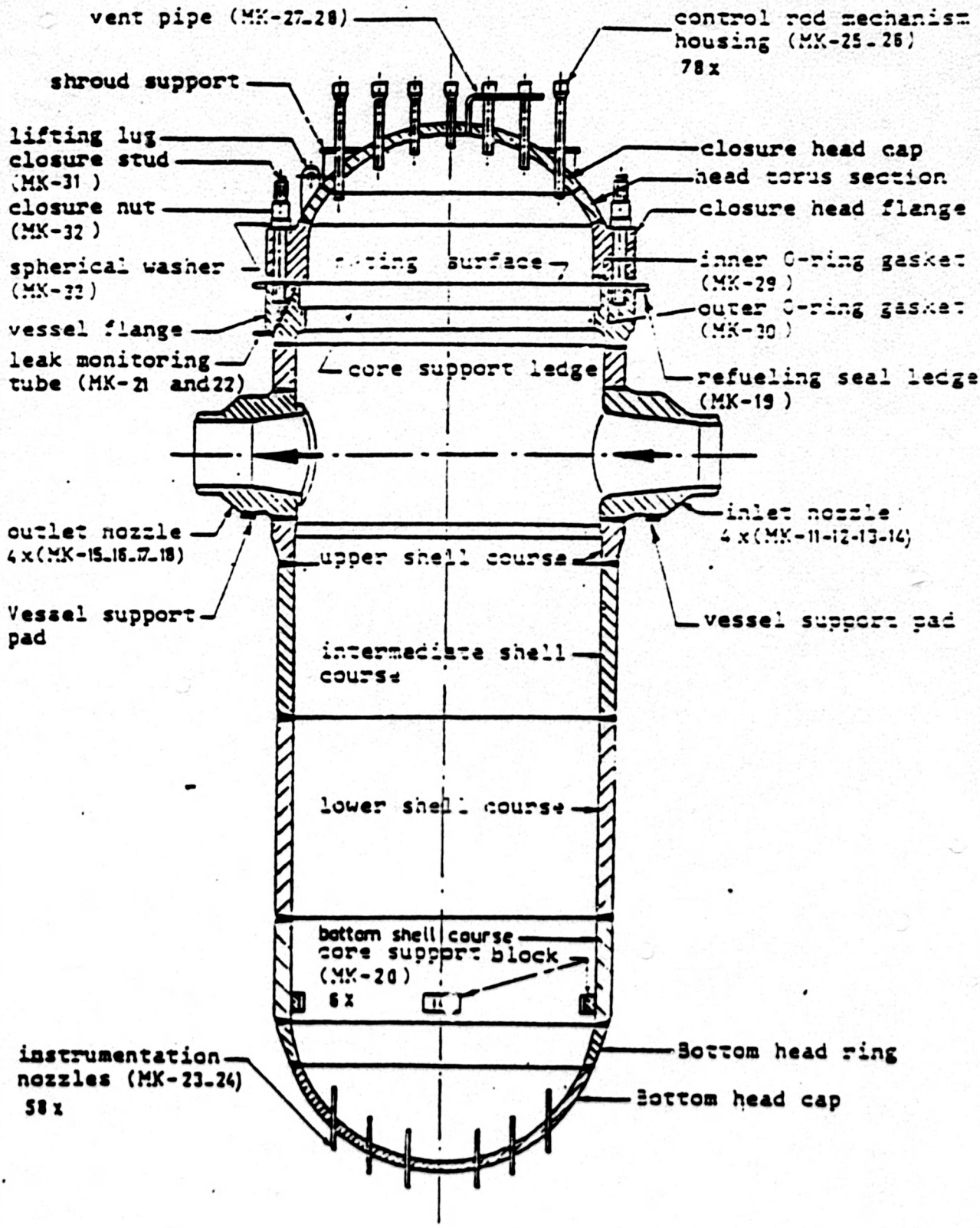
vent pipe (MK-27_28)
control rod mechanism housing (MK-25_26) 78x
shroud support
lifting lug
closure stud (MK-31)
closure nut (MK-32)
closure head cap
head torus section
closure head flange
spherical washer (MK-33)
mating surface
inner O-ring gasket (MK-29)
outer O-ring gasket (MK-30)
vessel flange
leak monitoring tube (MK-21 and 22)
core support ledge
refueling seal ledge (MK-19)
inlet nozzle 4x(MK-11-12-13-14)
outlet nozzle 4x(MK-15_16_17_18)
upper shell course
Vessel support pad
vessel support pad
intermediate shell course
lower shell course
bottom shell course
core support block (MK-20) 6x
instrumentation nozzles (MK-23_24) 58x
Bottom head ring
Bottom head cap

REQUEST FOR RELIEF ISI-7 HAS BEEN WITHDRAWN

REQUEST FOR RELIEF ISI-8 HAS BEEN WITHDRAWN

REQUEST FOR RELIEF ISI-9

Components: Reactor coolant pumps (four per unit)

Class: ASME Class 1 (TVA Safety Class A)

Inspection Requirement: Volumetric examination of pressure-retaining welds in pump casing, examination category B-L-1.

Basis for Relief: Each reactor coolant pump casing consists of a two-piece welded type 304 SST casting. The present capability of ultrasonic testing is not sufficient to examine cast material of this thickness and achieve meaningful results.

Alternate Inspection: All four welds will be surface examined for the preservice examinations.

REQUEST FOR RELIEF ISI-10

Components: Regenerative Heat Exchanger

Class: ASME Class 2 (TVA Safety Class B)

Inspection Requirement: Volumetric examination of at least 20 percent of each circumferential butt weld (head-to-shell, tube sheet-to-shell) in examination category C-A. This examination shall be uniformly distributed among three areas around the vessel circumference.

Basis for Relief: The regenerative heat exchanger has 12 circumferential welds to be examined. Seven of these welds can be code examined and 20 percent of each of the other five circumferential welds (listed below) can be examined, however, because of permanent and nonremovable supports the examination area cannot be uniformly distributed.

Weld Number	Code Category	Drawing Number	Physical Configuration	Scan Limitation	Remarks
RHX-2	C-A	ISI-0007-A (See attached drawing)	Tube sheet to shell	5 and 6 at 6:00 to 12:00	Limited due to nonremovable support
RHX-6	C-A	ISI-0007-A (See attached drawing)	Tube sheet to shell	3, 5, and 6 at 7:00 to 11:00	Limited due to permanent support
RHX-7	C-A	ISI-0007-A (See attached drawing)	Shell to tube sheet	4, 5, and 6 at 7:00 to 11:00	Limited due to permanent support
RHX-10	C-A	ISI-0007-A (See attached drawing)	Tube sheet to shell	3, 5, and 6 at 6:00 to 12:00	Limited due to nonremovable support
RHR-11	C-A	ISI-0007-A (See attached drawing)	Shell to tube sheet	4, 5, and 6 at 6:00 to 12:00	Limited due to nonremovable support

Notes:

1. Scan 3 and 4 are perpendicular to circumferential welds. Scan 5 and 6 are parallel to circumferential welds.

2. Limitations are expressed in O'clock references.

REQUEST FOR RELIEF ISI-10 (Continued)

Alternate Inspection: These five circumferential welds shall be volumetrically examined in all accessible areas. This will exceed the 20-percent examination requirements.

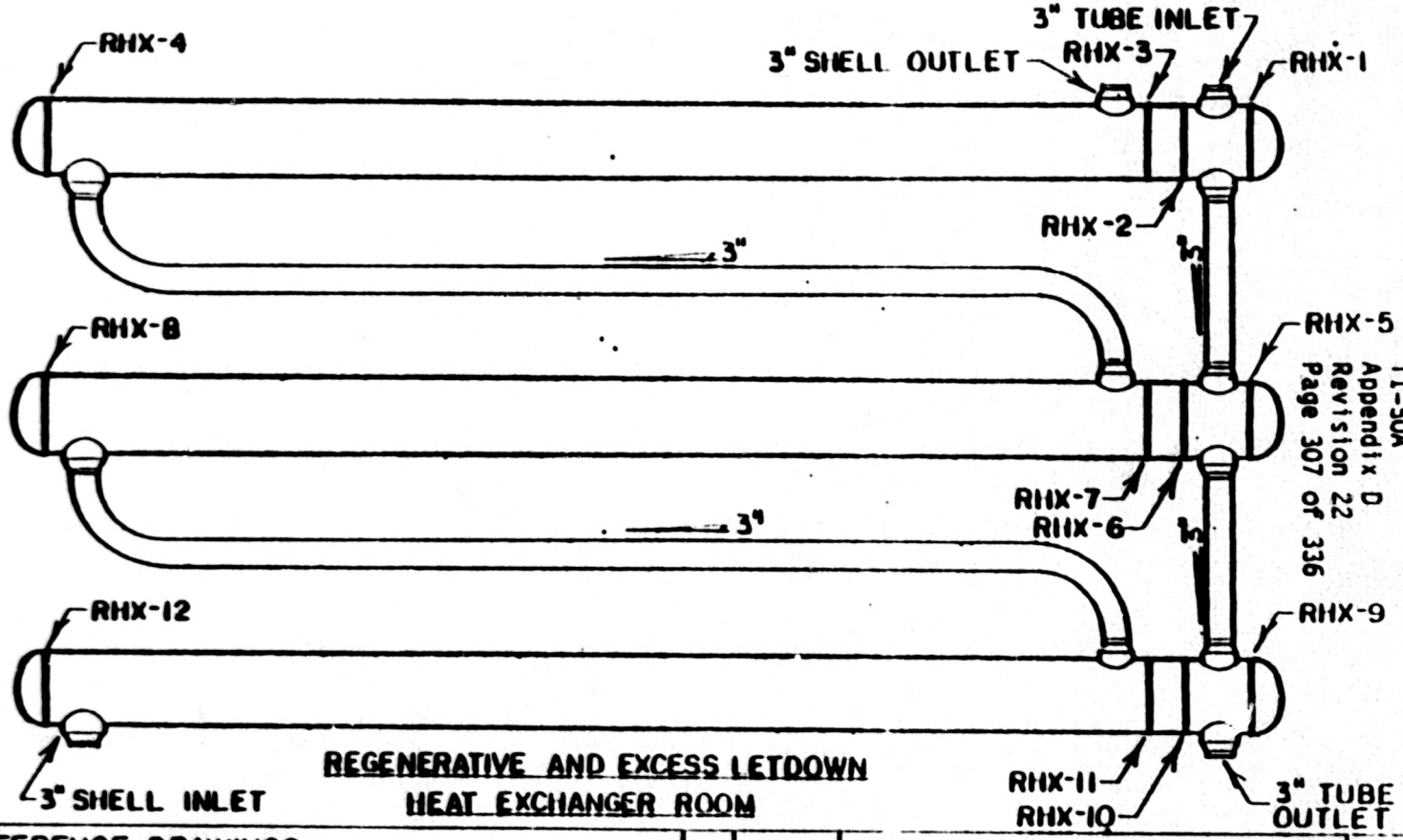

REGENERATIVE AND EXCESS LETDOWN
HEAT EXCHANGER ROOM

WBN
TI-50A
Appendix D
Revision 22
Page 307 of 336

REFERENCE DRAWINGS

5578
5579
5580

MATERIAL SPECIFICATIONS

CLASS 2 ⚠
SHELL
SA 351 CF 8
HEADS
SA 240 TP 304L
TUBE SHEET
SA 182 F 304

NO.	DATE	REVISIONS	CK'D	APP.
1	1-14-84	CHANGED CLASS DESIGNATIONS KEV	KG	

TENNESSEE VALLEY AUTHORITY
DIVISION OF NUCLEAR POWER

WATTS BAR NUCLEAR PLANT
UNITS #1 & #2
REGENERATIVE HEAT EXCHANGER

SCALE NTS | DRAWN KEV | SUBMITTED | APPROVED | DATE 8-5-82 | SHEET 1 OF 1 | ISI-0077 A

R1

REQUEST FOR RELIEF ISI-11

Components: Letdown Heat Exchanger and Excess Letdown Heat Exchanger

Class: ASME Class 2 (TVA Safety Class B)

Inspection Requirement: Volumetric examination of at least 20 percent of each circumferential butt weld (head-to-shell, tube sheet-to-shell) in examination category C-A. This examination shall be uniformly distributed among three areas around the vessel circumference.

Basis for Relief: Twenty percent of the circumferential welds can be examined, however, because of geometrical interference we cannot distribute the examination area uniformly.

Alternate Inspection: The circumferential welds shall be volumetrically examined in all accessible areas. This will exceed the 20 percent examination requirements.

REQUEST FOR RELIEF ISI-12 HAS BEEN WITHDRAWN

REQUEST FOR RELIEF ISI-13

Components: Ultrasonic Examination Techniques of Piping Welds

Class: ASME Class 1 and 2 (TVA Safety Class A and B)

Inspection Requirement: Ultrasonic Examination

Basis for Relief: In accordance with Title 10 of Code of Federal Regulation, Part 50, Section 50.55a, paragraph g(4)(IV), in-service examinations of components, tests of pumps and valves, and system pressure tests, may meet the requirements set forth in subsequent editions and addenda that are incorporated by reference in paragraph (b) of this section, subject to the limitations and modifications listed in paragraph (b) of this section, and subject to Commission approval. Portions of editions or addenda may be used provided that all related requirements of the respective editions or addenda are met.

The Watts Bar Preservice Program is based on 1974 Edition, Summer 1975 Addenda.

The ultrasonic examination technique [IWA-2232(b), IWA-2232(c), and Appendix III] and evaluation (IWA-3000) of piping welds is being updated to the 1977 Edition, Summer 1978 Addenda of ASME Section XI except for Appendix III, Paragraph III-3410 material, III-3430 calibration notches, and III-4450 inaccessible welds. TVA is requesting to update to only portions of the related areas of the respective editions and addenda.

Alternate Inspection: As specified in Request for Relief ISI-1 and ISI4.

REQUEST FOR RELIEF ISI-14

Components: Residual Heat Removal Heat Exchanger

Class: ASME Class 2 (TVA Safety Class B)

Inspection Requirement: Volumetric examination of at least twenty percent of each circumferential butt weld at structural discontinuities in examination category C-A. This examination shall be uniformly distributed among three areas around the vessel circumference.

Basis for Relief: Approximately eighteen percent of weld, RHRHX-2-1A, can be examined due to residual heat removal heat exchanger inlet and outlet nozzle, and the residual heat removal heat exchanger support pad attachment plates. See attached drawing.

The weld had a shop radiographic examination performed in accordance with ASME Section III.

Alternate Inspection: The circumferential weld shall be volumetrically examined in all accessible areas.

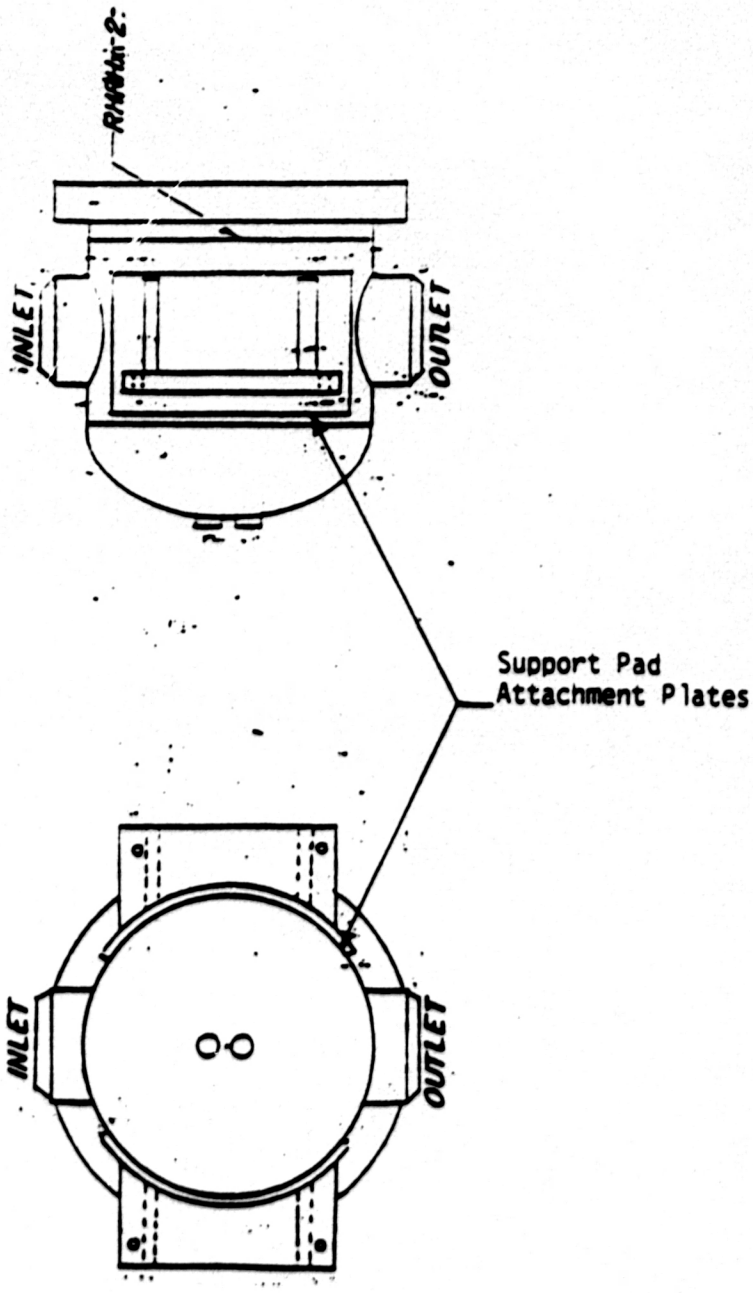
RHR-Un-2
INLET
OUTLET
Support Pad
Attachment Plates
INLET
OUTLET

REQUEST FOR RELIEF ISI-15

Components: Residual Heat Removal Heat Exchanger

Class: ASME Class 2 (TVA Safety Class B)

Inspection Requirement: Volumetric examination shall cover hundred percent of the nozzle-to-vessel attachment weld in examination category C-B.

Basis for Relief: Limited examination due to residual heat removal heat exchanger nozzle geometry, and residual heat removal heat exchanger support pad attachment plates. See welds listed below and attached drawing.

Each weld has a shop radiographic examination performed in accordance with ASME III.

WELD	SCAN/LIMITATION
RHRHX-4-1A	No scan 4/scan 3 limited 60° to 120° and 240° to 300°
RHRHX-3-1B	No scan 4/scan 3 limited 60° to 120° and 240° to 300°

NOTE: Scan 3 and 4 are perpendicular to circumferential welds.

Alternate Inspection: The nozzle-to-vessel attachment welds shall be volumetrically examined in all accessible areas.

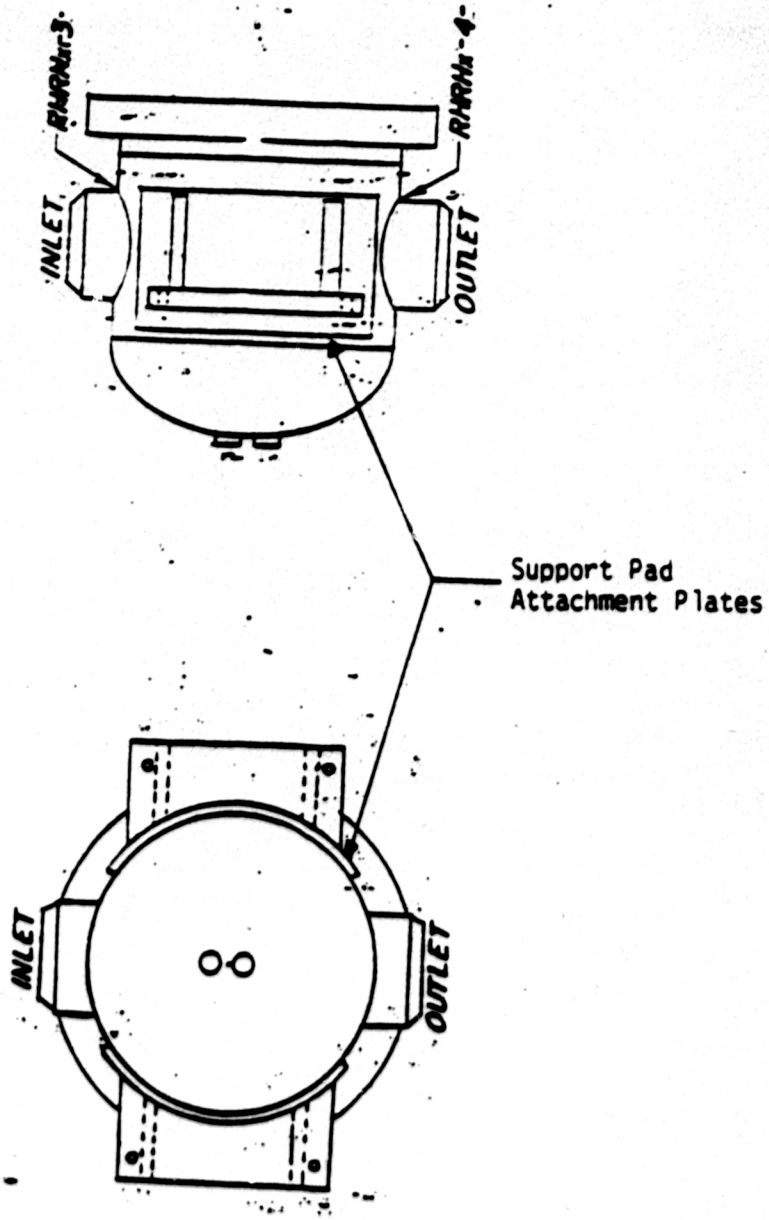
RHRHx-3
RHRHx-4
INLET
OUTLET
Support Pad
Attachment Plates
INLET
OUTLET

NATIONAL BOARD NUMBERS

SYSTEM: 001-MAIN STEAM

TVA COMP. ID	MANUFACTURER	S/N	NAT. BD. NO.
1-FCV-01-011	Atwood-Morrill	1-13824	N/A
N/A	Dravo 01C-SV-11	10051	N/A
N/A	Dravo 01C-SV-24	10052	N/A
N/A	Dravo 01C-SV-37	10053	N/A
N/A	Dravo 01C-SV-50	10054	N/A
1-FCV-01-004	Atwood-Morrill	2-13824	N/A
1-FCV-01-029	Atwood-Morrill	3-13824	N/A
1-FCV-01-022	Atwood-Morrill	4-13824	N/A
N/A	Dravo 01A-MS-001	6833	N/A
N/A	Dravo 01A-MS-002	6834	N/A
N/A	Dravo 01A-MS-003	6835	N/A
N/A	Dravo 01A-MS-004	6836	N/A
N/A	Dravo 01A-MS-007	6837	N/A
N/A	Dravo 01A-MS-015	6839	N/A
N/A	Dravo 01A-MS-016	6840	N/A
N/A	Dravo 01A-MS-017	6841	N/A
N/A	Dravo 01A-MS-018	6842	N/A
N/A	Dravo 01A-MS-032	6844	N/A
N/A	Dravo 01A-MS-033	6845	N/A
N/A	Dravo 01A-MS-034	6846	N/A
N/A	Dravo 01A-MS-035	6847	N/A
N/A	Dravo 01A-MS-036	6848	N/A
N/A	Dravo 01A-MS-050	6850	N/A
N/A	Dravo 01A-MS-051	6851	N/A
N/A	Dravo 01A-MS-052	6852	N/A
N/A	Dravo 01A-MS-053	6853	N/A
N/A	Dravo 01A-MS-152	6855	N/A
N/A	Dravo 01A-MS-153	6856	N/A
N/A	Dravo 01A-MS-154	6857	N/A
N/A	Dravo 01A-MS-155	6858	N/A
1-PCV-01-005	Copes-Vulcan	7520-95337-1-1	776
1-PCV-01-012	Copes-Vulcan	7520-95337-1-2	777
1-PCV-01-023	Copes-Vulcan	7520-95337-1-3	779
1-PCV-01-030	Copes-Vulcan	7520-95337-1-4	780
N/A	Dravo 01A-MS-005	8781	N/A
N/A	Dravo 01A-MS-006	8782	N/A
N/A	Dravo 01A-MS-019	8783	N/A
N/A	Dravo 01A-MS-020	8784	N/A
N/A	Dravo 01A-MS-037	8785	N/A
N/A	Dravo 01A-MS-038	8786	N/A
N/A	Dravo 01A-MS-054	8787	N/A
N/A	Dravo 01A-MS-056	8788	N/A
N/A	Dravo 01A-MS-057	8789	N/A

NATIONAL BOARD NUMBERS

SYSTEM: 001-MAIN STEAM

TVA COMP. ID	MANUFACTURER	S/N	NAT. BD. NO.
1-SFV-01-526	Dresser	BS06215	N/A
1-SFV-01-516	Dresser	BS06217	N/A
1-SFV-01-531	Dresser	BS06218	N/A
1-SFV-01-525	Dresser	BS06223	N/A
1-SFV-01-515	Dresser	BS06225	N/A
1-SFV-01-530	Dresser	BS06226	N/A
1-SFV-01-524	Dresser	BS06231	N/A
1-SFV-01-514	Dresser	BS06233	N/A
1-SFV-01-529	Dresser	BS06234	N/A
1-SFV-01-523	Dresser	BS06239	N/A
1-SFV-01-513	Dresser	BS06241	N/A
1-SFV-01-528	Dresser	BS06242	N/A
1-SFV-01-522	Dresser	BS06247	N/A
1-SFV-01-517	Dresser	BS06248	N/A
1-SFV-01-512	Dresser	BS06249	N/A
1-SFV-01-527	Dresser	BS06250	N/A
1-SFV-01-521	Dresser	BS06216	N/A
1-SFV-01-520	Dresser	BS06224	N/A
1-SFV-01-519	Dresser	BS06232	N/A
1-SFV-01-518	Dresser	BS06240	N/A
1-RIS-01-619	Walworth	D66147	1508
1-RIS-01-620	Walworth	D66211	1565
1-RIS-01-622	Walworth	D66227	1581
1-RIS-01-621	Walworth	D66447	1708
N/A	Tube Turns X-13A	53777	N/A
N/A	Tube Turns X-13B	53778	N/A
N/A	Tube Turns X-13C	53779	N/A
N/A	Tube Turns X-13D	53780	N/A

NATIONAL BOARD NUMBERS

SYSTEM: 003-FEEDWATER

TVA COMP. ID	MANUFACTURER	S/N	NAT. BD. NO.
N/A	Dravo 03A-FW-030	11075	N/A
N/A	Dravo 03A-FW-031	11076	N/A
N/A	Dravo 03A-FW-036	14945	N/A
N/A	Dravo 03A-FW-037	14946	N/A
N/A	Dravo 03A-FW-038	14947	N/A
N/A	Dravo 03A-FW-039	14948	N/A
N/A	Dravo 03A-FW-044	14953	N/A
N/A	Dravo 03A-FW-045	14954	N/A
N/A	Dravo 03A-FW-046	14955	N/A
N/A	Dravo 03A-FW-047	14956	N/A
N/A	Dravo 03A-FW-048	14957	N/A
N/A	Dravo 03A-FW-049	14958	N/A
N/A	Dravo 03A-FW-054	14963	N/A
N/A	Dravo 03A-FW-055	14964	N/A
N/A	Dravo 03A-FW-056	14965	N/A
N/A	Dravo 03A-FW-057	14966	N/A
N/A	Dravo 03A-FW-058	14967	N/A
N/A	Dravo 03A-FW-059	14968	N/A
N/A	Dravo 03A-FW-065	14974	N/A
N/A	Dravo 03A-FW-066	14975	N/A
N/A	Dravo 03A-FW-067	14976	N/A
N/A	Dravo 03A-FW-068	14977	N/A
N/A	Dravo 03B-AF-178	14983	N/A
N/A	Dravo 03B-AF-181	14985	N/A
1-CKV-03-645	Borg-Warner	26305	N/A
1-CKV-03-655	Borg-Warner	26310	N/A
1-CKV-03-652	Borg-Warner	26311	N/A
1-CKV-03-669	Borg-Warner	26312	N/A
1-CKV-03-638	Borg-Warner	26313	N/A
1-CKV-03-656	Borg-Warner	26317	N/A
1-CKV-03-679	Borg-Warner	26318	N/A
1-CKV-03-670	Borg-Warner	26320	N/A
1-CKV-03-644	Borg-Warner	26321	N/A
1-CKV-03-678	Borg-Warner	26322	N/A
N/A	Dravo 03A-FW-001	6859	N/A
N/A	Dravo 03A-FW-003	6861	N/A
N/A	Dravo 03A-FW-005	6863	N/A
N/A	Dravo 03A-FW-006	6864	N/A
N/A	Dravo 03A-FW-007	6865	N/A
N/A	Dravo 03A-FW-008	6866	N/A
N/A	Dravo 03A-FW-010	6868	N/A
N/A	Dravo 03A-FW-012	6870	N/A

NATIONAL BOARD NUMBERS

SYSTEM: 003-FEEDWATER

TVA COMP. ID	MANUFACTURER	S/N	NAT. BD. NO.
N/A	Dravo 03A-FW-013	6871	N/A
N/A	Dravo 03A-FW-015	6873	N/A
N/A	Dravo 03A-FW-016	6874	N/A
N/A	Dravo 03A-FW-017	6875	N/A
N/A	Dravo 03A-FW-018	6876	N/A
N/A	Dravo 03A-FW-020	6878	N/A
N/A	Dravo 03A-FW-021	6879	N/A
N/A	Dravo 03A-FW-022	6880	N/A
N/A	Dravo 03A-FW-023	6881	N/A
N/A	Dravo 03A-FW-024	6882	N/A
N/A	Dravo 03A-FW-025	6883	N/A
N/A	Dravo 03A-FW-026	8570	N/A
N/A	Dravo 03A-FW-027	8571	N/A
N/A	Dravo 03A-FW-028	8572	N/A
N/A	Dravo 03A-FW-029	8573	N/A
1-FCV-03-236	Leslie	D17543-3CEX	N/A
1-FCV-03-239	Leslie	D17543-3CEZ	N/A
1-FCV-03-242	Leslie	D17543-3CFB	N/A
1-FCV-03-245	Leslie	D17543-3CFC	N/A
1-FCV-03-087	Walworth	D66290	1642
1-FCV-03-033	Walworth	D66291	1643
1-FCV-03-047	Walworth	D66292	1644
1-FCV-03-100	Walworth	D66293	1645
1-CKV-03-510	Walworth	D66295	1647
1-CKV-03-511	Walworth	D66296	1648
1-CKV-03-509	Walworth	D66297	1649
1-CKV-03-508	Walworth	D66451	1712
N/A	Tube Turns X-12A	53781	N/A
N/A	Tube Turns X-12B	53782	N/A
N/A	Tube Turns X-12C	53783	N/A
N/A	Tube Turns X-12D	53784	N/A
N/A	Tube Turns X-8A	55504	N/A
N/A	Tube Turns X-8B	55493	N/A
N/A	Tube Turns X-8C	55494	N/A
N/A	Tube Turns X-8D	55505	N/A

NATIONAL BOARD NUMBERS

SYSTEM: 062-CHEMICAL & VOLUME CONTROL SYSTEM

TVA COMP. ID	MANUFACTURER	S/N	NAT. BD. NO.
1-CKV-62-659	Westinghouse	03CS882S710031	W-10328
1-CKV-62-660	Westinghouse	03CS882S710034	W-10331
1-CKV-62-638	Westinghouse	03CS882S710035	W-10332
1-CKV-62-640	Westinghouse	03CS882S710033	W-10330
1-DRV-68-580	Velan	1-678	N/A
1-HTX-62-120	Joseph Oat	2247-2A11	856
1-HTX-62-122	Atlas Mfg.	3142	2520
1-HTX-62-121	Atlas Mfg.	3151	2529
1-FCV-62-84	Fisher	5697030	2116
1-FCV-62-70	Fisher	5737615	2463
1-FCV-62-69	Fisher	5737616	2454
N/A	Dravo 62A-CVC-144	7390	N/A
N/A	Dravo 62A-CVC-145	7391	N/A
N/A	Dravo 62A-CVC-146	7392	N/A
N/A	Dravo 62A-CVC-147	7393	N/A
N/A	Dravo 62A-CVC-148	7394	N/A
N/A	Dravo 62A-CVC-149	7395	N/A
N/A	Dravo 62A-CVC-151	7396	N/A
N/A	Dravo 62A-CVC-152	7397	N/A
N/A	Dravo 62A-CVC-163	7408	N/A
N/A	Dravo 62A-CVC-164	7404	N/A
N/A	Dravo 62A-CVC-171	7416	N/A
N/A	Dravo 62A-CVC-172	7417	N/A
N/A	Dravo 62A-CVC-173	7418	N/A
N/A	Dravo 62A-CVC-174	7419	N/A
N/A	Dravo 62A-CVC-175	7420	N/A
N/A	Dravo 62A-CVC-150	9507	N/A
N/A	Dravo 62A-CVC-176	9508	N/A
N/A	Dravo 62A-CVC-177	9509	N/A
N/A	Dravo 62A-CVC-178	9510	N/A
1-ISV-62-567	Kerotest	JS2-19	N/A
1-ISV-62-564	Kerotest	JS2-2	N/A
1-ISV-62-565	Kerotest	JS2-21	N/A
1-ISV-62-566	Kerotest	JS2-9	N/A
1-CKV-62-562	Kerotest	MA6-11	N/A
1-CKV-62-576	Kerotest	MA6-13	N/A
1-CKV-62-563	Kerotest	MA6-14	N/A
1-CKV-62-578	Kerotest	MA6-22	N/A
1-CKV-62-661	Kerotest	MA6-24	N/A
1-CKV-62-561	Kerotest	MA6-4	N/A
1-CKV-62-560	Kerotest	MA6-6	N/A
1-CKV-62-577	Kerotest	MA6-7	N/A

NATIONAL BOARD NUMBERS

SYSTEM: 062-CHEMICAL & VOLUME CONTROL SYSTEM

TVA COMP. ID	MANUFACTURER	S/N	NAT. BD. NO.
1-CKV-62-579	Kerotest	MA8-11	N/A
1-PMP-62-230A	Gould Pumps	N717B672-1	87
1-PMP-62-232B	Gould Pumps	N717B672-2	88
1-PMP-62-101	Union Pmp Co.	N742885A601	N/A

NATIONAL BOARD NUMBERS

SYSTEM: 063-SAFETY INJECTION SYSTEM

TVA COMP. ID	MANUFACTURER	S/N	NAT. BD. NO.
N/A	Dravo 63-SI-116	10299	N/A
N/A	Dravo 63-SI-117	10300	N/A
N/A	Dravo 63-SI-118	10301	N/A
N/A	Dravo 63-SI-119	10302	N/A
N/A	Dravo 63-SI-120	10303	N/A
N/A	Dravo 63-SI-121	10304	N/A
N/A	Dravo 63-SI-122	10305	N/A
N/A	Dravo 63-SI-123	10306	N/A
N/A	Dravo 63-SI-124	10307	N/A
N/A	Dravo 63-SI-125	10308	N/A
N/A	Dravo 63-SI-126	10309	N/A
N/A	Dravo 63-SI-127	10310	N/A
N/A	Dravo 63-SI-128	10311	N/A
N/A	Dravo 63-SI-129	10312	N/A
N/A	Dravo 63-SI-130	10313	N/A
N/A	Dravo 63-SI-131	10314	N/A
N/A	Dravo 63-SI-132	10315	N/A
N/A	Dravo 63-SI-133	10316	N/A
N/A	Dravo 63-SI-134	10317	N/A
N/A	Dravo 63-SI-135	10318	N/A
N/A	Dravo 63-SI-136	10319	N/A
N/A	Dravo 63-SI-137	10320	N/A
N/A	Dravo 63-SI-138	10321	N/A
N/A	Dravo 63-SI-139	10322	N/A
N/A	Dravo 63-SI-140	10323	N/A
N/A	Dravo 63-SI-141	10324	N/A
N/A	Dravo 63-SI-142	10325	N/A
N/A	Dravo 63-SI-154	10328	N/A
N/A	Dravo 63-SI-155	10329	N/A
N/A	Dravo 63-SI-156	10330	N/A
N/A	Dravo 63-SI-157	10331	N/A
N/A	Dravo 63-SI-158	10332	N/A
N/A	Dravo 63-SI-159	10333	N/A
N/A	Dravo 63-SI-143	10366	N/A
N/A	Dravo 63-SI-144	10367	N/A
N/A	Dravo 63-SI-145	10368	N/A
N/A	Dravo 63-SI-146	10369	N/A
N/A	Dravo 63-SI-147	10370	N/A
N/A	Dravo 63-SI-148	10371	N/A
N/A	Dravo 63-SI-149	10372	N/A
N/A	Dravo 63-SI-150	10373	N/A
N/A	Dravo 63-SI-151	10374	N/A

NATIONAL BOARD NUMBERS

SYSTEM: 063-SAFETY INJECTION SYSTEM

TVA COMP. ID	MANUFACTURER	S/N	NAT. BD. NO.
N/A	Dravo 63-SI-162	10377	N/A
N/A	Dravo 63-SI-163	10378	N/A
N/A	Dravo 63-SI-164	10379	N/A
N/A	Dravo 63-SI-165	10380	N/A
N/A	Dravo 63-SI-166	10381	N/A
N/A	Dravo 63-SI-167	10382	N/A
N/A	Dravo 63-SI-168	10383	N/A
N/A	Dravo 63-SI-169	10384	N/A
N/A	Dravo 63-SI-170	10385	N/A
N/A	Dravo 63-SI-171	10386	N/A
N/A	Dravo 63-SI-176	10391	N/A
N/A	Dravo 63-SI-177	10392	N/A
N/A	Dravo 63-SI-178	10393	N/A
N/A	Dravo 63-SI-179	10394	N/A
N/A	Dravo 63-SI-180	10395	N/A
N/A	Dravo 63-SI-181	10396	N/A
N/A	Dravo 63-SI-182	10397	N/A
N/A	Dravo 63-SI-183	10398	N/A
N/A	Dravo 63-SI-215	10778	N/A
N/A	Dravo 63-SI-216	10779	N/A
N/A	Dravo 63-SI-217	10780	N/A
N/A	Dravo 63-SI-218	10781	N/A
1-63-CKV-623	Westinghouse	10CS880000011	W10413
1-63-CKV-624	Westinghouse	10CS880000014	W10433
1-63-CKV-562	Westinghouse	10CS880000015	W10442
1-63-CKV-625	Westinghouse	10CS880000016	W10443
1-63-CKV-622	Westinghouse	10CS880000020	W11118
1-63-CKV-563	Westinghouse	10CS880000021	W11119
1-63-CKV-561	Westinghouse	10CS880000022	W11120
1-63-CKV-560	Westinghouse	10CS880000023	W11121
1-63-FCV-118	Westinghouse	10GM88FNH001	W10991
1-63-FCV-98	Westinghouse	10GM88FNH002	W11253
1-63-FCV-80	Westinghouse	10GM88FNH003	W11254
1-63-FCV-67	Westinghouse	10GM88FNH004	W11902
N/A	Dravo 63-SI-219	11524	N/A
N/A	Dravo 63-SI-220	11525	N/A
N/A	Dravo 63-SI-221	11526	N/A
1-63-CKV-502	Westinghouse	12CS84000001	W11112
1-63-FCV-1	Westinghouse	14GM84FEB0001	W11954
1-63-THV-582	Borg-Warner	25042	N/A
1-63-THV-584	Borg-Warner	25043	N/A
1-63-THV-585	Borg-Warner	25587	N/A

NATIONAL BOARD NUMBERS

SYSTEM: 063-SAFETY INJECTION SYSTEM

TVA COMP. ID	MANUFACTURER	S/N	NAT. BD. NO.
1-63-THV-583	Borg-Warner	25590	N/A
Accum. #1	Delta Southern	33007-74-1	3548
Accum. #2	Delta Southern	33007-74-2	3549
Accum. #3	Delta Southern	33007-74-3	3550
Accum. #4	Delta Southern	33007-74-4	3551
1-63-CKV-581	Westinghouse	3CS880000036	W-10333
SI PMP 1A-A	Pacific Pumps	49351	108
SI PMP 1B-B	Pacific Pumps	49352	109
1-63-CKV-559	Westinghouse	6CS8800000090	W10407
1-63-CKV-635	Westinghouse	6CS8800000052	W10358
1-63-CKV-632	Westinghouse	6CS8800000053	W10359
1-63-CKV-633	Westinghouse	6CS8800000054	W10360
1-63-CKV-634	Westinghouse	6CS8800000088	W10405
1-63-CKV-558	Westinghouse	6CS8800000089	W10406.
N/A	Dravo 63-SI-37	7580	N/A
N/A	Dravo 63-SI-38	7581	N/A
N/A	Dravo 63-SI-39	7582	N/A
N/A	Dravo 63-SI-41	7584	N/A
N/A	Dravo 63-SI-42	7585	N/A
N/A	Dravo 63-SI-43	7586	N/A
N/A	Dravo 63-SI-60	7603	N/A
N/A	Dravo 63-SI-61	7604	N/A
N/A	Dravo 63-SI-65	7608	N/A
N/A	Dravo 63-SI-66	7609	N/A
N/A	Dravo 63-SI-67	7610	N/A
N/A	Dravo 63-SI-68	7611	N/A
N/A	Dravo 63-SI-69	7612	N/A
N/A	Dravo 63-SI-70	7613	N/A
N/A	Dravo 63-SI-71	7614	N/A
N/A	Dravo 63-SI-75	7618	N/A
N/A	Dravo 63-SI-76	7619	N/A
N/A	Dravo 63-SI-77	7620	N/A
N/A	Dravo 63-SI-78	7621	N/A
N/A	Dravo 63-SI-79	7622	N/A
N/A	Dravo 63-SI-80	7623	N/A
N/A	Dravo 63-SI-81	7624	N/A
N/A	Dravo 63-SI-82	7625	N/A
1-63-FCV-8	Westinghouse	8GM84FEB0003	W10931
1-63-FCV-11	Westinghouse	8GM84FEB0004	W10932
1-63-FCV-94	Westinghouse	8GM88FNB0002	W10855
1-63-FCV-93	Westinghouse	8GM88FNB0001	W10854
1-63-CKV-588	Kerotest	LA1-11	N/A

NATIONAL BOARD NUMBERS

SYSTEM: 063-SAFETY INJECTION SYSTEM

TVA COMP. ID	MANUFACTURER	S/N	NAT. BD. NO.
1-63-CKV-586	Kerotest	LA1-20	N/A
1-63-CKV-589	Kerotest	LA1-24	N/A
1-63-CKV-587	Kerotest	LA1-7	N/A
1-63-CKV-549	Kerotest	LA5-12	N/A
1-63-CKV-543	Kerotest	LA5-14	N/A
1-63-CKV-553	Kerotest	LA5-15	N/A
1-63-CKV-547	Kerotest	LA5-2	N/A
1-63-CKV-555	Kerotest	LA5-23	N/A
1-63-CKV-551	Kerotest	LA5-24	N/A
1-63-CKV-545	Kerotest	LA5-5	N/A
1-63-CKV-557	Kerotest	LA5-9	N/A
1-63-FCV-72	Westinghouse	18GM84FEH001	W17878
1-63-FCV-73	Westinghouse	18GM84FEH002	W17879
1-63-FCV-172	Westinghouse	12GM88SEH003	W11256
1-63-FCV-640	Westinghouse	8CS880000017	W10417
1-63-FCV-641	Westinghouse	6CS880000092	W10409
1-63-FCV-643	Westinghouse	8CS88000003	W10410
1-63-FCV-644	Westinghouse	6CS880000091	W10408
1-063-PEN-X-20A	Tube Turns X-20A	53795	N/A
1-063-PEN-X-20B	Tube Turns X-20B	53796	N/A

NATIONAL BOARD NUMBERS

SYSTEM: 068-REACTOR COOLANT SYSTEM

TVA COMP. ID	MANUFACTURER	S/N	NAT. BD. NO.
1-068-SGEN-SG1	Westinghouse	1591	W10286
1-068-SGEN-SG2	Westinghouse	1592	W10287
1-068-SGEN-SG3	Westinghouse	1593	W10288
1-068-SGEN-SG4	Westinghouse	1594	W10289
1-068-PRES-PR	Westinghouse	1601	W10792
1-068-ISV-519	Westinghouse	3GH880000082	W10864
1-068-ISV-530	Westinghouse	3GH880000083	W10865
1-068-ISV-514	Westinghouse	3GH880000084	W10866
1-068-ISV-508	Westinghouse	3GH880000085	W10867
1-068-ISV-54'	Westinghouse	3GH880000089	W10871
1-068-ISV-536	Westinghouse	3GH880000090	W10872
1-068-ISV-525	Westinghouse	3GH880000098	W10953
1-068-ISV-547	Westinghouse	3GH880000099	W10954
1-068-FCV-332	Westinghouse	3GH88FNH02	W10877
1-068-FCV-333	Westinghouse	3GM88FNH01	W10876
1-068-PCV-340B	Fisher	5909465	2752
1-068-PCV-340D	Fisher	5909466	2753
1-068-PCV-334	Fisher	5916726	N/A
1-068-PCV-340A	Fisher	5916727	N/A
1-068-PMP-8	ESCO (for W)	923	None Supplied
1-068-PMP-31	ESCO (for W)	924	None Supplied
1-068-PMP-50	ESCO (for W)	925	None Supplied
1-068-PMP-73	ESCO (for W)	926	None Supplied
N/A	Dravo 68-RC-01	9461	N/A
N/A	Dravo 68-RC-04	9464	N/A
N/A	Dravo 68-RC-05	9465	N/A
N/A	Dravo 68-RC-06	9466	N/A
N/A	Dravo 68-RC-07	9467	N/A
N/A	Dravo 68-RC-08	9468	N/A
N/A	Dravo 68-RC-09	9469	N/A
N/A	Dravo 68-RC-10	9470	N/A
N/A	Dravo 68-RC-11	9471	N/A
N/A	Dravo 68-RC-12	9472	N/A
N/A	Dravo 68-RC-13	M0727	N/A
N/A	Dravo 68-RC-14	9474	N/A
N/A	Dravo 68-RC-15	9475	N/A
N/A	Dravo 68-RC-16	9476	N/A
N/A	Dravo 68-RC-17	9477	N/A
N/A	Dravo 68-RC-18	9478	N/A
N/A	Dravo 68-RC-19	9479	N/A
N/A	Dravo 68-RC-20	9480	N/A
N/A	Dravo 68-RC-21	9481	N/A

NATIONAL BOARD NUMBERS

SYSTEM: 068-REACTOR COOLANT SYSTEM

TVA COMP. ID	MANUFACTURER	S/N	NAT. BD. NO.
N/A	Dravo 68-RC-22	9482	N/A
N/A	Dravo 68-RC-23	9483	N/A
N/A	Dravo 68-RC-24	9484	N/A
N/A	Dravo 68-RC-25	9485	N/A
N/A	Dravo 68-RC-27	9487	N/A
N/A	Dravo 68-RC-28	9488	N/A
N/A	Dravo 68-RC-29	9489	N/A
N/A	Dravo 68-RC-30	9490	N/A
N/A	Dravo 68-RC-31	9491	N/A
N/A	Dravo 68-RC-32	9492	N/A
N/A	Dravo 68-RC-33	9493	N/A
N/A	Dravo 68-RC-34	9494	N/A
N/A	Dravo 68-RC-35	9495	N/A
N/A	Dravo 68-RC-36	9496	N/A
1-68-ISV-515	Kerotest	DG-8-22	N/A
1-68-DRV-582	Kerotest	HX2-10	N/A
1-68-ISV-520	Kerotest	HX2-11	N/A
1-68-ISV-535	Kerotest	HX2-16	N/A
1-68-ISV-524	Kerotest	HX2-2	N/A
1-68-DRV-553	Kerotest	HX2-20	N/A
1-68-ISV-509	Kerotest	HX2-3	N/A
1-68-DRV-550	Kerotest	HX2-4	N/A
1-68-DRV-549	Kerotest	HX2-5	N/A
1-68-ISV-513	Kerotest	HX2-8	N/A
1-68-ISV-505	Kerotest	HX7-14	N/A
1-68-ISV-526	Kerotest	HX7-7	N/A
1-68-ISV-531	Kerotest	HX7-8	N/A
1-68-ISV-542	Kerotest	HX2-21	N/A
1-68-ISV-543	Kerotest	HX7-11	N/A
1-68-ISV-537	Kerotest	HX7-9	N/A
1-68-ISV-510	Kerotest	KP2-20	N/A
1-68-ISV-521	Kerotest	KP22-23	N/A
1-68-DRV-581	Kerotest	KP26-19	N/A
1-68-DRV-554	Kerotest	KP26-20	N/A
1-68-ISV-504	Kerotest	KP4-24	N/A
1-68-ISV-532	Kerotest	KP7-20	N/A
1-68-ISV-516	Kerotest	KP7-9	N/A
1-68-DRV-558	Kerotest	KP10-22	N/A
1-68-DRV-557	Kerotest	KP22-24	N/A
1-68-ISV-546	Kerotest	KP7-1	N/A
1-68-ISV-538	Kerotest	KP7-12	N/A
1-68-ISV-527	Kerotest	MC5-6	N/A

NATIONAL BOARD NUMBERS

SYSTEM: 068-REACTOR COOLANT SYSTEM

TVA COMP. ID	MANUFACTURER	S/N	NAT. BD. NO.
1-68-RFV-563	Crosby	N56964-06-0029	905
1-68-RFV-564	Crosby	N56964-06-0033	201
1-67-RFV-565	Crosby	N56964-06-0034	907
N/A	Southwest FAB WAT-Loop 1-3	11503	N/A
N/A	Southwest FAB WAT-Loop 1-4	11504	N/A
N/A	Southwest FAB WAT-Loop 2-3	11505	N/A
N/A	Southwest FAB WAT-Loop 2-4	11506	N/A
N/A	Southwest FAB WAT-Loop 3-3	11507	N/A
N/A	Southwest FAB WAT-Loop 3-4	11508	N/A
N/A	Southwest FAB WAT-Loop 4-3	11509	N/A
N/A	Southwest FAB WAT-Loop 4-4	11510	N/A
N/A	Southwest FAB WAT-Surge-1	4221	N/A
N/A	Southwest FAB WAT-Surge-2	4222	N/A
N/A	Southwest FAB WAT-Loop 1-1	4251	N/A
N/A	Southwest FAB WAT-Loop 3-1	4252	N/A
N/A	Southwest FAB WAT-Loop 2-1	4467	N/A
N/A	Southwest FAB WAT-Loop 4-1	4468	N/A
N/A	Southwest FAB WAT-Loop 1-5	4622	N/A
N/A	Southwest FAB WAT-Loop 2-5	4623	N/A
N/A	Southwest FAB WAT-Loop 3-5	4624	N/A
N/A	Southwest FAB WAT-Loop 4-5	4625	N/A
N/A	Southwest FAB WAT-Loop 3-2	82485-2	N/A
N/A	Southwest FAB WAT-Loop 2-2	83976-1	N/A
N/A	Southwest FAB WAT-Loop 4-2	84141-1	N/A
N/A	Southwest FAB WAT-Loop 1-2	85305-1	N/A

NATIONAL BOARD NUMBERS

SYSTEM: 072-CONTAINMENT SPRAY

TVA COMP. ID	MANUFACTURER	S/N	NAT. BD. NO.
1-72-FCV-040	Westinghouse	0800GM84FEB00B00S710005	W12192
1-72-FCV-041	Westinghouse	0800GM84FEB00B00S710005	W12193

NATIONAL BOARD NUMBERS

SYSTEM: 074-RESIDUAL HEAT REMOVAL

TVA COMP. ID	MANUFACTURER	S/N	NAT. BD. NO.
1-074-HTX-01/1A	Eng & Fab, Inc.	S-17811-A	1558
1-074-HTX-01/1B	Eng & Fab, Inc.	S-17811-B	1559
N/A	Dravo 74-RHR-003	6733	N/A
N/A	Dravo 74-RHR-006	6736	N/A
N/A	Dravo 74-RHR-007	6737	N/A
N/A	Dravo 74-RHR-008	6738	N/A
N/A	Dravo 74-RHR-009	6739	N/A
N/A	Dravo 74-RHR-010	6740	N/A
N/A	Dravo 74-RHR-011	6741	Nonpp-1
N/A	Dravo 74-RHR-012	6742	N/A
N/A	Dravo 74-RHR-013	6743	N/A
N/A	Dravo 74-RHR-014	6744	N/A
N/A	Dravo 74-RHR-015	6745	N/A
N/A	Dravo 74-RHR-016	6746	N/A
N/A	Dravo 74-RHR-017	6747	N/A
N/A	Dravo 74-RHR-018	6748	N/A
N/A	Dravo 74-RHR-019	6749	N/A
N/A	Dravo 74-RHR-020	6750	N/A
N/A	Dravo 74-RHR-021	6751	N/A
N/A	Dravo 74-RHR-022	6752	N/A
N/A	Dravo 74-RHR-023	6753	N/A
N/A	Dravo 74-RHR-024	6754	N/A
N/A	Dravo 74-RHR-025	6755	N/A
N/A	Dravo 74-RHR-026	6756	N/A
N/A	Dravo 74-RHR-027	6757	N/A
N/A	Dravo 74-RHR-028	6758	N/A
N/A	Dravo 74-RHR-029	6759	N/A
N/A	Dravo 74-RHR-030	6760	N/A
N/A	Dravo 74-RHR-031	6761	N/A
N/A	Dravo 74-RHR-032	6762	N/A
N/A	Dravo 74-RHR-033	6763	N/A
N/A	Dravo 74-RHR-034	6764	N/A
N/A	Dravo 74-RHR-035	6765	N/A
N/A	Dravo 74-RHR-036	6766	N/A
N/A	Dravo 74-RHR-037	6767	N/A
N/A	Dravo 74-RHR-038	6768	N/A
N/A	Dravo 74-RHR-039	6769	N/A
N/A	Dravo 74-RHR-040	6770	N/A
N/A	Dravo 74-RHR-041	6771	N/A
N/A	Dravo 74-RHR-042	6772	N/A
N/A	Dravo 74-RHR-043	6773	N/A
N/A	Dravo 74-RHR-047	6777	N/A

NATIONAL BOARD NUMBERS

SYSTEM: 074-RESIDUAL HEAT REMOVAL

TVA COMP. ID	MANUFACTURER	S/N	NAT. BD. NO.
N/A	Dravo 74-RHR-048	6778	N/A
N/A	Dravo 74-RHR-049	6779	N/A
N/A	Dravo 74-RHR-050	6780	N/A
N/A	Dravo 74-RHR-051	6781	N/A
N/A	Dravo 74-RHR-052	6782	N/A
N/A	Dravo 74-RHR-053	6783	N/A
N/A	Dravo 74-RHR-054	6784	N/A
N/A	Dravo 74-RHR-055	6785	N/A
N/A	Dravo 74-RHR-064	6794	N/A
N/A	Dravo 74-RHR-065	6795	N/A
N/A	Dravo 74-RHR-066	6796	N/A
N/A	Dravo 74-RHR-067	6797	N/A
N/A	Dravo 74-RHR-068	6798	N/A
N/A	Dravo 74-RHR-069	6799	N/A
N/A	Dravo 74-RHR-070	6800	N/A
N/A	Dravo 74-RHR-071	6801	N/A
N/A	Dravo 74-RHR-072	6802	N/A
N/A	Dravo 74-RHR-073	6803	N/A
N/A	Dravo 74-RHR-074	6804	N/A
N/A	Dravo 74-RHR-075	6805	N/A
N/A	Dravo 74-RHR-076	6806	N/A
N/A	Dravo 74-RHR-077	6807	N/A
N/A	Dravo 74-RHR-078	6808	N/A
N/A	Dravo 74-RHR-079	6809	N/A
N/A	Dravo 74-RHR-080	6810	N/A
N/A	Dravo 74-RHR-081	6811	N/A
N/A	Dravo 74-RHR-082	6812	N/A
N/A	Dravo 74-RHR-083	6813	N/A
N/A	Dravo 74-RHR-084	6814	N/A
N/A	Dravo 74-RHR-085	6815	N/A
N/A	Dravo 74-RHR-086	6816	N/A
N/A	Dravo 74-RHR-087	6817	N/A
N/A	Dravo 74-RHR-088	6818	N/A
N/A	Dravo 74-RHR-089	6819	N/A
N/A	Dravo 74-RHR-090	6820	N/A
N/A	Dravo 74-RHR-091	6821	N/A
N/A	Dravo 74-RHR-092	6822	N/A
N/A	Dravo 74-RHR-093	6823	N/A
N/A	Dravo 74-RHR-094	6824	N/A
N/A	Dravo 74-RHR-095	6825	N/A
N/A	Dravo 74-RHR-096	6826	N/A
N/A	Dravo 74-RHR-097	6827	N/A

NATIONAL BOARD NUMBERS

SYSTEM: 074-RESIDUAL HEAT REMOVAL

TVA COMP. ID	MANUFACTURER	S/N	NAT. BD. NO.
N/A	Dravo 74-RHR-098	6828	N/A
N/A	Dravo 74-RHR-099	6829	N/A
N/A	Dravo 74-RHR-100	6830	N/A
N/A	Dravo 74-RHR-101	6831	N/A
N/A	Dravo 74-RHR-102	6832	N/A
1-74-PMP-10-A	Ingersoll Rand	67470	78
1-74-PMP-20-B	Ingersoll Rand	67471	79
1-74-FCV-9	Westinghouse	10GM88SEH0003	W14312
1-74-FCV-8	Westinghouse	10GM88SEH0004	W14313
1-74-FCV-3	Westinghouse	14GM84FEH0001	W11192
1-74-FCV-21	Westinghouse	14GM84FEH0002	W11193
1-74-FCV-2	Westinghouse	14GM88SEH0001	W11959
1-74-FCV-1	Westinghouse	14GM88SEH0002	W11960
1-74-CKV-514	Westinghouse	8CS840000005	W10347
1-74-CKV-515	Westinghouse	8CS840000006	W10354
1-74-HCV-34	Westinghouse	8GH840000008	W10913
1-74-ISV-525	Westinghouse	8GH840000009	W10914
1-74-ISV-524	Westinghouse	8GH840000010	W10915
1-74-HCV-037	Westinghouse	8GH840000011	W10916
1-74-HCV-036	Westinghouse	8GH840000012	W10938
1-74-ISV-521	Westinghouse	8GH840000014	W10388
1-74-ISV-520	Westinghouse	8GH840000015	W10981
1-74-FCV-35	Westinghouse	8GM84FEB0001	W10929
1-74-FCV-33	Westinghouse	8GM84FEB0002	W10994
1-74-FCV-16	Westinghouse	8F207887	3390
1-74-FCV-22	Westinghouse	8F207888	3391
1-74-FCV-28	Westinghouse	8F207889	3392
N/A	Tube Turns K-14	53836	N/A
N/A	Tube Turns K-15	53837	N/A
N/A	Tube Turns X-17	53785	N/A
N/A	Tube Turns X-107	53786	N/A

NATIONAL BOARD NUMBERS

SYSTEM: 085-CONTROL ROD DRIVE MECH.

TVA COMP. ID	MANUFACTURER	S/N	NAT. BD. NO.
1-085-W001-H8	Westinghouse	01-115E238G03	None Supplied
1-085-W001-E5	Westinghouse	01-934D129G01	None Supplied
1-085-W001-K6	Westinghouse	02-115E238G03	None Supplied
1-085-W001-E11	Westinghouse	02-934D129G01	None Supplied
1-085-W001-N5	Westinghouse	03-115E238G03	None Supplied
1-085-W001-L11	Westinghouse	03-934D129G01	None Supplied
1-085-W001-E13	Westinghouse	04-115E238G03	None Supplied
1-085-W001-C5	Westinghouse	04-934D129G01	None Supplied
1-085-W001-B10	Westinghouse	05-115E238G03	None Supplied
1-085-W001-B8	Westinghouse	06-115E238G03	None Supplied
1-085-W001-H2	Westinghouse	07-115E238G03	None Supplied
1-085-W001-E3	Westinghouse	08-115E238G03	None Supplied
1-085-W001-F2	Westinghouse	09-115E238G03	None Supplied
1-085-W001-D2	Westinghouse	10-115E238G03	None Supplied
1-085-W001-G3	Westinghouse	11-115E238G03	None Supplied
1-085-W001-B12	Westinghouse	12-115E238G03	None Supplied
1-085-W001-B6	Westinghouse	13-115E238G03	None Supplied
1-085-W001-M4	Westinghouse	14-115E238G03	None Supplied
1-085-W001-P10	Westinghouse	15-115E238G03	None Supplied
1-085-W001-N9	Westinghouse	16-115E238G03	None Supplied
1-085-W001-P8	Westinghouse	17-115E238G03	None Supplied
1-085-W001-N7	Westinghouse	18-115E238G03	None Supplied
1-085-W001-C5	Westinghouse	19-115E238G03	None Supplied
1-085-W001-F14	Westinghouse	20-115E238G03	None Supplied
1-085-W001-B4	Westinghouse	21-115E238G03	None Supplied
1-085-W001-G13	Westinghouse	22-115E238G03	None Supplied
1-085-W001-D4	Westinghouse	23-115E238G03	None Supplied
1-085-W001-P6	Westinghouse	24-115E238G03	None Supplied
1-085-W001-K14	Westinghouse	25-115E238G03	None Supplied
1-085-W001-F10	Westinghouse	26-115E238G03	None Supplied
1-085-W001-H10	Westinghouse	27-115E238G03	None Supplied
1-085-W001-K8	Westinghouse	28-115E238G03	None Supplied
1-085-W001-C7	Westinghouse	29-115E238G03	None Supplied
1-085-W001-P12	Westinghouse	30-115E238G03	None Supplied
1-085-W001-D14	Westinghouse	31-115E238G03	None Supplied
1-085-W001-H4	Westinghouse	32-115E238G03	None Supplied
1-085-W001-L13	Westinghouse	33-115E238G03	None Supplied
1-085-W001-D8	Westinghouse	34-115E238G03	None Supplied
1-085-W001-M14	Westinghouse	35-115E238G03	None Supplied
1-085-W001-N11	Westinghouse	36-115E238G03	None Supplied
1-085-W001-F6	Westinghouse	37-115E238G03	None Supplied
1-085-W001-K2	Westinghouse	38-115E238G03	None Supplied

NATIONAL BOARD NUMBERS

SYSTEM: 085-CONTROL ROD DRIVE MECH.

TVA COMP. ID	MANUFACTURER	S/N	NAT. BD. NO.
1-085-W001-J3	Westinghouse	39-115E238G03	None Supplied
1-085-W001-M8	Westinghouse	40-115E238G03	None Supplied
1-085-W001-H12	Westinghouse	41-115E238G03	None Supplied
1-085-W001-D12	Westinghouse	42-115E238G03	None Supplied
1-085-W001-L3	Westinghouse	43-115E238G03	None Supplied
1-085-W001-H14	Westinghouse	44-115E238G03	None Supplied
1-085-W001-J13	Westinghouse	45-115E238G03	None Supplied
1-085-W001-K10	Westinghouse	46-115E238G03	None Supplied
1-085-W001-H6	Westinghouse	47-115E238G03	None Supplied
1-085-W001-P4	Westinghouse	48-115E238G03	None Supplied
1-085-W001-F8	Westinghouse	49-115E238G03	None Supplied
1-085-W001-C11	Westinghouse	50-115E238G03	None Supplied
1-085-W001-M12	Westinghouse	51-115E238G03	None Supplied
1-085-W001-M2	Westinghouse	52-115E238G03	None Supplied
1-085-W001-C9	Westinghouse	53-115E238G03	None Supplied
1-085-W001-E5A	Westinghouse	54-115E238G03	None Supplied
1-085-W001-L5A	Westinghouse	55-115E238G03	None Supplied
1-085-W001-L11A	Westinghouse	56-115E238G03	None Supplied
1-085-W001-E11A	Westinghouse	57-115E238G03	None Supplied
1-085-W001-M6	Royal	RA71-004	255
1-085-W001-F12	Royal	RA72-070	256
1-085-W001-M10	Royal	RA72-083	249
1-085-W001-D10	Royal	RA73-108	250
1-085-W001-D6	Royal	RA73-110	251
1-085-W001-K4	Royal	RA73-111	252
1-085-W001-F4	Royal	RA73-112	253
1-085-W001-K12	Royal	RA73-113	254

APPENDIX F
FIELD CORRECTED DRAWING(S) TRANSMITTAL

TO: NDE Section XI Programs,
MQA, Chattanooga

Transmittal Number: _____ - _____
(Year) (Sequential)

Plant: WBN

Unit/Outage or Date: _____

The drawing(s) listed below from TI-50A have been field marked with variations in configuration which were discovered during the course of inservice or preservice examinations. Please revise the controlled copy of this/these drawing(s) in the TI prior to the next refueling outage.

1. _____
2. _____
3. _____
4. _____
5. _____
6. _____
7. _____
8. _____
9. _____
10. _____
11. _____
12. _____

Signature of Examiner/Date _____

Signature of Field Supervisor _____

APPENDIX G

NOTIFICATION OF INDICATION (NOI) TRENDING

Prior to closure of the WBN Unit 1 PSI Program, the NOIs generated during the preservice examinations shall be trended to evaluate for any generic manufacturing/installation indications. The NOIs used for trending shall be the NOIs written on unacceptable indications of components within the scope of ASME Section XI and which are part of the initial preservice examination. NOIs that are deemed acceptable for use due to some "other" information shall not be utilized for trending. The PRISIM data base will be utilized to trend the NOIs.

The following steps are to be used for trending of the NOIs.

(1) Obtain from NDE Data Management a sort of the NOIs by indication type. The indication type listing is given in table 1 of this appendix. This listing may not be all inclusive.

(2) The NOIs should then be grouped in families of components by size, design, system, and code class.

(3) Within each family of components, a potential adverse trend should be established with a minimum of four NOIs of indication type A in Table 1 and with a minimum of six NOIs of indication type B in Table 1.

(4) The potential adverse trend deficiencies shall be reviewed to determine if it is an adverse trend.

(5) If it is determined an adverse trend exists, a CAQR shall be written in accordance with AI-2.8.14.

(6) The results of this review shall be documented and included in the PSI report.

APPENDIX G

TABLE 1

Indication Type A

- Cracked Welds
- Flaw Indications Evaluation as Acceptable For Use
- Abnormal Wear
- Abnormal Corrosion
- Abnormal Erosion
- Missing Pressure Retaining Parts
- Abnormally Bent Rods/Parts
- Indications Requiring Weld Repair

Indication Type B

- Missing Lockwire
- Broken Lockwire
- Loose Nuts
- Out of Range
- Lack of Freedom of Motion
- Surface Corrosion
- Missing Parts