3.7 Power Transmission System

This section identifies the components and activities necessary to complete an interface between STP 3 & 4 and STP 1 & 2 and ties to the regional power grid. These components include:

(1) A new 345kV switchyard for STP 3 & 4

(2) A 345kV tie-line from STP 1 & 2 to the new 345kV switchyard

(3) Five existing transmission lines that are redirected into the STP 3 & 4 345kV switchyard

The activities will primarily involve construction on the STP site property, except for the upgrading of two existing transmission lines that lead towards the Hillje substation.

3.7.1 Power Transmission System Components

The following describes the power transmission system components, system component ownership, and the applicable state of Texas regulations governing transmission system design, construction, and operations.

3.7.1.1 System Components

Nine existing regional 345kV transmission lines connect to the STP 1 & 2 switchyard. Transmission configuration maps showing the STP site and region are included in Figures 3.7-1, 3.7-2, 3.7-3, and 3.7-4. The power transmission system for STP 3 & 4 uses five of the nine 345kV power transmission lines that now connect to STP 1 & 2. The air-insulated 345kV breaker-and-a-half STP 3 & 4 switchyard interconnects the STP 3 & 4 generating units to the transmission lines. Refer to Figure 3.7-5 for transmission configuration for both STP 1 & 2 and STP 3 & 4.

One transmission line connecting STP 3 & 4 to the offsite power transmission system is the Blessing 44 345kV power transmission line, which currently connects the STP 1 & 2 switchyard to the Blessing Substation. The only modifications to the Blessing 44 345kV power transmission line would be the construction on the STP site to redirect this transmission line to the STP 3 & 4 switchyard and its use as part of the tie-line between the STP 1 & 2 switchyard and the STP 3 & 4 switchyard.

There will be one underground 345kV power line that runs east from the STP 3 & 4 switchyard and interconnects on STP property to an existing 345kV overhead transmission line designated as Dow 27. All of these modifications will be on the STP site.

The three remaining transmission lines connecting to STP 3 & 4 run northwest toward the Hillje substation on an existing 400-foot-wide right-of-way that they also share with three existing transmission lines that will continue to connect to STP 1 & 2. Two of the six existing transmission lines will be upgraded over the approximate 20 miles from the STP site to the Hillje substation. In the upgrades, the conductors of the two transmission lines from the STP site to the Hillje substation will be replaced with conductors appropriate to accommodate the additional load as a result of STP 3 & 4.

Some of the transmission line towers also will be replaced as necessary to support the replacement conductors. No new rights-of-way would be required off the STP site.

3.7.1.2 Transmission Line Owners' Work Activities and Responsibilities

The owners and operators of the five transmission lines are identified in Table 3.7-1. The work to upgrade two of the lines will be the responsibility of American Electric Power (AEP) and CenterPoint Energy (CNP), which are the transmission service providers that own these transmission lines.

AEP will take the lead role to plan with CNP the construction activity to upgrade their respective transmission lines. AEP will continue to operate and maintain their respective transmission lines after they are upgraded. STPNOC understands that the detailed design and construction will be done close to the time the upgrades need to be in service, and likely not before 2011.

Transmission service providers in the Electric Reliability Council of Texas (ERCOT) region are subject to regulations of the Public Utility Commission of Texas (PUCT) that require new transmission facilities or interconnections to use the alternative means of providing the transmission service that are least costly, operationally sound, and relieve the transmission constraint at least as effectively as would additional transmission facilities. (Reference 3.7-1). In accordance with PUCT requirements, an interconnection study was prepared by the transmission service providers in 2007 regarding power transmission options for STP 3 & 4. (Reference 3.7-2). This power transmission system description is based, in large part, on the TSP's study.

The PUCT regulations provide that PUCT review is not necessarily required for rebuilding, replacing, or respacing of structures along an existing route of the transmission line or bundling of conductors or reconductoring of an existing transmission facility, when no additional right-of-way is required. (Reference 3.7-1). Nevertheless, the PUCT regulations impose standards of construction and operation of transmission facilities, which state that rebuilding, upgrading, or relocation of existing electric transmission facilities shall comply with the PUCT standards of construction and operation, and that in determining standard practice, the PUCT shall be guided by the provisions of the American National Standards Institute, Incorporated, the National Electrical Safety Code (NESC) (Reference 3.7-3), and such other applicable codes and standards that are generally accepted by the industry, except as modified by PUCT. AEP and CNP are required to construct, install, operate, and maintain their respective transmission lines in accordance with the NESC, and in such manner to best accommodate the public. In rebuilding or upgrading existing electric transmission facilities, AEP and CNP are directed to implement mitigation measures adapted to the specifics of each project in accordance with 16 TAC ~~101(d)~~25.101(d) (Reference 3.7-1), and may include such requirements as:

- Selective clearing of the right-of-way to minimize the amount of flora and fauna disturbed
- Implementation of erosion control measures

- Reclamation of construction sites with native species of grasses, forbs, and shrubs.
- Returning site to its original contours and grades.

All existing transmission service providers' 345kV transmission lines are currently constructed with steel towers to provide clearances consistent with the NESC (Reference 3.7-3). Therefore, STPNOC anticipates that the transmission service providers will construct the new 345kV towers for the transmission lines servicing the STP 3 & 4 345kV switchyard using the utility standard-type steel towers with design providing clearances consistent with the NESC. At a minimum, all clearances for high-voltage conductors above grade would equal or exceed present clearances. The 345kV transmission lines are bundle-type conductors in groups of two. This conductor configuration will be implemented for the new transmission lines. Transmission lines crossing roads and railroads will comply with the NESC requirements. The design of all existing towers includes grounding methods with either ground rods or a counterpoise ground system. It is anticipated that all new transmission line towers will be grounded using the same grounding methods.

The addition of STP 3 & 4 will not require any significant changes to the current practices for maintenance of the rights-of-way, including vegetation management for the transmission system.

3.7.2 Switchyard Description

The STP 3 & 4 345kV switchyard will be provided to accommodate the new units. The location of this new switchyard will be on the STP site approximately 650 feet north of STP 3 & 4. The design of the switchyard will be consistent with a standard breaker-and-a-half scheme, and will include seven bays in the configuration. The STP 3 & 4 switchyard is shown on Figure 3.7-5.

The physical arrangement of the STP 3 & 4 345kV switchyard will accommodate space for servicing STP 3 & 4 and the tie-ins to the existing outgoing transmission lines from STP 1 & 2. The existing transmission lines and switchyard presently servicing STP 1 & 2 will require modification to facilitate the tie-ins and interface with the new STP 3 & 4 switchyard.

The STP 3 & 4 Main Power Transformers and the Reserve Auxiliary Transformers tie-lines head north and connect to the STP 3 & 4 switchyard as shown on Figure 3.7-5.

3.7.3 References

3.7-1 Texas Administrative Code, Chapter 16, Section ~~101(d)~~25.101(d), and 25.195(c).

3.7-2 "Interconnection Study for New Generation in Matagorda County," American Electric Power Service Corporation, CenterPoint Energy Houston Electric, LLC, CPS Energy, and Austin Energy, Interim Report for Generation 15INR008, June, 2007.

3.7-3 National Electrical Safety Code (NESC 2005).

Table 3.7-1 STP 3 & 4 Transmission Line Owners

Transmission Line	Ownership	Nominal Rating
Elm Creek 27	CPS Energy	345kV
Hillje 44	CNP	345kV
White Point 39	AEP	345kV
DOW 27	CNP	345kV
Blessing 44	AEP	345kV

Source: Reference 3.7-2

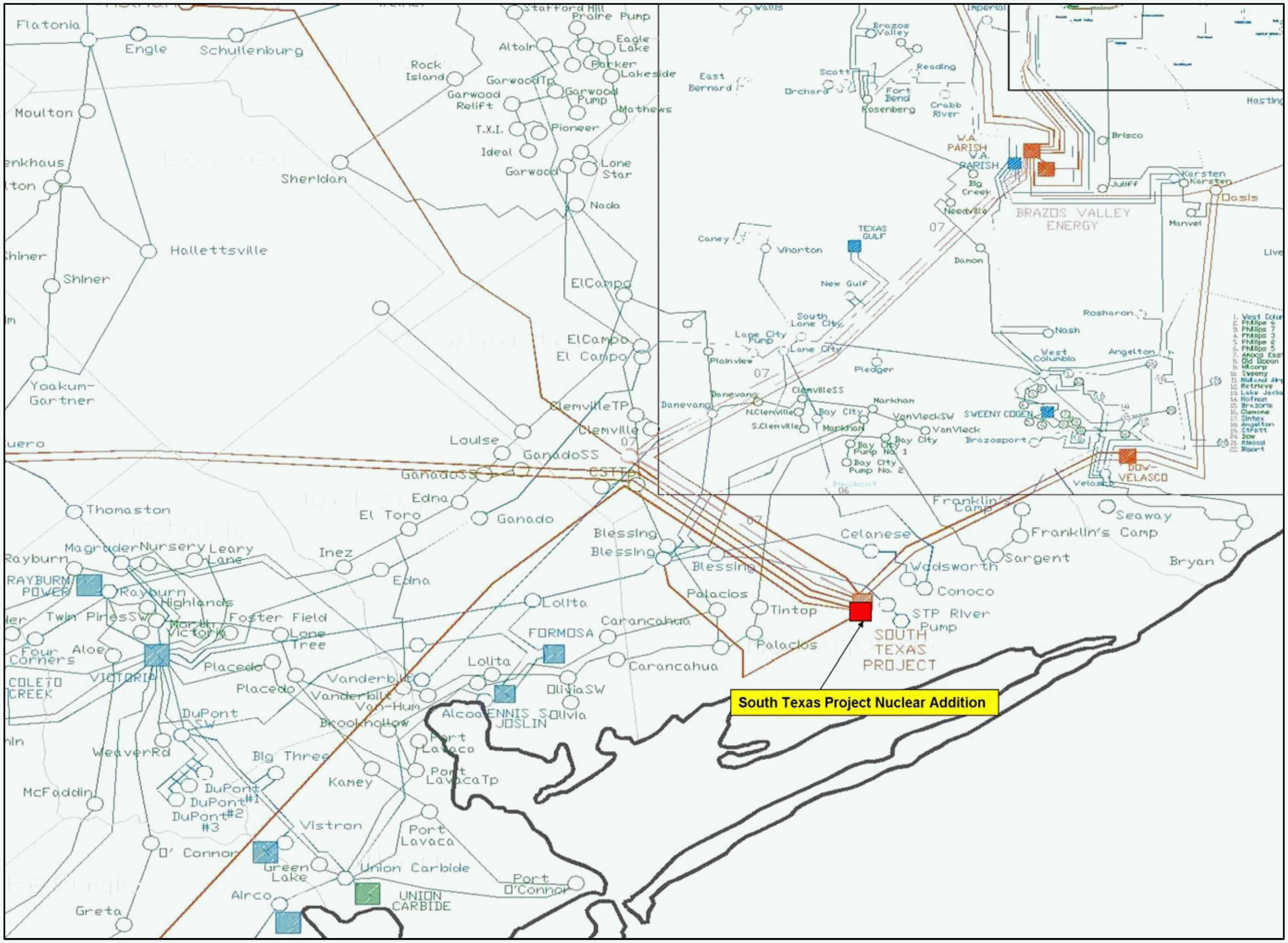

Figure 3.7-1 345kV Transmission Configuration Map

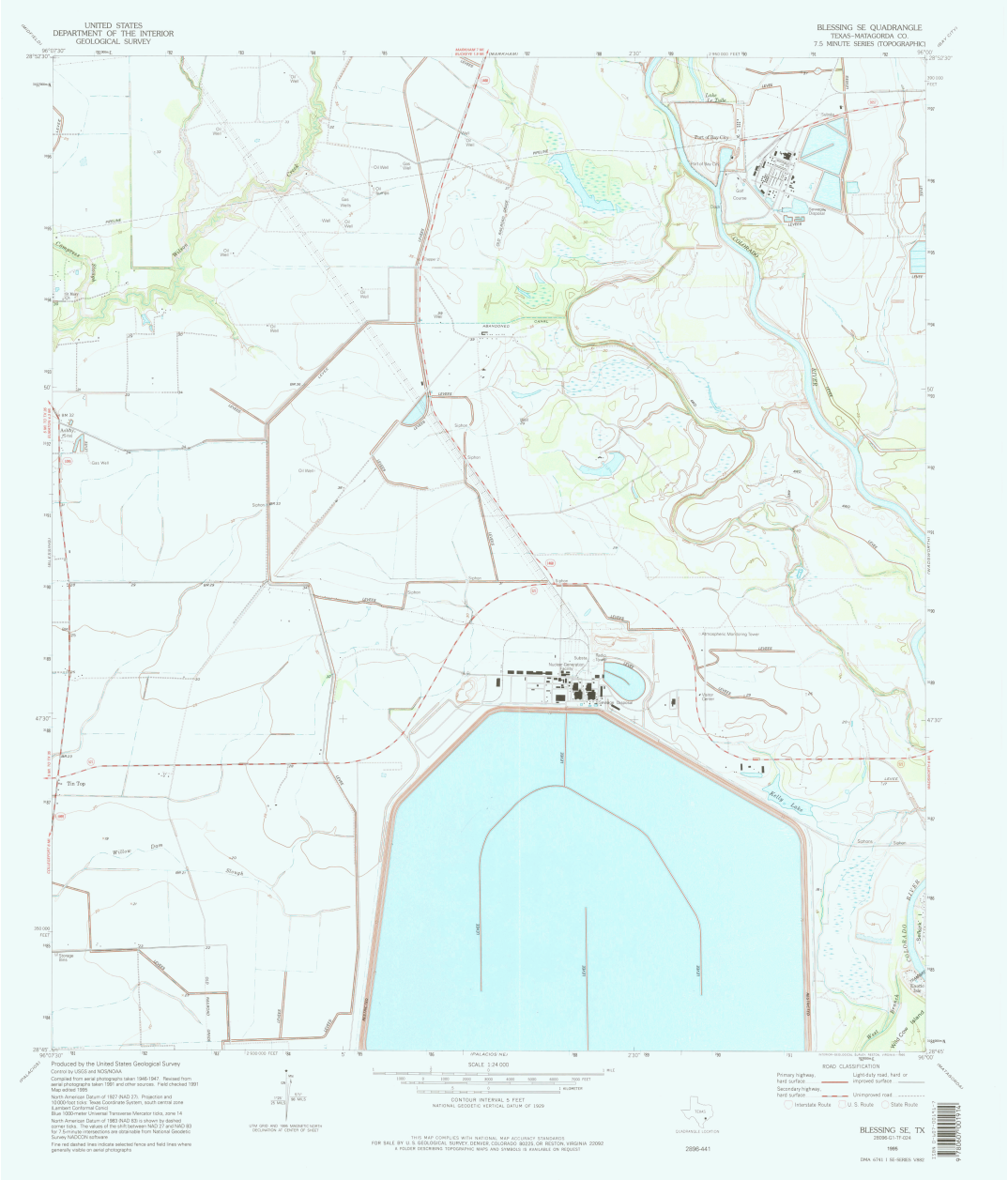

Figure 3.7-2 Topographic Map of 345kV Transmission Line (Blessing SE Quadrangle)

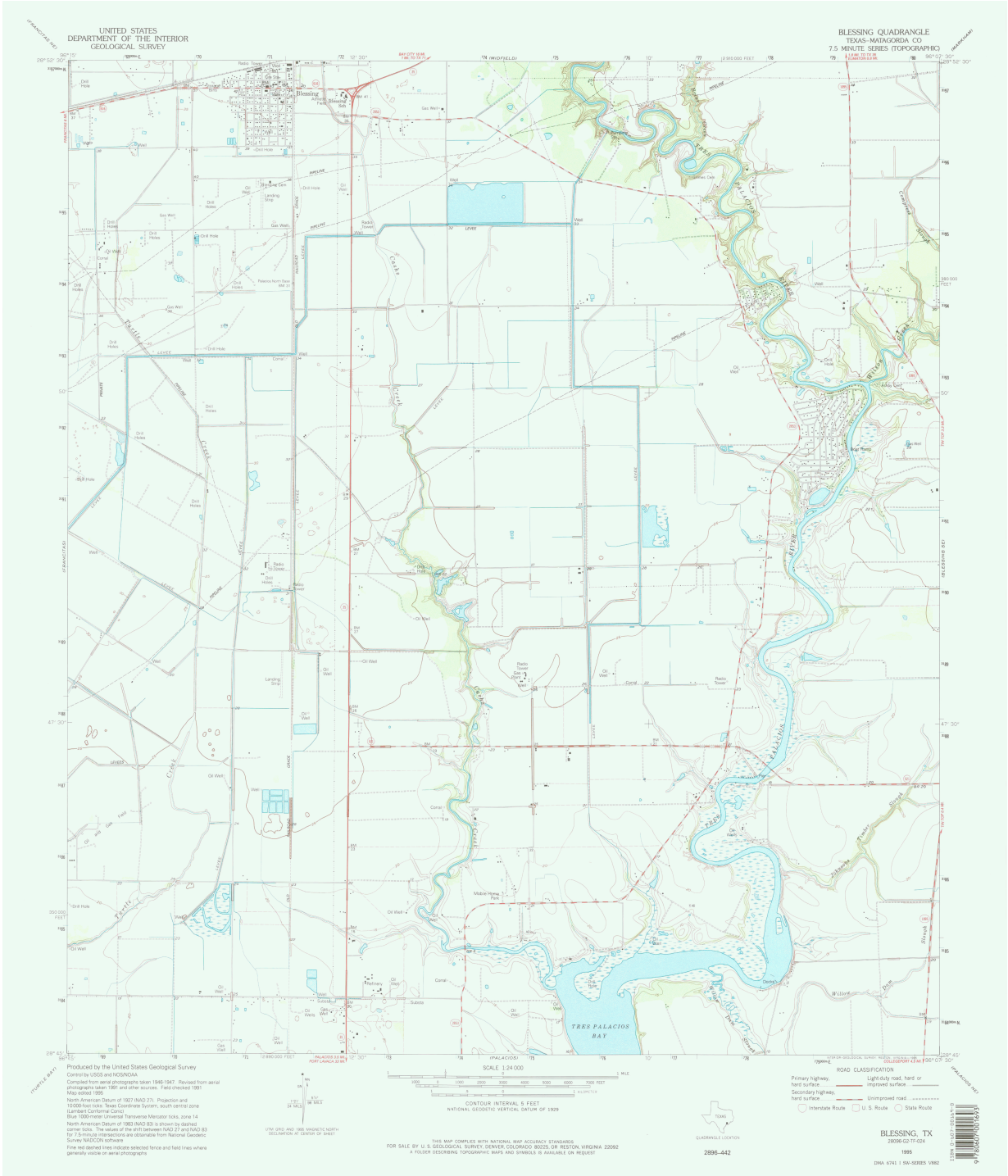

Figure 3.7-3 Topographical Map of 345kV Transmission Line (Blessing Quadrangle)

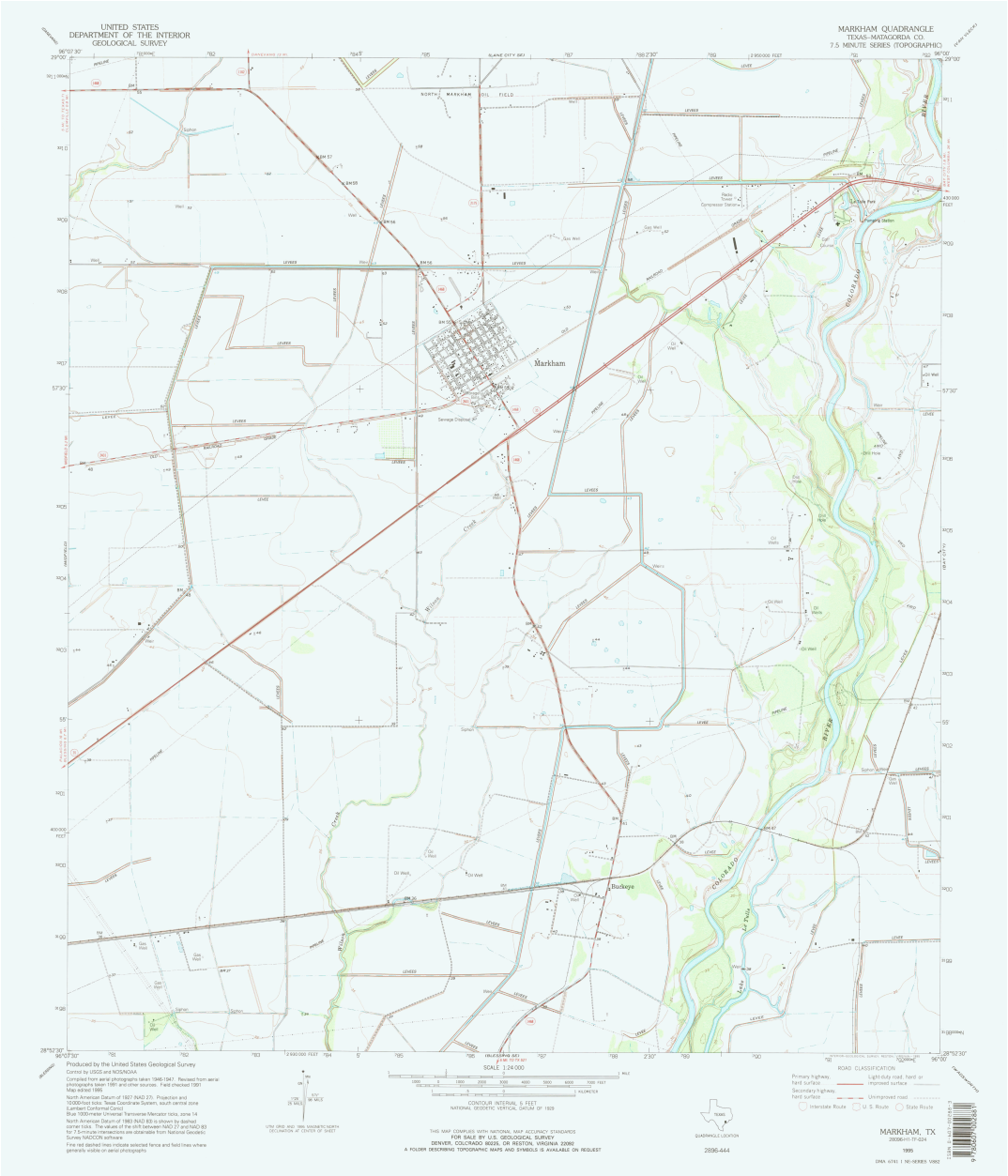

Figure 3.7-4 Topographic Map of 345kV Transmission Line (Markham Quadrangle)

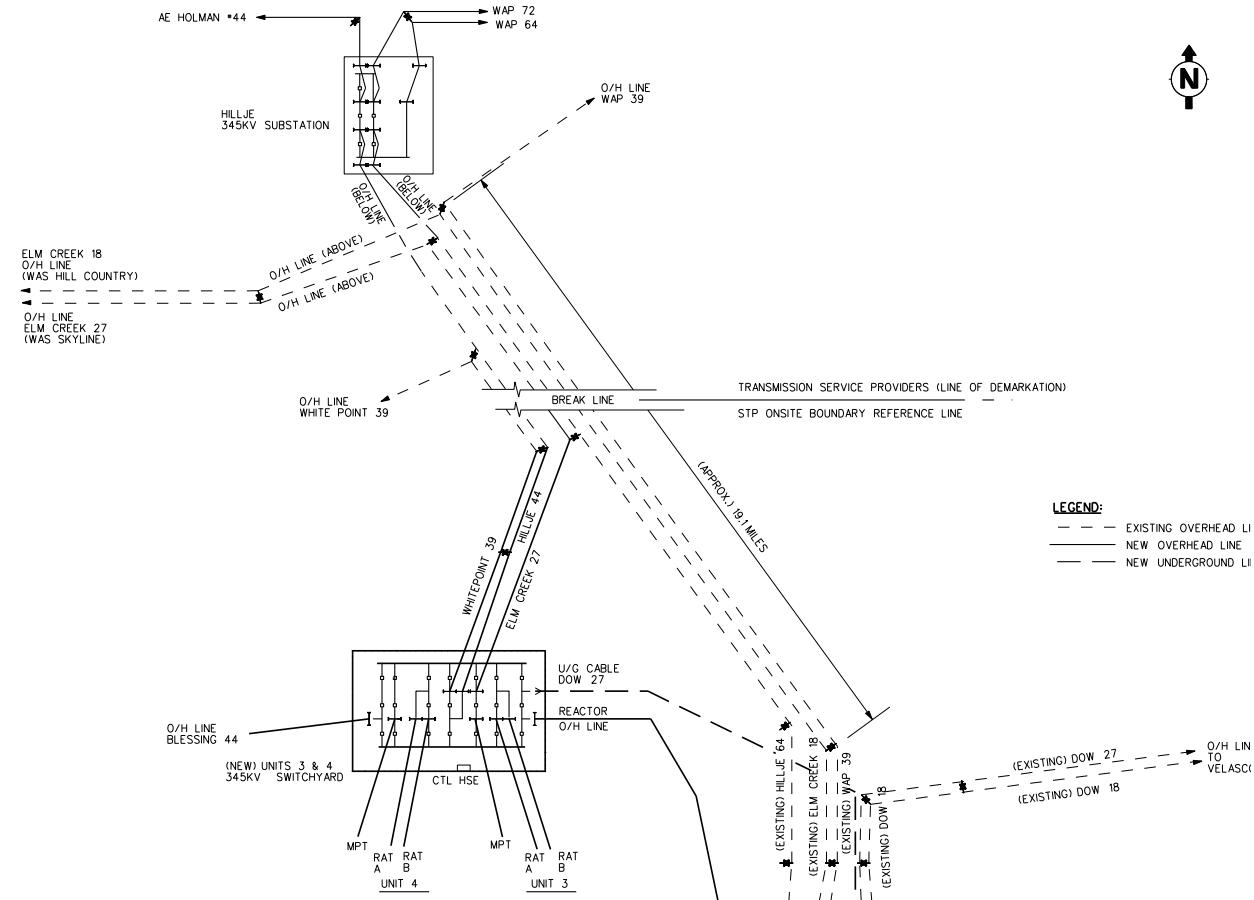

IE NAME	PRESENT CONNECTION	NEW CONNECTION	ONSITE MODIFICATION	OFFSITE MODIFICATION
OW 18	STP 1 & 2 SWYD	STP 1 & 2 SWYD	NONE	NONE
OW 27	STP 1 & 2 SWYD	STP 3 & 4 SWYD	UNDERGROUND CKT.	NONE
'AP 39	STP 1 & 2 SWYD	STP 1 & 2 SWYD	NONE	NONE
.M CREEK 18	STP 1 & 2 SWYD	STP 1 & 2 SWYD	NONE	NONE
LLJE 64	STP 1 & 2 SWYD	STP 1 & 2 SWYD	NONE	REWORK CONDUCTORS AND TOWERS
.ESSING 44	STP 1 & 2 SWYD	STP 3 & 4 SWYD	STP 3 & 4 SWYD	NONE
.M CREEK 27	STP 1 & 2 SWYD	STP 3 & 4 SWYD	STP 3 & 4 SWYD	NONE
LLJE 44	STP 1 & 2 SWYD	STP 3 & 4 SWYD	STP 3 & 4 SWYD	REWORK CONDUCTORS AND TOWERS
HITEPOINT 39	STP 1 & 2 SWYD	STP 3 & 4 SWYD	STP 3 & 4 SWYD	NONE

Figure 3.7-5 345kV Transmission Configuration for STP 1 & 2 and STP 3 & 4