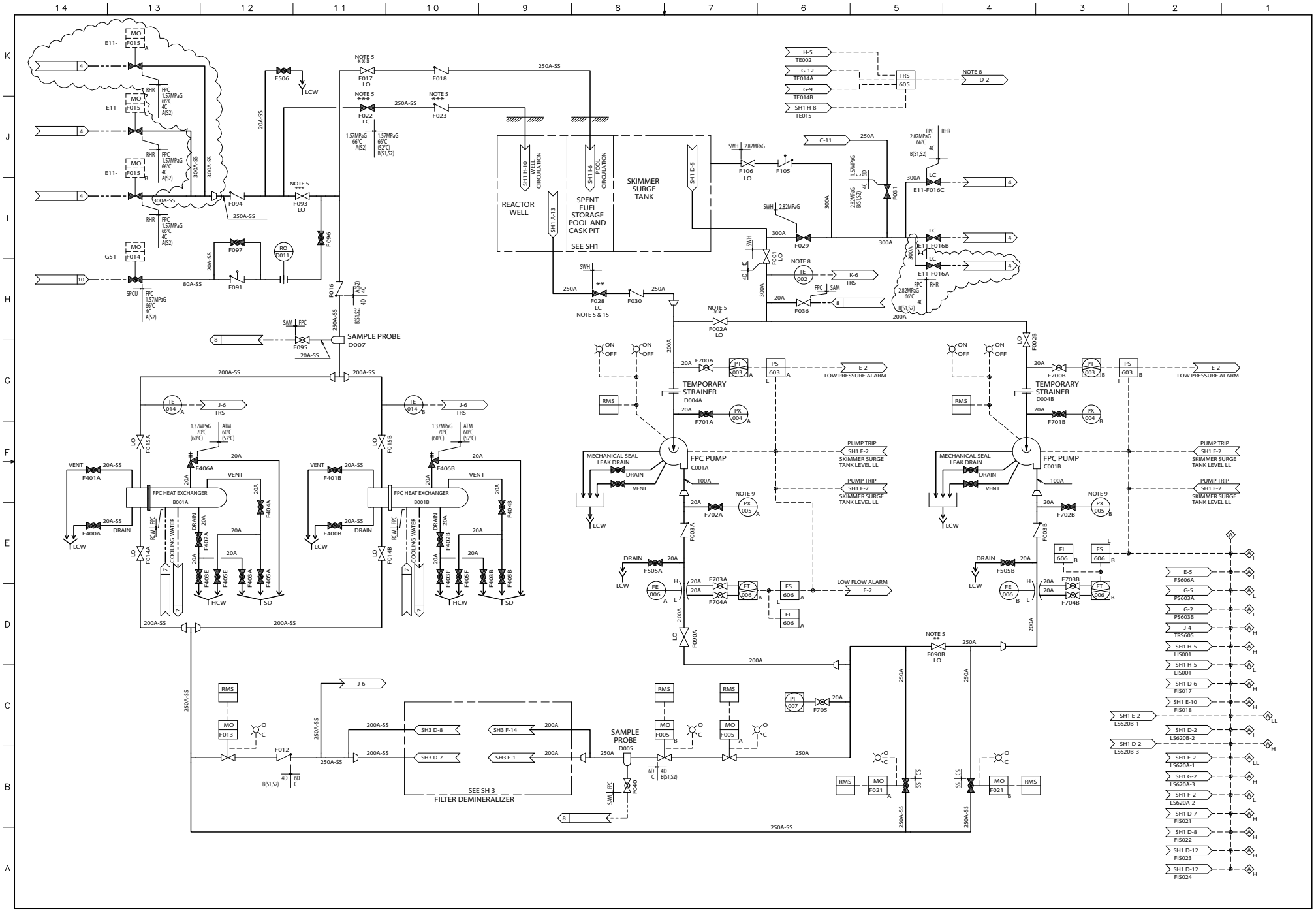

FIGURE 9.1-1 FUEL POOL COOLING AND CLEANUP SYSTEM P&ID (Sheet 2 of 3)

STP 3&4 Rev.2

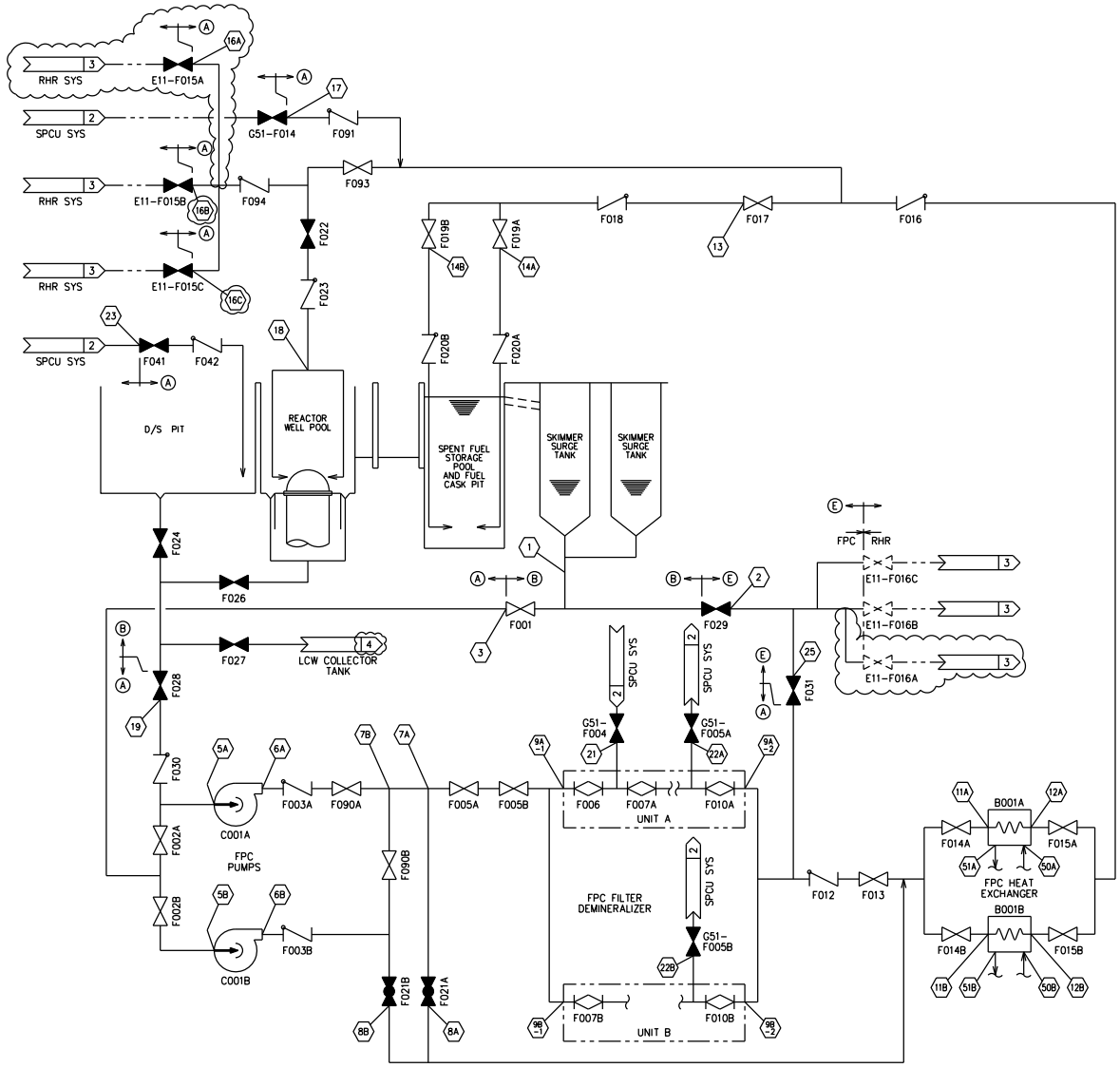

MODE A FPC SYSTEM FLOW DIAGRAM

BOUNDARY CONDITION	Ⓐ	Ⓑ	Ⓒ	Ⓓ	Ⓔ
DESIGN PRESSURE [MPa G]	1.57	STATIC WATER HEAD	3.43	2.82	2.82
DESIGN TEMPERATURE [℃]	66	66	66	66	66

NOTES :

1. ✱ TABLE VALUES NOT AVAILABLE UNTIL DETAILED DESIGN IS COMPLETE.
2. EXCHANGED HEAT LOADS FOR MODES A AND B APPLY TO SYSTEM HEAT EXCHANGERS AFTER REACTOR WELL/FUEL STORAGE POOL GATE IS IN CLOSED POSITION.
3. IN MODE B, RHR OPERATES IN PARALLEL WITH FPC SYSTEM.
4. MODE D, REFUELING OPERATION WATER TO FILL REACTOR WELL DISCHARGES THROUGH DIFFUSERS AND WALL SPARGER OR EXPOSED WALL WETTING METHOD.
5. DURING MODES E-1, E-2, E-3 AND G, SPENT FUEL STORAGE POOL TEMPERATURE MAY EXCEED 52℃ FOR SHORT PERIOD.
6. 5-$\frac{A}{B}$ MEANS 5A AND 5B. EACH AT VALUE SHOWN

   5A(B) MEANS 5A OR 5B AT VALUE SHOWN BUT NOT CONCURRENTLY.
7. MODE C, FAILURE OF A OR B TRAIN IS POSTULATED.
8. DRAIN OPERATING MODES :

   MODE E-1, TWO FPC PUMPS ARE OPERATING TO DRAIN D/S PIT AND REACTOR WELL. DISCHARGING THE WATER FOR TREATMENT BY F/D A AND F/D B BEFORE RELEASE INTO THE SUPPRESSION POOL THROUGH THE SPCU SYSTEM PIPING.

   MODE E-2, ONE FPC PUMP IS OPERATING TO DRAIN REACTOR WELL AND DISCHARGE THE WATER FOR TREATMENT IN ONE F/D BEFORE RELEASE INTO THE SUPPRESSION POOL THROUGH THE SPCU SYSTEM PIPING. THE SECOND FPC PUMP IS OPERATING TO REMOVE WATER FROM THE SPENT FUEL STORAGE POOL SKIMMER TANKS AND DISCHARGING THE WATER THROUGH THE F/D BYPASS PIPE INTO THE FPC HEAT EXCHANGERS TO COOL IT BEFORE RETURN TO THE SPENT FUEL STORAGE POOL DIFFUSERS

   MODE E-3, TWO FPC PUMPS ARE OPERATING TO DRAIN THE D/S PIT AND REACTOR WELL AND DISCHARGE THE WATER FOR TREATMENT IN TWO F/D'S BEFORE RELEASE TO THE LCW COLLECTOR TANK OF RADWASTE SYSTEM THROUGH THE RHR SYSTEM.
9. IN MODE B, ONE RHR PUMP AND HEAT EXCHANGER IS OPERATED FOR BACKUP COOLING BECAUSE FPC SYSTEM ALONE CAN NOT COOL POOL SUFFICIENTLY.
10. IN MODE D, RHR SHUTDOWN COOLING RETURN WATER IS INJECTED THROUGH REACTOR WELL DIFFUSERS.
11. IN MODE F, 1 FPC PUMP (A) OR (B) IS OPERATED FOR FUEL POOL COOLING AND SPCU IS OPERATED FOR S/P CLEANUP THROUGH F/D (A) .
12. IN MODE G, 1 FPC PUMP (A) OR (B) IS OPERATED FOR FUEL POOL COOLING AND S/P WATER IS SUPPLIED TO D/S PIT THROUGH F/D BY SPCU PUMP OPERATION.
13. VALVES F014A, F014B, F027 AND G41-F014 ARE NOT SHOWN IN THE MODE TABLES BECAUSE THEY DO NOT OPEN/CLOSE FOR ANY OPERATING MODE.
14. FLOWS SHOWN FOR MODE E-3 ARE TO BE FINALIZED AFTER DETAIL DESIGN IS COMPLETE.

REFERENCE DOCUMENTS	MPL NO.
1. FUEL POOL COOLING AND CLEANUP SYS P&ID	G41-1010
2. SUPPRESSION POOL CLEANUP SYSTEM P&ID	G51-1010
3. RESIDUAL HEAT REMOVAL SYSTEM P&ID	E11-1010
4. RADWASTE SYSTEM P&ID	K17-1010

MPL NO. G41-1020

FIGURE 9.1-2 FUEL POOL COOLING AND CLEANUP SYSTEM PFD (Sheet 1 of 2)

STP 3&4 Rev.2

MODE A: NORMAL HEAT LOAD OPERATING MODE

POSITION ⬡	1	3	5 A/B	6 A/B	7A	7B	9 A-1/B-1	9 A-2/B-2	11 A/B	12 A/B	13	14 A/B	50 A/B	51 A/B
FLOW (m^3 /h)	500	500	250	250	500	500	250	250	250	250	500	250		
PRESS (MPa G)	*	*	*	*	*	*	*	*	*	*	*	*		
TEMP (℃)	52	←						→	52	45.4	45.4	45.4		
Max ALLOWABLE PRESS LOSS (m)			TDH = 80				ΔP = 41		ΔP = 7					

EXCHANGED HEAT/UNIT 6.9 X 10^6 kJ/h (21 DAYS AFTER SHUTDOWN) NOTE 2

MODE B: MAXIMUM HEAT LOAD OPERATING MODE NOTE 9

POSITION ⬡	1	2	3	5 A/B	6 A/B	7A	7B	9 A-1/B-1	9 A-2/B-2	11 A/B	12 A/B	13	16A(B,C)	14 A/B	50 A/B	51 A/B
FLOW (m^3 /h)	850	350	500	250	250	500	500	250	250	250	250	850	350	425		
PRESS (MPa G)	*	*	*	*	*	*	*	*	*	*	*	*	*	*		
TEMP (℃)	60	←							→	60	53.4	51.5	48.9	51.5		

EXCHANGED HEAT/UNIT 30.14 X 10^6 kJ/h (21 DAYS AFTER SHUTDOWN) NOTE 2
FPC Hx/UNIT 6.9 X 10^6 kJ/h AND RHR Hx 16.32 X 10 kJ/h

MODE C: COOLING MODE AFTER EARTHQUAKE (POSTULATED SINGLE FAILURE) NOTE 7

POSITION ⬡	1	3	5A	6A	7A	8A	11A	12A	13	14 A/B	50A	51A
FLOW (m^3 /h)	250	250	250	250	250	250	250	250	250	125		
PRESS (MPa G)	*	*	*	*	*	*	*	*	*	*		
TEMP (℃)	62.7	←				→	62.7	51.9	51.9	51.9		

EXCHANGED HEAT 11.22 X 10^6 kJ/h (45 DAYS AFTER SHUTDOWN)

MODE D: REFUELING OPERATING MODE NOTE 10

POSITION ⬡	1	3	5 A/B	6 A/B	7A	7B	9 A-1/B-1	9 A-2/B-2	11 A/B	12 A/B	13	50 A/B	51 A/B	16A(B,C)	18
FLOW (m^3 /h)	500	500	250	250	500	500	250	250	250	250	500			954	954
PRESS (MPa G)	*	*	*	*	*	*	*	*	*	*	*			*	*
TEMP (℃)	Max 52	←						→	Max 52	Max 45.4	Max 45.4			Max 52	Max 52

MODE E1: DRAIN OPERATING MODE NOTES 5 & 8

POSITION ⬡	19	5 A/B	6 A/B	7A	7B	9 A-1/B-1	22 A/B
FLOW (m^3 /h)	500	250	250	500	500	250	250
PRESS (MPa G)	*	*	*	*	*	*	*
TEMP (℃)	Max 52	←				→	Max 52

MODE E3: DRAIN OPERATING MODE NOTES 5,8 & 14

POSITION ⬡	19	5 A/B	6 A/B	7A	7B	9 A-1/B-1	9 A-2/B-2	25
FLOW (m^3 /h)	500	250	250	500	500	250	250	500
PRESS (MPa G)	*	*	*	*	*	*	*	*
TEMP (℃)	Max 52	←					→	Max 52

MODE E2: DRAIN OPERATING MODE NOTES 5 & 8

POSITION ⬡	19	5A	6A	7A	7B	9A-1 (B-1)	22A(B)	1	3	4	5B	6B	8A	11 A/B	12 A/B	13	14 A/B	50 A/B	51 A/B
FLOW (m^3 /h)	250	250	250	250	250	250	250	250	250	250	250	250	250	125	125	250	125		
PRESS (MPa G)	*	*	*	*	*	*	*	*	*	*	*	*	*	*	*	*	*		
TEMP (℃)	Max 52	←											→	Max 52	Max 42.2	Max 42.2	Max 42.2		

MODE F: SUPPRESSION POOL CLEANUP OPERATING MODE NOTE 11

POSITION ⬡	1	3	5A(B)	6A(B)	7A	7B	9B-1	9B-2	11 A/B	12 A/B	13	14 A/B	50 A/B	51 A/B	21	22A
FLOW (m^3 /h)	250	250	250	250	250	250	250	250	125	125	250	125			250	250
PRESS (MPa G)	*	*	*	*	*	*	*	*	*	*	*	*			*	*
TEMP (℃)	53.7	←						→	53.7	42.9	42.9	42.9			Max 35	Max 35

EXCHANGED HEAT 11.22 X 10^6 kJ/h (45 DAYS AFTER SHUTDOWN)

MODE G: D/S PIT AND REACTOR WELL FILL OPERATING MODE NOTES 5 & 12

POSITION ⬡	1	3	5A(B)	6A(B)	7A	7B	9B-1	9B-2	11 A/B	12 A/B	13	14 A/B	50 A/B	51 A/B	21	22A	23
FLOW (m^3 /h)	250	250	250	250	250	250	250	250	125	125	250	125			250	250	250
PRESS (MPa G)	*	*	*	*	*	*	*	*	*	*	*	*			*	*	*
TEMP (℃)	Max 52	←									→	Max 52			Max 35	Max 35	Max 35

VALVE OPENING/CLOSING CONDITION NOTE 13

	F001	F002A	F002B	F090A	F090B	F021A	F021B	F005 A,B	F013	F014A	F014B	F015A	F015B	F017	F022	F024	F026	F028	F029	F041	F093	F006	F010A	G51-F004	G51-F005A	F007B	F010B	G51-F005B	E11-F015A	E11-F015B	E11-F015C	E11-F016A	E11-F016B	E11-F016C	F031
MODE A	O	O	O	O	O	X	X	O	O	O	O	O	O	O	X	X	X	X	X	X	O	O	O	X	X	O	O	X	X	X	X	X	X	X	X	X
MODE B	O	O	O	O	O	X	X	O	O	O	O	O	O	O	X	X	X	X	O	X	O	O	O	X	X	O	O	X	O X X X O	O X X X O	O X X X O	O X X X O	O X X X O	O X X X O	X
MODE C	O	O/X	X/O	O	O	P/X	X/P	X	X	O/X	X/O	O/X	X/O	O	X	X	X	X	X	X	X	O	O	X	X	O	O	X	X	X	X	X	X	X	X	X
MODE D	O	O	O	O	O	X	X	O	O	O	O	O	O	O	X	X	X	X	X	X	X	O	O	X	X	O	O	X	O X X X O	O X X X O	O X X X O	O X X X O	X	X	X	X
MODE E1	X	O	O	O	O	X	X	O	O	O	O	O	O	O	X	O	O	O	X	X	O	O	X	X	O	O	X	O	X	X	X	X	X	X	X	X
MODE E2	O	X	O	O	X	X	P	O	O	O	O	O	O	O	X	X	O	O	X	X	O	O/X	X	X	O/X	X/O	X	X/O	X	X	X	X	X	X	X	X
MODE E3	X	O	O	O	O	X	X	O	X	O	O	O	O	O	X	O	O	O	X	X	O	O	O	X	X	O	O	X	X	X	X	O X X X O	X O X X O	X O X X O	O
MODE F	O	O/X	X/O	O	O	X	X	O	O	O	O	O	O	O	X	X	X	X	X	X	O	X	X	O	O	O	O	X	X	X	X	X	X	X	X	X
MODE G	O	O/X	X/O	O	O	X	X	O	O	O	O	O	O	O	X	X	X	X	X	X	O	X	X	O	O	O	O	X	X	X	X	X	X	X	X	X

O : OPEN P : PARTIALLY OPEN X : CLOSE

FIGURE 9.1-2 FUEL POOL COOLING AND CLEANUP SYSTEM PFD (Sheet 2 of 2)

STP 3&4 Rev.2

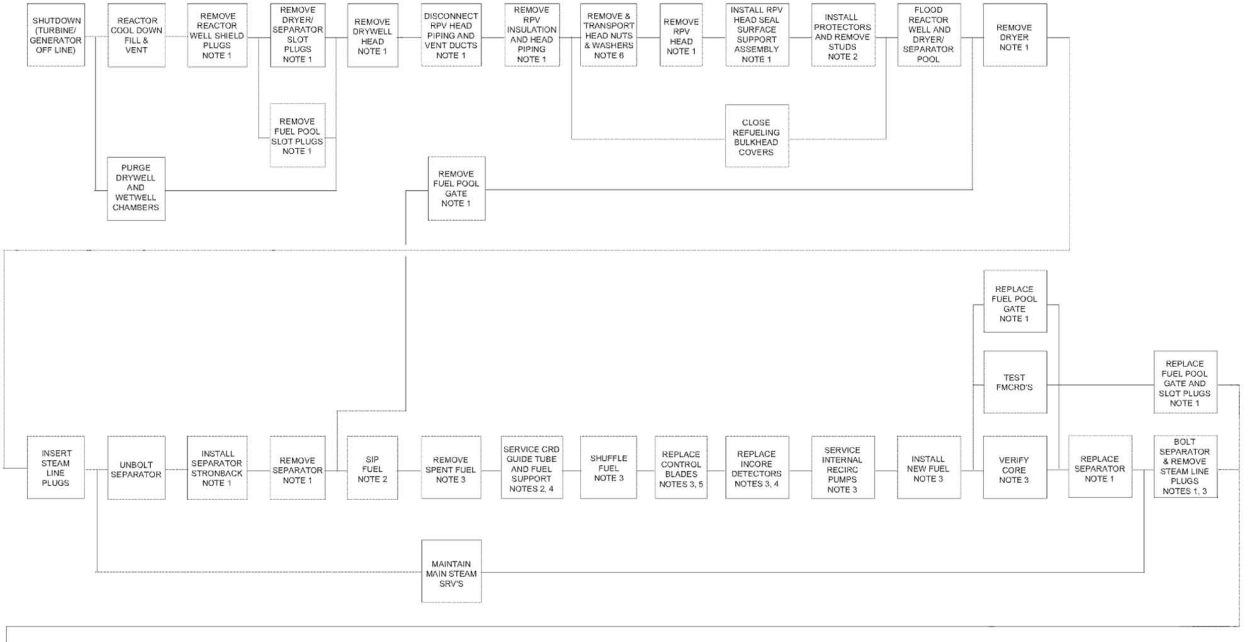

FIGURE 9.1-12 PLANT REFUELING AND SERVICING SEQUENCE

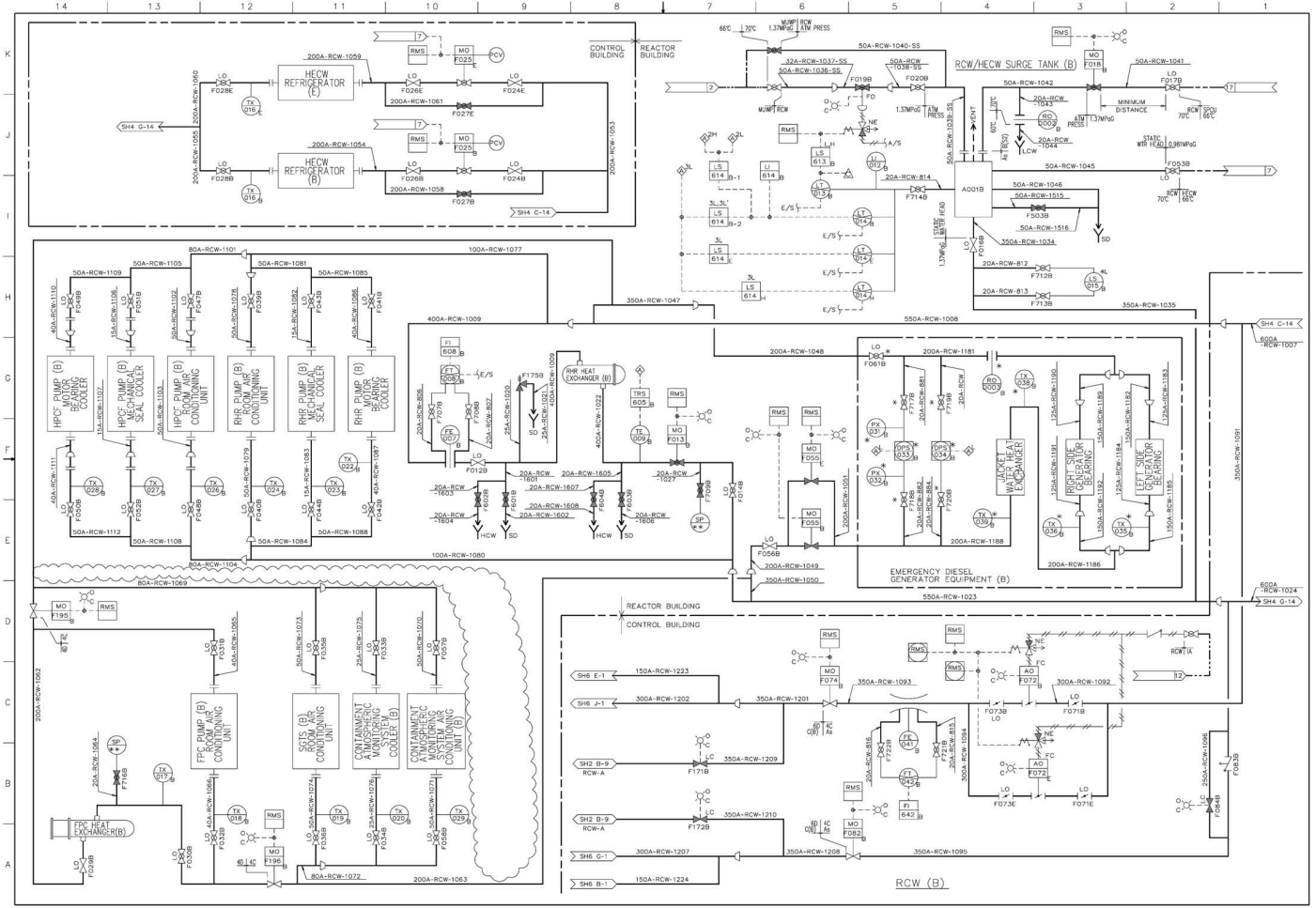

FIGURE 9.2-1 REACTOR BUILDING COOLING WATER SYSTEM P&ID (Sheet 5 of 9)

STP 3&4 Rev.2

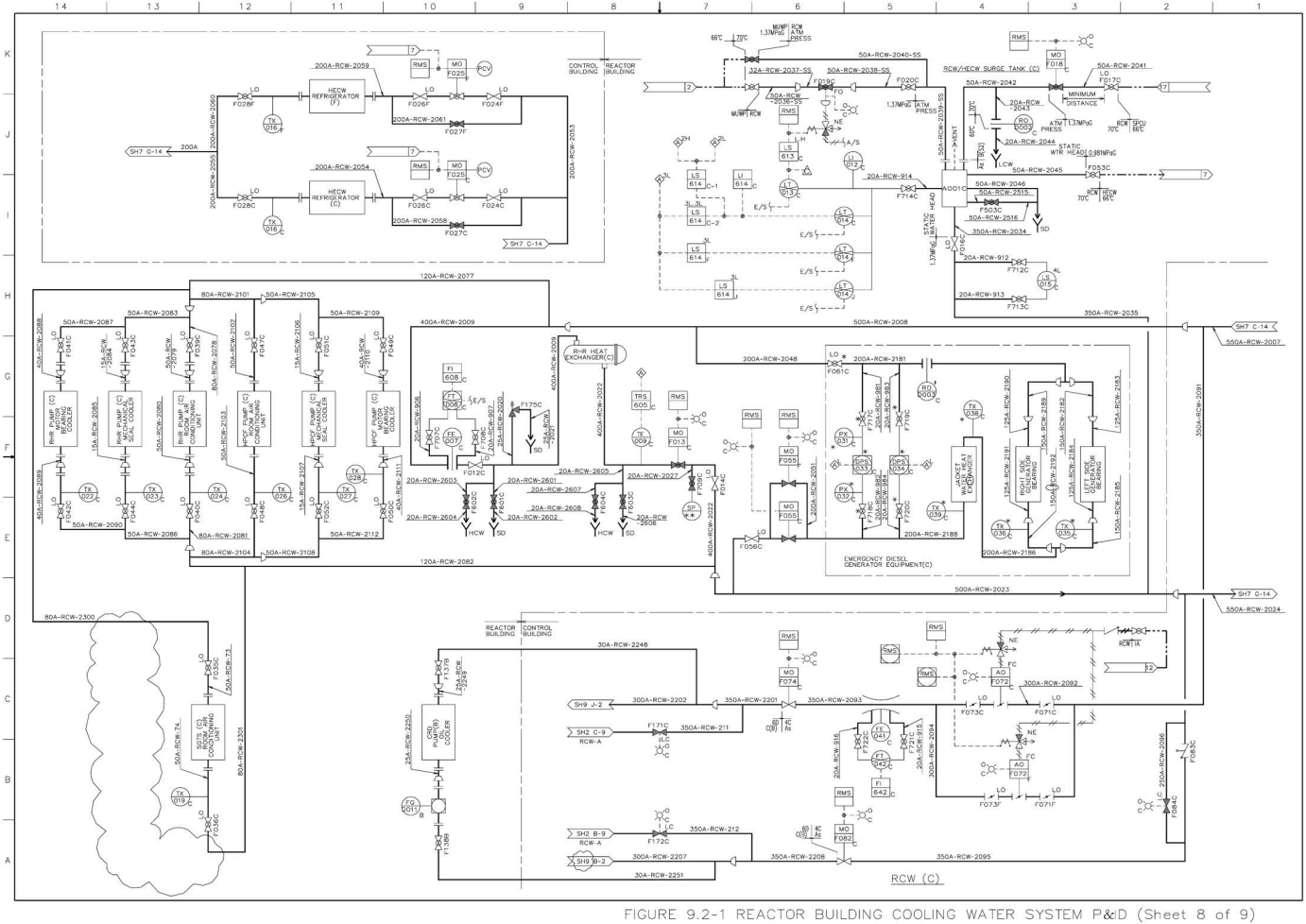

FIGURE 9.2-1 REACTOR BUILDING COOLING WATER SYSTEM P&ID (Sheet 8 of 9)

STP 3&4 Rev.2

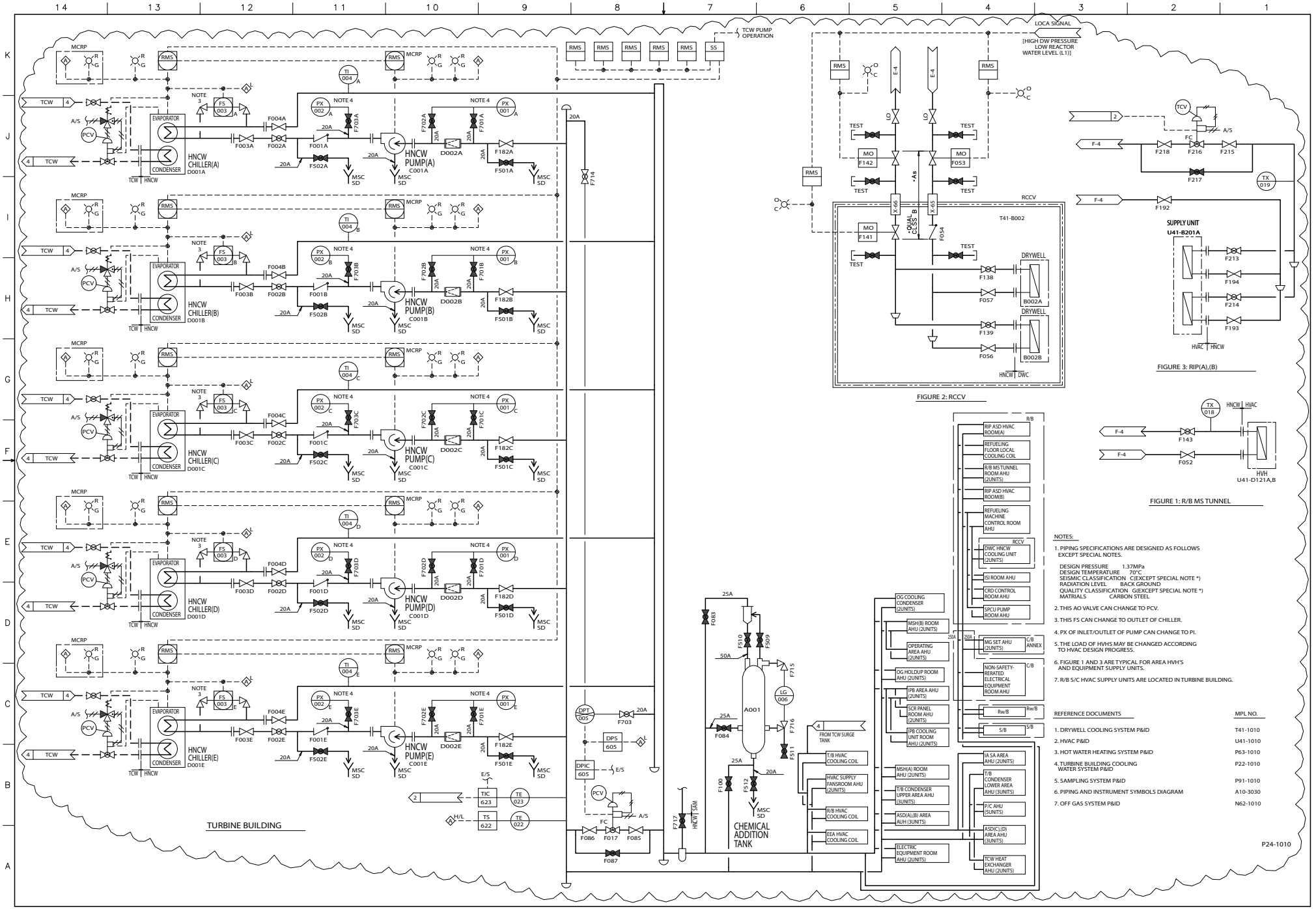

FIGURE 3: RIP(A),(B)

FIGURE 2: RCCV

FIGURE 1: R/B MS TUNNEL

NOTES:

1. PIPING SPECIFICATIONS ARE DESIGNED AS FOLLOWS EXCEPT SPECIAL NOTES.

   DESIGN PRESSURE 1.37MPa
   DESIGN TEMPERATURE 70°C
   SEISMIC CLASSIFICATION C(EXCEPT SPECIAL NOTE *)
   RADIATION LEVEL BACK GROUND
   QUALITY CLASSIFICATION G(EXCEPT SPECIAL NOTE *)
   MATRIALS CARBON STEEL

2. THIS AO VALVE CAN CHANGE TO PCV.
3. THIS FS CAN CHANGE TO OUTLET OF CHILLER.
4. PX OF INLET/OUTLET OF PUMP CAN CHANGE TO PI.
5. THE LOAD OF HVHS MAY BE CHANGED ACCORDING TO HVAC DESIGN PROGRESS.
6. FIGURE 1 AND 3 ARE TYPICAL FOR AREA HVH'S AND EQUIPMENT SUPPLY UNITS.
7. R/B S/C HVAC SUPPLY UNITS ARE LOCATED IN TURBINE BUILDING.

REFERENCE DOCUMENTS	MPL NO.
1. DRYWELL COOLING SYSTEM P&ID	T41-1010
2. HVAC P&ID	U41-1010
3. HOT WATER HEATING SYSTEM P&ID	P63-1010
4. TURBINE BUILDING COOLING WATER SYSTEM P&ID	P22-1010
5. SAMPLING SYSTEM P&ID	P91-1010
6. PIPING AND INSTRUMENT SYMBOLS DIAGRAM	A10-3030
7. OFF GAS SYSTEM P&ID	N62-1010

FIGURE 9.2-2 HVAC NORMAL COOLING WATER SYSTEM P&ID

STP 3&4 Rev.2

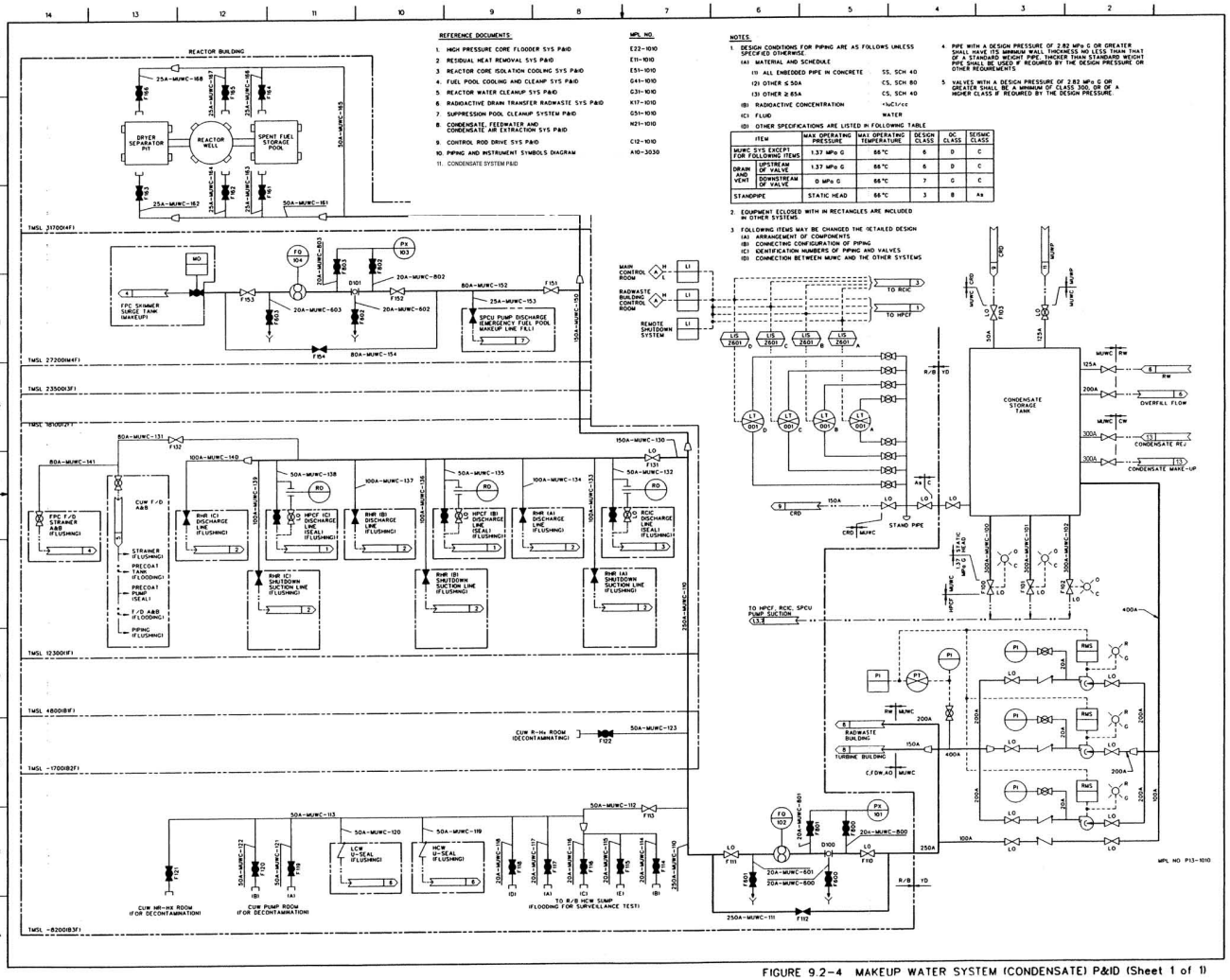

REFERENCE DOCUMENTS

	MPL NO.
1. HIGH PRESSURE CORE FLOODER SYS P&ID	E22-1010
2. RESIDUAL HEAT REMOVAL SYS P&ID	E11-1010
3. REACTOR CORE ISOLATION COOLING SYS P&ID	E51-1010
4. FUEL POOL COOLING AND CLEANUP SYS P&ID	G41-1010
5. REACTOR WATER CLEANUP SYS P&ID	G31-1010
6. RADIOACTIVE DRAIN TRANSFER RADWASTE SYS P&ID	K17-1010
7. SUPPRESSION POOL CLEANUP SYSTEM P&ID	G51-1010
8. CONDENSATE, FEEDWATER AND CONDENSATE AIR EXTRACTION SYS P&ID	M21-1010
9. CONTROL ROD DRIVE SYS P&ID	C12-1010
10. PIPING AND INSTRUMENT SYMBOLS DIAGRAM	A10-3030
11. CONDENSATE SYSTEM P&ID	

NOTES

1. DESIGN CONDITIONS FOR PIPING ARE AS FOLLOWS UNLESS SPECIFIED OTHERWISE.
   - (A) MATERIAL AND SCHEDULE
     - (1) ALL EMBEDDED PIPE IN CONCRETE — SS, SCH 40
     - (2) OTHER ≤ 50A — CS, SCH 80
     - (3) OTHER ≥ 65A — CS, SCH 40
   - (B) RADIOACTIVE CONCENTRATION — <NCI/cc
   - (C) FLUID — WATER
   - (D) OTHER SPECIFICATIONS ARE LISTED IN FOLLOWING TABLE

ITEM		MAX OPERATING PRESSURE	MAX OPERATING TEMPERATURE	DESIGN CLASS	QC CLASS	SEISMIC CLASS
MUWC SYS EXCEPT FOR FOLLOWING ITEMS		1.37 MPa G	66°C	6	D	C
DRAIN AND VENT	UPSTREAM OF VALVE	1.37 MPa G	66°C	6	D	C
	DOWNSTREAM OF VALVE	0 MPa G	66°C	7	G	C
STANDPIPE		STATIC HEAD	66°C	3	B	Aa

2. EQUIPMENT ENCLOSED WITH IN RECTANGLES ARE INCLUDED IN OTHER SYSTEMS.
3. FOLLOWING ITEMS MAY BE CHANGED THE RETAILED DESIGN
   - (A) ARRANGEMENT OF COMPONENTS
   - (B) CONNECTING CONFIGURATION OF PIPING
   - (C) IDENTIFICATION NUMBERS OF PIPING AND VALVES
   - (D) CONNECTION BETWEEN MUWC AND THE OTHER SYSTEMS
4. PIPE WITH A DESIGN PRESSURE OF 2.82 MPa G OR GREATER SHALL HAVE ITS MINIMUM WALL THICKNESS NO LESS THAN THAT OF A STANDARD WEIGHT PIPE. THICKER THAN STANDARD WEIGHT PIPE SHALL BE USED IF REQUIRED BY THE DESIGN PRESSURE OR OTHER REQUIREMENTS
5. VALVES WITH A DESIGN PRESSURE OF 2.82 MPa G OR GREATER SHALL BE A MINIMUM OF CLASS 300, OR OF A HIGHER CLASS IF REQUIRED BY THE DESIGN PRESSURE.

FIGURE 9.2-4 MAKEUP WATER SYSTEM (CONDENSATE) P&ID (Sheet 1 of 1)

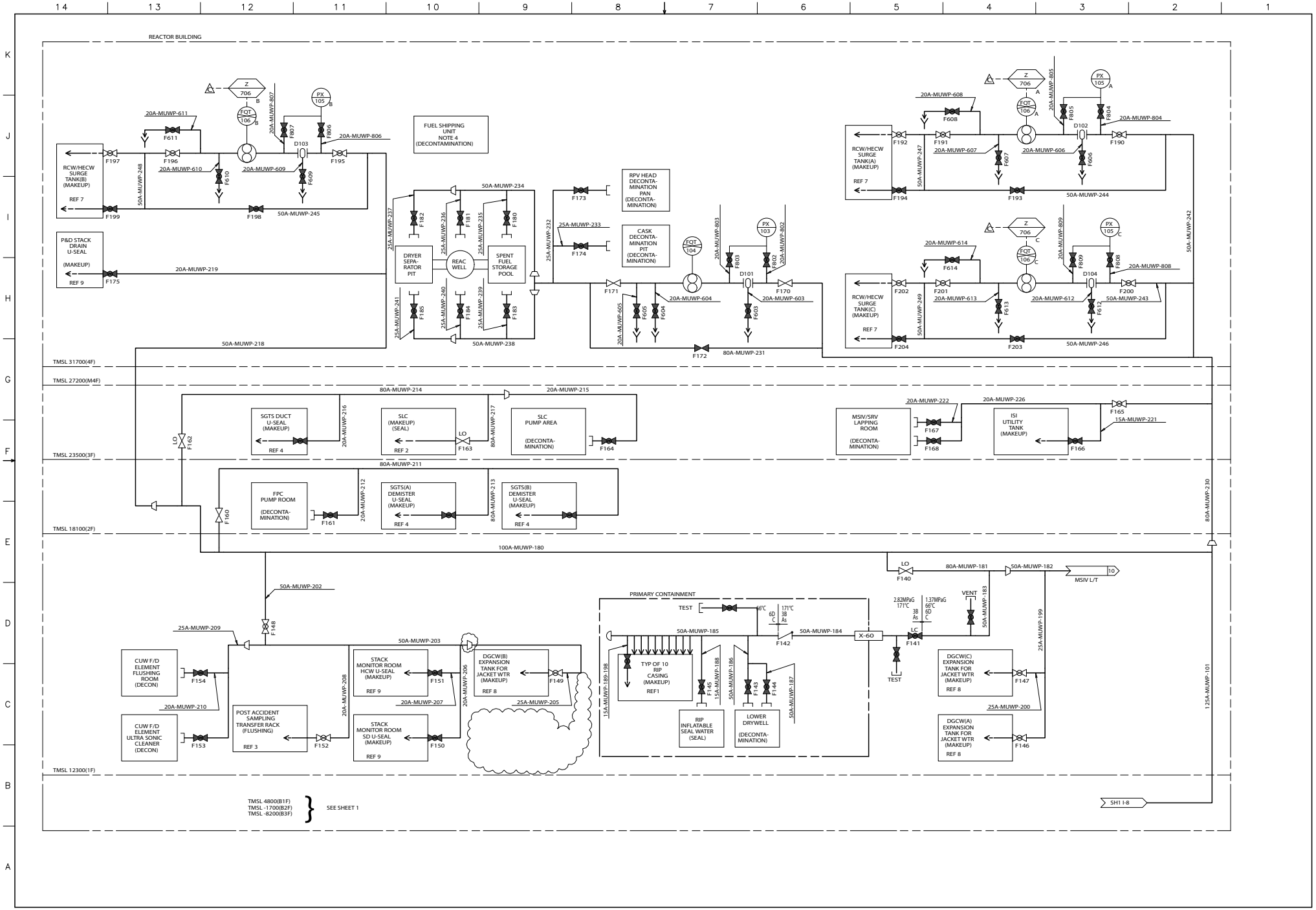

FIGURE 9.2-5 MAKEUP WATER SYSTEM (PURIFIED) P&ID (Sheet 2 of 3)

STP 3&4 Rev.2

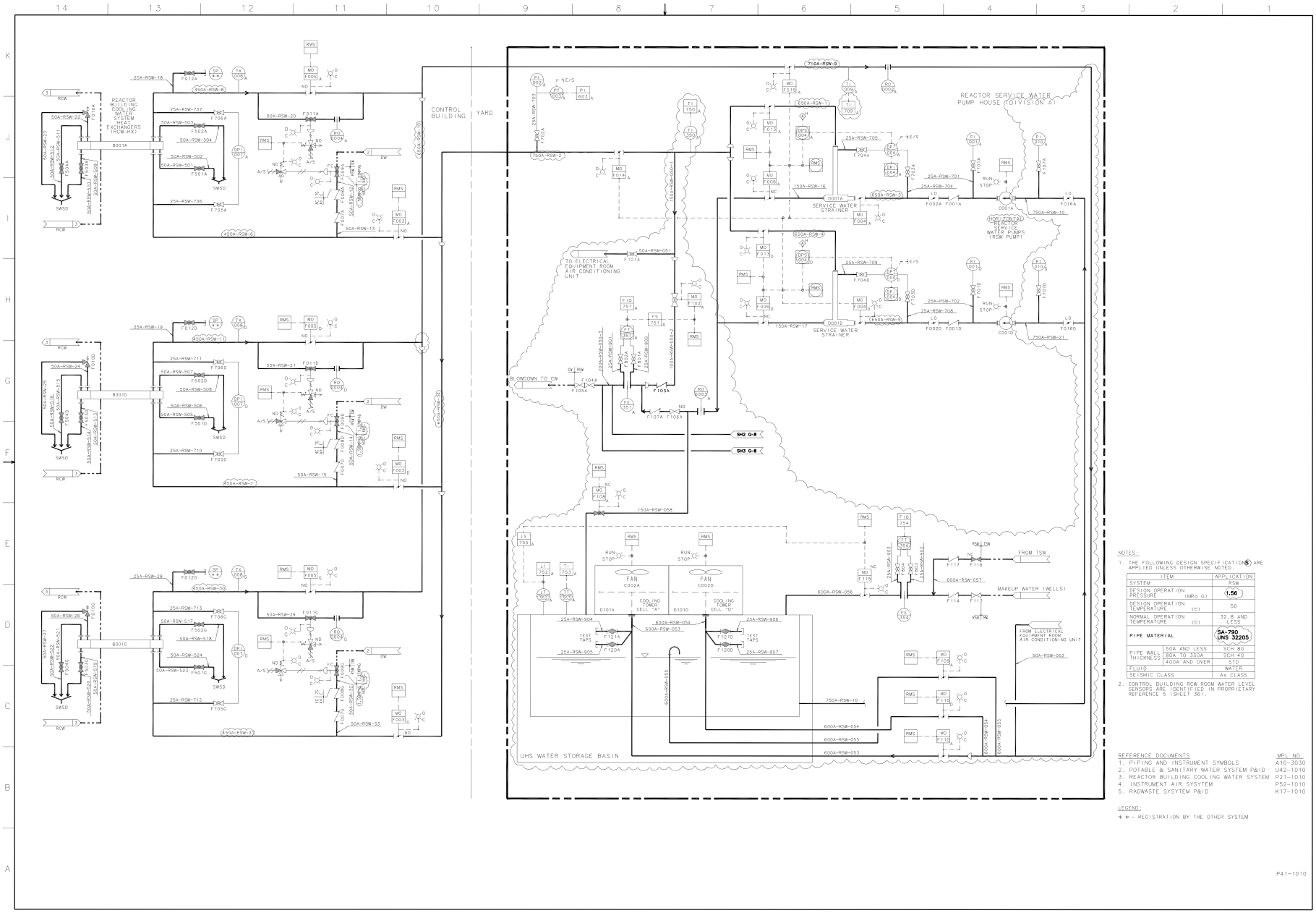

NOTES:

1. THE FOLLOWING DESIGN SPECIFICATIONS (S) ARE APPLIED UNLESS OTHERWISE NOTED.

ITEM		APPLICATION
SYSTEM		RSW
DESIGN OPERATION PRESSURE	(MPa G)	(1.56)
DESIGN OPERATION TEMPERATURE	(℃)	50
NORMAL OPERATION TEMPERATURE	(℃)	32.8 AND LESS
PIPE MATERIAL		(SA-790 UNS S2205)
PIPE WALL THICKNESS	50A AND LESS	SCH 80
	80A TO 350A	SCH 40
	400A AND OVER	STD
FLUID		WATER
SEISMIC CLASS		As CLASS

2. CONTROL BUILDING RCW ROOM WATER LEVEL SENSORS ARE IDENTIFIED IN PROPRIETARY REFERENCE 5 (SHEET 36).

REFERENCE DOCUMENTS

	MPL NO.
1. PIPING AND INSTRUMENT SYMBOLS	A10-3030
2. POTABLE & SANITARY WATER SYSTEM P&ID	L42-1010
3. REACTOR BUILDING COOLING WATER SYSTEM	P21-1010
4. INSTRUMENT AIR SYSYTEM	P52-1010
5. RADWASTE SYSYTEM P&ID	K17-1010

LEGEND:

* * - REGISTRATION BY THE OTHER SYSTEM

P41-1010

FIGURE 9.2-7 REACTOR SERVICE WATER SYSTEM P&ID (Sheet 1 of 3)

STP 3&4 Rev.2

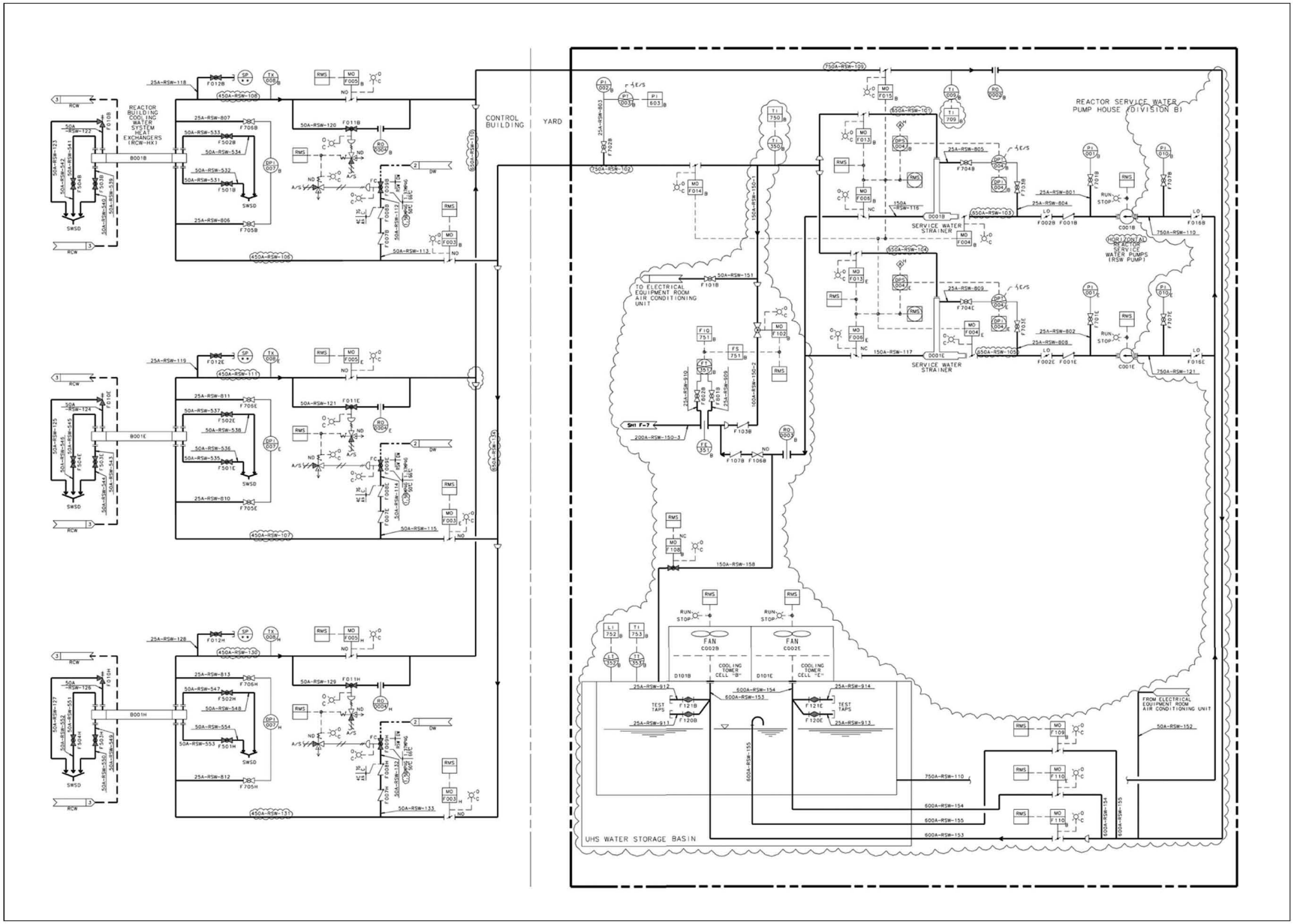

FIGURE 9.2-7 REACTOR SERVICE WATER SYSTEM P&ID (Sheet 2 of 3)

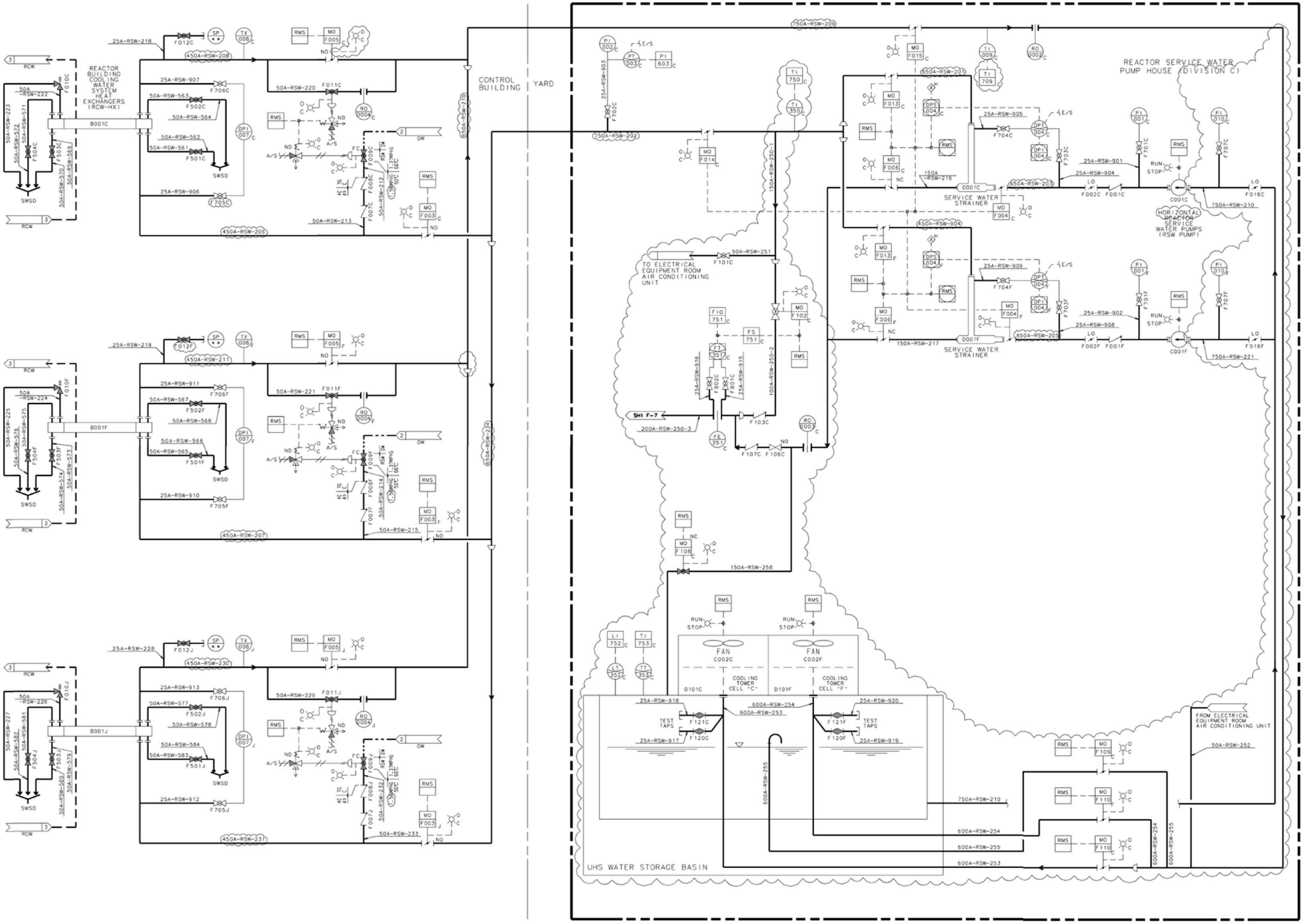

FIGURE 9.2-7 REACTOR SERVICE WATER SYSTEM P&ID (Sheet 3 of 3)

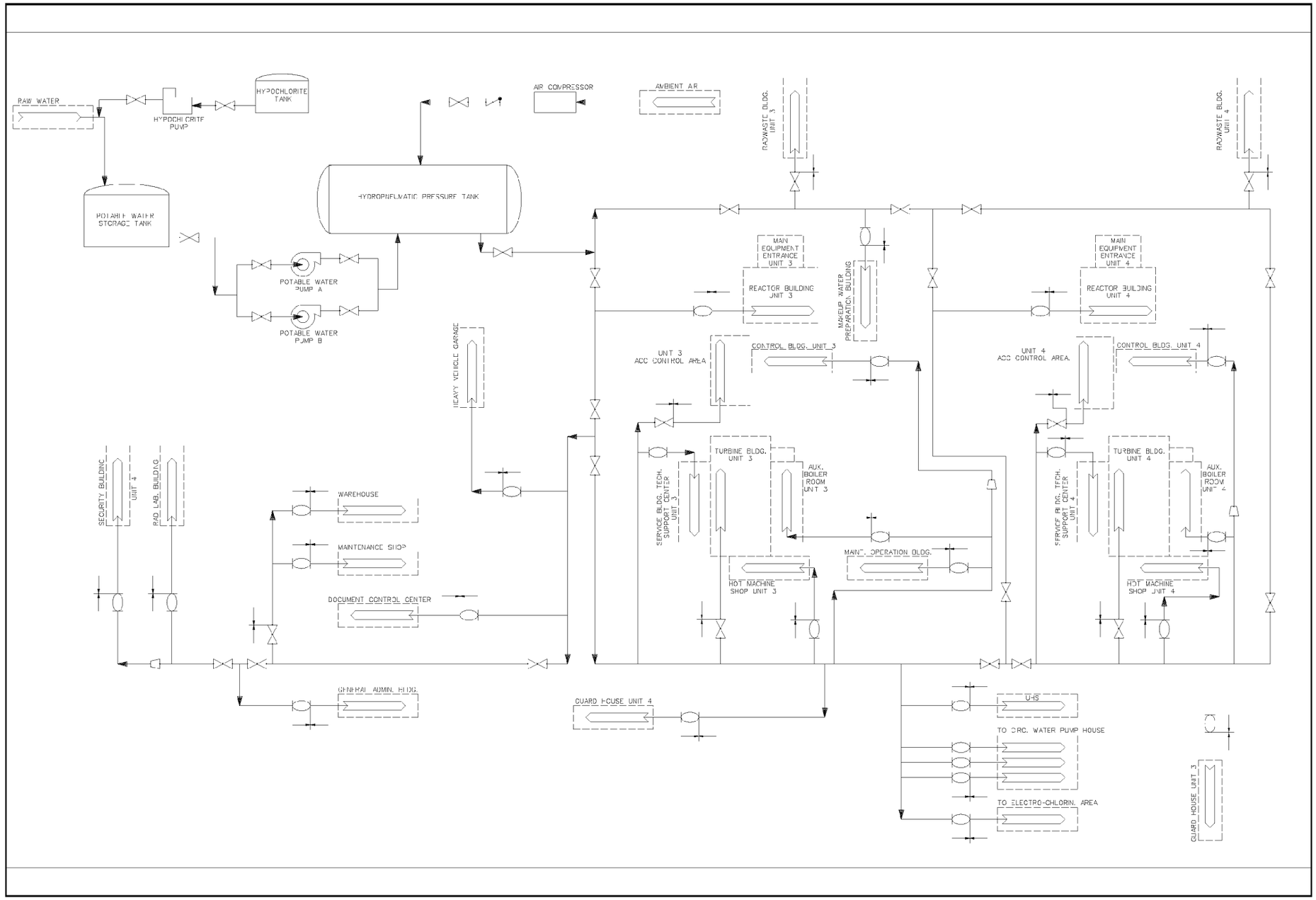

FIGURE 9.2-9b POTABLE WATER SYSTEM P&ID

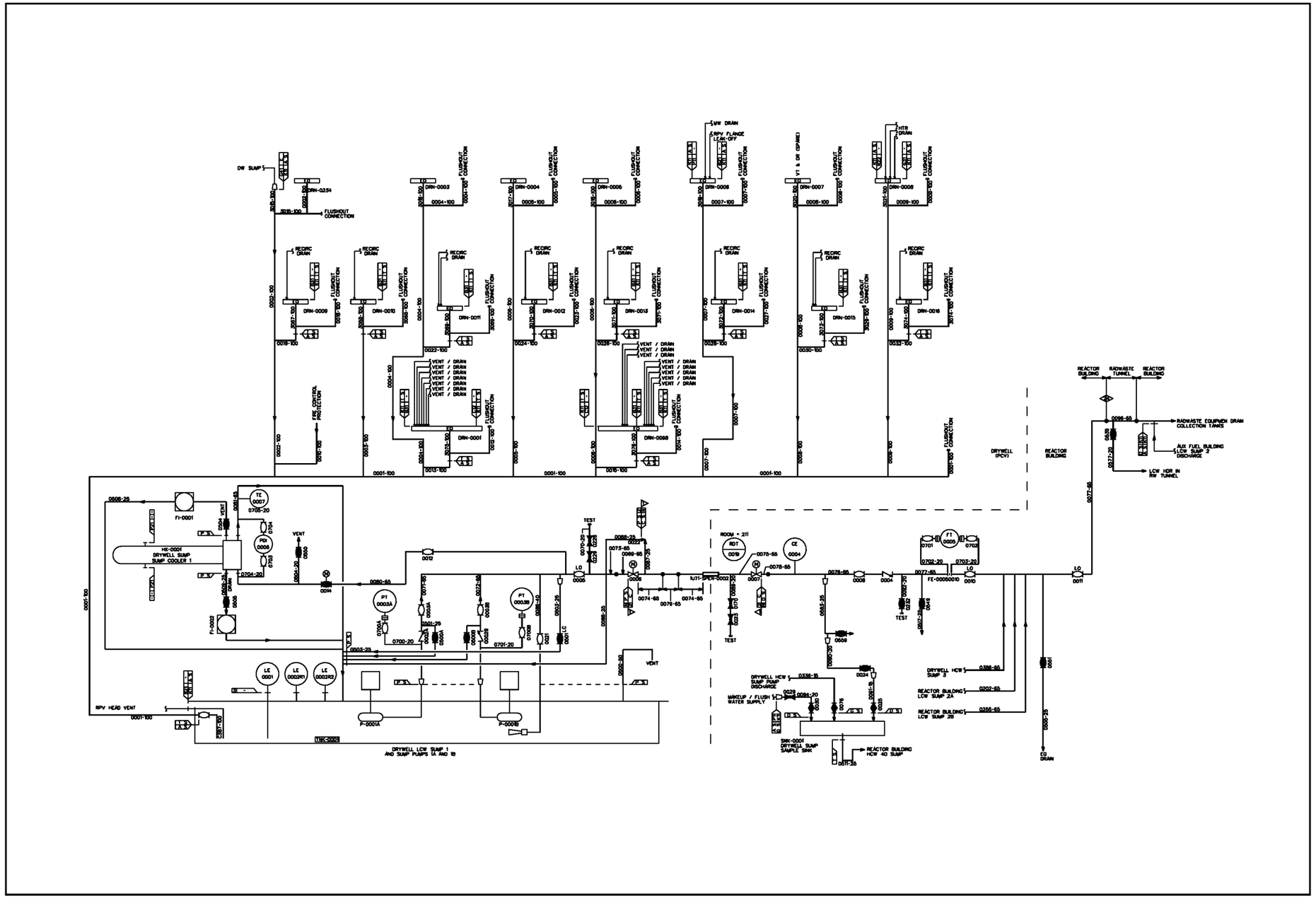

FIGURE 9.3-11 PIPING AND INSTRUMENTATION DIAGRAM, RADIOACTIVE DRAIN TRANSFER (SHEET 1 0F 22)

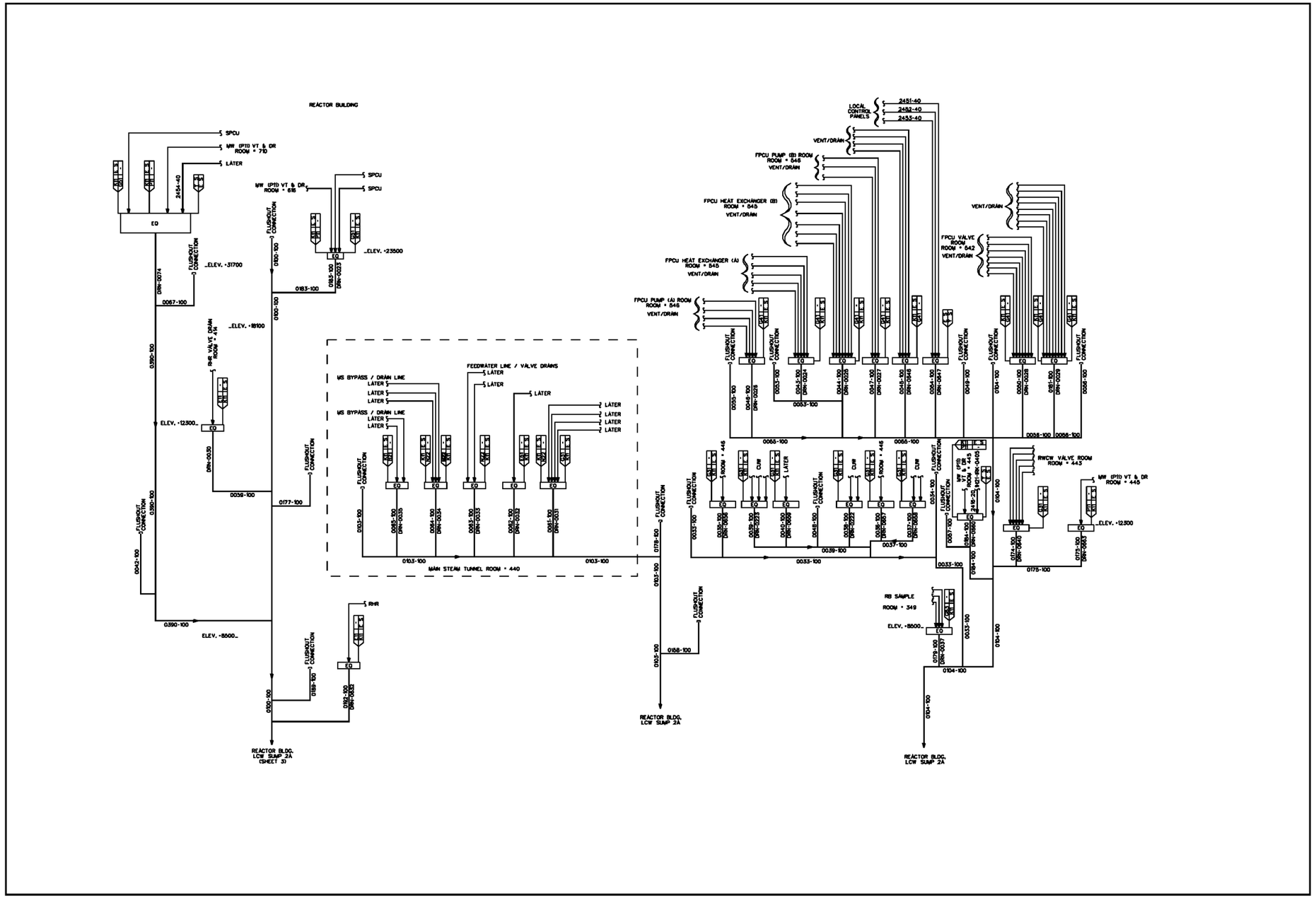

FIGURE 9.3-11 PIPING AND INSTRUMENTATION DIAGRAM, RADIOACTIVE DRAIN TRANSFER (SHEET 2 0F 22)

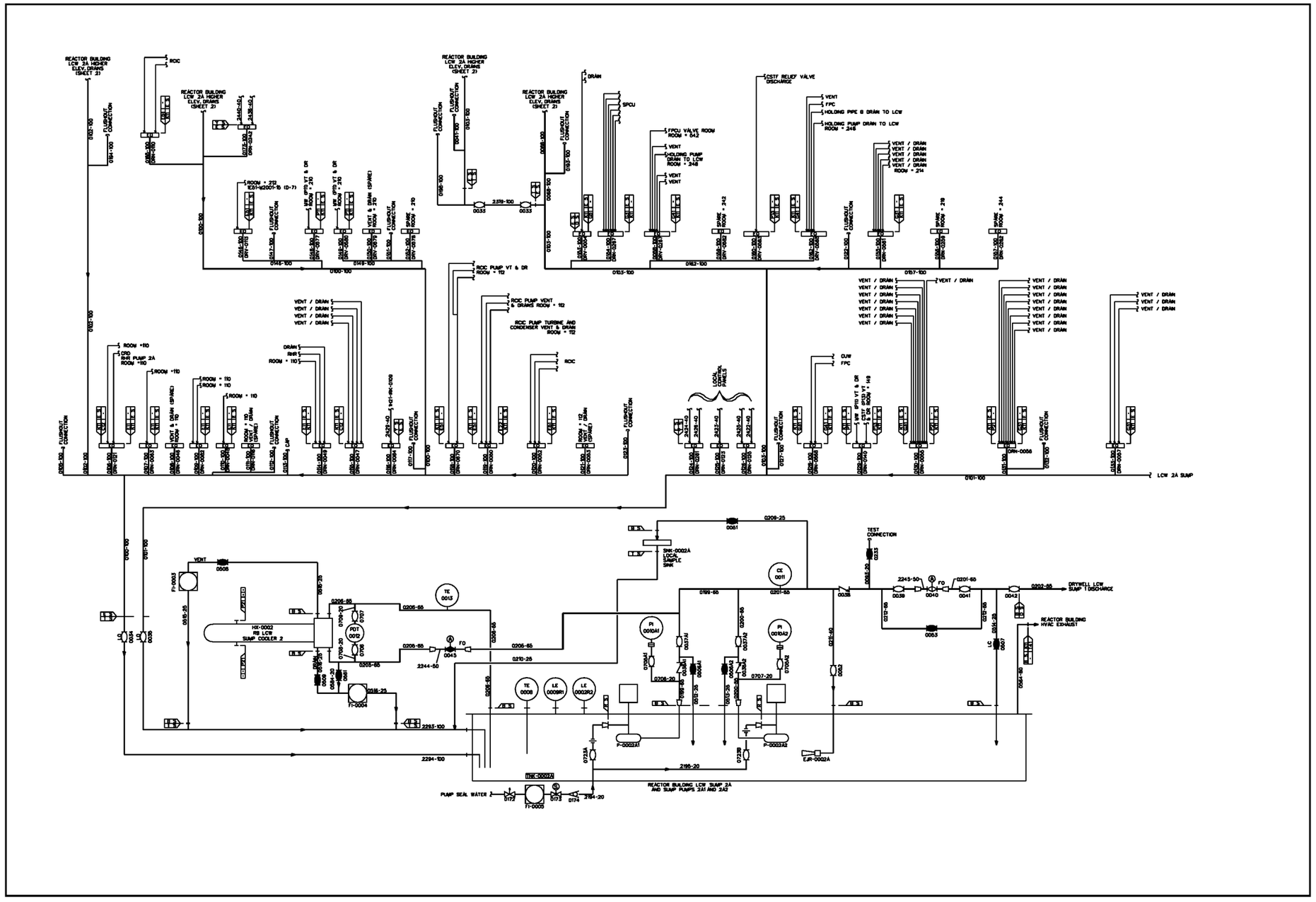

FIGURE 9.3-11 PIPING AND INSTRUMENTATION DIAGRAM, RADIOACTIVE DRAIN TRANSFER (SHEET 3 0F 22)

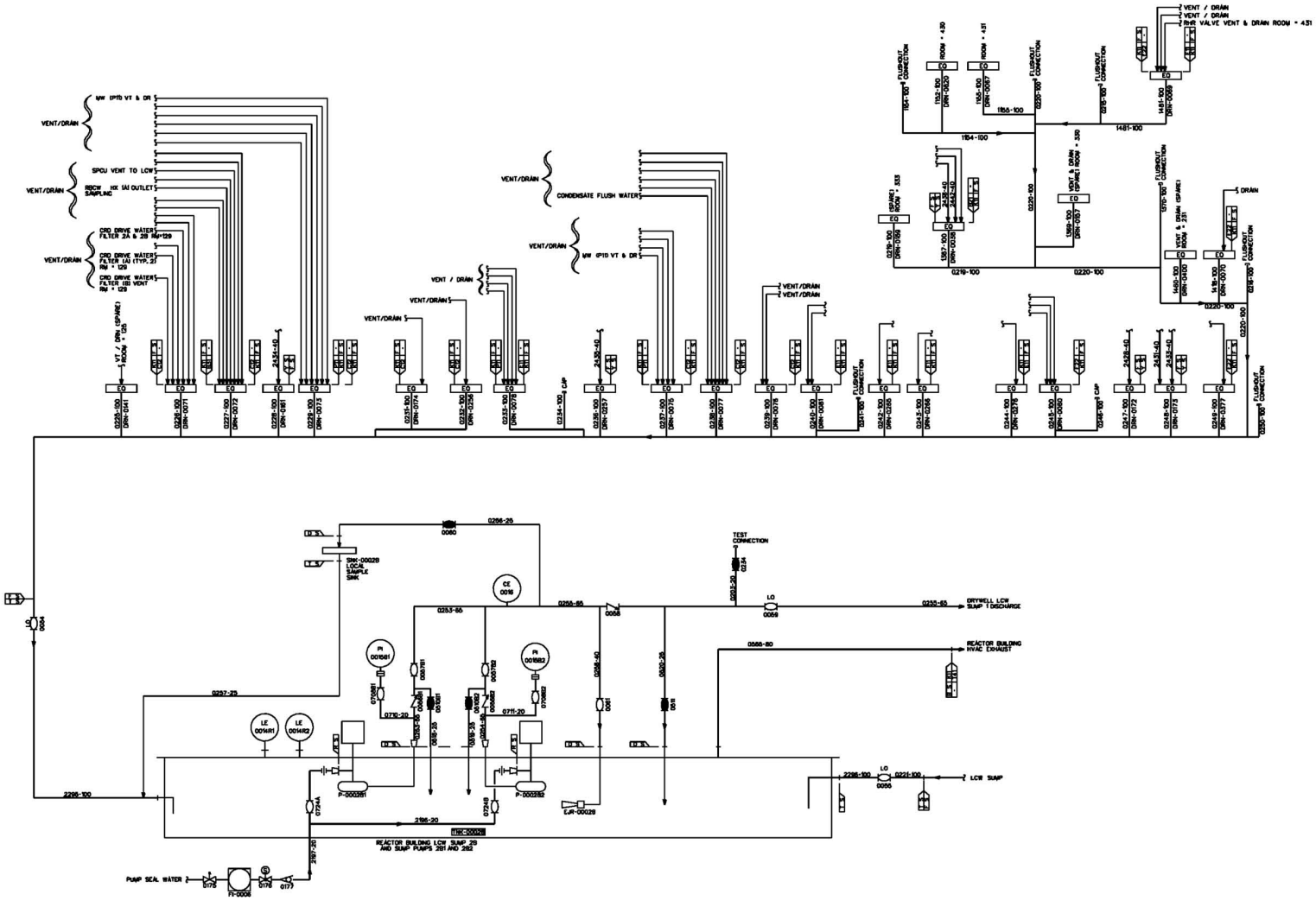

FIGURE 9.3-11 PIPING AND INSTRUMENTATION DIAGRAM, RADIOACTIVE DRAIN TRANSFER (SHEET 4 0F 22)

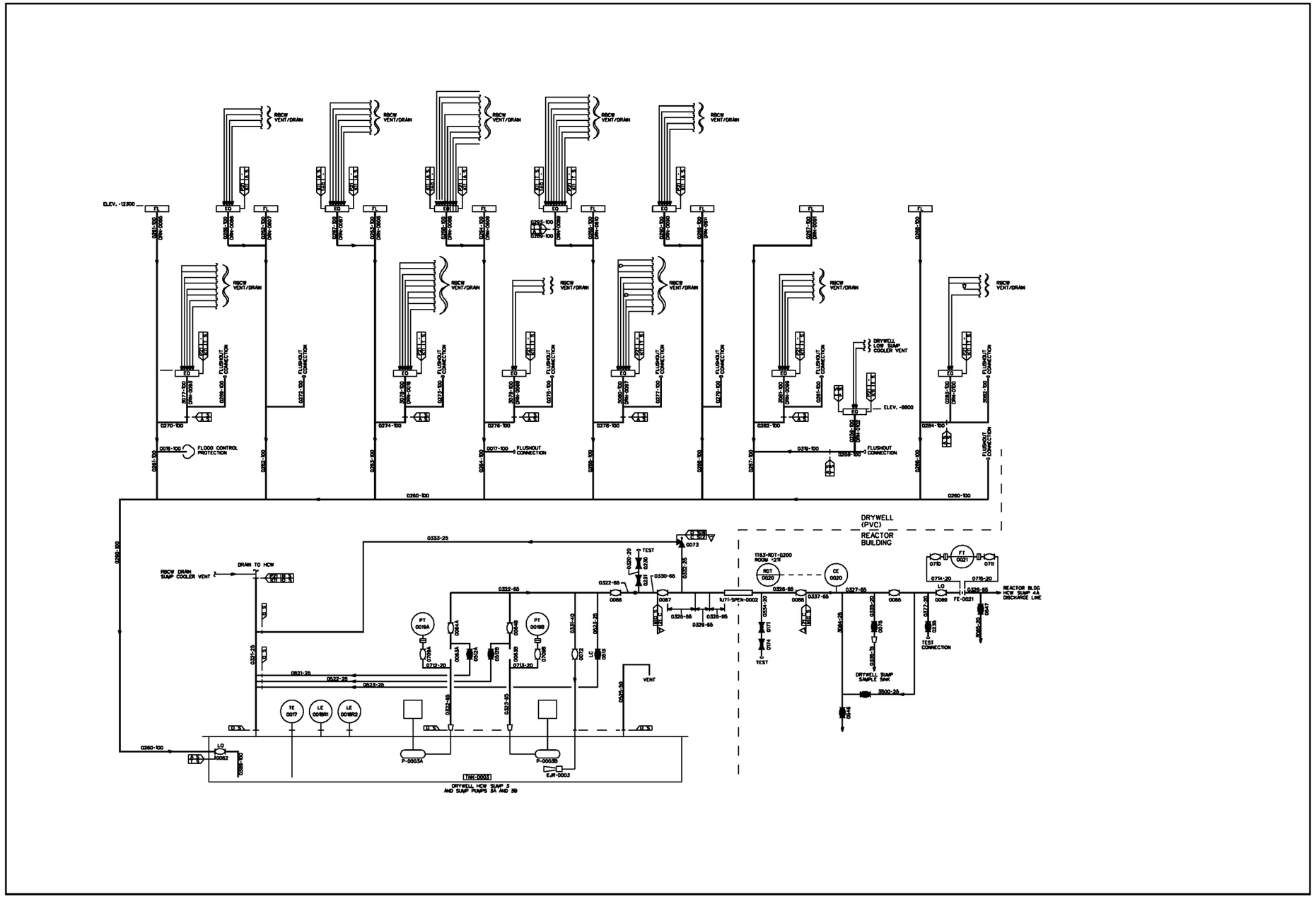

FIGURE 9.3-11 PIPING AND INSTRUMENTATION DIAGRAM, RADIOACTIVE DRAIN TRANSFER (SHEET 5 0F 22)

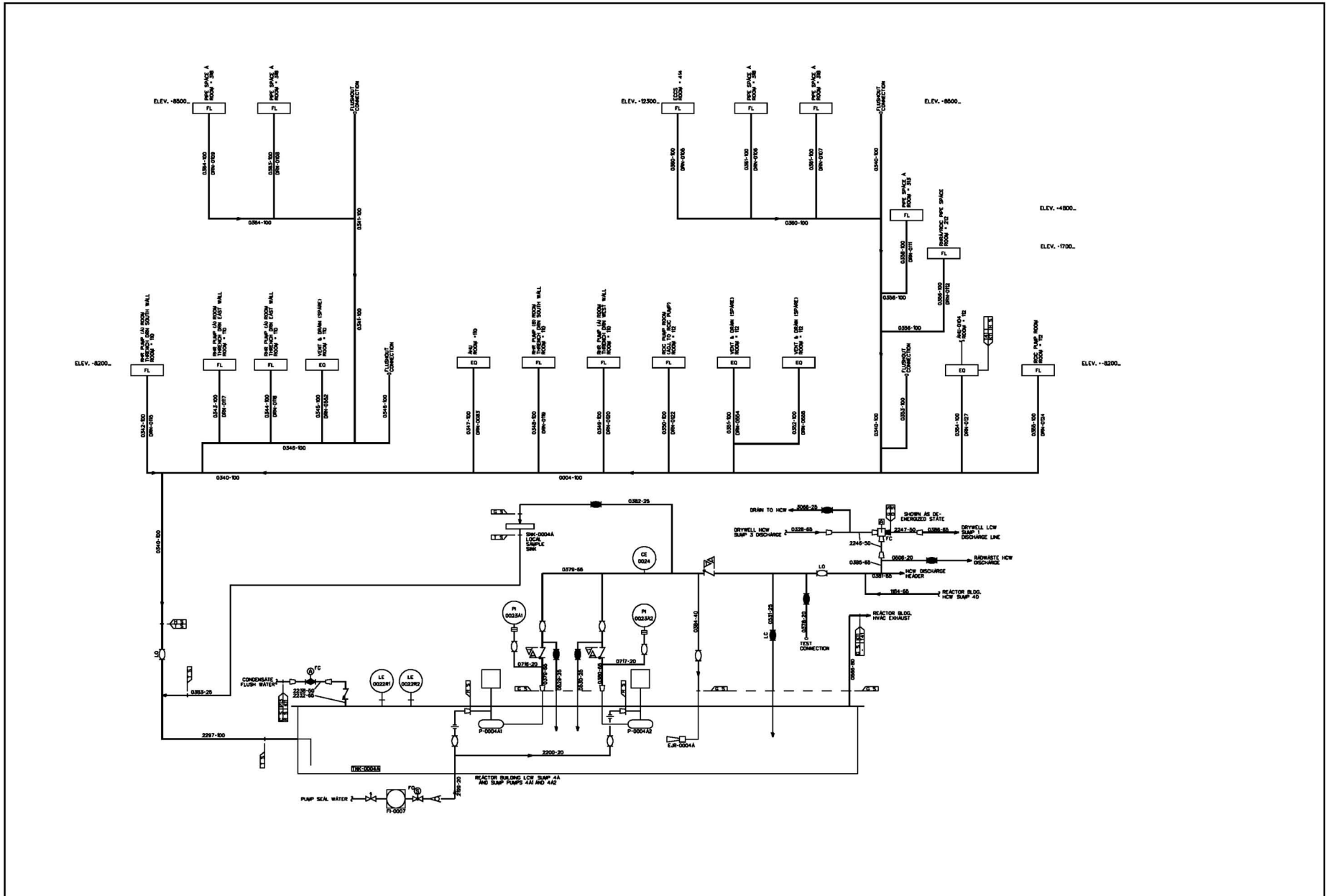

FIGURE 9.3-11 PIPING AND INSTRUMENTATION DIAGRAM, RADIOACTIVE DRAIN TRANSFER (SHEET 6 0F 22)

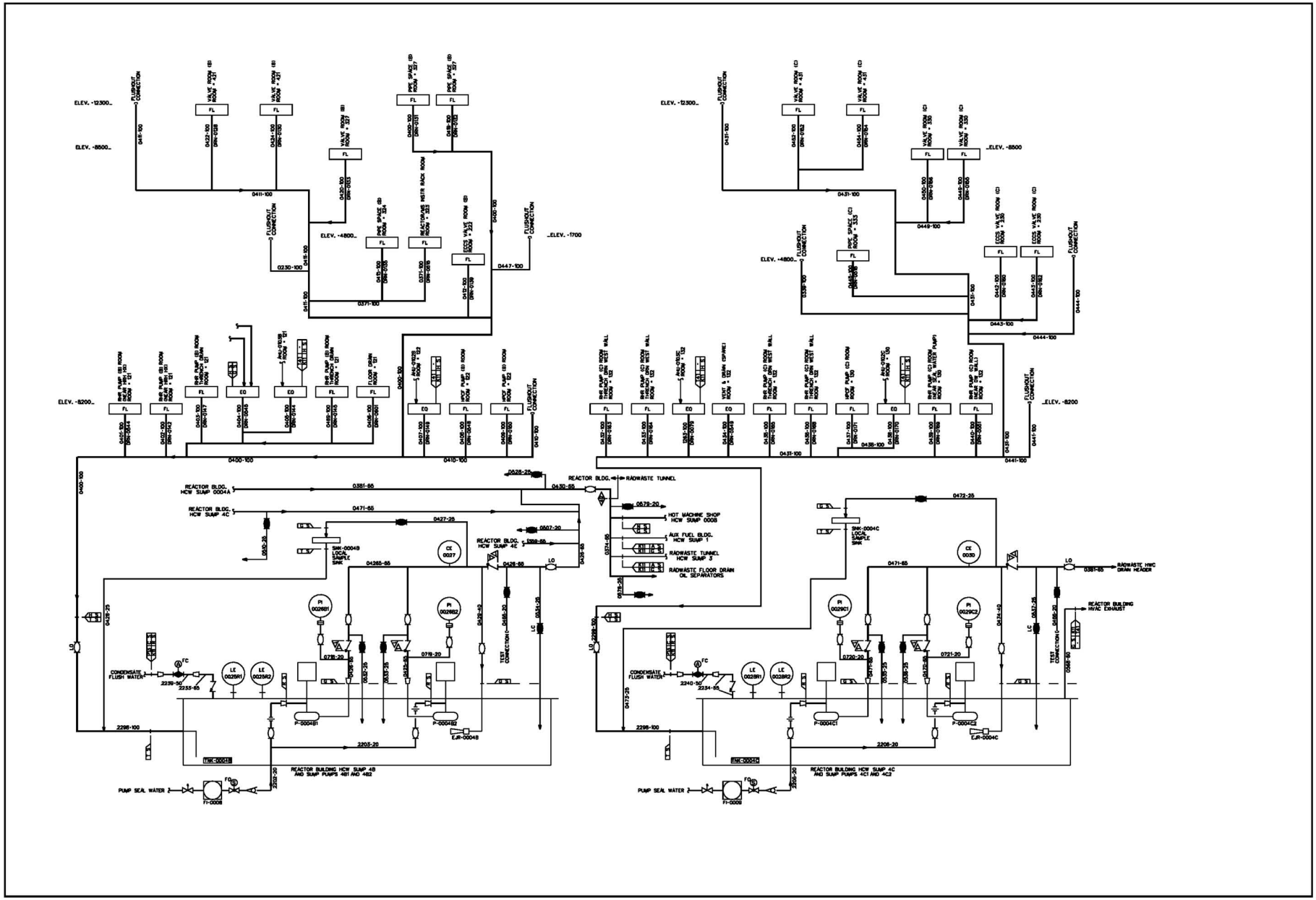

FIGURE 9.3-11 PIPING AND INSTRUMENTATION DIAGRAM, RADIOACTIVE DRAIN TRANSFER (SHEET 7 0F 22)

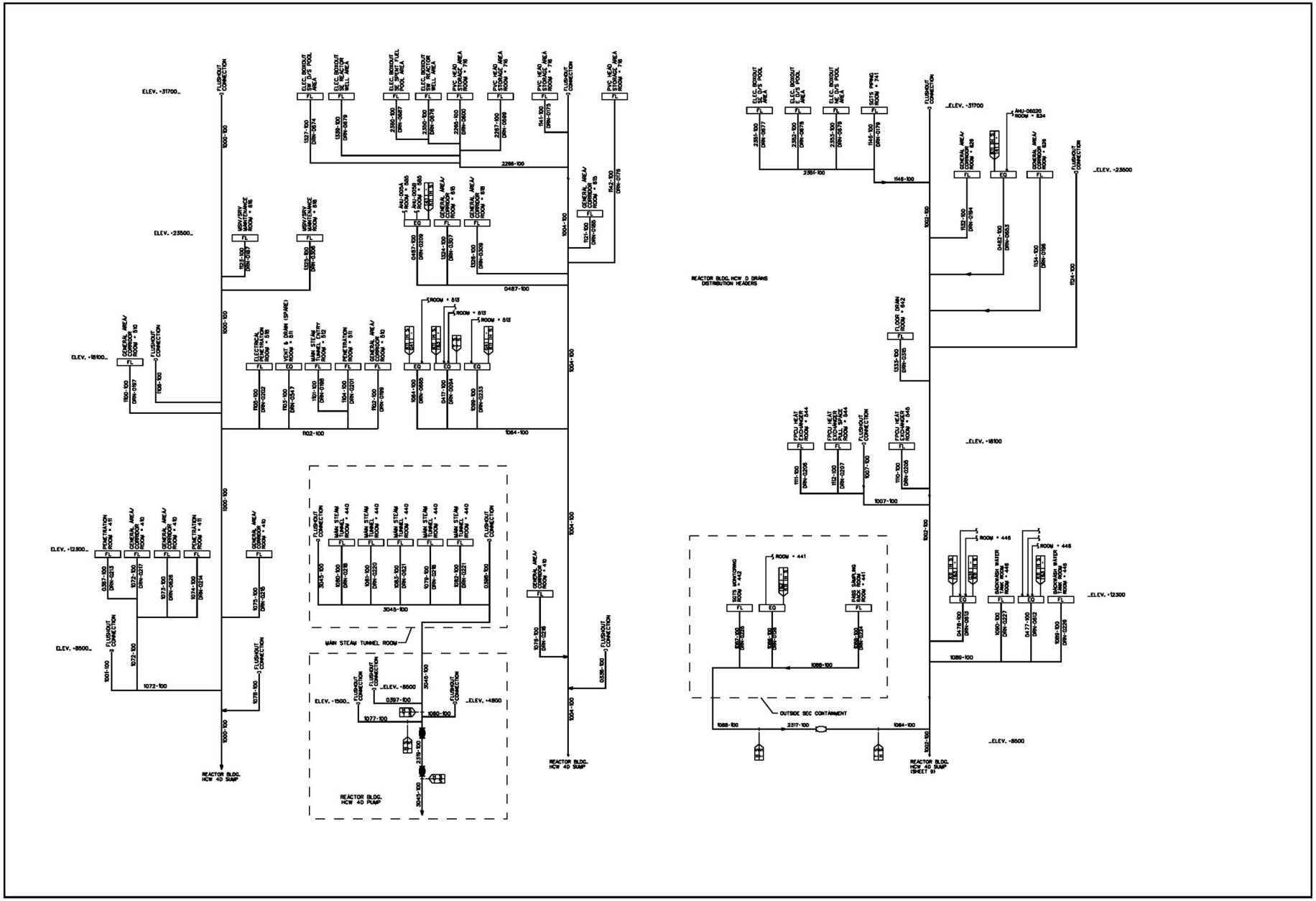

FIGURE 9.3-11 PIPING AND INSTRUMENTATION DIAGRAM, RADIOACTIVE DRAIN TRANSFER (SHEET 8 0F 22)

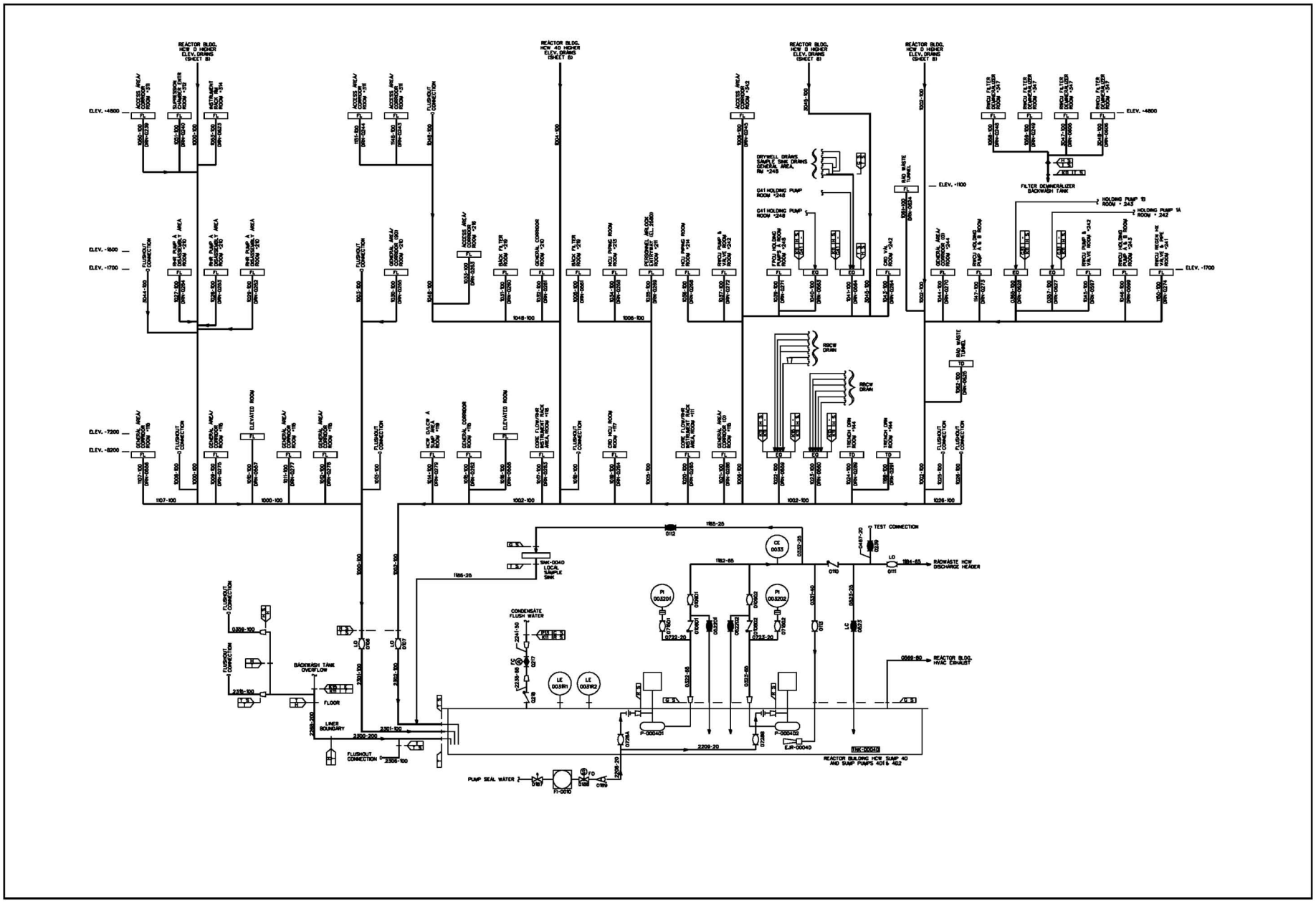

FIGURE 9.3-11 PIPING AND INSTRUMENTATION DIAGRAM, RADIOACTIVE DRAIN TRANSFER (SHEET 9 0F 22)

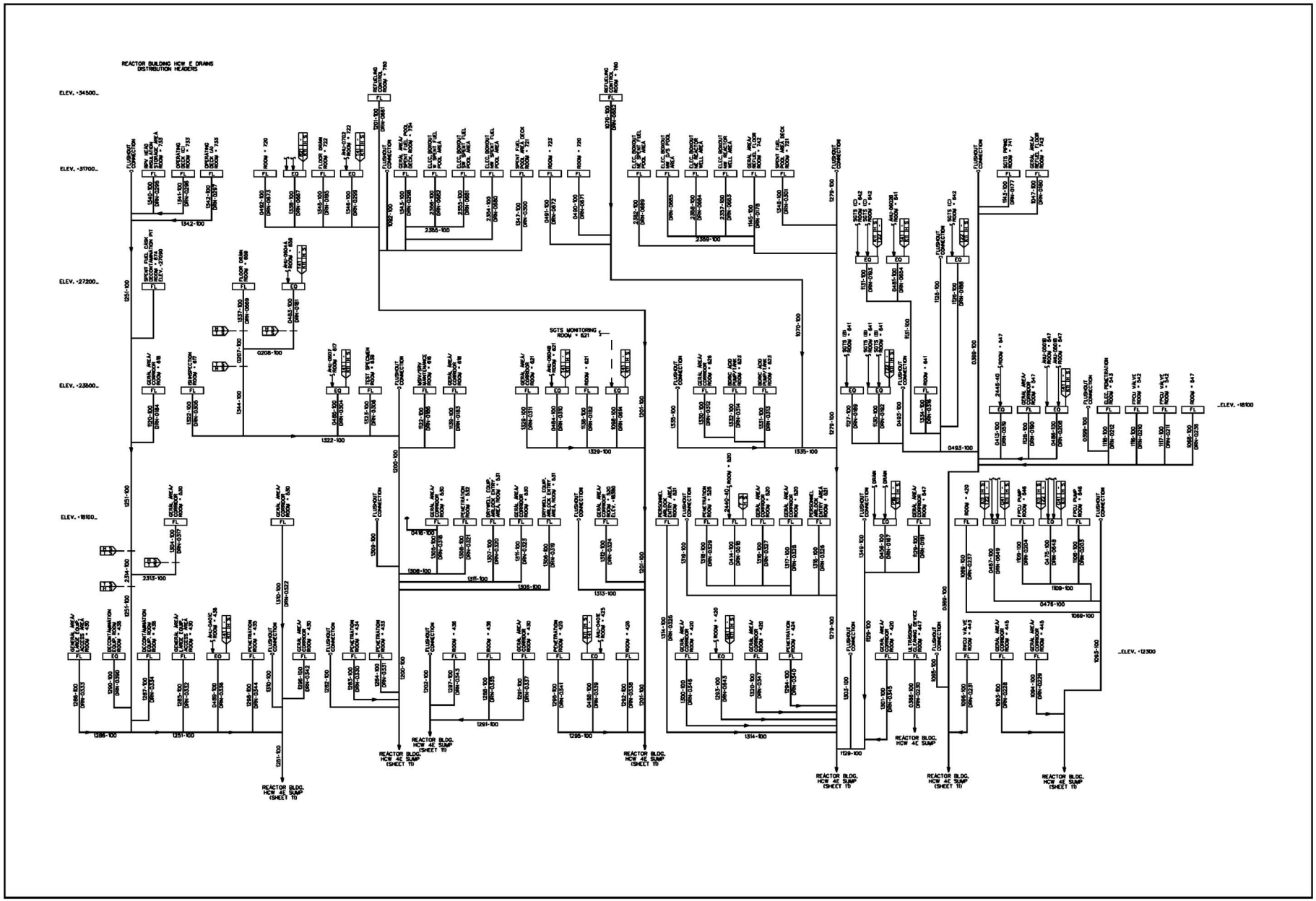

FIGURE 9.3-11 PIPING AND INSTRUMENTATION DIAGRAM, RADIOACTIVE DRAIN TRANSFER (SHEET 10 0F 22)

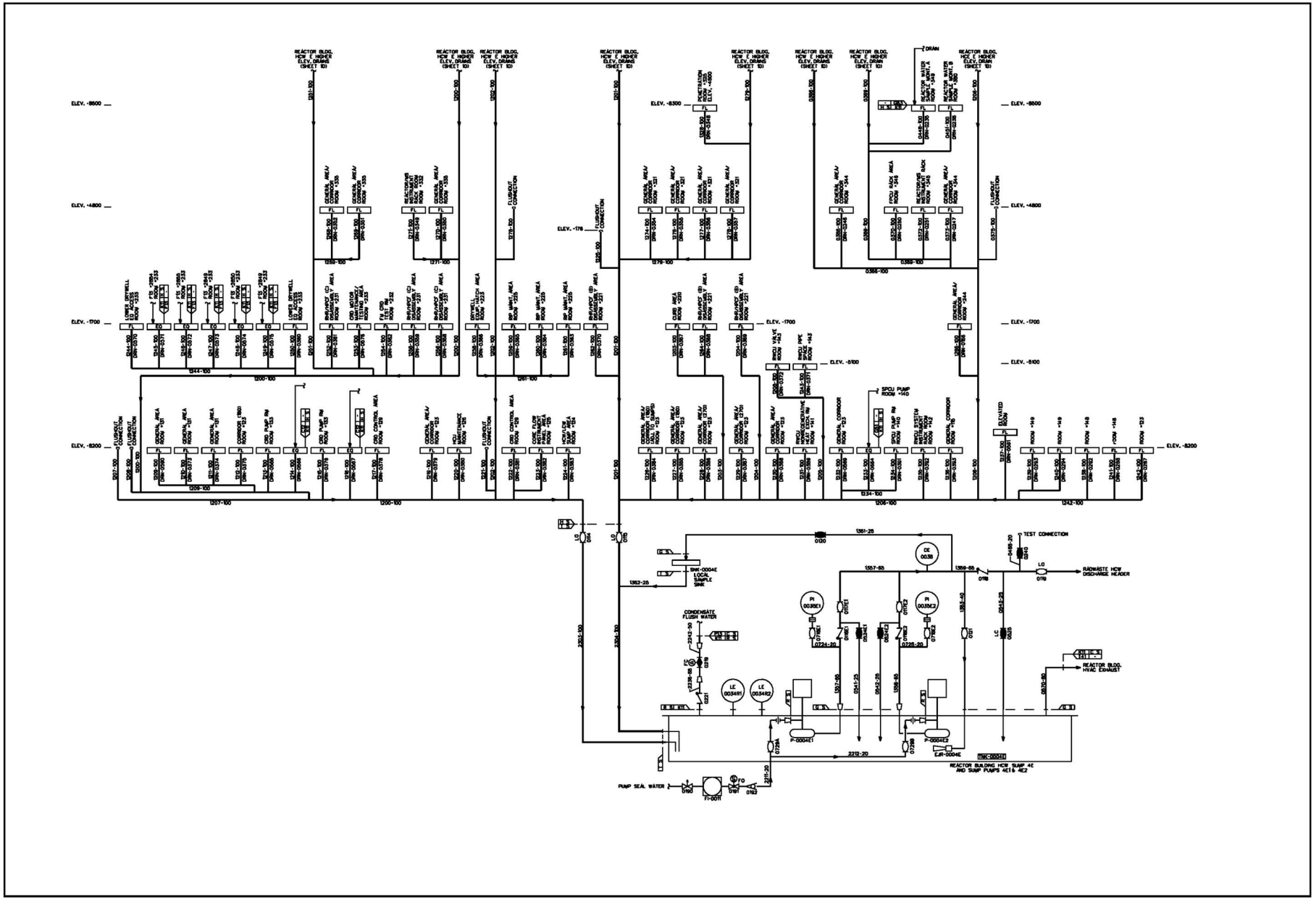

FIGURE 9.3-11 PIPING AND INSTRUMENTATION DIAGRAM, RADIOACTIVE DRAIN TRANSFER (SHEET 11 0F 22)

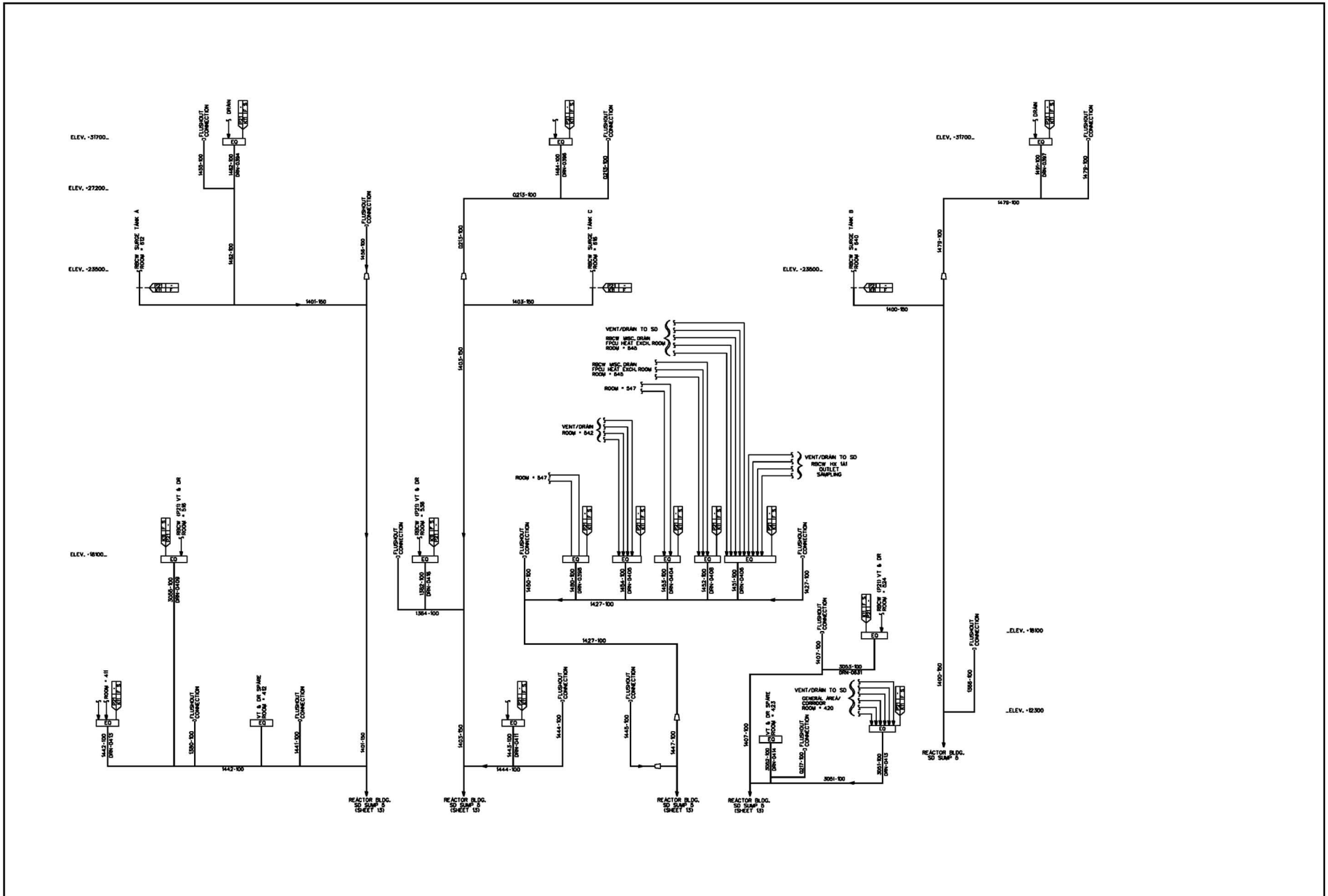

FIGURE 9.3-11 PIPING AND INSTRUMENTATION DIAGRAM, RADIOACTIVE DRAIN TRANSFER (SHEET 12 0F 22)

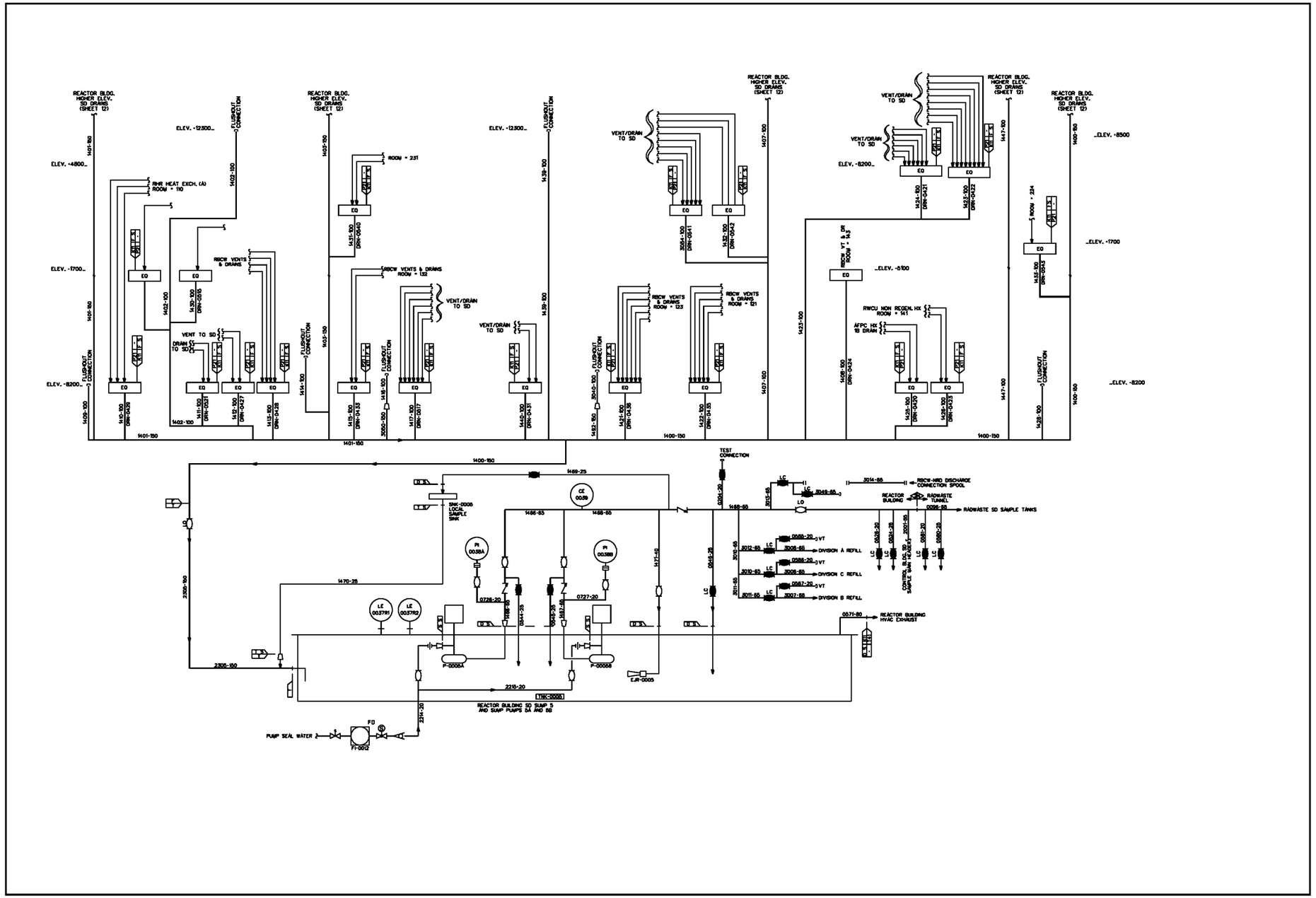

FIGURE 9.3-11 PIPING AND INSTRUMENTATION DIAGRAM, RADIOACTIVE DRAIN TRANSFER (SHEET 13 0F 22)

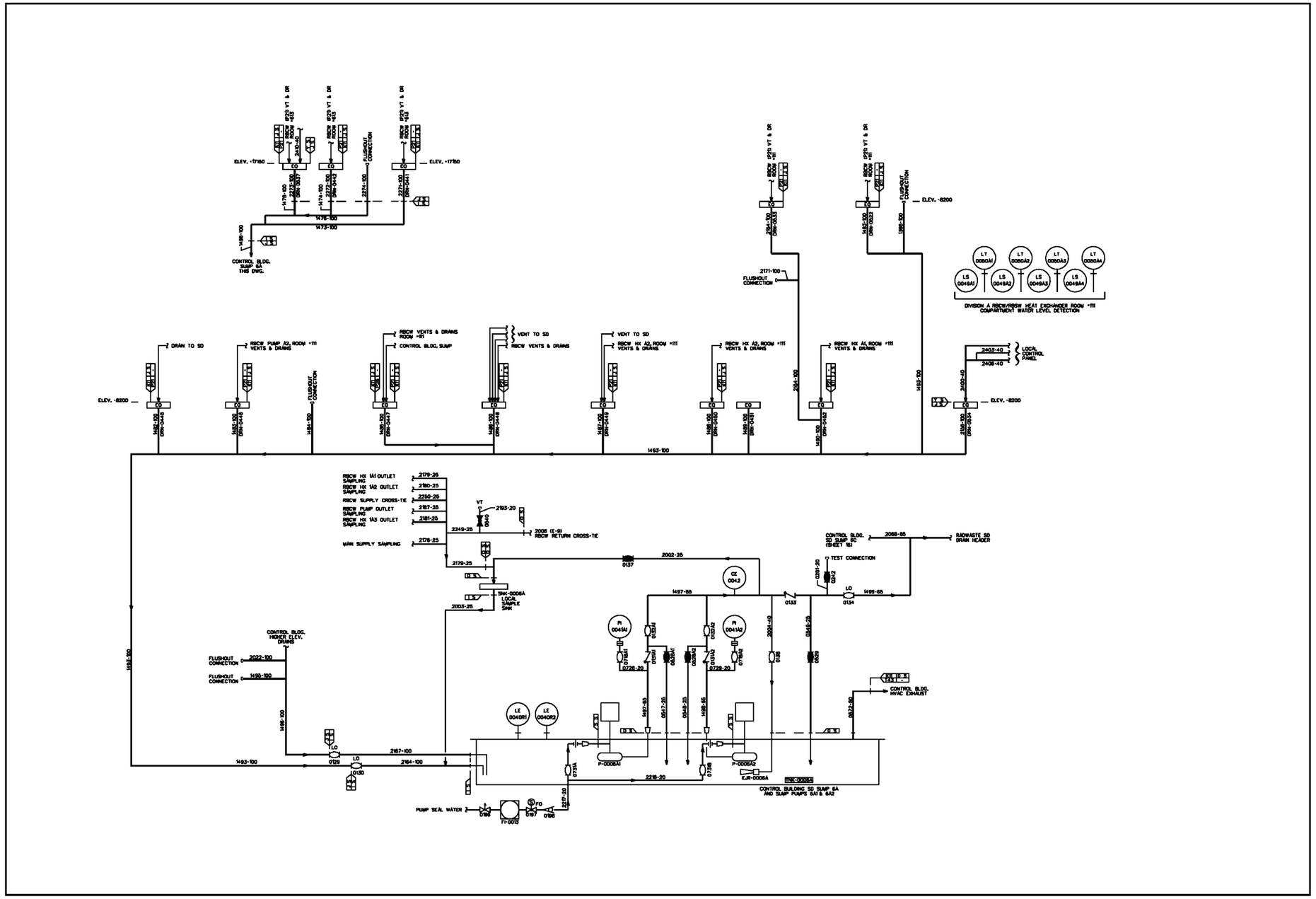

FIGURE 9.3-11 PIPING AND INSTRUMENTATION DIAGRAM, RADIOACTIVE DRAIN TRANSFER (SHEET 14 0F 22)

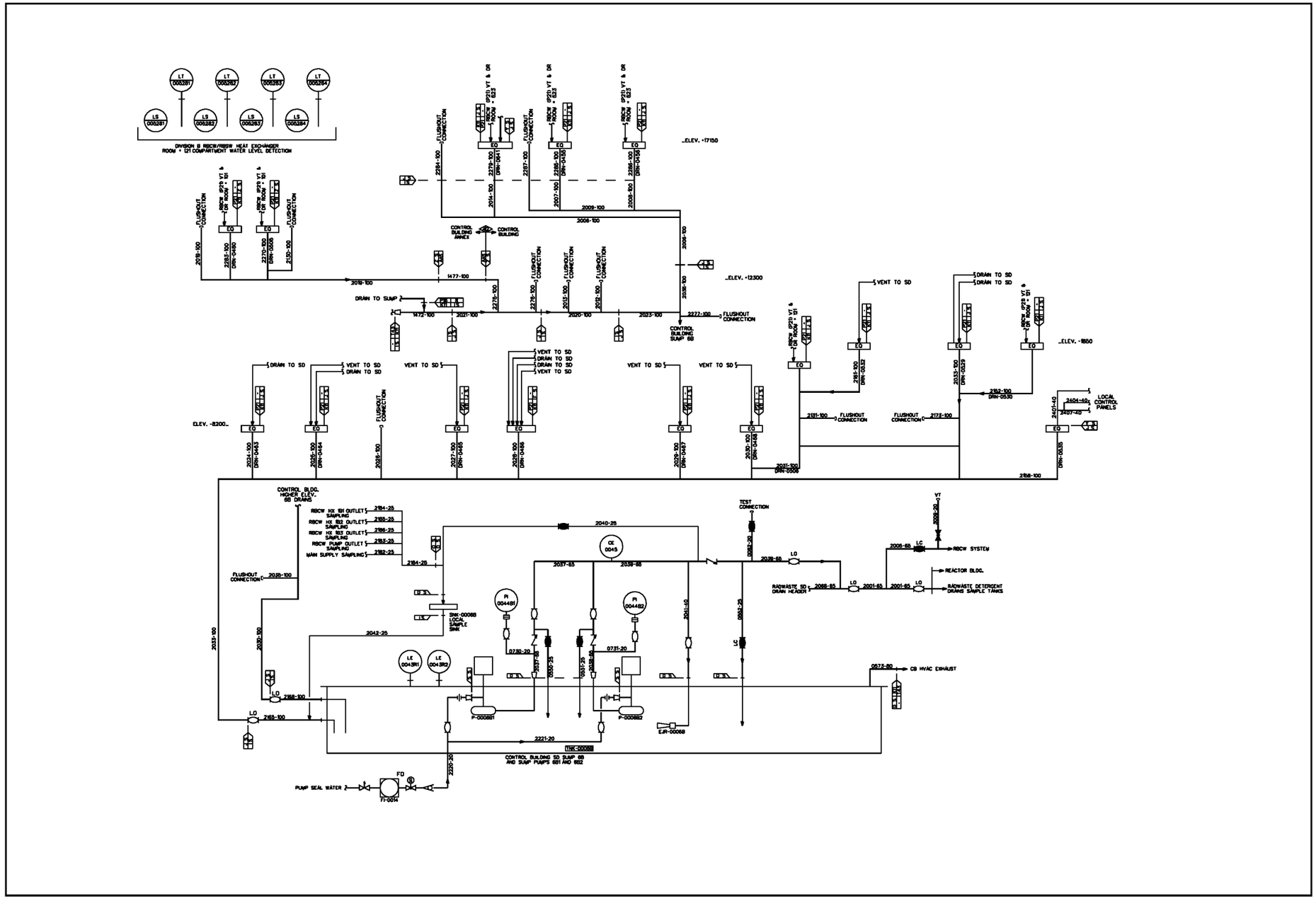

FIGURE 9.3-11 PIPING AND INSTRUMENTATION DIAGRAM, RADIOACTIVE DRAIN TRANSFER (SHEET 15 0F 22)

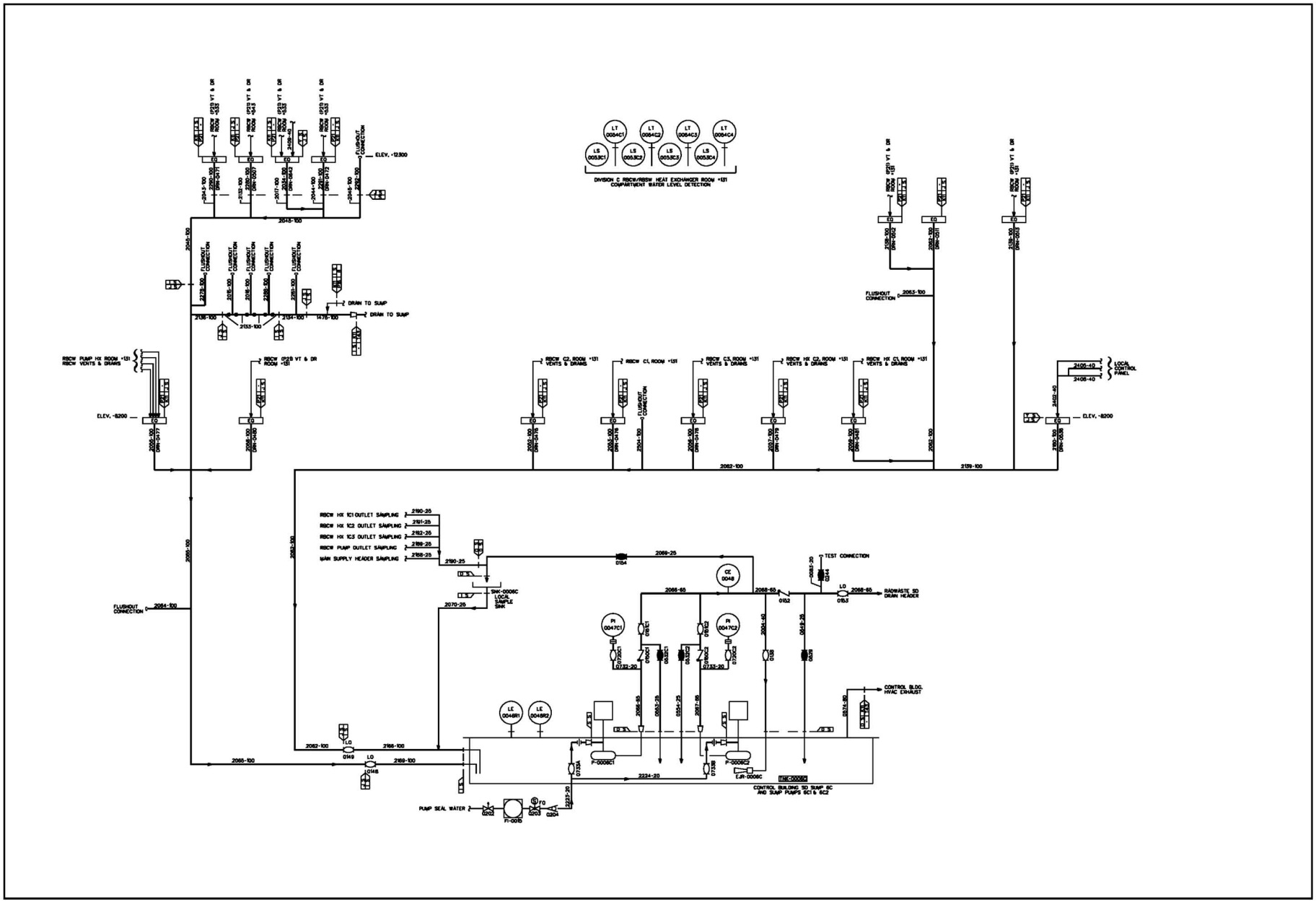

FIGURE 9.3-11 PIPING AND INSTRUMENTATION DIAGRAM, RADIOACTIVE DRAIN TRANSFER (SHEET 16 0F 22)

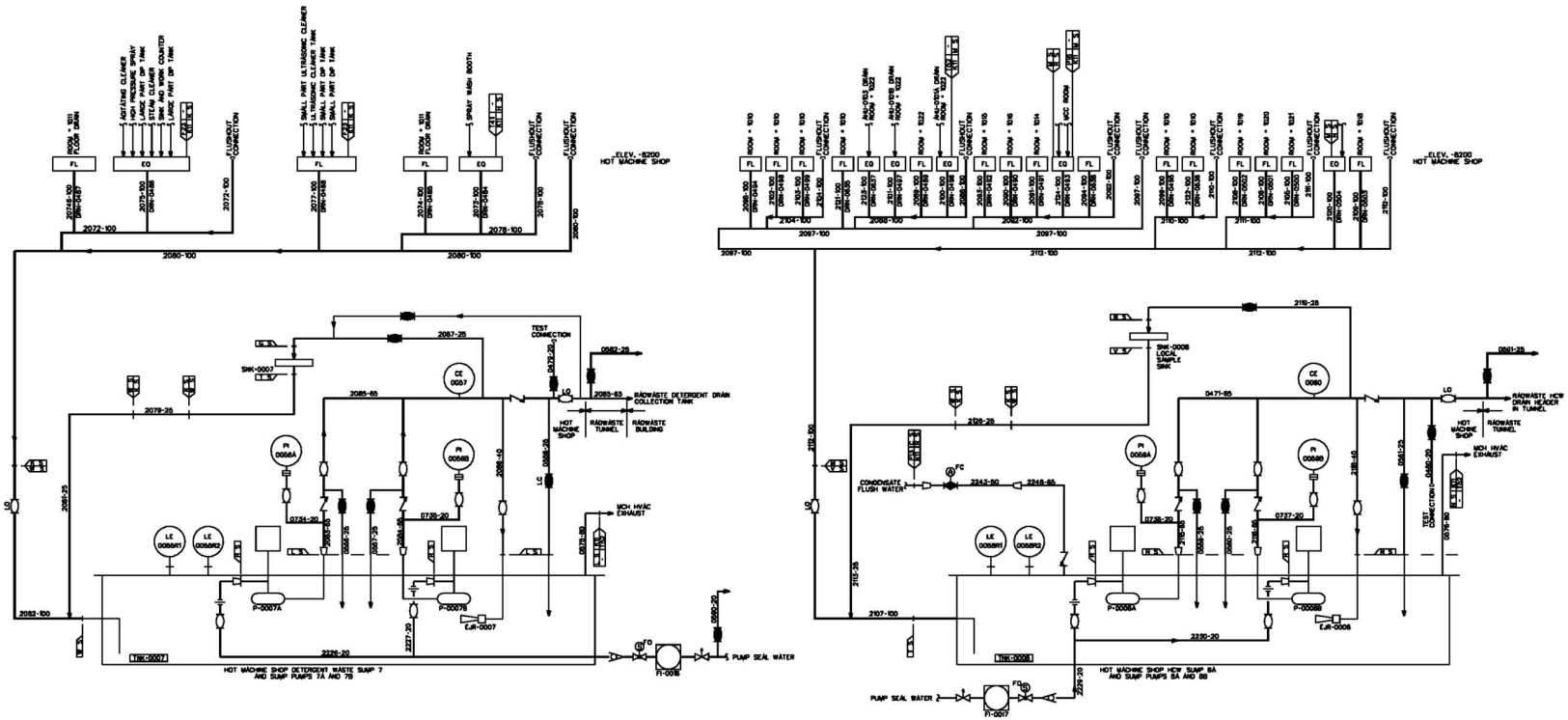

FIGURE 9.3-11 PIPING AND INSTRUMENTATION DIAGRAM, RADIOACTIVE DRAIN TRANSFER (SHEET 17 0F 22)

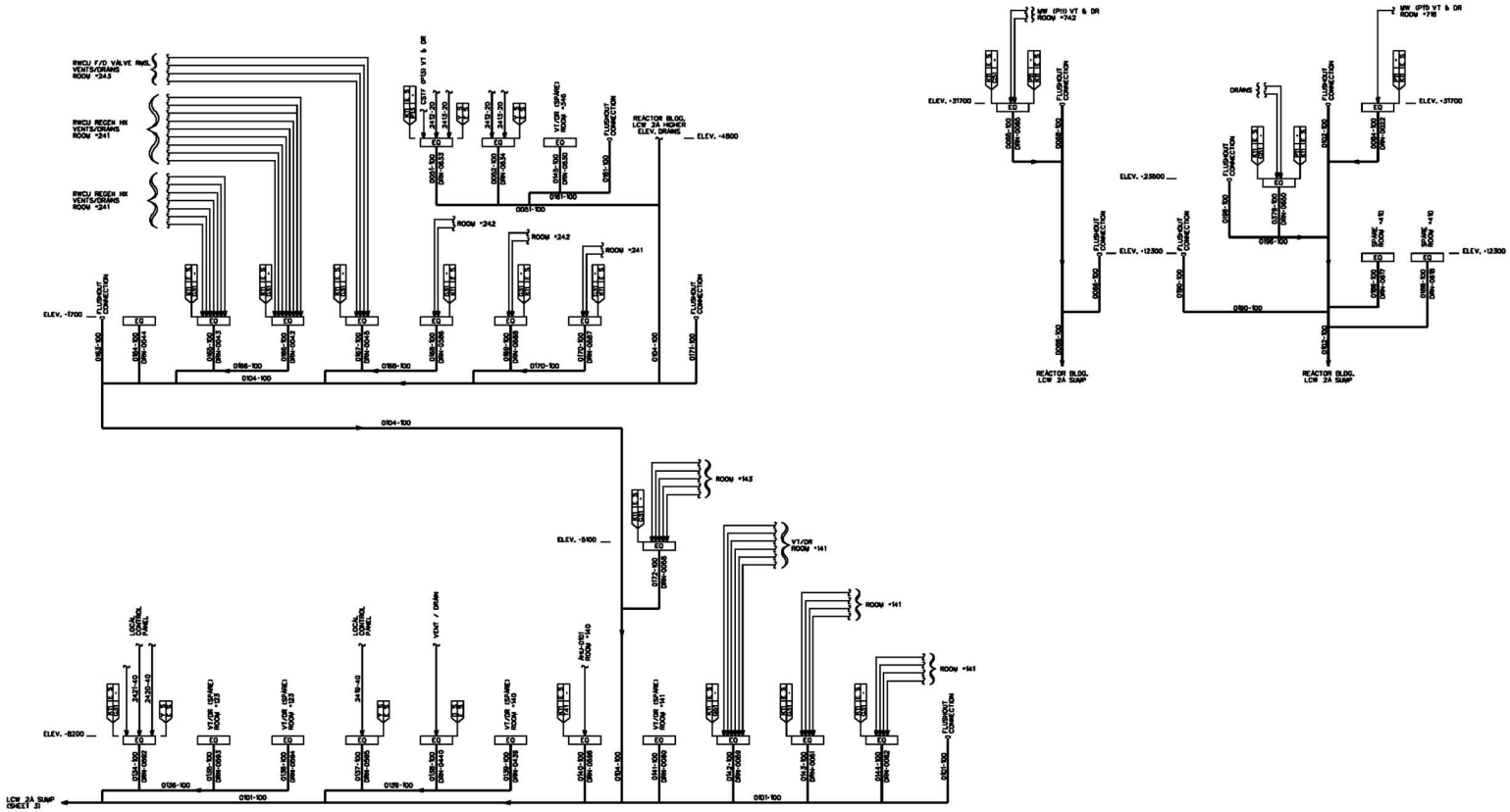

FIGURE 9.3-11 PIPING AND INSTRUMENTATION DIAGRAM, RADIOACTIVE DRAIN TRANSFER (SHEET 18 0F 22)

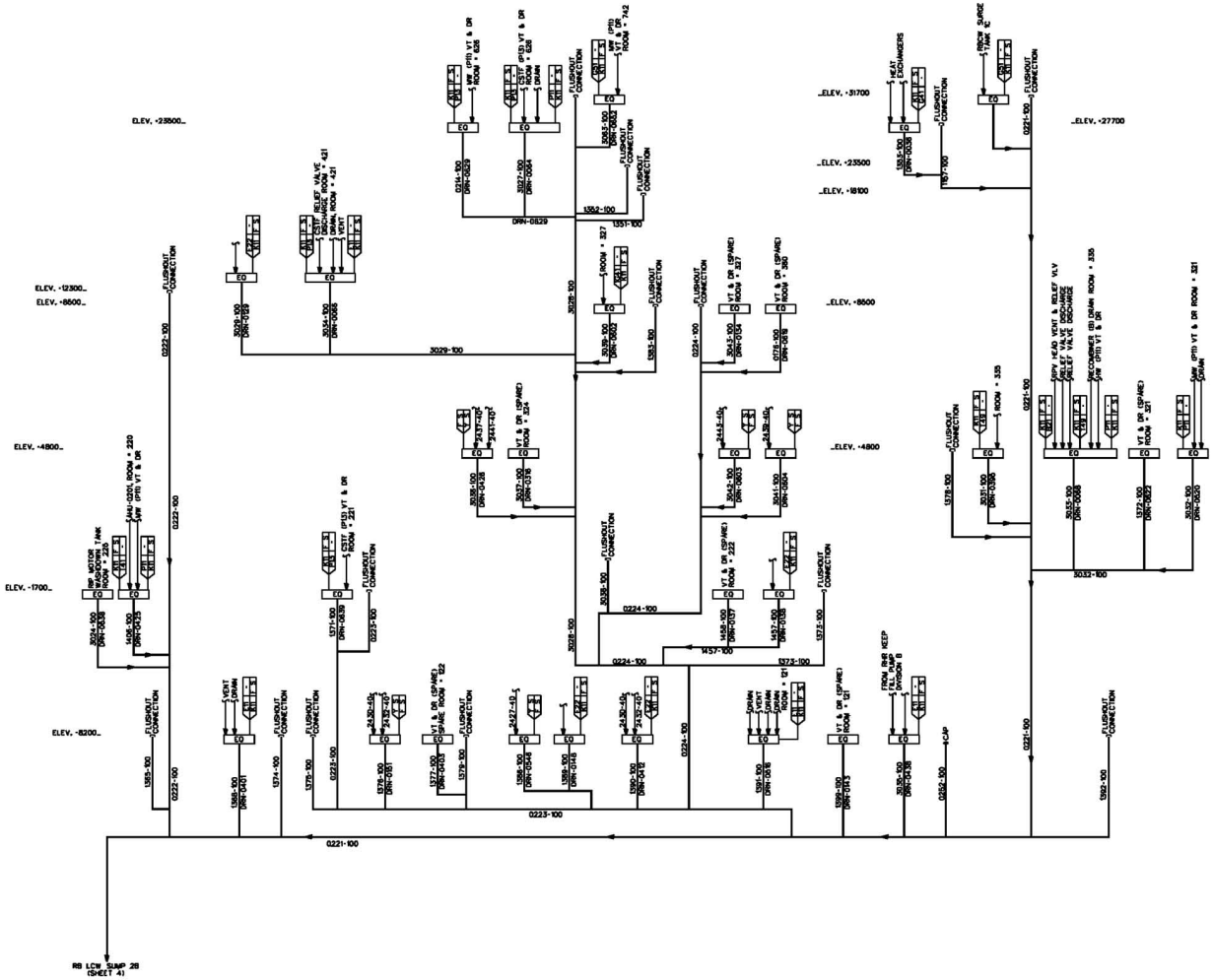

FIGURE 9.3-11 PIPING AND INSTRUMENTATION DIAGRAM, RADIOACTIVE DRAIN TRANSFER (SHEET 19 0F 22)

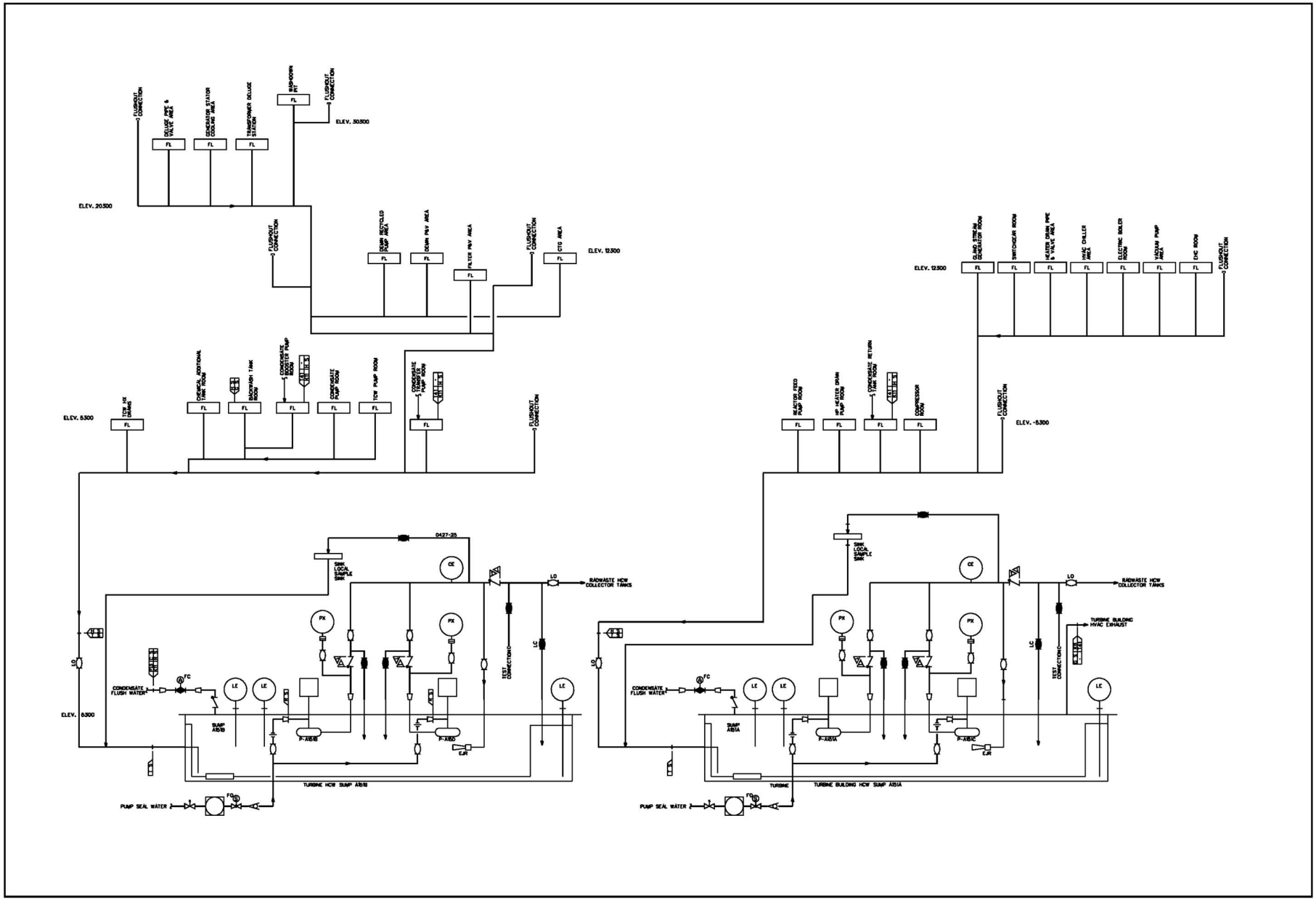

FIGURE 9.3-11 PIPING AND INSTRUMENTATION DIAGRAM, RADIOACTIVE DRAIN TRANSFER (SHEET 20 0F 22)

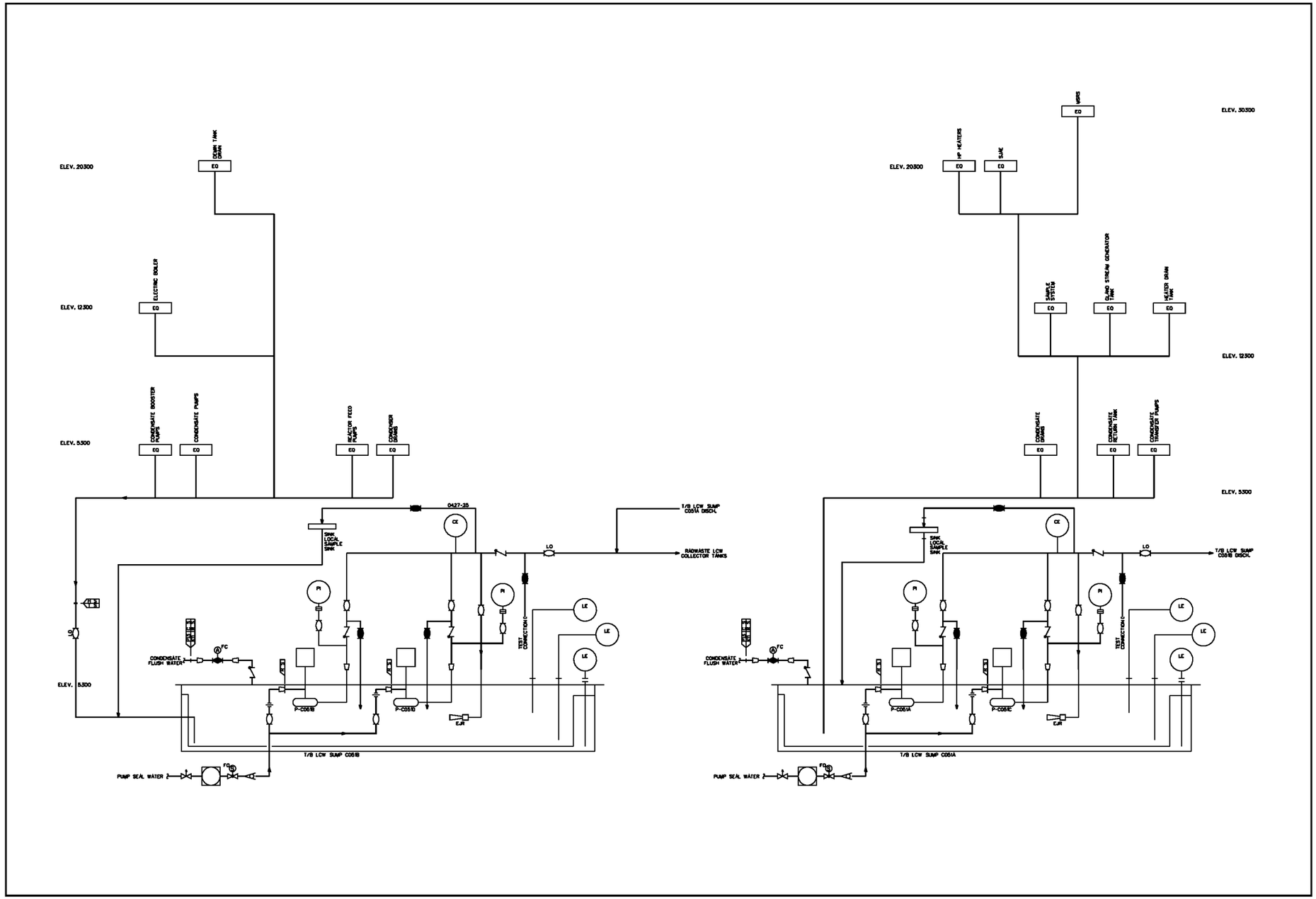

FIGURE 9.3-11 PIPING AND INSTRUMENTATION DIAGRAM, RADIOACTIVE DRAIN TRANSFER (SHEET 21 0F 22)

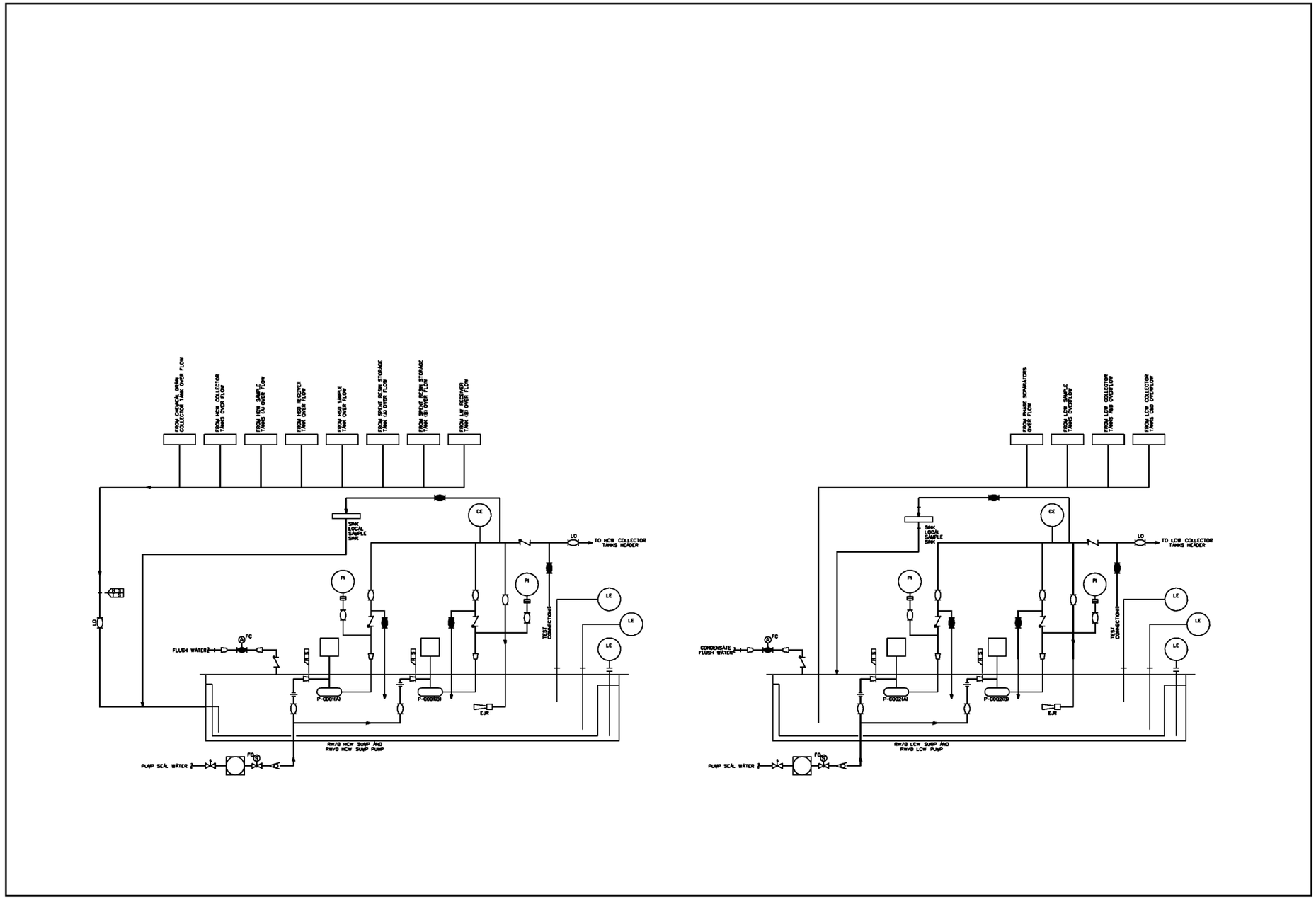

FIGURE 9.3-11 PIPING AND INSTRUMENTATION DIAGRAM, RADIOACTIVE DRAIN TRANSFER (SHEET 22 0F 22)

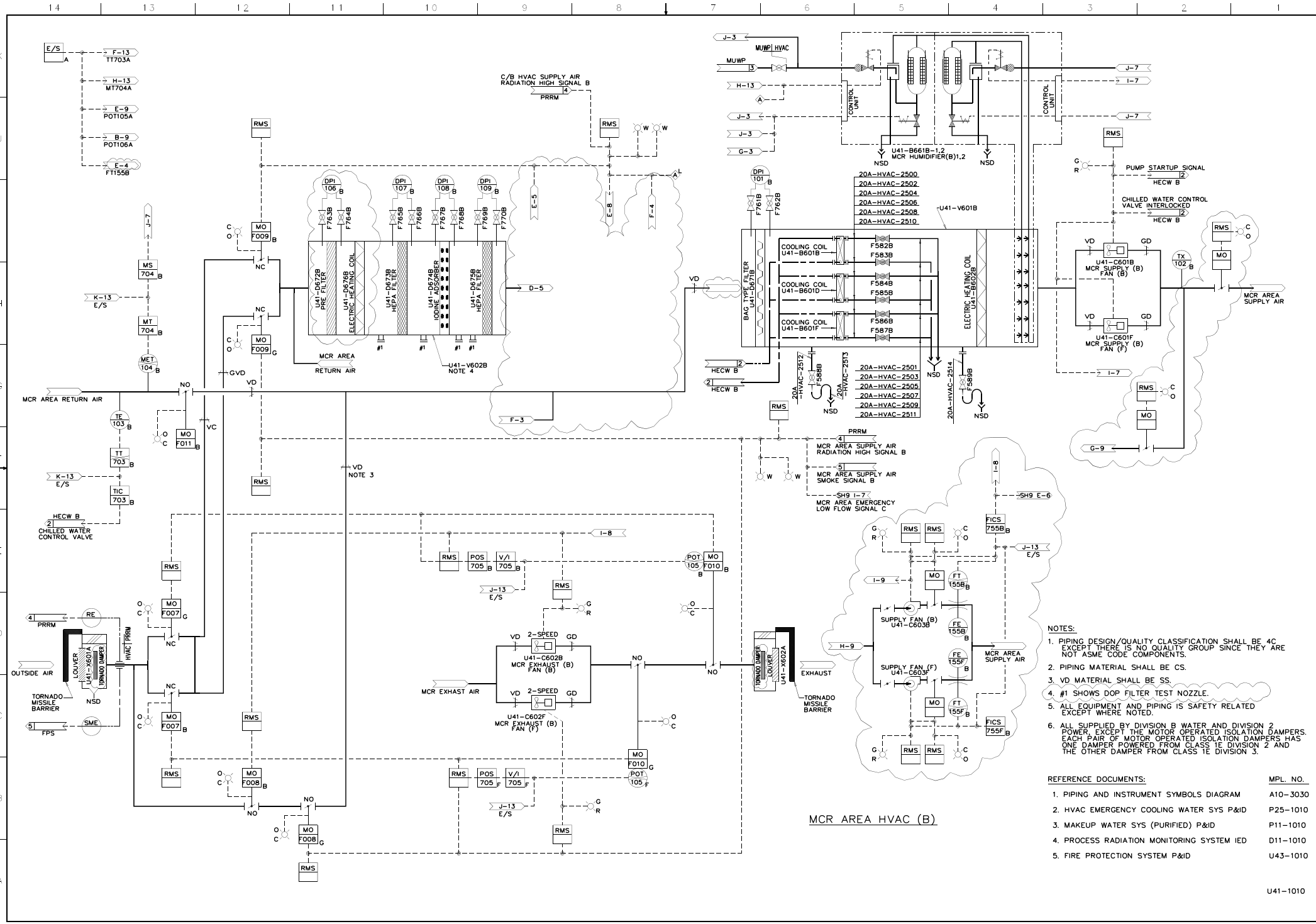

FIGURE 9.4-1 CONTROL BUILDING HVAC FLOW DIAGRAM (Sheet 1 of 5)

STP 3&4 Rev.2

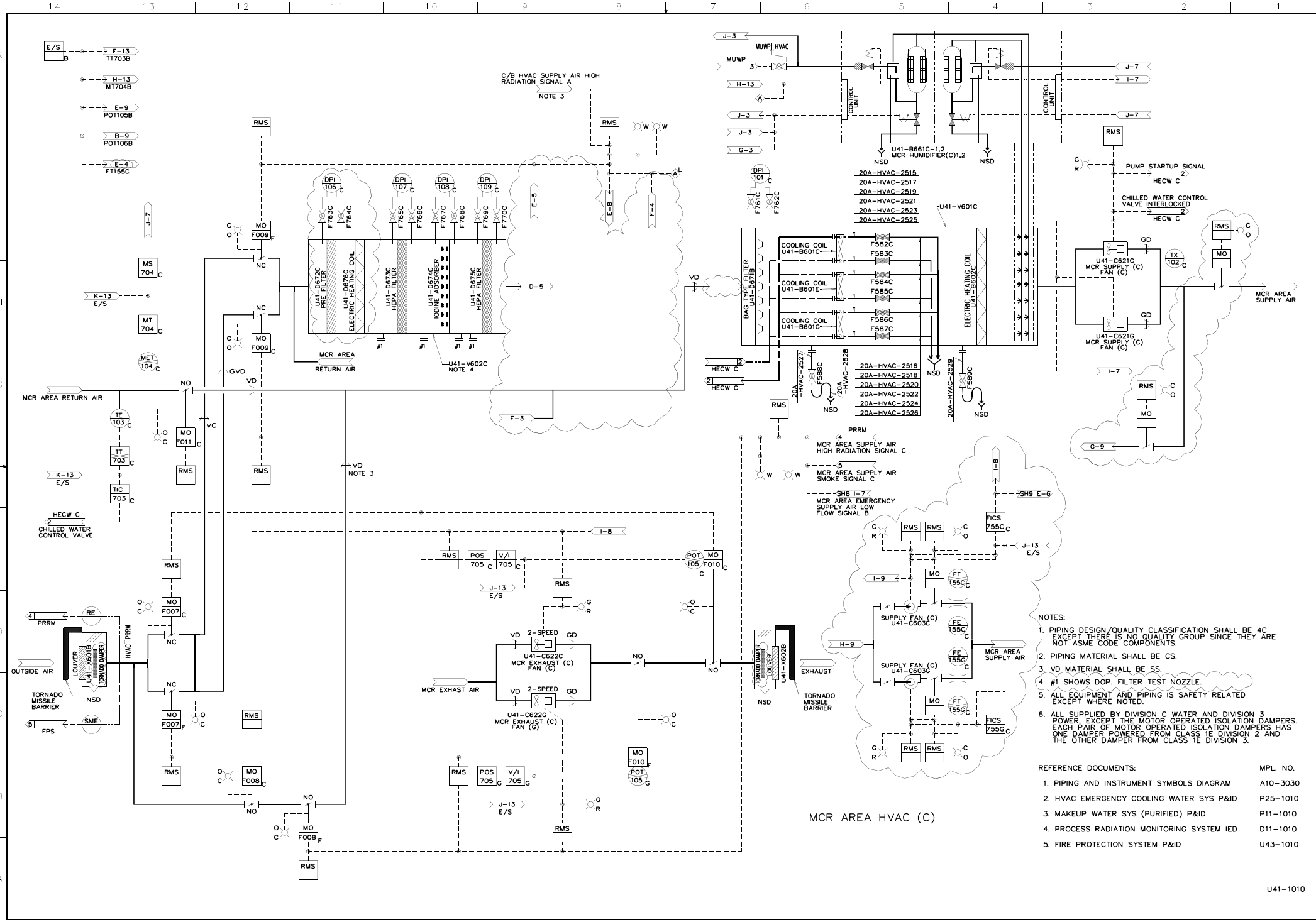

FIGURE 9.4-1 CONTROL BUILDING HVAC FLOW DIAGRAM (Sheet 2 of 5)

STP 3&4 Rev.2

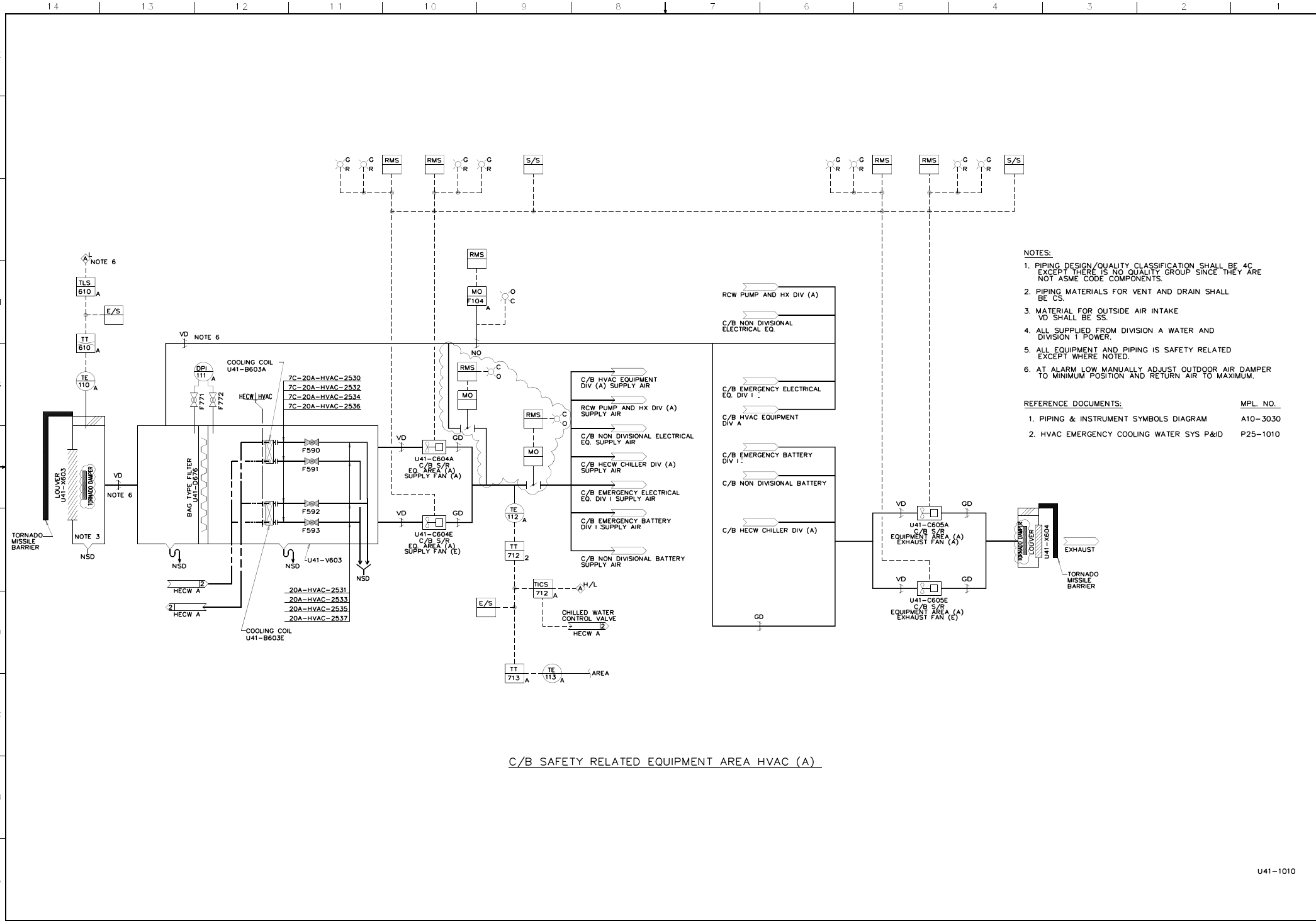

FIGURE 9.4-1 CONTROL BUILDING HVAC FLOW DIAGRAM (Sheet 3 of 5)

STP 3&4 Rev.2

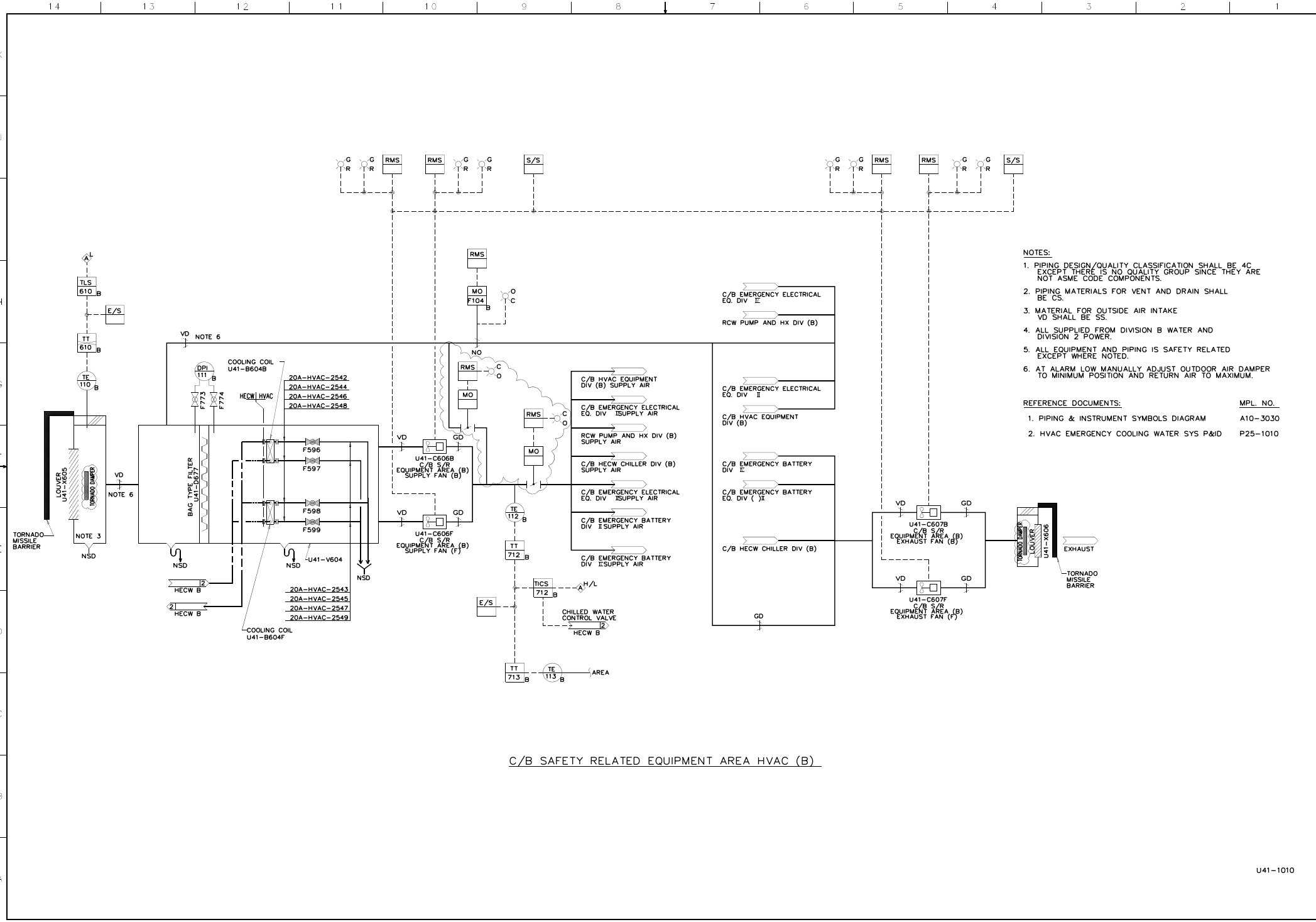

FIGURE 9.4-1 CONTROL BUILDING HVAC FLOW DIAGRAM (Sheet 4 of 5)

STP 3&4 Rev.2

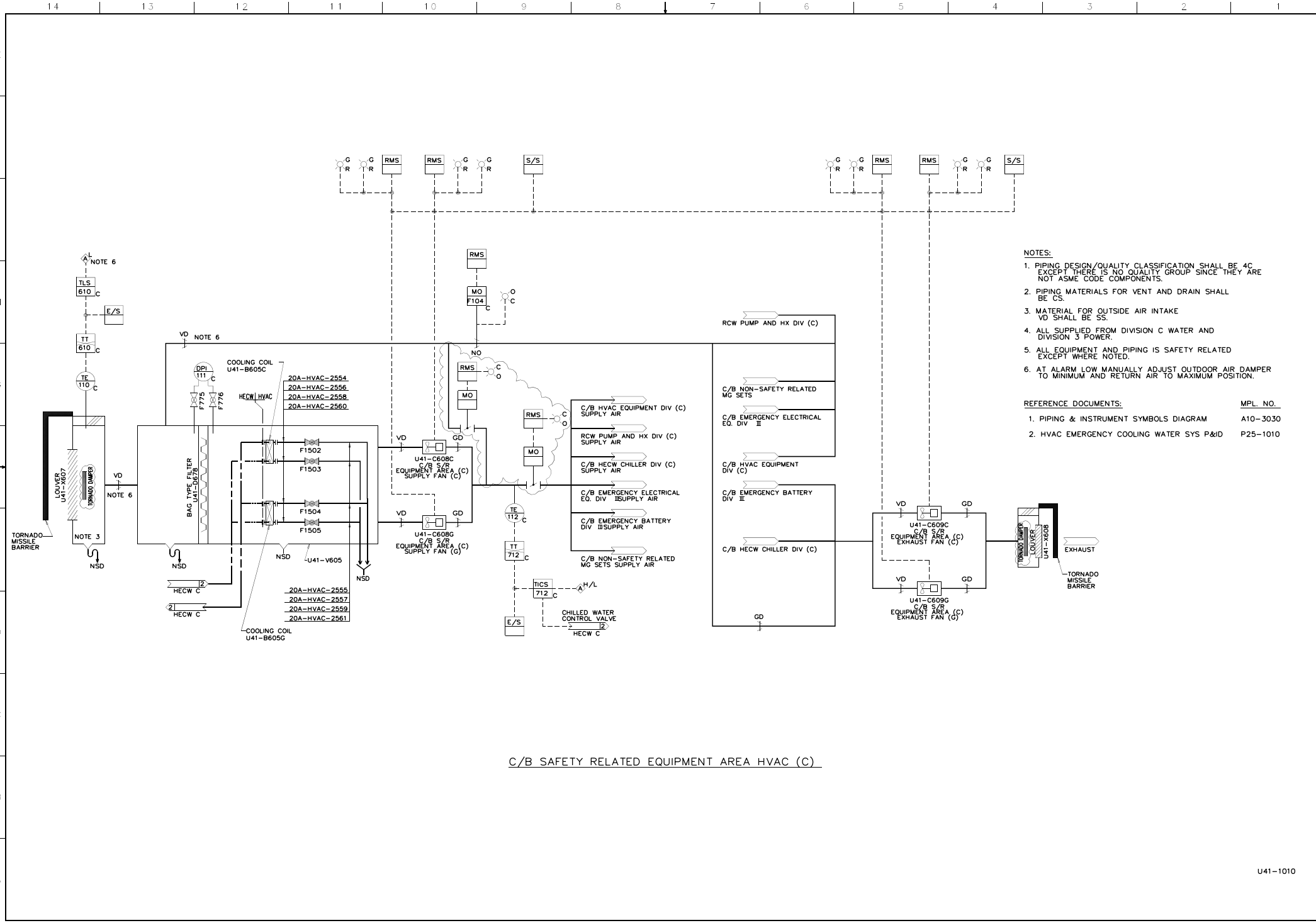

FIGURE 9.4-1 CONTROL BUILDING HVAC FLOW DIAGRAM (Sheet 5 of 5)

STP 3&4 Rev.2

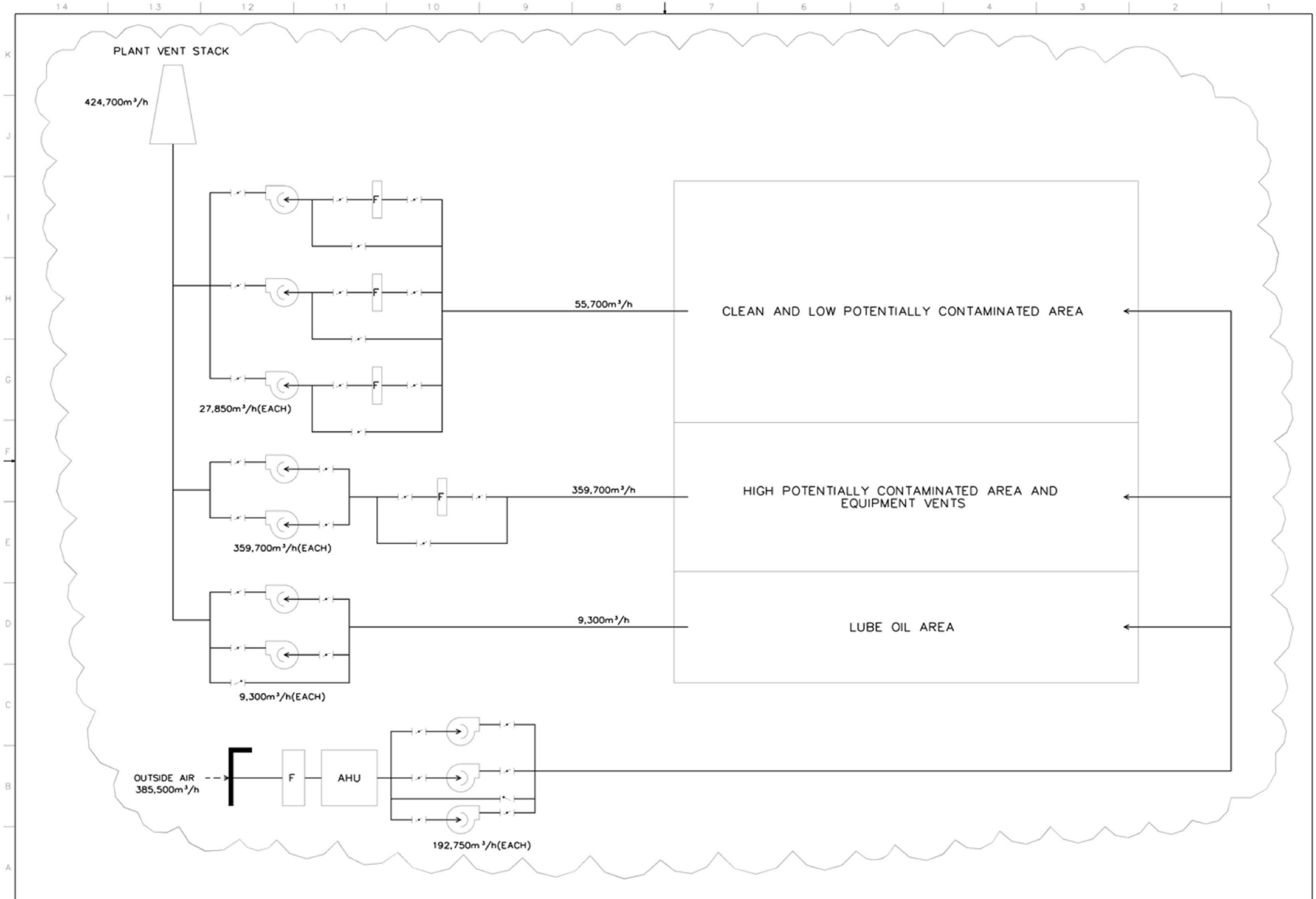

FIGURE 9.4-2a TURBINE BUILDING VENTILATION SYSTEM AIR FLOW DIAGRAM

STP 3&4 Rev.2

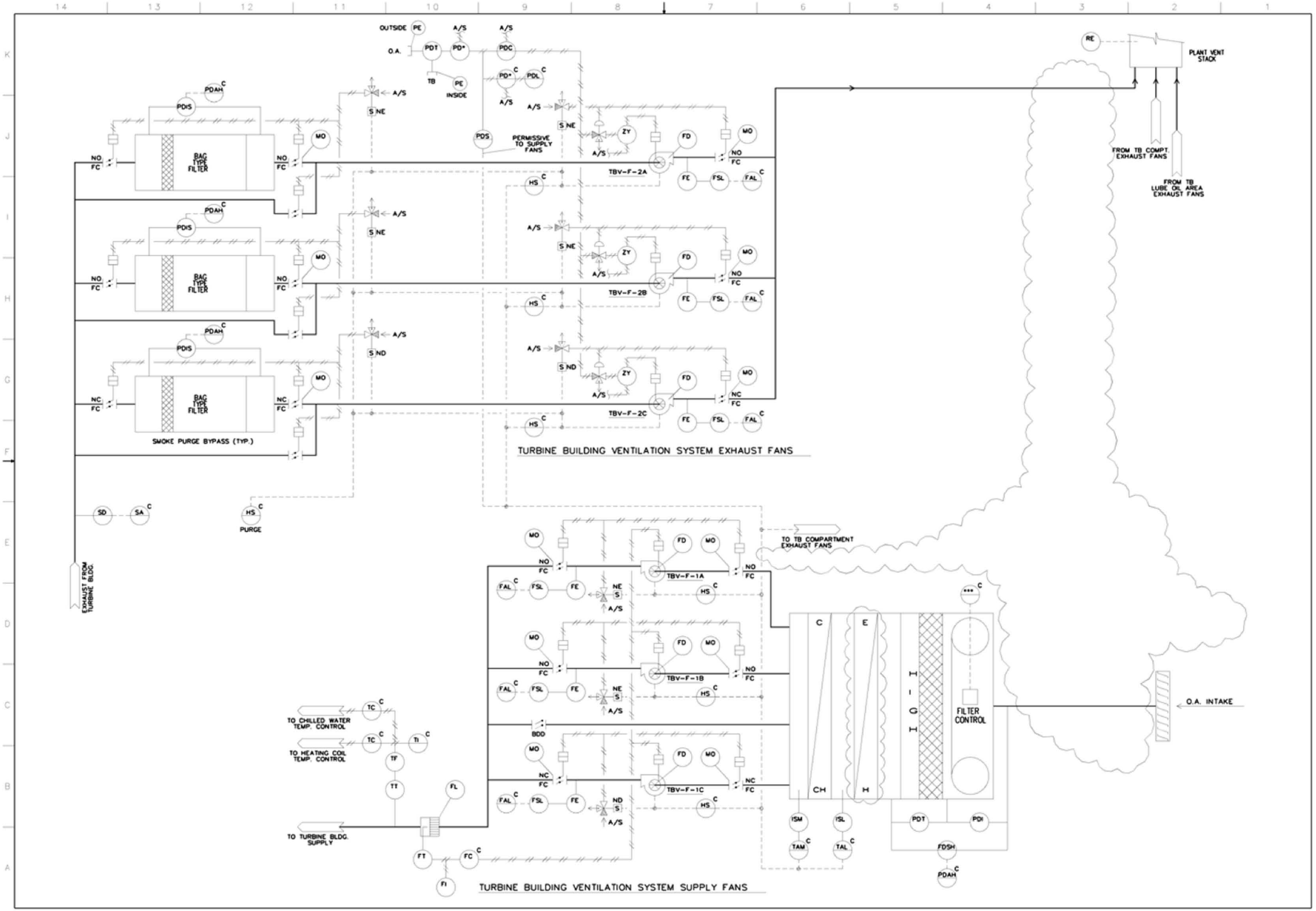

FIGURE 9.4-2b TURBINE BUILDING VENTILATION SYSTEM, CONTROL DIAGRAM, Sheet 1

STP 3&4 Rev.2

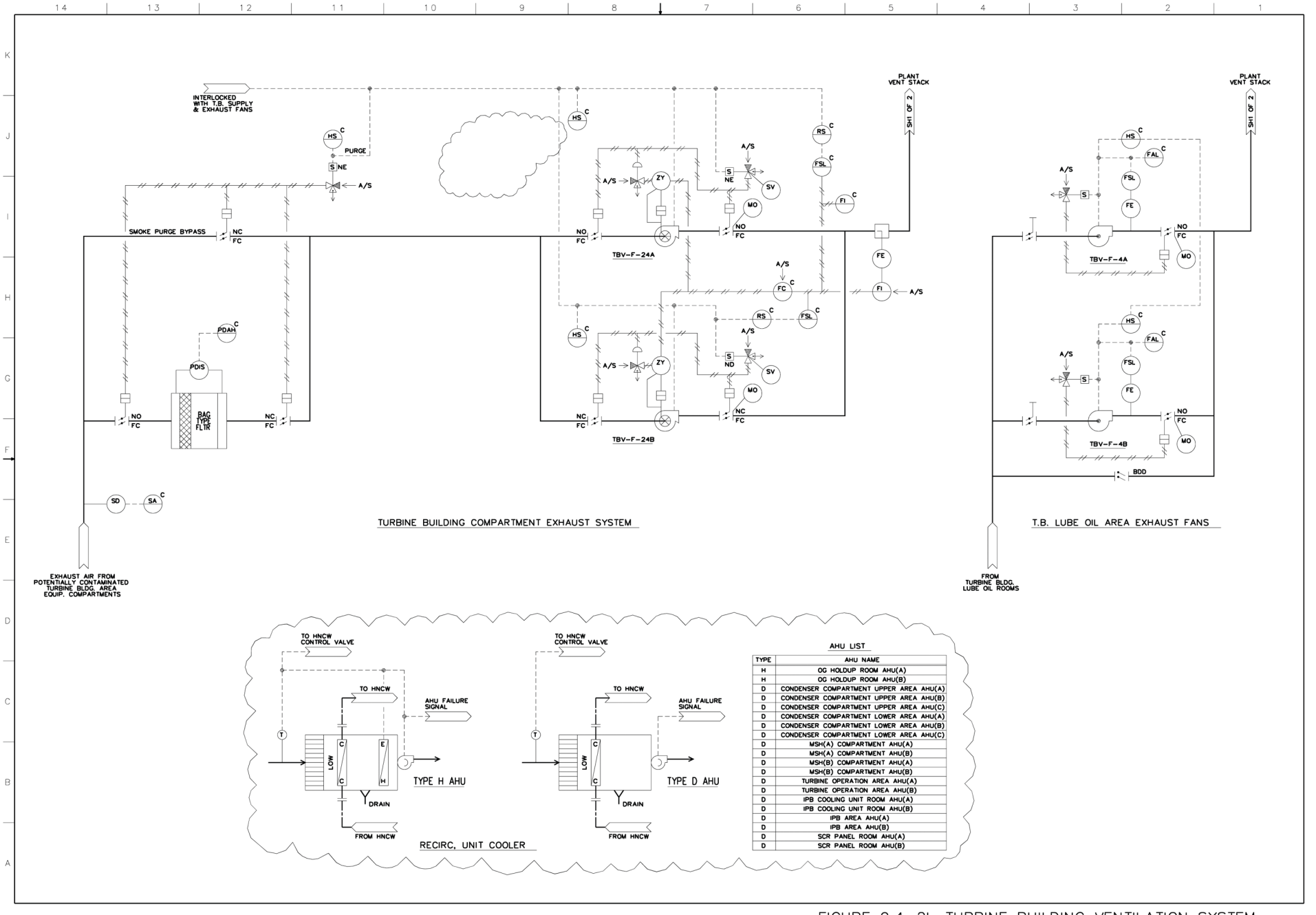

AHU LIST

TYPE	AHU NAME
H	OG HOLDUP ROOM AHU(A)
H	OG HOLDUP ROOM AHU(B)
D	CONDENSER COMPARTMENT UPPER AREA AHU(A)
D	CONDENSER COMPARTMENT UPPER AREA AHU(B)
D	CONDENSER COMPARTMENT UPPER AREA AHU(C)
D	CONDENSER COMPARTMENT LOWER AREA AHU(A)
D	CONDENSER COMPARTMENT LOWER AREA AHU(B)
D	CONDENSER COMPARTMENT LOWER AREA AHU(C)
D	MSH(A) COMPARTMENT AHU(A)
D	MSH(A) COMPARTMENT AHU(B)
D	MSH(B) COMPARTMENT AHU(A)
D	MSH(B) COMPARTMENT AHU(B)
D	TURBINE OPERATION AREA AHU(A)
D	TURBINE OPERATION AREA AHU(B)
D	IPB COOLING UNIT ROOM AHU(A)
D	IPB COOLING UNIT ROOM AHU(B)
D	IPB AREA AHU(A)
D	IPB AREA AHU(B)
D	SCR PANEL ROOM AHU(A)
D	SCR PANEL ROOM AHU(B)

FIGURE 9.4-2b TURBINE BUILDING VENTILATION SYSTEM, CONTROL DIAGRAM, Sheet 2

STP 3&4 Rev.2

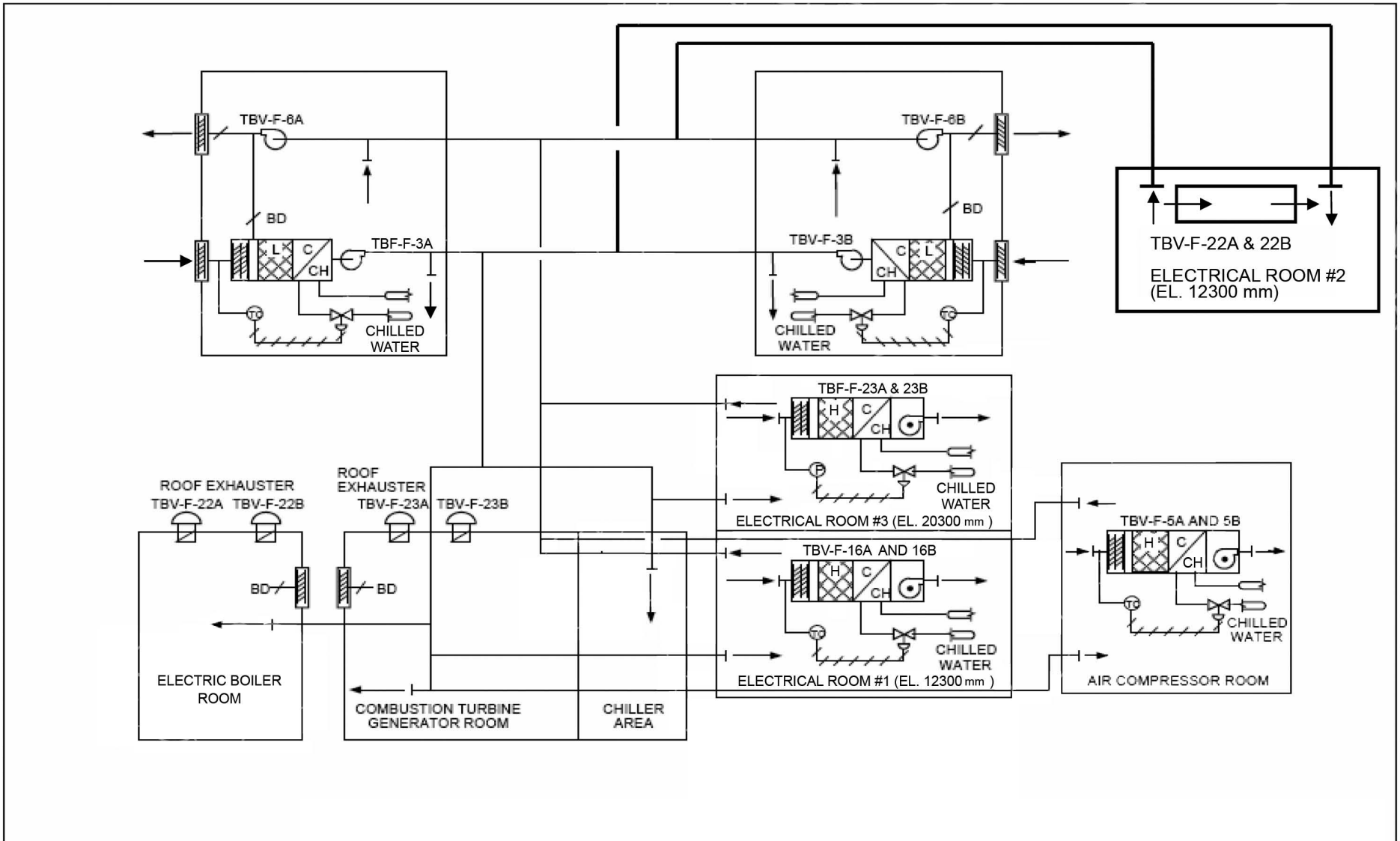

Figure 9.4-2c Electrical Building HVAC System Diagram
Turbine Building Electrical Equipment Areas (EEA) HVAC System Diagram

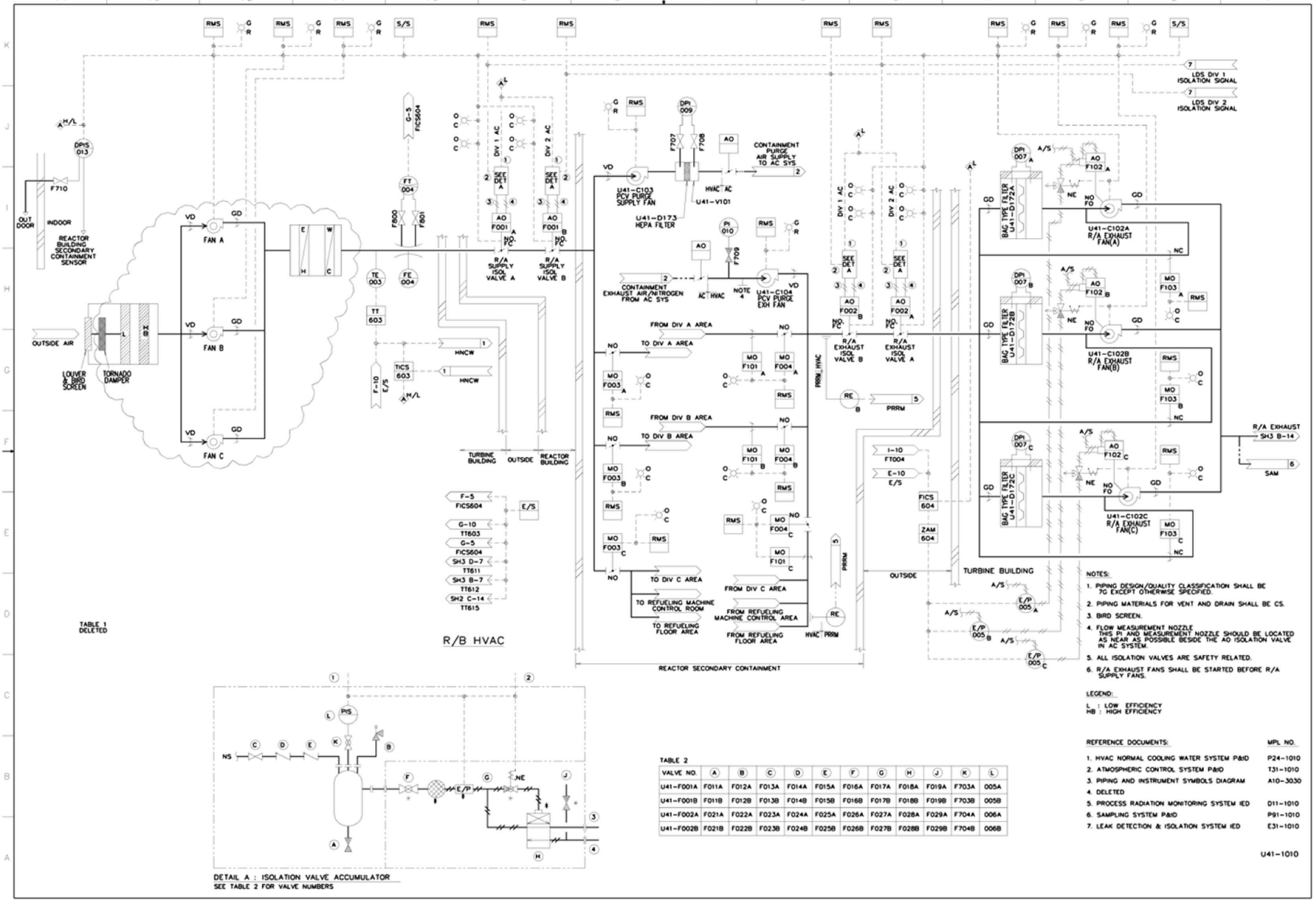

TABLE 2

VALVE NO.	A	B	C	D	E	F	G	H	J	K	L
U41-F001A	F011A	F012A	F013A	F014A	F015A	F016A	F017A	F018A	F019A	F703A	005A
U41-F001B	F011B	F012B	F013B	F014B	F015B	F016B	F017B	F018B	F019B	F703B	005B
U41-F002A	F021A	F022A	F023A	F024A	F025A	F026A	F027A	F028A	F029A	F704A	006A
U41-F002B	F021B	F022B	F023B	F024B	F025B	F026B	F027B	F028B	F029B	F704B	006B

FIGURE 9.4-3 SECONDARY CONTAINMENT HVAC SYSTEM P&ID (Sheet 1 of 3)

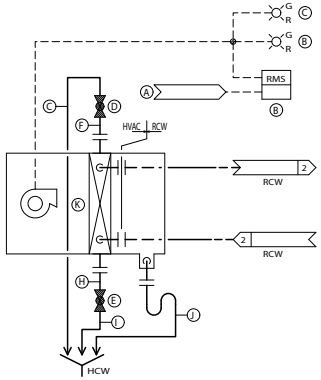

R/A ESSENTIAL HVH TYPE C

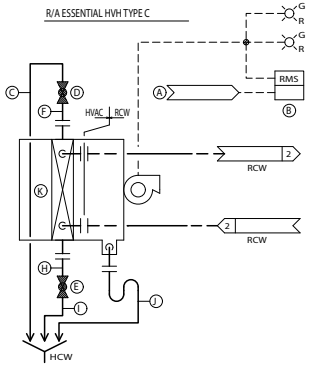

R/A ESSENTIAL HVH TYPE D

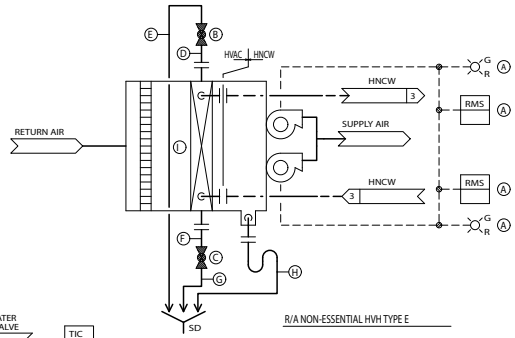

R/A NON-ESSENTIAL HVH TYPE E

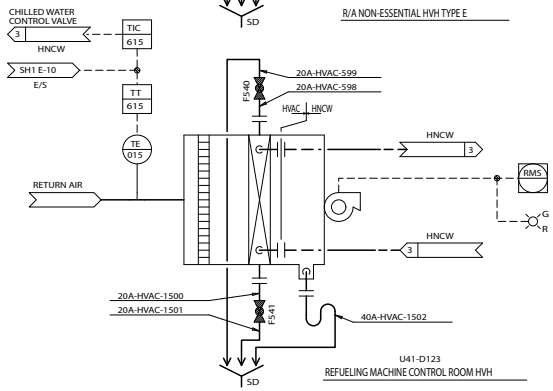

U41-D123
REFUELING MACHINE CONTROL ROOM HVH

TABLE 3 : ESSENTIAL HVH

TYPE	EQ. NO.	HVH NAME	HVH INITIATION SIGNAL (A)	PANEL NO. (B)	PANEL NO. (C)	VALVE NO. (D)	VALVE NO. (E)	PIPING SIZE & NO. (F)	PIPING SIZE & NO. (G)	PIPING SIZE & NO. (H)	PIPING SIZE & NO. (I)	PIPING SIZE & NO. (J)	COOLING COIL (K)
D	U41-D101	RCIC PUMP ROOM HVH	RCIC PUMP START SIGNAL			F504	F505	20A-HVAC -508	20A-HVAC -509	20A-HVAC -510	20A-HVAC -511	40A-HVAC -512	B101
D	U41-D102	HPCF PUMP (C) ROOM HVH	HPCF PUMP (C) START SIGNAL			F506	F507	-513	-514	-515	-516	-517	B102
D	U41-D103	RHR PUMP (A) ROOM HVH	RHR PUMP (A) START SIGNAL			F508	F509	-518	-519	-520	-521	-522	B103
D	U41-D104	RHR PUMP (C) ROOM HVH	RHR PUMP (C) START SIGNAL			F510	F511	-523	-524	-525	-526	-527	B104
D	U41-D105	RHR PUMP (B) ROOM HVH	RHR PUMP (B) START SIGNAL			F512	F513	-528	-529	-530	-531	-532	B105
D	U41-D106	HPCF PUMP (B) ROOM HVH	HPCF PUMP (B) START SIGNAL			F514	F515	-533	-534	-535	-536	-537	B106
D	U41-D111	SGTS ROOM HVH (C)	SECONDARY CONTAINMENT ISOLATION SIGNAL			F524	F525	-558	-559	-560	-561	-562	B111
D	U41-D112	SGTS ROOM HVH (B)	SECONDARY CONTAINMENT ISOLATION SIGNAL			F526	F527	-563	-564	-565	-566	-567	B112
C	U41-D113	CAMS (A) ROOM HVH	SECONDARY CONTAINMENT ISOLATION SIGNAL			F528	F529	-568	-569	-570	-571	-572	B113
C	U41-D114	CAMS (B) ROOM HVH	SECONDARY CONTAINMENT ISOLATION SIGNAL			F530	F531	-573	-574	-575	-576	-577	B114

TABLE 4 : NON-ESSENTIAL AIR HANDLING UNIT (NON-SAFETY RELATED)

TYPE	EQ. NO.	HVH NAME	PANEL NO. (A)	VALVE NO. (B)	VALVE NO. (C)	PIPING SIZE & NO. (D)	PIPING SIZE & NO. (E)	PIPING SIZE & NO. (F)	PIPING SIZE & NO. (G)	PIPING SIZE & NO. (H)	COOLING COIL (I)
E	U41-D121A	R/A MS TUNNEL HVH (A) NOTE 3		F536	F537	20A-HVAC -588	20A-HVAC -589	20A-HVAC -590	20A-HVAC -591	40A-HVAC -592	B121A
E	U41-D121B	R/A MS TUNNEL HVH (B) NOTE 3		F538	F539	20A-HVAC -593	20A-HVAC -594	20A-HVAC -595	20A-HVAC -596	40A-HVAC -597	B121B
E	U41-D115	R/A SPCU PUMP ROOM		F	F	20A-HVAC -1503	20A-HVAC -1504	20A-HVAC -1505	20A-HVAC -1506	40A-HVAC -1507	B115
-	U41-D123	R/A REFUELING MACHINE CONTROL ROOM HVH		F	F	20A-HVAC -598	20A-HVAC -599	20A-HVAC -1500	20A-HVAC -1501	40A-HVAC -1502	B123
D	U41-D109	FPC PUMP (A) ROOM HVH		F520	F521	-548	-549	-550	-551	-552	B109
D	U41-D110	FPC PUMP (B) ROOM HVH		F522	F523	-553	-554	-555	-556	-557	B110

NOTES:

1. PIPING MATERIALS FOR VENT AND DRAIN SHALL BE CS.
2. PIPING DESIGN/QUALITY CLASSIFICATION SHALL BE 7G EXCEPT OTHERWISE SPECIFIED.
3. THESE HVH'S CAN BE COMBINED INTO A COMMON COIL.
4. THESE UNITS ARE IN CONTROL BUILDING.

REFERENCE DOCUMENTS: MPL NO.

1. PIPING AND INSTRUMENT SYMBOLS DIAGRAM A10-3030
2. REACTOR BLDG COOLING WATER SYS P&ID P21-1010
3. HVAC NORMAL COOLING WATER SYS P&ID P24-1010

TABLE 5 : NON-ESSENTIAL AIR HANDLING UNIT (NON-SAFETY RELATED)

TYPE	EQ. NO.	HVH NAME	PIPE SIZE & NO. (B)	COOLING COIL (C)
MV504	U41-D131A	CRD CONTROL ROOM	20A-HVAC -1514	B131A
MV504	U41-D133A	NON-DIVISIONAL ELECTRICAL EQUIPMENT ZONE NOTE 4	20A-HVAC -1519	B133
MV504	U41-D134A	ISI ROOM	20A-HVAC -1512	B134A

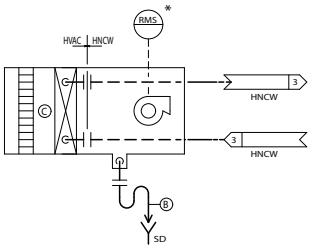

R/A NON-ESSENTIAL UNIT TYPE MV504

R/B AND C/B HVAC

U41-1010

FIGURE 9.4-3 SECONDARY CONTAINMENT HVAC SYSTEM (Sheet 2 of 3)

STP 3&4 Rev.2

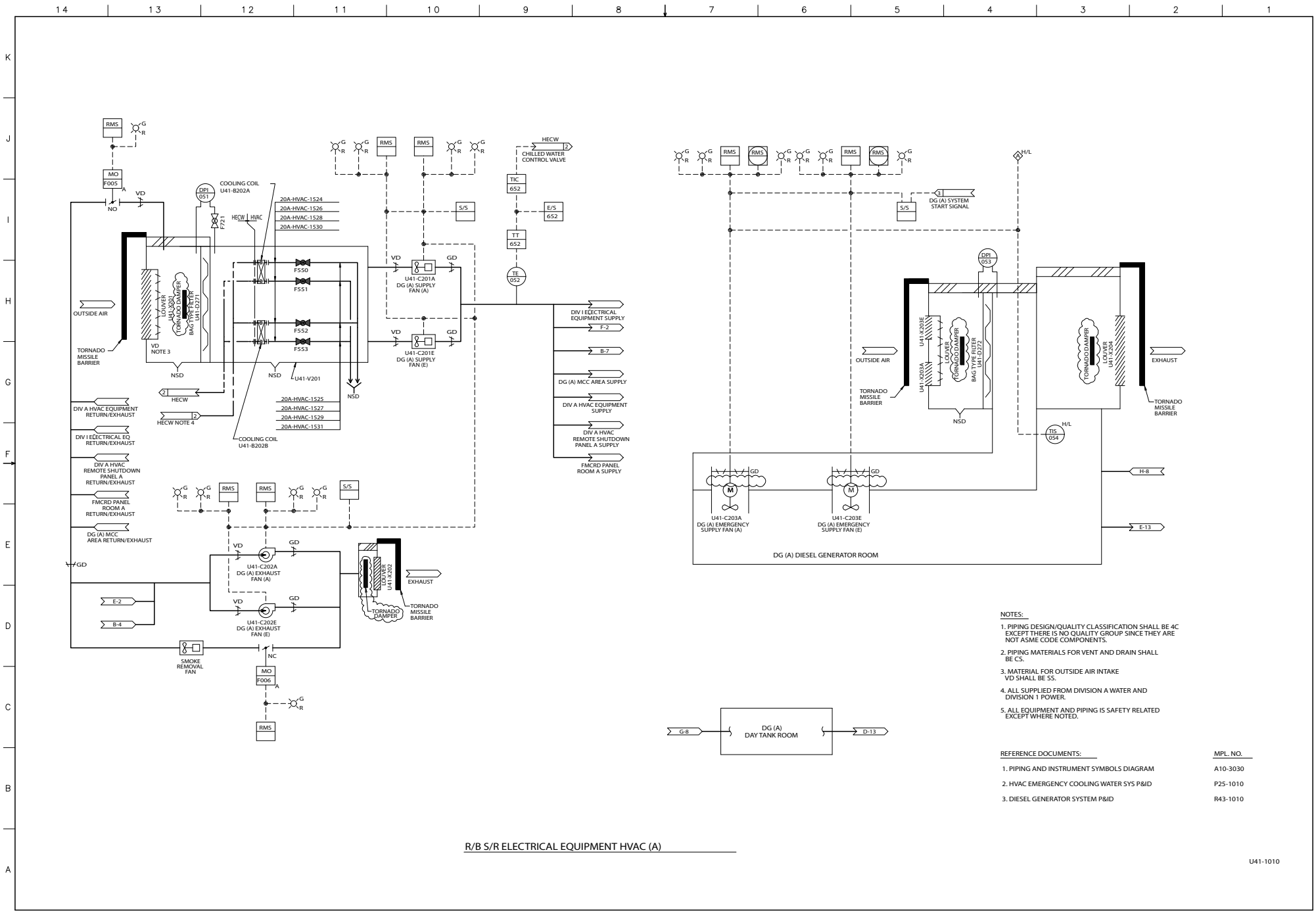

NOTES:

1. PIPING DESIGN/QUALITY CLASSIFICATION SHALL BE 4C EXCEPT THERE IS NO QUALITY GROUP SINCE THEY ARE NOT ASME CODE COMPONENTS.
2. PIPING MATERIALS FOR VENT AND DRAIN SHALL BE CS.
3. MATERIAL FOR OUTSIDE AIR INTAKE VD SHALL BE SS.
4. ALL SUPPLIED FROM DIVISION A WATER AND DIVISION 1 POWER.
5. ALL EQUIPMENT AND PIPING IS SAFETY RELATED EXCEPT WHERE NOTED.

REFERENCE DOCUMENTS:	MPL. NO.
1. PIPING AND INSTRUMENT SYMBOLS DIAGRAM	A10-3030
2. HVAC EMERGENCY COOLING WATER SYS P&ID	P25-1010
3. DIESEL GENERATOR SYSTEM P&ID	R43-1010

R/B S/R ELECTRICAL EQUIPMENT HVAC (A)

U41-1010

FIGURE 9.4-4 R/B SAFETY-RELATED ELECTRICAL EQUIPMENT HVAC SYSTEM (Sheet 1 of 3)

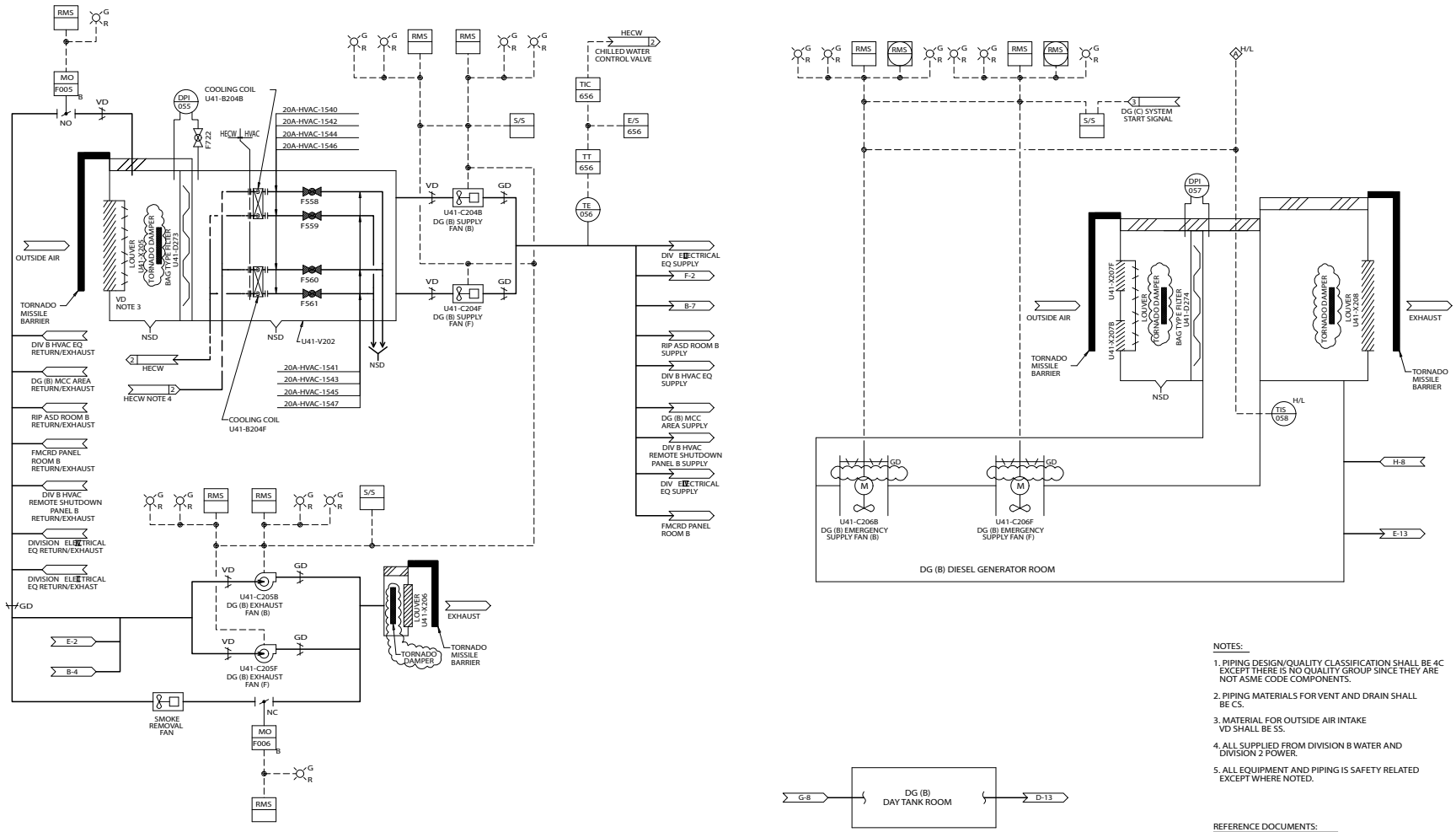

NOTES:

1. PIPING DESIGN/QUALITY CLASSIFICATION SHALL BE 4C EXCEPT THERE IS NO QUALITY GROUP SINCE THEY ARE NOT ASME CODE COMPONENTS.
2. PIPING MATERIALS FOR VENT AND DRAIN SHALL BE CS.
3. MATERIAL FOR OUTSIDE AIR INTAKE VD SHALL BE SS.
4. ALL SUPPLIED FROM DIVISION B WATER AND DIVISION 2 POWER.
5. ALL EQUIPMENT AND PIPING IS SAFETY RELATED EXCEPT WHERE NOTED.

REFERENCE DOCUMENTS:	MPL. NO.
1. PIPING AND INSTRUMENT SYMBOLS DIAGRAM	A10-3030
2. HVAC EMERGENCY COOLING WATER SYS P&ID	P25-1010
3. DIESEL GENERATOR SYSTEM P&ID	R43-1010

R/B S/R ELECTRICAL EQUIPMENT HVAC (B)

U41-1010

FIGURE 9.4-4 R/B SAFETY-RELATED ELECTRICAL EQUIPMENT HVAC SYSTEM (Sheet 2 of 3)

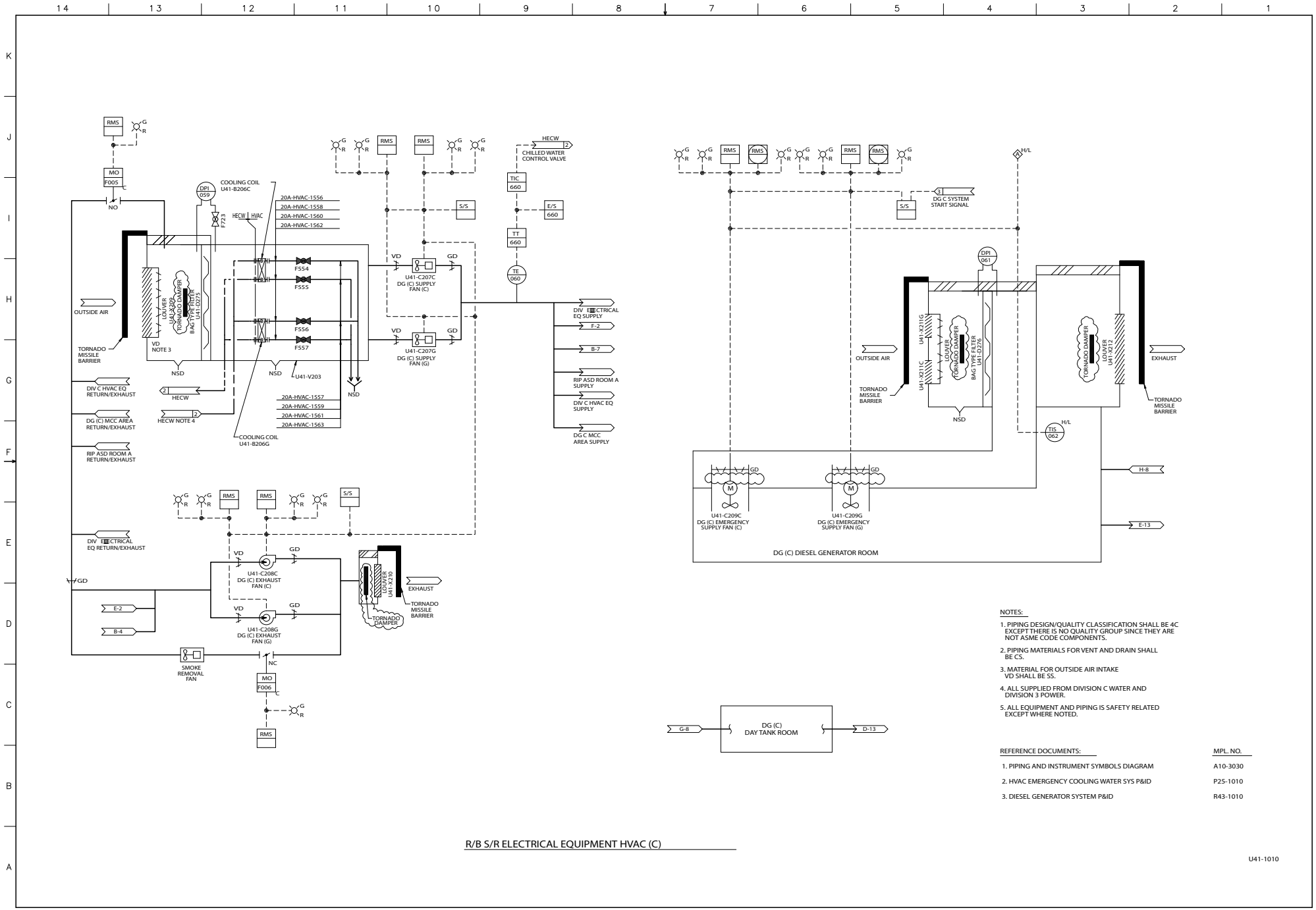

NOTES:

1. PIPING DESIGN/QUALITY CLASSIFICATION SHALL BE 4C EXCEPT THERE IS NO QUALITY GROUP SINCE THEY ARE NOT ASME CODE COMPONENTS.
2. PIPING MATERIALS FOR VENT AND DRAIN SHALL BE CS.
3. MATERIAL FOR OUTSIDE AIR INTAKE VD SHALL BE SS.
4. ALL SUPPLIED FROM DIVISION C WATER AND DIVISION 3 POWER.
5. ALL EQUIPMENT AND PIPING IS SAFETY RELATED EXCEPT WHERE NOTED.

REFERENCE DOCUMENTS:	MPL. NO.
1. PIPING AND INSTRUMENT SYMBOLS DIAGRAM	A10-3030
2. HVAC EMERGENCY COOLING WATER SYS P&ID	P25-1010
3. DIESEL GENERATOR SYSTEM P&ID	R43-1010

FIGURE 9.4-4 R/B SAFETY-RELATED ELECTRICAL EQUIPMENT HVAC SYSTEM (Sheet 3 of 3)

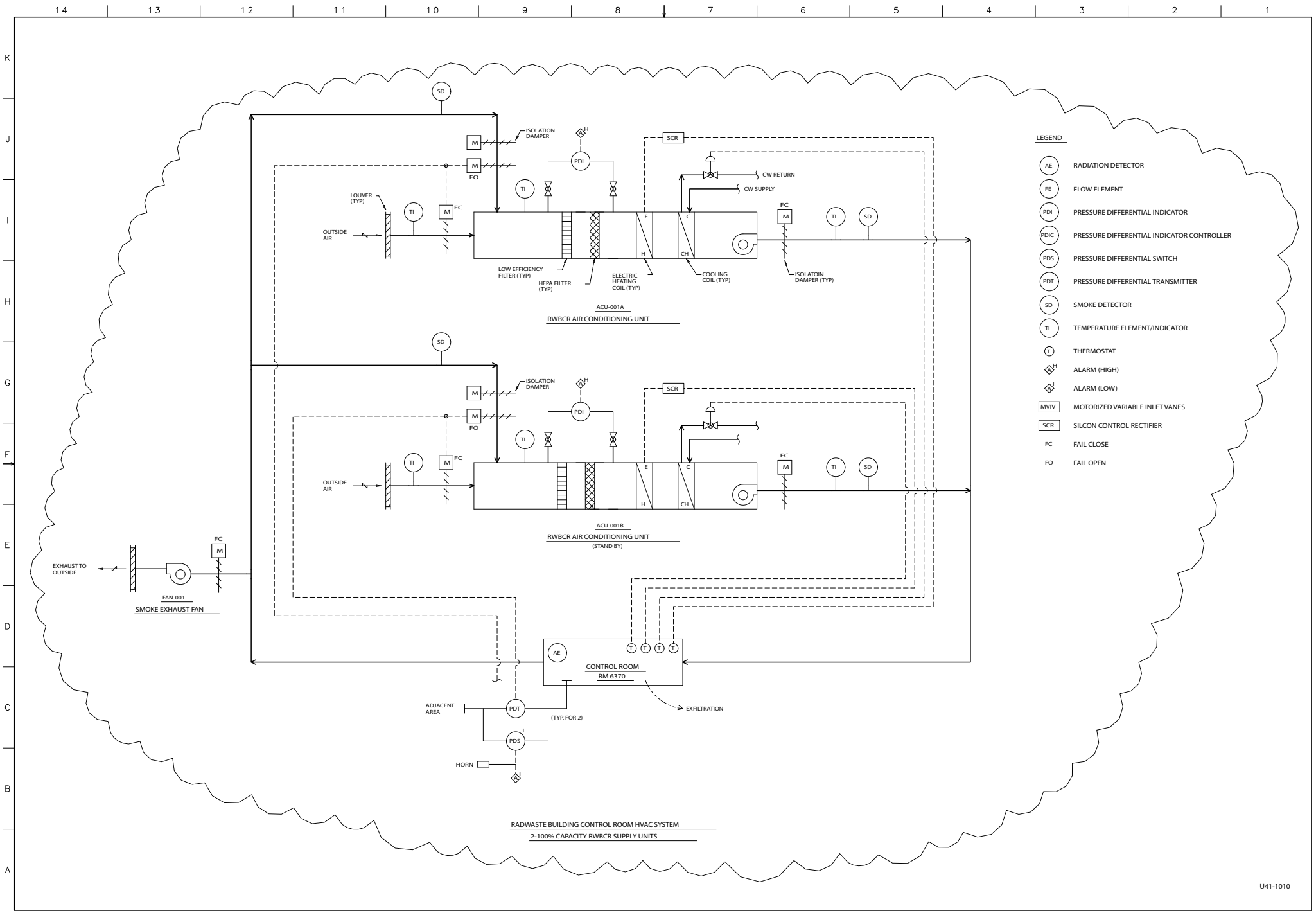

FIGURE 9.4-10 RADWASTE BUILDING HVAC P&ID (Sheet 1 of 3)

STP 3&4 Rev.2

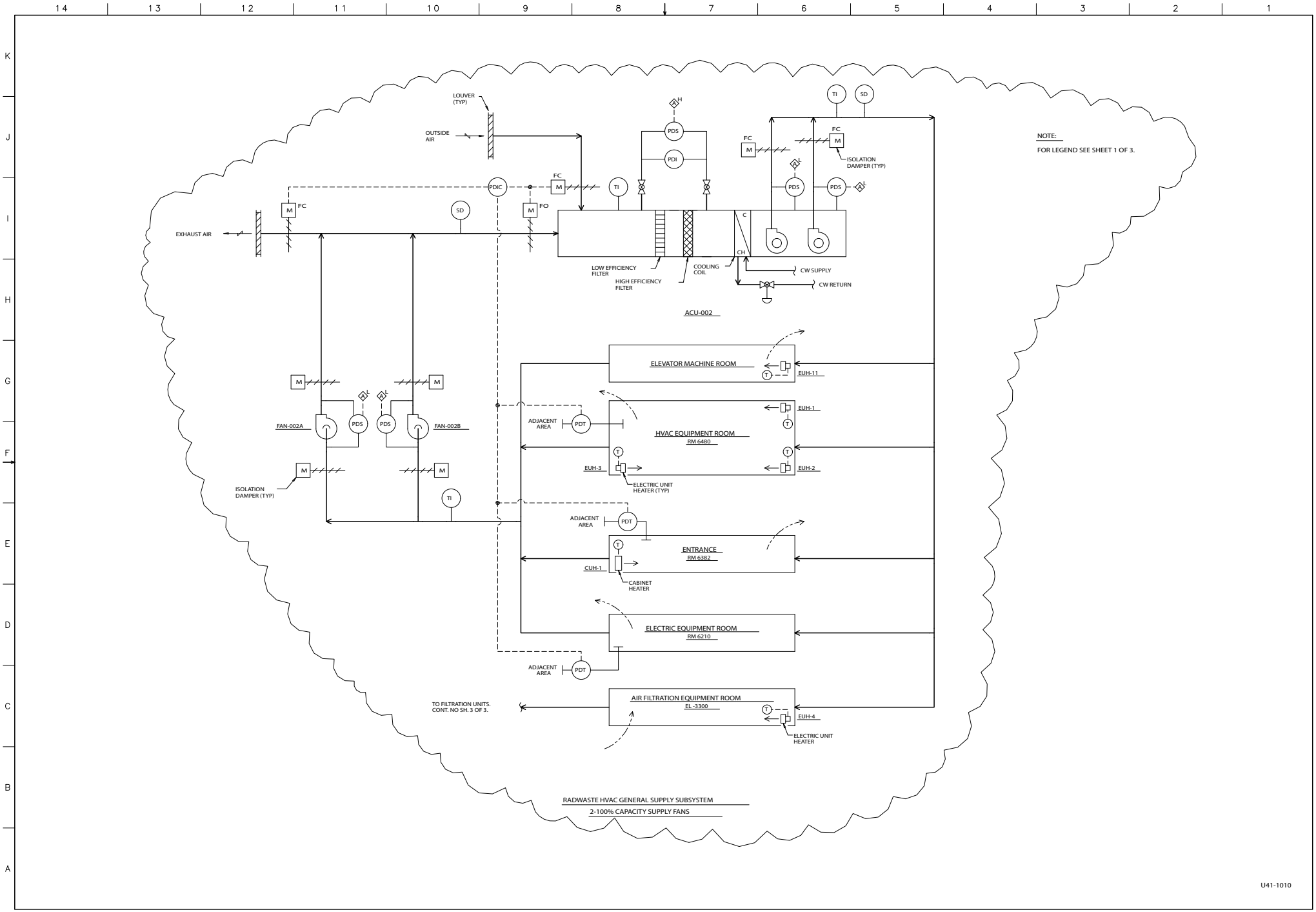

FIGURE 9.4-10 RADWASTE BUILDING HVAC P&ID (Sheet 2 of 3)

STP 3&4 Rev.2

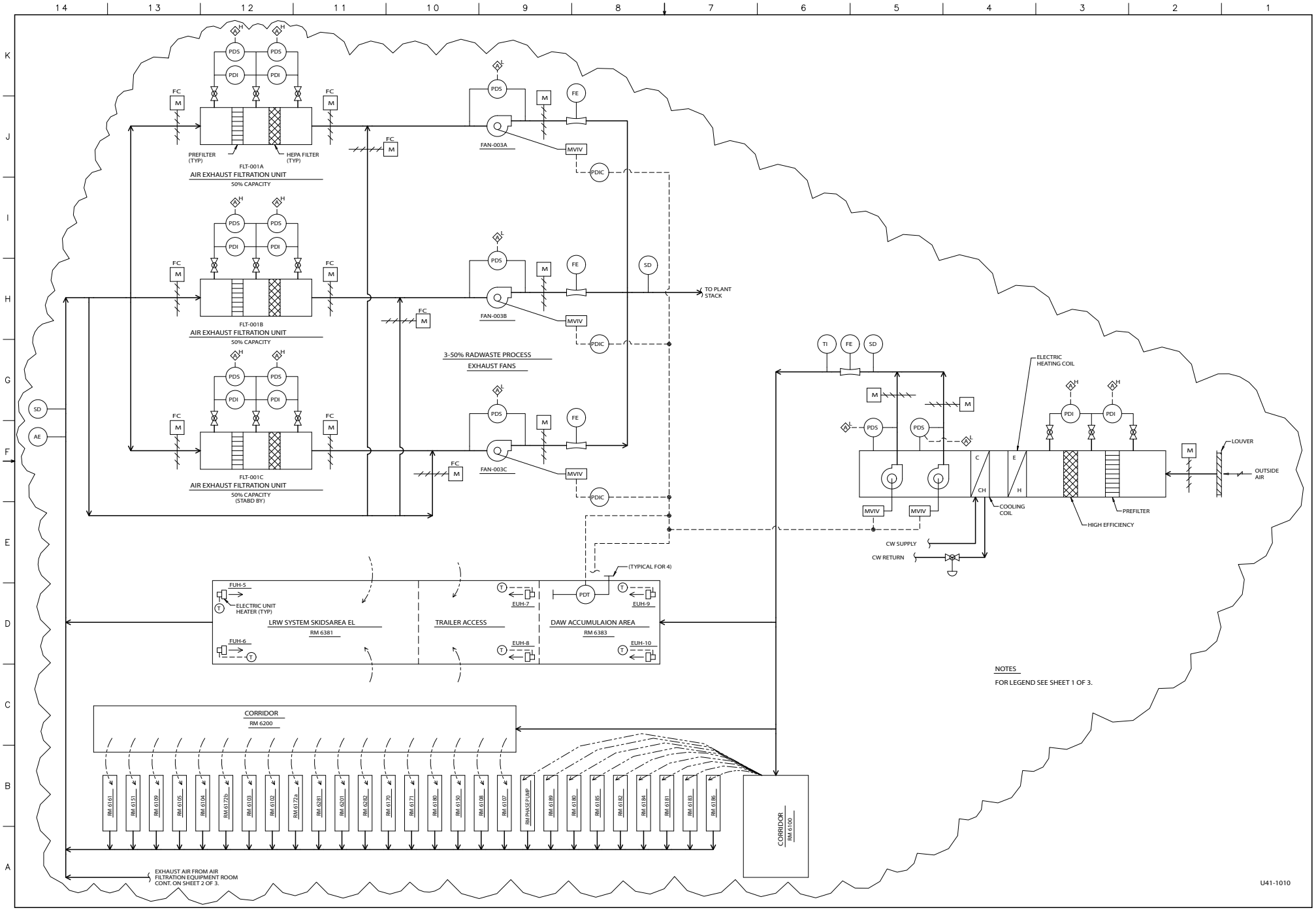

FIGURE 9.4-10 RADWASTE BUILDING HVAC P&ID (Sheet 3 of 3)

STP 3&4 Rev.2

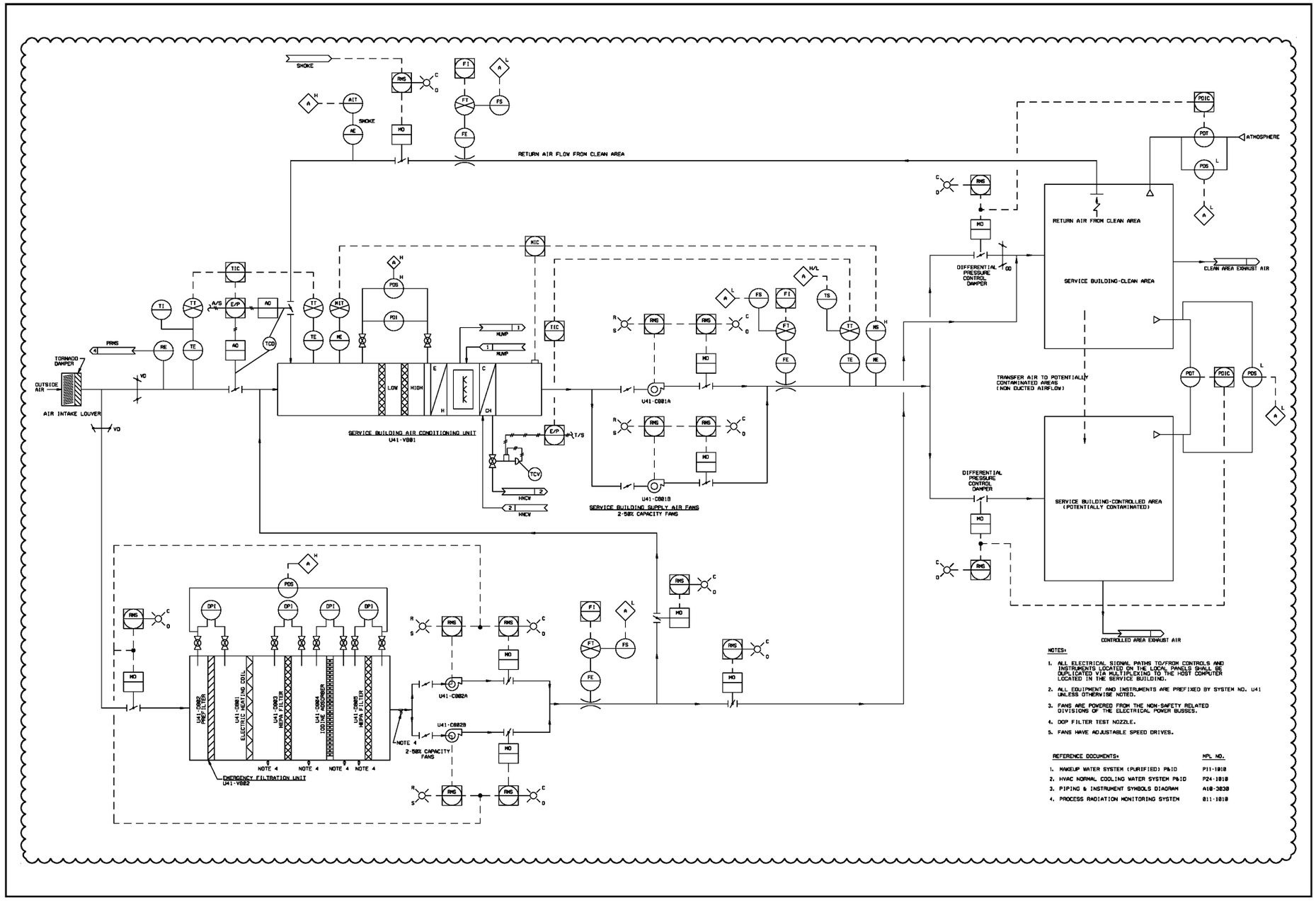

NOTES:

1. ALL ELECTRICAL SIGNAL PATHS TO/FROM CONTROLS AND INSTRUMENTS LOCATED ON THE LOCAL PANELS SHALL BE DUPLICATED VIA MULTIPLEXING TO THE HOST COMPUTER LOCATED IN THE SERVICE BUILDING.
2. ALL EQUIPMENT AND INSTRUMENTS ARE PREFIXED BY SYSTEM NO. U41 UNLESS OTHERWISE NOTED.
3. FANS ARE POWERED FROM THE NON-SAFETY RELATED DIVISIONS OF THE ELECTRICAL POWER BUSSES.
4. DOP FILTER TEST NOZZLE.
5. FANS HAVE ADJUSTABLE SPEED DRIVES.

REFERENCE DOCUMENTS:	MPL NO.
1. MAKEUP WATER SYSTEM (PURIFIED) P&ID	P11-1010
2. HVAC NORMAL COOLING WATER SYSTEM P&ID	P24-1010
3. PIPING & INSTRUMENT SYMBOLS DIAGRAM	A10-3030
4. PROCESS RADIATION MONITORING SYSTEM	B11-1010

FIGURE 9.4-11 SERVICE BUILDING HVAC P&ID (SHEET 1 OF 2)

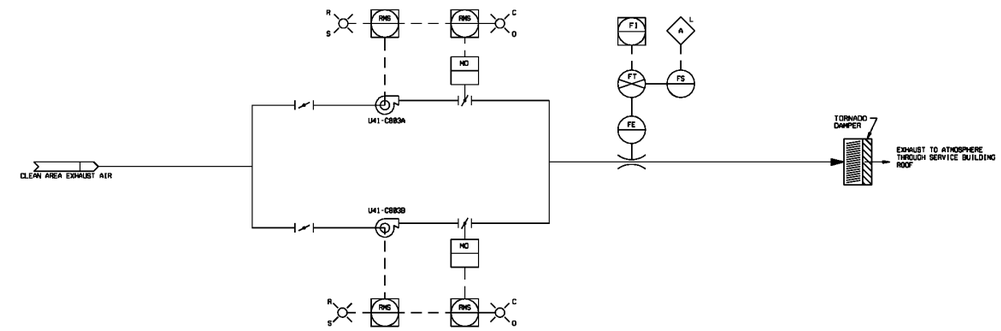

SERVICE BUILDING CLEAN AREA EXHAUST FAN
2- 50% CAPACITY FANS

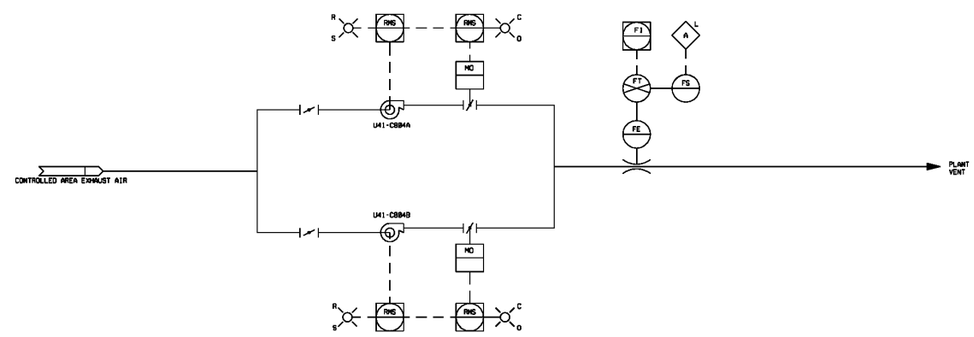

SERVICE BUILDING CONTROLLED AREA EXHAUST FAN
2- 50% CAPACITY FANS

NOTES:

1. ALL ELECTRICAL SIGNAL PATHS TO/FROM CONTROLS AND INSTRUMENTS LOCATED ON THE LOCAL PANELS SHALL BE DUPLICATED VIA MULTIPLEXING TO THE HOST COMPUTER LOCATED IN THE SERVICE BUILDING.
2. ALL EQUIPMENT AND INSTRUMENTS ARE PREFIXED BY SYSTEM NO. U41 UNLESS OTHERWISE NOTED.
3. FANS ARE POWERED FROM THE NON-SAFETY RELATED DIVISIONS OF THE ELECTRICAL POWER BUSSES.
4. FANS HAVE ADJUSTABLE SPEED DRIVES.

REFERENCE DOCUMENTS:	MPL NO.
1. PIPING & INSTRUMENT SYMBOLS DIAGRAM	A18-3038

FIGURE 9.4-11 SERVICE BUILDING HVAC P&ID (SHEET 2 OF 2)

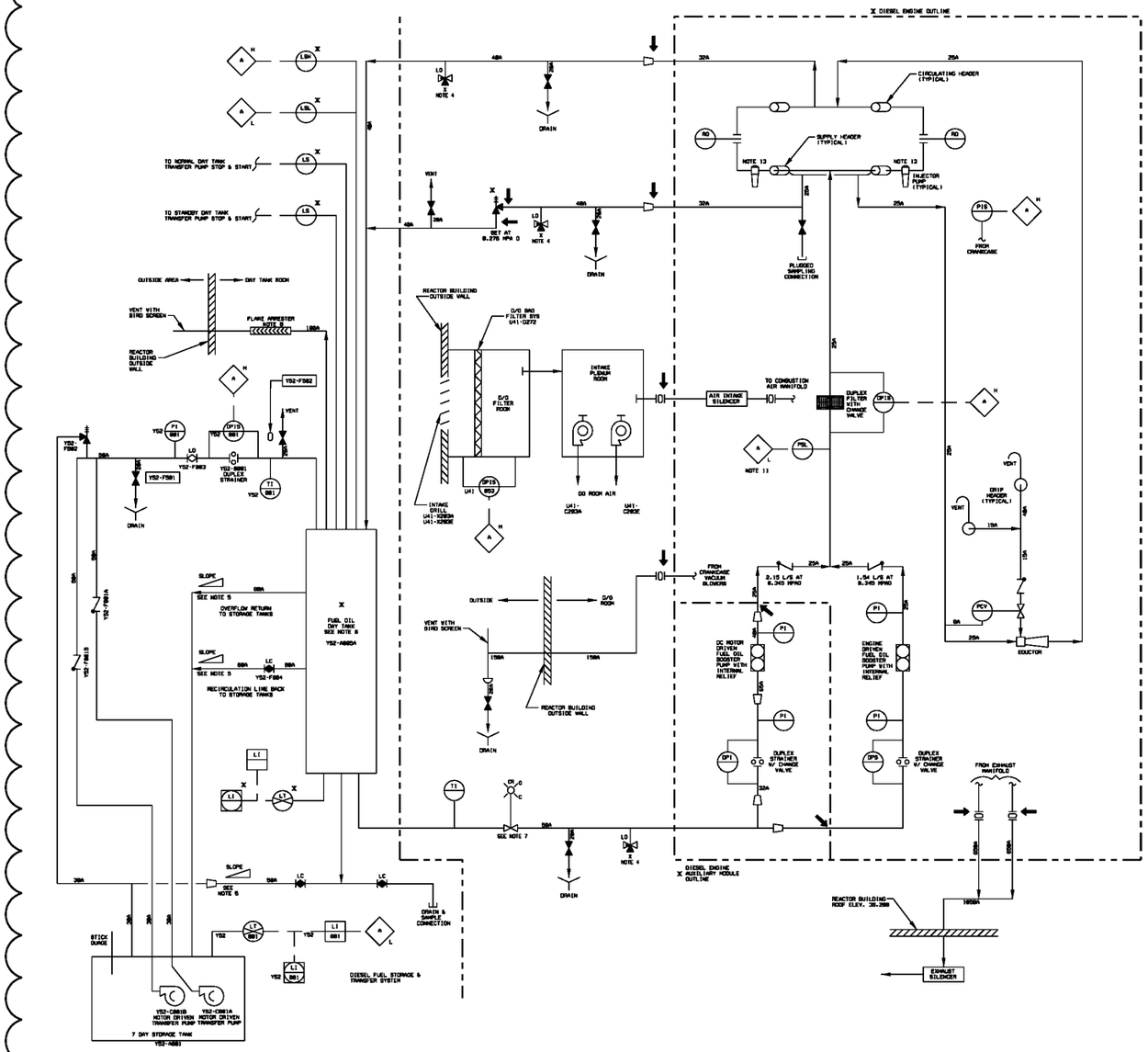

NOTES:

1. EQUIPMENT WITHIN DIESEL ENGINE AND DIESEL ENGINE AUXILIARY MODULE OUTLINES ARE FURNISHED ON ENGINE OR MODULE BY SELLER, AND MAY VARY DEPENDING ON UNIQUE DESIGN.
2. ALL VALVES AND INSTRUMENTS ARE PREFIXED BY SYSTEM NUMBER R43 UNLESS OTHERWISE INDICATED.
3. ALARMS ARE LOCATED IN LOCAL DIESEL GENERATOR PANEL WITH GROUP REPEAT TROUBLE ALARM PROVIDED TO CONTROL ROOM PANEL.
4. TWO POSITION 90° TURN THREE WAY PLUG VALVE. PLUG PORT MARKED X.
5. MINIMUM SLOPE OF 3.18MM/3.048MM REQUIRED.
6. TANK TO BE AT ELEVATION TO PROVIDE FLOODED SUCTION AT BOTH DIESEL ENGINE FUEL OIL PUMPS (ELEV. 23,500MM). ENGINE BASE IS AT ELEV 12,300MM.
7. LOCATE MANUAL BLOCK VALVE INSIDE DAY TANK ROOM WITH EXTENDED HANDWHEEL IN DIFFERENT FIRE ZONE.
8. FLAME ARRESTER TO BE MOUNTED WITHIN 4.57 M OF VENT OPENING.
9. ALL VENT AND DRAIN VALVES ON FUEL OIL PIPING SHALL BE PROVIDED WITH SCREWED CAPS OR PLUGS.
10. X DESIGNATED EQUIPMENT FURNISHED BY SELLER.
11. THIS ALARM IS DISABLED WHEN THE DIESEL IS NOT RUNNING.
12. FUTURE LINE NUMBERS ARE REPRESENTED BY "[L•]" TO BE SUPPLIED AT FINAL DESIGN STAGE.
13. SUPPLIER SHALL PROVIDE SYSTEM TO PREVENT FLOODING OF CYLINDERS DURING ENGINE SHUTDOWN BY LEAKAGE THROUGH THE FUEL PUMPS DUE TO THE DAY TANK HEAD PRESSURE (NOTE 6).
14. ALL EQUIPMENT AND PIPING EXCEPT THAT WITHIN THE DIESEL ENGINE OUTLINE IS SAFETY CLASS 3. QUALITY GROUP C (ASME, SECTION III).

LEGEND:

← ——— DENOTES PIPING SPEC CHANGE

MPL NO. R43-1070

(NOTE: LINE NUMBERS TO BE ADDED DURING DETAILED DESIGN PHASE.)

FIGURE 9.5-6 STANDBY DIESEL GENERATOR FUEL OIL AND INTAKE AND EXHAUST SYSTEMS

NOT FOR PUBLIC RELEASE

Figure 9A.4-4 Reactor Building Fire Protection at Elevation 12300 mm

NOT FOR PUBLIC RELEASE

Figure 9A.4-9 Reactor Building Fire Protection, Section A-A

NOT FOR PUBLIC RELEASE

FIGURE 9A.4-17 TURBINE BUILDING FIRE PROTECTION AT ELEVATION 2300MM
STP3&4 REV.2

NOT FOR PUBLIC RELEASE

FIGURE 9A.4-18 TURBINE BUILDING FIRE PROTECTION AT ELEVATION 6300MM
STP3&4 REV.2

NOT FOR PUBLIC RELEASE

FIGURE 9A.4-19 TURBINE BUILDING FIRE PROTECTION AT ELEVATION 12300MM
STP3&4 REV.2

NOT FOR PUBLIC RELEASE

FIGURE 9A.4-20 TURBINE BUILDING FIRE PROTECTION AT ELEVATION 19700MM
STP3&4 REV.2

NOT FOR PUBLIC RELEASE

FIGURE 9A.4-21 TURBINE BUILDING FIRE PROTECTION AT ELEVATION 27800MM
STP3&4 REV.2

NOT FOR PUBLIC RELEASE

FIGURE 9A.4-28 RADWASTE BUILDING FIRE PROTECTION, RWB SECTIONS

NOT FOR PUBLIC RELEASE

FIGURE 9A.4-29 RADWASTE BUILDING FIRE PROTECTION AT ELEVATION -1500 mm

NOT FOR PUBLIC RELEASE

FIGURE 9A.4-30 RADWASTE BUILDING FIRE PROTECTION AT ELEVATION 4800 mm

NOT FOR PUBLIC RELEASE

FIGURE 9A.4-31 RADWASTE BUILDING FIRE PROTECTION AT ELEVATION 12300 mm

NOT FOR PUBLIC RELEASE

FIGURE 9A.4-32 RADWASTE BUILDING FIRE PROTECTION AT ELEVATION 18300 mm

NOT FOR PUBLIC RELEASE

FIGURE 9A.4-33 TURBINE BUILDING FIRE PROTECTION AT ELEVATION 38300MM
STP3&4 REV.2

NOT FOR PUBLIC RELEASE

FIGURE 9A.4-34 TURBINE BUILDING FIRE PROTECTION AT ELEVATION 47200MM
STP3&4 REV.2

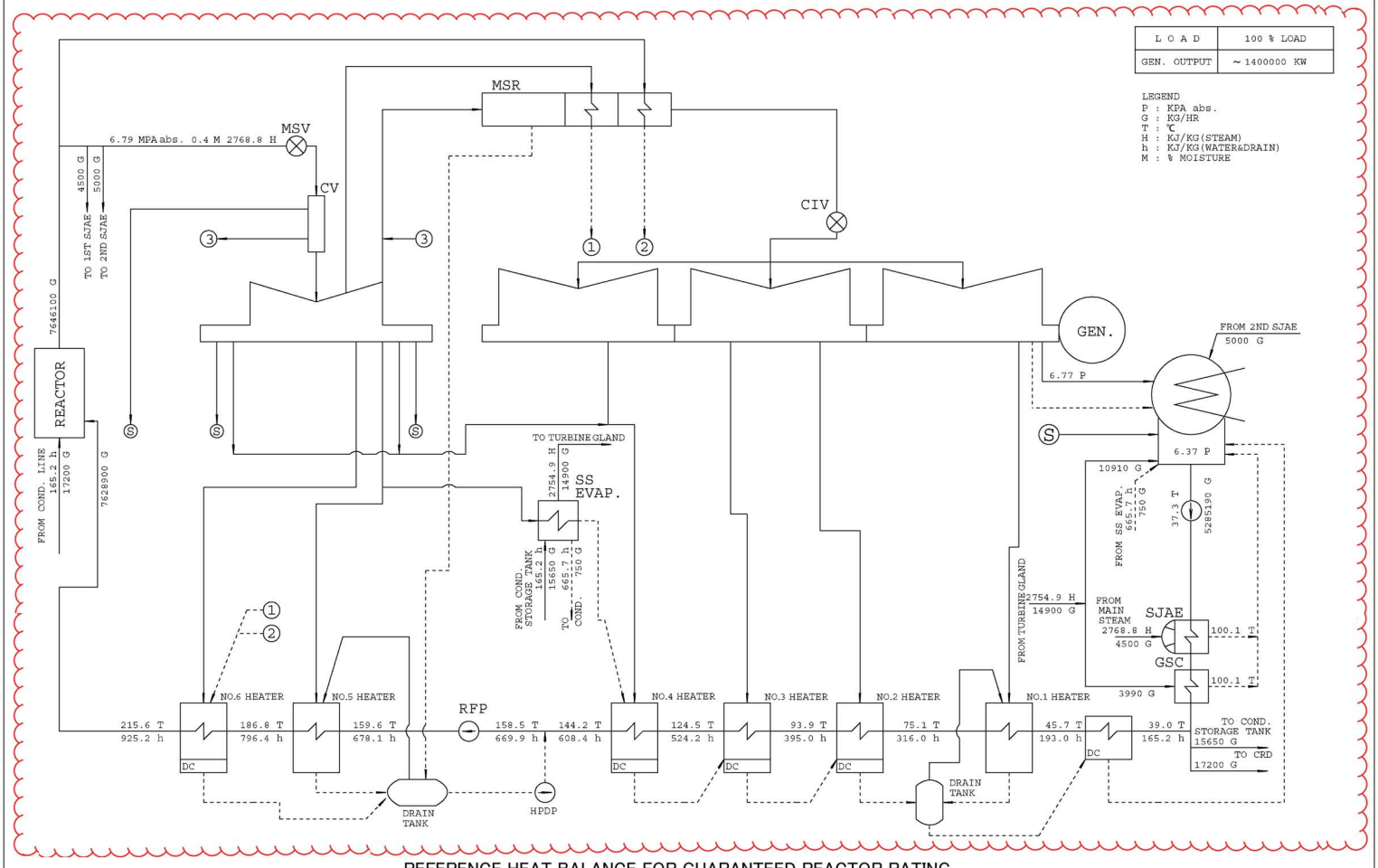

REFERENCE HEAT BALANCE FOR GUARANTEED REACTOR RATING

FIGURE 10.1-2 REFERENCE HEAT BALANCE FOR GUARANTEED REACTOR RATING

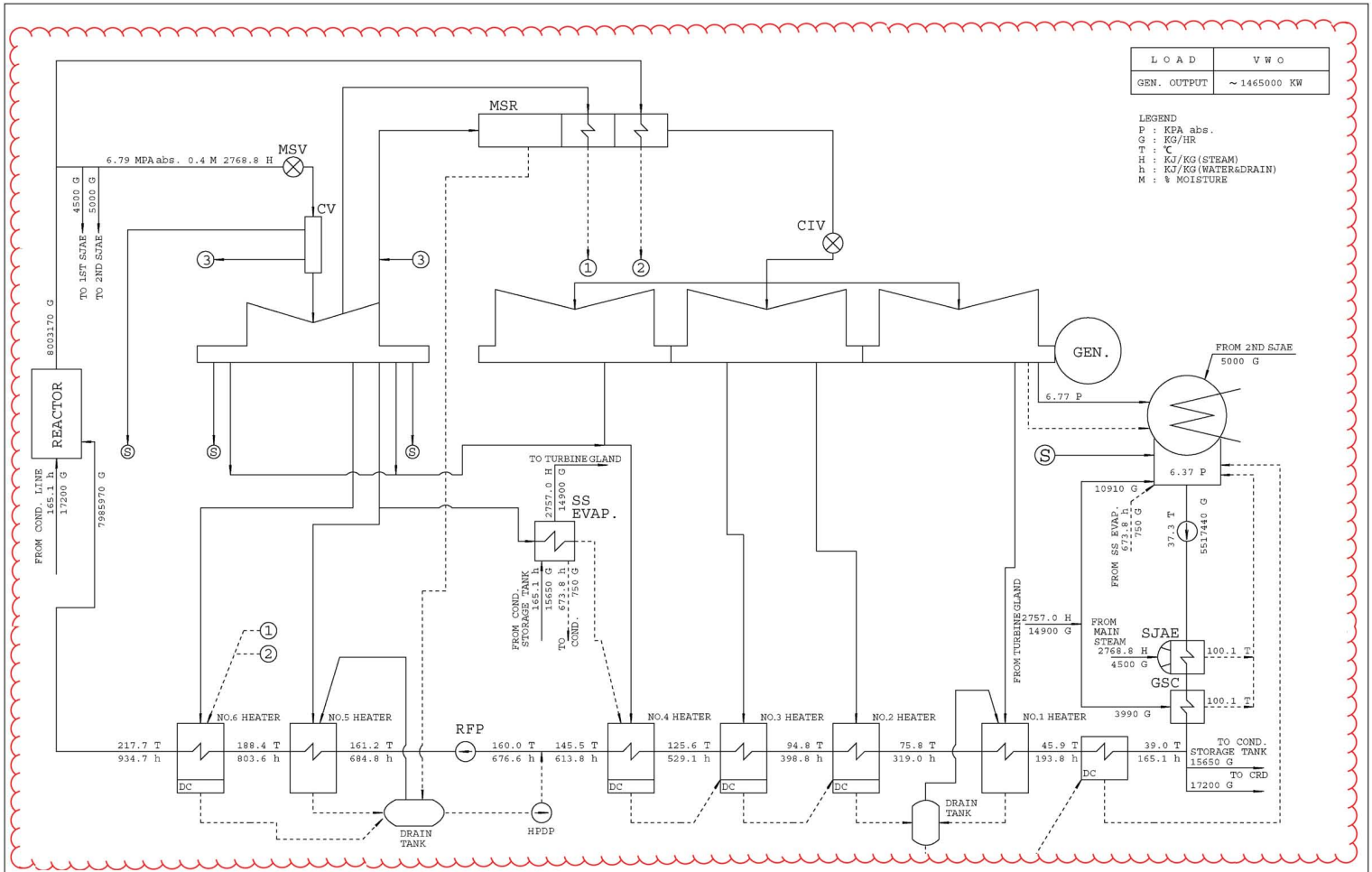

REFERENCE HEAT BALANCE FOR VALVES WIDE OPEN (VWO)

FIGURE 10.1-3 REFERENCE HEAT BALANCE FOR VALVES WIDE OPEN (VWO)

STP 3&4 Rev. 2

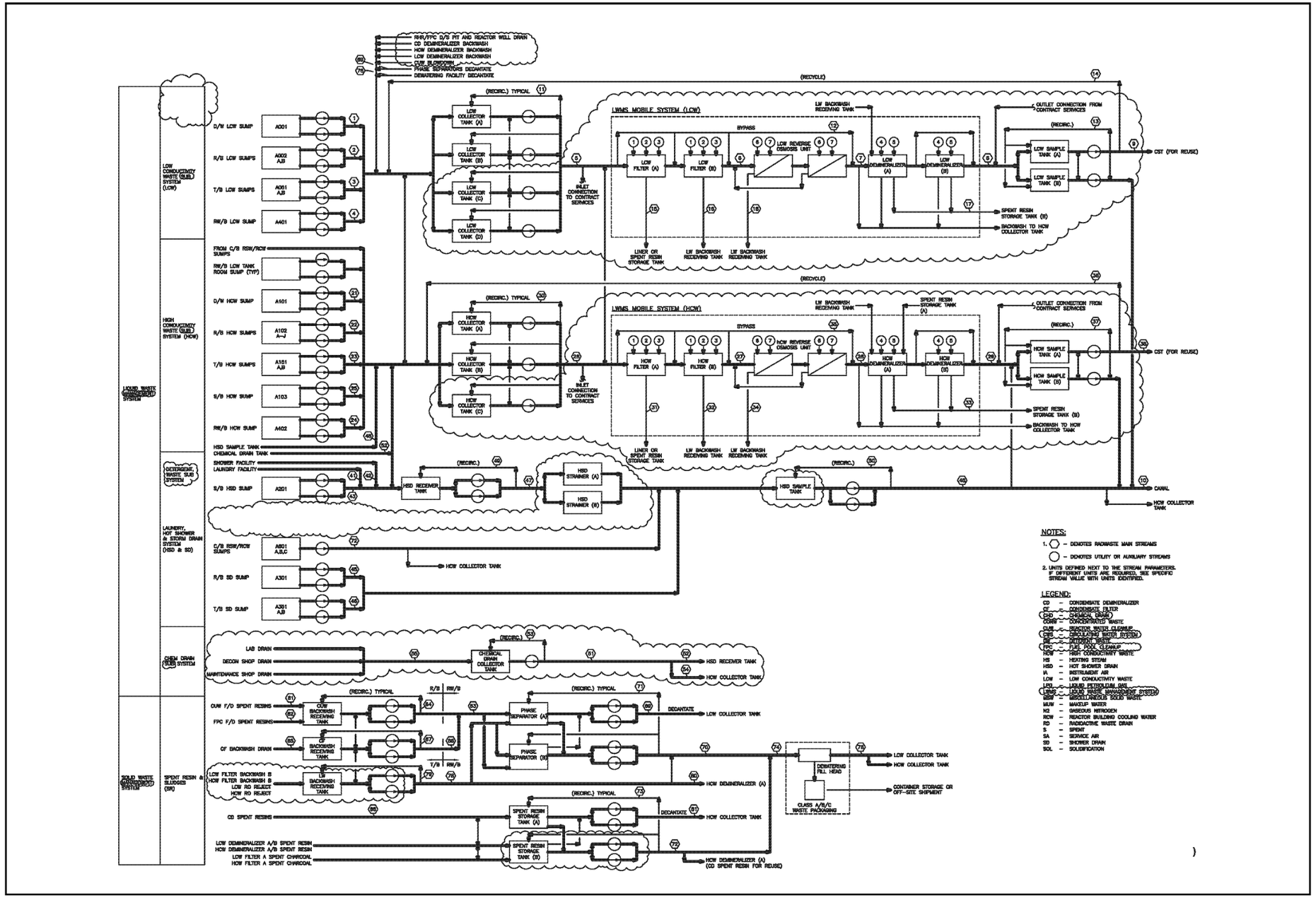

FIGURE 11.2-1 RADWASTE SYSTEM (SHEET 1 OF 2)

Stream No. ●	1	2	3	4	5	6	7	8	9	10	11	12	13	14	15	16	17	18	69	76
Sub System	LCW - RD	LCW - RD	LCW - RD	LCW - RD	LCW	LCW	LCW	LCW	LCW	LCW	LCW	LCW	LCW	LCW	LCW	LCW	LCW - Resin	LCW	LCW - SR	LCW - SR
Liquid/Slurry	Liquid	Liquid	Liquid	Liquid	Liquid	Liquid	Liquid	Liquid	Liquid	Liquid	Liquid	Liquid	Liquid	Liquid	Slurry	Slurry	Slurry	Slurry	Liquid	Liquid
Normal Batch/day	4	8	8	2	--	--	--	--	--	--	--	--	--	--	--	1/30	1/385	--	--	--
Maximum Batch/day	44	8	8	2	--	--	--	--	--	--	--	--	--	--		1	1		--	--
Batch Volume m^3 (a)	2.5	2.5	2.5	2.5	140	140	140	140	140	--	--	--	--	--	min	0.25	14.4	min	80	--
Normal Volume m^3/day	10	15	15	5	55	55	55	55	55	47.8	--	--	--	--	min	0.25	14.4	min	--	--
Normal Average Volume m^3/day	10	15	15	5	80	80	80	80	80	--	--	--	--	--	--	--	--	--	--	--
Maximum Volume m^3/day	110	15	15	5	815	815	815	815	815	145.3	--	--	--	--	min	0.25	14.4	min	--	--
Flow m^3/hour	10	10	10	10	34	34	34	34	150	40	88	34	150	150	--	--	--	--	10	10
Temperature °C	88	88	88	88	88	88	88	88	88	88	88	88	88	88	88	88	88	88	88	88
Pressure kg/cm^2	10	10	10	10	10	10	10	10	10	10	10	10	10	10	10	10	10	10	10	10
Conductivity µS/cm	~5	~5	~5	~5	~5	~5	~5	<1	<1	<1	~5	>1	<1	>1	--	--	--	--	--	--
Undissolved Solid ppm	~2	~2	~2	~2	~2	<0.1	<0.1	<0.1	<0.1	<0.1	~2	<0.1	<0.1	<0.1	18 wt%	~1700	18 wt%	~500	--	--

Stream No. ●	21	22	23	24	25	26	27	28	29	30	31	32	33	34	35	36	37	38
Sub System	HCW - RD	HCW - RD	HCW - RD	HCW - RD	HCW - RD	HCW	HCW	HCW	HCW	HCW	HCW	HCW	HCW - Resin	HCW	HCW	HCW	HCW	HCW
Liquid/Slurry	Liquid	Liquid	Liquid	Liquid	Liquid	Liquid	Liquid	Liquid	Liquid	Liquid	Slurry	Slurry	Slurry	Slurry	Liquid	Liquid	Liquid	Liquid
Normal Batch/day	--	2	2	1.2	0.8	--	--	--	--	--	1/385	12/385	1/385	12/385	--	--	--	--
Maximum Batch/day	--	22	2	1.2	0.8	--	--	--	--	--	--	--	--	--	--	--	--	--
Batch Volume m^3 (a)	2.5	2.5	2.5	2.5	2.5	140	140	140	140	140	1.4	1	14.4	12	--	--	--	140
Normal Volume m^3/day	--	5	5	3	2	15	15	15	15	--	1.4	1	14.4	12	--	--	--	15
Normal Average Volume m^3/day	--	--	--	--	--	--	--	--	--	--	--	--	--	--	--	--	--	--
Maximum Volume m^3/day	--	55	5	3	2	83	83	83	83	--	1.4	1	14.4	12	--	--	--	83
Flow m^3/hour	10	10	10	10	10	34	34	34	34	88	--	--	--	--	34	150	150	150
Temperature °C	88	88	88	88	88	88	88	88	88	88	88	88	88	88	88	88	88	88
Pressure kg/cm^2	10	10	10	10	10	10	10	10	10	10	10	10	10	10	10	10	10	10
Conductivity µS/cm	~5	~1000	~1000	~10000	~10000	1000~10000	<10	<10	<1	1000~10000	--	--	--	--	1000~10000	1000~10000	<1	<1
Undissolved Solid ppm	~2	0.05 wt%	0.05 wt%	0.05 wt%	1.25 wt%	0.05~2.00 wt%	<0.5	<0.5	<0.1	0.05~2.00 wt%	18 wt%	~1700	18 wt%	~500	0.05~2.00 wt%	0.05~2.00 wt%	<0.1	<0.1

Stream No. ●	41	42	43	44	45	46	47	48	49	50
Sub System	DW	DW	DW	Not used	DW	DW	DW	DW	DW	DW
Liquid/Slurry	Liquid	Liquid	Liquid	--	Liquid	Liquid	Liquid	Liquid	Liquid	Liquid
Normal Batch/day	--	--	--	--	8	8	--	--	--	--
Maximum Batch/day	--	--	--	--	12	12	--	--	--	--
Batch Volume m^3	--	--	2.5	--	2.5	2.5	30	30	30	--
Normal Volume m^3/day	7.5	3.8	--	--	20	20	4	4	--	--
Normal Average Volume m^3/day	--	--	--	--	--	--	--	--	--	--
Maximum Volume m^3/day	32.5	18.5	--	--	30	30	12	12	--	--
Flow m^3/hour	--	10	10	--	10	20	34	80	88	80
Temperature °C	88	88	88	--	88	88	88	88	88	88
Pressure kg/cm^2	10	10	10	--	10	10	10	10	10	10
Conductivity µS/cm	--	--	--	--	--	--	--	--	--	--
Undissolved Solid ppm	--	--	--	--	--	--	--	--	--	--

Stream No. ●	51	52	53	54	55
Sub System	CHD	CHD	CHD	CHD	CHD
Liquid/Slurry	Liquid	Liquid	Liquid	Liquid	Liquid
Normal Batch/day	--	--	--	--	--
Maximum Batch/day	--	--	--	--	--
Batch Volume m^3	4	4	4	4	4
Normal Volume m^3/day	2	2	2	2	2
Normal Average Volume m^3/day	--	--	--	--	--
Maximum Volume m^3/day	2	2	2	2	2
Flow m^3/hour	4	4	10	4	4
Temperature °C	88	88	88	88	88
Pressure kg/cm^2	10	10	10	10	10
Conductivity µS/cm	--	--	--	--	--
Undissolved Solid ppm	--	--	--	--	--

Stream No. ●	61	62	63	64	65	66	67	68	69	70	71	72	73	74	75	76	77	78	79	80	81
Sub System	SR	SR	SR	SR	SR	SR	SR	SR	LCW - SR	SR	SR	SR	SR	SR	Not used	LCW - SR	Not used	SR	SR	SR	SR
Liquid/Slurry	Slurry	Slurry	Slurry	Slurry	Slurry	Slurry	Slurry	Slurry	Liquid	Liquid	Slurry	Slurry	Slurry	Slurry	--	Liquid	--	Slurry	Slurry	Slurry	Liquid
Normal Batch/day	0.08	0.02	0.08	--	0.088	0.088	--	8/3 yr	--	--	--	--	--	--	--	--	--	--	--	--	--
Maximum Batch/day	2	1	1	--	3	3	--	2	--	--	--	--	--	--	--	--	--	--	--	--	--
Batch Volume m^3	15	20	30/35	--	35	35	--	30	80	--	--	--	--	--	--	--	--	--	--	--	--
Normal Volume m^3/day	15	20	30/35	--	35	35	--	30	--	--	--	--	--	--	--	--	--	--	--	--	--
Normal Average Volume m^3/day	1.2	0.4	1.8	--	3.1	3.1	--	0.18	--	--	--	--	--	--	--	--	--	--	--	--	--
Maximum Volume m^3/day	30	20	35	--	105	105	--	80	--	--	--	--	--	--	--	--	--	--	--	--	--
Flow m^3/hour	--	--	30	90	--	30	90	--	10	10	190	10	90	10	--	10	--	30	90	30	10
Temperature °C	88	88	88	88	88	88	88	88	88	88	88	88	88	88	--	88	--	88	88	88	88
Pressure kg/cm^2	10	10	10	10	10	10	10	10	10	10	10	10	10	10	--	10	--	10	10	10	10
Conductivity µS/cm	--	--	--	--	--	--	--	--	--	--	--	--	--	--	--	--	--	--	--	--	--
Undissolved Solid ppm	2200	2800	2200~2800	2200~2800	850	850	850	10 wt%	--	10~15 wt%	10 wt%	15 wt%	15 wt%	10~15 wt%	--	--	--	>2000	>2000	>2000	--

Stream No. ○	1	2	3	4	5	6	7
Utility	MUW	IA	SA	MUW	SA	MUW	SA
Pressure kg/cm^2	4.0	4.0	4.0	4.0	4.0	4.0	4.0
Flow m^3/hour	10	38 Nm^3/hr	22 Nm^3/hr	10	112 Nm^3/hr	10	112 Nm^3/hr
Heat kcal/hr	--	--	--	--	--	--	--
Temperature °C	≤40	≤40	≤40	≤40	≤40	≤40	≤40

Notes:

(a) Based on one collector tank batch

FIGURE 11.2-1 RADWASTE SYSTEM (SHEET 2 OF 2)

DESCRIPTION	SHEET NUMBER	SUBSYSTEM		LOCATION
FUNDAMENTAL FLOW DIAGRAM	2	VARIOUS	N/A	N/A
LOW CONDUCTIVITY COLLECTOR TANKS A,B,C,D	3	LCW	LOW CONDUCTIVITY WASTE	RADWASTE BLDG
LCW FILTER A,B	4			
LCW REVERSE OSMOSIS UNIT	4a			
LCW DEMINERALIZER A,B,; NEW RESIN HOPPER	5			
LCW SAMPLE TANK A,B AND CANAL DISCHARGE	6	LCW	LOW CONDUCTIVITY WASTE	
HIGH CONDUCTIVITY COLLECTOR TANKS A,B,C	7	HCW	HIGH CONDUCTIVITY WASTE	
DELETED	8			
	9			
HCW FILTER A,B	9a			
	10			
HCW REVERSE OSMOSIS UNIT	10a			
	11			
HCW DEMINERALIZER A,B	11a	HCW	HIGH CONDUCTIVITY WASTE	RADWASTE BLDG
HCW SAMPLE TANKS A,B	11b	HCW	HIGH CONDUCTIVITY WASTE	RADWASTE BLDG
HSD RECEIVING TANK	12	HSD	SHOWER AND LAUNDRY DRAINS	SERVICE BLDG
HSD STRAINER A,B	13	HSD	SHOWER AND LAUNDRY DRAINS	RADWASTE BLDG
HSD SAMPLE TANK	14	HSD	SHOWER AND LAUNDRY DRAINS	RADWASTE BLDG
CHEMICAL DRAIN COLLECTOR TANK	14a	CHD	LAB, DECON, MAINT, SHOP DRAIN	RADWASTE BLDG
CUW AND CF BACKWASH RECEIVING TANKS	15	SR	SPENT RESIN	REACTOR/TURBINE BLDG
LW BACKWASH RECEIVING TANK	15a	SR	SLUDGE	RADWASTE BLDG
PHASE SEPERATORS A,B	16	SR	POWDERED SPENT RESIN/SLUDGE	
SPENT RESIN STORAGE TANK AND DEWATERING FACILITY	17	SR	SPENT RESIN	
	18			
	19			
	20			
	21			
DELETED	22			
	23			
	24			
	25			
	26			
	27			
	28			
	29			
	30			
	31			
	32			
	33			
	34			
	35			
	36			

NOTES:

1. SYSTEM DESIGN CONDITION

SYSTEM DESIGN CONDITIONS ARE SHOWN AS FOLLOWS, UNLESS OTHERWISE NOTED.

ITEM		APPLICATION	
CLASS		4G	
MAXIMUM OPERATION PRESSURE (MPa G)		10.0	
MAXIMUM OPERATION TEMPERATURE (°C)		65	
NORMAL OPERATION TEMPERATURE (°C)		BELOW 60	
SEISMIC CATEGORIZATION		B	
PROCESS FLUID		WATER	
PIPING MATERIAL	SS	CORROSIVES	
	CS	NORMAL	
PIPING THICKNESS	SS	SCH40	
	CS	OVER 55A	SCH40
		BELOW 55A	SCH80

2. ALL EQUIPMENTS & INSTRUMENTS ARE PREFIXED BY SYSTEM NUMBER K17 AND SUBSYSTEM ABBREVIATION UNLESS OTHERWISE NOTED.
3. INSTRUMENTS WITH PART NUMBER OF THE 600 SERIES ARE LOCATED IN MAIN CONTROL ROOM (MCR).
4. IT IS INTENDED THAT AN AIR BREAK BE PROVIDED TO PREVENT FLOW FROM THE RW/B HCW INTO THE C/B.
5. TANKS, EQUIPMENT AND PIPING CONTAINING CHEMICALS COVERED BY LOCAL, STATE AND FEDERAL EPA REGULATIONS 40CFR PARTS 100 TO 790 SHALL BE PROTECTED WITH 110% CAPACITY SECONDARY CONTAINMENTS, LINED TRENCHES, LINED AND DIKED AREAS OR DOUBLE WALLED PIPING WITH LEAK DETECTORS AND ALARMS.
6. ECCS EQUIPMENT ROOM SUMP BACKFLOW PROTECTION CHECK VALVES ARE SEISMIC CLASS A????
7. SAFETY RELATED HIGH HIGH LEVEL SIGNAL TRIPS PUMPS AND CLOSES VALVES TO TERMINATE THE RESPECTIVE RSW DIVISIONAL FLOW AND UHS SUPPLY.
8. PIPE WITH A DESIGN PRESSURE OF 2.82 MPa OR GREATER SHALL HAVE ITS MINIMUM WALL THICKNESS NO LESS THAN THAT OF A STANDARD WEIGHT PIPE. THICKER THAN STANDARD WEIGHT PIPE SHALL BE USED IF REQUIRED BY THE DESIGN PRESSURE OR OTHER REQUIREMENTS.
9. VALVES WITH A DESIGN PRESSURE OF 2.82 MPa OR GREATER SHALL BE A MINIMUM OF CLASS 300, OR OF A HIGHER CLASS IF REQUIRED BY THE DESIGN PRESSURE.

BUILDING SYMBOL

1. DW DRYWELL
2. R/B REACTOR BUILDING
3. C/B CONTROL BUILDING
4. T/B TURBINE BUILDING
5. S/B SERVICE BUILDING
6. RW/B RADWASTE BUILDING

VALVE SYMBOLS

- BALL VALVE
- BALL VALVE (CLOSED)
- BUTTERFLY VALVE
- CHECK VALVE
- GATE VALVE
- GATE VALVE (CLOSED)
- GLOBE VALVE
- PLUG VALVE
- PLUG VALVE (CLOSED)

LEGEND

1. VALVE OPERATORS ARE DEPICTED AS FOLLOWS:

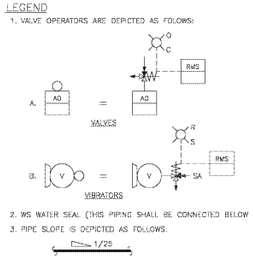

2. WS WATER SEAL (THIS PIPING SHALL BE CONNECTED BELOW LL LEVEL).
3. PIPE SLOPE IS DEPICTED AS FOLLOWS:

1/25

4. - PUMP.

REFERENCE DOCUMENTS

	MPL NO.
1. VALVE GLAND LEAKAGE, RADWASTE SYSTEM P&ID	K17-1010
2. CONDENSATE DEMINERALIZER P&ID	N27-1010
3. FUEL POOL COOLING & CLEANUP SYSTEM P&ID	G41-1010
4. CONDENSATE FILTER FACILITY P&ID	N26-1010
5. REACTOR WATER CLEANUP SYSTEM P&ID	G31-1010
6. REACTOR BUILDING COOLING WATER SYSTEM P&ID	P21-1010
7. STATION SERVICE AIR SYSTEM P&ID	P51-1010
8. INSTRUMENT AIR SYSTEM P&ID	P52-1010
9. MAKEUP WATER CONDENSATE SYSTEM P&ID	F13-1010
10. AREA RADIATION MONITORING SYSTEM P&ID	D21-1010
11. ATMOSPHERIC CONTROL SYSTEM P&ID	T31-1010
12. HVAC SYSTEM P&ID	U41-1010
13. SAMPLING SYSTEM P&ID	P81-1010
14. MAKEUP WATER PURIFIED SYSTEM P&ID	F11-1010
15. RESIDUAL HEAT REMOVAL SYSTEM P&ID	E11-1010
16. HEATING STEAM AND CONDENSATE RETURN SYSTEM P&ID	P61-1010
17. PROCESS RADIATION MONOTORING SYSTEM P&ID	D11-1010
18. REACTOR SERVICE WATER SYSTEM P&ID	P41-1010
19. REACTOR BUILDING COOLING WATER/REACTOR SERVICE WATER SYSTEM IBD	P21-1030

FIGURE 11.2-2 RADWASTE SYSTEM (SHEET 1 OF 36)

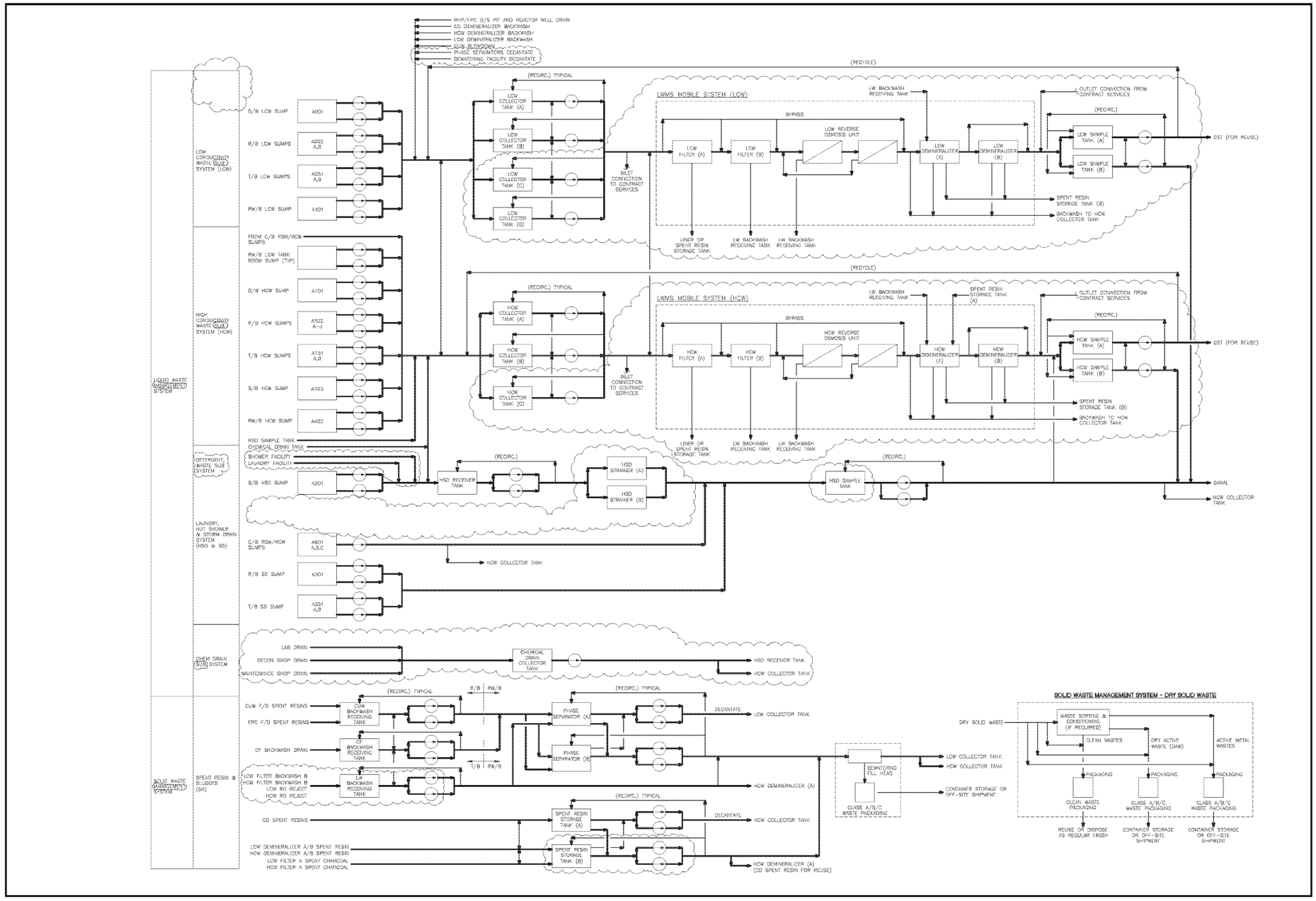

FIGURE 11.2-2 RADWASTE SYSTEM (SHEET 2 OF 36)

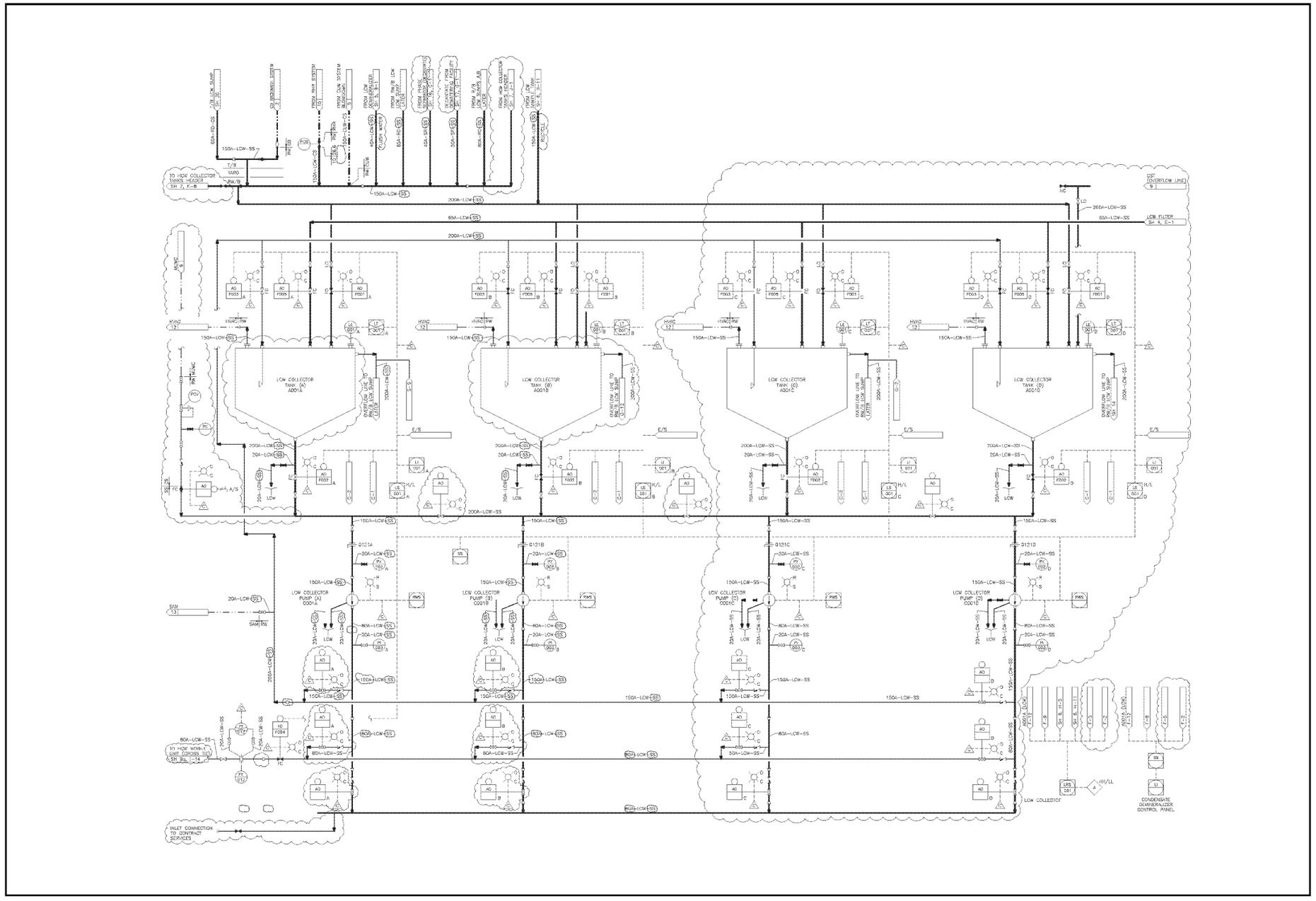

FIGURE 11.2-2 RADWASTE SYSTEM (SHEET 3 OF 36)

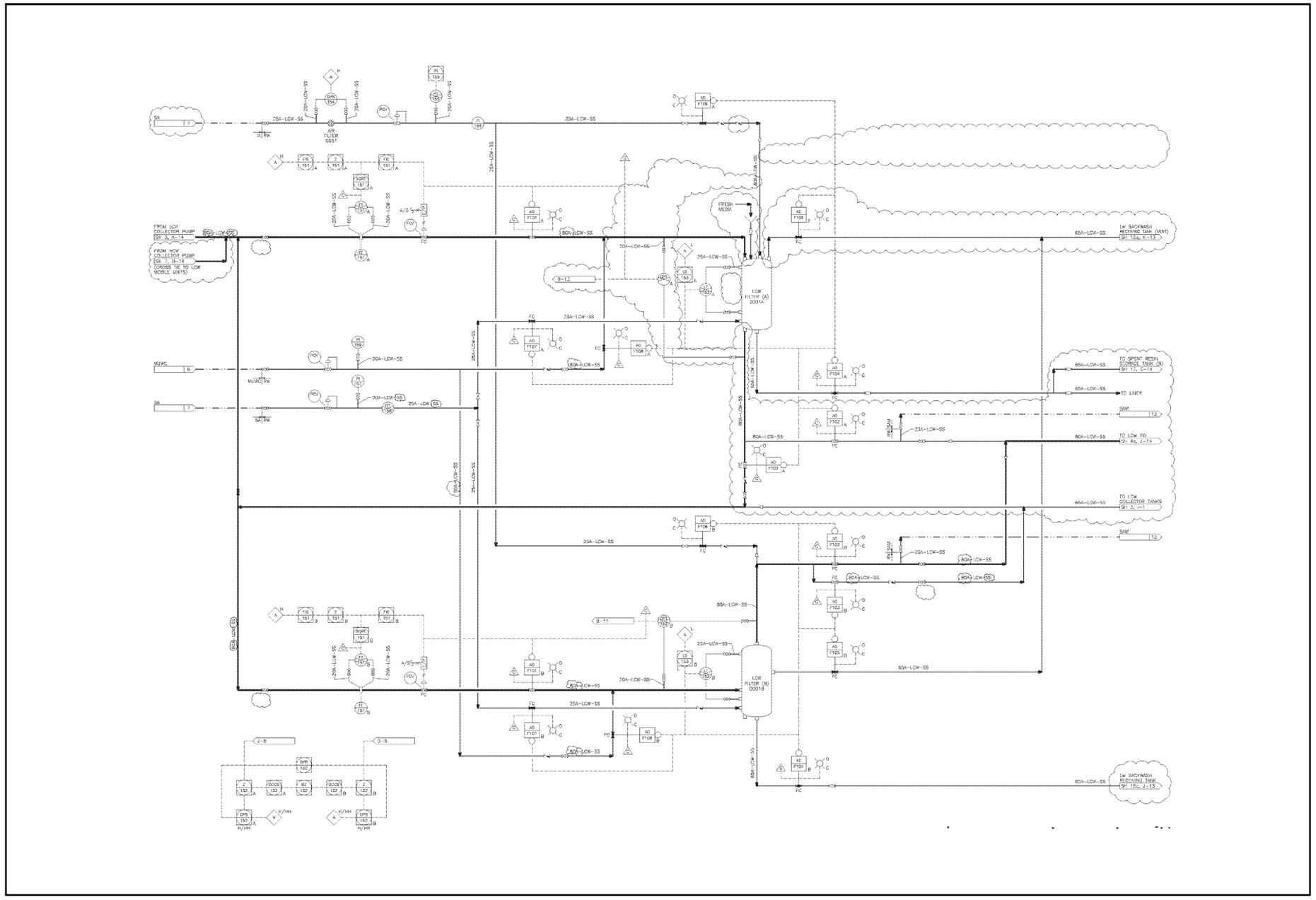

FIGURE 11.2-2 RADWASTE SYSTEM (SHEET 4 OF 36)

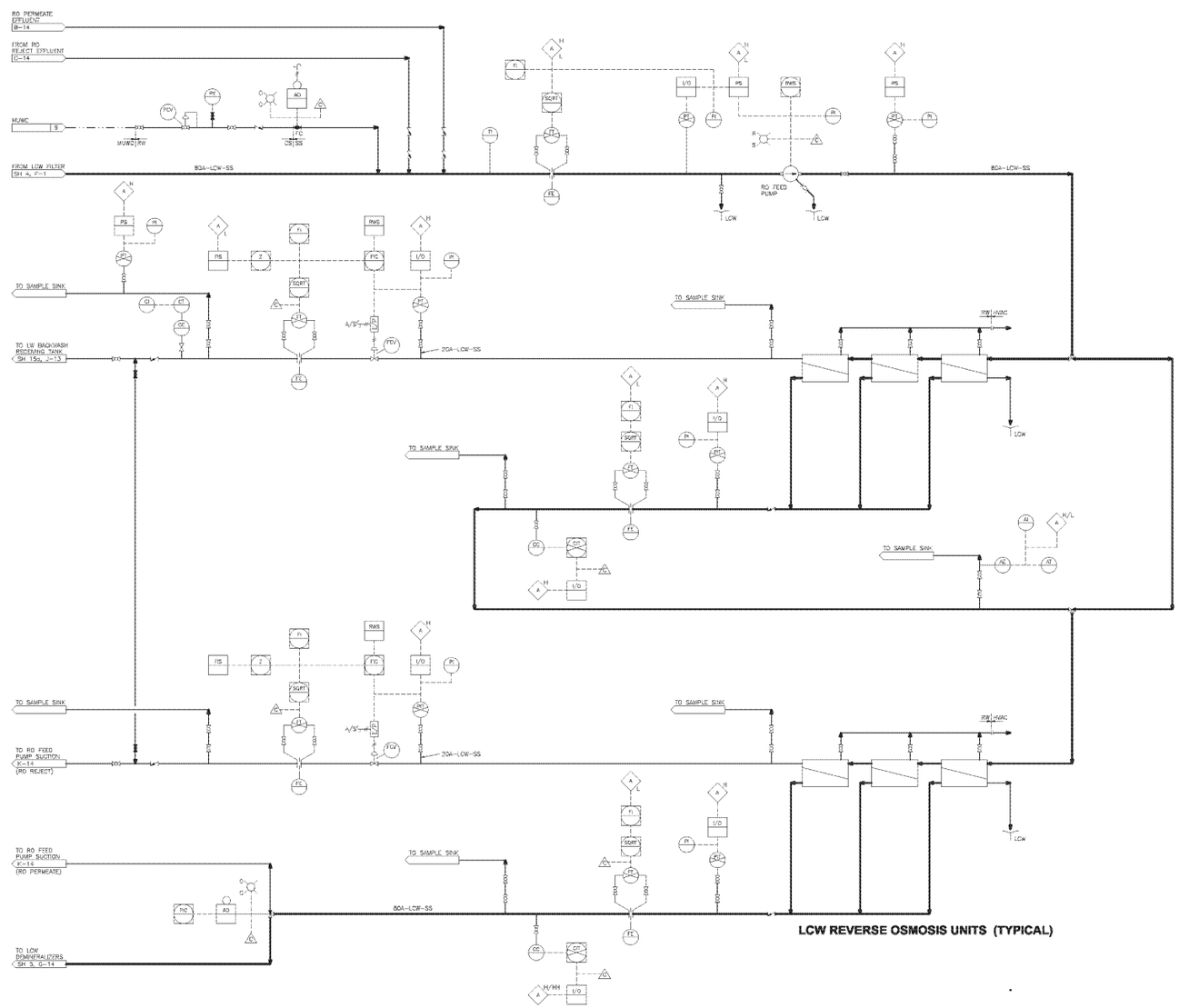

FIGURE 11.2-2 RADWASTE SYSTEM (SHEET 4a OF 36)

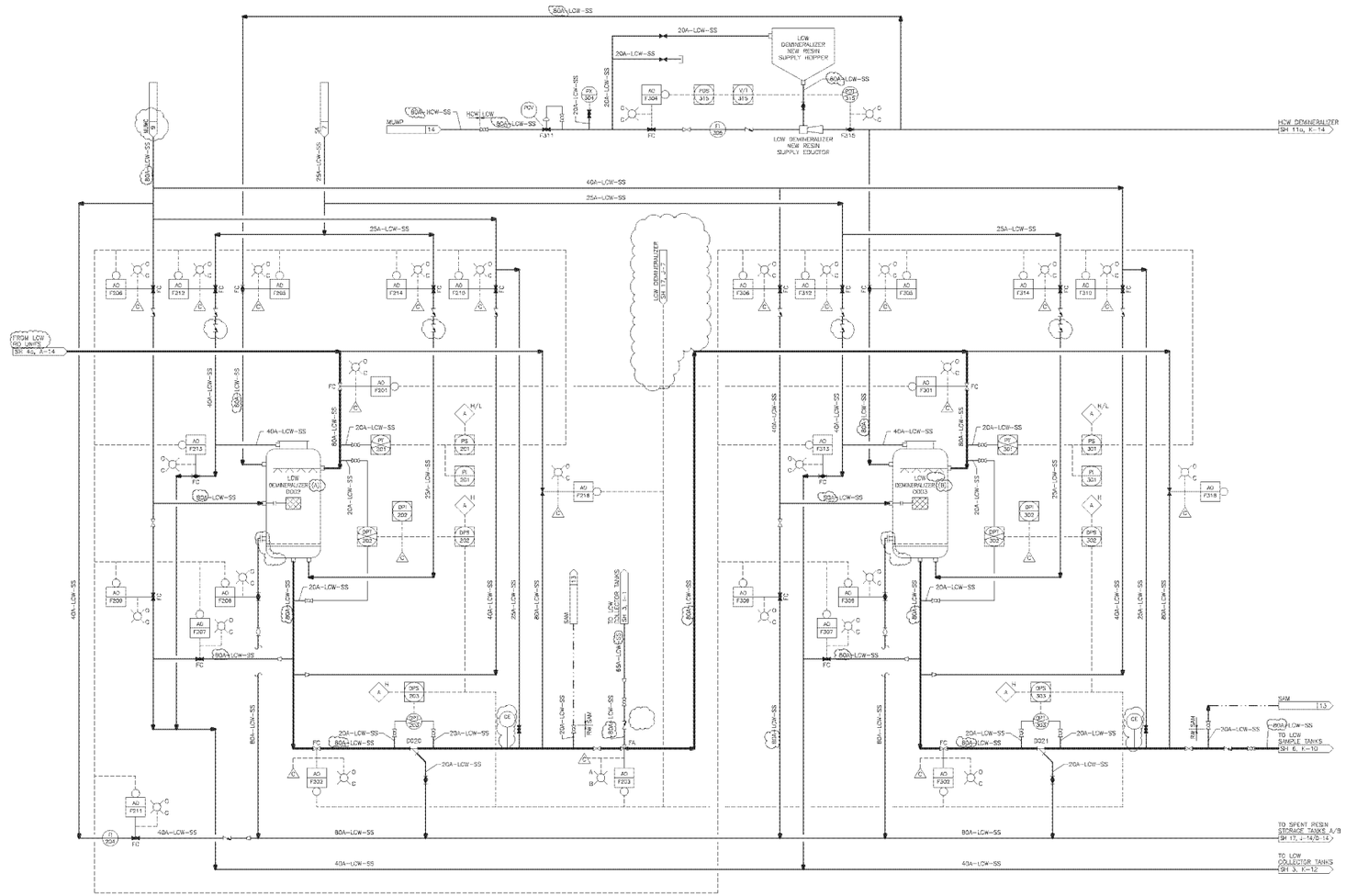

FIGURE 11.2-2 RADWASTE SYSTEM (SHEET 5 OF 36)

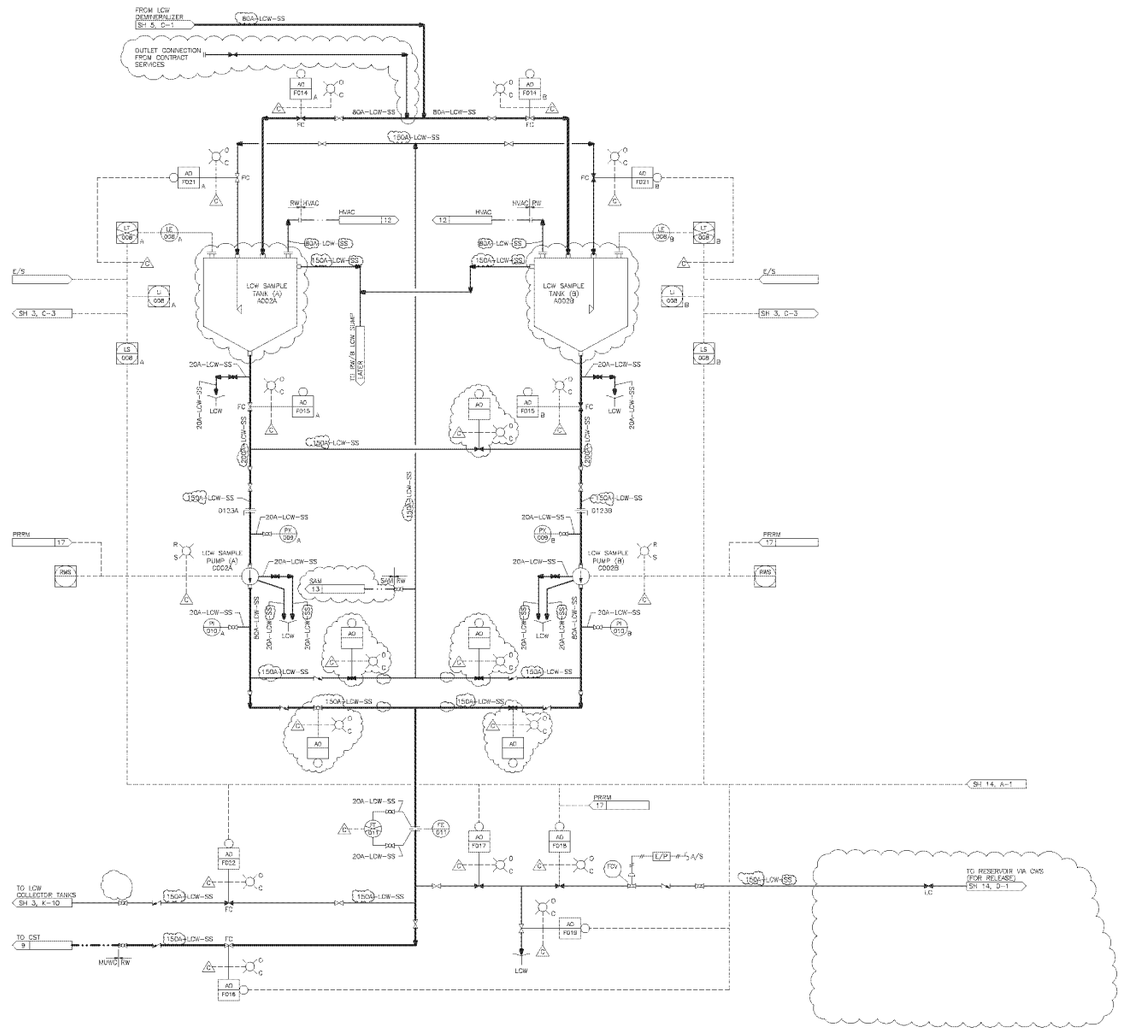

FIGURE 11.2-2 RADWASTE SYSTEM (SHEET 6 OF 36)

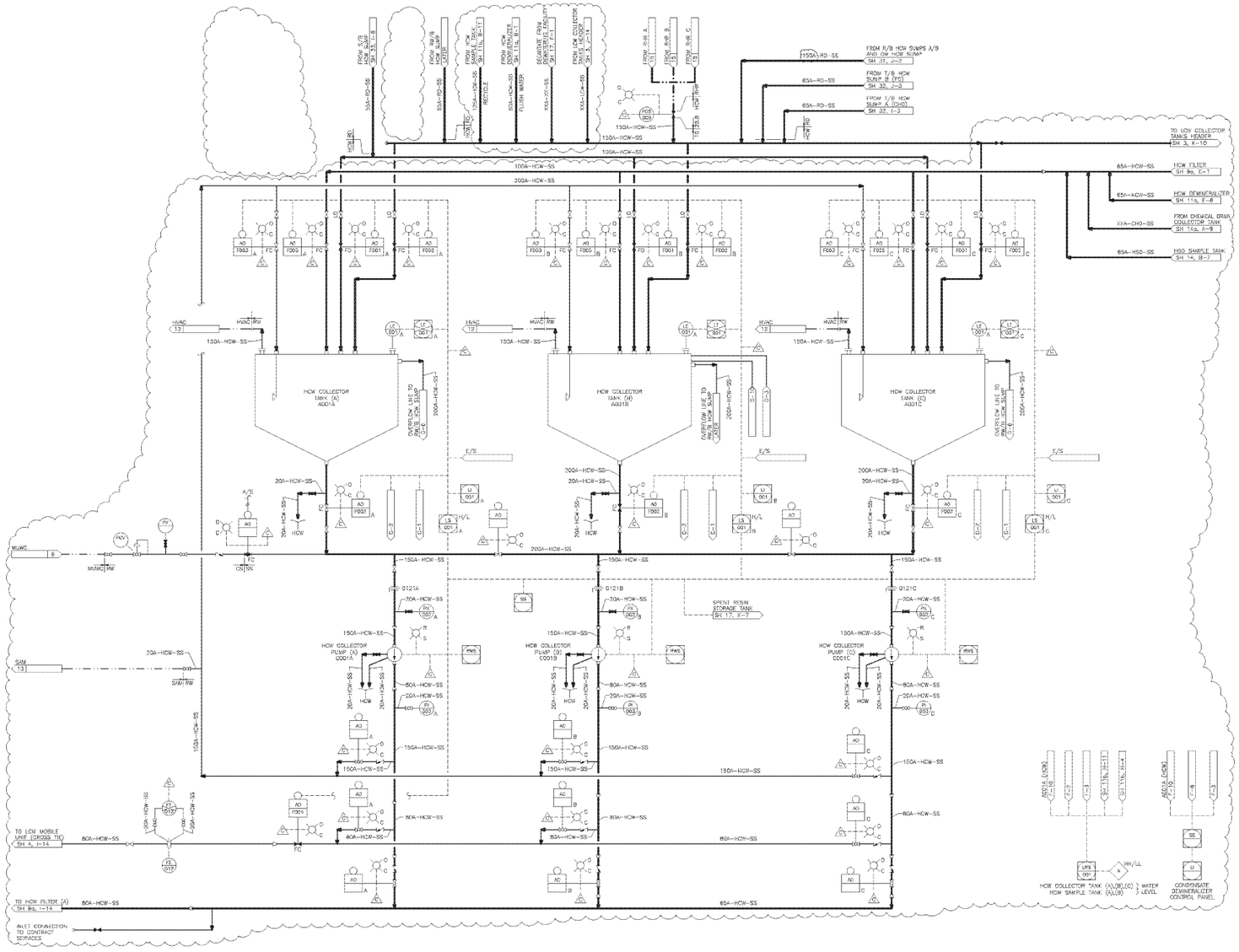

FIGURE 11.2-2 RADWASTE SYSTEM (SHEET 7 OF 36)

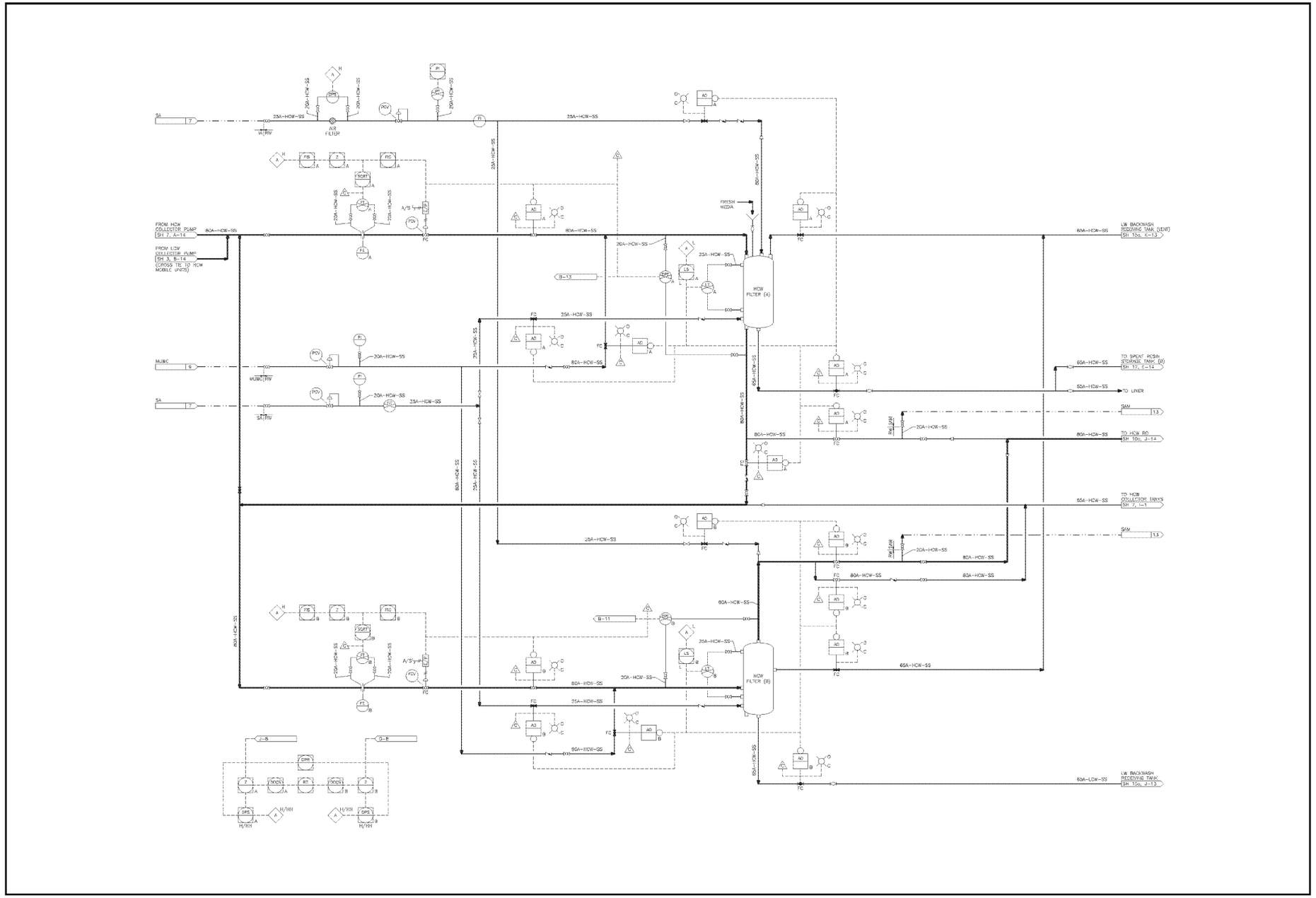

FIGURE 11.2-2 RADWASTE SYSTEM (SHEET 9a OF 36)

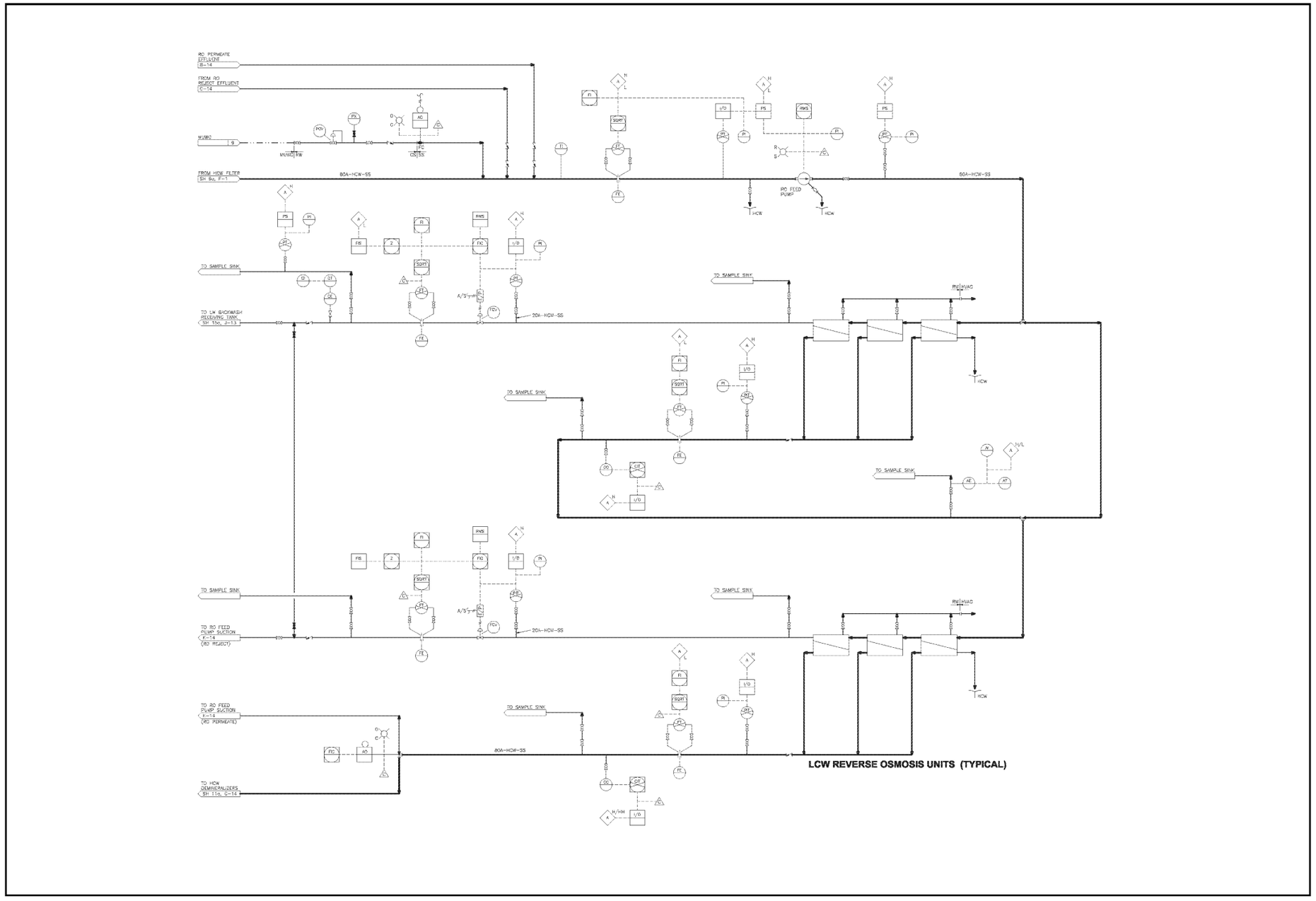

FIGURE 11.2-2 RADWASTE SYSTEM (SHEET 10a OF 36)

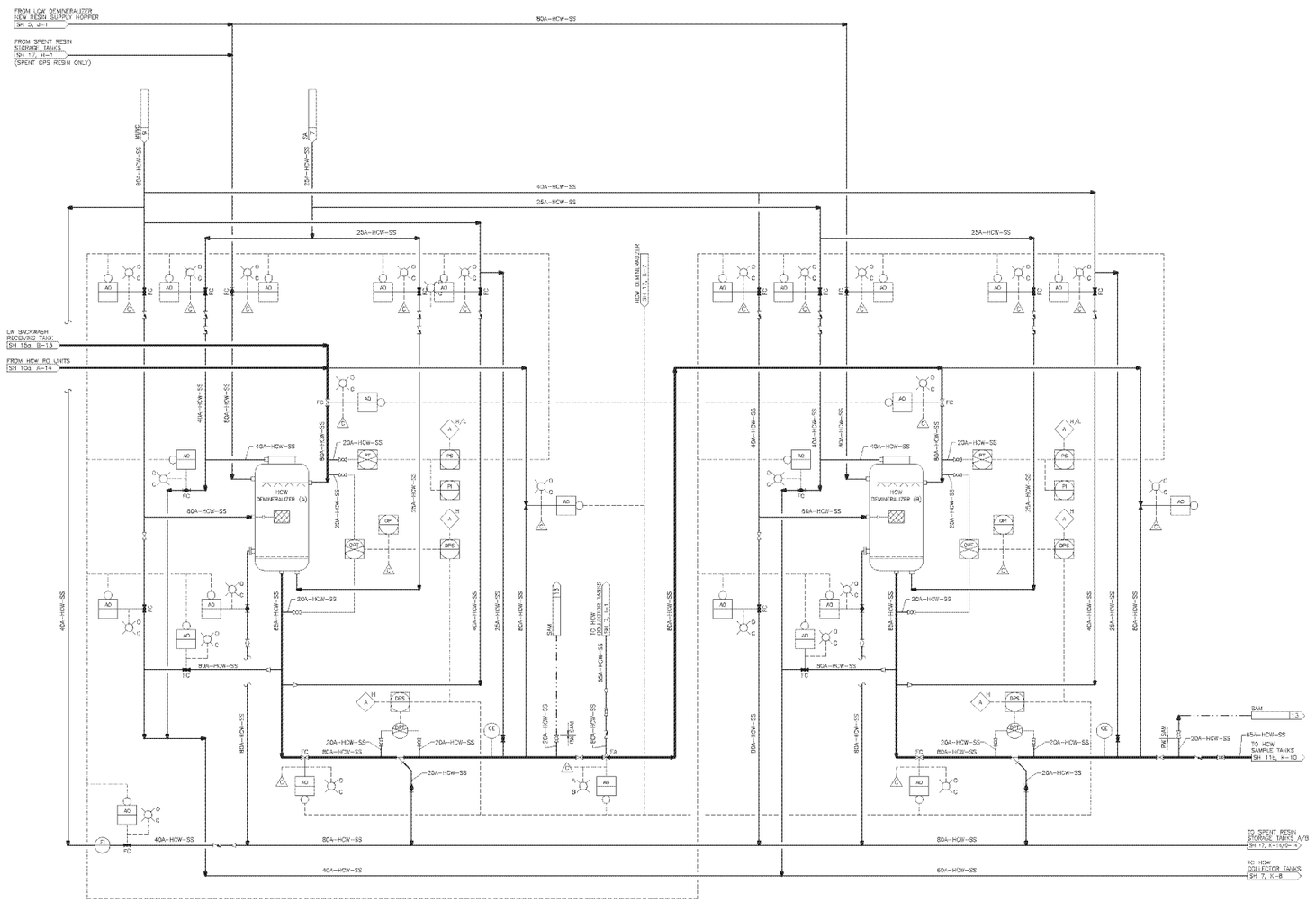

FIGURE 11.2-2 RADWASTE SYSTEM (SHEET 11a OF 36)

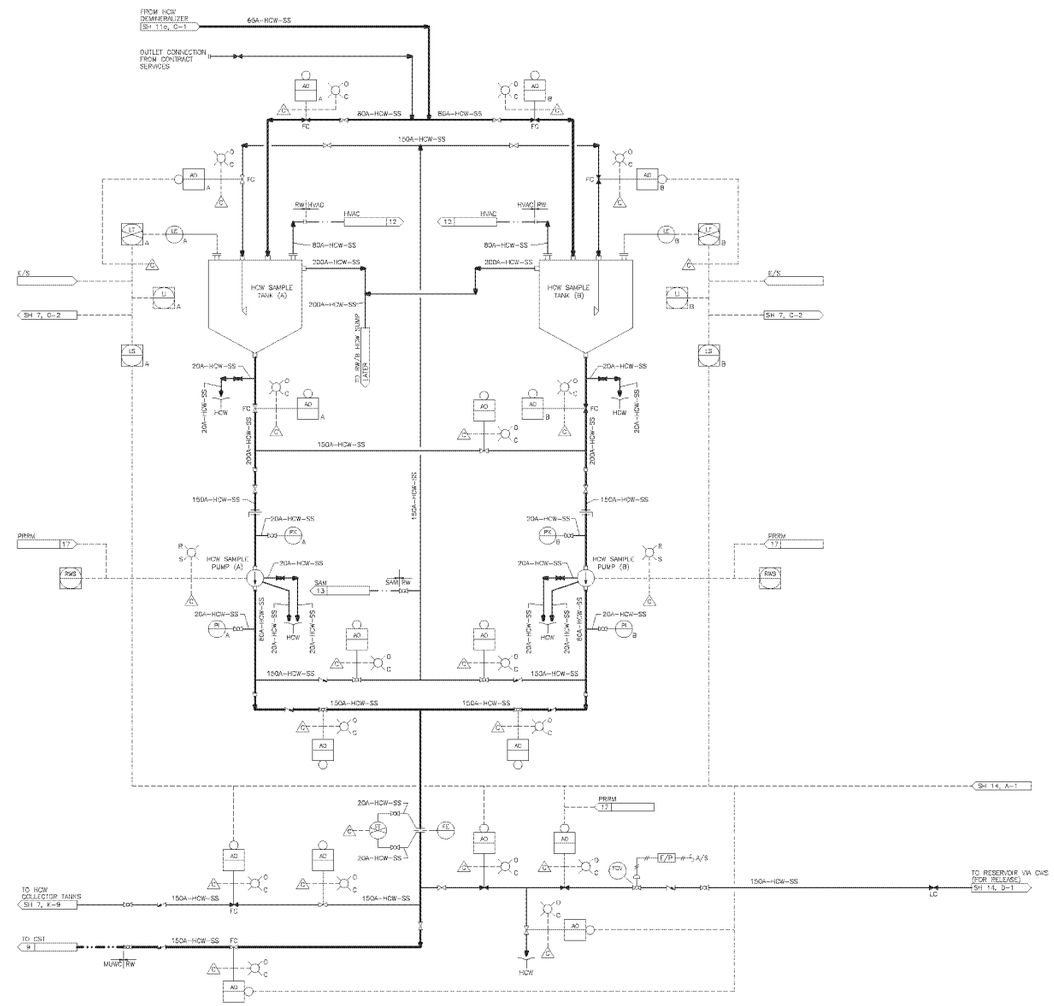

FIGURE 11.2-2 RADWASTE SYSTEM (SHEET 11b OF 36)

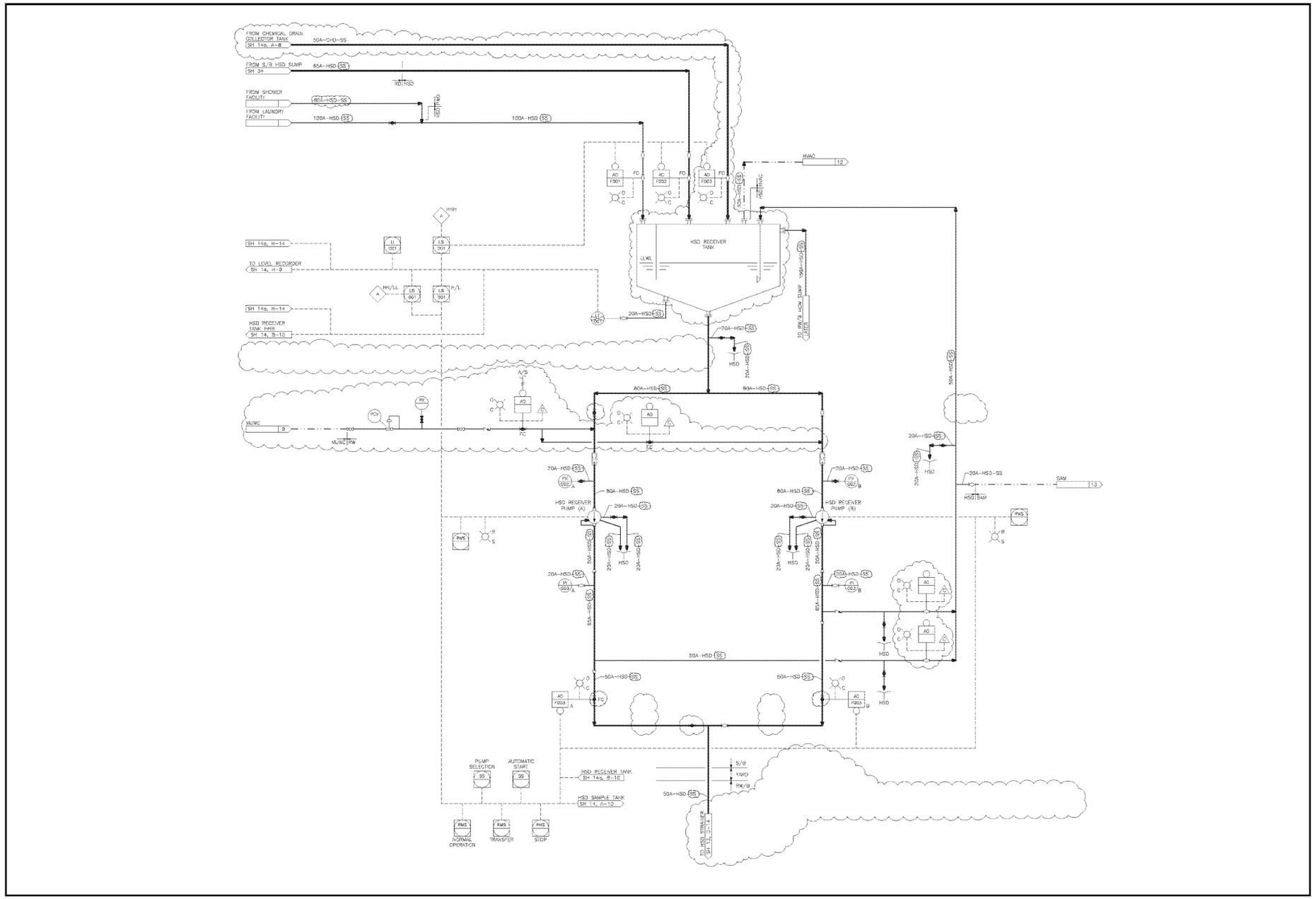

FIGURE 11.2-2 RADWASTE SYSTEM (SHEET 12 OF 36)

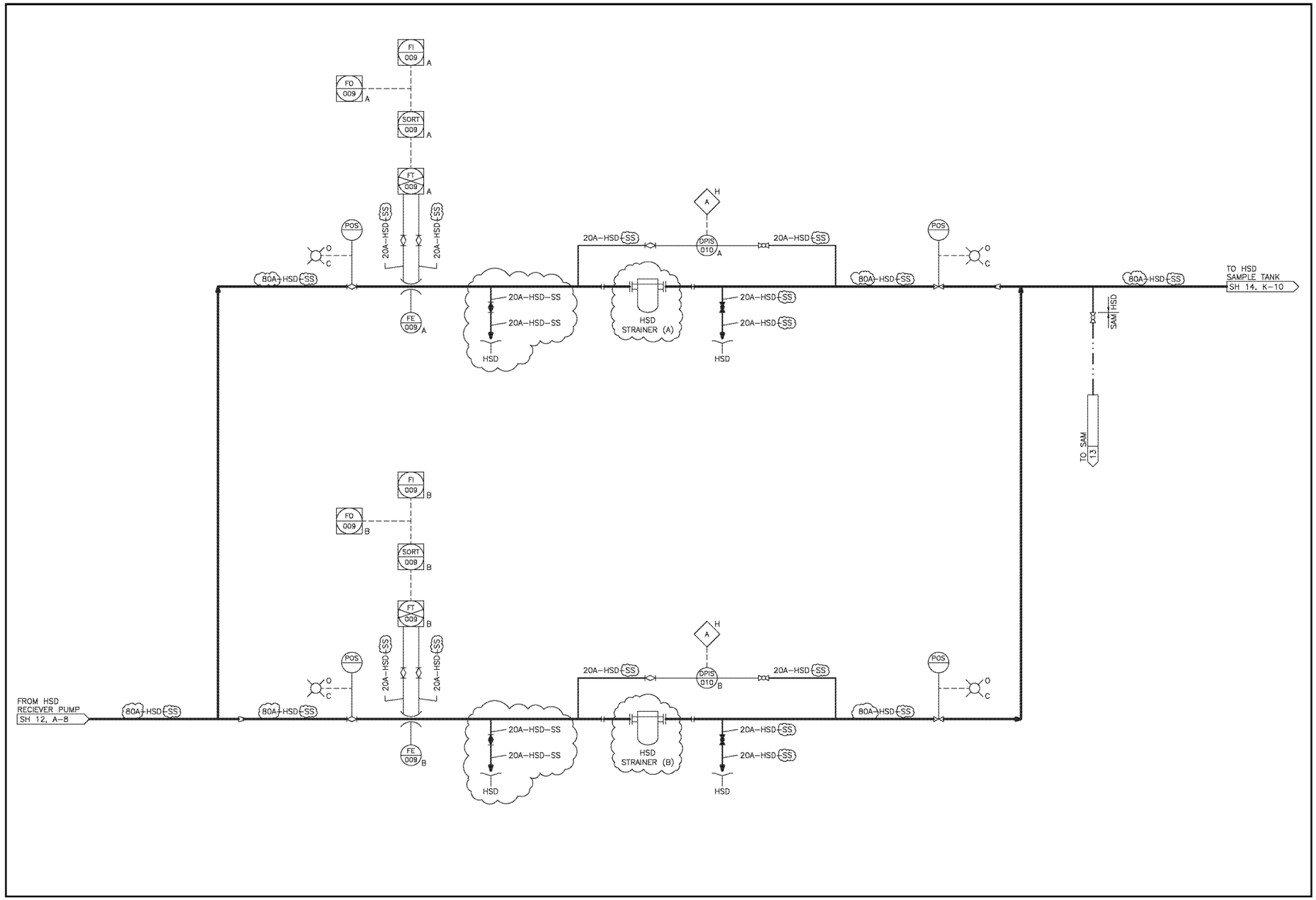

FIGURE 11.2-2 RADWASTE SYSTEM (SHEET 13 OF 36)

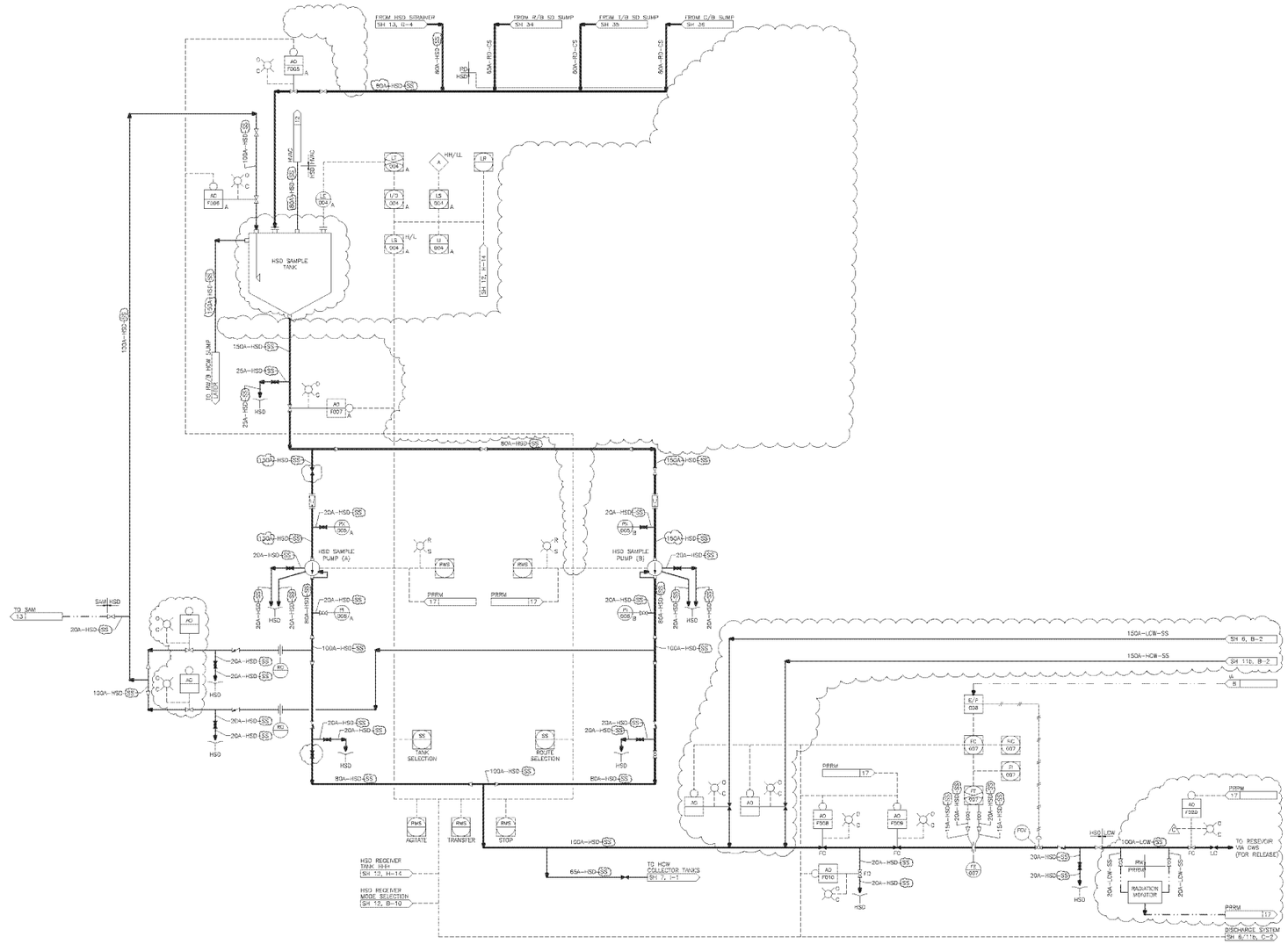

FIGURE 11.2-2 RADWASTE SYSTEM (SHEET 14 OF 36)

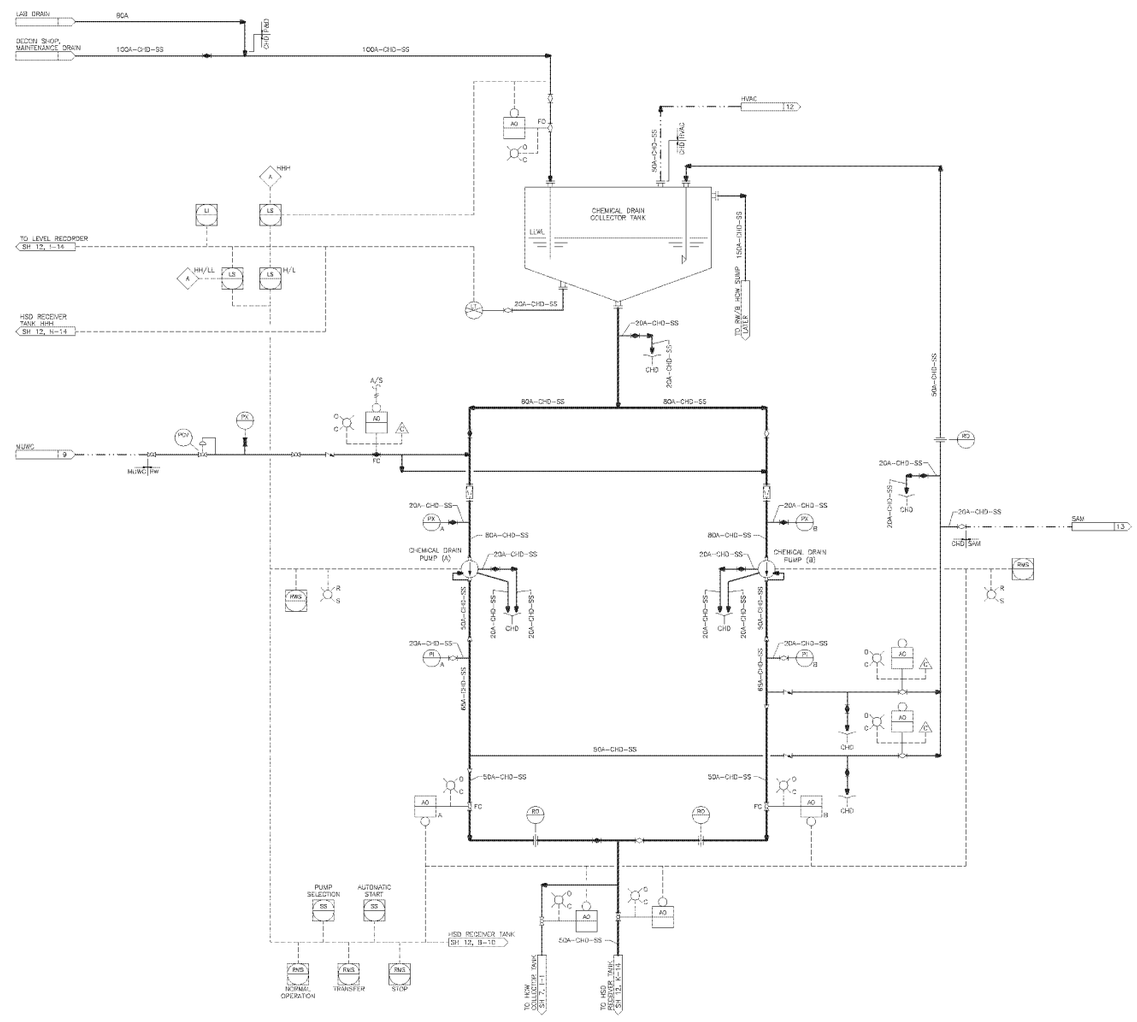

FIGURE 11.2-2 RADWASTE SYSTEM (SHEET 14a OF 36)

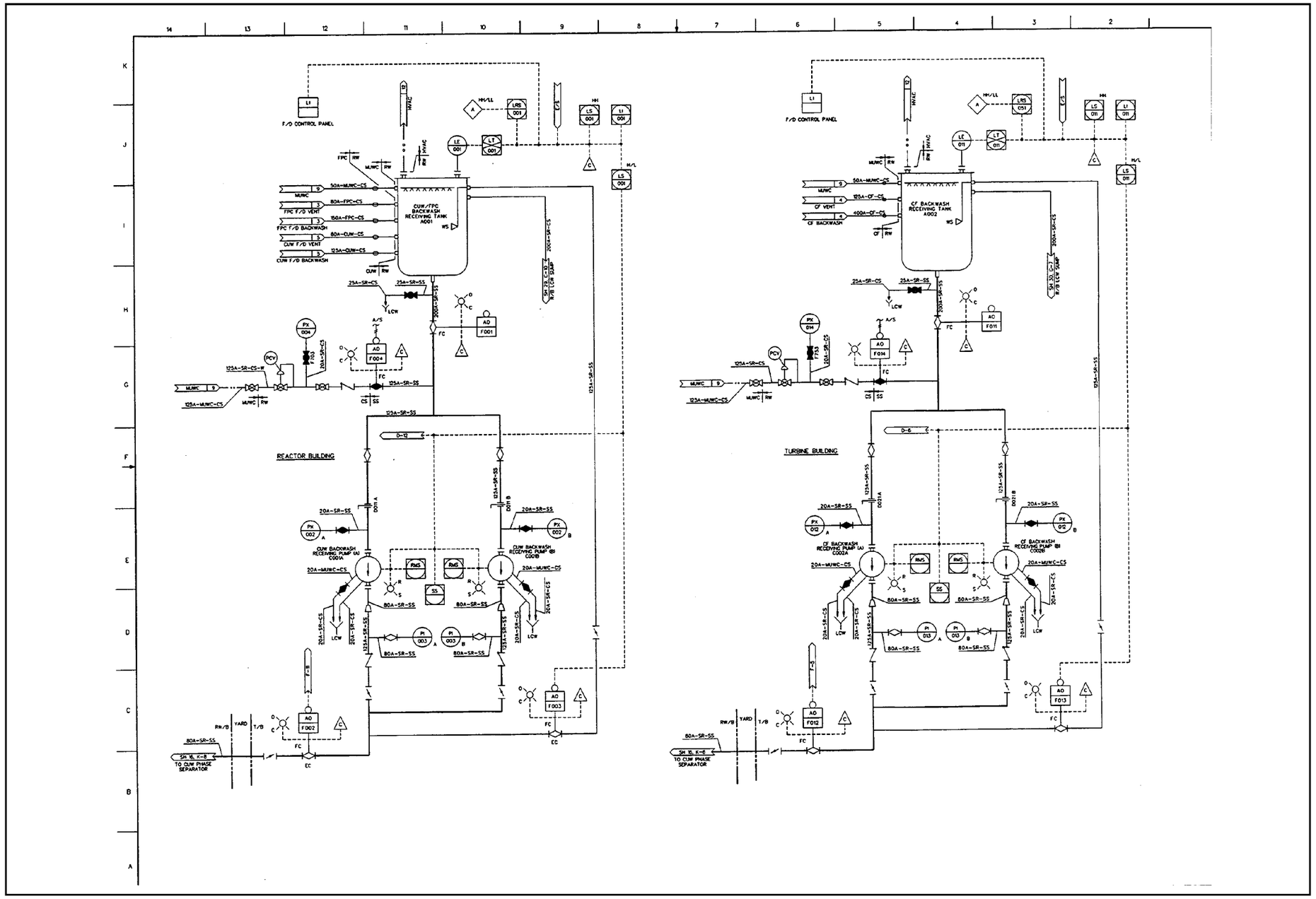

FIGURE 11.2-2 RADWASTE SYSTEM (SHEET 15 OF 36)

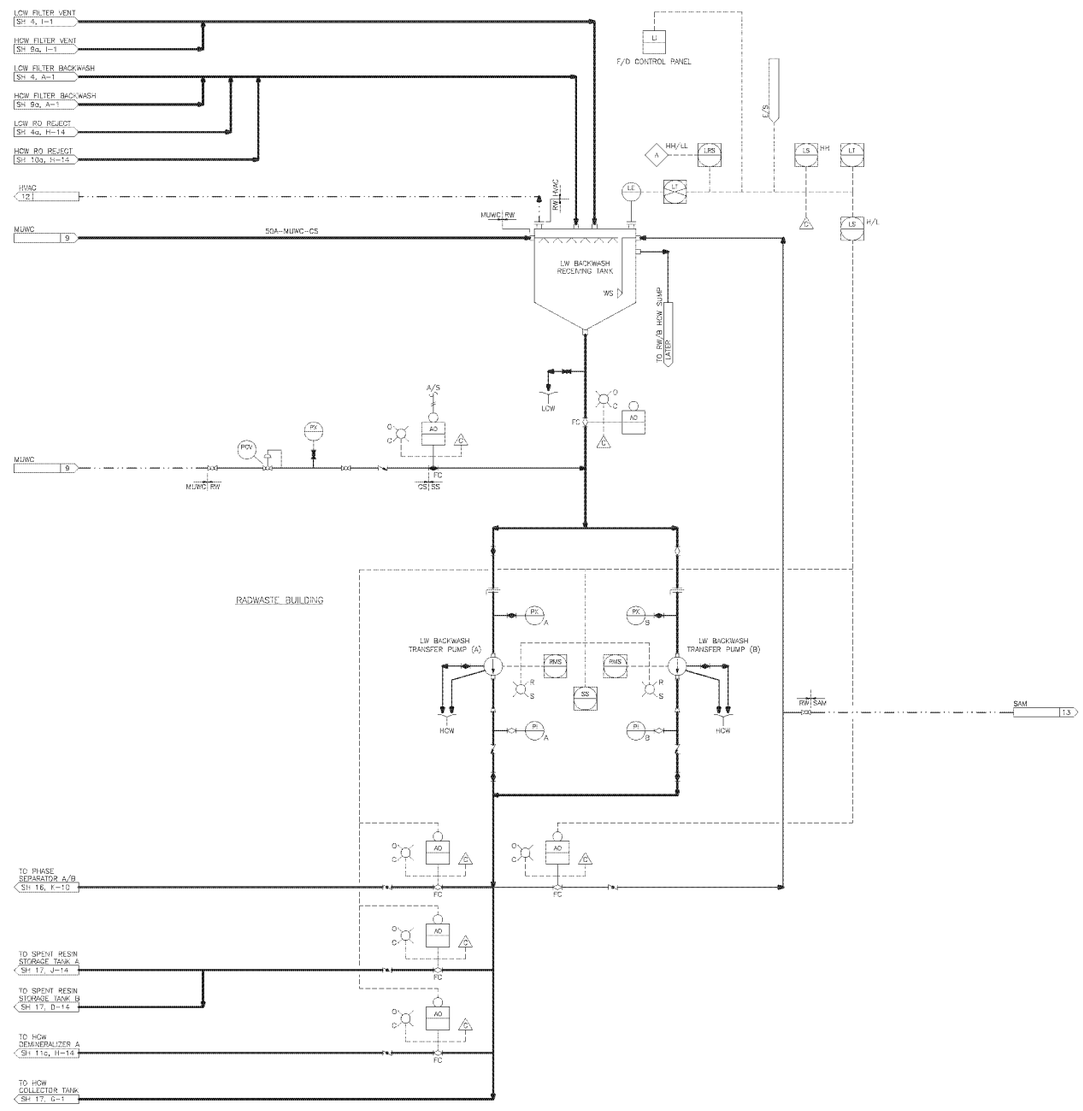

FIGURE 11.2-2 RADWASTE SYSTEM (SHEET 15a OF 36)

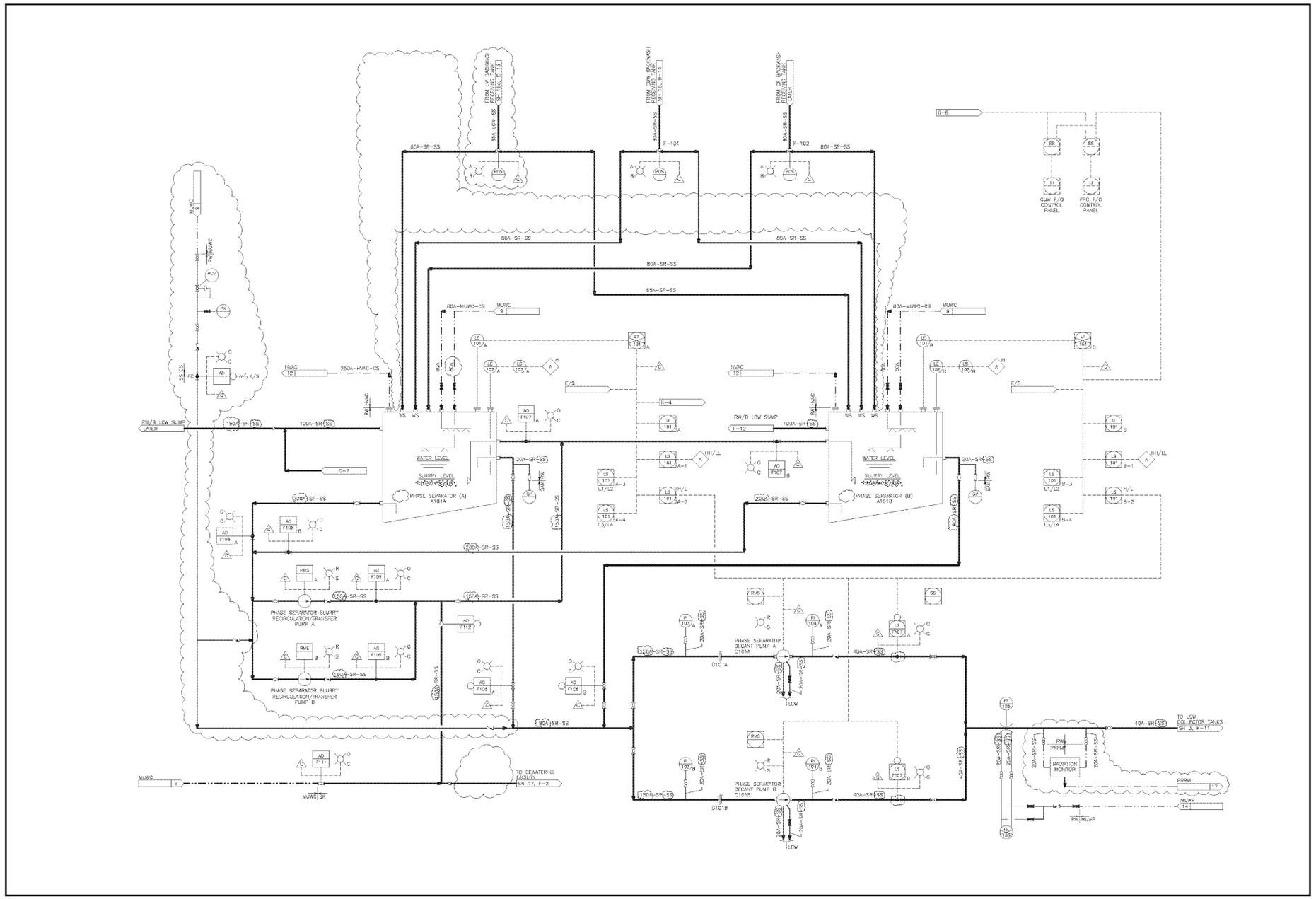

FIGURE 11.2-2 RADWASTE SYSTEM (SHEET 16 OF 36)

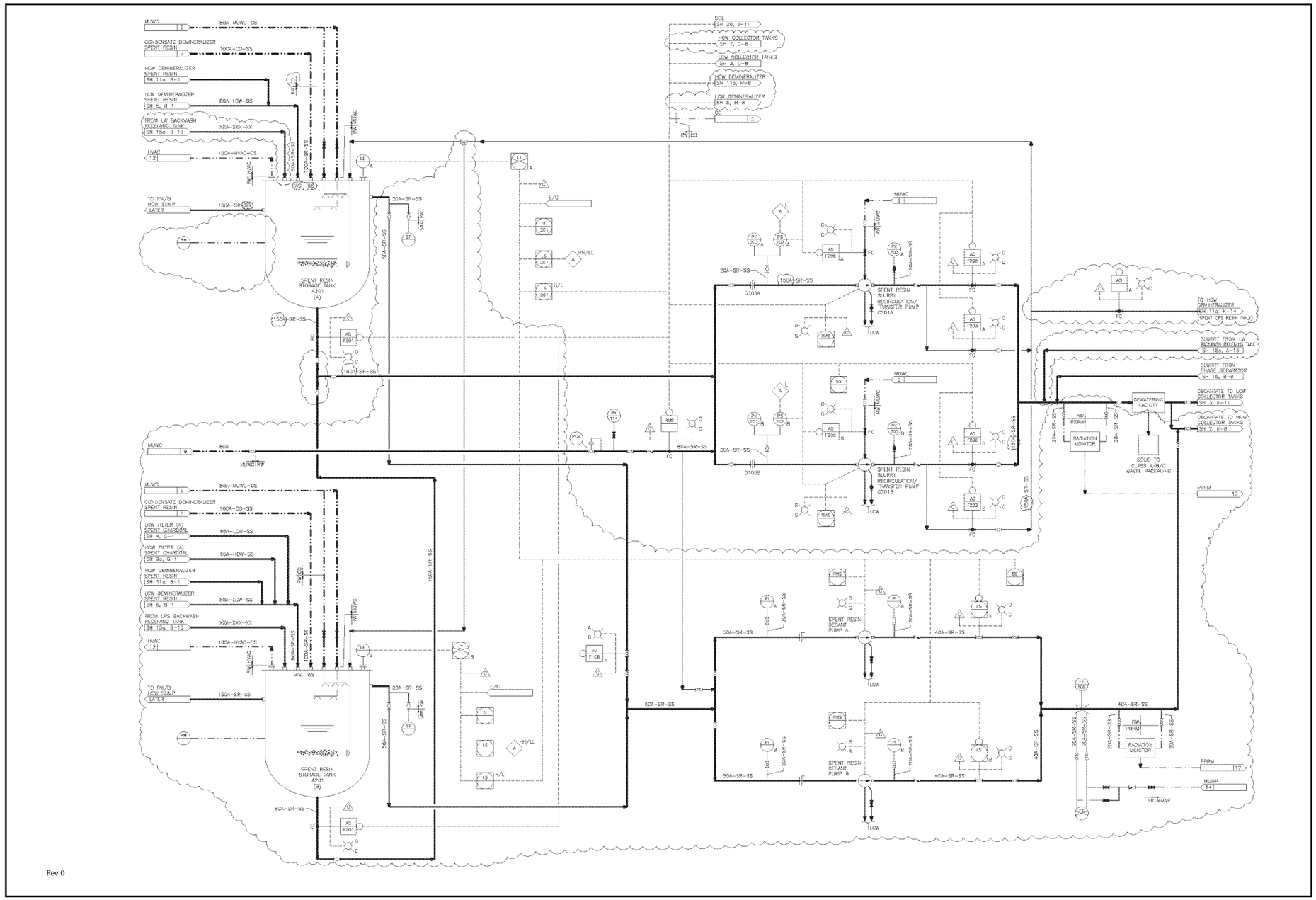

Rev 0

FIGURE 11.2-2 RADWASTE SYSTEM (SHEET 17 OF 36)

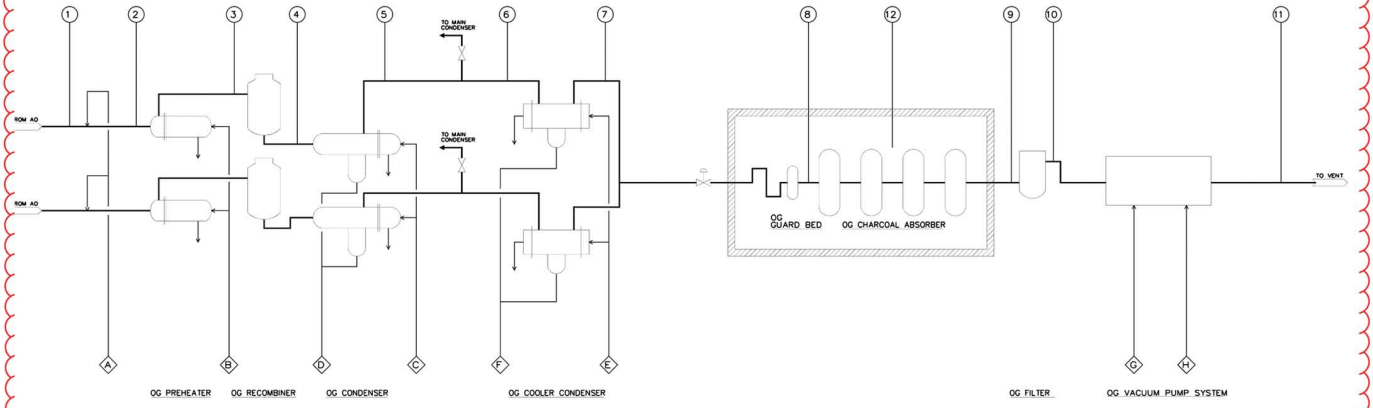

NORMAL OPERATION (DESIGN FLOW RATE)

CONTENTS	UNIT	1	2	3	4	5	6	7	8	9	10	11	12
TEMPERATURE	℃	105~148	105~148	150	~379	55	55	10	22~32	10~40	10~40	10~40	23~31
PRESSURE(MAX)	MPa [gage]	2.41~-0.101	2.41~-0.101	2.41~-0.101	2.41~-0.101	2.41~-0.101	2.41~-0.101	2.41~-0.101	2.41~-0.101	2.41~-0.101	2.41~-0.101	(0~)	~0
FLOW RATE	m^3/h [normal]	7895	7895	7895	7764	57.1	57.1	48.8	48.8	48.8	48.8	52	
HYDROGEN	m^3/h [normal]	262	262	262	(~0.01)	(~0.01)	(~0.01)	(~0.01)	(~0.01)	(~0.01)	(~0.01)	(~0.01)	
OXYGEN	m^3/h [normal]	131	131	131	(~0.005)	(~0.005)	(~0.005)	(~0.005)	(~0.005)	(~0.005)	(~0.005)	(~0.005)	
AIR	m^3/h [normal]	48.2	48.2	48.2	48.2	48.2	48.2	48.2	48.2	48.2	48.2	48.2	
STEAM	m^3/h [normal]	7454	7454	7454	7716	(8.9)	(8.9)	(0.6)	(0.6)	(0.6)	(0.6)	(3.8)	

NORMAL OPERATION (MINIMUM AIR FLOW RATE)

CONTENTS	UNIT	1	2	3	4	5	6	7	8	9	10	11	12
TEMPERATURE	℃	105~148	105~148	150	~381	55	55	10	22~32	10~40	10~40	10~40	23~31
PRESSURE(MAX)	MPa [gage]	2.41~-0.101	2.41~-0.101	2.41~-0.101	2.41~-0.101	2.41~-0.101	2.41~-0.101	2.41~-0.101	2.41~-0.101	2.41~-0.101	2.41~-0.101	(0~)	~0
FLOW RATE	m^3/h [normal]	7857	7857	7857	7726	11.8	11.8	10.1	10.1	10.1	10.1	10.8	
HYDROGEN	m^3/h [normal]	262	262	262	(~0.01)	(~0.01)	(~0.01)	(~0.01)	(~0.01)	(~0.01)	(~0.01)	(~0.01)	
OXYGEN	m^3/h [normal]	131	131	131	(~0.005)	(~0.005)	(~0.005)	(~0.005)	(~0.005)	(~0.005)	(~0.005)	(~0.005)	
AIR	m^3/h [normal]	10	10	10	10	10	10	10	10	10	10	10	
STEAM	m^3/h [normal]	7454	7454	7454	7716	(1.8)	(1.8)	(0.1)	(0.1)	(0.1)	(0.1)	(0.8)	

UTILITY (NORMAL OPERATION)

CONTENTS	UNIT	A	B	C	D	E	F	G	H
FLUID	–	AIR	STEAM	W	W	W	W	W	W
SYSTEM	–	IA	HS	TCW	---	HNCW	---	TCW	MUWP
TEMPERATURE	℃	---	166	41	---	7~12	---	41	---
PRESSURE	MPa [gage]	0.69 ~0.87	0.62	MAX1.37	(0.35~-0.101)	MAX1.37	(0.35~-0.101)	MAX1.37	MAX 1.37
FLOW RATE	–	3.7~48.2 Nm³/h	355 kg/h/unit	MIN 370 m³/h/unit	6.19 ton/h	5.3 m³/h/unit	6.7kg/h	MIN 7 m³/h/unit	0.15 m³/h

Figure 11.3-1 Offgas System PFD (Sheet 1)
STP 3&4 Rev. 2

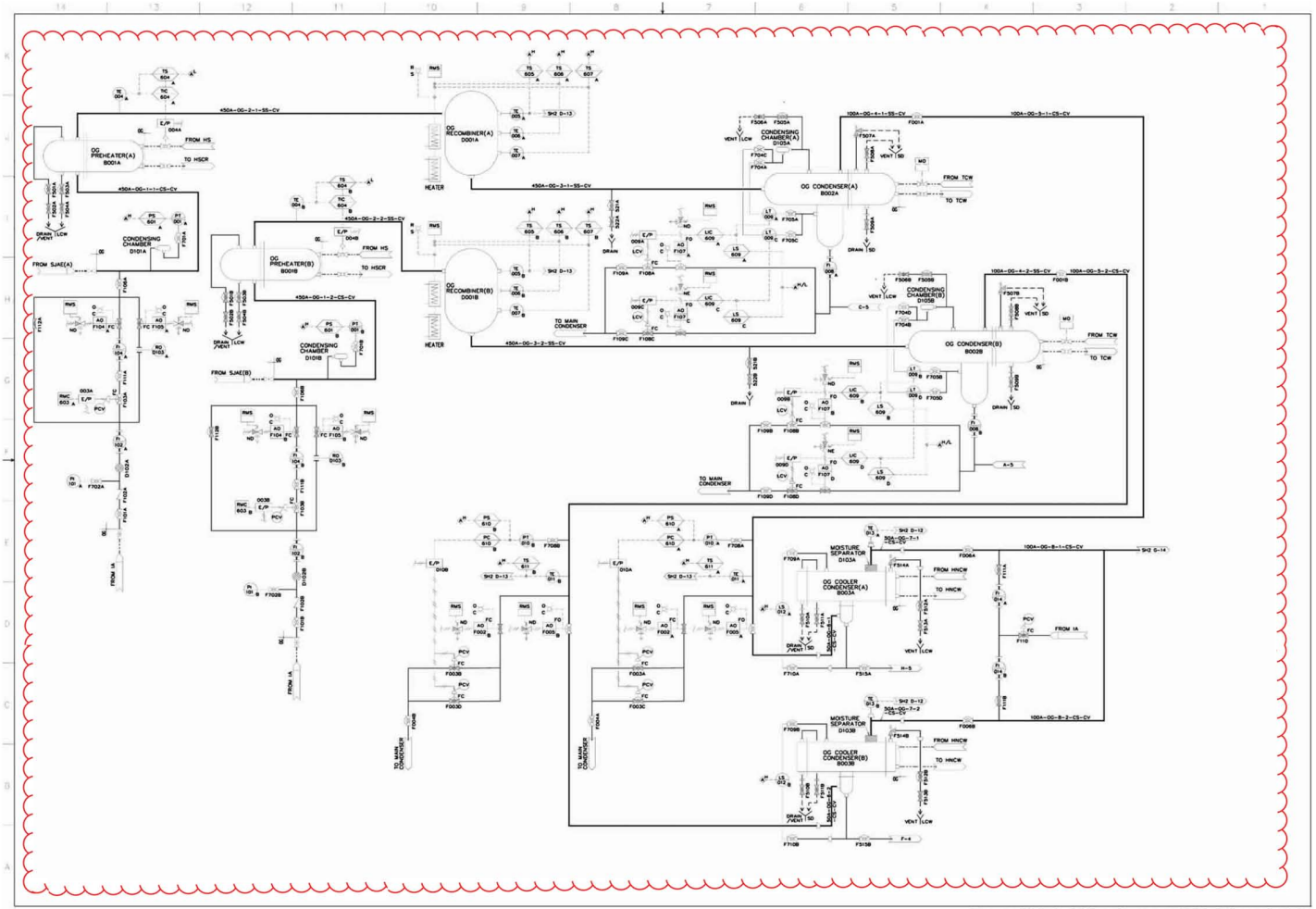

Figure 11.3-2 Offgas System P&ID (Sheet 1 of 3)
STP 3&4 Rev. 2

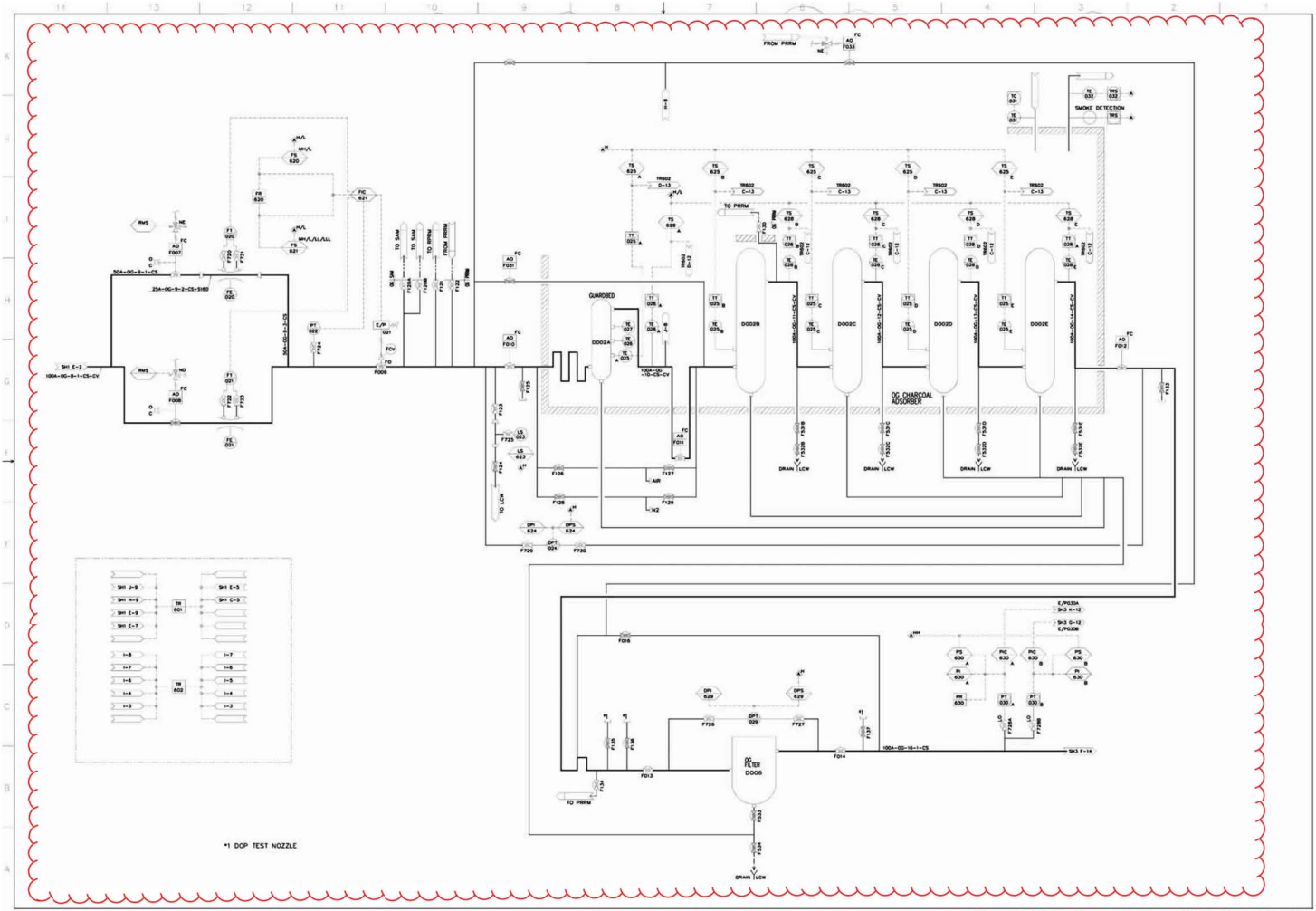

Figure 11.3-2 Offgas System P&ID (Sheet 2 of 3)
STP 3&4 Rev. 2

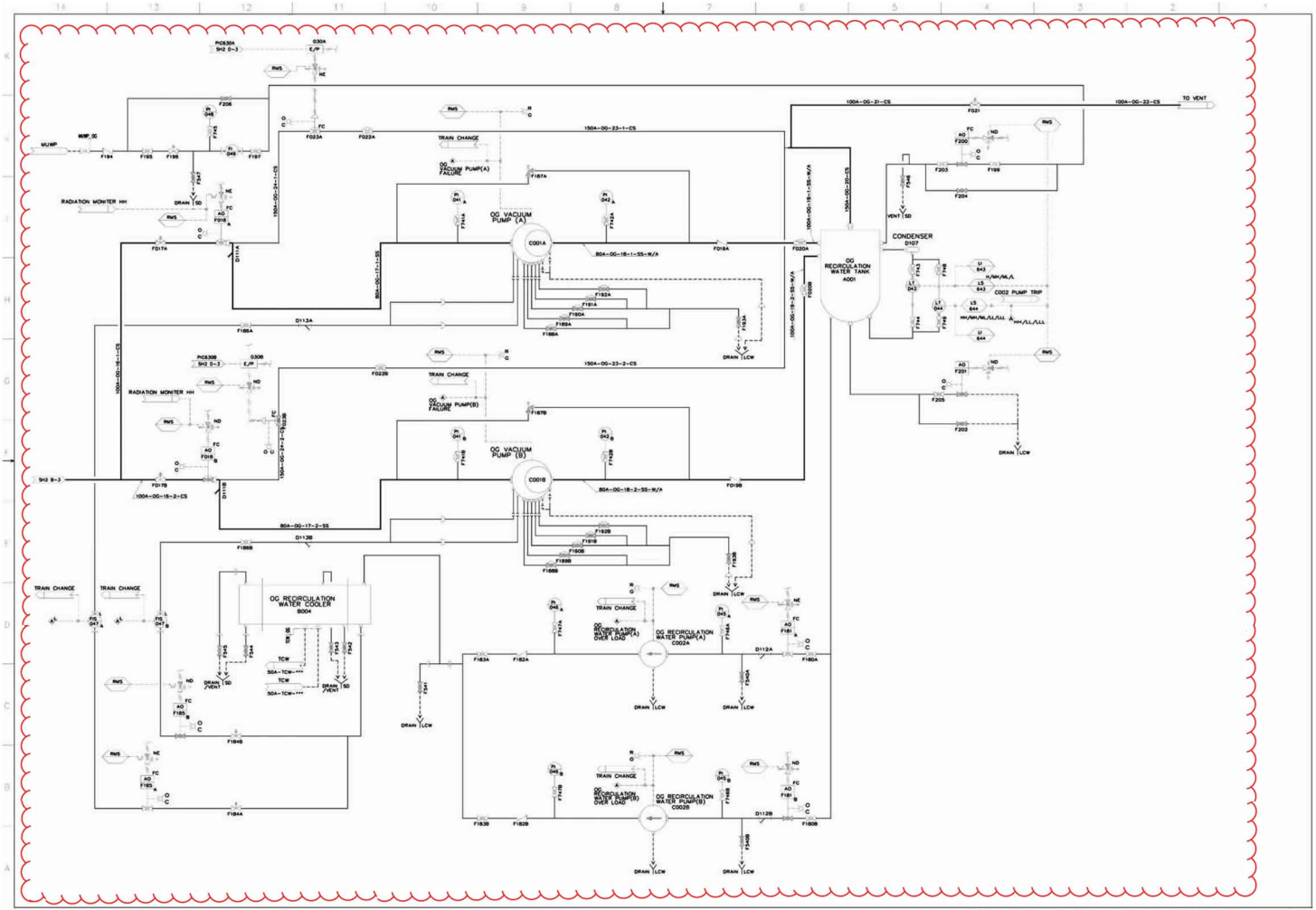

Figure 11.3-2 Offgas System P&ID (Sheet 3 of 3)
STP 3&4 Rev. 2

NOT FOR PUBLIC RELEASE

Figure 12.3-1 REACTOR BUILDING RADIATION ZONE MAP FOR FULL POWER AND SHUTDOWN OPERATION AT ELEVATION −8200 mm

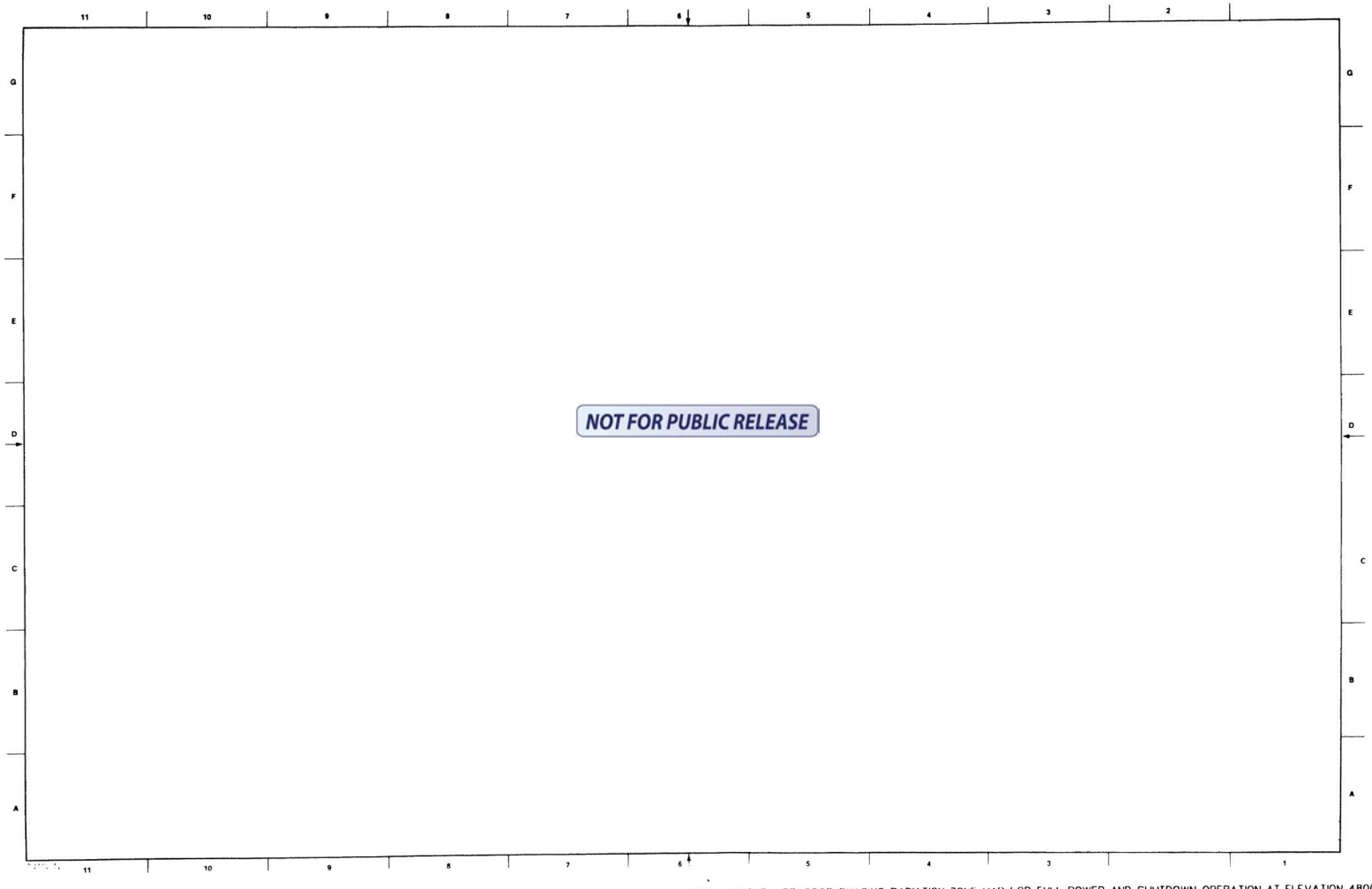

Figure 12.3-3 REACTOR BUILDING RADIATION ZONE MAP FOR FULL POWER AND SHUTDOWN OPERATION AT ELEVATION 4800/8500 mm

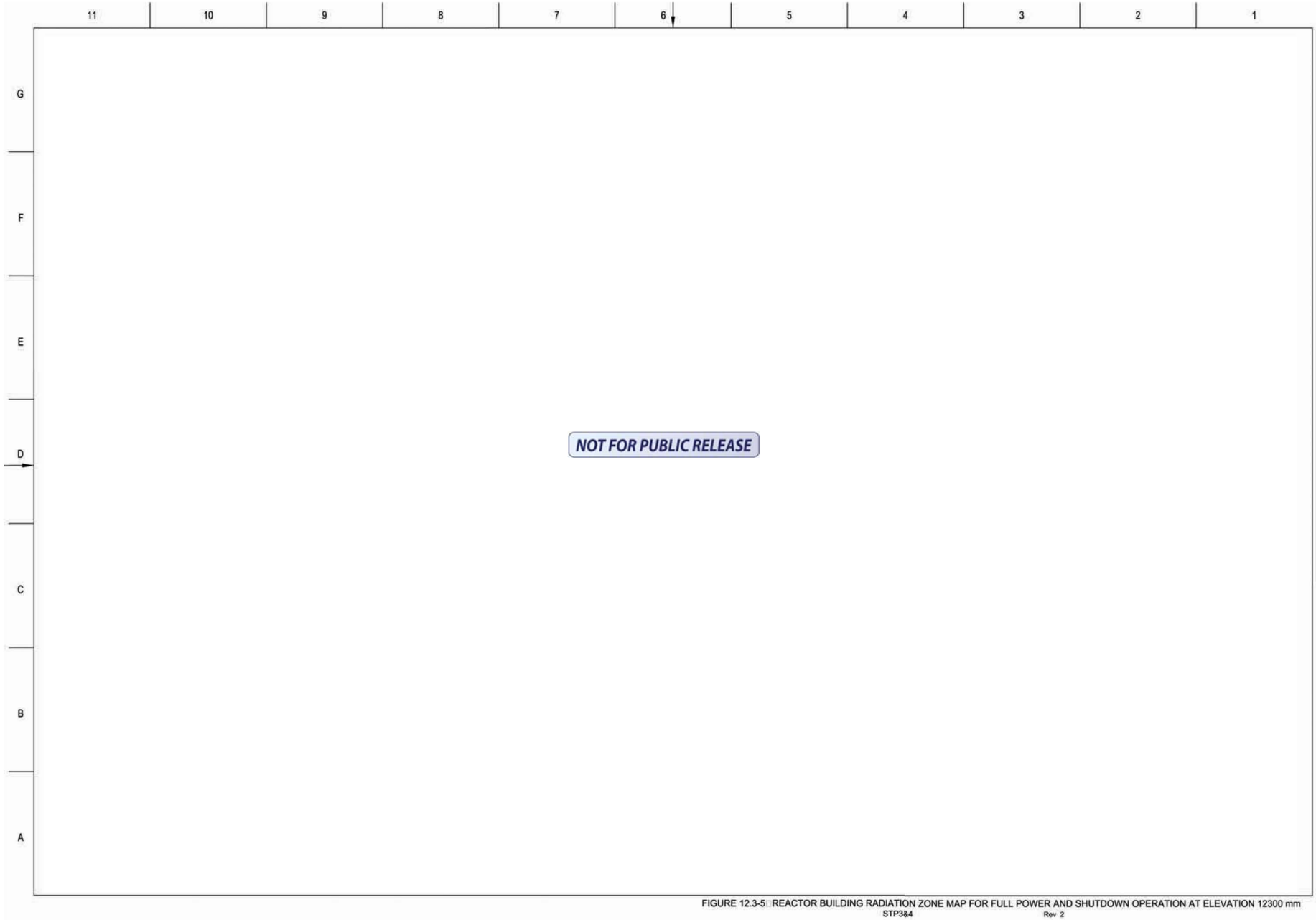

FIGURE 12.3-5 REACTOR BUILDING RADIATION ZONE MAP FOR FULL POWER AND SHUTDOWN OPERATION AT ELEVATION 12300 mm

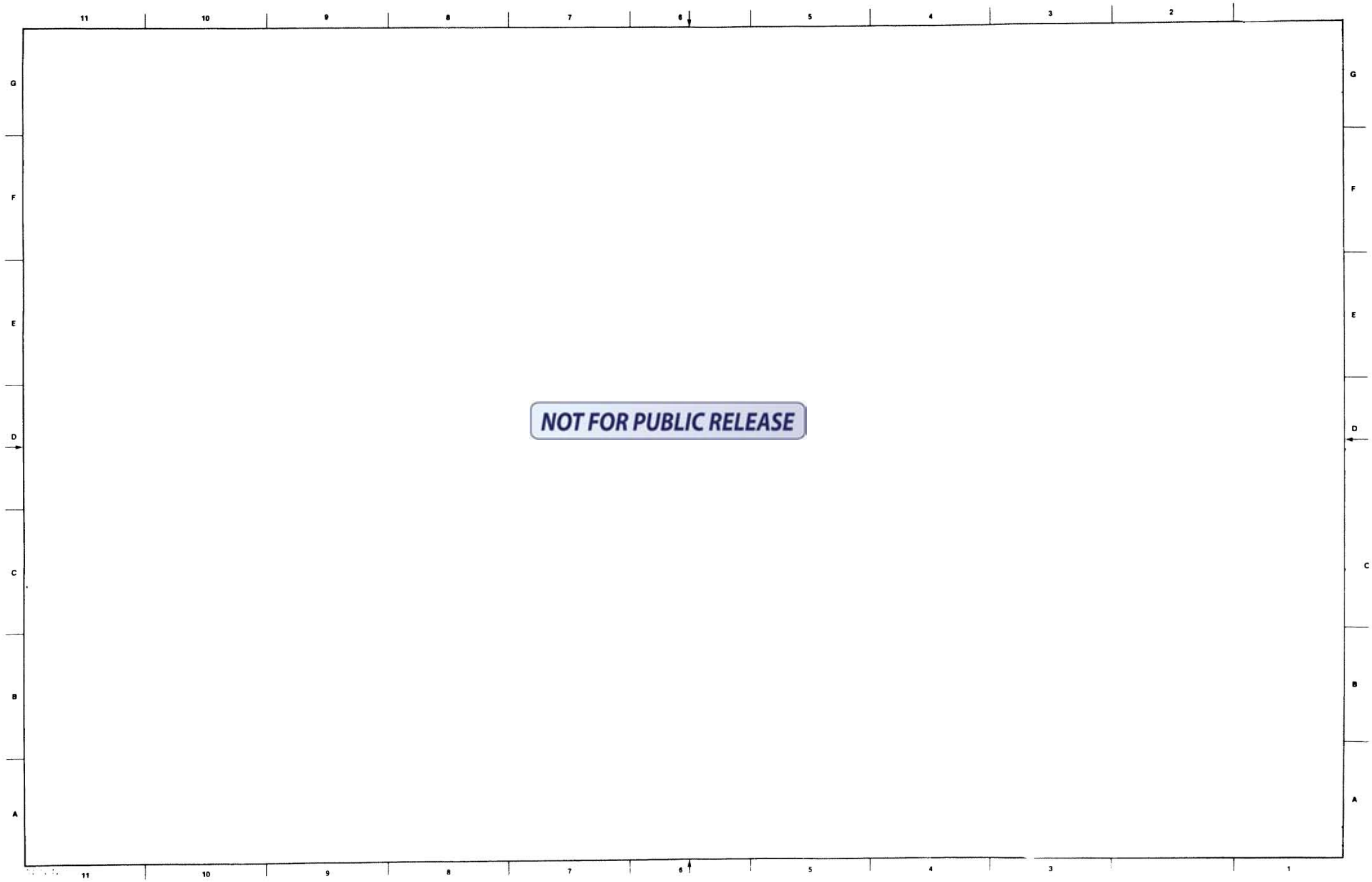

Figure 12.3-16 REACTOR BUILDING RADIATION ZONE MAP FOR FULL POWER AND SHUTDOWN OPERATION AT ELEVATION 18100 mm

NOT FOR PUBLIC RELEASE

FIGURE 12.3-10 REACTOR BUILDING RADIATION ZONE MAP FOR FULL POWER AND SHUTDOWN OPERATION, SECTION A-A

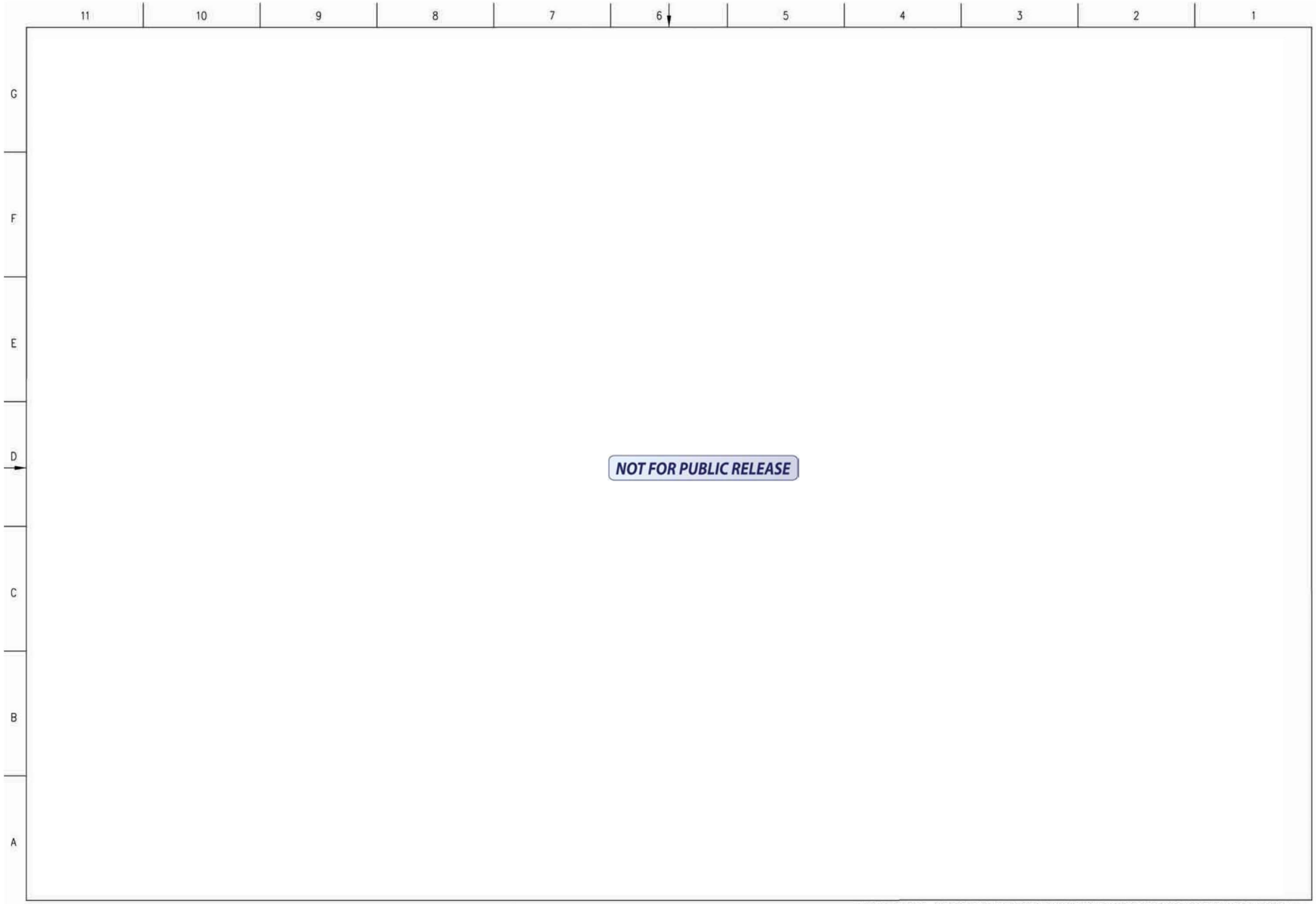

FIGURE 12.3-16 REACTOR BUILDING RADIATION ZONE MAP POST LOCA AT ELEVATION 12300 mm

NOT FOR PUBLIC RELEASE

FIGURE 12.3-21 REACTOR BUILDING RADIATION ZONE MAP POST LOCA. SECTION A-A

STP 3&4 Rev.2

NOT FOR PUBLIC RELEASE

FIGURE 12.3-37 RADWASTE BUILDING, RADIATION ZONE MAP, NORMAL OPERATION AT ELEVATION - 1700 MM

NOT FOR PUBLIC RELEASE

Figure 12.3-38 Radwaste Building, Radiation Zone Map, Normal Operation at Elevation - 5300 mm

NOT FOR PUBLIC RELEASE

Figure 12.3-39 Radwaste Building, Radiation Zone Map, Normal Operation at Elevation - 12300 mm

NOT FOR PUBLIC RELEASE

Figure 12.3-40 Radwaste Building, Radiation Zone Map, Normal Operation at Elevation - 18300 mm

NOT FOR PUBLIC RELEASE

FIGURE 12.3-41 RADWASTE BUILDING, RADIATION ZONE MAP, NORMAL OPERATION AT CROSS SECTION A-A

NOT FOR PUBLIC RELEASE

Figure 12.3-49 Turbine Building, Radiation Zone Map, at Elevation 2300 mm

NOT FOR PUBLIC RELEASE

Figure 12.3-50 Turbine Building, Radiation Zone Map, at Elevation 6300 mm

NOT FOR PUBLIC RELEASE

Figure 12.3-51 Turbine Building, Radiation Zone Map, at Elevation 12300 mm

NOT FOR PUBLIC RELEASE

Figure 12.3-52 Turbine Building, Radiation Zone Map, at Elevation 19700 mm

NOT FOR PUBLIC RELEASE

Figure 12.3-53 Turbine Building, Radiation Zone Map, at Elevation 27800 mm

NOT FOR PUBLIC RELEASE

Figure 12.3-55 Turbine Building, Radiation Zone Map, Post LOCA, Longitudinal Section B-B
STP3&4 REV.2

NOT FOR PUBLIC RELEASE

FIGURE 12.3-56 REACTOR BUILDING, AREA RADIATION MONITORS, -8200 mm

NOT FOR PUBLIC RELEASE

FIGURE 12.3-57 REACTOR BUILDING, AREA RADIATION MONITORS, -1700 mm and 1500 mm

NOT FOR PUBLIC RELEASE

FIGURE 12.3-58 REACTOR BUILDING, AREA RADIATION MONITORS, 4800 mm

NOT FOR PUBLIC RELEASE

FIGURE 12.3-60 REACTOR BUILDING, AREA RADIATION MONITORS, 23500 mm

NOT FOR PUBLIC RELEASE

FIGURE 12.3-62 REACTOR BUILDING, AREA RADIATION MONITORS, 31700 mm

NOT FOR PUBLIC RELEASE

Figure 12.3-66 Radwaste Building, Area Radiation Monitors at Elevation 5300 mm

NOT FOR PUBLIC RELEASE

Figure 12.3-67 Radwaste Building, Area Radiation Monitors at Elevation 12300 mm

NOT FOR PUBLIC RELEASE

Figure 12.3-68 Turbine Building B1F Floor Level, Area Radiation Monitors, Elevation 2300 mm

NOT FOR PUBLIC RELEASE

Figure 12.3-69 Turbine Building MB1F Floor Level, Area Radiation Monitors, Elevation 6300 mm

NOT FOR PUBLIC RELEASE

Figure 12.3-70 Turbine Building 1F Floor Level, Area Radiation Monitors, Elevation 12300 mm

NOT FOR PUBLIC RELEASE

Figure 12.3-71 Turbine Building 2F Floor Level, Area Radiation Monitors, Elevation 19700 mm

NOT FOR PUBLIC RELEASE

Figure 12.3-72 Turbine Building 3F Floor Level, Area Radiation Monitors, Elevation 27800 mm

NOT FOR PUBLIC RELEASE

Figure 12.3-73 Turbine Building, Area Radiation Monitors, Longtidual Section B-B

NOT FOR PUBLIC RELEASE

Figure 12.3-75 Turbine Building, Radiation Zone Map, at Elevation 38300 mm
STP3&4 REV.2

NOT FOR PUBLIC RELEASE

Figure 12.3-76 Turbine Building, Radiation Zone Map, at Elevation 47200 mm
STP3&4 REV.2

NOT FOR PUBLIC RELEASE

Figure 12.3-77 Turbine Building, Radiation Zone Map, at Longitudinal Section B-B
STP3&4 REV.2