TABLE 1 LPRM TO APRM ASSIGNMENTS

DET AND LPRM LOCATION	APRM CHANNEL A	B	C	D	UNIT NO.
20-61	B	C	D	A	1
28-61	C	D	A	B	2
36-61	B	C	D	A	3
44-61	C	D	A	B	4
52-61	B	C	D	A	1
12-53	D	A	B	C	1
20-53	A	B	C	D	4
28-53	D	A	B	C	3
36-53	A	B	C	D	2
44-53	D	A	B	C	1
52-53	A	B	C	D	4
60-53	D	A	B	C	3
04-45	B	C	D	A	4
12-45	C	D	A	B	3
20-45	B	C	D	A	2
28-45	C	D	A	B	1
36-45	B	C	D	A	4
44-45	C	D	A	B	3
52-45	B	C	D	A	2
60-45	C	D	A	B	1
04-37	A	B	C	D	2
12-37	D	A	B	C	2
20-37	A	B	C	D	3
28-37	D	A	B	C	4
36-37	A	B	C	D	1
44-37	D	A	B	C	2
52-37	A	B	C	D	3
60-37	D	A	B	C	4
04-29	B	C	D	A	3
12-29	C	D	A	B	4
20-29	B	C	D	A	1
28-29	C	D	A	B	2
36-29	B	C	D	A	3
44-29	C	D	A	B	4
52-29	B	C	D	A	1
60-29	C	D	A	B	2

TABLE 1 LPRM TO APRM ASSIGNMENTS (CONT'D)

DET AND LPRM LOCATION	APRM CHANNEL A	B	C	D	UNIT NO.
12-21	D	A	B	C	1
20-21	A	B	C	D	4
28-21	D	A	B	C	3
36-21	A	B	C	D	2
44-21	D	A	B	C	1
52-21	A	B	C	D	4
60-21	D	A	B	C	3
12-13	C	D	A	B	3
20-13	B	C	D	A	2
28-13	C	D	A	B	1
36-13	B	C	D	A	4
44-13	C	D	A	B	3
52-13	B	C	D	A	2
28-05	D	A	B	C	4
36-05	A	B	C	D	1
44-05	D	A	B	C	2

(NOTE 9)

TABLE 2 LPRM STRING ASSIGNMENT TO ATIP MACHINES

ATIP A		ATIP B		ATIP C	
POSITION #	LPRM LOC.	POSITION #	LPRM LOC.	POSITION #	LPRM LOC.
1	04-29	1	28-05	1	44-13
2	04-37	2	28-13	2	44-21
3	04-45	3	28-21	3	44-29
4	12-13	4	28-29	4	44-37
5	12-21	5	28-37	5	44-45
6	12-29	6	28-45	6	44-53
7	12-37	7	28-53	7	44-61
8	12-45	8	28-61	8	52-13
9	12-53	9	36-05	9	52-21
10	20-13	10	36-13	10	52-29
11	20-21	11	36-21	11	52-37
12	20-29	12	36-29	12	52-45
13	20-37	13	36-45	13	52-53
14	20-45	14	36-53	14	52-61
15	20-53	15	36-61	15	60-21
16	20-61	16	44-05	16	60-29
17	-	17	-	17	60-37
18	-	18	-	18	60-45
19	-	19	-	19	60-53
20	36-37	20	36-37	20	36-37

TABLE 3 POWER DISTRIBUTION

	120V AC DIVISIONAL UPS BUS			
	A	B	C	D
DIVISION	I	II	III	IV
SRNM CH'S	A,E,J	B,F	C,G,L	D,H
APRM CH'S	A	B	C	D
	120V AC NON-DIVISIONAL UPS			
	A	B	C	D
MRBM CH'S	A	B		
SRNM RECORDERS	A,E,J	B,F	C,G,L	D,H
APRM RECORDERS	A	B	C	D
MRBM RECORDERS	A	B	A	B
480V, 3ø 3kVA:	ATIP DRIVE MECHANISMS			
120V AC:	ATIP INSTR. PANEL			

LEGEND:

- ○ – LPRM DETECTOR ASM (52)
- + – CONTROL RODS (205)
- □ – SRNM DETECTORS (10)
- △ – NEUTRON SOURCES (5)
- [I] – SIGNAL ISOLATION
- ⚠C – COMPUTER INPUTS
- ⚠1 – TRANSIENT TEST PANEL INPUTS
- ⇒ DATA TRANSMISSION [VIA OPTIC FIBER]
- —▸ – SINGLE TRANSMISSION

SUPPLEMENTAL DOCUMENTS UNDER THE FOLLOWING IDENTITIES ARE TO BE USED IN CONJUNCTION WITH THIS DRAWING:

	MPL NO.
1. RECIRCULATION FLOW CONTROL SYS. IED	C81-1040
2. PMCS INPUT/OUTPUT LIST	C90-1080
3. PIPING AND INSTRUMENT SYMBOLS DIAGRAM	A10-3030
4. REACTOR PROTECTION SYS. IED	C71-1040
5. ROD CONTROL AND DEFORMATION SYS. IED	C11-1040
6. PMCS IED	C90-1040
7. MCRP SYSTEM IED	H11-1040
8. AUTOMATIC POWER REGULATOR SYS. IED	C62-1040
9. NEUTRON MONITORING SYSTEM IED	C51-1030
10. NEUTRON MONITORING SYS ARRGM'T	C51-1070

ABBREVIATIONS:

RPS --- REACTOR PROTECTION SYSTEM
SRNM --- STARTUP RANGE NEUTRON MONITOR
LPRM --- LOCAL POWER RANGE MONITOR
APRM --- AVERAGE POWER RANGE MONITOR
ATIP --- AUTOMATED TRAVERSING INCORE PROBE
MRBM --- MULTI-CHANNEL ROD BLOCK MONITOR
UPS --- UNINTERRUPTABLE POWER SUPPLY
NMS --- NEUTRON MONITORING SYSTEM
RC&IS --- ROD CONTROL AND INFORMATION SYSTEM
MCRP --- MAIN CONTROL ROON PANEL
PMCS --- PERFORMANCE MONITORING CONTROL SYSTEM
APRS --- AUTOMATIC POWER REGULATOR SYSTEM
MSV --- MEAN SQUARE VOLTAGE
ATLM --- AUTOMATED THERMAL LIMIT MONITOR
OPRM --- OSCILLATION POWER RANGE MONITOR
RTIS --- REACTOR TRIP AND ISOLATION SYSTEM

NOTES:

1. THIS DOCUMENT PRESENTS THE BASIC REQUIREMENTS OF FUNCTIONAL UNITS ALLOCATION OF THE NMS INSTRUMENTS. THEIR BASIC FUNCTIONS AND THEIR INPUT AND OUTPUT REQUIREMENTS TO OTHER SYSTEMS. IT ALSO INCLUDES REQUIREMENTS OF DETECTOR LOCATION ASSIGNMENTS IN CORE AS WELL AS THEIR ASSIGNMENTS TO DIFFERENT DIVISIONS.
2. ALL EQUIPMENTS, INTRUMENTS AND DISPLAY CONTROL SYSTEM INPUT SIGNALS ARE PREFIXED BY C51- UNLESS OTHERWISE NOTED. THE PART MEMBERS ARE LOCATED ADJACENT TO OR ON THE SIGNAL CONDITIONING EQUIPMENT PERFORMING THE FUNCTION INDICATED.
3. AN AREA RADIATION MONITOR IS RECOMMENDED TO BE INSTALLED IN THE TIP DRIVE MECHANISM ROOM, AND THE OUTSIDE OF THE PERSONNEL HATCH DOOR (TO THE DRYWELL).
4. REMOTE DISPLAY MEANS DISPLAY ON MAIN CONTROL PANEL. FOR DISPLAY DEVICE TYPE, REFER TO C51-5030.
5. REMOTE RECORDING DEVICE SHALL BE BASED ONT THAT SPECIFIED IN H11-4010
6. SRNM NON-COINCIDENT UPSCALE LEVEL TRIP IS ONLY ACTIVATED BY MANUAL SWITCH IN UPS.
7. THESE ARE SAFETY RELATED CORE PLATE DIFFERENTIAL PRESSURE (C81-DPT301A-D) SIGNALS OF THE RFCS ESSENTIAL CORE PLATE DIFFERENTIAL PRESSURE SIGNALS.
8. COMMAND AND CONTROL SIGNALS BETWEEN THE PLANT COMPUTER FUNCTIONS AND THE ATIP OTHER THAN ATIP MEASURED DATA ARE TRANSMITTED THROUGH THIS DATA ENTRY POINT.
9. DETECTORS SIGNALS ARE DISTRIBUTED TO FOUR UNITS, IN EACH DIVISION ACCORDING TO TABLE 1 ARRANGEMENT. THE UNIT ASSIGNMENT ONLY DEPENDS ON LPRM STRING LOCATION AND ARE IDENTICAL FOR ALL FOUR DIVISIONS.
10. THE DATA COMMUNICATIO FUNCTION (DCF) REFERS TO THE INPUT/OUTPUT FUNCTION OF THE SRNM AND THE APRM. THIS IED DOES NOT SPECIFY THE ACTUAL HARDWARE IMPLEMENTATION OF THIS DCF.
11. FOR DETAIL TRIP SIGNAL FUNCTIONAL INTERFACES WITH RCIS & RPS, REFER TO SUPPL. DOC. 9. THERE SHOULD BE A SEPARATE RCIS AND RPS TRIP LOGIC FUNCTION INDEPENDENT OF EACH INDIVIDUAL SRNM CHANNEL IN THE DIVISION. THE RTIS INTERLOCK SIGNAL IS THE "ATWS PERMISSIVE" SIGNAL.
12. THIS IED INCLUDES ALL MAIN INPUT/OUTPUT SIGNALS REQUIRED TO BE INLUDED IN THE INSTRUMENT DESIGN. FOR DETAIL BINARY TRIP SIGNALS, REFER TO NMS IBD. SUPPLEMENTAL DOCUMENT 9.
13. THE SIGNAL TRANSMISSION PATH CAN BE THROUGH DEDICATED CONDUCTORS.
14. TRIP SIGNAL FROM THE NMS TO THE PMCS SHALL BE TRANSMITTED VIA DEDICATED CONDUCTORS (E.G. METAL CABLE WITH PROPER ISOLATION) TO AVOID UNNECESSARY TIME DELAY FOR TRIP SEQUENCE RECORDING.
15. THE OPRM IS A FUNCTIONAL SUBSYSTEM OF THE APRM. IT RECEIVES THE SAME LPRM SIGNALS, THE APRM OF THE SAME DIVISION RECEIVES AS INPUT, AS SHOWN IN TABLE 1. THE OPRM LOGIC IS DISCRIBED IN SUPPL. DOC. 9.

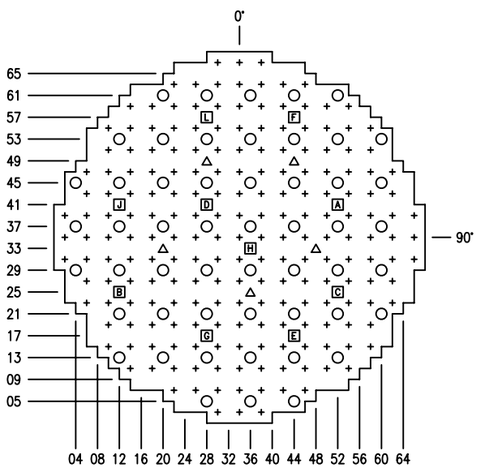

FIGURE 1: DETECTOR AND CONTROL ELEMENT ARRANGEMENT [TOP VIEW OF CORE]

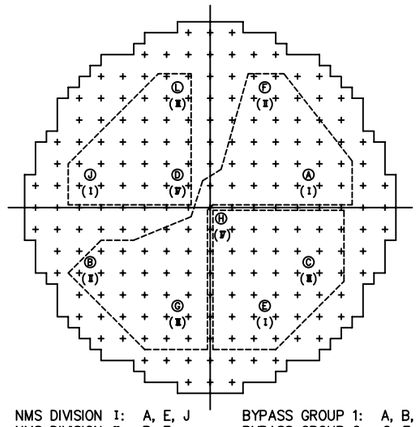

NMS DIVISION I: A, E, J
NMS DIVISION II: B, F
NMS DIVISION III: C, G, L
NMS DIVISION IV: D, H

BYPASS GROUP 1: A, B, F, G
BYPASS GROUP 2: C, E, H
BYPASS GROUP 3: D, J, L

BYPASS SWITCHES

FIGURE 2: SRNM DIVISION & BYPASS GROUP ASSIGNMENTS

MPL NO. C31-1040

FIGURE 7.6-1 NEUTRON MONITORING SYSTEM IED (SHEET 1 OF 4)
STP 3&4 Rev.2

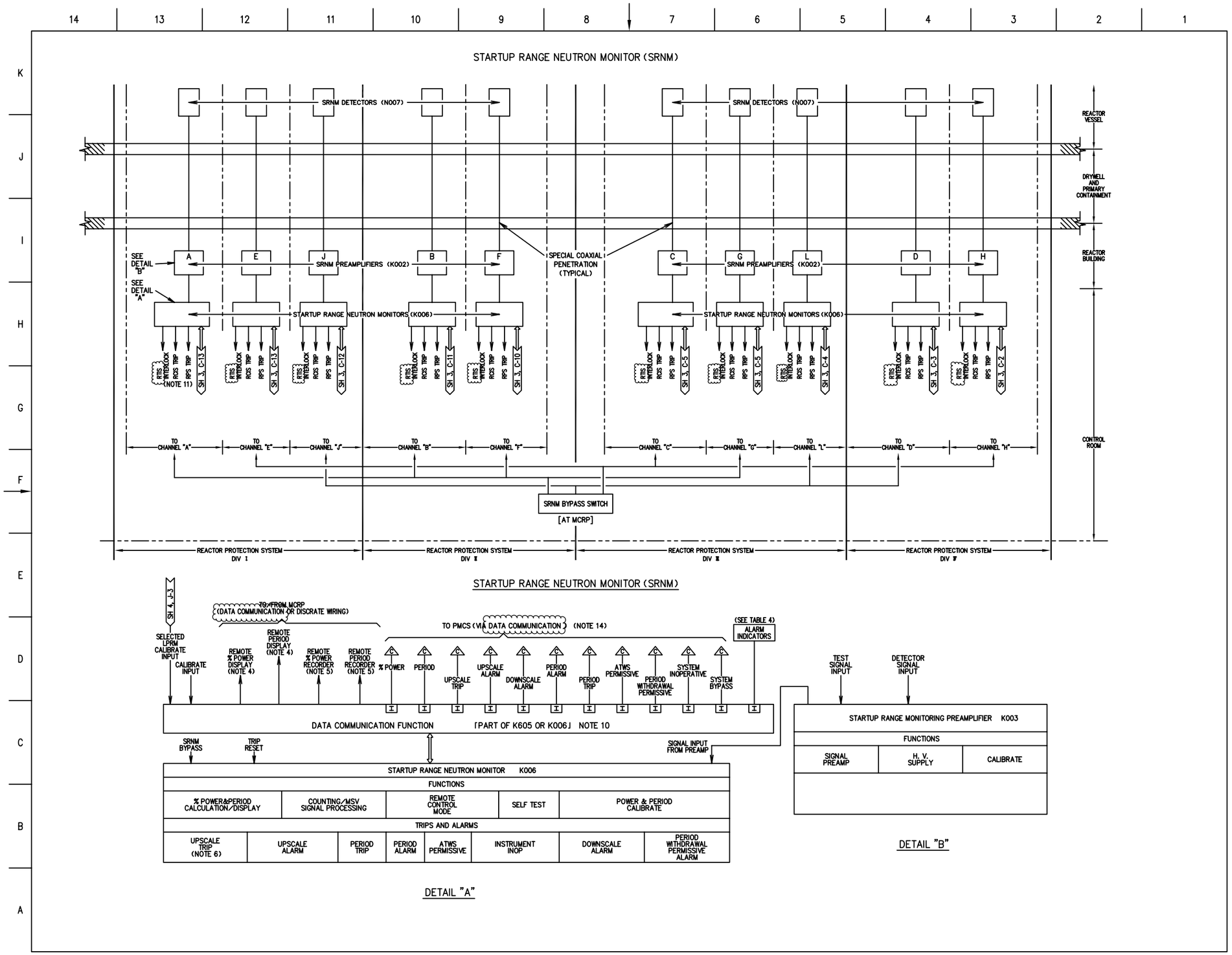

FIGURE 7.6-1 NEUTRON MONITORING SYSTEM IED (SHEET 2 OF 4)
STP 3&4 Rev.2

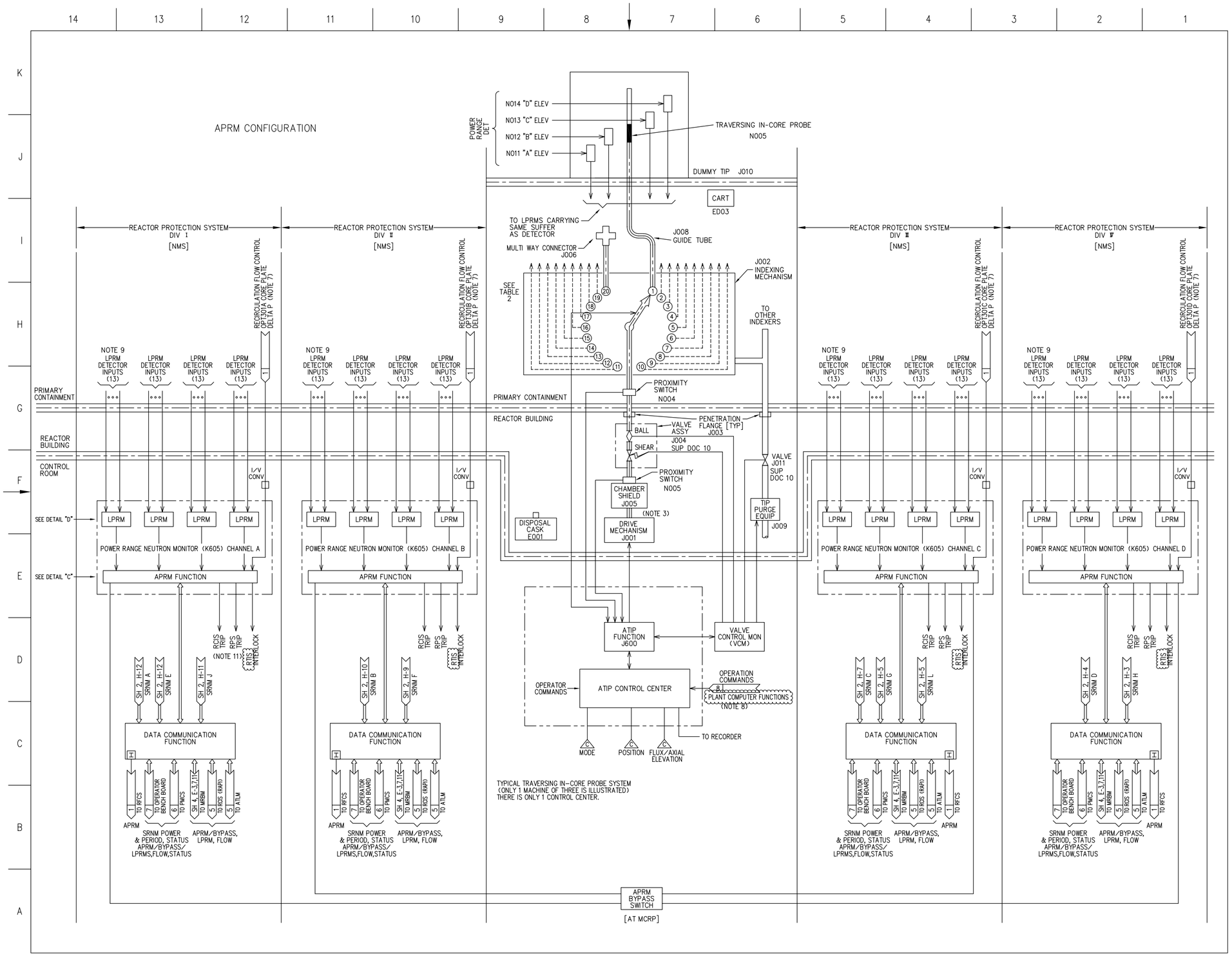

FIGURE 7.6-1 NEUTRON MONITORING SYSTEM IED (SHEET 3 OF 4)

STP 3&4 Rev.2

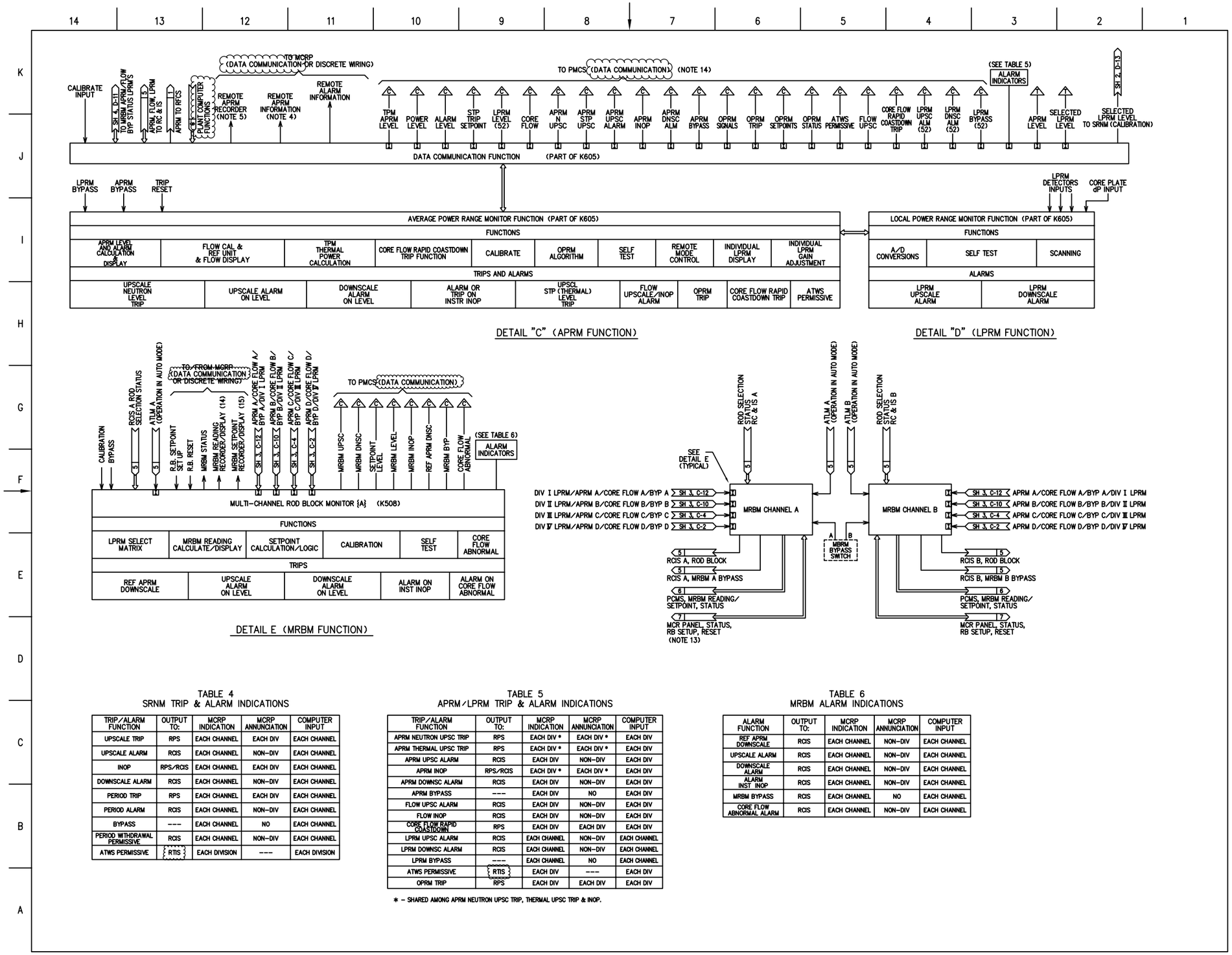

TABLE 4
SRNM TRIP & ALARM INDICATIONS

TRIP/ALARM FUNCTION	OUTPUT TO:	MCRP INDICATION	MCRP ANNUNCIATION	COMPUTER INPUT
UPSCALE TRIP	RPS	EACH CHANNEL	EACH DIV	EACH CHANNEL
UPSCALE ALARM	RCIS	EACH CHANNEL	NON-DIV	EACH CHANNEL
INOP	RPS/RCIS	EACH CHANNEL	EACH DIV	EACH CHANNEL
DOWNSCALE ALARM	RCIS	EACH CHANNEL	NON-DIV	EACH CHANNEL
PERIOD TRIP	RPS	EACH CHANNEL	EACH DIV	EACH CHANNEL
PERIOD ALARM	RCIS	EACH CHANNEL	NON-DIV	EACH CHANNEL
BYPASS	---	EACH CHANNEL	NO	EACH CHANNEL
PERIOD WITHDRAWAL PERMISSIVE	RCIS	EACH CHANNEL	NON-DIV	EACH CHANNEL
ATWS PERMISSIVE	RTIS	EACH DIVISION	---	EACH DIVISION

TABLE 5
APRM/LPRM TRIP & ALARM INDICATIONS

TRIP/ALARM FUNCTION	OUTPUT TO:	MCRP INDICATION	MCRP ANNUNCIATION	COMPUTER INPUT
APRM NEUTRON UPSC TRIP	RPS	EACH DIV *	EACH DIV *	EACH DIV
APRM THERMAL UPSC TRIP	RPS	EACH DIV *	EACH DIV *	EACH DIV
APRM UPSC ALARM	RCIS	EACH DIV	NON-DIV	EACH DIV
APRM INOP	RPS/RCIS	EACH DIV *	EACH DIV *	EACH DIV
APRM DOWNSC ALARM	RCIS	EACH DIV	NON-DIV	EACH DIV
APRM BYPASS	---	EACH DIV	NO	EACH DIV
FLOW UPSC ALARM	RCIS	EACH DIV	NON-DIV	EACH DIV
FLOW INOP	RCIS	EACH DIV	NON-DIV	EACH DIV
CORE FLOW RAPID COASTDOWN	RPS	EACH DIV	EACH DIV	EACH DIV
LPRM UPSC ALARM	RCIS	EACH CHANNEL	NON-DIV	EACH CHANNEL
LPRM DOWNSC ALARM	RCIS	EACH CHANNEL	NON-DIV	EACH CHANNEL
LPRM BYPASS	---	EACH CHANNEL	NO	EACH CHANNEL
ATWS PERMISSIVE	RTIS	EACH DIV	---	EACH DIV
OPRM TRIP	RPS	EACH DIV	EACH DIV	EACH DIV

* - SHARED AMONG APRM NEUTRON UPSC TRIP, THERMAL UPSC TRIP & INOP.

TABLE 6
MRBM ALARM INDICATIONS

ALARM FUNCTION	OUTPUT TO:	MCRP INDICATION	MCRP ANNUNCIATION	COMPUTER INPUT
REF APRM DOWNSCALE	RCIS	EACH CHANNEL	NON-DIV	EACH CHANNEL
UPSCALE ALARM	RCIS	EACH CHANNEL	NON-DIV	EACH CHANNEL
DOWNSCALE ALARM	RCIS	EACH CHANNEL	NON-DIV	EACH CHANNEL
ALARM INST INOP	RCIS	EACH CHANNEL	NON-DIV	EACH CHANNEL
MRBM BYPASS	RCIS	EACH CHANNEL	NO	EACH CHANNEL
CORE FLOW ABNORMAL ALARM	RCIS	EACH CHANNEL	NON-DIV	EACH CHANNEL

FIGURE 7.6-1 NEUTRON MONITORING SYSTEM IED (SHEET 4 OF 4)
STP 3&4 Rev.2

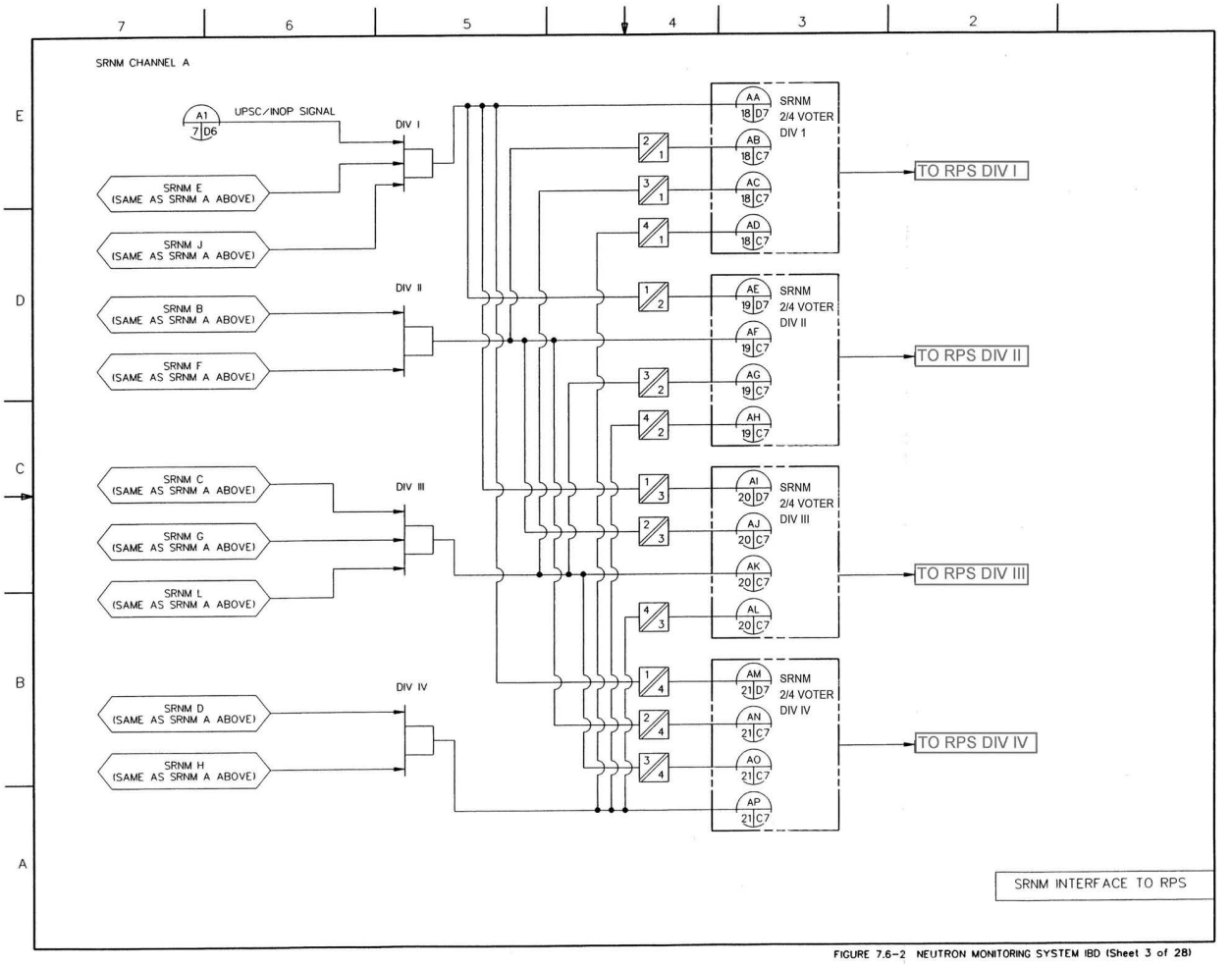

FIGURE 7.6-2 NEUTRON MONITORING SYSTEM IBD (Sheet 3 of 28)

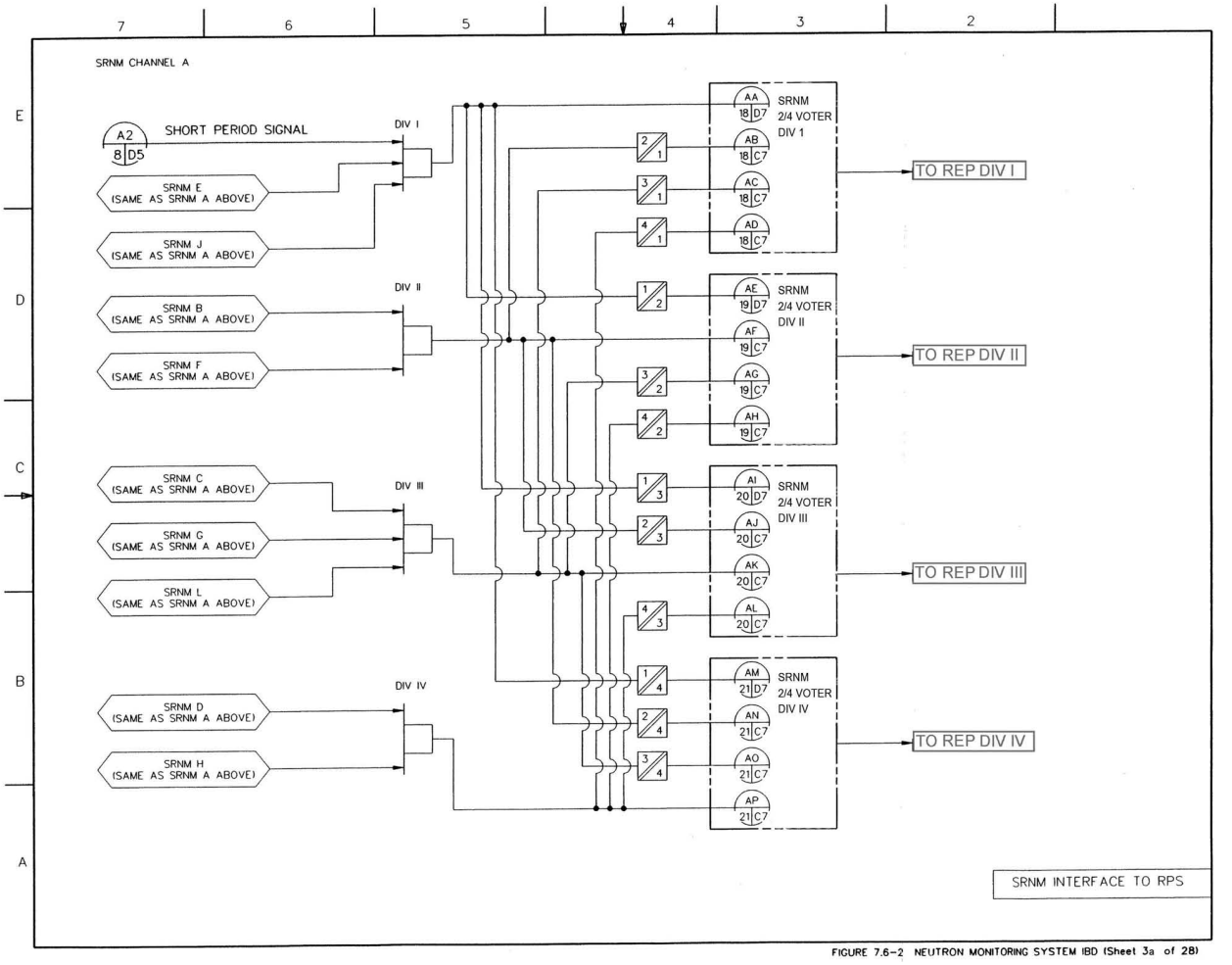

FIGURE 7.6-2 NEUTRON MONITORING SYSTEM IBD (Sheet 3a of 28)

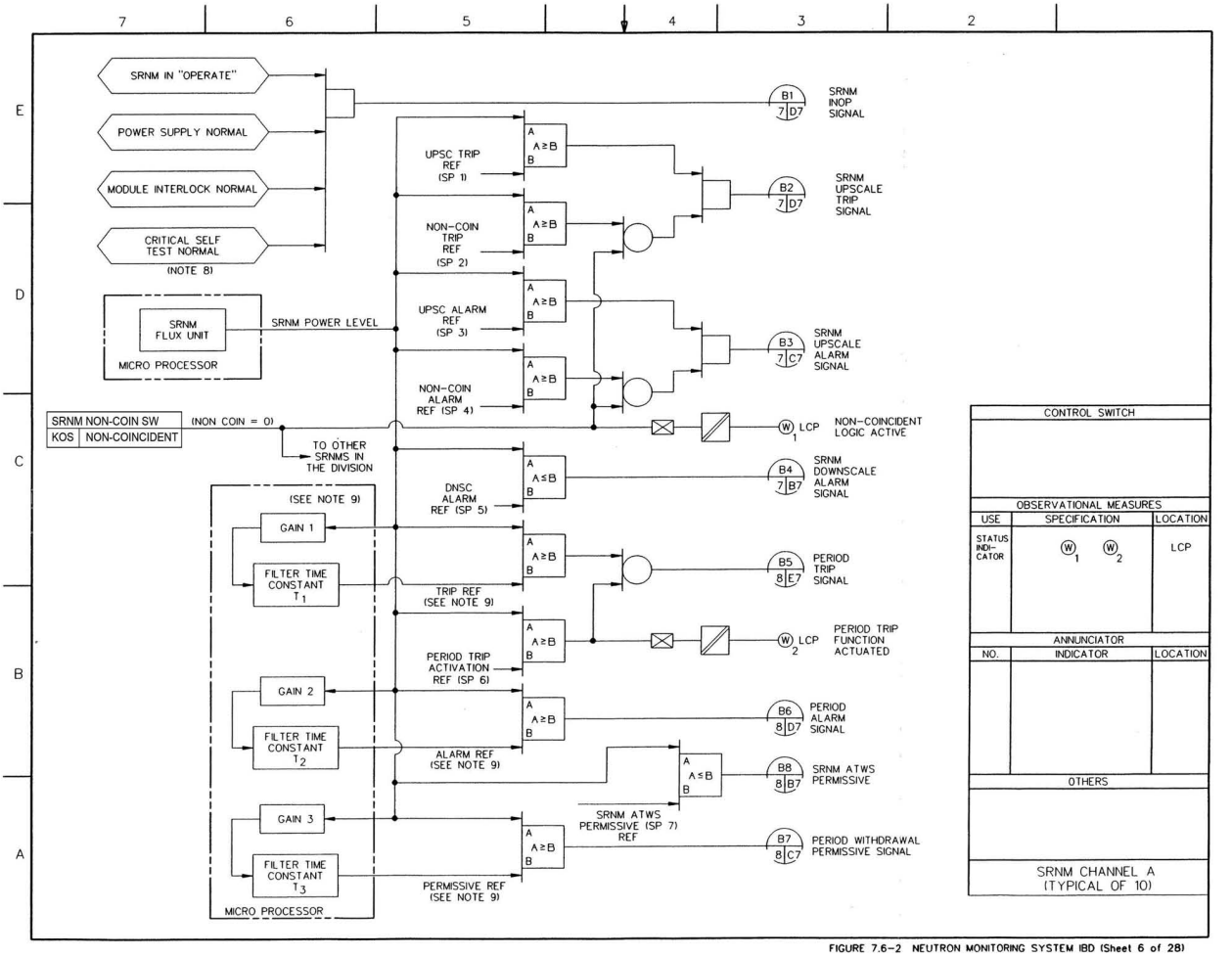

FIGURE 7.6-2 NEUTRON MONITORING SYSTEM IBD (Sheet 6 of 28)

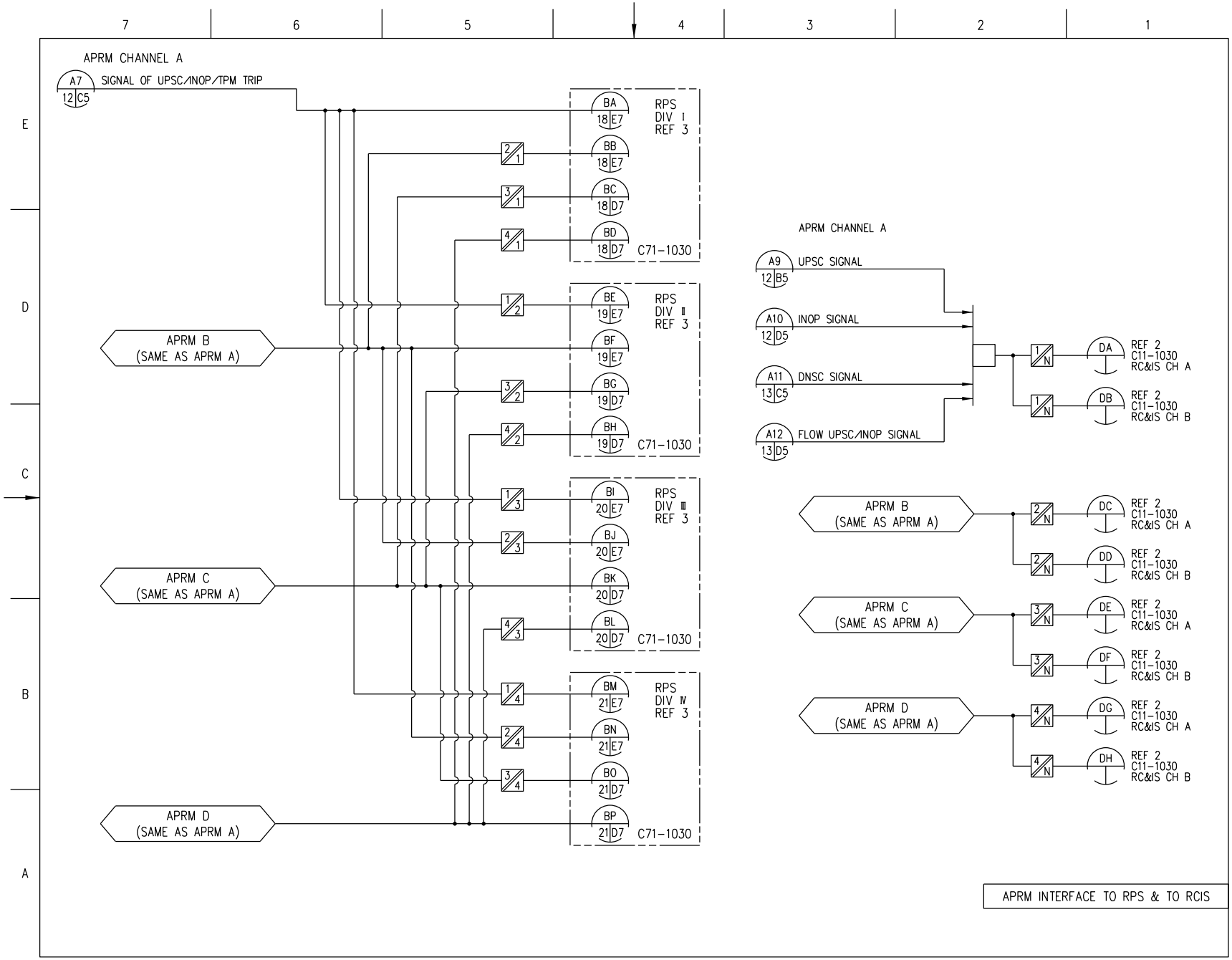

FIGURE 7.6-2 NEUTRON MONITORING SYSTEM IBD (Sheet 9 of 28)
STP 3&4 Rev.2

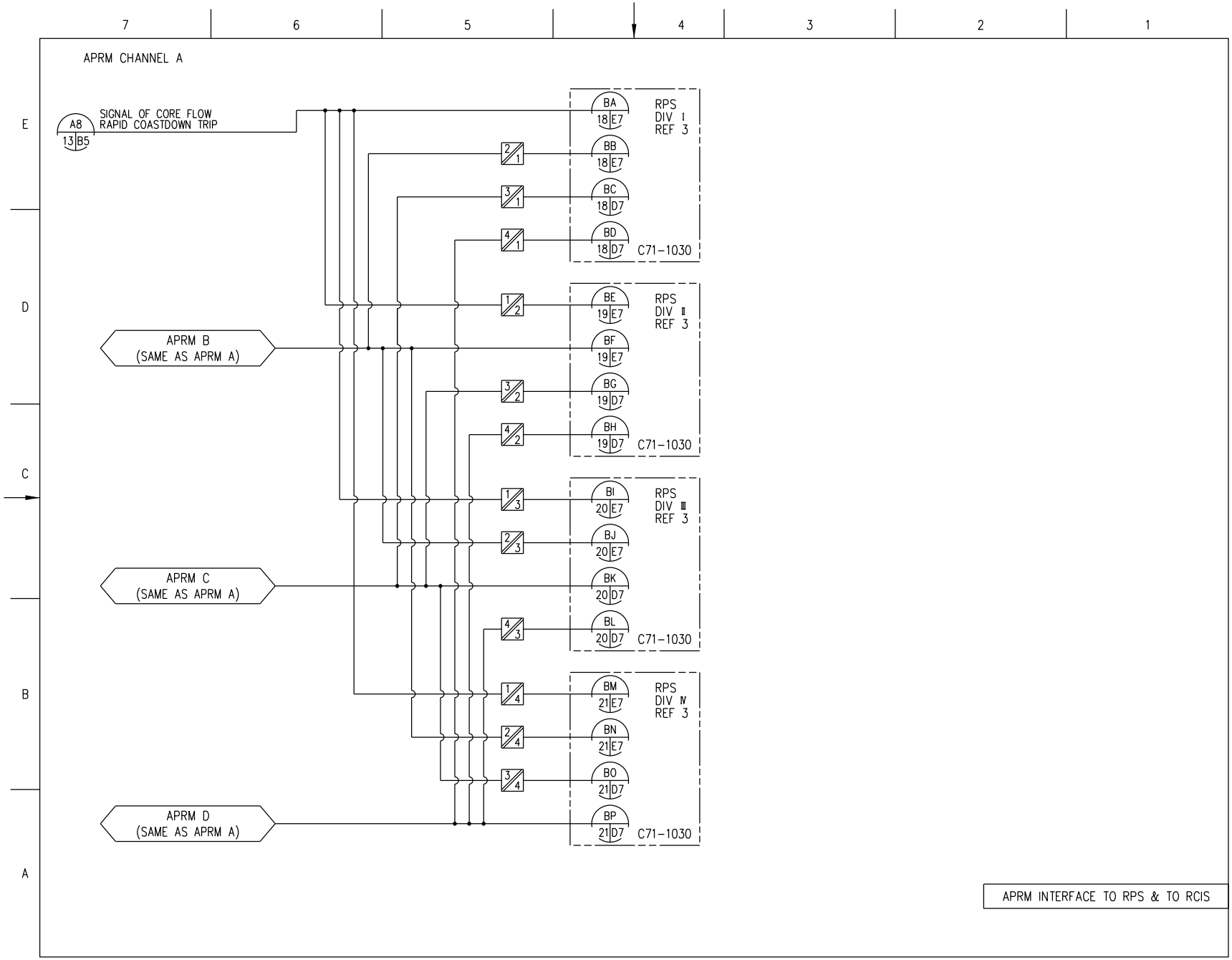

FIGURE 7.6-2 NEUTRON MONITORING SYSTEM IBD (Sheet 9a of 28)
STP 3&4 Rev.2

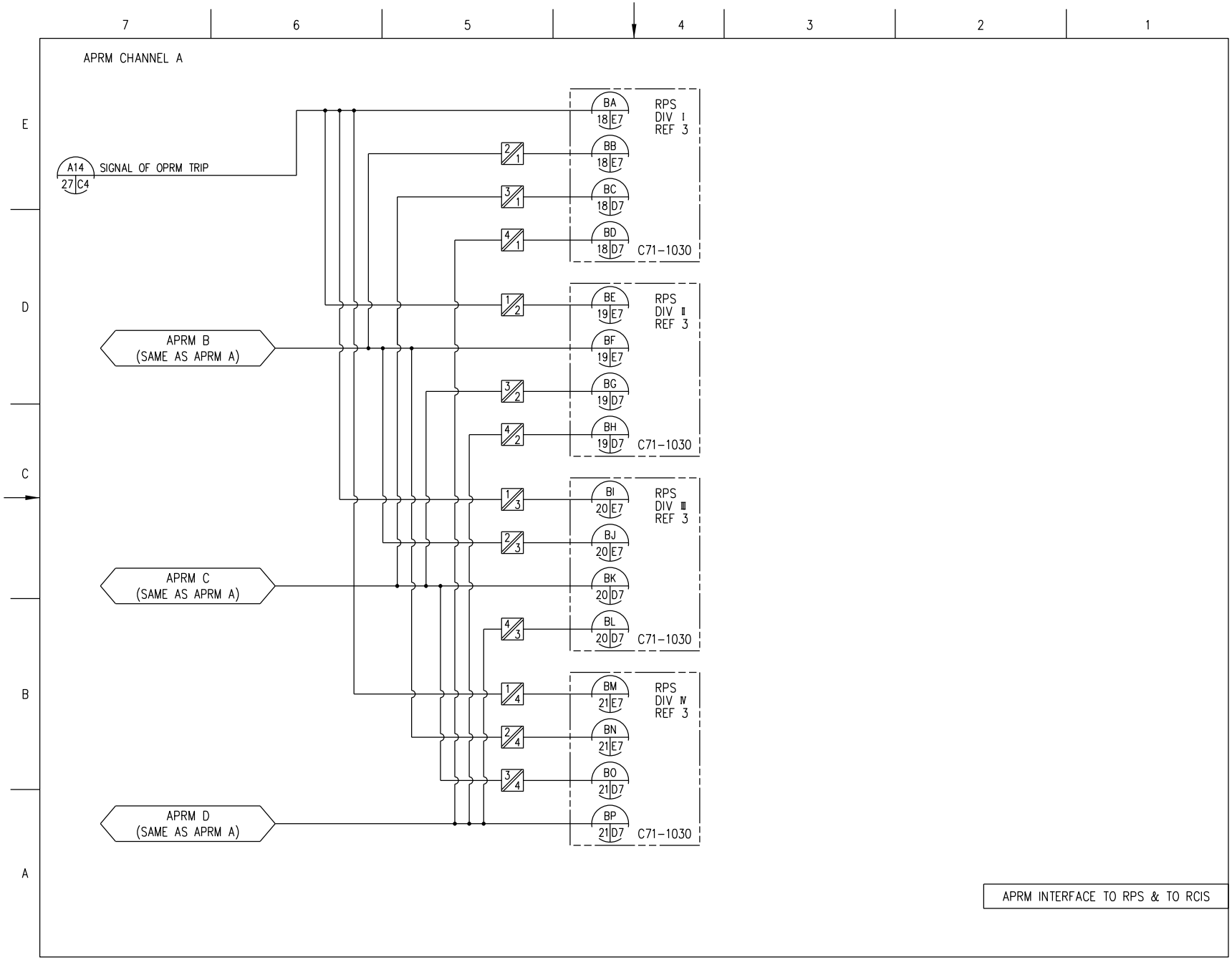

FIGURE 7.6-2 NEUTRON MONITORING SYSTEM IBD (Sheet 9b of 28)
STP 3&4 Rev.2

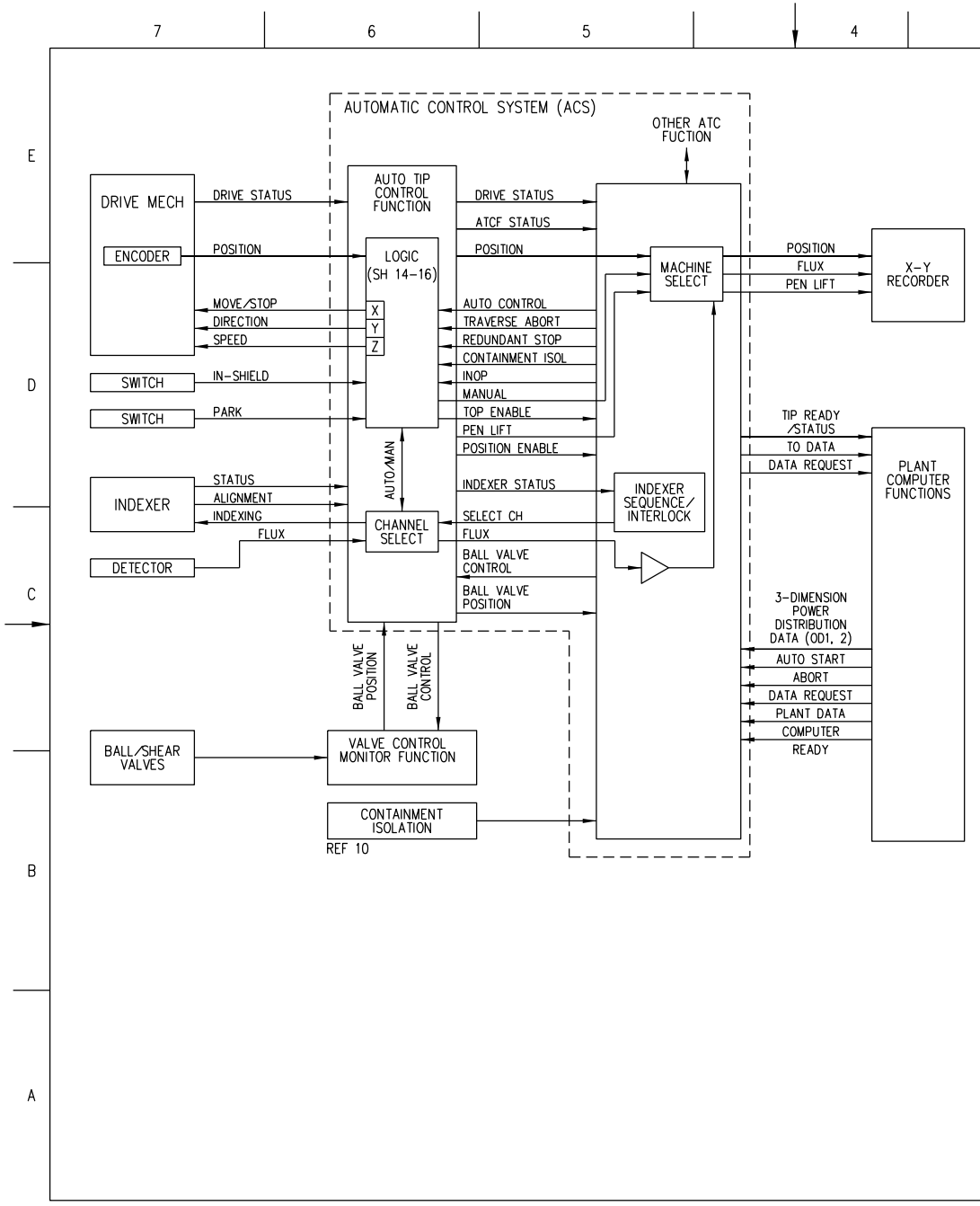

SUPPLEMENT TO ATIP IBD

AUTO TIP MECHANISM DESCRIPTION

1. COMMNAD FOR AUTO TIP FROM PLANT COMPUTER FUNCTIONS IS TRANSFERRED TO THE ATCF'S THROUGH THE ACS. THIS INITIATES AUTO-TIP COMMAND SEQUENCE.
2. EACH ATCF BEGINS SCANS FOR ALL OF ITS GUIDE TUBES. TIP DATA ARE RETAINED IN MEMORY UNIT FOR LATER ACCESS. INDEXING AND TRALERSING IS AUTOMATICALLY SEQUENCED. THE INDEXING SEQUENCE/INTERLOCK IS CONTROLLED BY THE ACS. THE TRAVERSING LOGIC FOR EACH SCAN IS FROM THE ATCF LOGIC.
3. ACS CONTROLS THE USE OF THE COMMON (REFERENCE) TUBE TO PROTECT AGAINST MULTIPLE ENTRY AND TO COORDINATE THE REFERENCE TUBE CROSS CALIBRATION.
4. WHEN ALL ATCFS HAVE COMPLETED THEIR SCANS, A SIGNAL IS RETURNED THROUGH PLANT COMPUTER FUNCTIONS NOTIFYING THEM THAT THE NEW TIP DATA IS AVAILABLE.
5. PLANT COMPUTER FUNCTIONS CAN THEN REQUEST FOR THE TIP DATA TO BE TRANSFERED.
6. AN AUTO TIP WILL BE ABORTED FOR ANY OF THE FOLLOWING REASONS:
   A. IMPROPER INDEXER OPERATION
   B. CONTAINMENT ISOLATION
   C. EXCESSIVE WAITING FOR COMMON CHANNEL
   D. MANUAL ABORT

ATIP FUNCTION CONFIGURATION

FIGURE 7.6-2 NEUTRON MONITORING SYSTEM IBD (Sheet 14 of 28)
STP 3&4 Rev.2

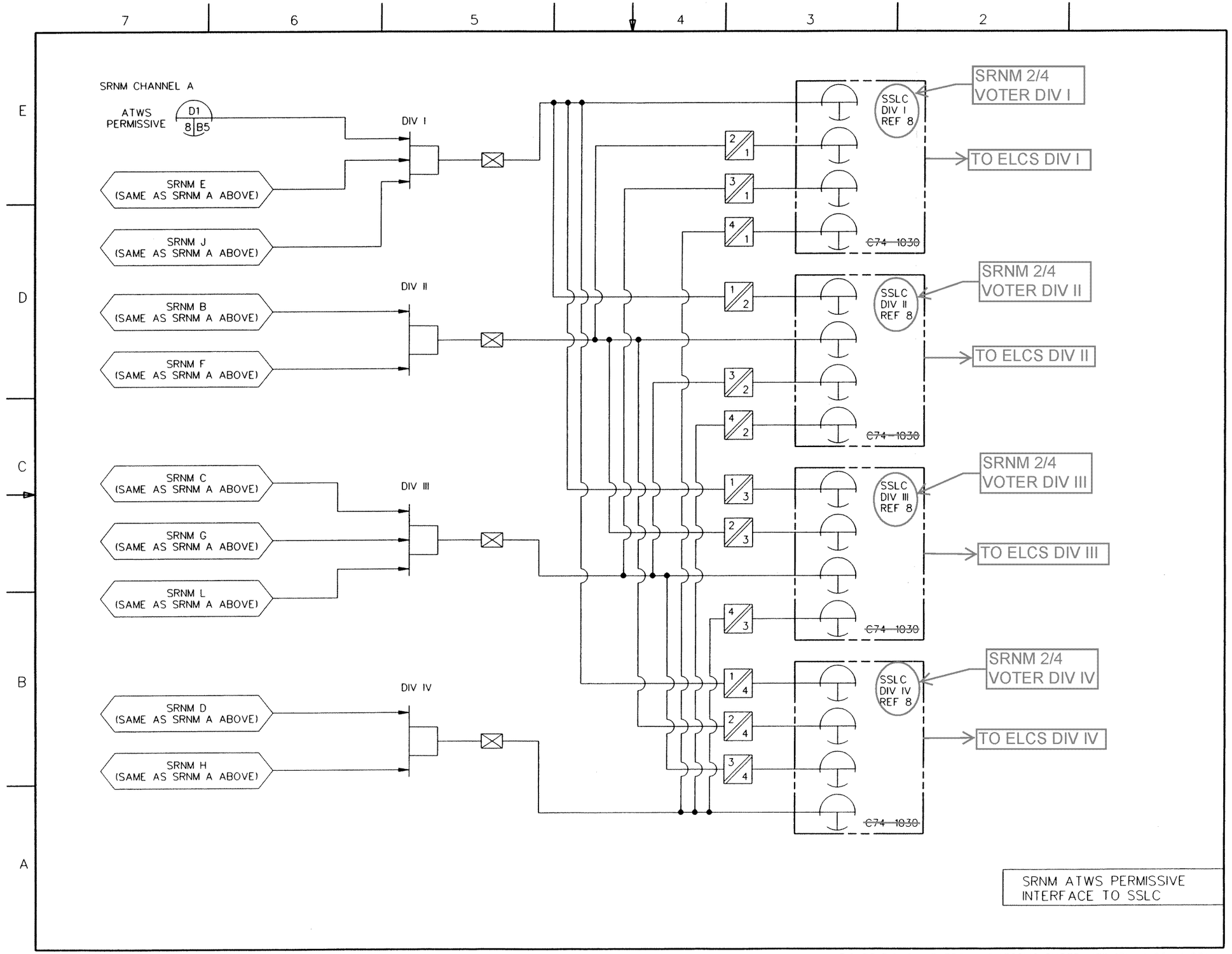

FIGURE 7.6-2 NEUTRON MONITORING SYSTEM IBD (Sheet 25 of 28)

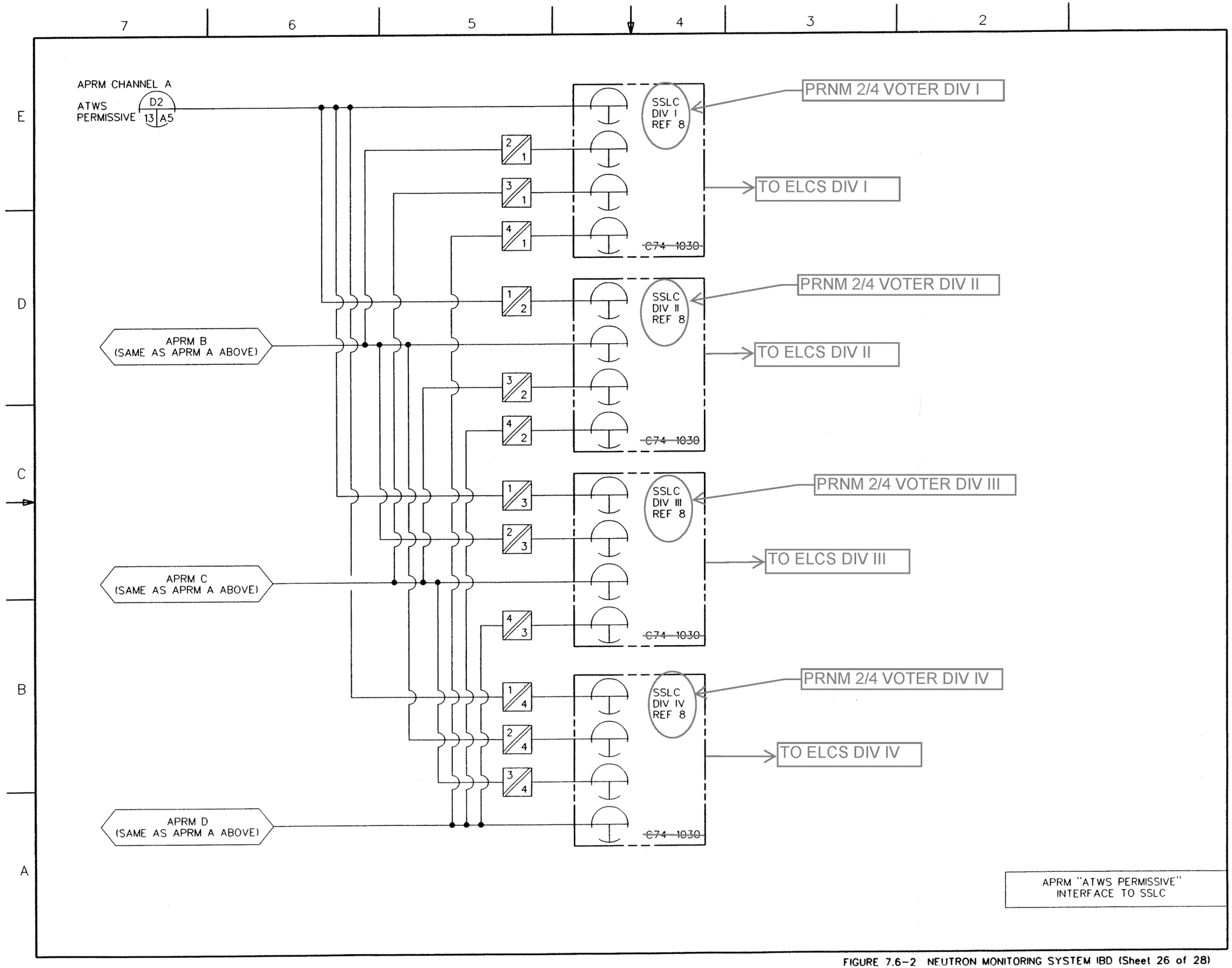

FIGURE 7.6-2 NEUTRON MONITORING SYSTEM IBD (Sheet 26 of 28)

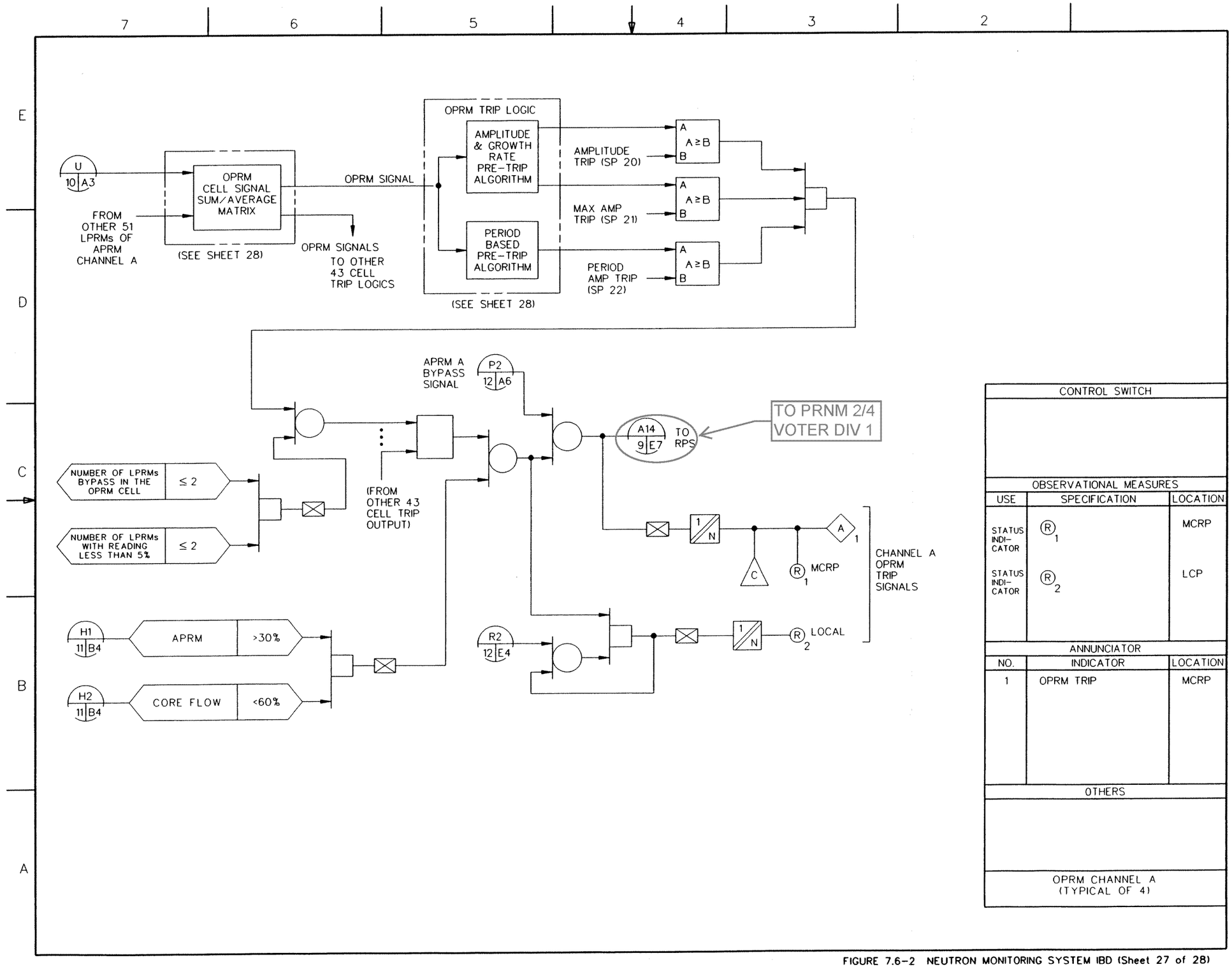

CONTROL SWITCH

OBSERVATIONAL MEASURES		
USE	SPECIFICATION	LOCATION
STATUS INDI-CATOR	R 1	MCRP
STATUS INDI-CATOR	R 2	LCP

ANNUNCIATOR		
NO.	INDICATOR	LOCATION
1	OPRM TRIP	MCRP

OTHERS

OPRM CHANNEL A
(TYPICAL OF 4)

FIGURE 7.6-2 NEUTRON MONITORING SYSTEM IBD (Sheet 27 of 28)

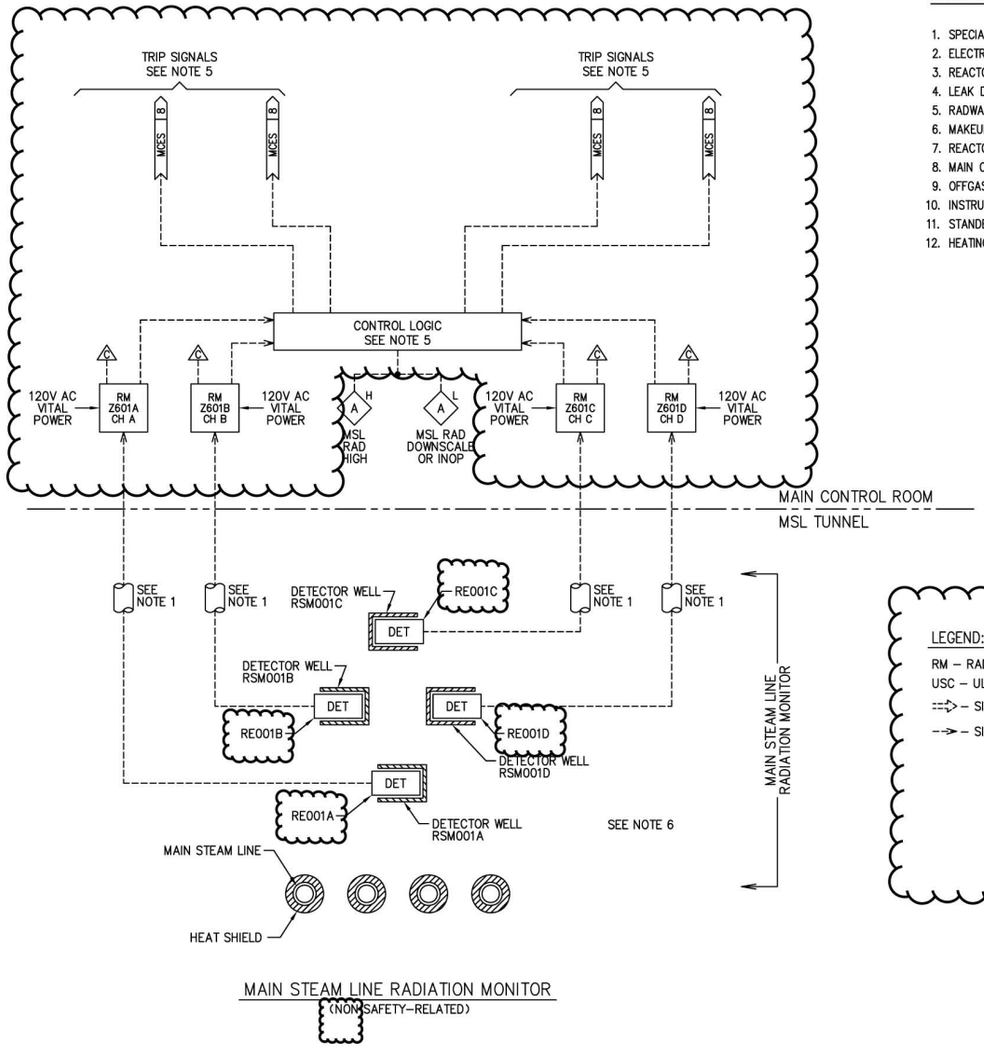

MAIN STEAM LINE RADIATION MONITOR
(NON SAFETY-RELATED)

REFERENCE DOCUMENTS

1. SPECIAL WIRE & CABLE REQUIREMENTS SPEC
2. ELECTRICAL EQUIPMENT SEPARATION SPEC
3. REACTOR PROTECTION SYSTEM IED
4. LEAK DETECTION AND ISOLATION SYSTEM IED
5. RADWASTE SYSTEM P&ID
6. MAKEUP WATER SYSTEM (PURIFIED) P&ID
7. REACTOR BUILDING COOLING WATER SYSTEM P&ID
8. MAIN CONDENSER EVACUATION SYSTEM P&ID
9. OFFGAS SYSTEM P&ID
10. INSTRUMENT AIR SYSYTEM P&ID
11. STANDBY GAS TREATMENT SYSTEM P&ID
12. HEATING, VENTILATING & AIR CONDITIONING SYSTEM P&ID

LEGEND:

RM – RADIATION MONITOR
USC – ULTRASONIC CLEANING
==> – SIGNALS
--> – SIGNALS

NOTES:

1. ALL CABLES AND WIRING SHALL CONFORM TO THE SPECIAL WIRE AND CABLE REQUIREMENTS AS SPECIFIED IN REF DOC 1.
2. THE SAFETY RELATED SUBSYSTEMS OF THE PROCESS RADIATION MONITORING SYSTEM SHALL CONFORM TO THE CRITERIA AND REQUIREMENTS FOR ELECTRICAL SEPARATION AS DEFINED IN REF DOC 2.
3. (DELETED)
4. EACH RM (Z602A,B,C,D Z603 AND Z701 TO Z704) CAN ACCOMMODATE MULTIPLE CHANNELS. THESE MONITORS ARE SHARED WITH THE OTHER SUBSYSTEMS AS INDICATED IN THIS DRAWING.
5. EACH MSL RADIATION MONITOR SHALL PROVIDE A TRIP SIGNAL ON EITHER RADIATION HIGH–HIGH OR ON DOWNSCALE INOPERATIVE (INOP) TO INITIATE THE FOLLOWING FUNCTIONS ON A COINCIDENCE VOTE OF ANY TWO OUT OF FOUR CHANNEL TRIPS:
   A. SHUTDOWN OF THE MAIN CONDENSER MECHANICAL VACUUM PUMP AND CLOSURE OF THE EXIT LINE ISOLATION VALVE
6. THE MSL DETECTOR ASSEMBLIES SHALL BE SENSITIVE TO GAMMA RAYS AND SHALL BE ARRANGED INSIDE THE MSL TUNNEL IN A MANNER SO EACH CAN PROVIDE APPROXIMATELY THE SAME RESPONSE FROM ALL THE STEAM LINES. EACH DETECTOR ASSEMBLY SHALL BE INSERTED INTO THE SEALED PIPE WELL TO BE RETRIEVABLE FROM OUTSIDE THE TUNNEL.
7. THESE DETECTORS ARE PROVIDED TO MONITOR RADIATION THAT MAY RESULT FROM A FUEL HANDLING ACCIDENT IN THE FUEL POOL OR THE REACTOR WELL.
8. EACH HVAC AIR EXHAUST RADIATION MONITOR IN THE REACTOR BUILDING AND IN THE FUEL HANDLING AREA PROVIDES A CHANNEL TRIP SIGNAL TO THE LDSS TO INITIATE THE FOLLOWING FUNCTIONS ON A COINCIDENCE VOTE OF ANY TWO OUT OF FOUR CHANNEL TRIPS:
   A. INITIATE OPERATION OF STANDBY GAS TREATMENT SYSTEM (SGTS)
   B. ISOLATE THE AIR INTAKE AND EXHAUST DUCTS OF THE HVAC SYSTEM
   C. ISOLATE THE PURGE AND VENT VALVES OF SECONDARY CONTAINMENT

   THE CHANNEL TRIP SIGNAL FROM EACH MONITOR SHALL CONSIST OF EITHER RADIATION HIGH–HIGH TRIP OR RADIATION DOWNSCALE/INOPERATIVE (INOP) TRIP.
9. THE OFF–GAS SAMPLE CHAMBER SHALL BE MOUNTED VERTICALLY WITH ITS PIPING SLOPED AWAY FROM THE CHAMBER TO PERMIT THE CONDENSATE TO DRAIN TO THE PROCESS LINE. A DRAIN SHALL BE PROVIDED AT THE BOTTOM OF THE SAMPLE CHAMBER.
10. EACH RADIATION MONITOR SHALL PROVIDE TRIP SIGNALS TO THE OFF–GAS SYSTEM TO PERFORM THE FOLLOWING FUNCTION:
    A. BASED ON ONE–OUT–TWO LOGIC SIGNAL, THE RADIATION HIGH–HIGH TRIP SIGNAL FROM EITHER MONITOR SHALL INITIATE VALVE ALIGNMENT OF THE OFF–GAS SYSTEM TO FORCE THE GASEOUS EFFLUENTS THROUGH THE CHARCOAL VAULT FOR TREATMENT PRIOR TO RELEASE TO THE STACK.
    B. BASED ON TWO–OUT–OF TWO LOGIC SIGNALS, THE RADIATION MONITOR CHANNEL TRIP SIGNALS SHALL INITIATE CLOSURE OF THE OFF–GAS SYSTEM VENT RELEASE VALVE ON RADIATION HIGH–HIGH–HIGH (HHH) CHANNEL TRIP FROM BOTH MONITORS, OR ON DOWNSCALE/INOPERATIVE CHANNEL TRIP FROM BOTH MONITORS, OR ON ONE HHH CHANNEL TRIP FROM ONE MONITOR AND ONE DOWNSCALE/INOPERATIVE CHANNEL TRIP FROM THE SECOND MONITOR.
11. HEATING OF THESE LINES MAY BE REQUIRED TO PREVENT CONDENSATION. HEATERS SHALL BE SIZED SO THE TEMPERATURE IS KEPT ABOVE THE DEW POINT.
12. THE RADIATION HIGH–HIGH TRIP SIGNAL FROM EACH MONITOR SHALL INITIATE CLOSURE OF ITS RESPECTIVE LCW AND HCW OUTBOARD DRAIN LINE ISOLATION VALVE.
13. THE RADIATION HIGH–HIGH TRIP THE DOWNSCALE/INOPERATIVE. OR A NOT SAMPLING CONDITION SHALL CAUSE SHUTDOWN OF THE RADWASTE SYSTEM LIQUID EFFLUENT DISCHARGE PUMPS AND CLOSURE OF THE OUTLET VALVE IN THE DISCHARGE LINE.
14. THE RADIATION MONITOR OF EACH SUBSYSTEM SHALL ISOLATE ITS RESPECTIVE AIR INTAKE DUCTS TO THE CONTROL BUILDING AND START THE EMERGENCY AIR CIRCULATING FAN ON A COINCIDENCE VOTE OF ANY TWO OUT OF FOUR CHANNEL TRIPS ON EITHER RADIATION HIGH–HIGH OR ON DOWNSCALE/INOPERATIVE INDICATION.
15. (DELETED)
16. (DELETED)
17. REMOVABLE SECTION SHALL BE PROVIDED NEAR THE ISOKINETIC PROBE FOR THE INSERTION OF A CHARCOAL FILTER HOLDER OF SIGNIFICANT DEPOSITION IS SUSPECTED. THE FITTINGS ETC. SHALL PROVIDE SMOOTH TRANSITIONS WITHOUT EITHER INTRODUCING DISCONTINUITIES OR REDUCING THE CROSS SECTIONAL AREA OF THE FLOW STREAM.
18. HEATER AND CONDENSATE DRAIN WITH TRAP TO BE SIZED SO THAT TEMPERATURE OF SAMPLE STREAM IS KEPT ABOVE DEW POINT.
19. CONTROL OF THE CHECK SOURCE CAN BE INTEGRATED INTO THE RM AS PART OF THE MONITOR.
20. (DELETED)

FIGURE 7.6-5 PROCESS RADIATION MONITORING SYSTEM IED (SHEET 1 OF 11)

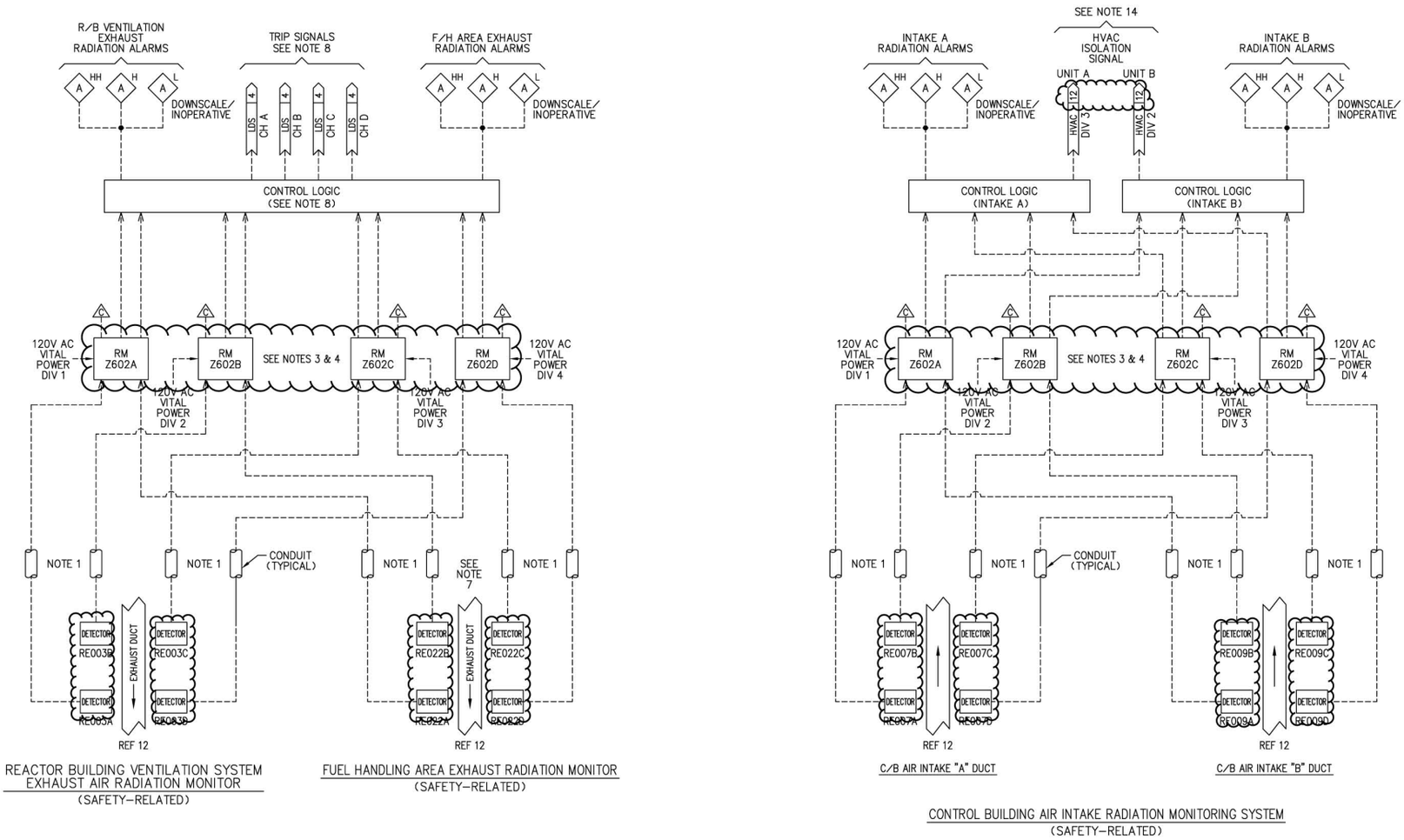

FIGURE 7.6-5 PROCESS RADIATION MONITORING SYSTEM IED (SHEET 2 OF 11)
STP 3&4 Rev.2

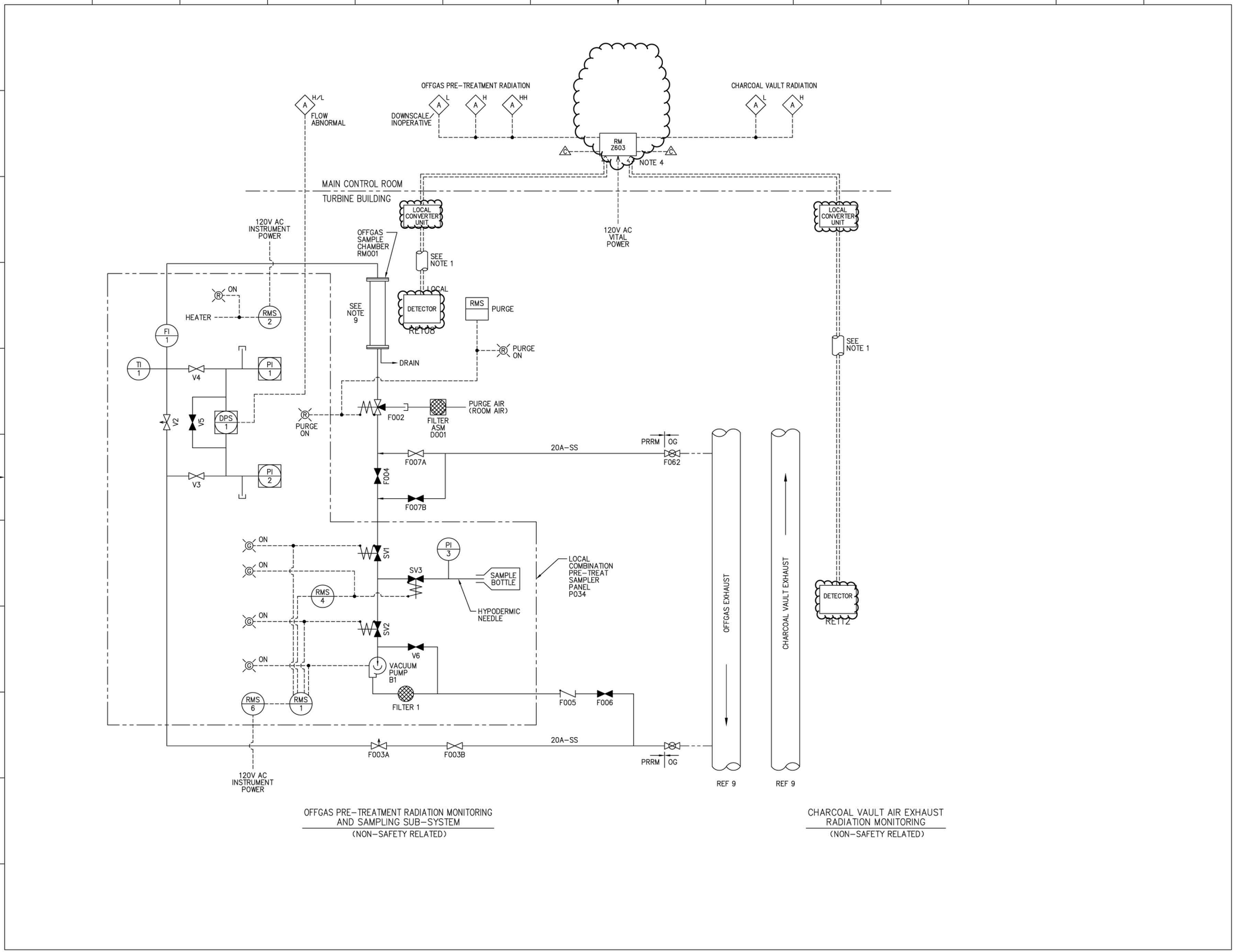

FIGURE 7.6-5 PROCESS RADIATION MONITORING SYSTEM IED (SHEET 3 OF 11)

STP 3&4 Rev.2

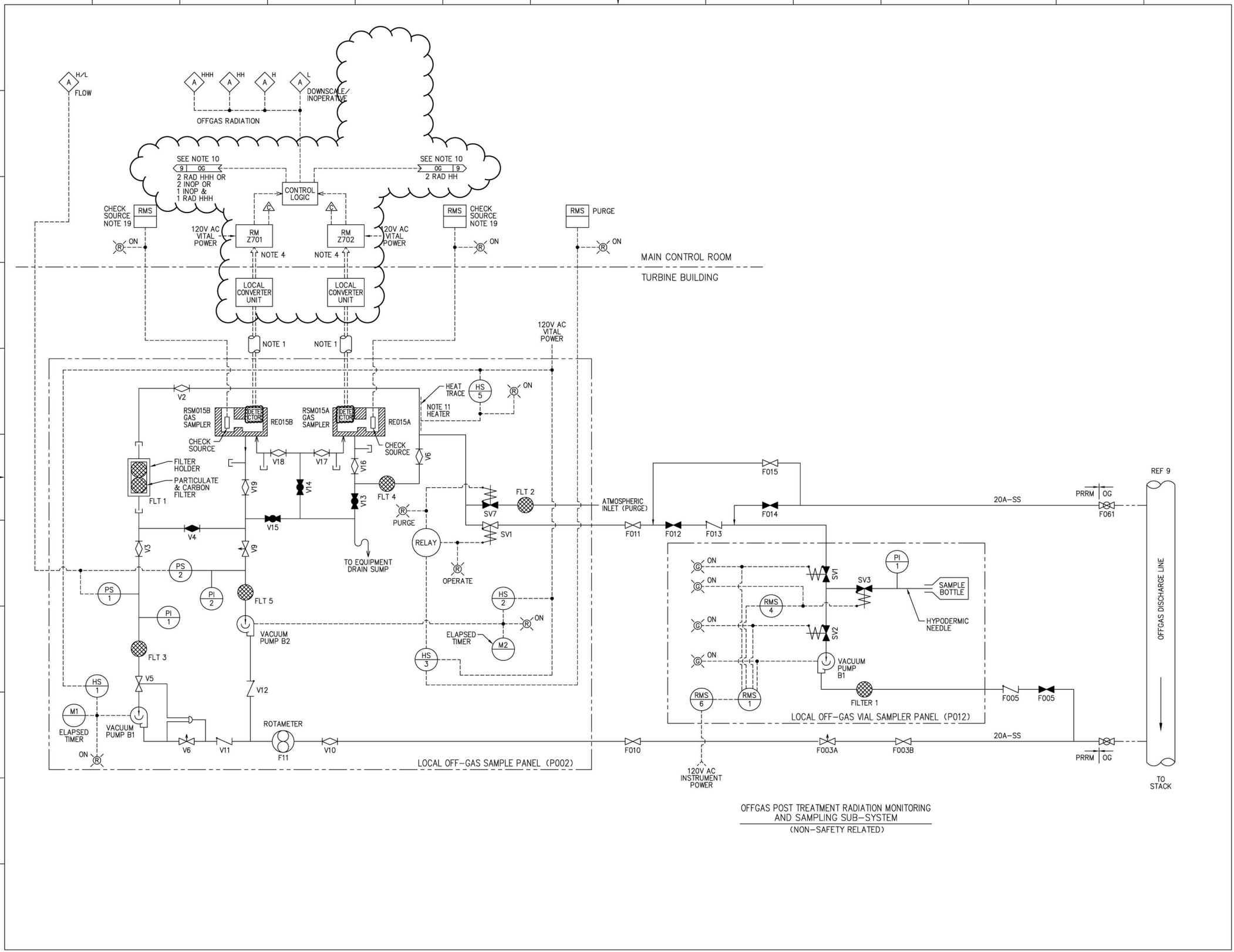

OFFGAS POST TREATMENT RADIATION MONITORING
AND SAMPLING SUB-SYSTEM
(NON-SAFETY RELATED)

FIGURE 7.6-5 PROCESS RADIATION MONITORING SYSTEM IED (SHEET 4 OF 11)

STP 3&4 Rev.2

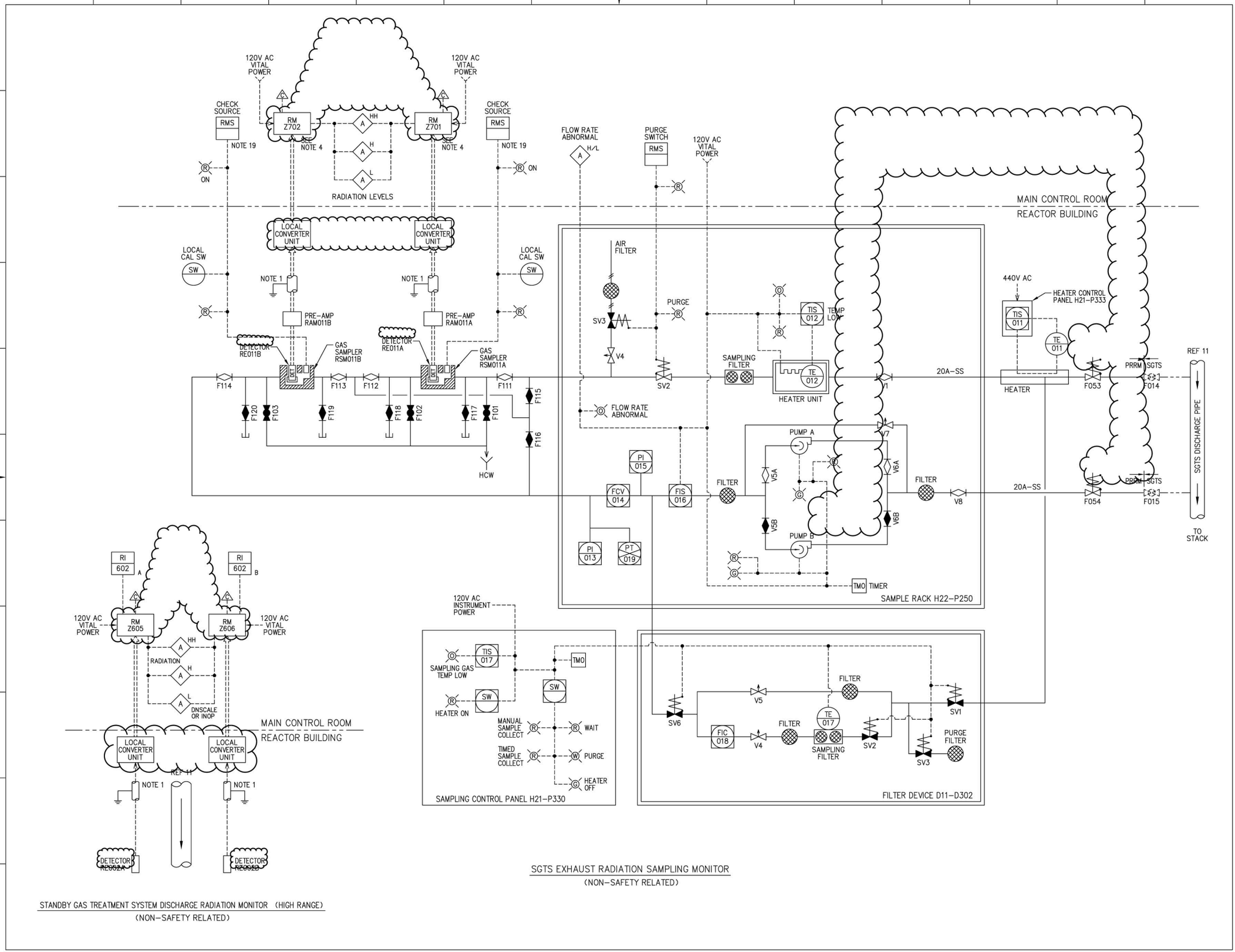

FIGURE 7.6-5 PROCESS RADIATION MONITORING SYSTEM IED (SHEET 5 OF 11)

STP 3&4 Rev.2

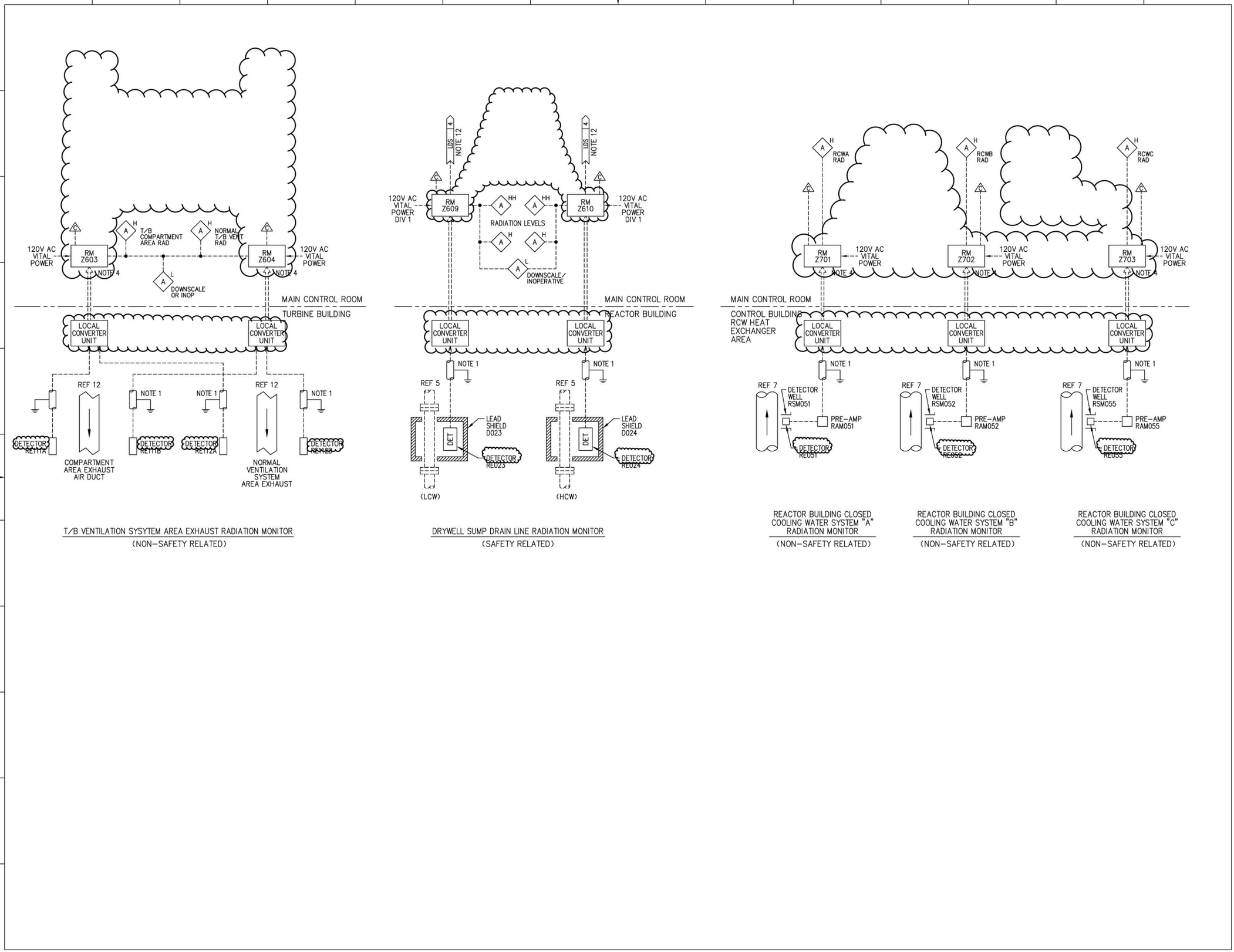

FIGURE 7.6-5 PROCESS RADIATION MONITORING SYSTEM IED (SHEET 6 OF 11)

STP 3&4 Rev.2

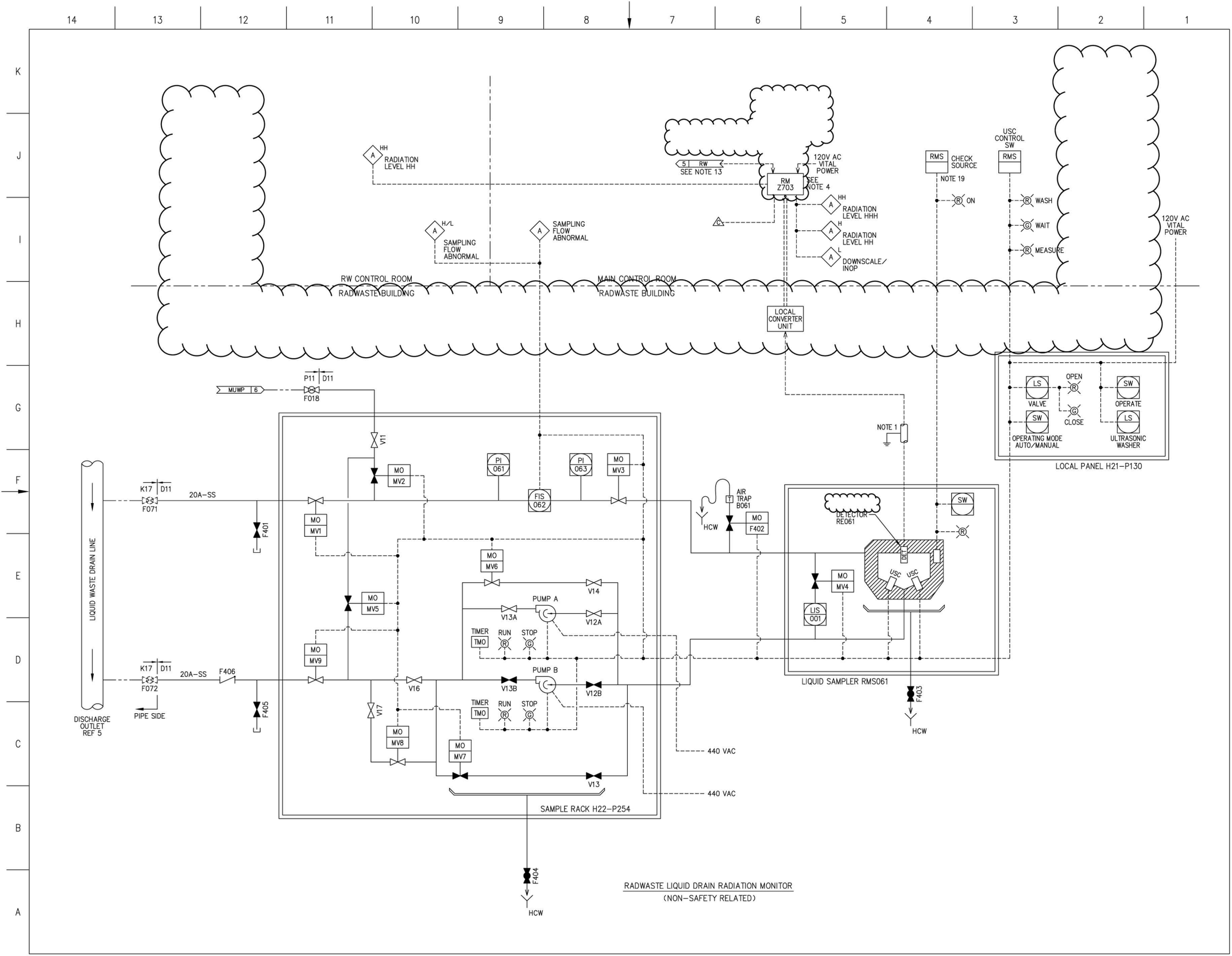

FIGURE 7.6-5 PROCESS RADIATION MONITORING SYSTEM IED (SHEET 7 OF 11)

STP 3&4 Rev.2

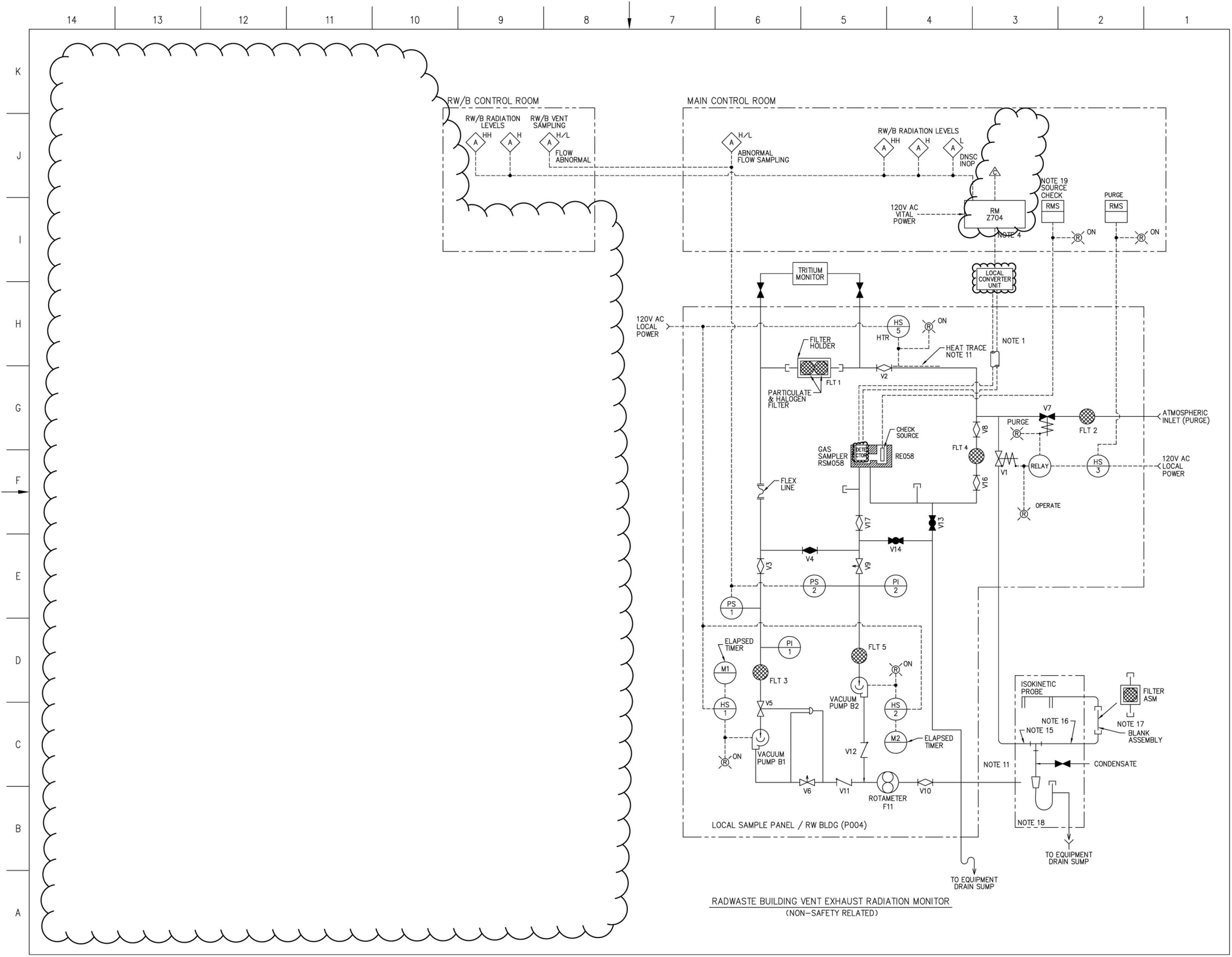

FIGURE 7.6-5 PROCESS RADIATION MONITORING SYSTEM IED (SHEET 8 OF 11)

STP 3&4 Rev.2

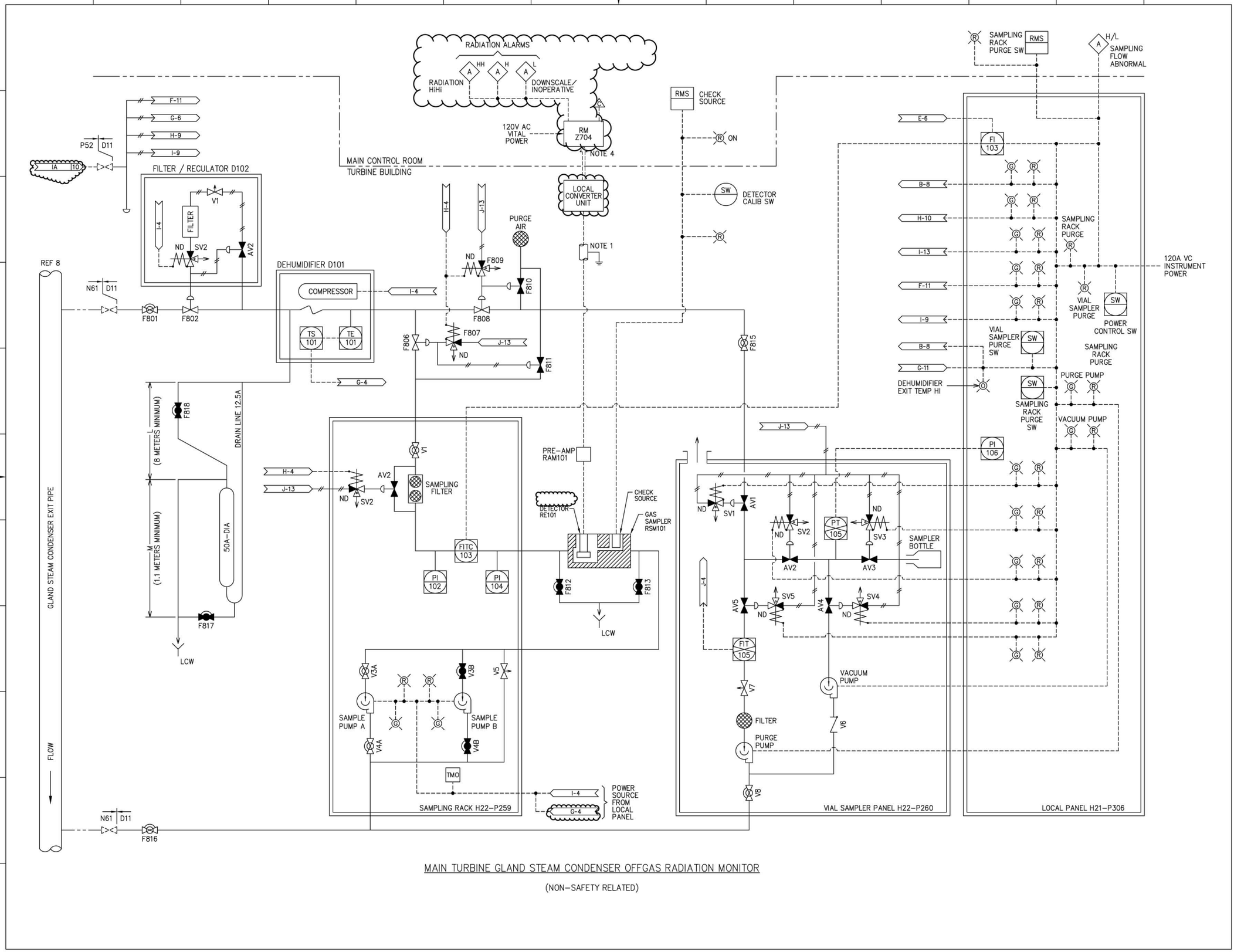

MAIN TURBINE GLAND STEAM CONDENSER OFFGAS RADIATION MONITOR

(NON-SAFETY RELATED)

FIGURE 7.6-5 PROCESS RADIATION MONITORING SYSTEM IED (SHEET 9 OF 11)

STP 3&4 Rev.2

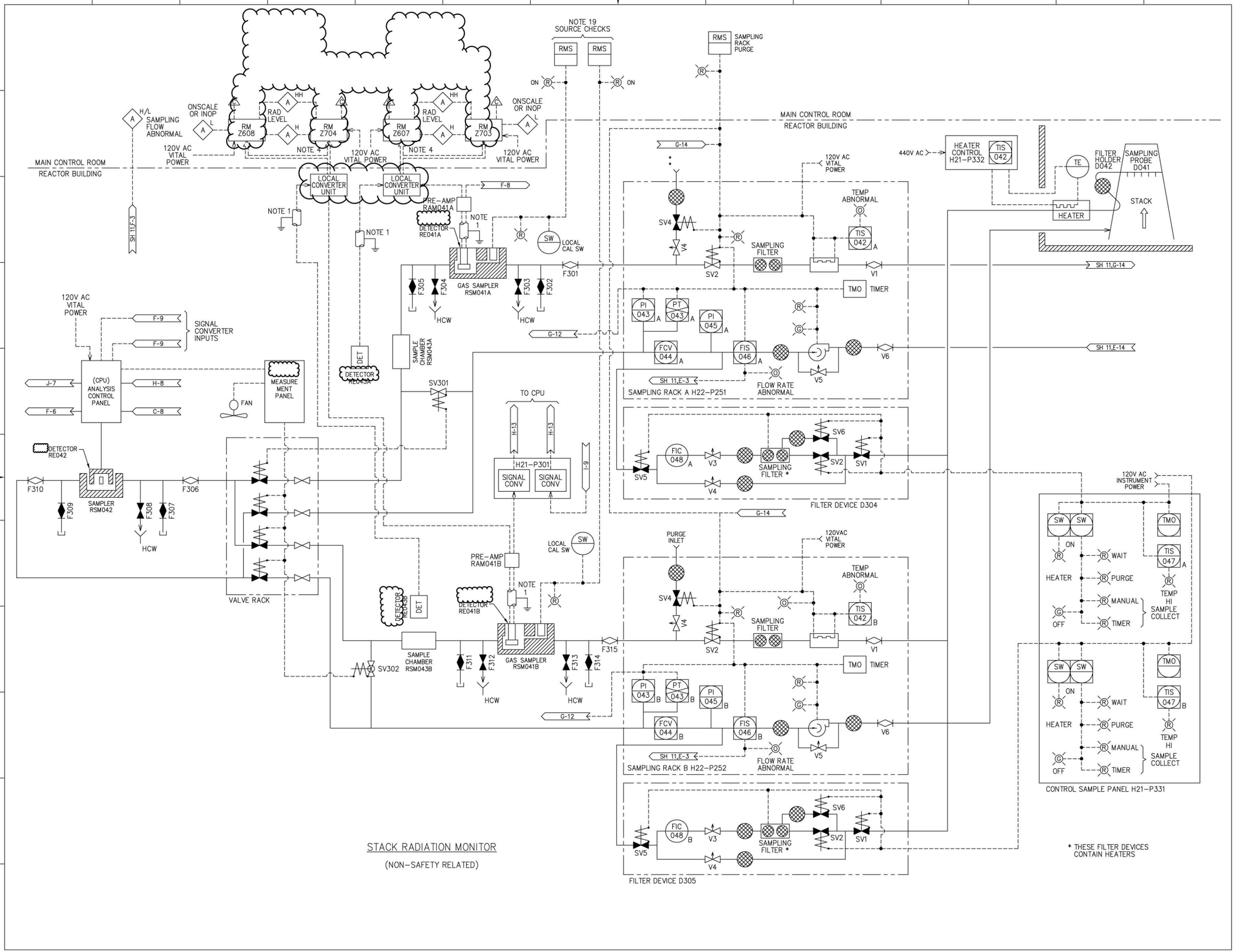

FIGURE 7.6-5 PROCESS RADIATION MONITORING SYSTEM IED (SHEET 10 OF 11)

STP 3&4 Rev.2

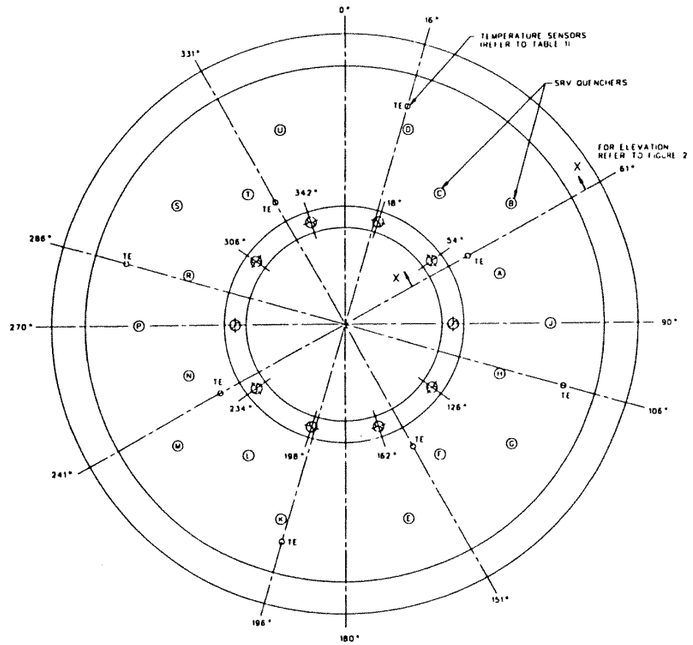

FIGURE 1 INSTRUMENTATION LOCATION DEFINITION

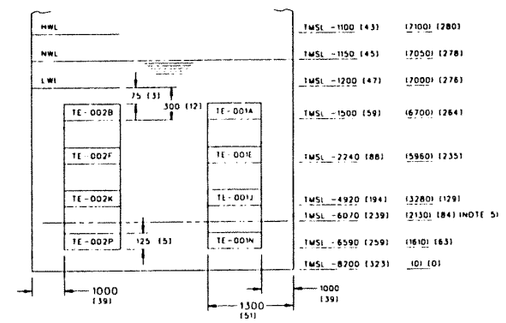

VIEW X-X FROM FIGURE 1
NOTES 2,6,7

FIGURE 2 SENSOR AND ENVELOPE DEFINITION

NOTES

1. DIVISION I AND DIVISION III AND DIVISION II AND DIVISION IV TEMPERATURE SENSORS AT EACH LOCATION SHALL BE SEPARATED BY 150 300 MM (6-12 INCHES)
2. TYPICAL OF DIVISION I AND DIVISION II SENSORS AT AZIMUTHAL LOCATIONS 16° AND 61°. DIVISION III AND DIVISION IV SENSORS ARE NOT SHOWN
3. BULK AVERAGE TEMPERATURE ALARM
4. SIGNALS FROM TE WHICH ARE LOCATED AT THE SAME LEVEL SHALL BE OMITTED FROM AVERAGE TEMPERATURE CALCULATION, WHEN S/P WATER LEVEL DECREASE BELOW SENSOR LEVEL
5. MIDDLE QUENCHER LEVEL
6. TWSL = TYPICAL MEAN SFA LEVEL
7. NUMBER ARE IN MILIMETER EXCEPT (.) WHICH ARE IN INCHES

SUPPLEMENTAL DOCUMENTS UNDER THE FOLLOWING IDENTITIES SHALL BE USED IN CONJUNCTION WITH THIS DRAWING

		REFERENCE DESIGNATOR
1	ATMOSPHERIC CONTROL SYSTEM P&ID	E31-1010
2	REMOTE SHUTDOWN SYSTEM IED	C61-1010
3	RESIDUAL HEAT REMOVAL SYS P&ID	E11-1010
4	PIPING AND INSTRUMENT SYMBOLS DIAGRAM	A10-3030
5	REACTOR PROTECTION SYSTEM IED	C71-1010
6	REACTOR BUILDING COOLING WATER SYS P&ID	P21-1010

TABLE 1 SENSOR DIVISION ASSIGNMENT

	DIVISION I	DIVISION II	DIVISION III	DIVISION IV
16°	TE-001A,E,J,N		TE-001C,G,L,R	
61°		TE-002B,F,K,P		TE-002D,H,M,S
106°		TE-003B,F,K,P		TE-003D,H,M,S
151°	TE-004A,E,J,N		TE-004C,G,L,R	
196°	TE-005A,E,J,N		TE-005C,G,L,R	
241°		TE-006B,F,K,P		TE-006D,H,M,S
286°		TE-007B,F,K,P		TE-007D,H,M,S
331°	TE-008A,E,J,N		TE-008C,G,L,R	

67
142
247
322

MPL NO 153 1010

FIGURE 7.6-11 SUPPRESSION POOL TEMPERATURE MONITORING SYSTEM (1 SHEET OF 3)

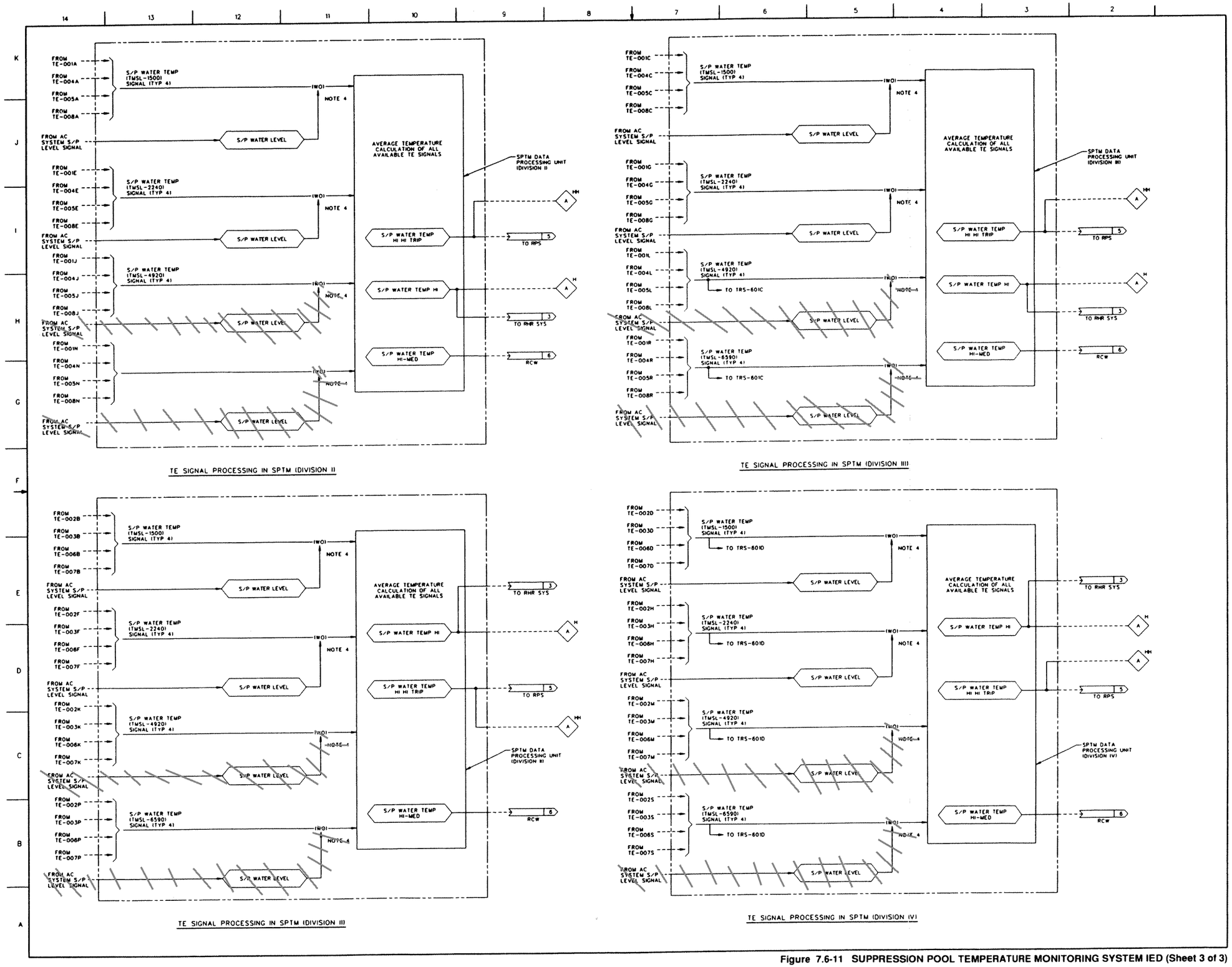

Figure 7.6-11 SUPPRESSION POOL TEMPERATURE MONITORING SYSTEM IED (Sheet 3 of 3)

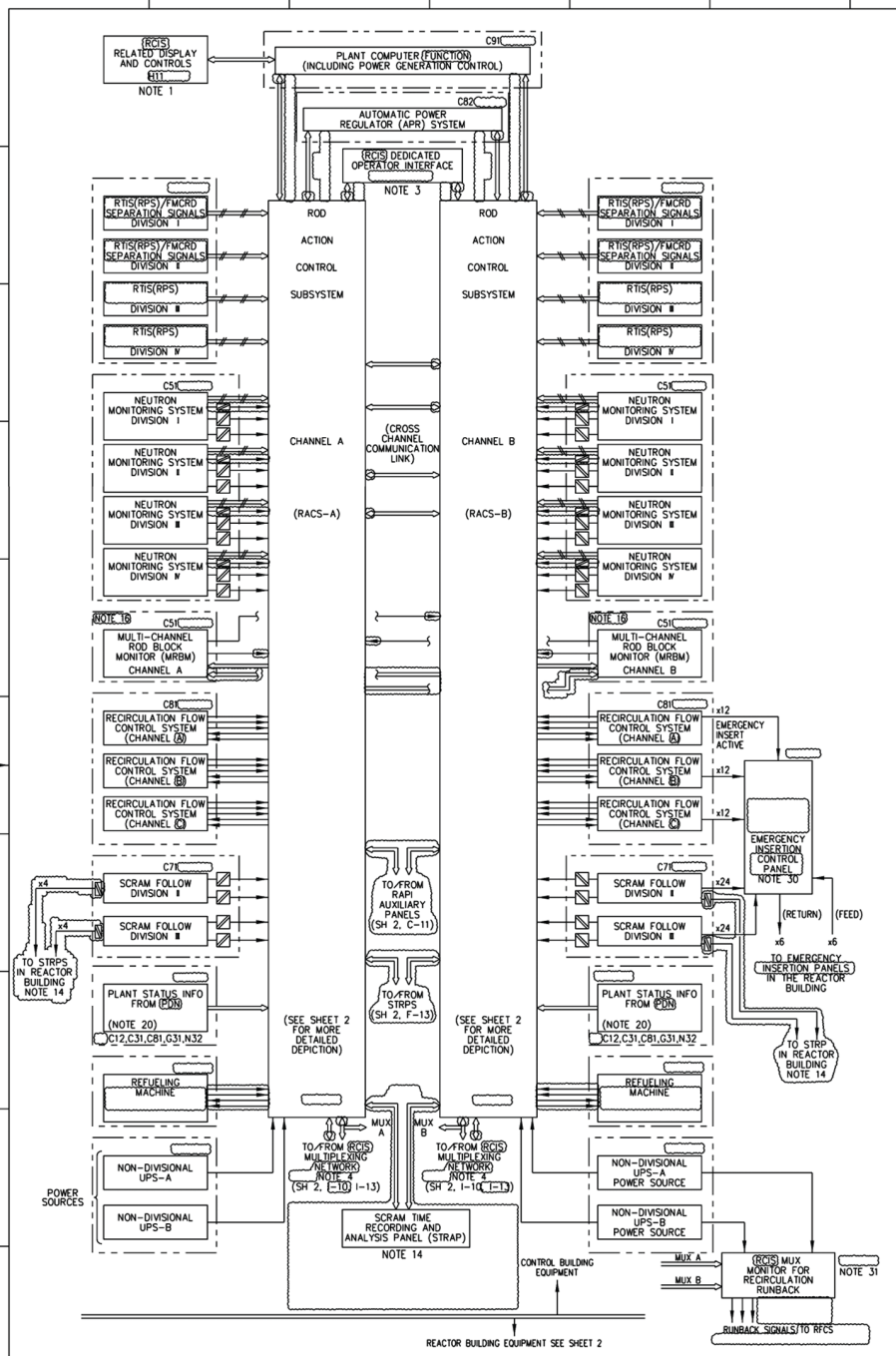

NOTES

1. THESE RC&IS RELATED DISPLAYS AND CONTROLS INTERFACE DIRECTLY WITH THE PROCESS COMPUTER SYSTEM FLAT DISPLAY. TEHSE DISPLAYS AND CONTROLS ARE MOSTLY BASED AND ARE LOCATED AT THE MAIN OPERATOR INTERFACE CONTROL PANEL.
2. SIGNAL TO RFCS PROVIDE FLOW BLOCK AND ATLM BYPASS STATUS. RFCS SIGNALS TO RC&IS CONSIST OF ROD BLOCK, ARI AND SCRRI SIGNALS.
3. THE RC&IS DEDICATED OPERATOR INTERFACE PROVIDES RC&IS STATUS SUMMARY INFORMATION AND INCLUDES CONTROLS FOR ADCIVATING SPECIAL RC&IS INSERTION FEATURES AND KEY BYPASS CONDITIONS, AND FOR INITIATING OTHER SPECIAL RC&IS FEATURES AND PERFORMING MANUAL OR SEMI-AUTOMATIC ROD MOVEMENTS.
4. THE RC&IS MULTIPLEXING NETWORK INCLUDES SUITABLE CONFIGURATION OF THE FIBER OPTIC COMMUNICATION LINKS AND ASSOCIATED HARDWIRED COMMUNICATION LINKS SUCH THAT REQUIRED COMMUNICATION TO ACHEVE THE RC&IS FUNCTIONS AND OPERATION IS ESTABLISHED. THE EXACT CONFIGURATION USED (EXAMPLE STAR, RING, ETC.) FOR THIS NETWORK IS NOT SPECIFIED OR DEPICTED BY THIS IED (THIS IS A DETAILED DESIGN DECISION). THERE SHALL BE TWO INDEPENDENT CHANNELS OF THIS MULTIPLEXING NETWORK BETWEEN RACS AND RSPCS, STRPS AND RACS, AND RAPI AUX PANELS AND RACS.
5. RCC POWER SUPPLIES PROVIDE APPROPRIATE DC POWER FOR SYNCHRO TO DIGITAL CONVERTER AND ROD SERVER MODULE LOGIC WITHIN A GIVEN REMOTE COMMUNICATION CABINET.
6. NOT USED
7. THE 3-PHASE AC POWER SOURCE FOR THE STEPPING MOTOR DRIVER MODULES, THE INNVERTER CONTROLLER POWER SUPPLIES, THE ROD BRAKE CONTROLLER POWER SUPPLIES, EMERGENCY ROD INSERTION PANELS AND EMERGENCY ROD INSERTION CONTROL PANEL IS NORMALLY DERIVED FROM THE DIVISION 1 CLASS 1E POWER BUS.
8. MULTIPLE STEPPING MOTOR DRIVER MODULES ARE HOUSED IN FINE MOTION DRIVER CABINETS. THERE ARE 205 STEPPING MOTOR DRIVER MODULES AND ASSOCIATED WITH EACH ONE IS A CORRESPONDING INVERTER CONTROLLER HOUSED IN THE SAME CABINET
9. APPROPRIATE EXCITATION POWER SHALL BE PROVIDED FOR THE FMCRD INSTRUMENTATION. THIS DETAIL IS NOT DEPICTED ON THIS IED.
10. THE SEPARATION SWITCHES (A/B) OF THE FMCRD DO NOT DIRECTLY INTERFACE WITH THE RC&IS. THESE SWITCHES PROVIDE APPROPRIATE STATUS SIGNALS TO THE RACS VIA RAPI SIGNAL INTERFACE UNITS SO THAT ROD BLOCK OCCURS WHEN SEPARATION IS DETECTED.
11. AN APPROPRIATE REFERENCE ROD PULL SEQUENCE IS TO BE ESTABLISHED PRIOR TO COMMENCING PLANT STARTUP.
12. FMCRD MOVEMENT IS PERMITTED WHEN BOTH ROD MOVEMENT PERMISSIVE SIGNALS FROM RSPC CHANNEL A AND RSPC CHANNEL B ENABLE.
13. ALL INVERTER CONTROLLER INPUT SIGNALS (I.E. CONTROLLER TROUBLE) TO THE ROD SERVER MODULE CHANNELS ARE DISCRETE SIGNALS.
14. THE SCRAM TIME RECORDING PANELS (STRPS) THAT ARE LACATED IN THE REACTOR BUILDING PROVIDE FOR AUTOMATED SCRAM TIME PERFORMANCE RECORDIONG BASED UPON THE ACTIVATION/DEACTIVATION OF THE POSITION STATUS REED SWITCHES OF THE ASSOCIATED FMCRD. FOR A FULL CORE SCRAM, THE SCRAM SIGNALS IS USED FOR THE TIME ZERO REFERENCE FOR SCRAM TIME RECORDING. FOR A SINGLE HCU SCRAM TEST, THE SCRAM TEST SWITCH STATUS IS USED FOR THE TIME ZERO REFERRENCE. THE RECORDED DATA CAN BE TRANSMITTED TO THE SCRAM TIME RECORDING AND ANALYSIS PANEL (STRAP) IN THE CONTROL BUILDING FOR ANALYSIS AND DISPLAY (OR PRINTOUT) OF THE ANALYSIS RESULTS.
15. USE OF EITHER PARALLEL OR SERIAL LINKS TO/FROM THE ROD SERVER MODULE TO THE INVERTER CONTROLLER IS PERMITTED. THE FINAL CONFIGURATION IS DETERMINED DURING DETAILED DESIGN.
16. MULTI-CHANNEL ROD BLOCK MONITOR IS PART OF NMS IT IS A DUAL CHANNEL AND INTERFACES WITH RAPI A/B RESPECTIVELY.
17. ADDITIONAL INVERTER CONTROL SIGNALS ARE THOSE ADDITIONAL SIGNALS REQUIRED TO ASSURE PROPER MOTOR CONTROL AND DEPEND ON THE DETAILED INVERTER DESIGN.
18. THE ADDITIONAL INVERTER CONTROL SIGNALS ARE NOT SHOWN. DETAIL CONFIGURATION DEPENDS ON THE DETAIL INVERTER DESIGN ALSO PROTECTION DESIGN MAY DIFFER BASED ON DETAILED INVERTER DESIGN.
19. AN ISOLATED HARDWIRED OUTPUT SHALL BE PROVIDED TO STRPS FOR SCRAM TEST TIME TAGGING FUNCTION OF THE RC&IS. THE STATUS OF THESE SIGNALS SHALL CHANGE TO ACTIVE ONLY WHEN A SINGLE HCU SCRAM TEST HAS BEEN ACTIVATED (IE WHENEVER THE POSITION OF ANY SCRAM TEST SWITCH FOR A SINGLE HCU HAS BEEN CHANGED FROM THE "NORMAL" TO THE "TEST" POSITION).
20. THE PLANT DATA NETWORK PROVIDES THE PLANT STATUS INFORMATION OF THE FOLLOWING SYSTEMS TO RACS (PRIMARILY ATLM-A AND ATLM-B). CONTROL ROD DRIVE SYSTEM FEEDWATER CONTROL SYSTEM RECIRCULATION FLOW CONTROL SYSTEM STEAM BYPASS AND PRESSURE CONTROL SYSTEM REACTOR WATER CLEANUP SYSTEM.
21. SYNCHRO A POSITION BUFFER CONTAINS SAME DIGITAL REPRESENTATION OF THE SYNCHRO A POSITION AS USED IN ROD SERVER PROCESSING CHANNEL A. ROD SERVER PROCESSING CHANNEL B CAN READ SYNCHRO A POSITION DATA VIA THIS BUFFER INTERFACE. SIMILAR CAPABILITY EXISTS FOR ROD SERVER PROCESSING CHANNEL A TO READ SYNCHRO B POSITION DATA.
22. FOR ARI, SCRAM FOLLOWING AND SCRRI FUNCTIONS, AUTOMATIC RESTART CAPABILITY SHALL BE INCLUDED.
23. EXACT SPEED PATTERNS TO ACHEIVE ROD MOVEMENT ARE TO BE DETERMINED IN DETAILED DESIGN. THESE PATTERNS ARE TYPICAL.
24. OVER CURRENT DETECTION AND PROTECTION FUNCTION (OR SIMILAR DEVICES OR FUNCTION) SHALL BE PROVIDED FOR THE INVERTER POWER OUTPUT PROTECTION.
25. FUSES AND/OR CIRCUIT BREAKERS (OR SIMILAR PROTECTION DEVIDES) SHALL BE INCLUDED FOR THE DC POWER SUPPLY FOR PROTECTION OF THE INCOMING POWER BUS.
26. FUSES AND/OR CIRCUIT BREAKERS SHALL BE PROVIDED FOR EACH SMDM POWER INPUT FOR PROTECTION OF THE INCOMING POWER BUS, AND FOR PERFORMING INDIVIDUAL SMDM MAINTENANCE.
27. THE SYNCHRO A RECIVES ITS EXCITATION POWER FROM THE UPS-A VIA ITS ASSOCIATED SYNCHRO CONVERTER.
28. THE SYNCHRO B RECEIVES ITS EXCITATION POWER FROM THE UPS-B VIA ITS ASSOCIATED SYNCHRO CONVERTER.
29. THE ROD BRAKE CONTROLLER'S POWER SUPPLIES SHALL PROVIDE CONTINUOUS STATUS FEEDBACK SIGNALS TO RAPI AUXILIARY PANELS.
30. HARDWARE LOGIC IS USED IN ADDITION TO THE RAPI CHANNEL A AND RAPI CHANNEL B LOGIC FOR ACTIVATING EMERGENCY INSERTION THE HARDWARE LOGIC IS BASED ON TWO-OUT-OF-FOUR LOGIC FOR THE RPS SCRAM FOLLOWING SIGNALS AND TWO-OUT-OF-THREE LOGIC FOR THE RFCS EMERGENCY INSERTION SIGNALS IN ADDITION. THERE ARE 6 SETS OF POWER FEED/RETURN(S) FOR THIS HARDWARE LOGIC. THIS IS WHY 12 SEPARATE SIGNALS ARE NEEDED FROM EACH RFCS CHANNEL AND 24 SIGNALS FROM EACH OF RPS DIVISION II AND DIVISION III.
31. THE RC&IS MUX MONITOR FOR RECIRCULATION RUNBACK PROVIDES FOR AUTOMATIC RECIRCULATION FLOW RUNBACK AFTER DETECTION OF AN ALL FMCRD RUN-IN CONDITION BEING ACTIVATED. THE COMMAND SIGNALS FROM RAPI CHANNEL A AND RAPI CHANNEL B ARE MONITORED FOR DETECTING THIS CONDITION.
32. HCU VALVE 143 IS TO BE OPENED UPON INSERTION OF THE FMCRD BY THE MOTOR. RAPI AUXILIARY PANELS PROVIDE ENERGIZATION POWER TO THE PURGE VALVES.
33. THE RAPI SIGNAL INTERFACE UNIT FOR EACH RAPI CHANNEL RECEIVES SIGNALS FROM THE SAFETY SYSTEMS. ALL SIGNALS FROM THE SAFETY SYSTEMS TO THE RCIS ARE OPTICALLY ISOLATED.

SUPPLEMENTAL DOCUMENT UNDER THE FOLLOWING IDENTITIES ARE TO BE USED IN CONJUNCTION WITH THIS DRAWING:

1. PROCESS COMPUTER FUNCTION
2. REACTOR PROTECTION SYSTEM
3. NEUTRON MONITORING SYSTEM
4. RECIRCULATION FLOW CONTROL SYSTEM
5. REACTOR PROTECTION SYSTEM
6. REFUELING PLATFORM CONTROL COMPUTER SYSTEM
7. INSTRUMENT AND CONTROL POWER SUPPLY
8. ELECTRICAL POWER DISTRIBUTION SYSTEM
9. CONTROL ROD DRIVE SYSTEM
10. AUTOMATIC POWER REGULATOR SYSTEM

LEGEND:

- ISOLATOR
- FIBER OPTIC AND/OR HARDWIRED MULTIPLEXING COMMUNICATION LINKS
- INTERFACE CONNECTION WITH SUITABLE ISOLATION (OPTIC)
- HARDWIRE INTERFACE CONNECTION

Figure 7.7-2 Rod Control and Information System IED (Sheet 1 of 5)

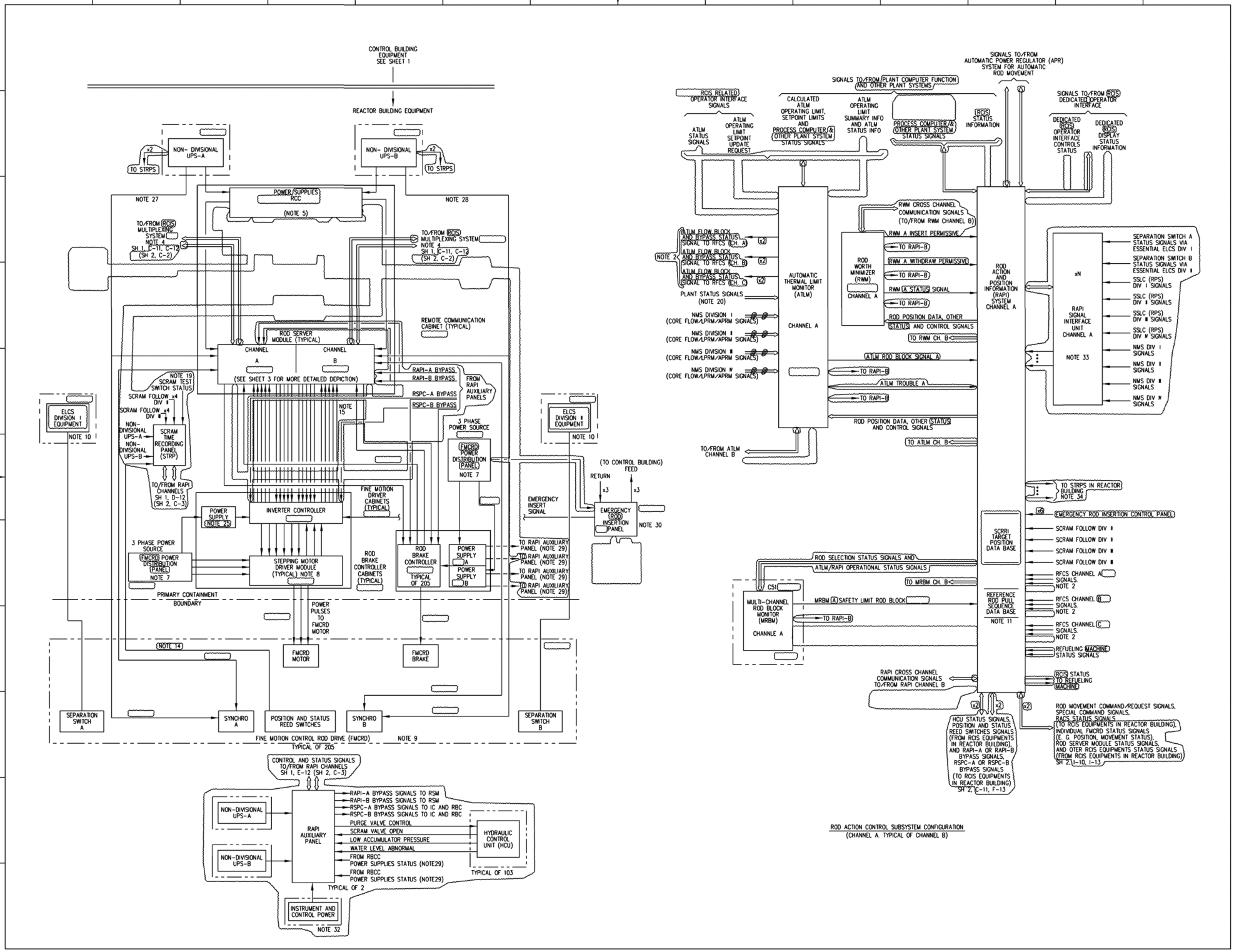

Figure 7.7-2 Rod Control and Information System IED (Sheet 2 of 5)

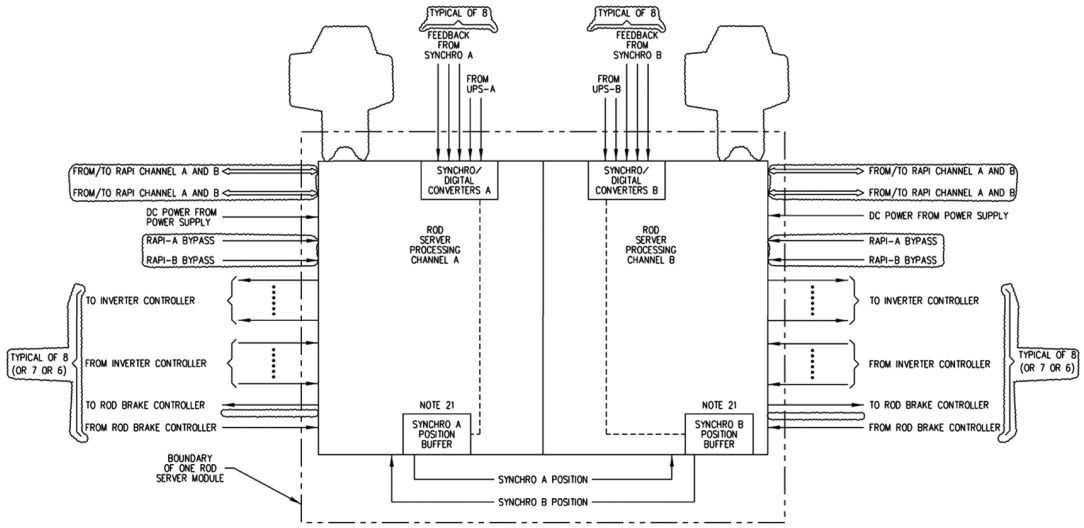

ROD SERVER MODULE CONFIGURATION (TYPICAL OF 26)

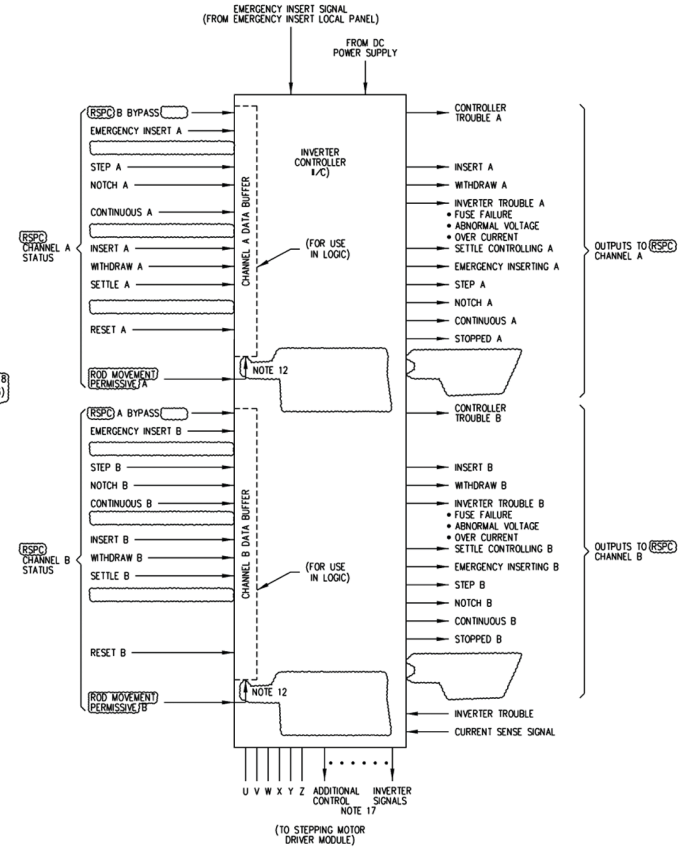

INVERTER CONTROLLER CONFIGURATION (TYPICAL OF 205)

Figure 7.7-2 Rod Control and Information System IED (Sheet 3 of 5)

STP 3&4 Rev. 2

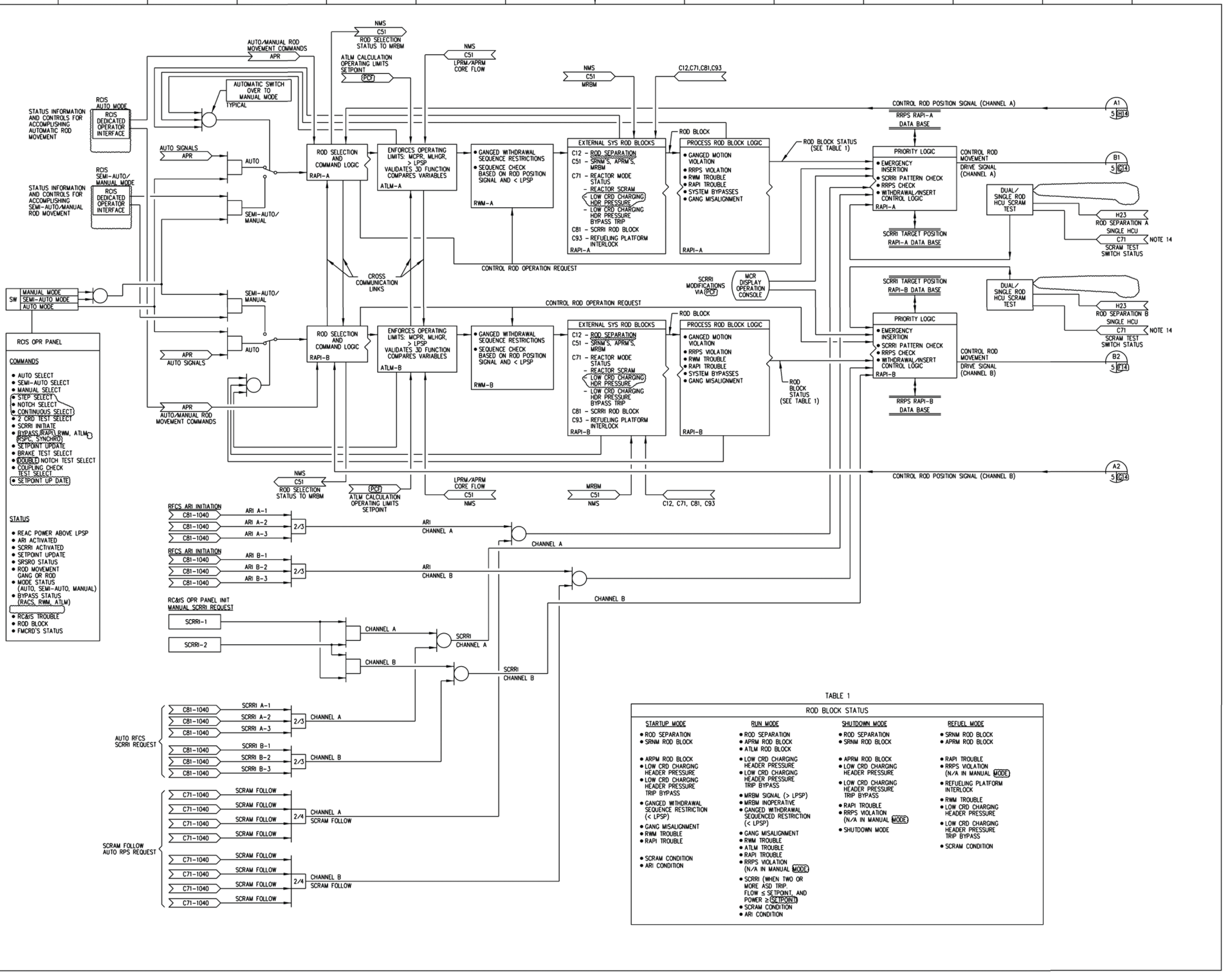

TABLE 1

ROD BLOCK STATUS

STARTUP MODE	RUN MODE	SHUTDOWN MODE	REFUEL MODE
• ROD SEPARATION • SRNM ROD BLOCK • ARPM ROD BLOCK • LOW CRD CHARGING HEADER PRESSURE • LOW CRD CHARGING HEADER PRESSURE TRIP BYPASS • GANGED WITHDRAWAL SEQUENCE RESTRICTION (< LPSP) • GANG MISALIGNMENT • RWM TROUBLE • RAPI TROUBLE • SCRAM CONDITION • ARI CONDITION	• ROD SEPARATION • APRM ROD BLOCK • ATLM ROD BLOCK • LOW CRD CHARGING HEADER PRESSURE • LOW CRD CHARGING HEADER PRESSURE TRIP BYPASS • MRBM SIGNAL (> LPSP) • MRBM INOPERATIVE • GANGED WITHDRAWAL SEQUENCED RESTRICTION (< LPSP) • GANG MISALIGNMENT • RWM TROUBLE • ATLM TROUBLE • RAPI TROUBLE • RRPS VIOLATION (N/A IN MANUAL MODE) • SCRRI (WHEN TWO OR MORE ASD TRIP. FLOW ≤ SETPOINT, AND POWER ≥ SETPOINT) • SCRAM CONDITION • ARI CONDITION	• ROD SEPARATION • SRNM ROD BLOCK • APRM ROD BLOCK • LOW CRD CHARGING HEADER PRESSURE • LOW CRD CHARGING HEADER PRESSURE TRIP BYPASS • RAPI TROUBLE • RRPS VIOLATION (N/A IN MANUAL MODE) • SHUTDOWN MODE	• SRNM ROD BLOCK • APRM ROD BLOCK • RAPI TROUBLE • RRPS VIOLATION (N/A IN MANUAL MODE) • REFUELING PLATFORM INTERLOCK • RWM TROUBLE • LOW CRD CHARGING HEADER PRESSURE • LOW CRD CHARGING HEADER PRESSURE TRIP BYPASS • SCRAM CONDITION

Figure 7.7-2 Rod Control and Information System IED (Sheet 4 of 5)

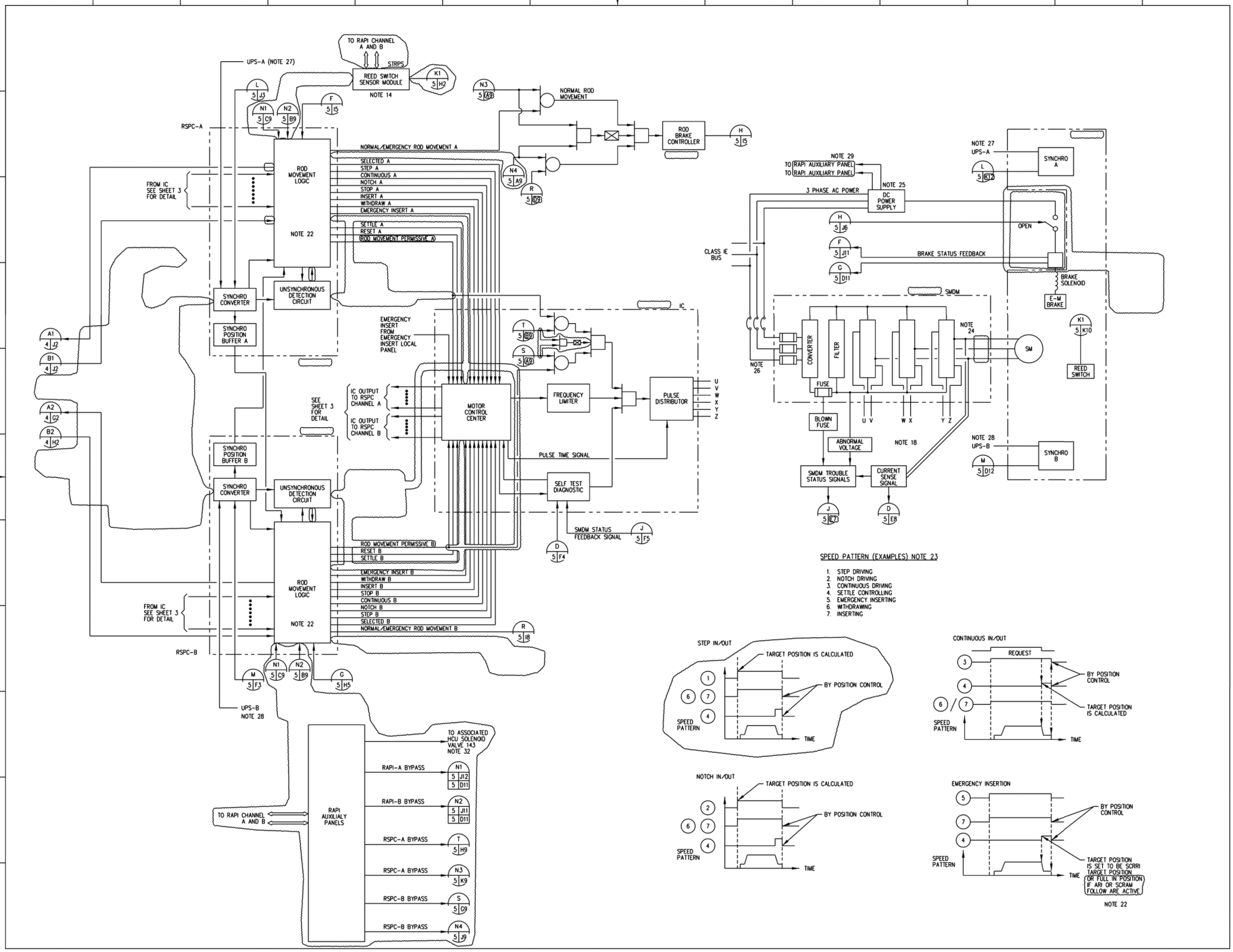

Figure 7.7-2 Rod Control and Information System IED (Sheet 5 of 5)

STP 3&4 Rev. 2

ABWR CERTIFICATION PROGRAM

TABLE OF CONTENTS

SH NO.	TITLE
1	COVER
2	TABLE OF CONTENTS
3-32	ROD ACTION & POSITION INFORMATION LOGIC
33-37	DEDICATED OPERATOR INTERFACE LOGIC
37A-53	ROD SERVER PROCESSING CHANNEL LOGIC
54-59	INVERTER CONTROLLER LOGIC
59	NOTES
60-67	AUTOMATIC THERMAL LIMIT MONITOR LOGIC
68-87	ROD WORTH MINIMIZER LOGIC

FIGURE 7.7-3 ROD CONTROL AND INFORMATION SYSTEM IBD (Sheet 1 of 87)

NOMENCLATURE

1. EXCEPT WHERE SHOWN OTHERWISE. THIS IBD REPRESENTS THE LOGIC OF RAPI CHANNEL-A. RSPC-A. ATLM CHANNEL-A AND RWM CHANNEL-A.
2. ALL OUTPUTS ARE LOGIC "1" FOR THE STATED OUTPUT CONDITION IN THE "OUTPUT DESCRIPTION" COLUMN.
3. THE S-R FLIP-FLOPS ARE SET AND RESET BY POSITIVE LOGIC.
4. "A" - REPRESENTS AN ANALOG SIGNAL.
   "B" - REPRESENTS A SIGNAL INTERNAL TO RCIS.
   "D" - REPRESENT A SIGNAL COMING TO OR GOING FROM RCIS FROM/TO ANOTHER SYSTEM.
   "L" - REPRESENTS STATUS INFORMATION FOR THE OPERATOR.
   "ANN" - REPRESENTS INFORMATION THAT IS ANNUNCIATED.
5. MORE THAN ONE INPUT SIGNAL NUMBER IN THE SIGNAL ID COLUMN IMPLIES THE "OR" ING OF THOSE SIGNALS.

SUPPLEMENTAL DOCUMENTS UNDER THE FOLLOWING IDENTITIES ARE TO BE USED IN CONJUNCTION WITH THIS DRAWING.

1. PROCESS COMPUTER FUNCTION
2. CONTROL ROD DRIVE SYSTEM
3. AUTOOMATIC POWER REGULATOR SYSTEM
4. REACTOR PROTECTION SYSTEM
5. FEEDWATER CONTROL SYSTEM
6. RECIRCULATION FLOW CONTROL SYSTEM
7. NEUTRON MONITORING SYSTEM
8. REFUELING PLATFORM CONTROL COMPUTER SYSTEM
9. REACTOR PROTECTION SYSTEM

LEGENDS:

⟹ - STREAM OF BINARY BITS

→ - ANALOG SIGNALS AND DISCRETE SIGNALS
IN CASE OF AN ANALOG SIGNAL.
"A" IS PLACED IN THE "CLASS" COLUMN.

NOMENCLATURE/REFERENCES

FIGURE 7.7-3 ROD CONTROL AND INFORMATION SYSTEM IBD (Sheet 2 of 87)

INPUT					LOGIC	OUTPUT			
REF SH	CLASS	SIGNAL ID	DESCRIPTION	COND-ITION		CLASS	DESCRIPTION	SIGNAL ID	REF SH
C71	D		LOW CRD HDR PRESS TRIP NOT BYPASSED DIV I	ON		D	LOW CRD HDR PRESS TRIP BYPASSED ROD BLOCK IDENTIFICATION	0310	PCF FD/C91
	D		LOW CRD HDR PRESS TRIP NOT BYPASSED DIV II	ON	3/4	B	LOW CRD HDR PRESS TRIP NOT BYPASSED	0301	18
	D		LOW CRD HDR PRESS TRIP NOT BYPASSED DIV III	ON					
	D		LOW CRD HDR PRESS TRIP NOT BYPASSED DIV IV	ON					
C51	D		NO SRNM ROD BLOCK DIV I	ON					
	D		NO SRNM ROD BLOCK DIV II	ON	3/4	B	NO SRNM ROD BLOCK	0302	18
	D		NO SRNM ROD BLOCK DIV III	ON					
	D		NO SRNM ROD BLOCK DIV IV	ON					
C51	D		NO APRM ROD BLOCK DIV I	ON		D	APRM ROD W/D BLOCK IDENTIFICATION	0309	PCF FD/C91
	D		NO APRM ROD BLOCK DIV II	ON	3/4	B	NO APRM ROD BLOCK	0303	18
	D		NO APRM ROD BLOCK DIV III	ON					
	D		NO APRM ROD BLOCK DIV IV	ON					
					TYP OF 205				
C12	D		N-TH ROD SEPARATION A SWITCH ACTIVATED	ON		B	N-TH ROD IS SEPARATED	0304	15,18
	D		N-TH ROD SEPARATION B SWITCH ACTIVATED	ON					
C31	D		REACTOR POWER IS BELOW LPSP	ON		B	REACTOR POWER IS BELOW LPSP	0305	10,17 18,69
C31	D		REACTOR POWER IS BELOW LPSP	ON	2/3				
C31	D		REACTOR POWER IS BELOW LPSP	ON					
						B		0308	DOI 33 *
						B	A SCRAM TEST SWITCH IS ACTIVATED	0306	15
C71	D		A SCRAM TEST SWITCH IS ACTIVATED DIV II	ON					

* DEDICATED OPERATOR INTERFACE

** FLAT PANEL DISPLAY

INPUT SIGNAL LOGIC

FIGURE 7.7-3 ROD CONTROL AND INFORMATION SYSTEM IBD (Sheet 3 of 87)

STP 3 & 4

Rev.2

INPUT					LOGIC	OUTPUT			
REF SH	CLASS	SIGNAL ID	DESCRIPTION	COND-ITION		CLASS	DESCRIPTION	SIGNAL ID	REF SH
C71	D		SCRAM FOLLOW FROM RPS DIV I	ON					
	D		SCRAM FOLLOW FROM RPS DIV II	ON	2/4	B	SCRAM FOLLOW CONDITION EXIST	0401	10,18
	D		SCRAM FOLLOW FROM RPS DIV III	ON					
	D		SCRAM FOLLOW FROM RPS DIV IV	ON		D	SCRAM FOLLOW CONDITION ROD WD BLOCK IDENTIFICATION	0409	PCF FD/C91
C71	D		REACTOR MODE SWITCH IN SHUTDOWN DIV I	ON					
	D		REACTOR MODE SWITCH IN SHUTDOWN DIV II	ON	2/4	B	REACTOR MODE SWITCH IN S/D	0402	18
	D		REACTOR MODE SWITCH IN SHUTDOWN DIV III	ON					
	D		REACTOR MODE SWITCH IN SHUTDOWN DIV IV	ON		D	REACTOR MODE SWITCH IN S/D ROD WD BLOCK IDENTIFICATION	0410	
C71	D		REACTOR MODE SWITCH IN REFUEL DIV I	ON					
	D		REACTOR MODE SWITCH IN REFUEL DIV II	ON	2/4	B	REACTOR MODE SWITCH IN REFUEL	0403	14,85, 30
	D		REACTOR MODE SWITCH IN REFUEL DIV III	ON					
	D		REACTOR MODE SWITCH IN REFUEL DIV IV	ON					
	D		REACTOR MODE SWITCH IN STARTUP DIV I	ON					
C71	D		REACTOR MODE SWITCH IN STARTUP DIV II	ON	2/4	B	REACTOR MODE SWITCH IN S/U	0404	69
	D		REACTOR MODE SWITCH IN STARTUP DIV III	ON					
	D		REACTOR MODE SWITCH IN STARTUP DIV IV	ON					
C71	D		REACTOR MODE SWITCH IN RUN DIV I	ON					
	D		REACTOR MODE SWITCH IN RUN DIV II	ON	2/4	B	REACTOR MODE SWITCH IN RUN	0405	17,18,69
	D		REACTOR MODE SWITCH IN RUN DIV III	ON					
	D		REACTOR MODE SWITCH IN RUN DIV IV	ON					
C51	D		MRBM-A ROD BLOCK	ON		B	MRBM-A ROD BLOCK	0406	18
C51	D		MRBM-B ROD BLOCK	ON		B	MRBM-B ROD BLOCK	0407	18

INPUT SIGNALS LOGIC

FIGURE 7.7-3 ROD CONTROL AND INFORMATION SYSTEM IBD (Sheet 4 of 87)

INPUT					LOGIC	OUTPUT			
REF SH	CLASS	SIGNAL ID	DESCRIPTION	COND-ITION		CLASS	DESCRIPTION	SIGNAL ID	REF SH
C81	D		SCRRI REQUEST FROM RFCS CH-A1	ON					
	D		SCRRI REQUEST FROM RFCS CH-A2	ON	2/3				
	D		SCRRI REQUEST FROM RFCS CH-A3	ON					
						B	SCRRI CONDITION EXISTS	0501	10,18
						D	SCRRI CONDITION ROD WD BLOCK IDENTIFICATION	0508	PCF FD/C91
DOI	B		SCRRI MANUAL SWITCH ACTIVATED-1	ON					
DOI	B		SCRRI MANUAL SWITCH ACTIVATED-2	ON					
C81	D		ROD WITHDRAWAL BLOCK REQ FROM RFCS-A1	ON		D	RFCS ROD WD BLOCK CONDITION IDENTIFICATION	0509	PCF FD/C91
	D		ROD WITHDRAWAL BLOCK REQ FROM RFCS-A2	ON	2/3	B	RFCS ROD WITHDRAW BLOCK REQUEST	0502	18
	D		ROD WITHDRAWAL BLOCK REQ FROM RFCS-A3	ON					
C81	D		ARI REQUEST FROM RFCS CH 1	ON					
	D		ARI REQUEST FROM RFCS CH 2	ON	2/3	B	ARI CONDITION EXISTS	0503	10,18
	D		ARI REQUEST FROM RFCS CH 3	ON		D	ARI MOD WD BLOCK CONDITION IDENTIFICATION	0510	PCF FD/C91
C12	D		LOW CRD CHARGING HDR PRESS DIV I	ON		D	LOW CRD CHARGING HDR PRESSURE ROD WD BLOCK IDENTIFICATION	0511	PCF FD/C91
	D		LOW CRD CHARGING HDR PRESS DIV II	ON	2/4	B	CRD CHARGING HDR PRESS IS LOW	0504	18
	D		LOW CRD CHARGING HDR PRESS DIV III	ON					
	D		LOW CRD CHARGING HDR PRESS DIV IV	ON					
C51	D		PERIOD BASED ROD WD PERMISSIVE DIV I	ON					
	D		PERIOD BASED ROD WD PERMISSIVE DIV II	ON	3/4	B	PERIOD BASED ROD WD PERMISSIVE	0505	18
	D		PERIOD BASED ROD WD PERMISSIVE DIV III	ON					
	D		PERIOD BASED ROD WD PERMISSIVE DIV IV	ON					

INPUT SIGNALS LOGIC

FIGURE 7.7-3 ROD CONTROL AND INFORMATION SYSTEM IBD (Sheet 5 of 87)

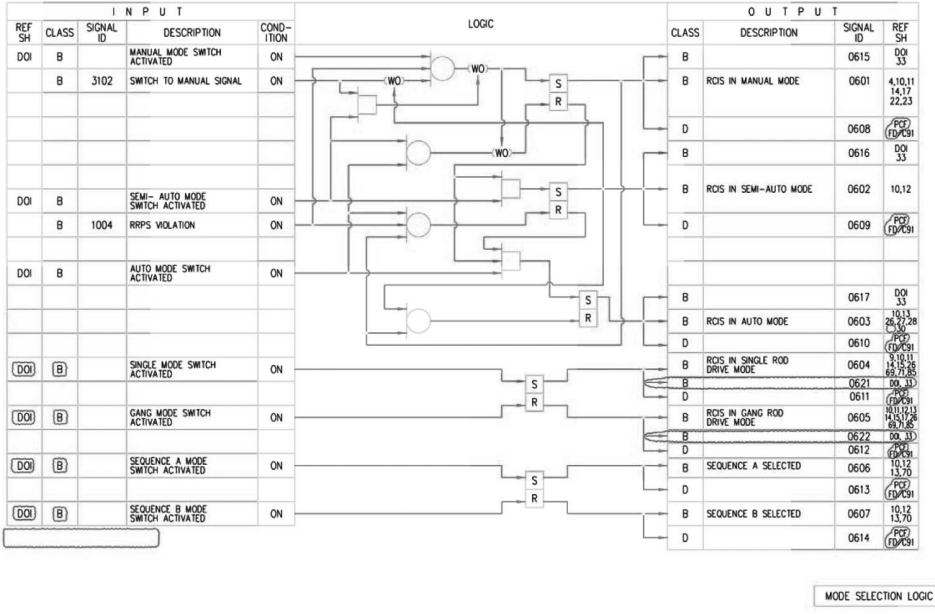

FIGURE 7.7-3 ROD CONTROL AND INFORMATION SYSTEM IBD (Sheet 6 of 87)

INPUT					OUTPUT			
REF SH	CLASS	SIGNAL ID	DESCRIPTION	COND-ITION	CLASS	DESCRIPTION	SIGNAL ID	REF SH
DOI	B		STEP DRIVE MODE SWITCH ACTIVATED	ON	B	RCIS IN STEP DRIVE MODE	0701	11,12 39,40
					B		0720	DOI 33A
					D		0710	PCF FD/C91
DOI	B		NOTCH DRIVE MODE SWITCH ACTIVATED	ON	B	RCIS IN NOTCH DRIVE MODE	0702	11,12 41,42
					B		0721	DOI 33A
					D		0711	PCF FD/C91
DOI	B		CONTINUOUS DRIVE MODE SWITCH ACTIVATED	ON	B	RCIS IN CONTINUOUS DRIVE MODE	0722	DOI 33A
					B	RCIS IN CONTINUOUS INSERT DRIVE MODE	0703	11,12,44
					D		0712	PCF FD/C91
					B	RCIS IN CONTINUOUS WITHDRAWAL DRIVE MODE	0704	11,12
					D		0713	PCF FD/C91
					B	RCIS IN STEP/NOTCH INSERT DRIVE MODE	0706	12,40 42
					D		0714	PCF FD/C91
DOI	B		INSERT MODE SWITCH ACTIVATED	ON				
					B	RCIS IN ROD INSERT MODE	0707	11,12 69,71
DOI	B		WITHDRAWAL MODE SWITCH ACTIVATED	ON				
					B	RCIS IN ROD WITHDRAWAL MODE	0708	11,12 69,71
					B	RCIS IN STEP/NOTCH WITHDRAWAL DRIVE MODE	0709	12,39 41
					D		0714	PCF FD/C91
	B	1202	WD/INS LIMIT OF SEQUENCE ACHIEVED	ON	D	WD/INS LIMIT OF RRPS ACHIEVED	0717	PCF FD/C91
	B	1901	ROD WITHDRAWAL PERMISSIVE	ON				
	B	2001	ROD INSERT PERMISSIVE	ON				

LOGIC

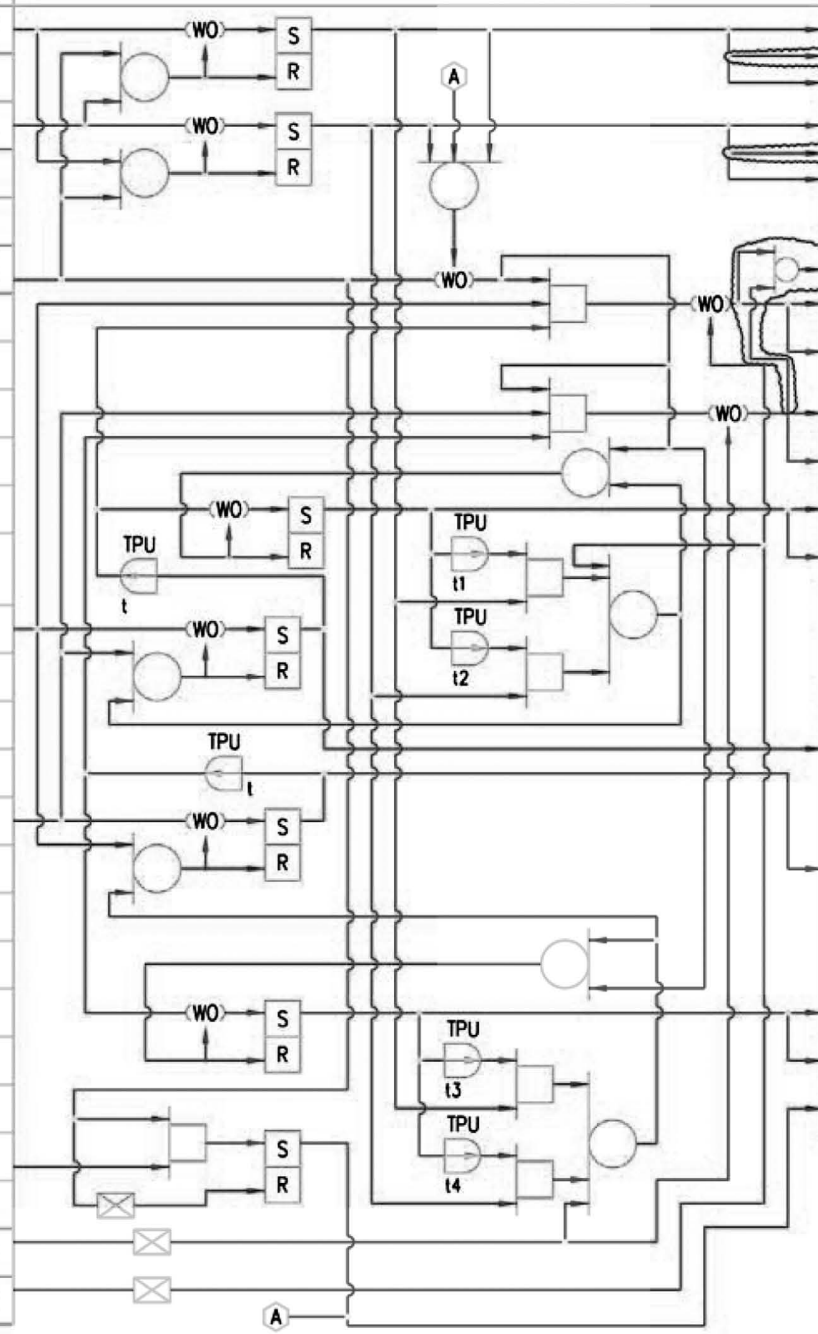

DRIVE MODE ACTIVATION LOGIC

FIGURE 7.7-3 ROD CONTROL AND INFORMATION SYSTEM IBD (Sheet 7 of 87)

INPUT					LOGIC	OUTPUT			
REF SH	CLASS	SIGNAL ID	DESCRIPTION	COND-ITION		CLASS	DESCRIPTION	SIGNAL ID	REF SH
DOI	B		CRDSTSS* PUT IN 1CRD/2CRD SCRAM TIME TEST POSITION	ON		B	CRDSTSS IN 1CRD/2CRD SCRAM TIME TEST	0801	14,15,85
						B		0812	DOI,34
						D		0813	PCF FD/C91
DOI	B		CRDSTSS PUT IN COUPLING CHECK POSITION	ON		B	CRDSTSS IN COUPLING CHECK	0802	14,15 85
						B		0814	DOI,34
						D		0815	PCF FD/C91
DOI	B		CRDSTSS PUT IN DOUBLE NOTCH TEST POSITION	ON		B	CRDSTSS IN 2-NOTCH TEST	0804	17
						B		0818	DOI,34
						D		0819	PCF FD/C91
DOI	B		CRDSTSS PUT IN IDLE POSITION	ON		B	CRDSTSS IN IDLE	0805	19
						B		0820	DOI,34
						D		0821	PCF FD/C91
DOI	B		OVERTRAVEL PERMIT	ON		B	OVERTRAVEL PERMIT	0806	11,14 39,41,43
DOI	B		OVERTRAVEL PERMIT CLEAR	ON		D		0823	PCF FD/C91
DOI	B		CRDSTMS ** PUT IN AUTO MODE	ON		B	CRDSTMS IN AUTO	0807	14,17
						B		0824	DOI,34
						D		0825	PCF FD/C91
						B		0826	DOI,34
DOI	B		CRDSTMS PUT IN MANUAL MODE	ON		B	CRDSTMS IN IDLE	0811	PCF FD/C91
						B		0827	DOI,35
						B	CRDSTMS IN MANUAL	0808	14
DOI	B		CRDSTMS PUT IN IDLE MODE	ON		D		0828	PCF FD/C91
						B		0829	DOI,35
						B	CRD SURVEILLANCE TEST STARTED	0809	14,17
						D		0830	PCF FD/C91
DOI	B		START CRD SURVEILLANCE TEST	ON		B		0831	DOI,35
DOI	B		STOP CRD SURVEILLANCE TEST	ON		B	CRD SURVEILLANCE TEST STOPPED	0810	10,14 17
						D		0832	PCF FD/C91

* CRD SURVEILLANCE TEST SELECTION SWITCH
** CRD SURVEILLANCE TEST MODE SWITCH

CRD SURVEILLANCE TEST SELECTION LOGIC

FIGURE 7.7-3 ROD CONTROL AND INFORMATION SYSTEM IBD (Sheet 8 of 87)

INPUT					OUTPUT			
REF SH	CLASS	SIGNAL ID	DESCRIPTION	COND-ITION	CLASS	DESCRIPTION	SIGNAL ID	REF SH
	B	0601	RCIS IN MANUAL MODE	ON				
	B	0604	RCIS IN SINGLE ROD DRIVE MODE	ON				
					B	SELECT REQUEST FOR RSPC-An	0901	38
DOI	B		SELECTION SWITCH OF N-TH ROD ACTIVATED	ON	B	OTHER RODS SELECT CLEAR	0905	9
	B	2415	RSPC-An SELECT ACK.	ON	B	THE N-TH ROD IS SELECTED	0902	38
		0904	A ROD IS SELECTED	ON				
					ANN	ROD SELECT TROUBLE	0903	
DOI	B		ROD SELECT CLEAR	ON				
	B	0905	OTHER RODS SELECT CLEAR	ON				
	B	0905	OTHER RODS SELECT CLEAR	ON				
DOI	B		RCIS RESET	ON				
					B	A ROD IS SELECTED	0904	9,11 14

LOGIC

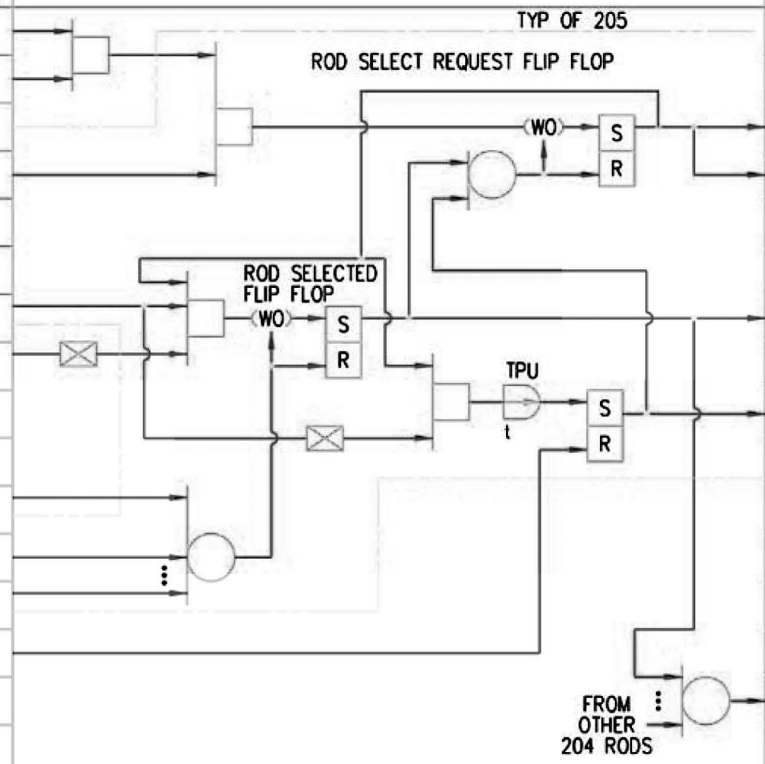

SINGLE ROD SELECTION AND VERIFICATION LOGIC AND AUTOMATIC ROD SELECTION LOGIC FOR BRAKE TEST

FIGURE 7.7-3 ROD CONTROL AND INFORMATION SYSTEM IBD (Sheet 9 of 87)

INPUT				
REF SH	CLASS	SIGNAL ID	DESCRIPTION	COND-ITION
	B	0604	RCIS IN SINGLE ROD DRIVE MODE	ON
	B	3004	INOP BYPASSED ROD(S) COORDINATES	ON
	B	0601	RCIS IN MANUAL MODE	ON
	B	0605	RCIS IN GANG ROD DRIVE MODE	ON
	B	1507	SELECT NEXT PAIR	ON
DOI	B		IDENTITY OF ROD SELECTION SWITCH ACTIVATED	ON
	B	1407	AUTO ROD SELECTION REQUEST IN REFUEL MODE FOR 2-CRD SCRAM TEST OR COUPLING CHECK	ON
	B	2415	RSPC-An SELECT ACK.	ON
			⋮	ON
	B	1409	MANUAL 2-CRD GANG SELECTION IN REFUEL MODE	ON
	B	1010	AUTO 2-CRD GANG SELECTION IN REFUEL MODE	ON
	B	1702	INITIATE AUTO GANG SELECTION FOR 2-NOTCH TEST	ON
DOI	B		ROD SELECT CLEAR	ON
DOI	B		RCIS RESET	ON
	B	1005	ONE GANG IS SELECTED	ON
	B	1011	GANG SELECT REQUEST ACTIVE	ON
	B	0606	SEQUENCE A SELECTED	ON
	B	0607	SEQUENCE B SELECTED	ON
	B	1311	SWITCH SEQUENCE SELECTION FOR 2-NOTCH TEST	ON
	B	0305	REACTOR POWER BELOW LPSP **	ON
	B	0602	RCIS IN SEMI-AUTO MODE	ON
	B	2401	ALL RODS POSITIONS	
	B	1201 1301	GANG "X" SELECTION REQUEXT FROM RM&SL *	
	B	0810	STOP AUTO ROD SELECTION FOR 2CRD SCRAM TEST OR COUPLING CHECK	ON
	B	0603	RCIS IN AUTO MODE	ON
	B	0501	SCRRI RODS GO IN EMERGENCY	ON
	B	0503	ARI CONDITION EXISTS	ON
	B	0401	SCRAM FOLLOW CONDITION EXISTS	ON
	B	1505	EMERGENCY INSERT	ON

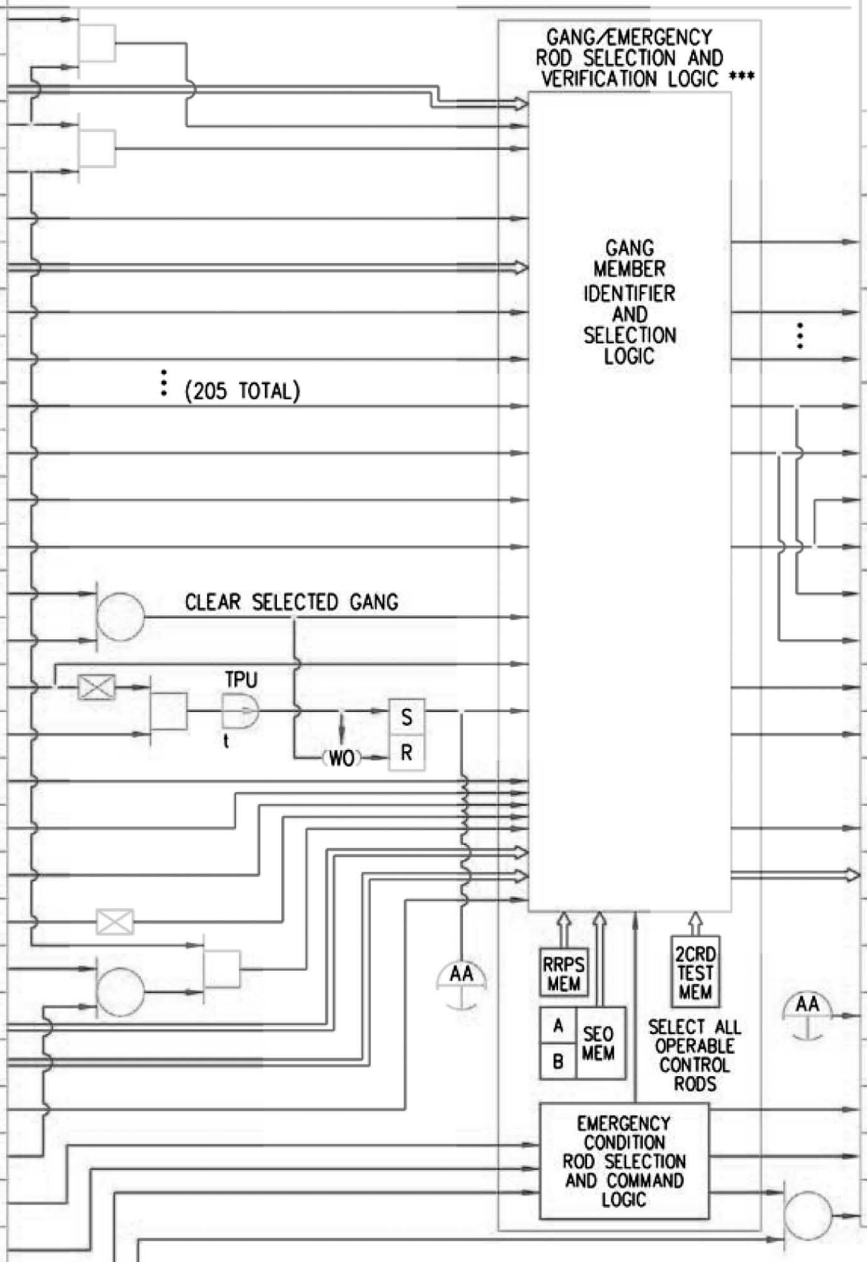

OUTPUT			
CLASS	DESCRIPTION	SIGNAL ID	REF SH
D	SIGNAL TO THE PROCESS COMPUTER TO MARK THE PREVIOUSLY SELECTED PAIR ON THE FD FOR SCRAM TEST COMPLETION INDICATION	1001	PCF FD/C91
B_1 ⋮ B_n	SELECT REQUEST FOR RSPCs OF GANG "X"	1002	RSPC-A1 ⋮ RSPC-An
B_1 ⋮ B_n	MEMBERS OF GANG "X" ARE SELECTED	1003	26,38 61,63 64,71 DOI
ANN			
B	RRPS VIOLATION	1004	6
D ⋮ D			PCF FD/C91
B	AUTO 2-CRD GANG SELECTION IN REFUEL MODE	1010	
B	ONE GANG IS SELECTED	1005	10,11 12,13
B	GANG SELECT REQUEST ACTIVE	1011	10
B	CURRENT RRPS STEP NUMBER	1012	12,13
ANN	GANG SELECT TROUBLE	1006	
B	SCRRI CONDITION EXISTS	1007	45
B	ALL OPERABLE RODS ARE SELECTED	1008	PCF FD/C91
B	EMERGENCY INSERT	1009	39,40,41 42,43,44 46

* ROD MOVEMENT AND SEQUENCING LOGIC
** THIS SIGNAL PREVENTS INADVERTENT SELECTION OF GROUPS 1,2,3,4 GANGED RODS ABOVE LPSP
*** FOR DETAILED DESCRIPTION OF THE ALGORITHMS OF THIS FUNCTION BLOCK. REFER TO NOTE 5.

GANG, EMERGENCY AND AUTO 2-CRD TEST ROD SELECTION LOGIC AND EMERGENCY INSERTION LOGIC

FIGURE 7.7-3 ROD CONTROL AND INFORMATION SYSTEM IBD (Sheet 10 of 87)

INPUT				
REF SH	CLASS	SIGNAL ID	DESCRIPTION	COND-ITION
	B	0701	(RCIS) IN STEP DRIVE MODE	ON
	B	0904	A ROD IS SELECTED	ON
	B	0601	RCIS IN MANUAL MODE	ON
	B	0604	RCIS IN SINGLE ROD DRIVE MODE	ON
	B	0702	RCIS IN NOTCH DRIVE MODE	ON
	B	0707	RCIS IN INSERT DRIVE MODE	ON
	B	0708	RCIS IN WITHDRAWAL DRIVE MODE	ON
	B	2403	SELECTED ROD POSITION	ON
	B	2409	SELECTED ROD SETTLING	ON
	B	0703	RCIS IN CONTINUOUS INSERT DRIVE MODE	ON
	B	0704	RCIS IN CONTINUOUS WITHDRAWAL DRIVE MODE	ON
	B	0806	OVERTRAVEL PERMIT	ON
	B	0605	RCIS IN GANG ROD DRIVE MODE	ON
	B	1005	ONE GANG IS SELECTED	ON
	B	2410	SELECTED GANG SETTLING	ON
	B	2404	SELECTED GANG ROD POSITIONS	

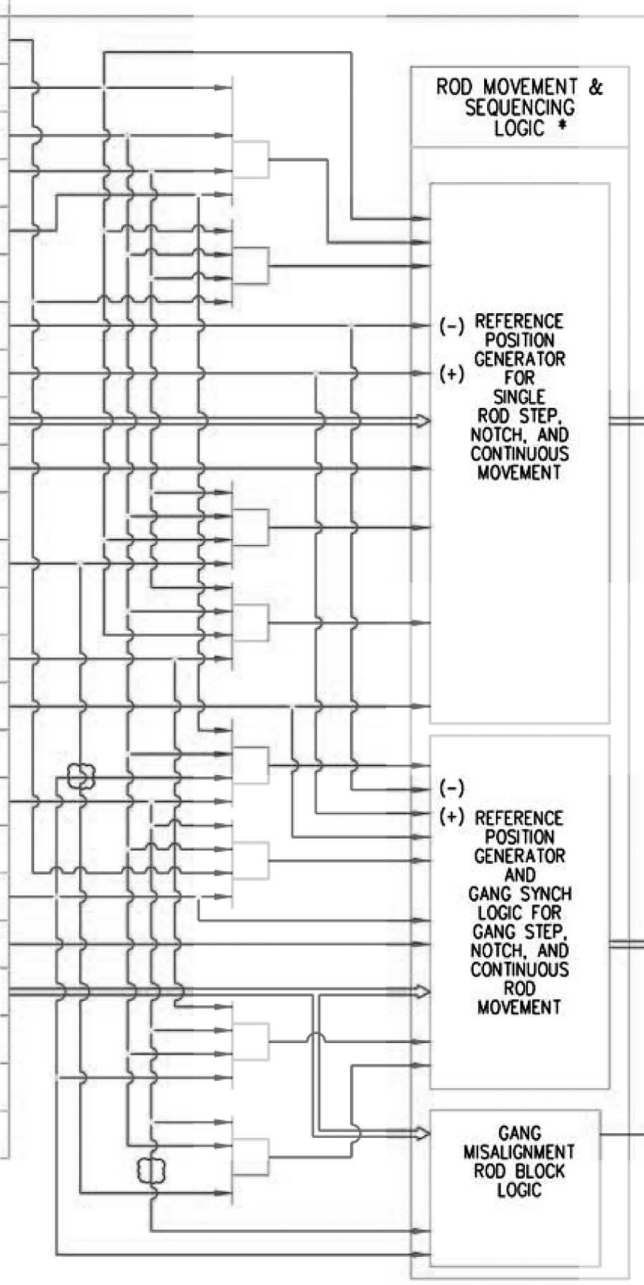

OUTPUT			
CLASS	DESCRIPTION	SIGNAL ID	REF SH
B	REFERENCE POSITION TO SELECTED RSPC- A	1101	39,40 41,42 43,44
B	REFERENCE POSITION TO THE RSPC'S OF SELECTED GANG	1102	39,40 41,42 43,44
B	GANG MISALIGNMENT ROD BLOCK	1103	18

* FOR DETAILED DESCRIPTION OF THE ALGORITHM OF THIS FUNCTION BLOCK. REFER TO NOTE 5.

ROD MOVEMENT AND SEQUENCING LOGIC FOR RCIS MANUAL MODE OF OPERATION

FIGURE 7.7-3 ROD CONTROL AND INFORMATION SYSTEM IBD (Sheet 11 of 87)

INPUT				
REF SH	CLASS	SIGNAL ID	DESCRIPTION	COND-ITION
	B	0602	RCIS IN SEMI-AUTO MODE	ON
	B	0605	RCIS IN GANG MODE	ON
	B	0701	RCIS IN STEP DRIVE MODE	ON
	B	0702	RCIS IN NOTCH DRIVE MODE	ON
	B	0709	RCIS IN STEP/NOTCH WITHDRAWAL MODE	ON
	B	0706	RCIS IN STEP/NOTCH INSERT MODE	ON
	B	1005	ONE GANG IS SELECTED	ON
	B	2410	SELECTED GANG SETTLING	ON
	B	0703	RCIS IN CONTINUOUS INSERT DRIVE MODE	ON
	B	0704	RCIS IN CONTINUOUS WITHDRAWAL DRIVE MODE	ON
	B	0707	RCIS IN INSERT DRIVE MODE	ON
	B	0708	RCIS IN WITHDRAWAL DRIVE MODE	ON
	B	1012	CURRENT RRPS STEP NUMBER	
	B	2404	SELECTED GANG RODS POSITIONS	
	B	0606	SEQUENCE A SELECTED	ON
	B	0607	SEQUENCE B SELECTED	ON

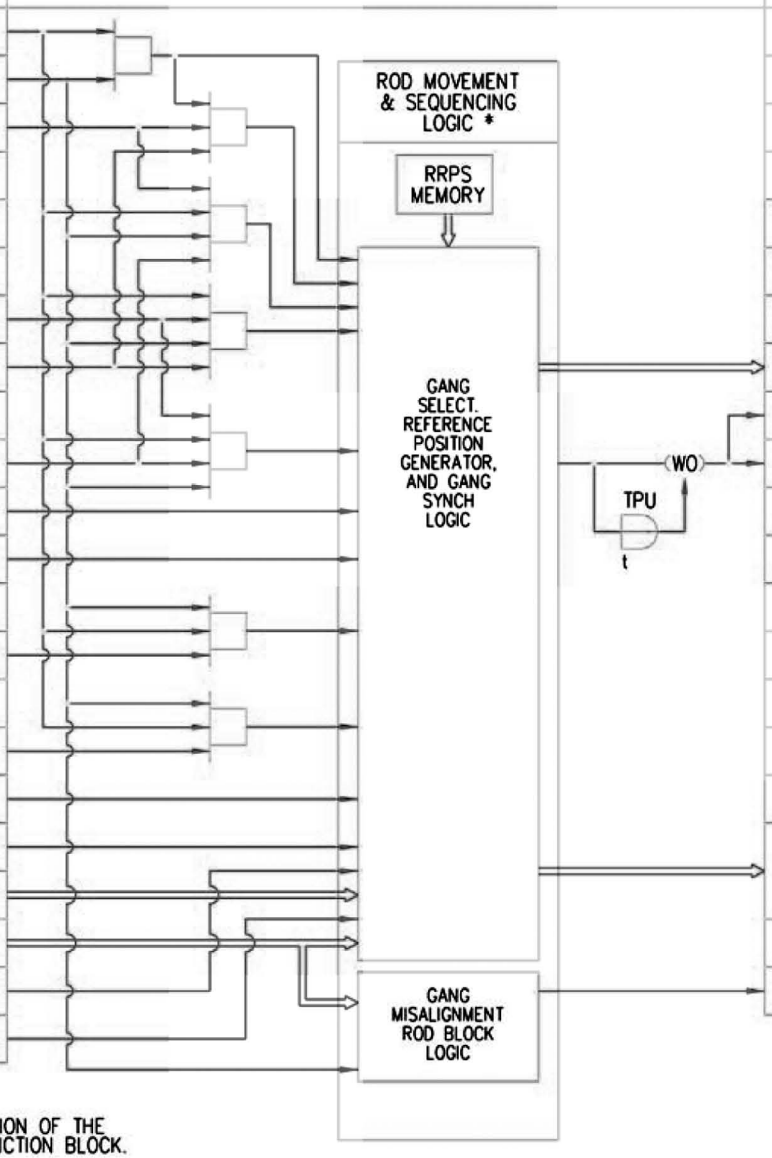

OUTPUT			
CLASS	DESCRIPTION	SIGNAL ID	REF SH
B	GANG "X" SELECTION REQUEST	1201	10
B		1202	7
D	WD/INSERT LIMIT OF SEQUENCE ACHIEVED	1203	PCF FD/C91
B	REFERENCE POSITION TO THE RSPC'S OF SELECTED GANG	1204	39,40 41,42 43,44
B	GANG MISALIGNMENT ROD BLOCK	1205	18

* FOR DETAILED DESCRIPTION OF THE ALGORITHM OF THIS FUNCTION BLOCK. REFER TO NOTE 5.

ROD MOVEMENT AND SEQUENCING LOGIC FOR RCIS SEMIAUTOMATIC MODE OF OPERATION

FIGURE 7.7-3 ROD CONTROL AND INFORMATION SYSTEM IBD (Sheet 12 of 87)

INPUT				
REF SH	CLASS	SIGNAL ID	DESCRIPTION	COND-ITION
	B	1702	INITIATE AUTO GANG SELEC-TION FOR 2-NOTCH TEST	ON
	B	0603	RCIS IN AUTOMATIC ROD MOVEMENT MODE	ON
	B	0605	RCIS IN GANG ROD DRIVE MODE	ON
C82	D		APR IN AUTO	ON
C82	D		APR IN ROD WITHDRAWAL MODE	ON
C82	D		APR IN ROD INSERT MODE	ON
C82	D		NORMAL SEQUENCE STROKE WD/INSERT REQUEST FROM APR	ON
C82	D		SEQUENCE SUBSTROKE WD/ INSERT REQUEST FROM APR	ON
C82	D		SEQUENCE STEP WD/INSERT REQUEST FROM APR	ON
	B	1005	ONE GANG IS SELECTED	ON
	B	2410	SELECTED GANG SETTLING	ON
	B	0606	SEQUENCE A SELECTED	ON
	B	0607	SEQUENCE B SELECTED	ON
	B	1012	CURRENT RRPS STEP NUMBER	
	B	2404	SELECTED GANG RODS POSITIONS	
	B	1901	ROD WITHDRAWAL PERMISSIVE	ON
	B	2001	ROD INSERT PERMISSIVE	ON

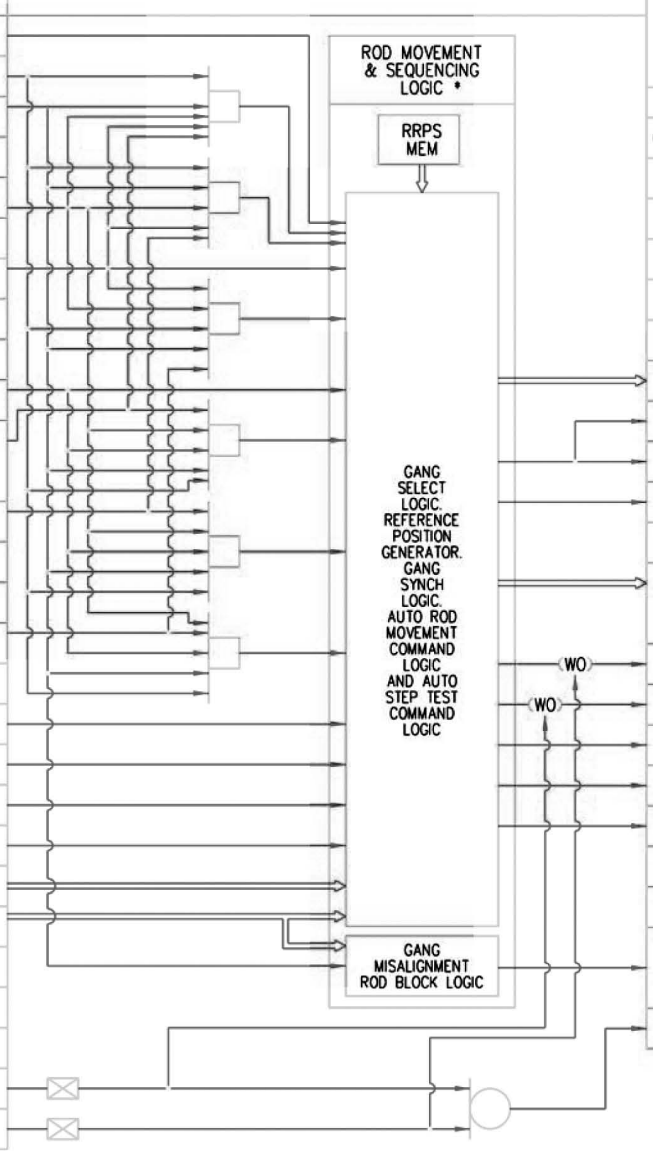

OUTPUT			
CLASS	DESCRIPTION	SIGNAL ID	REF SH
B	GANG "X" SELECTION REQUEST	1301	10
D		1312	(PCF) FD/ C91
B	2-NOTCH TEST COMPLETE	1302	17
B	SWITCH SEQUENCE SELEC-TION FOR 2-NOTCH TEST	1311	10
B	REFERENCE POSITION TO THE RSPC'S OF SELECTED GANG	1303	39,40 41,42 43,44
B	INSERT	1304	40,44
B	WITHDRAW	1305	39,43
B	CONTINUOUS	1306	43,44
B	STEP	1307	39,40
B	SELECTED GANG 2-NOTCH TEST UNSUCCESSFUL	1308	17
B	GANG MISALIGNMENT ROD BLOCK	1309	18
B	SWITCH TO MANUAL	1310	31

ROD MOVEMENT AND SEQUENCING LOGIC FOR RCIS AUTOMATIC MODE OF OPERATION AND LOGIC FOR AUTOMATIC 2-NOTCH TEST

* FOR DETAILED DESCRIPTION OF THE ALGORITHM OF THIS FUNCTION BLOCK, REFER TO NOTE 5.

FIGURE 7.7-3 ROD CONTROL AND INFORMATION SYSTEM IBD (Sheet 13 of 87)

INPUT				
REF SH	CLASS	SIGNAL ID	DESCRIPTION	COND-ITION
	B	0604	RCIS IN SINGLE ROD DRIVE MODE	ON
	B	0808	CRD STMS IN MANUAL *	ON
	B	0807	CRD STMS IN AUTO	ON
	B	0601	RCIS IN MANUAL MODE	ON
	D	0403	REACTOR MODE SWITCH IN REFUEL	ON
C93	D		REFUEL PLATFORM NOT OVER THE CORE	ON
C93	D		REFUEL GRAPPLE NOT LOADED	ON
	B	2406	ALL RODS FULL-IN (SYNCHRO FULL-IN)	ON
	B	0904	A ROD IS SELECTED	ON
	B	0801	CRD STSS IN 2CRD/1CRD SCRAM TIME TEST MODE **	ON
	B	0802	CRD STSS IN COUPLING CHECK MODE	ON
	B	2407	SELECTED ROD IS FULL-OUT	ON
	B	0806	OVERTRAVEL PERMIT	ON
	B	2459	SELECTED ROD IS AT POSITION 3728mm	ON
	B	0605	RCIS IN GANG ROD DRIVE MODE	ON
	B	2407	FIRST ROD OF SELECTED DUAL RODS FULL-OUT	ON
	B	2407	SECOND ROD OF SELECTED DUAL RODS FULL-OUT	ON
	B	2459	FIRST ROD OF SELECTED DUAL RODS AT POS 3728mm	ON
	B	2459	FIRST ROD OF SELECTED DUAL RODS AT POS 3728mm	ON
	B	0809	START	ON
	B	0810	STOP	ON

* CRD SURVEILLANCE TEST MODE SWITCH

** CRD SURVEILLANCE TEST SELECTION SWITCH

LOGIC

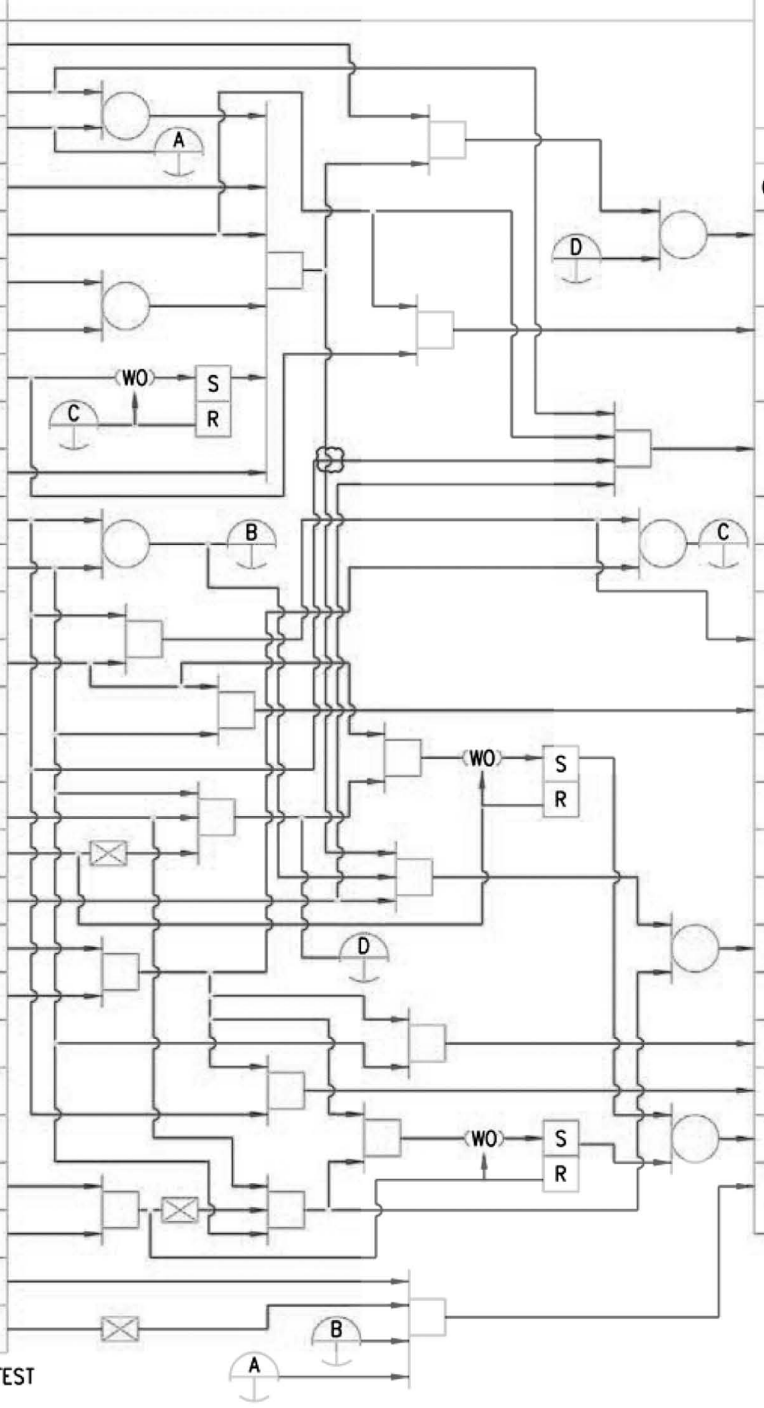

OUTPUT			
CLASS	DESCRIPTION	SIGNAL ID	REF SH
B	SINGLE ROD WITHDRAWAL PERMISSIVE IN REFUEL MODE	1401	19
B	RCIS PERMISSIVE SIGNAL FOR REFUEL PLATFORM MOVEMENT IN REFUEL	1402	C93
B	MANUAL 2-CRD GANG SELECTION IN REFUEL MODE	1409	10
D	READY FOR SINGLE ROD SCRAM TIME TEST	1403	PCF FD C91
D	READY FOR SINGLE ROD COUPLING CHECK	1408	PCF FD C91
B	DUAL ROD WITHDRAWAL PERMISSIVE IN REFUEL MODE	1404	
D	READY FOR DUAL ROD COUPLING CHECK	1405	PCF FD C91
D	READY FOR DUAL ROD SCRAM TIME TEST	1406	PCF FD C91
B	COUPLING CHECK ROD WITHDRAWAL PERMISSIVE	1410	18,19
B	AUTMATIC ROD SELECTION REQUEST FOR 2CRD TEST IN REFUEL MODE	1407	10

SINGLE/DUAL ROD SCRAM TIME TEST/COUPLING CHECK LOGIC IN REFUEL MODE

FIGURE 7.7-3 ROD CONTROL AND INFORMATION SYSTEM IBD (Sheet 14 of 87)

INPUT					LOGIC	OUTPUT			
REF SH	CLASS	SIGNAL ID	DESCRIPTION	COND-ITION		CLASS	DESCRIPTION	SIGNAL ID	REF SH
	B	0802	CRDSTSS IN COUPLING CHECK	ON	TYPICAL OF 205				
	B	0604	RC&IS IN SINGLE ROD DRIVE MODE	ON					
	B	0304	SELECTED ROD IS SEPATATED	ON		B	SELECTED SINGLE ROD COUPLING IS OK	1501	DOI 33A
	B	2459	SELECTED ROD AT POS 3728mm	ON					
	B	2460	SELECTED ROD OVER-TRAVEL SWITCH ACTIVATED	ON		B	SELECTED ROD IS UNCOUPLED	1502	DOI 33A
	B	0801	CRDSTSS IN 2CRD/1CRD SCRAM TIME TEST MODE	ON					
	B	0304	THE FIRST OF THE SELECTED DUAL RODS IS SEPARATED	ON	TYPICAL OF 103				
	B	0304	THE SECOND OF THE SELECTED DUAL RODS IS SEPARATED	ON					
	B	0605	RC&IS INS GANG ROD DRIVE MODE	ON		B	SELECTED DUAL RODS COUPLING IS OK	1503	DOI 33A
	B	2459	THE FIRST ROD OF THE DUAL SELECTED RODS IS AT POSITION 3728mm	ON					
	B	3809	THE SECOND ROD OF THE DUAL SELECTED RODS IS AT POSITION 3728mm	ON					
	B	2460	OVERTRAVEL SWITCH OF THE FIRST ROD OF THE DUAL SELECTED RODS ACTIVATED	ON					
	B	2460	OVERTRAVEL SWITCH OF THE SECOND ROD OF THE DUAL SELECTED RODS ACTIVATED	ON		B	ONE OF THE SELECTED DUAL RODS IS UNCOUPLED	1504	DOI 33A
	B	0306	A SCRAM TEST SWITCH IS ACTIVATED	ON		B	EMERGENCY INSERT	1505	10
					TPU t	B	SELECT NEXT PAIR	1507	10

SINGLE/DUAL ROD(S) COUPLING CHECK STATUS LOGIC AND SCRAM TIME TEST EMERGENCY INSERT LOGIC

FIGURE 7.7-3 ROD CONTROL AND INFORMATION SYSTEM IBD (Sheet 15 of 87)

THIS PAGE IS INTENTIONALY
LEFT BLANK

FIGURE 7.7-3 ROD CONTROL AND INFORMATION SYSTEM IBD (Sheet 16 of 87)

INPUT					LOGIC	OUTPUT			
REF SH	CLASS	SIGNAL ID	DESCRIPTION	COND-ITION		CLASS	DESCRIPTION	SIGNAL ID	REF SH
	B	0601	RCIS IN MANUAL ROD MOVEMENT MODE	ON					
	B	0605	RCIS IN GANG ROD DRIVE MODE	ON					
						B	ROD WITHDRAWAL PERMISSIVE FOR 2-NOTCH TEST	1701	19
	B	0405	REACTOR MODE SWITCH IN RUN	ON					
	B	0305	REACTOR POWER BELOW LPSP	ON					
	B	0804	CRD STSS IN 2-NOTCH TEST	ON					
	B	0807	CRD STMS IN AUTO	ON					
	B	0809	START	ON	S	B	INITIATE AUTO GANG SELECTION FOR 2-NOTCH TEST	1702	10 13,26
	B	0810	STOP	OFF	R				
	B	1308	SELECTED GANG 2-NOTCH TEST UNSUCCESSFUL	ON	S	ANN		1703	
	B	1302	2-NOTCH TEST COMPLETE	ON	R				
DOI	B		RCIS RESET	ON					

AUTOMATIC 2-NOTCH TEST LOGIC

FIGURE 7.7-3 ROD CONTROL AND INFORMATION SYSTEM IBD (Sheet 17 of 87)

INPUT				
REF SH	CLASS	SIGNAL ID	DESCRIPTION	COND-ITION
	B	2416	THE N-TH ROD IS SELECTED	ON
	B	0304	THE N-TH ROD IS SEPARATED	ON
	B	1103	GANG MISALIGNMENT ROD BLOCK	ON
	B	1205	GANG MISALIGNMENT ROD BLOCK	ON
	B	1309	GANG MISALIGNMENT ROD BLOCK	ON
	B	0302	NO SRNM ROD BLOCK	ON
	B	0405	REACTOR MODE SWITCH IN RUN	ON
	B	0303	NO APRM ROD BLOCK	ON
	B	0402	REACTOR MODE SWITCH IN SHUT DOWN	ON
	B	0301	LOW CRD CHARGING HDR PRESS TRIP NOT BYPASSED	ON
	B	0504	CRD CHARGING HDR PRESS IS LOW	ON
	B	0502	RFCS WITHDRAWAL BLOCK REQUEST	ON
	B	0305	REACTOR POWER BELOW LPSP	ON
	B	0406	MRBM-A ROD BLOCK	ON
	B	0407	MRBM-B ROD BLOCK	ON
	B	0505	PERIOD BASED ROD WD PERMISSEIVE	ON
	B	1410	COUPLING CHECK ROD WITHDRAWAL PERMISSIVE	ON
	B	0403	REACTOR MODE SWITCH IN REFUEL	ON
	B	8301	RWM ROD WITHDRAWAL PERMISSIVE	ON
	B	8503	RWM-A TROUBLE	ON
	B	2105	RWM-A BYPASSED	ON
	B	3201	RAPI-A TROUBLE	ON
	B	6709	ATLM-A TROUBLE	ON
	B	3105	ATML-A ROD WD BLOCK SIGNAL TO RAPI-A	ON
	B	2103	ATML-A BYPASSED	ON
	B	0501	SCRRI CONDITION EXISTS	ON
	B	0503	ARI CONDITION EXISTS	ON
	B	0401	SCRAM FOLLOW CONDITION EXISTS	ON

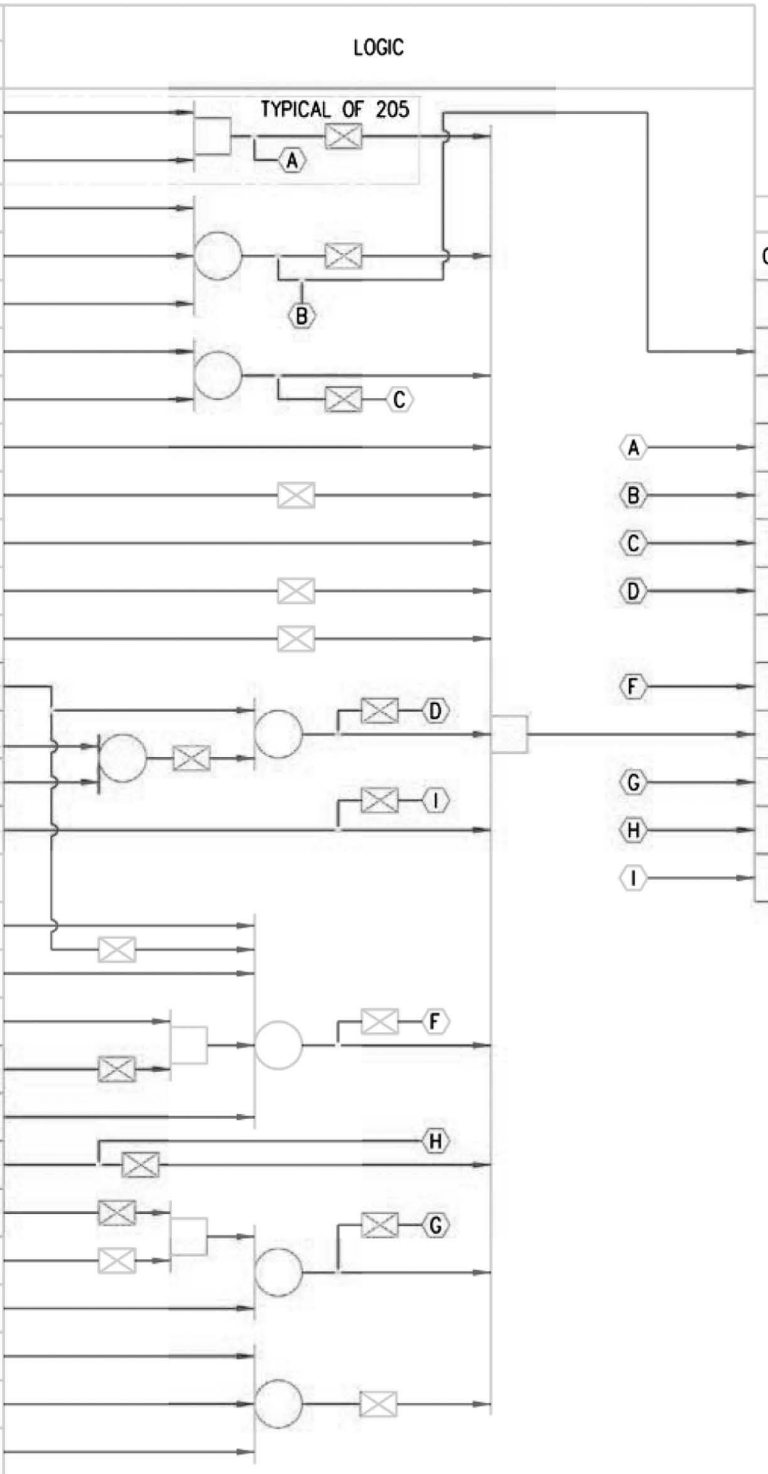

OUTPUT				
	CLASS	DESCRIPTION	SIGNAL ID	REF SH
	ANN	GANG MISALIGNMENT ROD WD BLOCK	1802	
A	D	ROD SEPARATION ROD WD BLOCK CONDITION IDENT	1803	PCF FD/C91
B	D	GANG MISALIGNMENT ROD WD BLOCK CONDITION IDENT	1804	PCF FD/C91
C	D	SRNM ROD WD BLOCK CONDITION IDENT	1805	PCF FD/C91
D	D	MRBM ROD WD BLOCK CONTDITION IDENT	1806	PCF FD/C91
F	D	RWM ROD WD BLOCK CONDITION IDENT	1808	PCF FD/C91
	B	ROD WITHDRAWAL PERMISSIVE NO.1	1801	19
G	D	ATLM-A TROUBLE/ROD WD BLOCK CONDITION IDENT	1809	PCF FD/C91
H	D	RAPI-A TROUBLE ROD WD BLOCK CONDITION IDENT	1810	PCF FD/C91
I	D	PERIOD BASED ROD WD BLOCK CONDITION IDENT	1811	PCF FD/C91

ROD WITHDRAWAL PERMISSIVE LOGIC 1/2

FIGURE 7.7-3 ROD CONTROL AND INFORMATION SYSTEM IBD (Sheet 18 of 87)

INPUT					LOGIC	OUTPUT			
REF SH	CLASS	SIGNAL ID	DESCRIPTION	COND-ITION		CLASS	DESCRIPTION	SIGNAL ID	REF SH
	B	8503	RWM-A TROUBLE	ON					
	B	1401	SINGLE ROD WITHDRAWAL PERMISSIVE IN REFUEL MODE	ON					
	B	8501	RWM SINGLE ROD WD PERMISSIVE IN REFUEL MODE	ON					
	B	1404	DUAL ROD WITHDRAWAL PERMISSIVE IN REFUEL MODE	ON		D	CRD SURVEILLANCE TEST RELATED ROD WD BLOCK CONDITION IDENTIFICATION	1903	PCF FD/ C91
	B	8502	RWM DUAL ROD WD PERMISSIVE IN REFUEL MODE FOR DUAL CRD SCRAM TIME TEST	ON					
	B	1410	COUPLING CHECK ROD WITHDRAWAL PERMISSIVE	ON					
	B	1701	ROD WITHDRAWAL PER-MISSIVE FOR 2-NOTCH TEST	ON					
	B	0805	CRD SURVEILLANCE TEST SELECTION SWITCH IN IDLE	ON		B	ROD WITHDRAWAL PERMISSIVE	1901	7,13 39,41 43,50
						L		1906	DOI
						ANN		1902	
	B	1801	ROD WITHDRAWAL PERMISSIVE NO.1	ON					
	B	3701	2-CHANNEL DISAGREEMENT	ON					

ROD WITHDRAWAL PERMISSIVE LOGIC 2/2

FIGURE 7.7-3 ROD CONTROL AND INFORMATION SYSTEM IBD (Sheet 19 of 87)

INPUT					LOGIC	OUTPUT			
REF SH	CLASS	SIGNAL ID	DESCRIPTION	COND-ITION			CLASS	DESCRIPTION	SIGNAL ID	REF SH
	B	3201	RAPI-A TROUBLE	ON			L		2007	DOI
							ANN		2008	
	B	0305	REACTOR POWER IS BELOW LPSP	ON			B	ROD INSERT PERMISSIVE	2001	7
	B	8401	RWM ROD INSERT PERMISSIVE	ON						
	B	2105	RWM-A BYPASSED	ON		B	D	RAPI-A TROUBLE INSERT BLOCK CONDITION IDENTIFICATION	2003	PCF FD/ C91
	B	8503	RWM-A TROUBLE	ON		C	D	RWM-A TROUBLE INSERT BLOCK CONDITION IDENTIFICATION	2004	PCF FD/ C91
	B	2103	ATLM-A BYPASSED	ON		D	D	ATLM-A TROBLE INSERT BLOCK CONDITION IDENTIFICATION	2005	PCF FD/ C91
	B	6709	ATLM-A TROUBLE	ON						
	B	6703	ATLM-A ROD BLOCK SIGNAL TO RAPI-A	ON						
	B	3701	2-CHANNEL DISAGREEMENT	ON						

ROD INSERT PERMISSIVE LOGIC

FIGURE 7.7-3 ROD CONTROL AND INFORMATION SYSTEM IBD (Sheet 20 of 87)

INPUT					LOGIC	OUTPUT			
REF SH	CLASS	SIGNAL ID	DESCRIPTION	COND-ITION		CLASS	DESCRIPTION	SIGNAL ID	REF SH
						B		2113	DOI
DOI	B		RAPI BYPASS SWITCH PLACED IN "NONE"			D		2114	PCF FD/C91
DOI	B		RAPI-A BYPASS SWITCH ACTIVATED	ON		B	SWITCH TO MANUAL	2107	31
		2102	RAPI-B BYPASSED	ON		B	RAPI-A BYPASSED	2101	21,33 37A
	B	3206(B)	RAPI-A AUTO BYPASSED WITH CHANNEL B	ON		B		2115	DOI
		2101	RAPI-A BYPASSED	ON		D		2116	PCF FD/C91
DOI	B		RAPI-B BYPASS SWITCH ACTIVATED	ON		B	SWITCH TO MANUAL *	2108	
						B	RAPI-B BYPASSED	2102	21,33 37A
	B	3206(A)	RAPI-B AUTO BYPASSED WITH CHANNEL A	ON		B		2117	DOI
		2103	ATLM-A BYPASSED	ON		D		2118	PCF FD/C91
						B	SWITCH TO MANUAL	2109	31
DOI	B		ATLM-A BYPASS SWITCH ACTIVATED	ON		B	ATLM-A BYPASSED	2103	18,20 66(B)
		2104	ATLM-B BYPASSED	ON		B		2119	DOI
						D		2120	PCF FD/C91
DOI	B		ATLM BYPASS SWITCH PLACED IN "NONE"	ON		B	SWITCH TO MANUAL *	2110	
						B	ATLM-B BYPASSED	2104	21,66
DOI	B		ATLM-B BYPASS SWITCH ACTIVATED	ON		B		2121	DOI
		2105	RWM-A BYPASSED	ON		D		2122	PCF FD/C91
						B	SWITCH TO MANUAL	2111	31
DOI	B		RWM-A BYPASS SWITCH ACTIVATED	ON		B	RWM-A BYPASSED	2105	18,20
		2106	RWM-B BYPASSED	ON		B		2123	DOI
						D		2124	PCF FD/C91
DOI	B		RWM-B BYPASS SWITCH ACTIVATED	ON		B	SWITCH TO MANUAL *	2112	
DOI	B		RWM BYPASS SWITCH PLACED IN "NONE"	ON		B	RWM-B BYPASSED	2106	21

* THESE SIGNALS GENERATE CHANNEL-B SWITCH TO MANUAL CONDITION IN CHANNEL-B. THE INPUT SIGNALS AND RELATED LOGIC THAT GENERATE THESE SIGNALS ARE PART OF CHANNEL B.

RAPI ATLM & RWM SINGLE CHANNEL BYPASS LOGIC FOR A & B CHANNELS

FIGURE 7.7-3 ROD CONTROL AND INFORMATION SYSTEM IBD (Sheet 21 of 87)

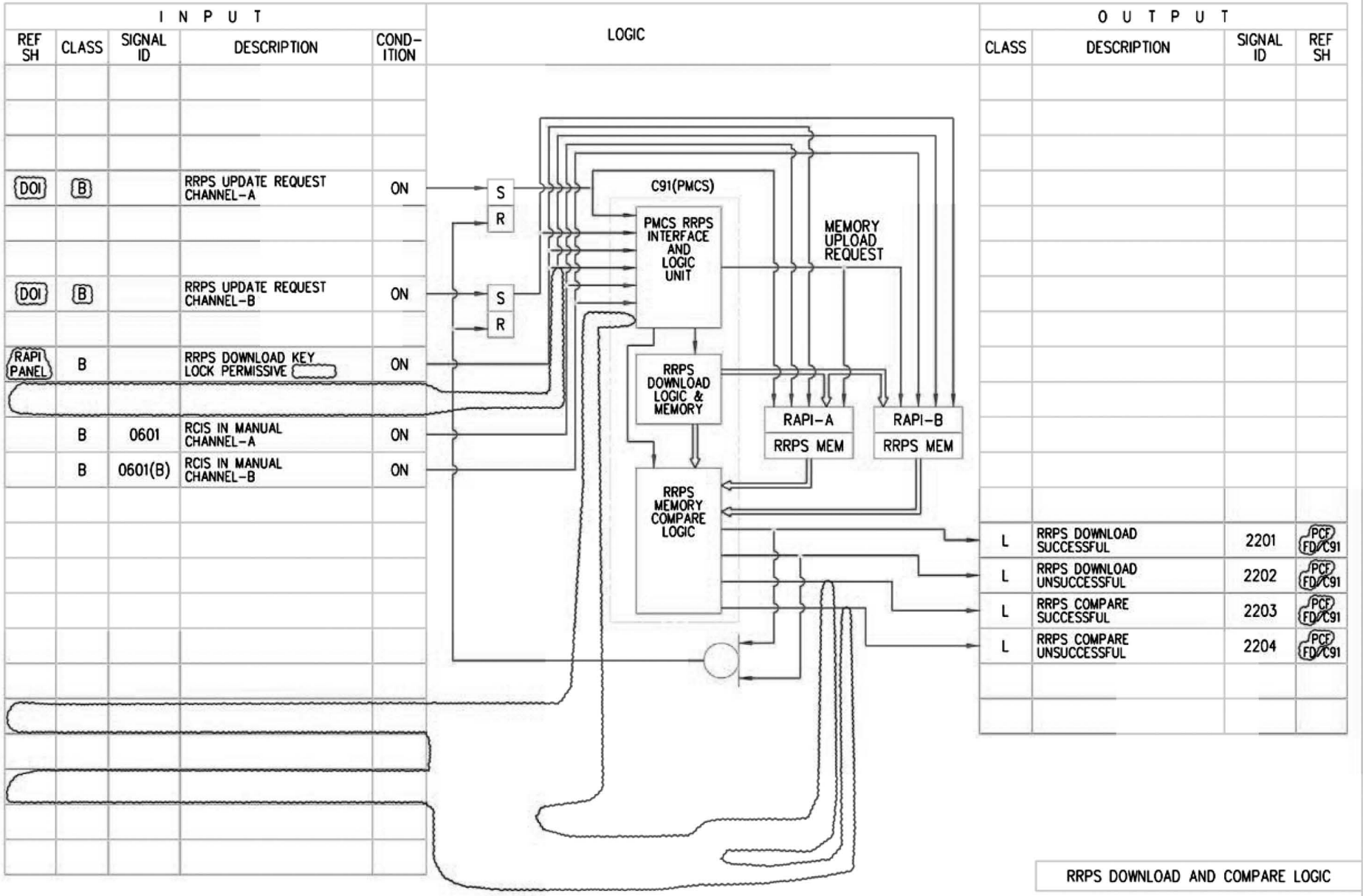

FIGURE 7.7-3 ROD CONTROL AND INFORMATION SYSTEM IBD (Sheet 22 of 87)

INPUT				
REF SH	CLASS	SIGNAL ID	DESCRIPTION	COND-ITION
DOI	B		SCRRI UPDATE REQUEST CHANNEL-A	ON
DOI	B		SCRRI UPDATE REQUEST CHANNEL-B	ON
RAPI PANEL	B		SCRRI DOWNLOAD KEY LOCK PERMISSIVE	ON
	B	0601	RCIS IN MANUAL CHANNEL-A	ON
	B	0601(B)	RCIS IN MANUAL CHANNEL-B	ON
RAPI-A TO PCF	D	2305	CROSS CHANNEL CHECK OK	ON
RAPI-A TO PCF			SCRRI TARGET POSITION DOWNLOAD TO RSPCS-A COMPLETE	ON
RAPI-B TO PCF			CROSS CHANNEL CHECK OK	ON
RAPI-B TO PCF			SCRRI TARGET POSITION DOWNLOAD TO RSPCS-B COMPLETE	ON
	B	2561	SCRRI TARGET POSITION ANSWER BACK	ON
	B	2561(B)	SCRRI TARGET POSITION ANSWER BACK	ON

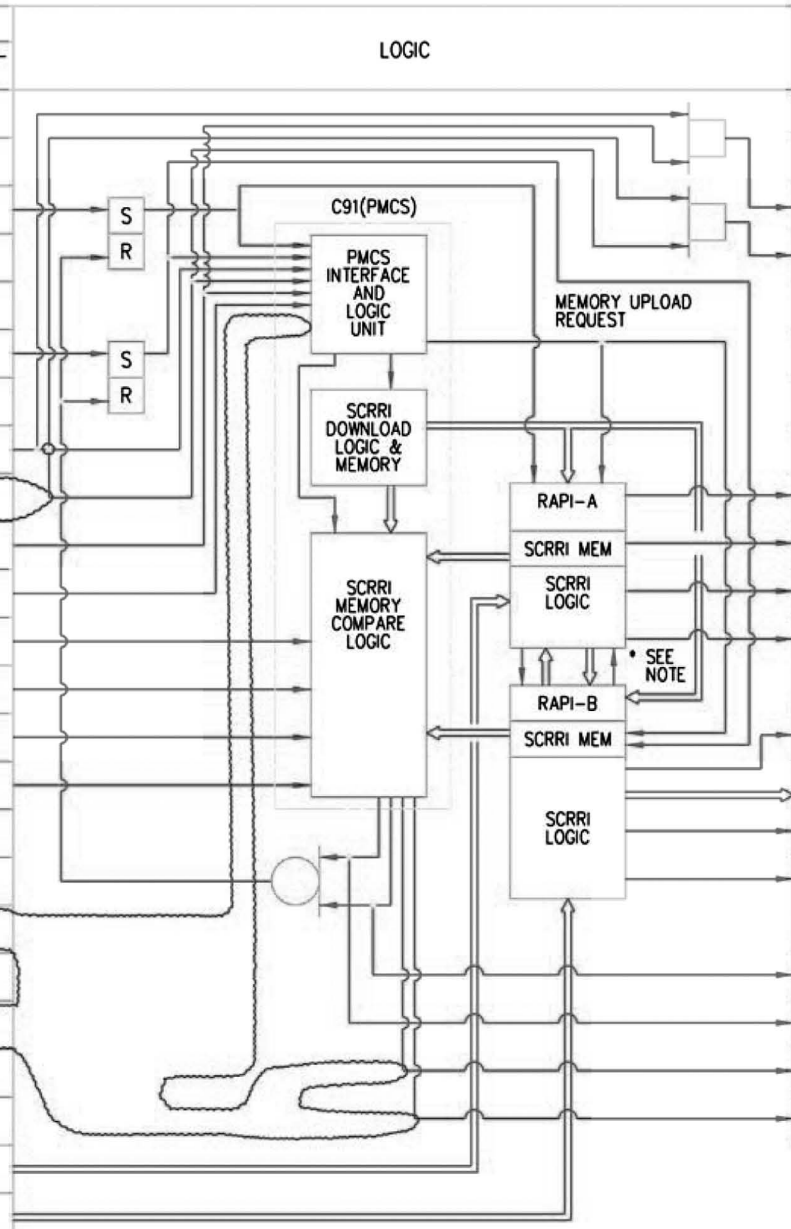

OUTPUT			
CLASS	DESCRIPTION	SIGNAL ID	REF SH
B	SCRRI UPDATE PERMITTED	2301	45
B	SCRRI UPDATE PERMITTED	2302	45
B	SCRRI TARGET POSITION UPDATE REQUEST	2303	45
B	SCRRI TARGET POSITION	2304	45
D	CROSS CHANNEL CHECK OK	2305	PCF
D	SCRRI TARGET POSITION DOWNLOAD TO RSPC-A COMPLETE	2306	PCF
B	SCRRI TARGET POSITION UPDATE REQUEST	2303(B)	45(B)
B	SCRRI TARGET POSITION	2304(B)	45(B)
D	CROSS CHANNEL CHECK OK	2309	PCF
D	SCRRI TARGET POSITION DOWNLOAD TO RSPC-B COMPLETE	2310	PCF
L	SCRRI DOWNLOAD SUCCESSFUL	2311	PCF FD/C91
L	SCRRI DOWNLOAD UNSUCCESSFUL	2312	PCF FD/C91
L	SCRRI COMPARE SUCCESSFUL	2313	PCF FD/C91
L	SCRRI COMPARE UNSUCCESSFUL	2314	PCF FD/C91

THIS LOGIC REPRESENTS THE INTERCONNECTIONS BETWEEN RAPI-A, RAPI-B AND THE PMCS FOR THE ACCOMPLISHMENT OF SCRRI TARGET POSITIONS DOWNLOAD TO PSPCS AND THE RELATED VERIFICATIONS.

* THESE SINGNALS REPRESENT REQUEST FOR MEMORY DOWNLOAD AND ACTUAL MEMORY DOWNLOAD FROM RAPI-A TO RAPI-B AND VISE VERSA.

SCRRI/PMCS DOWNLOAD AND COMPARE LOGIC

FIGURE 7.7-3 ROD CONTROL AND INFORMATION SYSTEM IBD (Sheet 23 of 87)

INPUT					LOGIC	OUTPUT			
REF SH	CLASS	SIGNAL ID	DESCRIPTION	COND-ITION		CLASS	DESCRIPTION	SIGNAL ID	REF SH
						D		2423	PCF FD/C91
	B	3802	SYNCHRO-A FAILURE	ON	TYP OF 205	B	ALL RODS POSITIONS	2401	10,63 64,71
	B	3803	ROD FULL-IN	ON		B	AGGREGATE PERCENT WITHDRAWAL	2402	DOI
	B	3804	ROD POSITION	ON	RAPI-A AND RSPC-A INTERFACE AND LOGIC UNIT	B	SELECTED ROD POSITION	2403	11 DOI
	B	3805	ROD FULL-OUT (SYNCHRO FULL-OUT)	ON		B	SELECTED GANG POSITIONS	2404	11,12,13 DOI
	B	3806	SYNCHRO ERROR	ON		B	SELECTED GANG SETTLING	2409	11
	B	3807	SELECT ACK.	ON		B	ALL RODS FULL-IN	2406	14
	B	3808	ROD SELECTED	ON		B	SELECTED GANG SETTLING	2410	11,12,13
	B	3809	ROD AT 3728mm	ON		B	SELECTED ROD(S) FULL-OUT	2407	14
	B	4804	LATCH FULL-IN	ON					
	B	4805	COUPLING CHECK (OVER-TRAVEL SW ACTIVATED)	ON		D	SYNCHRO FAILURE	2414	PCF FD/C91
	B	4806	BUFFER CONTACT	ON		D	SYNCHRO ERROR	2462	PCF FD/C91
	B	4807	ROD SCRAM TIME DATA	ON		B	SELECT ACK.	2415	9,10
	B	4901	DRIFT DETECTION	ON	TYP OF 205	B		2456	DOI
	B	4903	ROD MOVEMENT FAILURE	ON		B	ROD SELECTED	2416	18,71
						D		2457	PCF FD/C91
						D	ROD LATCHED FULL-IN	2417	PCF FD/C91
	B	5101	RSPC-A SELF TEST FAILURE	ON		B	NUMBER OF RODS LATCHED FULL-IN	2418	DOI
	B	5103	ABNORMAL BRAKE ENERGIZATION	ON	TYP OF 205	D	ROD FULL-IN	2419	PCF FD/C91
	B	5104	BRAKE DISENGAGEMENT FAILURE	ON		B	NUMBER OF RODS FULL-IN	2420	DOI
					TYP OF 205	D	ROD FULL-OUT	2421	PCF FD/C91
						B	NUMBER OF RODS FULL-OUT	2422	DOI
					TYP OF 205	D	SELECTED ROD AT 3728mm	2424	PCF FD/C91
						B		2459	14,15
						D	ROD OVERTRAVEL SWITCH ACTIVATED	2425	PCF FD/C91
						B		2460	15

RAPI-A AND RSPC-A INTERFACE & LOGIC UNIT

FIGURE 7.7-3 ROD CONTROL AND INFORMATION SYSTEM IBD (Sheet 24 of 87)

INPUT					LOGIC	OUTPUT			
REF SH	CLASS	SIGNAL ID	DESCRIPTION	COND-ITION		CLASS	DESCRIPTION	SIGNAL ID	REF SH
	B	4509	SCRRI TARGET POSITION ANSWER BACK	ON	RAPI-A AND RSPC-A INTERFACE & LOGIC UNIT	D	BUFFER CONTACT REED SWITCH ACTIVATED	2526	PCF FD/C91
	B	5201	STEP	ON		D	ROD ACRAM TIME DATA	2527	PCF FD/C91
	B	5202	NOTCH	ON		D	ROD IS DRIFTING	2528	PCF FD/C91
	B	5203	CONTINUOUS	ON		B		2552	32
	B	5204	SETTLE	ON		D	ROD MOVEMENT FAILURE	2529	PCF FD/C91
	B	5205	EMERGENCY INSERT	ON		B		2553	32
	B	5206	INSERT	ON					
	B	5207	WITHDRAW	ON					
	B	5208	STOP	ON		D	PSPC-A SELF TEST FAILURE	2532	PCF FD/C91
	B	5209	INVERTER TROUBLE	ON		B		2533	32
	B	5210	INVERTER CONTROLLER TROUBLE	ON		D	ABNORMAL BRAKE ENERGIZATION	2534	PCF FD/C91
						B		2554	32
						D	BRAKE DISENGAGEMENT FAILURE	2535	PCF FD/C91
						B		2555	32
						B	SCRRI TARGET POSITION ANSWER BACK	2561	23
						D	STEP	2536	PCF FD/C91
						D	NOTCH	2537	PCF FD/C91
						D	CONTINUOUS	2538	PCF FD/C91
						D	SETTLE	2539	PCF FD/C91
						D	EMERGENCY INSERT	2540	PCF FD/C91
						D	INSERT	2541	PCF FD/C91
						D	WITHDRAW	2542	PCF FD/C91
							STOP	2543	PCF FD/C91

ROD POSITION INTERFACE LOGIC

FIGURE 7.7-3 ROD CONTROL AND INFORMATION SYSTEM IBD (Sheet 25 of 87)

INPUT					LOGIC	OUTPUT			
REF SH	CLASS	SIGNAL ID	DESCRIPTION	COND-ITION		CLASS	DESCRIPTION	SIGNAL ID	REF SH
	B	0604	RCIS IN SINGLE ROD DRIVE MODE	ON	RAPI-A AND RSPC-A INTERFACE & LOGIC UNIT	D	INVERTER TROUBLE	2644	PCF FD/C91
	B	0605	RCIS IN GANG ROD DRIVE MODE	ON		B		2645	32
	B	3004	INOP BYPASSED ROD(S) COORDINATES	ON		D	INVERTER CONTROLLER TROUBLE	2646	PCF FD/C91
	B	1003	COORDINATES OF SELECTED GANG	ON		B		2647	32
						D	SELECTED GANG MOVING	2611	PCF FD/C91
	B	0603	RCIS IN AUTOMATIC ROD MOVEMENT MODE	ON		D	NORMAL AUTO ROD MOVEMENT UNDERWAY	2612	APR
	B	1702	INITIATE AUTO GANG SELECTION FOR 2-NOTCH TEST	ON		D	AUTO 2-NOTCH TEST MOVEMENT UNDERWAY	2613	PCF FD/C91

ROD POSITION INTERFACE LOGIC

FIGURE 7.7-3 ROD CONTROL AND INFORMATION SYSTEM IBD (Sheet 26 of 87)

INPUT					LOGIC	OUTPUT			
REF SH	CLASS	SIGNAL ID	DESCRIPTION	COND-ITION		CLASS	DESCRIPTION	SIGNAL ID	REF SH
	B	0603	RCIS IN AUTO MODE	ON	SYNCHRO BYPASS LOGIC				
					D, SP=8	D		2701	PCF FD/C91
					Σ Ai+Bi>D	B	SWITCH TO MANUAL	2702	31
	B	2703	SYNCHRO Bi BYPASSED	ON	TYP OF 205	D		2705	PCF FD/C91
DOI	B		SYNCHRO Ai BYPASS SWITCH ACTIVATED	ON	Ai	B	SYNCHRO Ai BYPASSED	2703	27,38
DOI	B		SYNCHRO Ai BYPASS SWITCH DEACTIVATED	ON	WO S R				
	B	2703	SYNCHRO Ai BYPASSED	ON	TYP OF 205	D		2706	PCF FD/C91
DOI	B		SYNCHRO Bi BYPASS SWITCH ACTIVATED	ON	Bi	B	SYNCHRO Bi BYPASSED	2703(B)	27,38
DOI	B		SYNCHRO Bi BYPASS SWITCH DEACTIVATED	ON	WO S R				
					C, SP=9				
					Σ Ai+Bi>C	ANN	BYPASSED SYNCHROS MORE THAN ALLOWED	2704	

SYNCHRO BYPASS LOGIC

FIGURE 7.7-3 ROD CONTROL AND INFORMATION SYSTEM IBD (Sheet 27 of 87)

INPUT					OUTPUT			
REF SH	CLASS	SIGNAL ID	DESCRIPTION	COND-ITION	CLASS	DESCRIPTION	SIGNAL ID	REF SH
	B	0603	RCIS IN AUTO MODE	ON				
					D		2801	PCF FD/C91
					B	SWITCH TO MANUAL	2802	31
	B	2813	RSPC Bi BYPASSED	ON	D			PCF FD/C91
DOI	D		RSPC Ai BYPASS SWITCH DEACTIVATED	ON	B	RSPC Ai BYPASSED	2803	28,53 54,55
DOI	D		RSPC Ai BYPASS SWITCH ACTIVATED	ON				
	B	2803	RSPC Ai BYPASSED	ON	D			PCF FD/C91
DOI	D		RSPC Bi BYPASS SWITCH DEACTIVATED	ON	B	RSPC Bi BYPASSED	2813	28,53 54,55
DOI	D		RSPC Bi BYPASS SWITCH ACTIVATED	ON				
					ANN	BYPASSED RSPCs MORE THAN ALLOWED	2805	
	B	3204	RSPC-Ai AUTO BYPASSED	ON				
	B	(3204)	RSPC-Bi AUTO BYPASSED	ON				

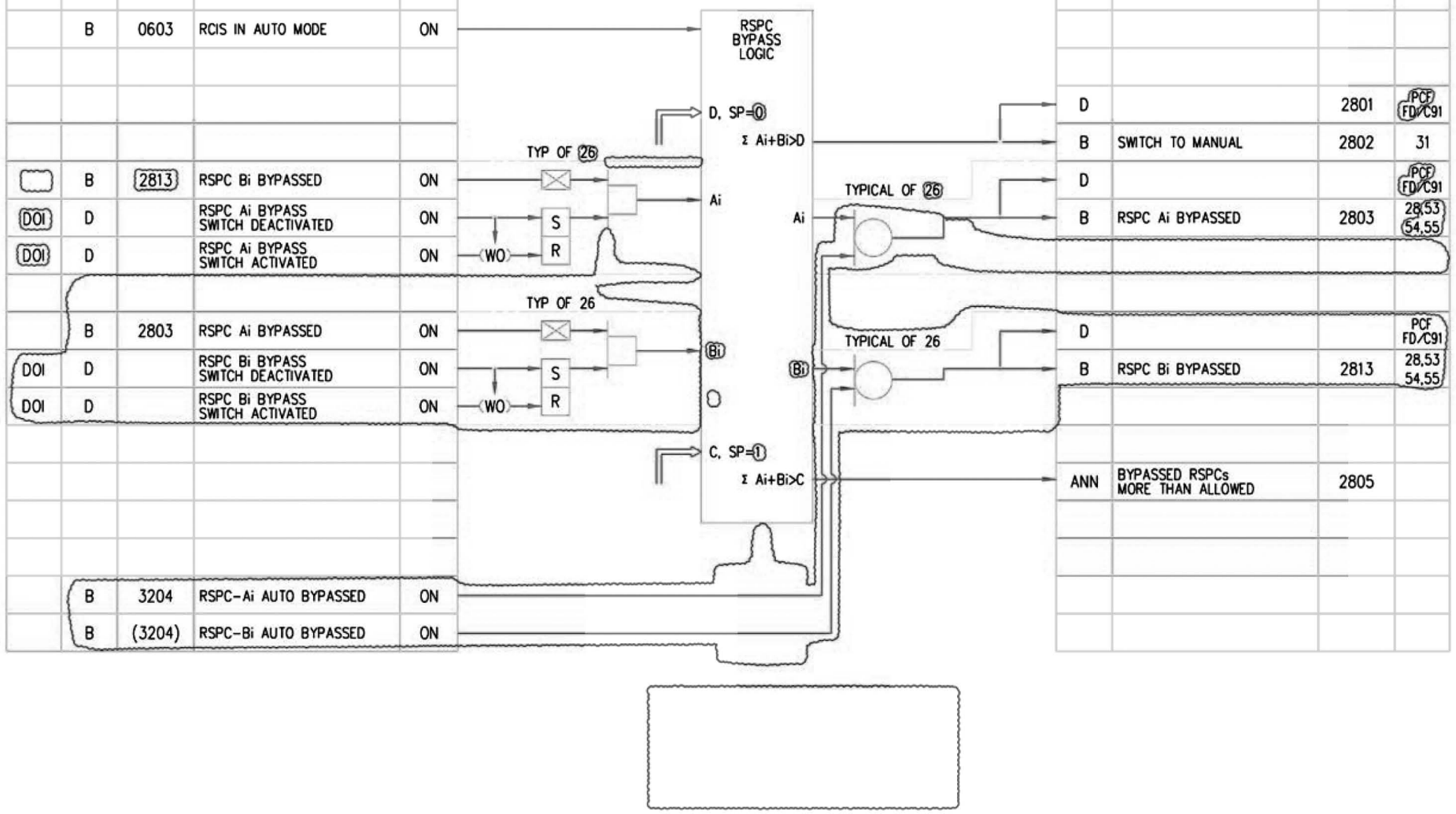

RSPC BYPASS LOGIC

FIGURE 7.7-3 ROD CONTROL AND INFORMATION SYSTEM IBD (Sheet 28 of 87)

THIS PAGE IS INTENTIONALY
LEFT BLANK

FIGURE 7.7-3 ROD CONTROL AND INFORMATION SYSTEM IBD (Sheet 29 of 87)

INPUT					LOGIC	OUTPUT			
REF SH	CLASS	SIGNAL ID	DESCRIPTION	COND-ITION		CLASS	DESCRIPTION	SIGNAL ID	REF SH
	B	0603	RCIS IN AUTO MODE	ON	CONTROL ROD INOP BYPASS LOGIC				
					D, SP=8	D		3001	PCF FD/C91
					Σ Ai>D	B	SWITCH TO MANUAL	3002	31
	B	0403	REACTOR MODE SWITCH IN REFUEL	ON		B	INOP BYPASS RODS	3007	DOI
					TYPICAL OF 205	D		3006	PCF FD/C91
DOI	B		INOP BYPASS SWITCH OF ROD Ai ACTIVATED	ON	S	B	ROD Ai INOP BYPASSED	3003	50
DOI	B		INOP BYPASS SWITCH OF ROD Ai DEACTIVATED	ON	WO R				
						B	INOP BYPASSED ROD(S) COORDINATES	3004	9,10 26,71
					E, SP=35				
					Σ Ai>E				
					C, SP=8				
					Σ Ai>C	ANN	INOP BYPASSED RODS MORE THAN ALLOWED	3005	

INOP BYPASS LOGIC

FIGURE 7.7-3 ROD CONTROL AND INFORMATION SYSTEM IBD (Sheet 30 of 87)

INPUT					LOGIC	OUTPUT			
REF SH	CLASS	SIGNAL ID	DESCRIPTION	COND-ITION		CLASS	DESCRIPTION	SIGNAL ID	REF SH
	B	2702	SWITCH TO MANUAL	ON					
	B	2802	SWITCH TO MANUAL	ON					
						D			PCF FD/C91
	B	3002	SWITCH TO MANUAL	ON					
	B	2107	SWITCH TO MANUAL	ON		B	SWITCH TO MANUAL	3102	6
	B	2109	SWITCH TO MANUAL	ON					
	B	2111	SWITCH TO MANUAL	ON					
	B	1310	SWITCH TO MANUAL	ON					
	B	2103	ATLM-A BYPASSED	ON					
	B	6703	ATLM-A ROD WITHDRAWAL BLOCK SIGNAL TO RAPI-A	ON		ANN		3103	
	B	0305	REACTOR POWER BELOW LPSP	ON		B	ATLM-A ROD WITHDRAWAL BLOCK	3105	18
	B	2105	RWM-A BYPASSED	ON		ANN	RWM-A WD/INS BLOCK	3104	
	B	8401	RWM-A ROD INSERT PERMISSIVE	ON					
			RWM-A SINGLE ROD WD PERMISSIVE	ON					
			RWM-A DUAL ROD WD PERMISSIVE	ON					
			RWM-A ROD WD PERMISSIVE	ON					

RWM (AND) ATLM
BYPASS LOGIC

FIGURE 7.7-3 ROD CONTROL AND INFORMATION SYSTEM IBD (Sheet 31 of 87)

INPUT					LOGIC	OUTPUT			
REF SH	CLASS	SIGNAL ID	DESCRIPTION	COND-ITION		CLASS	DESCRIPTION	SIGNAL ID	REF SH
					RAPI-A SELF TEST LOGIC	B	RAPI-A TROUBLE	3201	18,20
	B	2552	ROD IS DRIFTING	ON	TYPICAL OF 205				
	B	2553	ROD MOVEMENT FAILURE	ON	TYPICAL OF 26				
	B	2533	RSPC-A SELF TEST FAILURE	ON	TYPICAL OF 26				
	B	2554	ABNORMAL BRAKE ENERGIZATION	ON		B		3202	DOI
	B	2555	BRAKE DISENGAGEMENT FAILURE	ON					
	B	2645	INVERTER TROUBLE	ON	S	ANN	RCIS TROUBLE	3203	
	B	2647	INVERTER CONTROLLER TROUBLE	ON	WO R				
DOI	B		RCIS RESET	ON					
					CHANNEL B				
RAPI-B	B	0501(B)	SCRRI RODS GO IN EMERGENCY	ON		B	RAPI-A AUTO BYPASSED WITHIN CHANNEL. B	3206(B)	21
RAPI-B	B	0503(B)	ARI CONDITION EXIST	ON		D		3205	PCF FD/C91
RAPI-B	B	0401(B)	SCRAM FOLLOW CONDITION EXISTS	ON		B	RSPC-Ai AUTO BYPASSED	3204	28

RCIS AND RAPI TROUBLE LOGIC

FIGURE 7.7-3 ROD CONTROL AND INFORMATION SYSTEM IBD (Sheet 32 of 87)

INPUT					LOGIC	OUTPUT			
REF SH	CLASS	SIGNAL ID	DESCRIPTION	COND-ITION		CLASS	DESCRIPTION	SIGNAL ID	REF SH
	B	0308(A)	REACTOR POWER IS BELOW LPSP	ON	SELECTION LOGIC DETAIL A *	L	REACTOR POWER IS ABOVE LPSP	3301	
	B	0308(B)		ON		B	VALIDATION ERROR	3302	37
	B	0621(A)	RCIS IN SINGLE ROD DRIVE MODE	ON	SELECTION LOGIC DETAIL A *	L	RCIS IN SINGLE ROD DRIVE MODE	3303	
	B	0621(B)		ON		B	VALIDATION ERROR	3304	37
	B	0622(A)	RCIS IN GANG ROD DRIVE MODE	ON	SELECTION LOGIC DETAIL A *	L	RCIS IN GANG ROD DRIVE MODE	3305	
	B	0622(B)		ON		B	VALIDATION ERROR	3306	37
	B	0615(A)	RCIS IN MANUAL	ON	SELECTION LOGIC DETAIL A *	L	RCIS IN MANUAL	3309	
	B	0615(B)		ON		B	VALIDATION ERROR	3310	37
	B	0616(A)	RCIS IN SEMI-AUTO	ON	SELECTION LOGIC DETAIL A *	L	RCIS IN SEMI AUTO	3311	
	B	0616(B)		ON		B	VALIDATION ERROR	3312	37
	B	0617(A)	RCIS IN AUTO	ON	SELECTION LOGIC DETAIL A *	L	RCIS IN AUTO	3313	
	B	0617(B)		ON		B	VALIDATION ERROR	3314	37
						B	RAPI-A BYPASS IN EFFECT	3315	33A
	B	2101	RAPI-A BYPASSED	ON		B	RAPI-B BYPASS IN EFFECT	3316	33A
	B	2102	RAPI-B BYPASSED	ON					

* SEE DETAIL A ON SHEET 59

DOI LOGIC

FIGURE 7.7-3 ROD CONTROL AND INFORMATION SYSTEM IBD (Sheet 33 of 87)

INPUT					LOGIC	OUTPUT			
REF SH	CLASS	SIGNAL ID	DESCRIPTION	COND-ITION		CLASS	DESCRIPTION	SIGNAL ID	REF SH
	B	0720(A)	RCIS IN STEP DRIVE MODE	ON	SELECTION LOGIC DETAIL A *	L	RCIS IN STEP DRIVE MODE	33A01	
	B	0720(B)		ON		B	VALIDATION ERROR	33A02	37
	B	0721(A)	RCIS IN NOTCH DRIVE MODE	ON	SELECTION LOGIC DETAIL A *	L	RCIS IN NOTCH DRIVE MODE	33A03	
	B	0721(B)		ON		B	VALIDATION ERROR	33A04	37
	B	0722(A)	RCIS IN CONTINUOUS DRIVE MODE	ON	SELECTION LOGIC DETAIL A *	L	RCIS IN CONTINUOUS DRIVE MODE	33A05	
	B	0722(B)		ON		B	VALIDATION ERROR	33A06	37
	B	1501(A)	SELECTED SINGLE ROD COUPLING IS OK	ON	SELECTION LOGIC DETAIL A *	L	SELECTED SINGLE ROD COUPLING IS OK	33A07	
	B	1501(B)		ON		B	VALIDATION ERROR	33A08	37
	B	1502(A)	SELECTED SINGLE ROD IS UNCOUPLED	ON	SELECTION LOGIC DETAIL A *	L	SELECTED SINGLE ROD IS UNCOUPLED	33A09	
	B	1502(B)		ON		B	VALIDATION ERROR	33A10	37
	B	1503(A)	SELECTED DUAL RODS COUPLING IS OK	ON	SELECTION LOGIC DETAIL A *	L	SELECTED DUAL RODS COUPLING IS OK	33A11	
	B	1503(B)		ON		B	VALIDATION ERROR	33A12	37
	B	1504(A)	ONE OF THE SELECTED DUAL RODS IS UNCOUPLED	ON	SELECTION LOGIC DETAIL A *	L	ONE OF THE SELECTED DUAL RODS IS UNCOUPLED	33A13	
	B	1504(B)		ON		B	VALIDATION ERROR	33A14	37
						B	RAPI-A BYPASS IN EFFECT	33A15	34,35,36
	B	3315	RAPI-A BYPASS IN EFFECT	ON		B	RAPI-B BYPASS IN EFFECT	33A16	34,35,36
	B	3316	RAPI-B BYPASS IN EFFECT	ON					

* SEE DETAIL A ON SHEET 59

DOI LOGIC

FIGURE 7.7-3 ROD CONTROL AND INFORMATION SYSTEM IBD (Sheet 33A of 87)

STP 3 & 4 Rev.2

INPUT					LOGIC	OUTPUT			
REF SH	CLASS	SIGNAL ID	DESCRIPTION	COND-ITION		CLASS	DESCRIPTION	SIGNAL ID	REF SH
	B	0812(A)	CRDSTSS IN 1CRD/2CRD	ON	SELECTION LOGIC DETAIL A *	L	CRDSTSS IN 1CRD/2CRD	3401	
	B	0812(B)		ON		B	VALIDATION ERROR	3402	37
	B	0814(A)	CRDSTSS IN COUPLING TEST	ON	SELECTION LOGIC DETAIL A *	L	CRDSTSS IN COUPLING CHECK	3403	
	B	0814(B)		ON		B	VALIDATION ERROR	3404	37
	B	0818(A)	CRDSTSS IN 2-NOTCH TEST	ON	SELECTION LOGIC DETAIL A *	L	CRDSTSS IN STEP TEST	3407	
	B	0818(B)		ON		B	VALIDATION ERROR	3408	37
	B	0820(A)	CRDSTSS IN IDLE	ON	SELECTION LOGIC DETAIL A *	L	CRDSTSS IN IDLE	3409	
	B	0820(B)		ON		B	VALIDATION ERROR	3410	37
	B	0824(A)	CRDSTMS IN AUTO	ON	SELECTION LOGIC DETAIL A *	L	CRDSTMS IN AUTO	3411	
	B	0824(B)		ON		B	VALIDATION ERROR	3412	37
	B	0826(A)	CRDSTMS IN IDLE	ON	SELECTION LOGIC DETAIL A *	L	CRDSTMS IN IDLE	3413	
	B	0826(B)		ON		B	VALIDATION ERROR	3414	37
	B	33A15	RAPI-A BYPASS IN EFFECT	ON					
	B	33A16	RAPI-B BYPASS IN EFFECT	ON					

* SEE DETAIL A ON SHEET 59

DOI LOGIC

FIGURE 7.7-3 ROD CONTROL AND INFORMATION SYSTEM IBD (Sheet 34 of 87)

INPUT					LOGIC	OUTPUT			
REF SH	CLASS	SIGNAL ID	DESCRIPTION	COND-ITION		CLASS	DESCRIPTION	SIGNAL ID	REF SH
	B	0827(A)	CRDSTMS IN MANUAL	ON	SELECTION LOGIC DETAIL A *	L	CRDSTMS IN MANUAL	3501	
	B	0827(B)		ON		B	VALIDATION ERROR	3502	37
	B	0829(A)	CRD SURVEILLANCE TEST STARTED	ON	SELECTION LOGIC DETAIL A *	L	CRD SURVEILLANCE TEST STARTED	3503	
	B	0829(B)		ON		B	VALIDATION ERROR	3504	37
	B	0831(A)	CRD SURVEILLANCE TEST STOPPED	ON	SELECTION LOGIC DETAIL A *	L	CRD SURVEILLANCE TEST STOPPED	3505	
	B	0831(B)		ON		B	VALIDATION ERROR	3506	37
	B	1906(A)	ROD WITHDRAWAL BLOCK	ON	SELECTION LOGIC DETAIL A *	L	ROD WITHDRAWAL BLOCK	3507	
	B	1906(B)		ON		B	VALIDATION ERROR	3508	37
	B	2007(A)	ROD INSERT BLOCK	ON	SELECTION LOGIC DETAIL A *	L	ROD INSERT BLOCK	3509	
	B	2007(B)		ON		B	VALIDATION ERROR	3510	37
	B	2402(A)	AGGREGATE PERCENT WITHDRAWAL		SP → A; C → COMPARATOR LOGIC | A-B |>C	L	AGGREGATE PERCENT WITHDRAWAL	3511	
	B	2402(B)			B → COMPARATOR LOGIC | A-B |>C	B	VALIDATION ERROR	3512	37
	B	2403(A)	SELECTED ROD POSITION		SP → A; C → COMPARATOR LOGIC | A-B |>C	L	SELECTED ROD POSITION	3513	
	B	2403(B)			B → COMPARATOR LOGIC | A-B |>C	B	VALIDATION ERROR	3514	37
	B	33A15	RAPI-A BYPASS IN EFFECT	ON					
	B	33A16	RAPI-B BYPASS IN EFFECT	ON					

* SEE DETAIL A ON SHEET 59

DOI LOGIC

FIGURE 7.7-3 ROD CONTROL AND INFORMATION SYSTEM IBD (Sheet 35 of 87)

INPUT					LOGIC	OUTPUT			
REF SH	CLASS	SIGNAL ID	DESCRIPTION	COND-ITION		CLASS	DESCRIPTION	SIGNAL ID	REF SH
	B	2404(A)	SELECTED GANG POSITION		SP; A; C; B; COMPARATOR LOGIC | A-B |>C	L	SELECTED GANG POSITION	3601	
	B	2404(B)				B	VALIDATION ERROR	3602	37
	B	2456(A)	ROD SELECTED	ON	A; B; COMPARATOR LOGIC | A-B |>Ø	L	SELECTED ROD	3603	
	B	2456(B)		ON		B	VALIDATION ERROR	3604	37
	B	2418(A)	NUMBER OF RODS LATCHED FULL-IN	ON	A; B; COMPARATOR LOGIC | A-B |>Ø	L	NUMBER OF RODS LATCHED FULL-IN	3605	
	B	2418(B)		ON		B	VALIDATION ERROR	3606	37
	B	2420(A)	NUMBER OF RODS FULL-IN	ON	A; B; COMPARATOR LOGIC | A-B |>Ø	L	NUMBER OF RODS FULL-IN	3607	
	B	2420(B)		ON		B	VALIDATION ERROR	3608	37
	B	2422(A)	NUMBER OF RODS FULL-OUT	ON	A; B; COMPARATOR LOGIC | A-B |>Ø	L	NUMBER OF RODS FULL-OUT	3609	
	B	2422(B)		ON		B	VALIDATION ERROR	3610	37
	B	3007(A)	NUMBER OF INOP BYPASSED RODS	ON	A; B; COMPARATOR LOGIC | A-B |>Ø	L	NUMBER OF INOP BYPASSED RODS	3611	
	B	3007(B)		ON		B	VALIDATION ERROR	3612	37
	B	3202(A)	RCIS TROUBLE	ON	SELECITION LOGIC DETAIL A *	L	RCIS TROUBLE	3613	
	B	3202(B)		ON		B	VALIDATION ERROR	3614	37
	B	33A15	RAPI-A BYPASS IN EFFECT	ON					
	B	33A16	RAPI-B BYPASS IN EFFECT	ON					

* SEE DETAIL A ON SHEET 59

DOI LOGIC

FIGURE 7.7-3 ROD CONTROL AND INFORMATION SYSTEM IBD (Sheet 36 of 87)

INPUT					LOGIC	OUTPUT			
REF SH	CLASS	SIGNAL ID	DESCRIPTION	COND-ITION		CLASS	DESCRIPTION	SIGNAL ID	REF SH
	B	3302	VALIDATION ERROR	ON					
	B	3304	VALIDATION ERROR	ON					
	B	3306	VALIDATION ERROR	ON					
	B	3310	VALIDATION ERROR	ON					
	B	3312	VALIDATION ERROR	ON					
	B	3314	VALIDATION ERROR	ON					
	B	33A02	VALIDATION ERROR	ON					
	B	33A04	VALIDATION ERROR	ON					
	B	33A06	VALIDATION ERROR	ON					
	B	33A08	VALIDATION ERROR	ON					
	B	33A10	VALIDATION ERROR	ON					
	B	33A12	VALIDATION ERROR	ON					
	B	33A14	VALIDATION ERROR	ON					
	B	3402	VALIDATION ERROR	ON					
	B	3404	VALIDATION ERROR	ON					
	B	3408	VALIDATION ERROR	ON					
	B	3410	VALIDATION ERROR	ON	DOI SELF TEST NOT FAILED	ANN	DOI SELF TEST FAILURE	3702	
	B	3412	VALIDATION ERROR	ON					
	B	3414	VALIDATION ERROR	ON	TPU t	B	2-CHANNEL DISAGREEMENT	3701	19,20
	B	3502	VALIDATION ERROR	ON		B		3703	PCF FD/C91
	B	3504	VALIDATION ERROR	ON		ANN		3704	
	B	3506	VALIDATION ERROR	ON					
	B	3508	VALIDATION ERROR	ON					
	B	3510	VALIDATION ERROR	ON					
	B	3512	VALIDATION ERROR	ON					
	B	3514	VALIDATION ERROR	ON					
	B	3602	VALIDATION ERROR	ON					
	B	3604	VALIDATION ERROR	ON					
	B	3606	VALIDATION ERROR	ON					
	B	3608	VALIDATION ERROR	ON					
	B	3610	VALIDATION ERROR	ON					
	B	3612	VALIDATION ERROR	ON					
	B	3614	VALIDATION ERROR	ON					

2-CHANNEL DISAGREEMENT LOGIC
(PART OF DOI)

FIGURE 7.7-3 ROD CONTROL AND INFORMATION SYSTEM IBD (Sheet 37 of 87)

INPUT					LOGIC	OUTPUT			
REF SH	CLASS	SIGNAL ID	DESCRIPTION	COND-ITION		CLASS	DESCRIPTION	SIGNAL ID	REF SH
			INPUT SIGNAL FROM RAPI-A	ON	TYPICAL OF 26				
			INPUT SIGNAL FROM RAPI-B	ON		B	VALIDATED SIGNAL *		
	B	2101	RAPI-A BYPASSED	ON					
	B	2102	RAPI-B BYPASSED	ON					

* EACH INPUT SIGNALS ARE VALIDATED BY THIS LOGIC.

VALIDATION SELECTION LOGIC (RSPC)

FIGURE 7.7-3 ROD CONTROL AND INFORMATION SYSTEM IBD (Sheet 37A of 87)

STP 3 & 4 Rev.2

INPUT					OUTPUT			
REF SH	CLASS	SIGNAL ID	DESCRIPTION	COND-ITION	CLASS	DESCRIPTION	SIGNAL ID	REF SH
					B	SYNCHRO A ROD POSITION	3801	38
C12	A		SYNCHRO A ROD POSITION		B	SYNCHRO A FAILURE	3802	24
					B	FULL IN SETPOINT	3814	46
					B	ROD FULL IN	3803	24
	B	3801	SYNCHRO A ROD POSITION		B	SETTLE	3810	47
	B	3801(B)	SYNCHRO B ROD POSITION		B	ROD POSITION	3804	24 39 THRU 46,49
	B	2703	SYNCHRO Ai BYPASSED	ON	B	ROD AT 3728mm	3809	24
					B	SETTLE	3811	47
					B	ROD FULL OUT	3805	39
					B	SYNCHRO ERROR	3806	24
	B	2703(B)	SYNCHRO Bi BYPASSED	ON				
	B	0901 1002	SELECT REQUEST	ON	B	SELECT ACK.	3807	24
	B	0902 1003	ROD SELECTED	ON	B	ROD SELECTED	3808	24,39 46

LOGIC

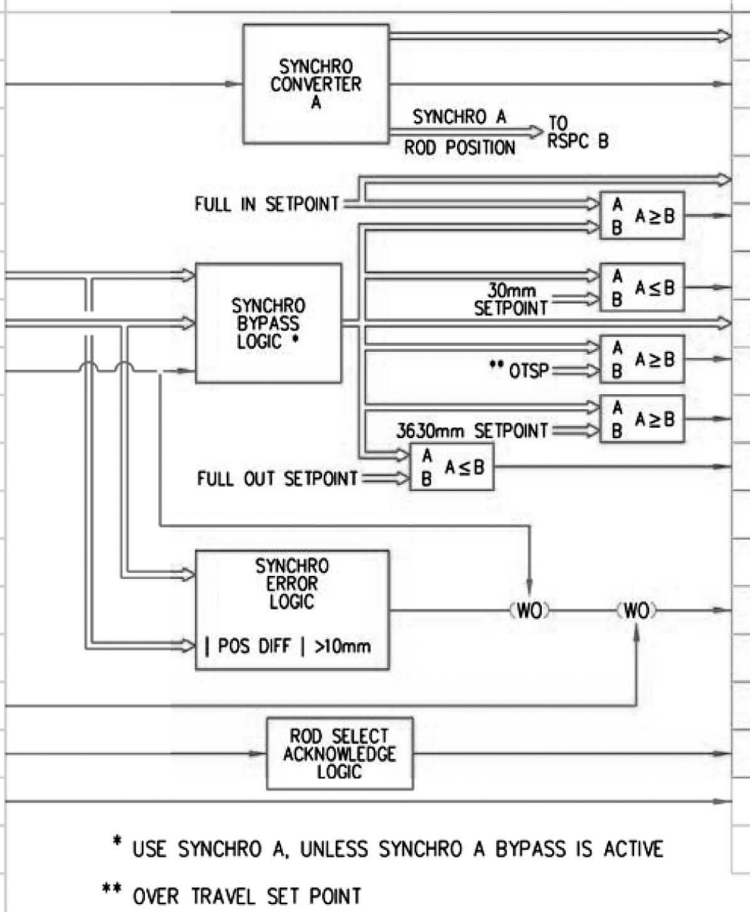

* USE SYNCHRO A, UNLESS SYNCHRO A BYPASS IS ACTIVE

** OVER TRAVEL SET POINT

CHANNEL A
TYPICAL OF CHANNEL B

SYNCHRO SELECTION, ECHO, AND ROD POSITION LOGIC

FIGURE 7.7-3 ROD CONTROL AND INFORMATION SYSTEM IBD (Sheet 38 of 87)

INPUT					LOGIC	OUTPUT			
REF SH	CLASS	SIGNAL ID	DESCRIPTION	COND-ITION		CLASS	DESCRIPTION	SIGNAL ID	REF SH
	B	1901	ROD WITHDRAWAL PERMISSIVE						
	B	1009	EMERGENCY INSERT	ON					
	B	1305	WITHDRAW	ON					
	B	3805	ROD FULL OUT	ON		B	WITHDRAW	3901	48
	B	0806	OVERTRAVEL PERMIT	ON					
	B	3808	ROD SELECTED	ON					
	B	0709	RCIS IN STEP/NOTCH WITHDRAWAL MODE	ON		B	ROD SELECTED STEP WITHDRAW	3902	39
	B	3904	STEP WITHDRAW NOT COMPLETED	ON					
	B	0701	RCIS IN STEP DRIVE MODE	ON					
	B	1307	STEP	ON		B	STEP	3903	47
	B	3902	ROD SELECTED STEP WITHDRAW	ON					
	B	1101,1102 1204,1303	REFERENCE ROD POSITION			B	STEP WITHDRAW NOT COMPLETED	3904	39
	B	3804	ROD POSITION						

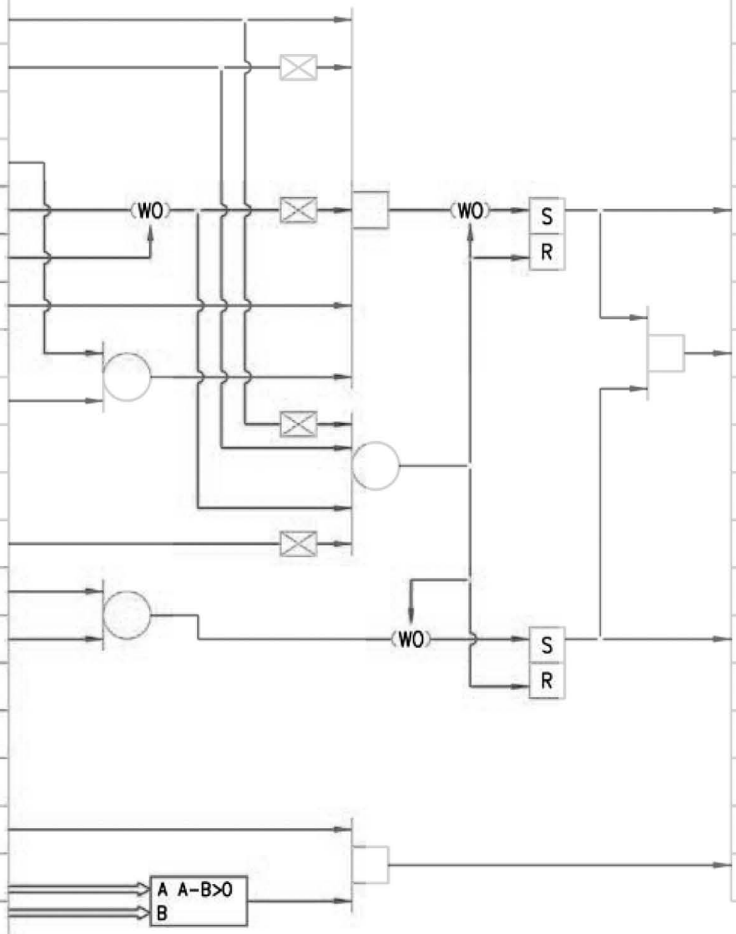

CHANNEL A
TYPICAL OF CHANNEL B

STEP WITHDRAWAL LOGIC

FIGURE 7.7-3 ROD CONTROL AND INFORMATION SYSTEM IBD (Sheet 39 of 87)

INPUT					OUTPUT			
REF SH	CLASS	SIGNAL ID	DESCRIPTION	COND-ITION	CLASS	DESCRIPTION	SIGNAL ID	REF SH
	B	2001	ROD INSERT PERMISSIVE	ON				
	B	1009	EMERGENCY INSERT	ON				
	B	3803	ROD FULL IN	ON	B	INSERT	4001	48,50
	B	3808	ROD SELECTED	ON				
	B	0706	RCIS IN STEP/NOTCH INSERT MODE	ON				
	B	1304	INSERT	ON				
					B	ROD SELECTED STEP INSERT	4002	40
	B	4004	STEP INSERT NOT COMPLETED	ON				
	B	0701	RCIS IN STEP DRIVE MODE	ON	B	STEP	4003	47
	B	1307	STEP	ON				
	B	4002	ROD SELECTED STEP INSERT	ON				
	B	1101,1102 1204,1303	REFERENCE ROD POSITION		B	STEP INSERT NOT COMPLETED	4004	40
	B	3804	ROD POSITION					

LOGIC

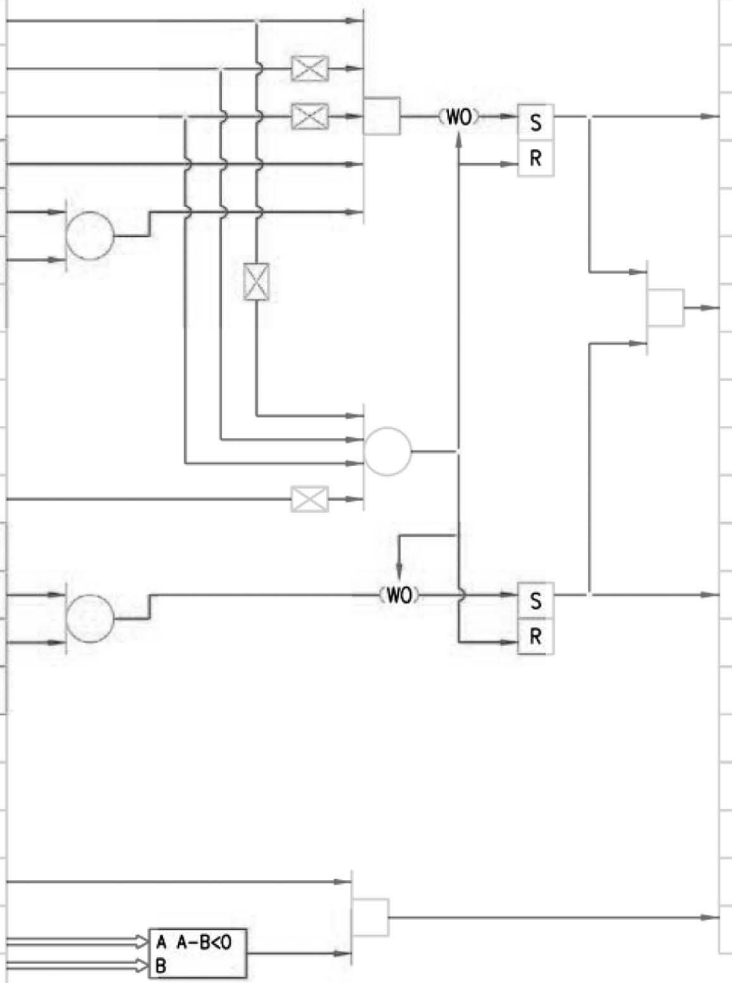

CHANNEL A
TYPICAL OF CHANNEL B

STEP INSERT LOGIC

FIGURE 7.7-3 ROD CONTROL AND INFORMATION SYSTEM IBD (Sheet 40 of 87)

INPUT					OUTPUT			
REF SH	CLASS	SIGNAL ID	DESCRIPTION	COND-ITION	CLASS	DESCRIPTION	SIGNAL ID	REF SH
	B	1901	ROD WITHDRAWAL PERMISSIVE	ON				
	B	1009	EMERGENCY INSERT	ON				
	B	3805	ROD FULL OUT	ON	B	WITHDRAW	4101	48
	B	0806	OVERTRAVEL PERMIT	ON				
	B	3808	ROD SELECTED	ON				
	B	0709	RCIS IN STEP/NOTCH WITHDRAWAL MODE	ON	B	ROD SELECTED NOTCH WITHDRAW	4102	41
	B	4106	NOTCH WITHDRAWAL NOT COMPLETED	ON				
	B	0702	RCIS IN NOTCH DRIVE MODE	ON	B	NOTCH	4103	47
	B	1101,1102 1204,1303	REFERENCE ROD POSITION					
	B	3804	ROD POSITION		B	NOTCH WITHDRAWAL NOT COMPLETED	4106	41
	B	4102	ROD SELECTED NOTCH WITHDRAW	ON	B	SETTLE	4107	47

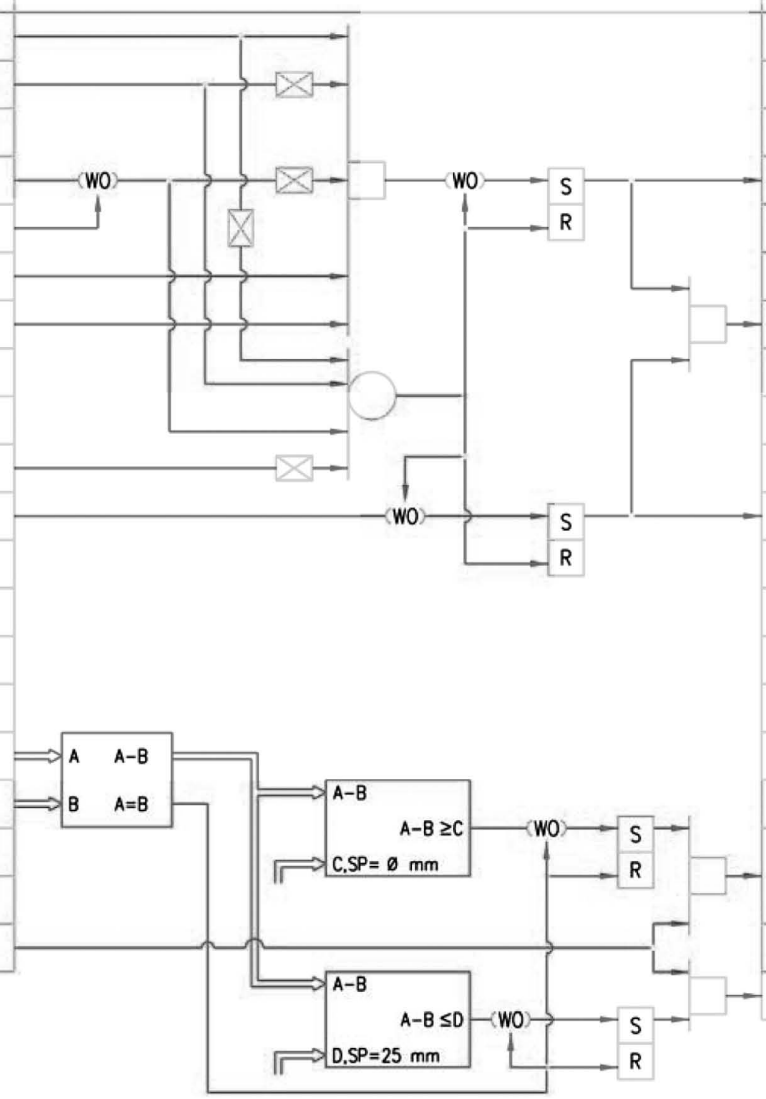

CHANNEL A
TYPICAL OF CHANNEL B

NOTCH WITHDRAWAL LOGIC

FIGURE 7.7-3 ROD CONTROL AND INFORMATION SYSTEM IBD (Sheet 41 of 87)

INPUT					OUTPUT			
REF SH	CLASS	SIGNAL ID	DESCRIPTION	COND-ITION	CLASS	DESCRIPTION	SIGNAL ID	REF SH
	B	2001	ROD INSERT PERMISSIVE	ON				
	B	1009	EMERGENCY INSERT	ON				
	B	3803	ROD FULL IN	ON	B	INSERT	4201	48
	B	3808	ROD SELECTED	ON				
	B	0706	RCIS IN STEP/NOTCH INSERT MODE	ON	B	ROD SELECTED NOTCH INSERT	4202	42
	B	4206	NOTCH INSERT NOT COMPLETED	ON				
	B	0702	RCIS IN NOTCH DRIVE MODE	ON	B	NOTCH	4203	47
	B	1101,1102 1204,1303	REFERENCE ROD POSITION					
	B	3804	ROD POSITION		B	NOTCH INSERT NOT COMPLETED	4206	42
	B	4202	ROD SELECTED NOTCH NISERT	ON	B	SETTLE	4207	47

LOGIC

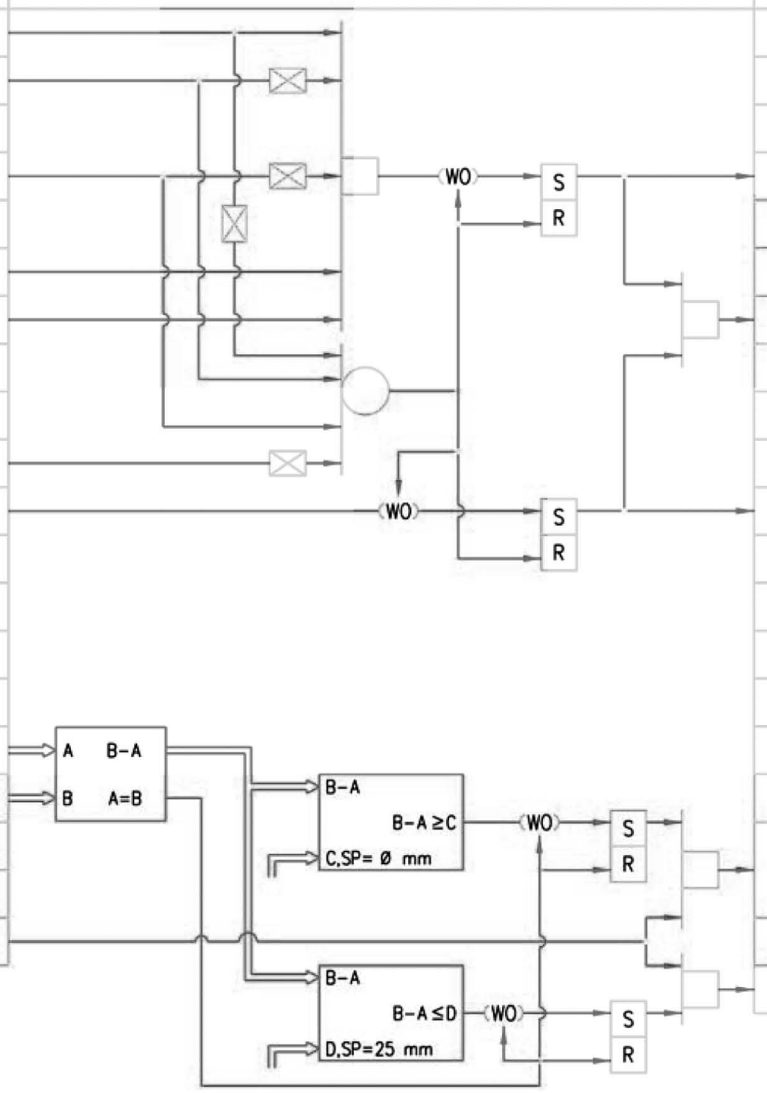

CHANNEL A
TYPICAL OF CHANNEL B

NOTCH INSERT LOGIC

FIGURE 7.7-3 ROD CONTROL AND INFORMATION SYSTEM IBD (Sheet 42 of 87)

INPUT					OUTPUT			
REF SH	CLASS	SIGNAL ID	DESCRIPTION	COND-ITION	CLASS	DESCRIPTION	SIGNAL ID	REF SH
	B	1901	ROD WITHDRAWAL PERMISSIVE	ON				
	B	1009	EMERGENCY INSERT	ON				
	B	0806	OVERTRAVEL PERMIT	ON				
	B	3805	ROD FULL OUT	ON	B	WITHDRAW	4301	48
	B	3808	ROD SELECTED	ON				
	B	0704	RCIS IN CONTINUOUS WITHDRAWAL DRIVE MODE	ON				
					B	ROD SELECTED CONTINUOUS WITHDRAW	4302	43
	B	1305	WITHDRAWAL	ON				
	B	1306	CONTINUOUS	ON				
	B	4306	CONTINUOUS WITHDRAW NOT COMPLETED	ON				
					B	CONTINUOUS	4303	47
	B	1101,1102 1204,1303	REFERENCE ROD POSITION					
	B	3804	ROD POSITION					
					B	CONTINUOUS WITHDRAW NOT COMPLETED	4306	43
	B	4302	ROD SELECTED CONTINUOUS WITHDRAW	ON				
					B	SETTLE	4307	47

LOGIC

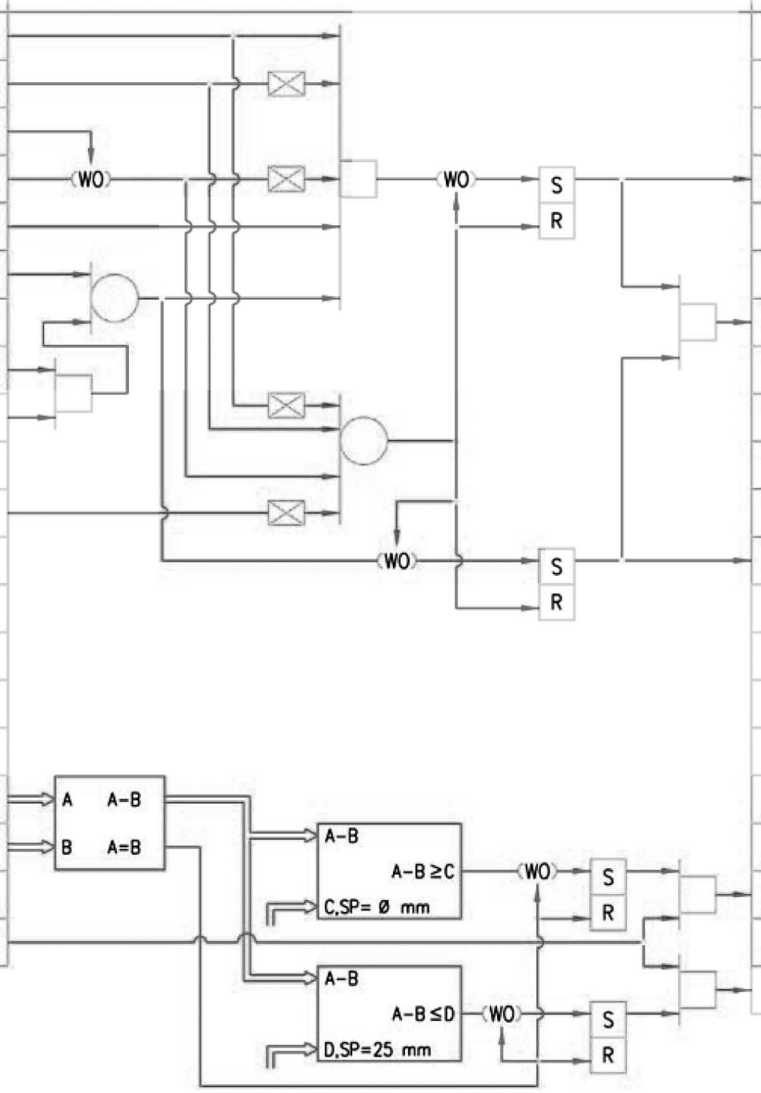

CHANNEL A
TYPICAL OF CHANNEL B

CONTINUOUS WITHDRAWAL LOGIC

FIGURE 7.7-3 ROD CONTROL AND INFORMATION SYSTEM IBD (Sheet 43 of 87)

INPUT					OUTPUT			
REF SH	CLASS	SIGNAL ID	DESCRIPTION	COND-ITION	CLASS	DESCRIPTION	SIGNAL ID	REF SH
	B	2001	ROD INSERT PERMISSIVE	ON				
	B	1009	EMERGENCY INSERT	ON				
	B	3803	ROD FULL IN	ON	B	INSERT	4401	48,50
	B	3808	ROD SELECTED	ON				
	B	0703	RCIS IN CONTINUOUS INSERT DRIVE MODE	ON				
					B	ROD SELECTED CONTINUOUS INSERT	4402	44
	B	1304	INSERT	ON				
	B	1306	CONTINUOUS	ON				
	B	4406	CONTINUOUS INSERT NOT COMPLETED	ON				
					B	CONTINUOUS	4403	47
	B	1101,1102 1204,1303	REFERENCE ROD POSITION					
	B	3804	ROD POSITION					
					B	CONTINUOUS INSERT NOT COMPLETED	4406	44
	B	4402	ROD SELECTED CONTINUOUS INSERT	ON				
					B	SETTLE	4407	47

LOGIC

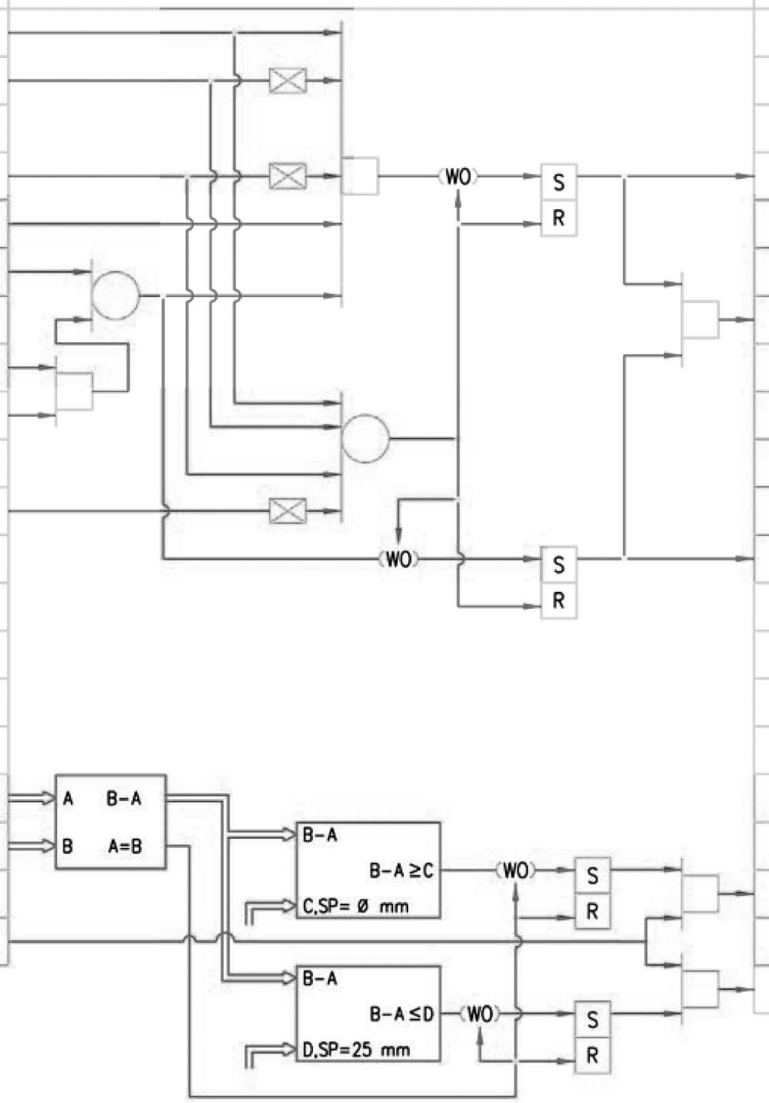

CHANNEL A
TYPICAL OF CHANNEL B

CONTINUOUS INSERT LOGIC

FIGURE 7.7-3 ROD CONTROL AND INFORMATION SYSTEM IBD (Sheet 44 of 87)

INPUT					OUTPUT			
REF SH	CLASS	SIGNAL ID	DESCRIPTION	COND-ITION	CLASS	DESCRIPTION	SIGNAL ID	REF SH
	B	3803	ROD FULL IN	ON				
	B	1008	ROD SELECTED	ON	B	SCRRI INSERT	4501	45,47
	B	1007	SCRRI CONDITION EXISTS	ON				
	B	4507	SCRRI INSERT NOT COMPLETED	ON				
	B	2301	SCRRI UPDATE PERMITTED	ON				
	B	2303	SCRRI TARGET POSITION UPDATE REQUEST	ON				
	B	2304	NEW SCRRI TARGET POSITION					
	B	3804	ROD POSITION	ON				
	B	4501	SCRRI INSERT	ON	B	SCRRI INSERT NOT COMPLETED	4507	
					B	SETTLE	4508	
					B	SCRRI TARGET POSITION ANSWER BACK	4509	25

LOGIC

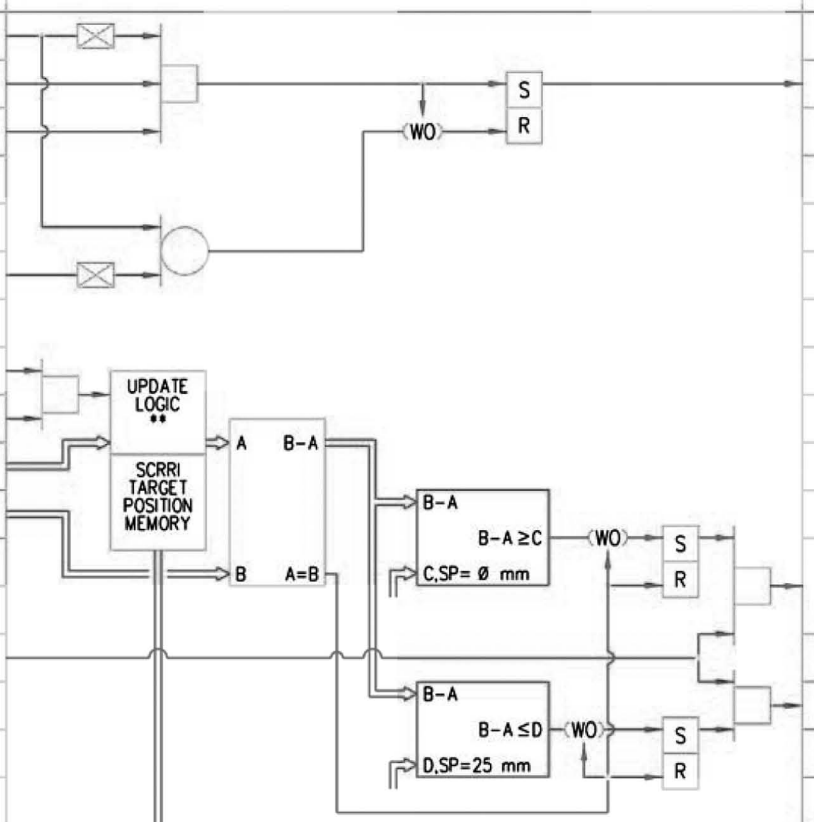

** SCRRI TARGET POSITION MAY BE UPDATED ONLY WHEN UPDATE SCRRI TARGET REQUEST IS ACTIVE WITH THE SCRRI UPDATE PERMIT STATUS ACTIVE, OTHERWISE LAST VALUE IS MAINTAINED IN RSPC BUFFER.

CHANNEL A
TYPICAL OF CHANNEL B

SCRRI EMERGENCY INSERTION & SCRRI TARGET POSITION UPDATE LOGIC

FIGURE 7.7-3 ROD CONTROL AND INFORMATION SYSTEM IBD (Sheet 45 of 87)

INPUT					OUTPUT			
REF SH	CLASS	SIGNAL ID	DESCRIPTION	COND-ITION	CLASS	DESCRIPTION	SIGNAL ID	REF SH
	B	3803	ROD FULL IN	ON				
	B	3808	ROD SELECTED	ON	B	EMERGENCY INSERT	4601	46,47
	B	1009	EMERGENCY INSERT	ON				
	B	4604	CONTINUOUS ARI/SCRAM FOLLOW NOT COMPLETED	ON				
	B	3814	FULL-IN SET POINT	ON				
	B	3804	ROD POSITION	ON				
					B	CONTINUOUS ARI/SCRAM FOLLOW NOT COMPLETED	4604	46
	B	4601	EMERGENCY INSERT	ON				
					B	SETTLE	4605	47

LOGIC

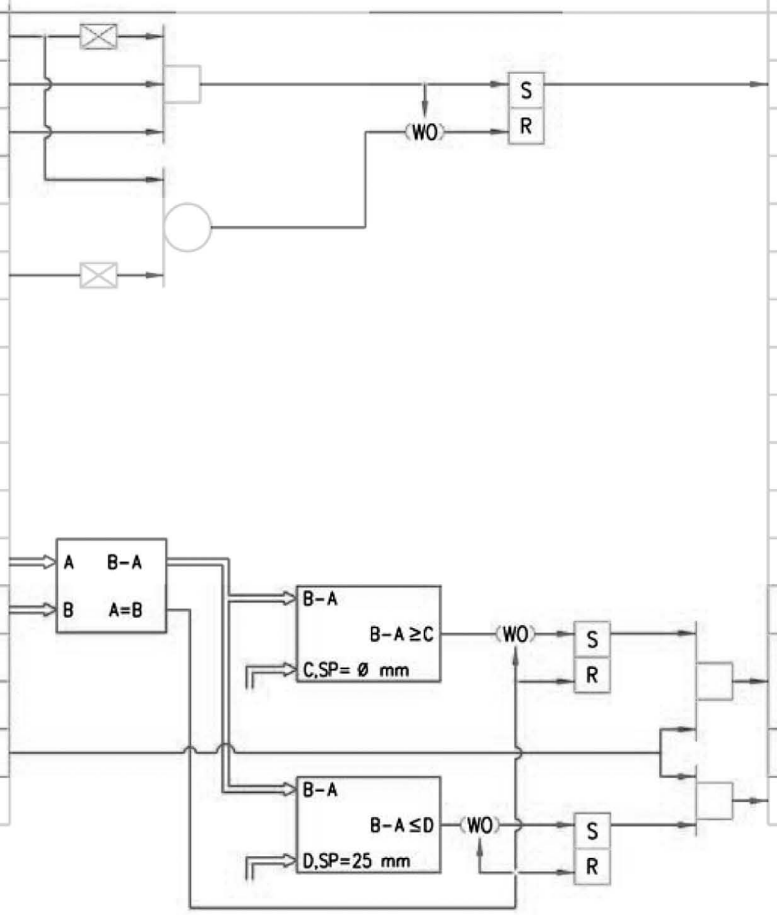

CHANNEL A
TYPICAL OF CHANNEL B

EMERGENCY INSERTION LOGIC

FIGURE 7.7-3 ROD CONTROL AND INFORMATION SYSTEM IBD (Sheet 46 of 87)

INPUT					OUTPUT			
REF SH	CLASS	SIGNAL ID	DESCRIPTION	COND-ITION	CLASS	DESCRIPTION	SIGNAL ID	REF SH
	B	3903	STEP	ON	B	SETP A	4701	54
	B	4003	STEP	ON				
	B	4103	NOTCH	ON	B	NOTCH A	4702	54
	B	4203	NOTCH	ON				
	B	4501	SCRRI INSERT	ON	B	EMERGENCY INSERT	4703	48,49 50,51
	B	4601	EMERGENCY INSERT	ON				
	B	4303	CONTINUOUS	ON	B	CONTINUOUS A	4704	54
	B	4403	CONTINUOUS	ON				
	B	3810	SETTLE	ON	B	SETTLE	4706	55
	B	3811	SETTLE	ON				
	B	4107	SETTLE	ON				
	B	4207	SETTLE	ON				
	B	4307	SETTLE	ON				
	B	4407	SETTLE	ON				
	B	4508	SETTLE	ON				
	B	4605	SETTLE	ON				

LOGIC

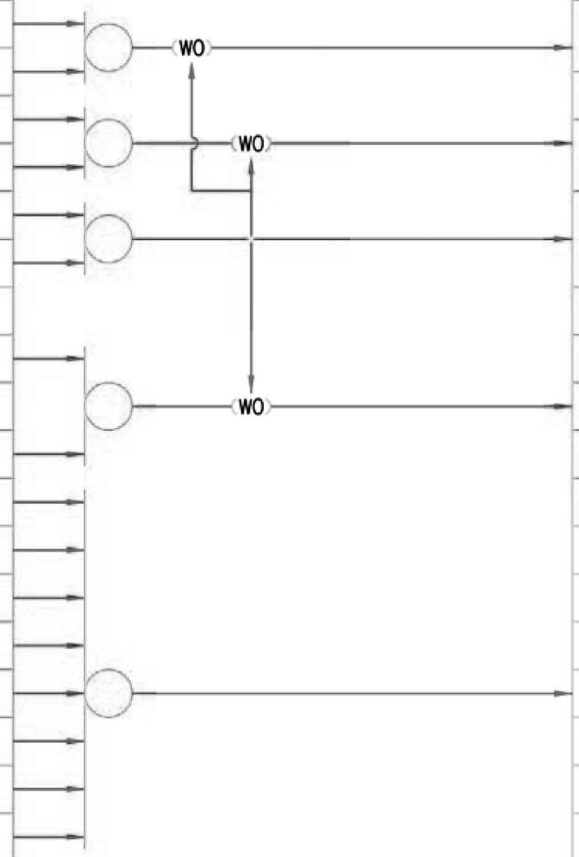

CHANNEL A
TYPICAL OF CHANNEL B

INVERTER CONTROLLER INTERFACE LOGIC

FIGURE 7.7-3 ROD CONTROL AND INFORMATION SYSTEM IBD (Sheet 47 of 87)

INPUT					LOGIC	OUTPUT			
REF SH	CLASS	SIGNAL ID	DESCRIPTION	COND-ITION		CLASS	DESCRIPTION	SIGNAL ID	REF SH
	B	3901	WITHDRAW (STEP)	ON					
	B	4101	WITHDRAW (NOTCH)	ON	WO	B	WITHDRAW A	4801	49,55
	B	4301	WITHDRAW (CONT)	ON					
	B	4001	INSERT (STEP)	ON		B	NORMAL/EMERGENCY ROD MOVEMENT A	4809	51,53
	B	4201	INSERT (NOTCH)	ON	WO	B	INSERT A	4802	49,54
	B	4401	INSERT (CONTINUOUS)	ON					
	B	4703	EMERGENCY INSERT	ON		B	EMERGENCY INSERT	4810	54
					CHANNEL A / TYPICAL OF CHANNEL B				
						B	100% INSERTION OR LATCHED FULL IN	4804	24
REED SW SENSOR MODULE	B		COUPLING CHECK (OVERTRAVEL SWITCH ACTIVATED)	ON		B	COUPLING CHECK (OVER-TRAVEL SW ACTIVATED)	4805	24
RSSM	B		BUFFER CONTACT	ON		B	BUFFER CONTACT	4806	24
RSSM	B		100% INSERTION OR LATCHED FULL IN	ON	TIME TAGGING LOGIC AND MEMORY				
RSSM	B		10% INSERTION	ON		B	ROD SCRAM TIME DATA *	4807	24
RSSM	B		40% INSERTION	ON					
RSSM	B		60% INSERTION	ON					
RSSM	B		0% INSERTION	ON					
RAPI	B		ROD SCRAM DATA REQUEST **	ON					

* TIME TAGGED DATA BASED ON RCIS CLOCK.

** WHEN RCIS DETECTS SCRAM FOLLOW SIGNALS OR SCRAM TEST SIGNALS, RCIS STARTS RECORDING.

INVERTER CONTROLLER/RBC INTERFACE LOGIC AND REED SWITCH DATA COLLECTION AND TRANSFER LOGIC

FIGURE 7.7-3 ROD CONTROL AND INFORMATION SYSTEM IBD (Sheet 48 of 87)

INPUT					LOGIC	OUTPUT			
REF SH	CLASS	SIGNAL ID	DESCRIPTION	COND-ITION		CLASS	DESCRIPTION	SIGNAL ID	REF SH
	B	3804	ROD POSITION			B	DRIFT DETECTION	4901	24
	B	4703	EMERGENCY INSERT	ON		B	NO UNSYNCHRONOUS DETECTION	4902	54
	B	4801	WITHDRAW	ON		B	ROD MOVEMENT FAILURE	4903	24
	B	4802	INSERT	ON					

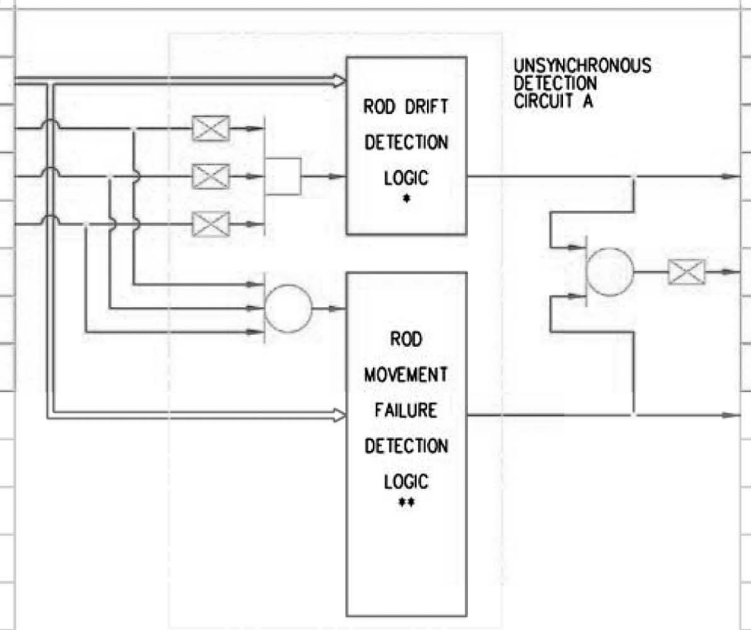

CHANNEL A
TYPICAL OF CHANNEL B

* DRIFT DETECTION OUTPUT BECOMES HIGH WHEN ROD POSITION CHANGES IN THE ABSENCE OF WITHDRAW/INSERT/EMERGENCY INSERT SIGNALS.

** ROD MOVEMENT FAILURE OUTPUT BECOMES HIGH WHEN ROD POSITION DOES NOT CHANGE WHILE ROD MOVEMENT COMMANDS ARE PRESENT.

UNSYNCHRONOUS DETECTION LOGIC

FIGURE 7.7-3 ROD CONTROL AND INFORMATION SYSTEM IBD (Sheet 49 of 87)

INPUT					LOGIC	OUTPUT		
REF SH	CLASS	SIGNAL ID	DESCRIPTION	COND-ITION		CLASS	DESCRIPTION	SIGNAL ID	REF SH
	B	3003	ROD Ai PLACED IN INOP BYPASS	ON					
	B	4703	EMERGENCY INSERT	ON					
	B	2001	ROD INSERT PERMISSIVE	ON		B	ROD MOVEMENT PERMISSIVE	5004	54
	B	5101	RSPC SELF TEST FAILURE	ON					
	B	1901	ROD WITHDRAWAL PERMISSIVE	ON					
	B	4001	INSERT (STEP)	ON					
	B	4201	INSERT (NOTCH)	ON					
	B	4401	INSERT (CONTINOUS)	ON					
RBCC	B		BRAKE TEST PERMISSION KEY LOCK SWITCH "TEST" POSITION *	ON		L	BRAKE TEST	5005	

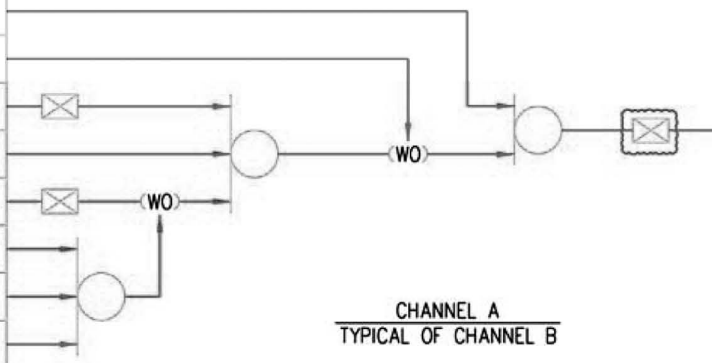

* WHEN BRAKE TEST PERMISSION KEY LOCK SWITCH IS IN THE TEST POSITION, THE CONNECTION TO THE BRAKE SOLENOID IS SWITCHED OVER FROM RBC TO A CONNECTOR FOR BRAKE TEST DEVICE.

BRAKE TEST AND STOP LOGIC

FIGURE 7.7-3 ROD CONTROL AND INFORMATION SYSTEM IBD (Sheet 50 of 87)

INPUT					OUTPUT			
REF SH	CLASS	SIGNAL ID	DESCRIPTION	COND-ITION	CLASS	DESCRIPTION	SIGNAL ID	REF SH
					B	RSPC SELF TEST FAILURE	5101	24,50
RAPI	B		RESET A	ON				
RSPC A	B		LOCAL RESET	ON	D	RESET	5102	55
	B	5505	IC TROUBLE	ON				
	B	4703	EMERGENCY INSERT	ON				
	B	4809	NORMAL/EMERGENCY ROD MOVEMENT A	ON	D	ABNORMAL BRAKE SOLENOID ENERGIZATION	5103	24
	A	5302	BRAKE CURRENT SENSE SIGNAL		B	BRAKE DISENGAGEMENT FAILURE	5104	24

LOGIC

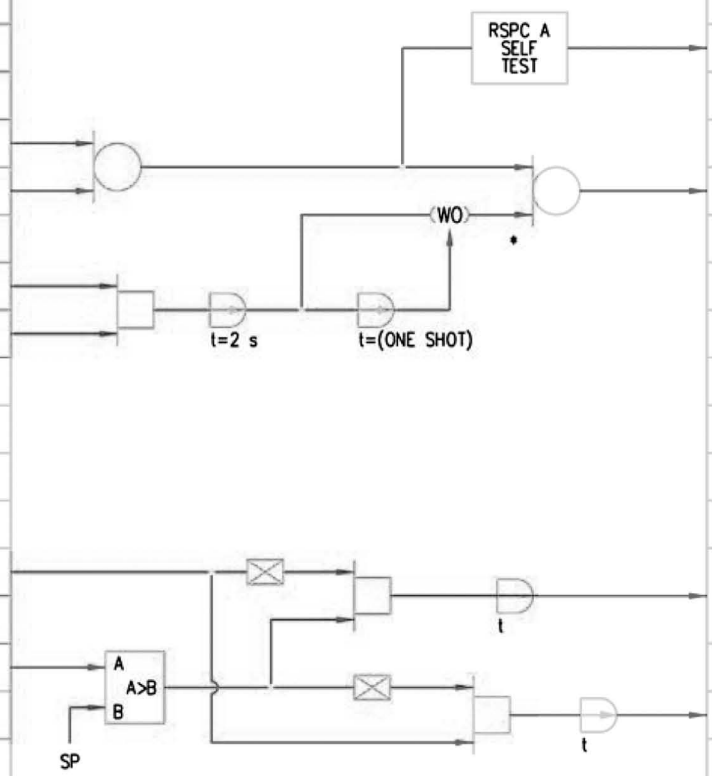

* THIS PROVIDES AUTOMATIC RESTART CAPABILITY IF EITHER ARI CONDITION/SCRAM FOLLOW CONDITION OR SCRRI EXIST.

CHANNEL A
TYPICAL OF CHANNEL B

DIAGNOSTICS AND RESTART LOGIC

FIGURE 7.7-3 ROD CONTROL AND INFORMATION SYSTEM IBD (Sheet 51 of 87)

INPUT					LOGIC	OUTPUT			
REF SH	CLASS	SIGNAL ID	DESCRIPTION	COND-ITION		CLASS	DESCRIPTION	SIGNAL ID	REF SH
	B	5403	STEP	ON	→	B	STEP	5201	25
	B	5404	NOTCH	ON	→	B	NOTCH	5202	25
	B	5402	CONTINOUS	ON	→	B	CONTINOUS	5203	25
	B	5503	SETTLE	ON	→	B	SETTLE	5204	25
	B	5401	EMERGENCY INSERT	ON	→	B	EMERGENCY INSERT	5205	25
	B	5406	INSERT	ON	→	B	INSERT	5206	25
	B	5502	WITHDRAW	ON	→	B	WITHDRAW	5207	25
	B	5405	STOP	ON	→	B	STOP	5208	25
	B	5802	INVERTER TROUBLE	ON	→	B	INVERTER TROUBLE	5209	25
	B	5505	INVERTER CONTROLLER TROUBLE	ON	→	B	INVERTER CONTROLLER TROUBLE	5210	25

CHANNEL A
TYPICAL OF CHANNEL B

IC SIGNAL
TRANSFER TO RAPI

FIGURE 7.7-3 ROD CONTROL AND INFORMATION SYSTEM IBD (Sheet 52 of 87)

INPUT					LOGIC	OUTPUT			
REF SH	CLASS	SIGNAL ID	DESCRIPTION	COND-ITION		CLASS	DESCRIPTION	SIGNAL ID	REF SH
	B	4809	NORMAL/EMERGENCY ROD MOVEMENT CHANNEL A	ON					
		4809(B)	NORMAL/EMERGENCY ROD MOVEMENT CHANNEL B	ON		D	BRAKE SOLENOID ENERGIZATION SIGNAL	5301	BRAKE POWER SUPPLY
	B	2803	RSPC-A BYPASSED	ON					
	B	2813	RSPC-B BYPASSED	ON					
					BRAKE CURRENT SENSE SIGNAL CHANNEL A	A	BRAKE CURRENT SENSE SIGNAL	5302	51
					BRAKE CURRENT SENSE SIGNAL CHANNEL B	A	BRAKE CURRENT SENSE SIGNAL	5303	51(B)

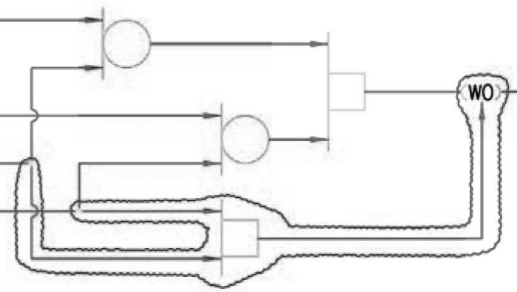

NOTE: ROD BRAKE CONTROLLER LOGIC IS A SINGLE CHANNEL LOGIC.

ROD BRAKE CONTROLLER LOGIC

FIGURE 7.7-3 ROD CONTROL AND INFORMATION SYSTEM IBD (Sheet 53 of 87)

INPUT					LOGIC	OUTPUT			
REF SH	CLASS	SIGNAL ID	DESCRIPTION	COND-ITION		CLASS	DESCRIPTION	SIGNAL ID	REF SH
	B	4810	EMERGENCY INSERT A	ON	SELECTION LOGIC DETAIL A *				
	B	4810(B)	EMERGENCY INSERT B	ON		B	EMERGENCY INSERT	5401	52.57
ERIP **	B		EMERGENCY INSERT	ON					
	B	4704	CONTINUOUS A	ON	SELECTION LOGIC DETAIL A *				
	B	4704(B)	CONTINUOUS B	ON		B	CONTINUOUS	5402	52.56
	B	4701	STEP A	ON	SELECTION LOGIC DETAIL A *				
	B	4701(B)	STEP B	ON		B	STEP	5403	52.56
	B	4702	NOTCH A	ON	SELECTION LOGIC DETAIL A *				
	B	4702(B)	NOTCH B	ON		B	NOTCH	5404	52.56
	B	5004	ROD MOVEMENT PERMISSIVE A	ON	SELECTION LOGIC DETAIL A *				
	B	5004(B)	ROD MOVEMENT PERMISSIVE B	ON		B	ROD MOVEMENT PERMISSIVE	5405	57
						B	STOP	5415	52
	B	4802	INSERT A	ON	SELECTION LOGIC DETAIL A *				
	B	4802(B)	INSERT B	ON		B	INSERT	5406	52.56
	B	4902	NO UNSYNCHRONOUS DETECTION A	ON	SELECTION LOGIC DETAIL A *				
	B	4902(B)	NO UNSYNCHRONOUS DETECTION B	ON					
	B	2813	RSPC-B BYPASSED	ON					
	B	2803	RSPC-A BYPASSED	ON		B	NO UNSYNCHRONOUS DETECTION	5407	57
	B	3808	ROD SELECTED A	ON	SELECTION LOGIC DETAIL A *				
	B	3808(B)	ROD SELECTED B	ON		B	ROD SELECTED	5408	57

** EMERGENCY ROD INSERTION PANEL

* SEE DETAIL A ON SHEET 66

FIGURE 7.7-3 ROD CONTROL AND INFORMATION SYSTEM IBD (Sheet 54 of 87)

INPUT					LOGIC	OUTPUT			
REF SH	CLASS	SIGNAL ID	DESCRIPTION	COND-ITION		CLASS	DESCRIPTION	SIGNAL ID	REF SH
	B	2803	RSPC-A BYPASSED	ON					
	B	2813	RSPC-B BYPASSED	ON					
	B	4801	WITHDRAW A	ON	SELECTION LOGIC DETAIL A	B	WITHDRAW	5502	52,56
	B	4801(B)	WITHDRAW B	ON					
	B	4706	SETTLE A	ON	SELECTION LOGIC DETAIL A	B	SETTLE	5503	52,57
	B	4706(B)	SETTLE B	ON					
	B	5102	RESET A	ON	SELECTION LOGIC DETAIL A; RESET ROUTINE NOTE 1	L	RESET FAILURE DISPLAY	5504	LOCAL
	B	5102(B)	RESET B	ON					
	B		LOCAL RESET	ON					
	B		VALIDATION ERROR (NOTE 7)	ON	DETAIL A	B	IC TROUBLE	5505	51,52 57
	B		POWER ON (NOTE 3)	ON	NOTE 3 SELF TEST ROUTINE	L	SELF TEST FAILURE DISPLAY (NOTE 3)	5506	LOCAL

FIGURE 7.7-3 ROD CONTROL AND INFORMATION SYSTEM IBD (Sheet 55 of 87)

INPUT					LOGIC	OUTPUT			
REF SH	CLASS	SIGNAL ID	DESCRIPTION	COND-ITION		CLASS	DESCRIPTION	SIGNAL ID	REF SH
	B	5502	WITHDRAW	ON					
						B	CONTINUOUS WITHDRAW	5601	57
	B	5402	CONTINUOUS	ON					
						B	CONTINUOUS INSERT	5602	57
	B	5403	STEP	ON		B	STEP WITHDRAW	5603	57
						B	STEP INSERT	5604	57
						B	NOTCH WITDRAW	5605	57
	B	5404	NOTCH	ON		B	NOTCH INSERT	5606	57
	B	5406	INSERT	ON					

FIGURE 7.7-3 ROD CONTROL AND INFORMATION SYSTEM IBD (Sheet 56 of 87)

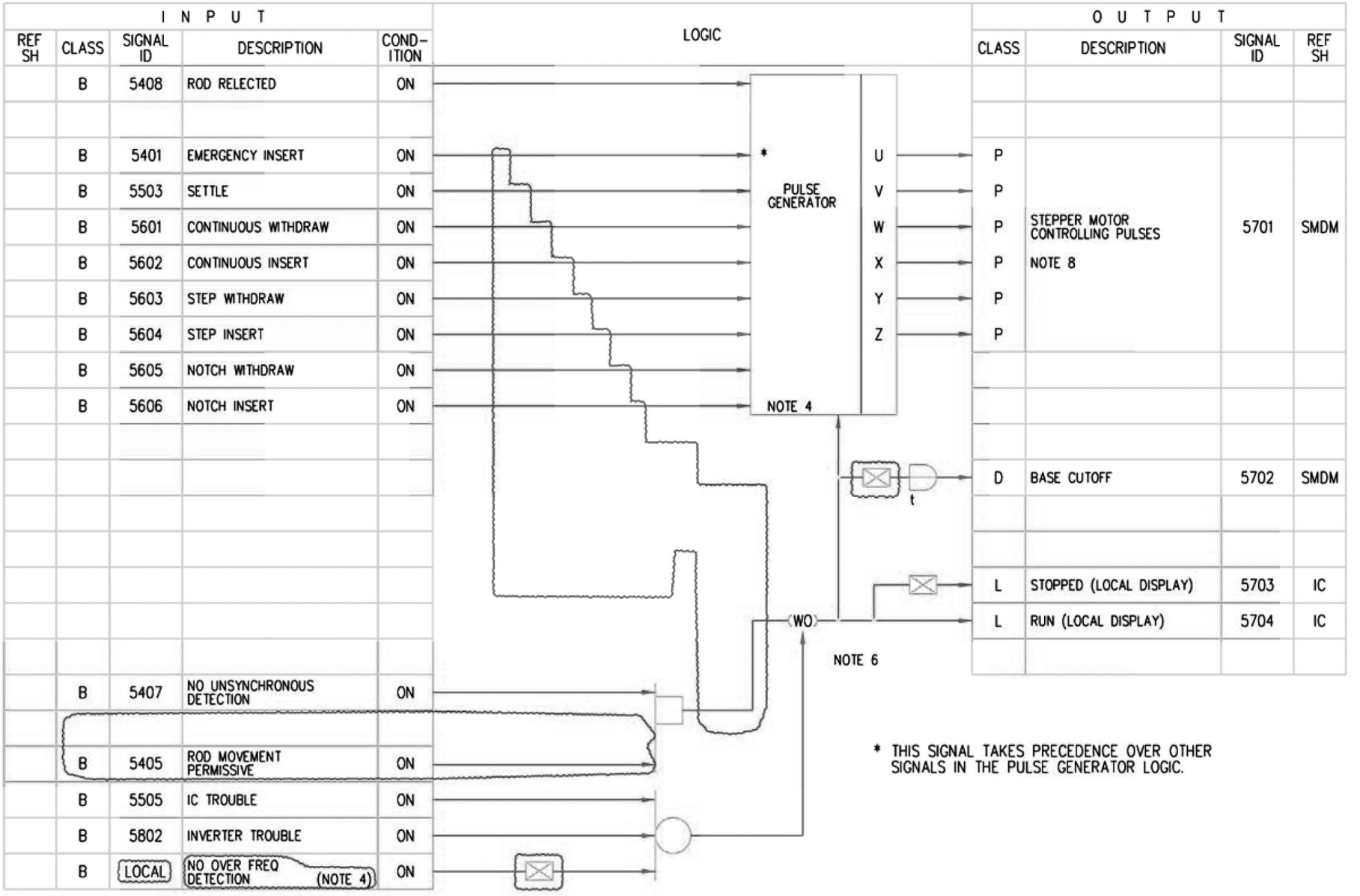

FIGURE 7.7-3 ROD CONTROL AND INFORMATION SYSTEM IBD (Sheet 57 of 87)

INPUT					LOGIC	OUTPUT			
REF SH	CLASS	SIGNAL ID	DESCRIPTION	COND-ITION		CLASS	DESCRIPTION	SIGNAL ID	REF SH
						L	INVERTER TROUBLE DISPLAY	5801	IC
SMDM	B		FUSE FAILURE	ON					
SMDM	B		ABNORMAL VOLTAGE	ON		B	INVERTER TROUBLE	5802	52,57
SMDM	B		OVER CURRENT	ON					
						L	FUSE FAILURE DISPLAY		IC
						L	ABNORMAL VOLTAGE DISPLAY		IC
						L	OVERCURRENT DISPLAY		IC

FIGURE 7.7-3 ROD CONTROL AND INFORMATION SYSTEM IBD (Sheet 58 of 87)

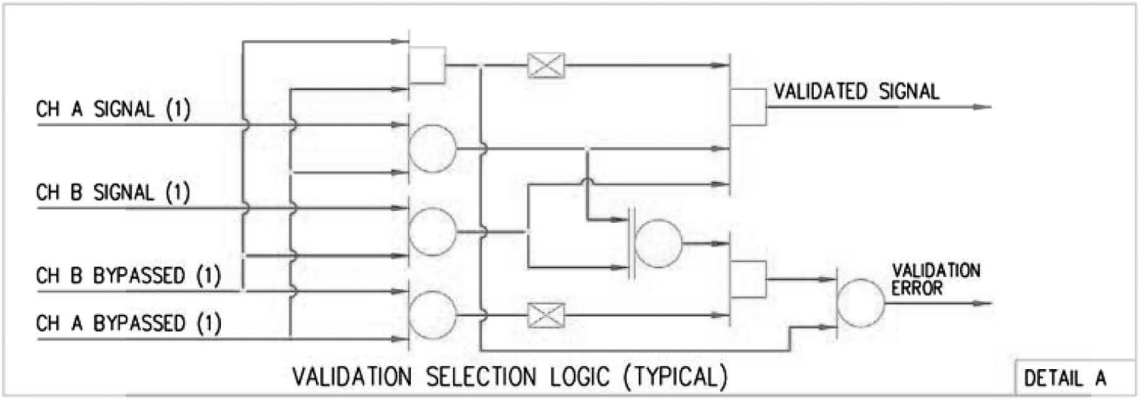

NOTES:

1. RESET FAILURE SIGNAL IS ISSUED BY IC WHEN THE RESET ROUTINES TO BE COMPLETED BY THE MICROPROCESSOR ARE NOT SUCCESFULLY ACCOMPLISHED. GENERATION OF THIS SIGNAL SHALL BE AN INTEGRAL PART OF THE RESET ROUTINES OF THE HARDWARE. THE IC SHALL CONDUCT AUTOMATICALLY A RESET ROUTINE WHEN RECOVERING FROM A PRIOR FAILURE/TROUBLE CONDITION.

2. THE IC HARDWARE SHALL UTILIZE A WATCHDOG TIMER TO MONITOR THE UPDATES OF EACH SIGNAL FROM RSPC. THE TIMER SHALL COUNTDOWN FROM A PREDETERMINED AMOUNT OF TIME TO 0 AND RESET TO (TIME TO BE DETERMINED IN DETAILED DESIGN PHASE) ms AUTOMATICALLY ON EVERY UPDATE OF SIGNAL. WHEN TIMER COUNTS DOWN TO ZERO ON ANY INPUT SIGNAL FROM THE RSPC, IT SHALL PROVIDE A TIME OUT SIGNAL.

3. SELF TEST FEATURES SHALL INCLUDE THE ROUTINES OF CHECKING THE PROCESSOR RAM, ROM AND BUFFERS. WHEN THE SELF TEST IS NOT COMPLETED SUCCESFULLY. THE IC HARDWARE SHALL ISSUE A SELF TEST FAILURE SIGNAL. SELF TEST SHALL BE EXECUTED WHEN THE IC POWER IS TURNED ON. THE IC RECEIVES A RESET COMMAND FROM RSM. OR THE IC RECOVERS FROM A PRIOR FAILURE/TROBLE, AND ON A CONTINUOUS BASIS FROM THEN ON.

4. PULSE GENERATOR COMPRISES OF FREQUENCY LIMITER, PULSE DISTRIBUTOR AND OTHER NECESSARY HARDWARE. IT GENERATES APPROPRIATE PULSES CORRESPONDING TO THE INPUT DRIVE COMMAND TO PRODUCE THE REQUIRED SPEED PATTERN OF THE STEPPING MOTOR (SM) TO MOVE THE ROD TO THE REQUIRED POSITION APPROPRIATELY. THE OUTPUT OF THE PULSE GENERATOR IS ENABLED BY ALLOWABLE CONDITIONS, AS SHOWN, TO DRIVE THE STEPPING MOTOR.

5. ALGORITHM FOR IDENTIFIED FUNCTIONS AND LOGICS ARE DESCRIBED IN C11-4020 AND SCRAM TIME DATA IN C11-4010.

6. DEDICATED DISPLAY INDICATION SHALL BE PROVIDED FOR RUN, STOPPED, IC TROUBLE, INVERTER TROUBLE AND RESET CONDITIONS. IN THE EVENT OF EITHER A IC TROUBLE OR INVERTER TROUBLE CONDITION, THE FAILURE CAUSING SUCH CONDITION SHALL BE DISPLAYED.

7. VALIDATION ERROR SIGNAL IS GENERATED WHEN CHANNEL A & B ARE NOT BYPASSED AND CHANNELS A & B SIGNALS DO NOT MATCH. TYPICAL OF THESE SIGNALS ARE "ORED" TO PRODUCE ONE VALIDATION ERROR SIGNAL TO INDICATE IC TROUBLE.

8. THE CHARACTERISTICS OF THE UVWXYZ PULSES ARE DETERMINED BY THE IC (PULSES GENERATOR) ARCHITECTURE, THE INVERTER DESIGN AND THE PERFORMANCE CHARACTERISTICS CURVES OF THE SM, TO ACCURATELY MOVE THE CONTROL ROD BY SPECIFIED DISTANCE AS DEFINED BY THE RC&IS DESIGN.

FIGURE 7.7-3 ROD CONTROL AND INFORMATION SYSTEM IBD (Sheet 59 of 87)