2.6 Reactor Auxiliary Systems

The information in this section of the reference ABWR DCD, including all subsections, tables, and figures is incorporated by reference with the following departure to Figure 2.6.2.

STD DEP T1 2.4-1

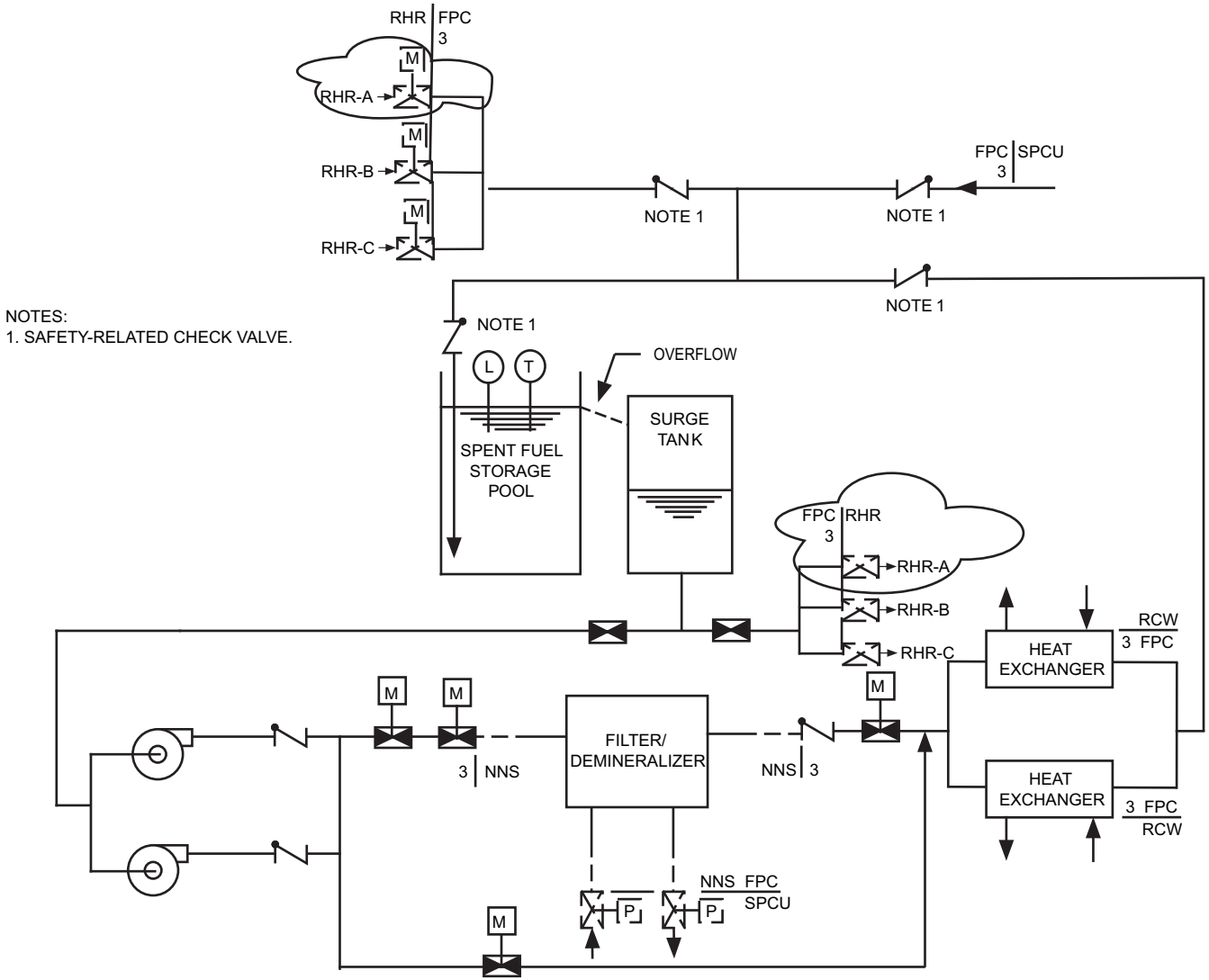

Figure 2.6.2 Fuel Pool Cooling and Cleanup System