Luminant

MNES
MITSUBISHI NUCLEAR ENERGY SYSTEMS, INC.

Comanche Peak Nuclear Power Plant Units 3 and 4

COLA Orientation DCWG Meeting

October 7, 2008

Luminant

MNES

Opening Remarks

Mitch Lucas
VP, Nuclear Engineering & Support
Luminant

Luminant

MNES

NuBuild Project Overview

- Significant Milestones
  - Project started - August 2006
  - COLA submitted - September 2008
  - COLA docketing target - November 2008
  - Obtain COL – schedule to be determined
  - Construction start – depends on COL schedule

Luminant

MNES

Overview (cont'd)

- Project Team Principles
  - Safety is highest priority for NuBuild development
  - Optimize regulatory and financial certainty
  - High quality is basis to strengthen certainty
  - Optimize DCD / reference COLA relationship
  - Meet committed RAI response dates
  - Develop business case for merchant owner

Luminant

MNES

Overview (cont'd)

- NuBuild Objectives
  - Provide dependable source of electrical power to ERCOT
  - Develop equitable ROI for owners
  - Strengthen environment stewardship
  - Sustain strong community relationship
  - Continue and enhance regulatory communications and relationship

Luminant

MNES

Introductions and Meeting Objectives

Don Woodlan
Manager, Nuclear Regulatory Affairs
Luminant

Luminant

MNES

Meeting Objectives

- Introduce project team
- Describe COLA format and content
- Obtain NRC comments/feedback (questions, emergent issues)
- Set tone for next phase of project

Luminant

MNES

Agenda

- **Opening Remarks** – Mitch Lucas
- **Introductions and Meeting Objectives** – Don Woodlan
- **Site Description** – Tim Gilder
- **COLA Content** – Todd Evans
- **FSAR Format, Style, and Content** – Matt Weeks
- **FSAR Standardization Matrix** – Joe Tapia
- **Quality Assurance** – Ron Carver
- **Summary and Conclusions** – Don Woodlan
- **Closing Remarks** – Mitch Lucas

Luminant

MNES

US-APWR DCWG

- Formed in April 2007
- Current membership – Luminant Power and Mitsubishi Nuclear Energy Systems (MNES)
- Provided a single response to RIS 2007-08 in May 2007
- Public meetings with NRC in June and October of 2007, and February, April, July, and October of 2008

Luminant

MNES

Project Goals (Unchanged)

- Develop and deliver to the NRC a high quality COLA
- Submit COLA by September 2008
- Ensure COLA docketing to qualify for PTCs
- Execute aggressive project schedule by applying "lean" techniques
- Maximize integration between DCD and COLA
- Provide timely and complete responses to NRC RAIs
- Develop a business case which provides Luminant the best financial alternative to market power in ERCOT

Luminant

MNES

COLA Status

Site exploration: 100%complete

FSAR Chapter 2: 100% complete

FSAR (remainder): 100% complete

ER sections: 100% complete

Conceptual engineering: 100% complete

Total COLA: 100% complete

Luminant

MNES

COLA Submittal

- Notified the NRC in writing (TXNB-08020 dated June 13, 2008) that Luminant intends to submit the CPNPP Units 3 and 4 COLA on September 19, 2008
- COLA submitted September 19, 2008

Luminant

MNES

Site Description

Tim Gilder
Site Manager
Luminant

Luminant

MNES

Comanche Peak Site Description

- ~40 mi SW of Ft. Worth
- ~7950-acre site where CPNPP Units 1 & 2 currently operate (1220 MWe 4-loop W PWRs)
- ~3200-acre Squaw Creek Reservoir for cooling Units 1 & 2 only
- Lake Granbury provides cooling tower makeup for Units 3 & 4
- Predictable, homogenous geology
- DCD site parameters envelope site characteristics
- Very strong community support


OKLAHOMA
Oklahoma City
Amarillo
Wichita Falls
Lubbock
Roswell
ESTACADO
LLANO
Carlsbad
Hobbs
Abilene
Big Spring
Midland
Odessa
TEXAS
Fort Worth
Dallas
Plano
Garland
Irving
Arlington
Denton
McKinney
Sherman
Paris
Tyler
Longview
Nacogdoches
Waco
Killeen
Temple
Georgetown
Round Rock
Austin
Cedar Park
Bryan
College Station
Huntsville
Conroe
Beaumont
Houston
Pasadena
Texas City
Galveston
Lake Jackson
San Antonio
New Braunfels
San Marcos
San Angelo
Del Rio
Victoria
Tulsa
Broken Arrow
Muskogee
Stillwater
Norman
Shawnee
Lawton
Ardmore
Fort Smith
Springdale
Payetteville
Texarkana
Longview
Tyler
Lufkin
Saybrook
Port Arthur

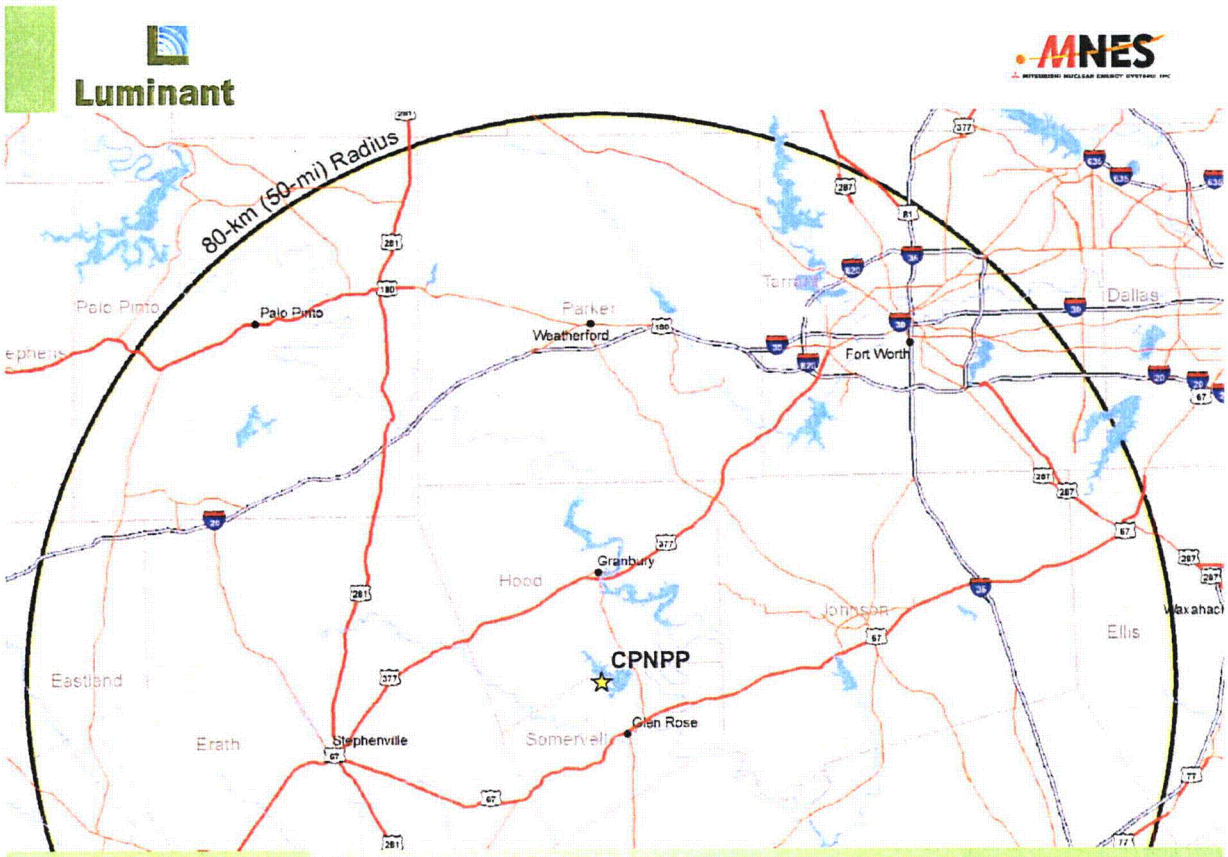
Luminant
MNES
80-km (50-mi) Radius
Palo Pinto
Palo Pinto
Parker
Weatherford
Tarrant
Fort Worth
Dallas
Hood
Granbury
Johnson
Ellis
Waxahachie
CPNPP
Eastland
Erath
Stephenville
Somervell
Glen Rose

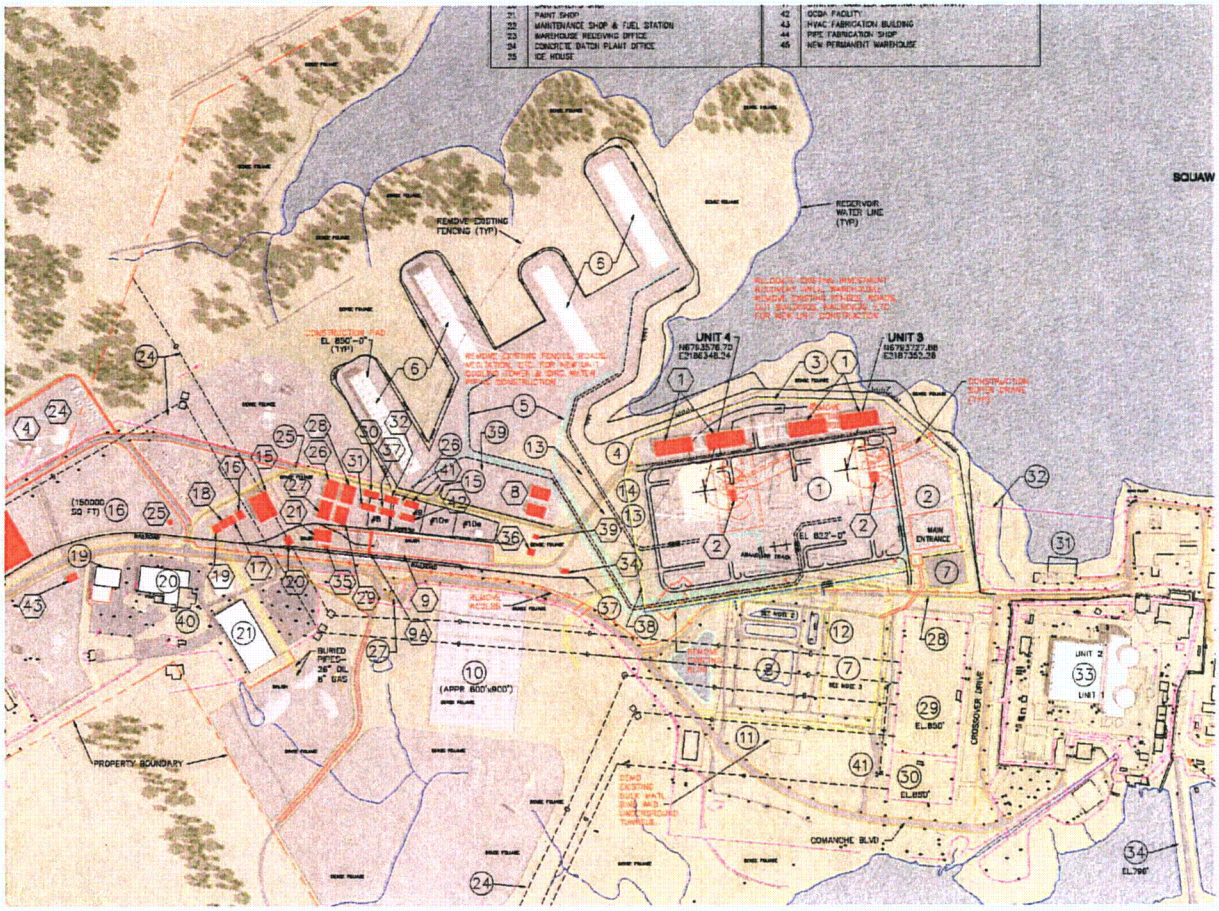
PAINT SHOP
MAINTENANCE SHOP & FUEL STATION
WAREHOUSE RECEIVING OFFICE
CONCRETE BATCH PLANT OFFICE
ICE HOUSE
OCDA FACILITY
HVAC FABRICATION BUILDING
PIPE FABRICATION SHOP
NEW PERMANENT WAREHOUSE
REMOVE EXISTING FENCING (TYP)
RESERVOIR WATER LINE (TYP)
UNIT 4
UNIT 3
MAIN ENTRANCE
PROPERTY BOUNDARY
COMANCHE BLVD
CROSSOVER DRIVE
UNIT 2
UNIT 1

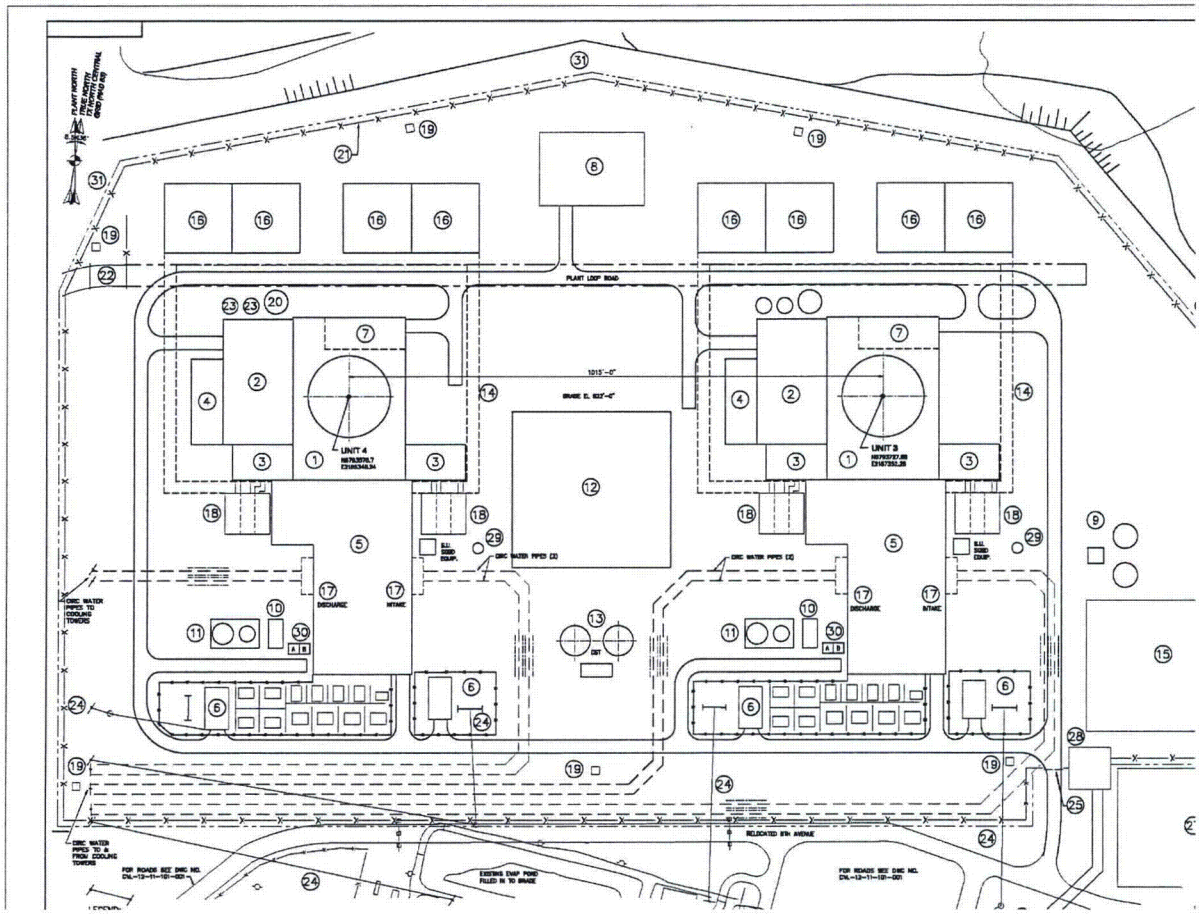
PLANT LOOP ROAD
UNIT 4
UNIT 3
DISCHARGE
INTAKE
CIRC WATER PIPES TO COOLING TOWERS
CIRC WATER PIPES TO & FROM COOLING TOWERS
RELOCATED 8TH AVENUE


Glen Rose Hwy
167
3210
51
2425
2174
144
56
199
67
200
© 2007 Europa Technologies
Image © 2007 DigitalGlobe
© 2007 Navteq
Streaming 100%
Eye alt 13.33

Luminant

MNES

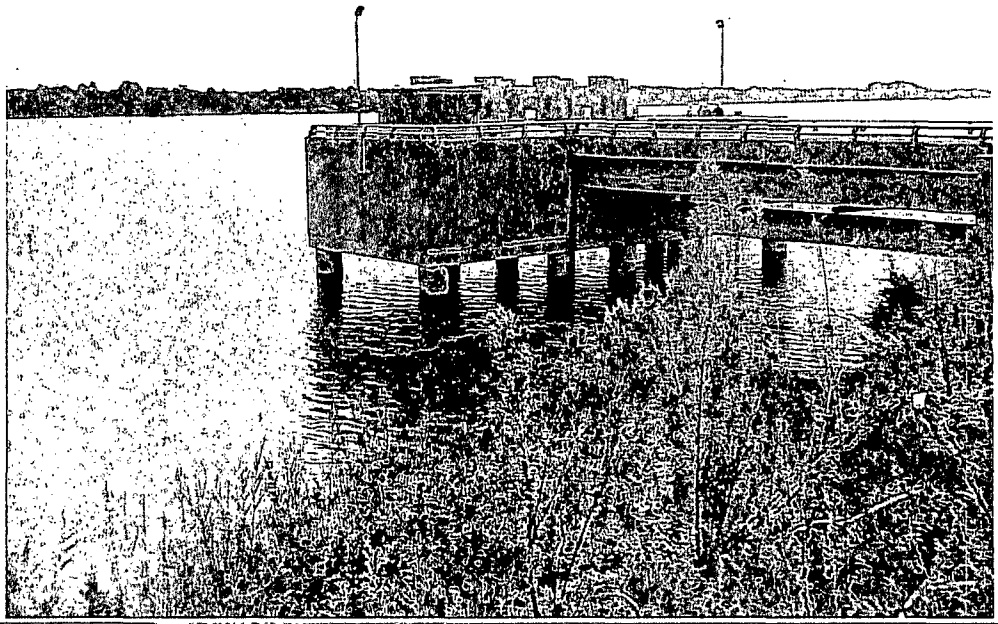

Luminant

MNES

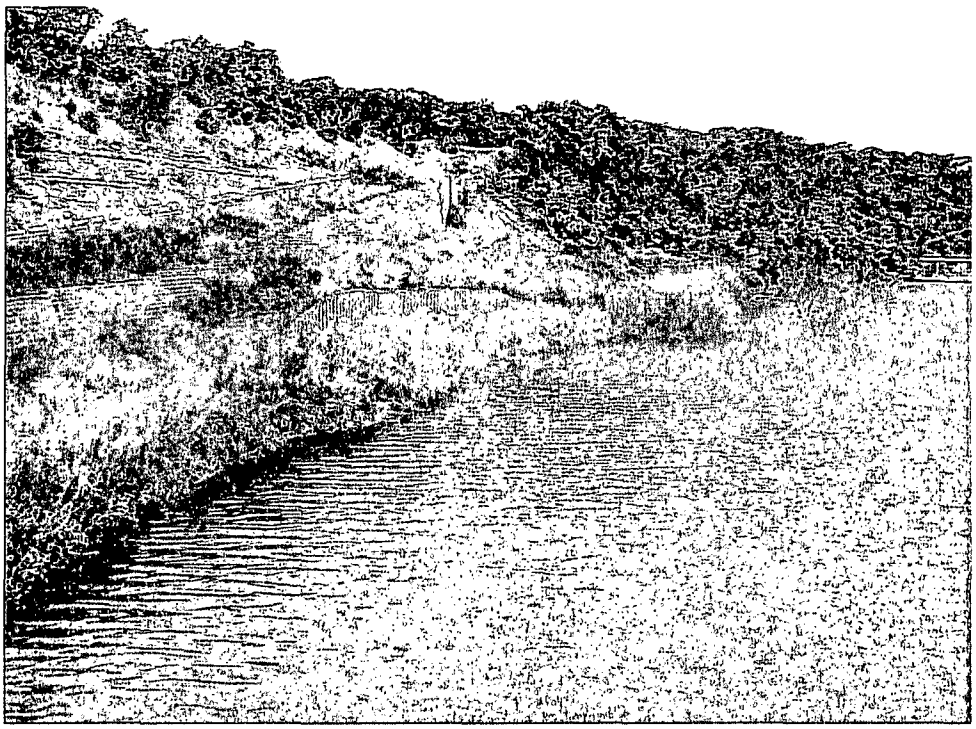

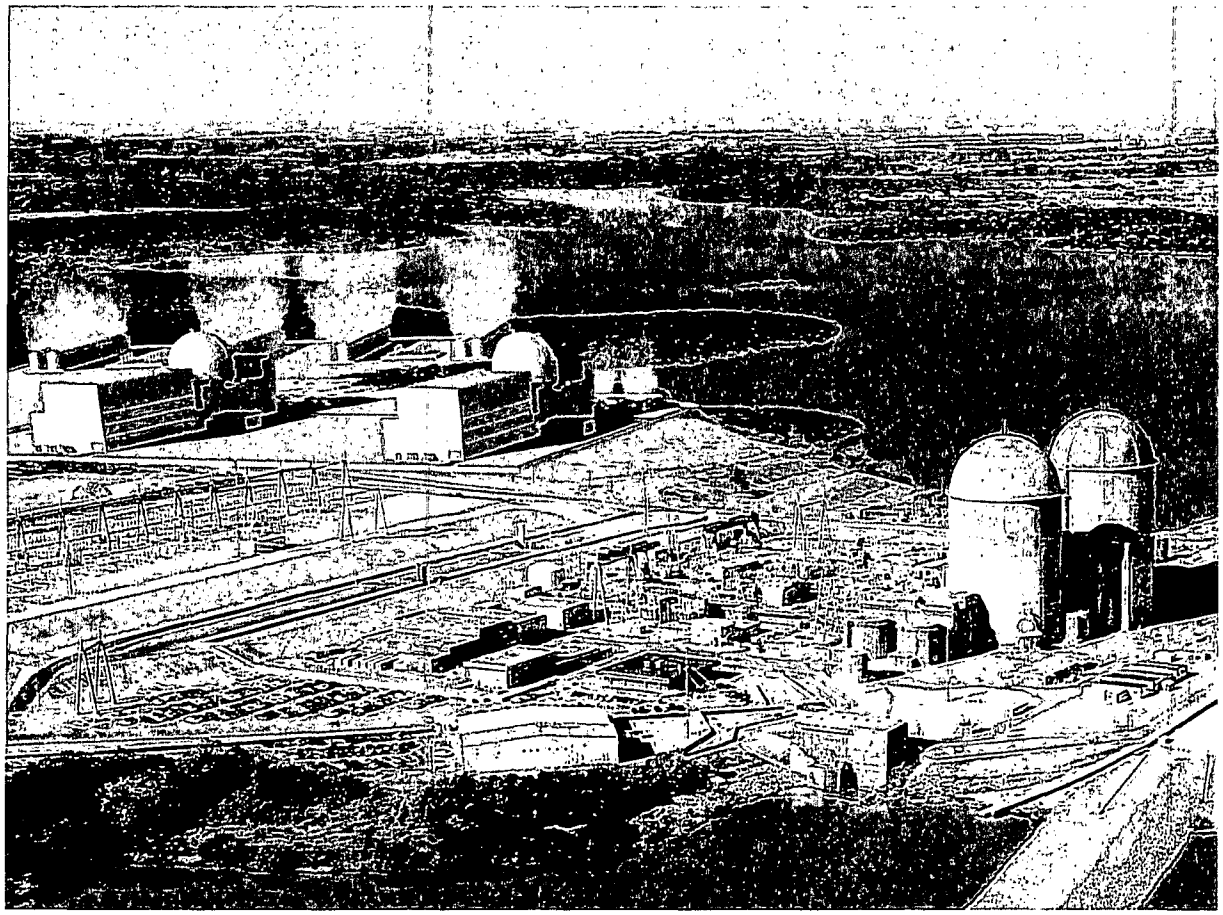

Luminant

MNES

COLA Content

Todd Evans
Operating System Manager
Luminant

Luminant

MNES

COLA Content

- **COLA Parts**
  - **Part 1, General and Administrative Information**
  - **Part 2, Final Safety Analysis Report (FSAR)**
  - **Part 3, Environmental Report (ER)**
  - **Part 4, Technical Specifications**
  - **Part 5, Emergency Plan**
  - **Part 6, Site Redress and LWA (not used)**
  - **Part 7, DCD Departures Report (not used)**
  - **Part 8, Composite Security Plan (SGI under separate cover)**

Luminant

MNES

COLA Parts (cont'd)

- Part 9, SUNSI Information (not used)
- Part 10, Inspections, Tests, Analyses, and Acceptance Criteria and Proposed License Conditions
- Part 11, Attachments (QAPD)

- Electronic links included in ER, but will also be in FSAR in the future

Luminant

MNES

Part 3, Environmental Report

- NRC familiar with ER, FSAR Ch 2, and site through C-1, C-2, C-3, and pre-application site visits

- ER follows format and content of NUREG-1555

Luminant

MNES

Environmental Report (cont'd)

- **Has 10 sections not currently required by NUREG-1555**

1.3	Methodology
2.9	Existing Plant Parameters and Site Characteristics
3.9	Construction Activities
3.10	Workforce Characterization
4.7	Cumulative Impacts Related to Construction Activities
4.8	Nonradiological Health Impacts – Construction
5.11	Cumulative Impacts Related to Station Operation
5.12	Impacts of Transportation of Radioactive Materials
5.13	Nonradiological Health Impacts during Operations
10.5	Cumulative Impacts

Luminant

MNES

Part 4, Technical Specifications

- **RMTS and SFCP developed for the DCD under Initiatives 4b and 5b**
- **DCD Technical Specifications and Bases are IBR**
- **All bracketed information is provided**

Luminant

MNES

Part 5, Emergency Plan

- Site-specific licensee EP for CPNPP 3 & 4
- Planning basis draws extensively on CPNPP 1 & 2 EP
- Existing CPNPP 1 & 2 EPZ serves as EPZ for CPNPP 3 & 4
- Format directly follows NUREG-0654, Rev 1
- Includes certifications, state and local plans, and ETE
- Uses NEI 99-01 and NEI 07-01 for EALs
- EP ITAAC provided in COLA Part 10

Luminant

MNES

Part 7, Departures and Exemptions

NONE

Luminant

MNES

Part 10, ITAAC and Proposed License Conditions

- Security ITAAC are IBR
  - Will adopt final NRC/NEI resolution
- EP ITAAC
  - Follow SECY 05-0197
  - Same approach as Bellefonte, Lee, North Anna, Grand Gulf
  - Will adopt final NRC/NEI resolution

Luminant

MNES

Part 10, ITAAC (cont'd)

- Site-specific ITAAC
  - UHS and ESW design beyond DCD scope
  - UHS ESW pump house ventilation system
  - Plant-specific structures
    - UHS-related structures
    - ESW pipe tunnel
    - Power source fuel storage vault
- Possible topics for future License Conditions

ITAAC completion	COL Holder Items
Operational Programs	Tech Specs
Environmental Protection Plan	

Luminant

MNES

FSAR Format, Style, and Content

Matt Weeks
Engineering
Luminant

Luminant

MNES

FSAR Format, Style, and Content

- MHI US-APWR DCD Rev. 1 incorporated by reference (IBR)
- Format described in DCD Subsection 1.1.6 (IBR) and FSAR Subsection 1.1.6
- Supplement and COL Item numbering
  - CP SUP – site-specific supplement
  - STD SUP – standard supplement for all S-COLAs
  - CP COL – site-specific resolution of COL Item
  - STD COL – standard resolution of COL Item for all S-COLAs
  - Sequentially numbered within a section "x.y(#)"

Luminant

MNES

FSAR Format, Style, and Content (cont'd)

- Text additions have left margin notation
- Revised DCD tables and figures included in FSAR
  - Table changes marked with SUP or COL #
  - Figure changes marked with clouds
  - DCD number retained with "R" added (e.g., Table 1.8-1R)
- FSAR-specific tables, figures, and references are numbered beginning with "x.y-201"
- FSAR follows DCD, RG 1.206, and SRPs

Luminant

MNES

Chapter 1, Introduction and General Description

- Includes new Section 1.10, Hazards Posed by Construction to Operating Units
- Table 1.8-201 lists COL Item status and cross-references
  - 389 total COL Items from DCD Rev 1
  - 299 will be resolved before COL
  - 90 "COL Holder Items" to be resolved after COL

Luminant

MNES

Chapter 3, Site-Specific Seismic Category I Structures

- UHS basins
- UHS cooling tower enclosures
- ESW pump house
- ESW pipe tunnel
- Power source fuel storage vault

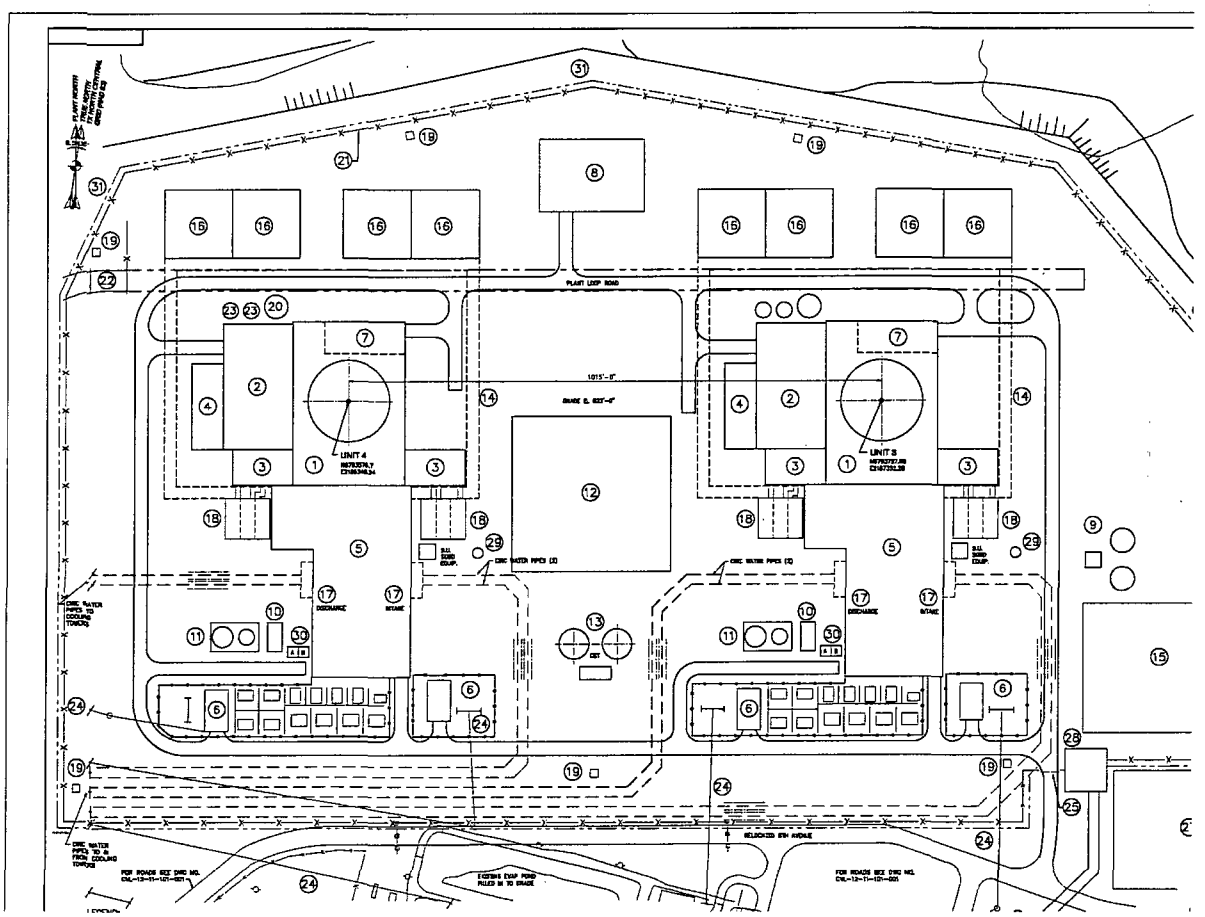

Luminant

MNES

Chapter 3 (Slide 3 of 6)

- UHS basin
  - Four basins per unit
  - Separate foundation for each basin
  - Each basin supports one cooling tower with two cells
- Cooling tower enclosure
  - Houses equipment required to cool ESW
  - Air intakes on opposite faces
  - Tornado missile-protected

Luminant

MNES

Chapter 3 (Slide 4 of 6)

- ESW pump house (integral part of UHS basin)
  - Located at SW corner of each UHS basin
  - Supported by UHS basin walls
  - Houses ESW pump and ESW transfer pump
  - Deep pump bay separated from UHS basin
- ESW pipe tunnel
  - Closed, rectangular underground concrete structure
  - Two separate sections for train separation
  - Each section contains both ESW supply and return
  - Top of tunnel 12 feet below grade

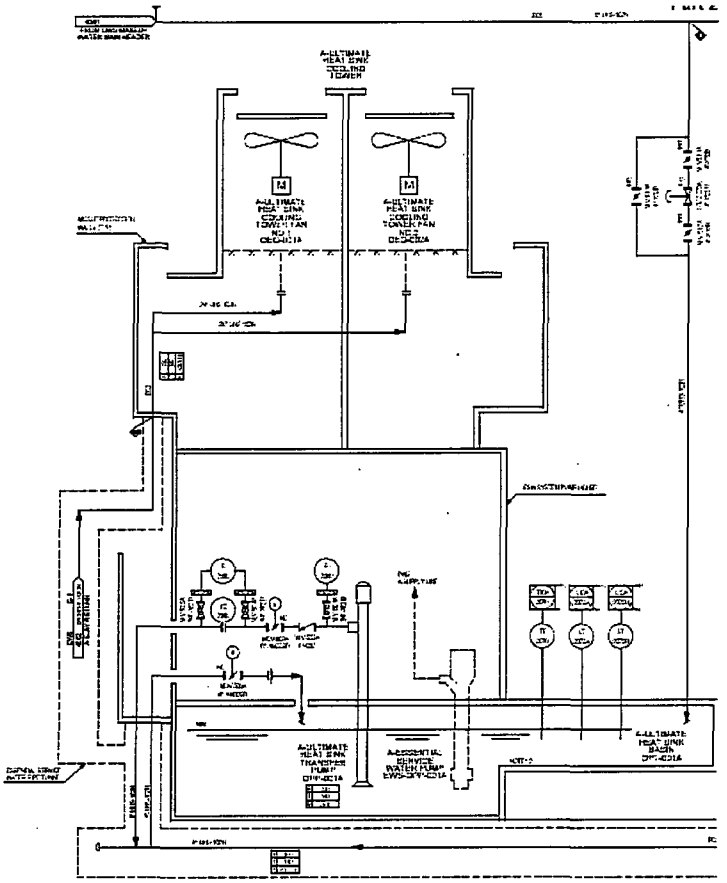

Luminant

MNES

Chapter 3 (Slide 6 of 6)

- **Power source fuel storage vault**
  - **Two vaults per unit to house fuel oil tanks**
  - **Three separate compartments per vault**
    - **two safety-related tanks**
    - **one non-safety tank**
  - **Roof slab slightly above grade**

Luminant

MNES

Chapter 8, Offsite Power System

A minimum of new transmission corridors will be required

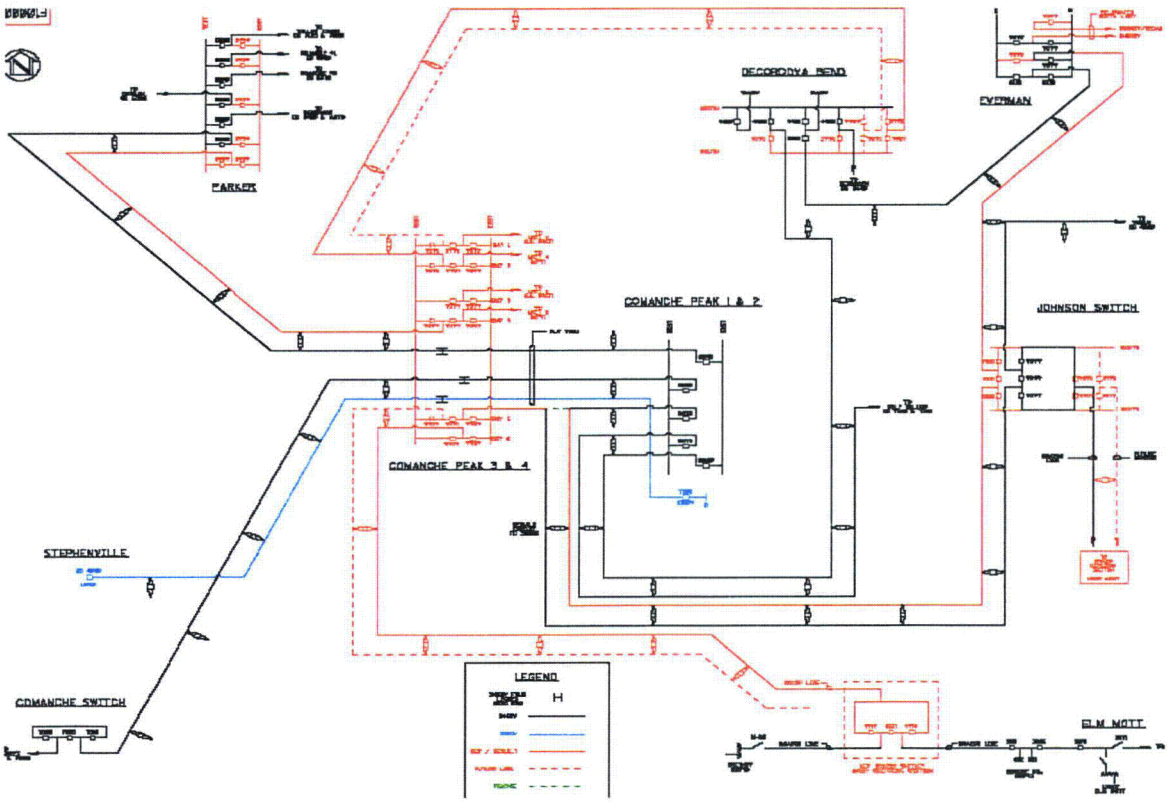

Luminant

MNES

Chapter 9, Plant-Specific Systems

- Ultimate heat sink
  - Four 50% capacity cooling towers, one per ESW train
  - Four 33.3% capacity basins
  - Eight Class IE cooling fans
  - Makeup from circulating water system
  - No sharing between Unit 3 and 4
- UHS pump house ventilation
  - Maintains proper environmental conditions for equipment

Luminant

MNES

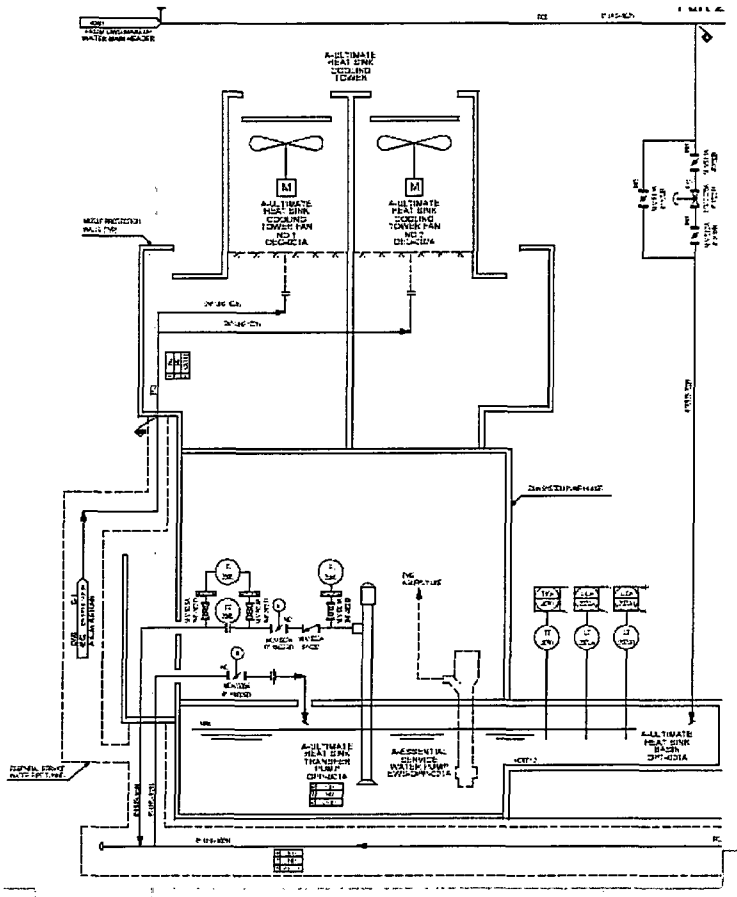

Luminant

MNES

Chapter 9 (Slide 3 of 3)

- Fire protection water supply system
  - Two 500,000-gal storage tanks
  - Each tank supports two hours of largest sprinkler operation plus hose stream allowances with excess capacity for normal operations
  - Eight-hour refill from water treatment system for one tank
- Sanitary water system
- Potable water system
- Bulk nitrogen system
- Communications systems

Luminant

MNES

Chapter 10, Steam and Power Conversion System

- Circulating water system / UHS makeup
  - Evaporation, drift, blowdown losses made up from Lake Granbury
  - Intake structure meets Clean Water Act Section 316(b)
  - Fine-mesh passive screens on submerged intakes
  - Two 50% capacity makeup pumps per unit
  - Common installed spare makeup pump
  - Reliable backup electric power source
  - Common jockey pump keeps makeup lines pressurized

Luminant

MNES

Chapter 10 (Slide 2 of 4)

- **Circulating water system blowdown**
  - **Gravity drain system to Lake Granbury**
  - **Two priming pumps per unit**
  - **Underwater discharge diffuser in Lake Granbury**
  - **Portion of blowdown may periodically require treatment**
    - Conventional pre-filtration, reverse osmosis technology with evaporation ponds
    - Comply with TCEQ/TPDES requirements

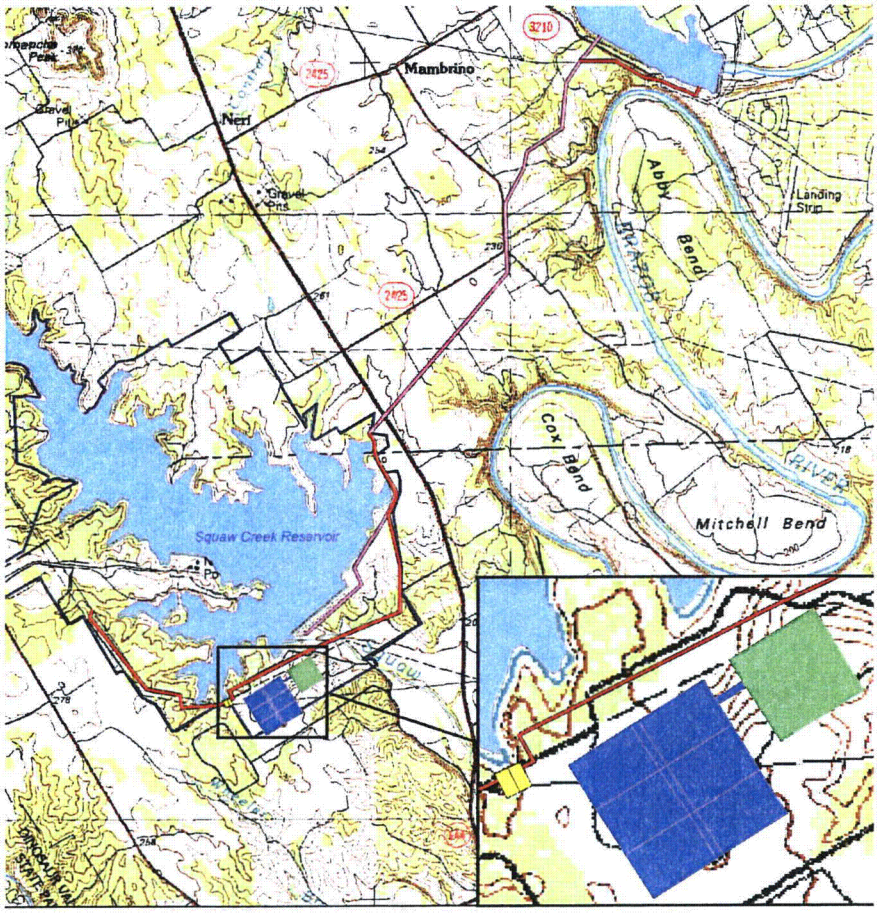

Luminant

MNES

Chapter 10 (Slide 4 of 4)

- Startup SGBDS
  - To avoid discharging out-of-spec water to condenser
  - Up to 3% maximum steaming rate blowdown fluid
  - Separated into flashing vapor/saturated liquid in flash tank
  - Cooled by startup SGBD HX
  - Discharged to waste pond

Luminant

MNES

Chapter 11, Radioactive Waste Management Systems

- Uses NEI 07-10 for process control program
- Uses NEI 07-09 for offsite dose calculation manual
- Radwaste systems
  - Offsite vendor provides laundry services
  - Common storage facility for 10 years of Class A, B, and C waste from all four units
  - Meets Texas volume reduction and waste disposal strategy
  - Spent resin de-watered by vendor-supplied mobile system
  - LWMS design allows for optional vendor skid

Luminant

MNES

Chapter 12, Radiation Protection

- Uses NEI 07-08 for ALARA program
- Uses NEI 07-03 for radiation protection program

Chapter 13, Conduct of Operations

- Uses NEI 06-13A for training program
- Uses NEI 06-06 for fitness for duty program

Chapter 14, Initial Plant Test Program

- Personnel monitors and radiation survey instruments
- UHS system
- UHS ESW pump house ventilation

Luminant

MNES

FSAR Standardization Matrix

Joe Tapia
Licensing Manager
MNES

Luminant

MNES

Standardization Matrix

Matrix shows "X.Y.Z" level information

COLA FSAR Section	US-APWR COLA Section	Incorporated by Reference (Match DCD)	Level of Standardization		
			Standard	Standard With Site-Specific	Site-Specific
FSAR Chapter X					
X.Y.1	Section Title	X			
X.Y.2	Section Title		X		
X.Y.3	Section Title			X	
X.Y.4	Section Title				X

Incorporated by Reference	Section Incorporates by Reference (IBRs) the corresponding section of the DCD with no supplemental information provided.
Standard	Section IBRs the corresponding section of the DCD with additional information provided that is expected to be identical for the R-COL application and future S-COL applications.
Standard w/Site-Specific	Section IBRs the corresponding section of the DCD with a combination of additional standard and site-specific information provided.
Site-Specific	Section IBRs the corresponding section of the DCD with additional information to describe site-specific features or information unique to the applicant.

Luminant

MNES

Standardization Matrix Summary

- Level of design standardization is ~90%
- No departures from DCD
- Matrix not part of COL application
- One-time use
- Useful tool for reviewers

Luminant

MNES

Quality Assurance

Ron Carver
QA Manager
Luminant

Luminant

MNES

Quality Assurance – FSAR Ch 17 and Part 11

- High Quality Project
  - Past
  - Present
  - Future
- Safety-conscious work environment (SAFETEAM)
  - Luminant NuBuild Team
  - Site boring crews
  - Primary contractors

Luminant

MNES

Past and Present – QA Project Plan

- **CPNPP 1 & 2 Approved QAP**
  - **10 CFR 50 Appendix B**
  - **ANSI N45.2**
  - **Approved Vendors List**
- **QA requirements flow down from Luminant through vendors and subvendors**
  - **MNES and MHI QAPDs approved by Luminant**
    - 10 CFR 50 Appendix B
    - NEI 06-14
    - ASME NQA-1-1994 (ANSI N45.2/App. B)
    - 10 CFR 21

Luminant

MNES

Future - Quality Assurance Program Description

- **NEI 06-14A**
  - NEI QA Task Force
  - Industry and project lessons learned
  - RAIs
  - NQA-1-2008
- **Transition to QAPD begins after COL and will be fully implemented at least 30 days prior to initial fuel load**

Luminant

MNES

Summary and Conclusions

Don Woodlan
Manager, Nuclear Regulatory Affairs
Luminant

Luminant

MNES

Today's Topics

- CPNPP COLA Project
- Site Description
- COLA Format, Style, and Content
- FSAR Standardization Matrix
- Quality Assurance

Luminant

MNES

Future Interactions and Public Meetings

- DCD/COLA schedule
- Emergent technical items
- Ongoing periodic conference calls
- QA audits
- Environmental audits
- ACRS presentations
- Environmental scoping meeting (January 2009)
- ASLB Public Sessions

Luminant

MNES

Emphasis – Facilitate the NRC Review

- Submit a complete, high quality COLA
- Conform with RGs/SRPs
- Meetings to keep NRC updated and obtain feedback
- Keep DCD and COLA aligned – minimize departures
- Support NRC review including timely and complete responses to RAIs

Luminant

MNES

Closing Remarks

Mitch Lucas
VP, Nuclear Engineering & Support
Luminant

Luminant

MNES

Closing Remarks

- Safety focus driven by high quality
- Environmental stewardship
- Community involvement
- Continuous improvement and learning organization
- ERCOT market growth and ERCOT reserve margin
- Strong team to meet Luminant business needs
- NuBuild communication with the NRC

Luminant

MNES

Questions and Comments