CIRCUIT ANALYSIS WORKSHEET

Example #1

Component ID: **AOV-1 (SOV-1)** Component Type: **AOV**

Component Description: **Power Operated Relief Valve**

BE Code: **AOV-1_TO** **(PORV AOV-1 TRANSFERS OPEN)**

Required Position: Functional State **CLOSED**

Normal Position: **CLOSED**

Failed Electrical Position: **CLOSED**

Failed Air Position: **CLOSED**

High Consequence Component Yes ☐ No ☒

Power Supplies: Vital-A Breaker: 3

Breaker:

Cable Analysis:

Cable ID	Required?	Function	Fault Consequence	Comments
VA3A	N	Power	LOP	
VA3B	Y	Control	SO-Open	Hot Short between conductors
				GDO and SVC can cause Valve To cycle open-shut repeatedly
VA3C	Y	Control	SO- Open	

Comments:

$\mathbb{P}(SO,B) = 0.60 + 0.06 - (0.6 \times .06) = 0.62$ $\mathbb{F}(SO,B) = 0.57 \times 0.42 = 0.24$

$\mathbb{P}(SO,C) = 0.60 + 0.06 - (.6 \times .06) = 0.62$ ← Table 2 $\mathbb{F}(SO,C) = 0.67 \times 0.63 = 0.42$

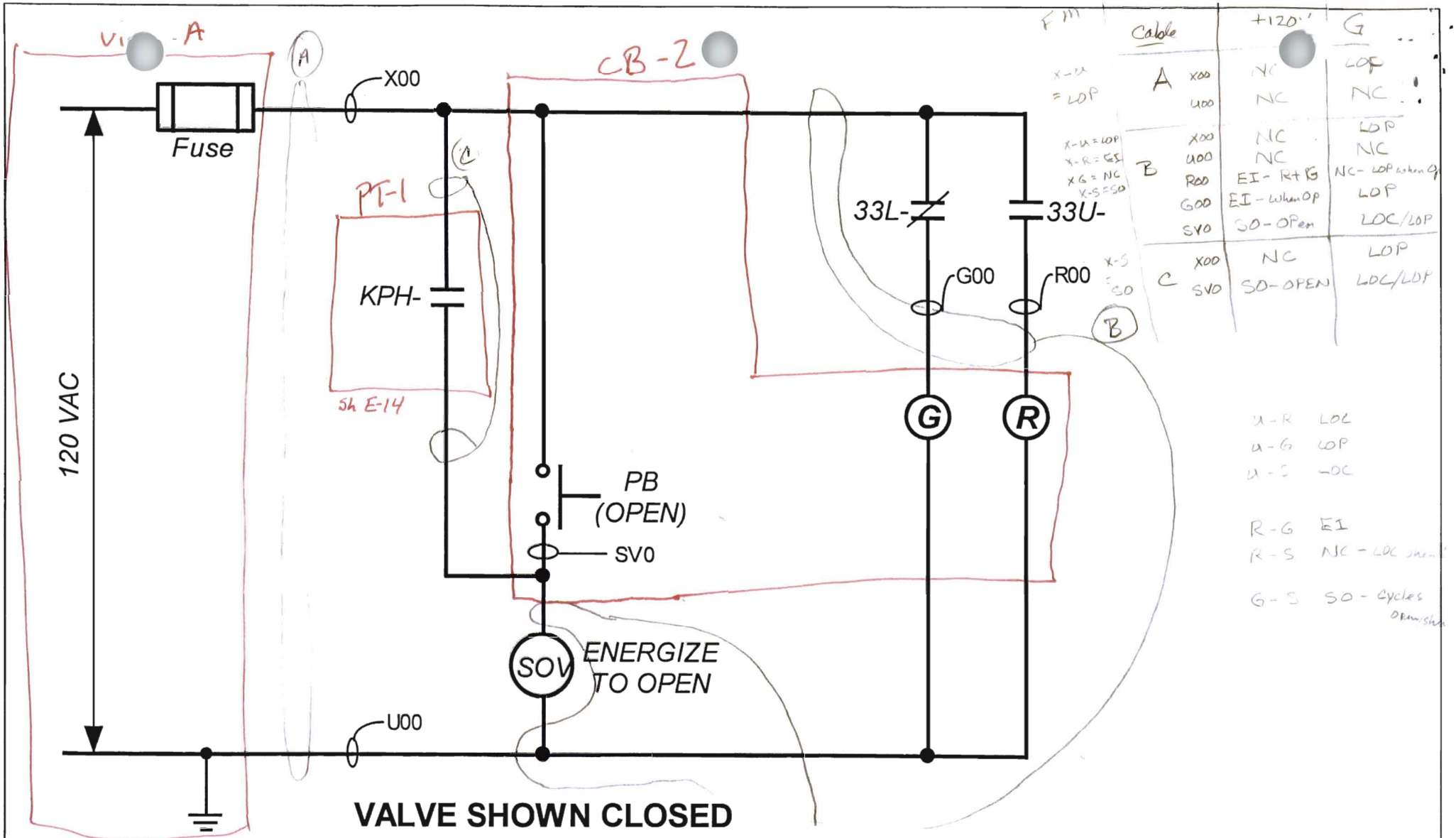

SCHEME VA3

SNPP

SCHEMATIC DIAGRAM – PRESSURE OPERATED RELIEF SOLENOID VALVE SOV-1

Drawing No.:	E-03
Date:	05/04/2007
Revision No.:	1

SNPP	TITLE: AOV-1 BLOCK DIAGRAM	DATE: 4/27/07

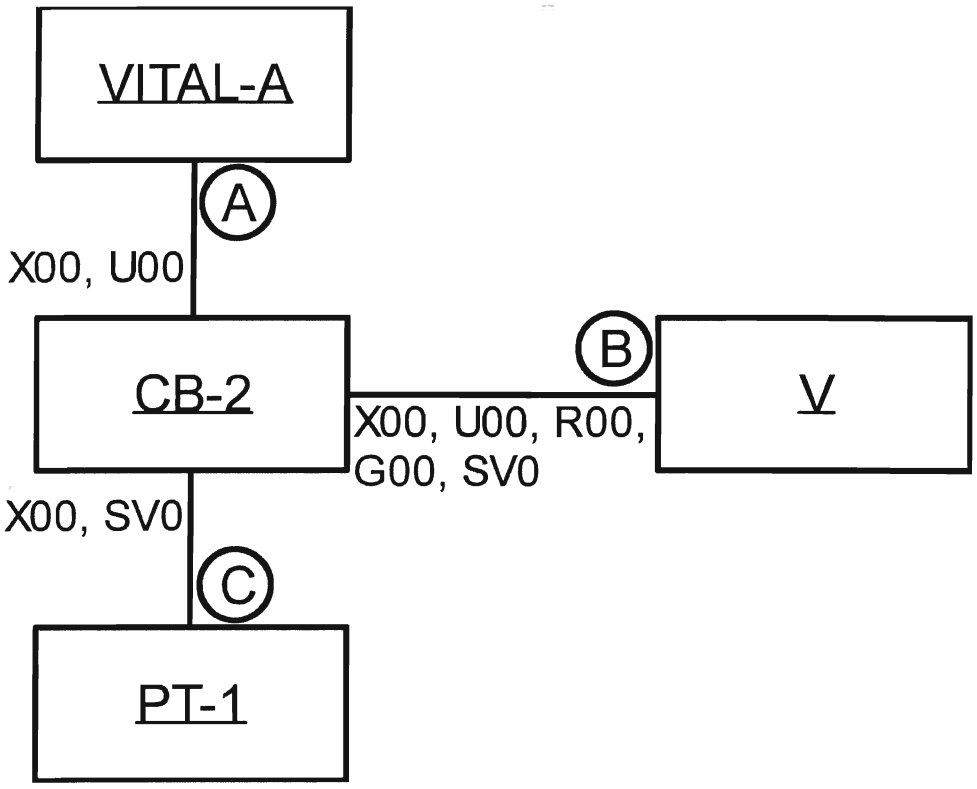

SOV-1 SCHEME VA3

CIRCUIT ANALYSIS WORKSHEET

Example #2

Component ID: **AOV-3 (SOV-3)** Component Type: **AOV**

Component Description: **Charging Pump Injection Valve**

BE Code: **AOV-3_FTC (AOV-3 FAILS TO CLOSE)**

Required Position: Functional State **CLOSED**

Normal Position: **OPEN**

Failed Electrical Position: **CLOSED**

Failed Air Position: **CLOSED**

High Consequence Component Yes ☐ No ☒

Power Supplies: Panel B Breaker: 3

Breaker:

Cable Analysis:

Cable ID	Required?	Function	Fault Consequence	Comments
PB3A	N	Power	LOP	
PB3B	Y	Control	SO-Open	Energize SVO (ALSO, EI, LOP, LOC)
PB3C	N	Control	LOP	

Comments: Table

$P_{(SO,B)} = 0.60 + 0.06 - (0.60 \times 0.06) = 0.62$

Formula

$P_{CL} = \frac{(7-1)}{(7-1)+(2\times1)} = \frac{6}{6+2} = \frac{6}{8} = 0.75$

$CF = \{1[3+\frac{0.5}{7}]\}/7 = \frac{3.07}{7} = 0.44$

$P_{(SO,B)} = 0.75 \times 0.44 = 0.33$

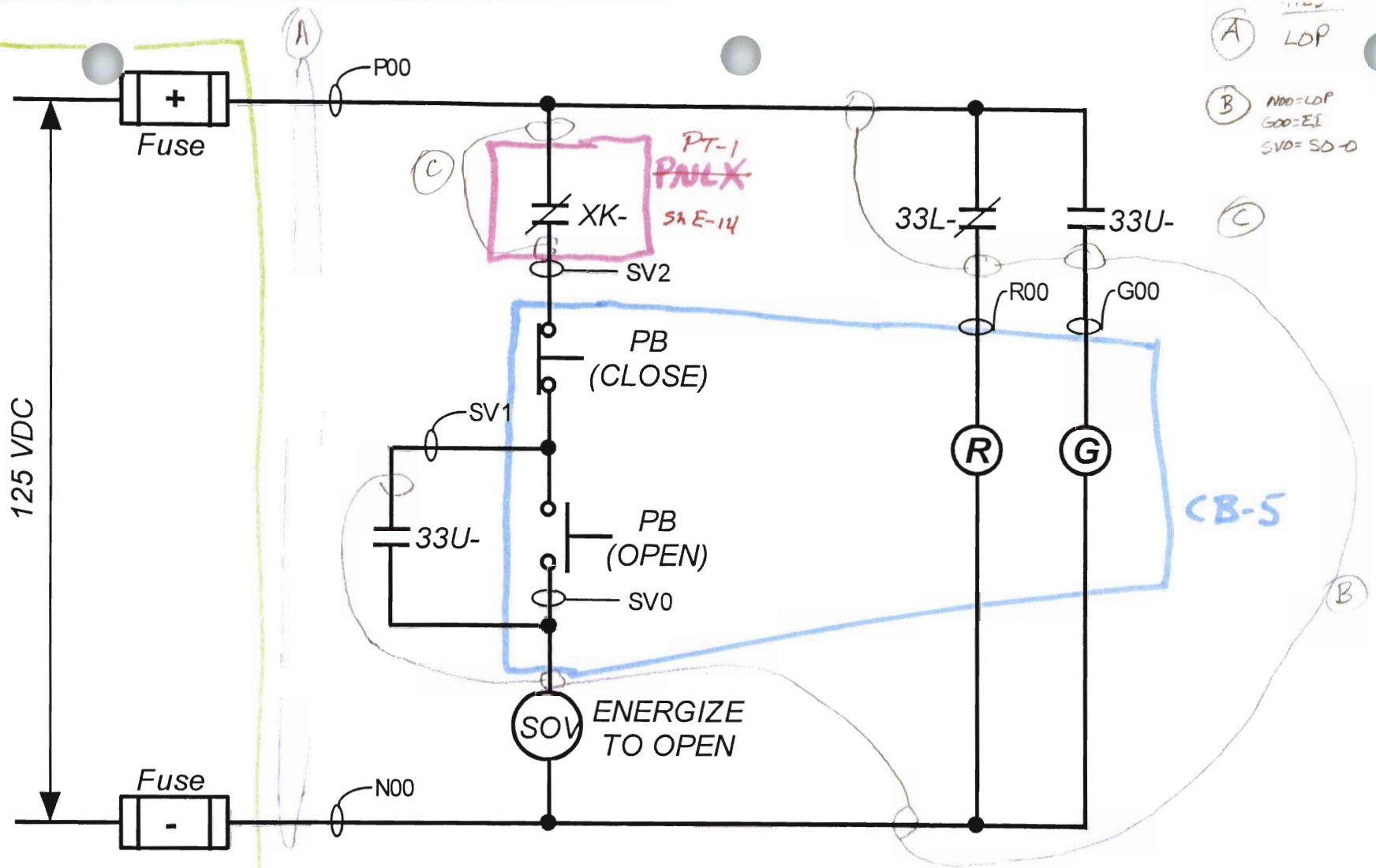

VALVE	DESCRIPTION	SCHEME	SWITCH ID
SOV-2	LETDOWN ISOLATION	PB2	AOV-2
SOV-3	CHARGING PUMP INJECTION	PB3	AOV-3

SNPP

SCHEMATIC DIAGRAM -- PRIMARY MAKEUP SYSTEM SOLENOID VALVES

SOV-2 & SOV-3

Drawing No.: E-02

Date: 5/4/07 ~~04/27/2007~~

Revision No.: 0

SNPP	TITLE: AOV-3 BLOCK DIAGRAM	DATE: 4/27/07

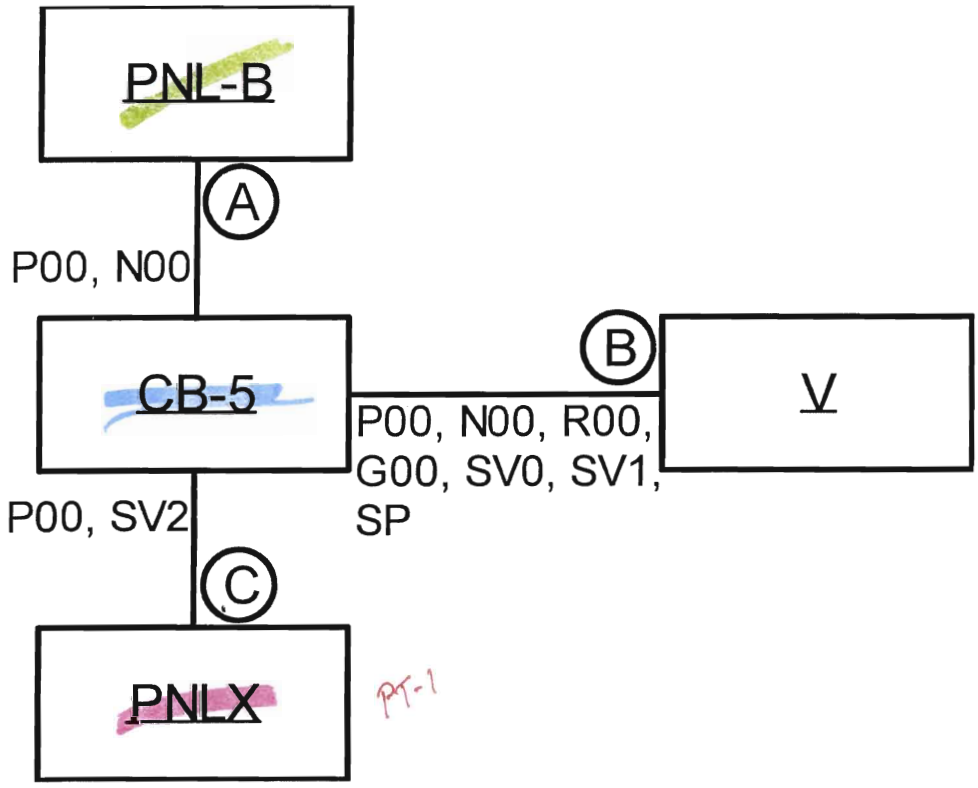

SOV-3, SCHEME PB3

CIRCUIT ANALYSIS WORKSHEET

Example #3

Component ID: **MOV-9** Component Type: **MOV**

Component Description: **High Pressure Injection Valve**

BE Code: **MOV-9_FTO** **(MOV-9 FAILS TO OPEN)**

Required Position: Functional State **OPEN**

Normal Position: **CLOSED**

Failed Electrical Position: **AS-IS**

Failed Air Position: **N/A**

High Consequence Component Yes ☐ No ☒

Power Supplies: MCC-B1 Breaker: #5

Breaker:

Cable Analysis:

Cable ID	Required?	Function	Fault Consequence	Comments
MB15A	Y	Control	EI, SO-C, SO-O, LOP LOC	9-C, 1 gnd, 1 target, 2 sources
MB15B	Y	Control	EI, LOP, LOC	
MB15P	Y	Power	LOP	

Comments:

$P_{Table\ 10-1} = 0.3 + .03 = 0.33$

$P_{Cable} = 0.727 * 0.228 = 0.17$

$P_{cc} = \frac{(9-1)}{(9-1)+(2\times1)+1} = 0.727$

$CF = 1 \times [2 + {}^{0.5}/_{9}]/9 = 0.228$

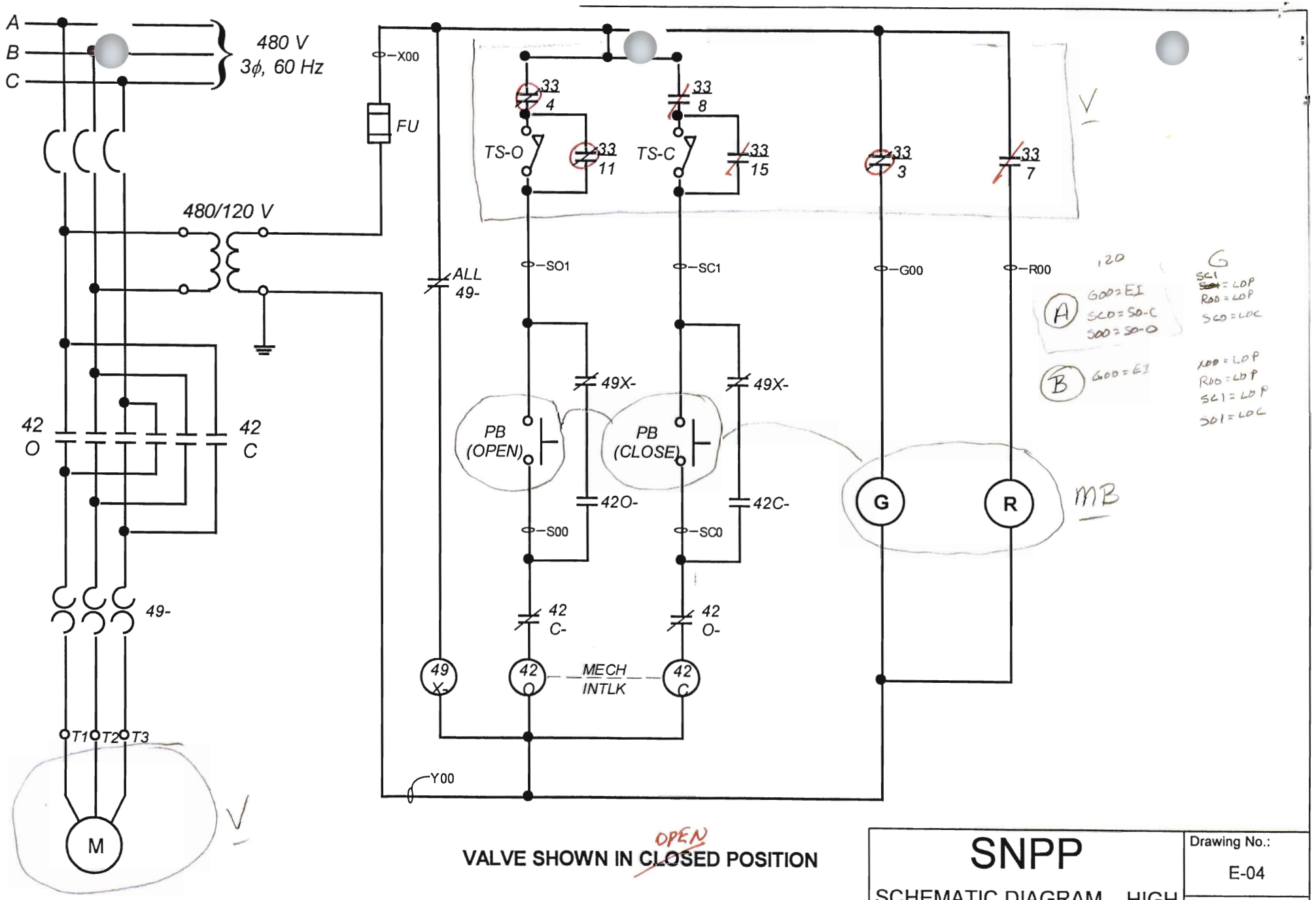

VALVE SHOWN IN ~~CLOSED~~ OPEN POSITION

VALVE	DESCRIPTION	SCHEME	SWITCH ID
MOV-1	HIGH PRESS INJECTION-A	MA12	MOV-1
MOV-9	HIGH PRESS INJECTION-B	MB15	MOV-9

SNPP

SCHEMATIC DIAGRAM – HIGH PRESSURE INJECTION MOTOR OPERATED VALVES MOV-1 & MOV-9

Drawing No.: E-04

Date: 05/01/2007

Revision No.: 0

SNPP	MOV BLOCK DIAGRAM - 1	5/4/07

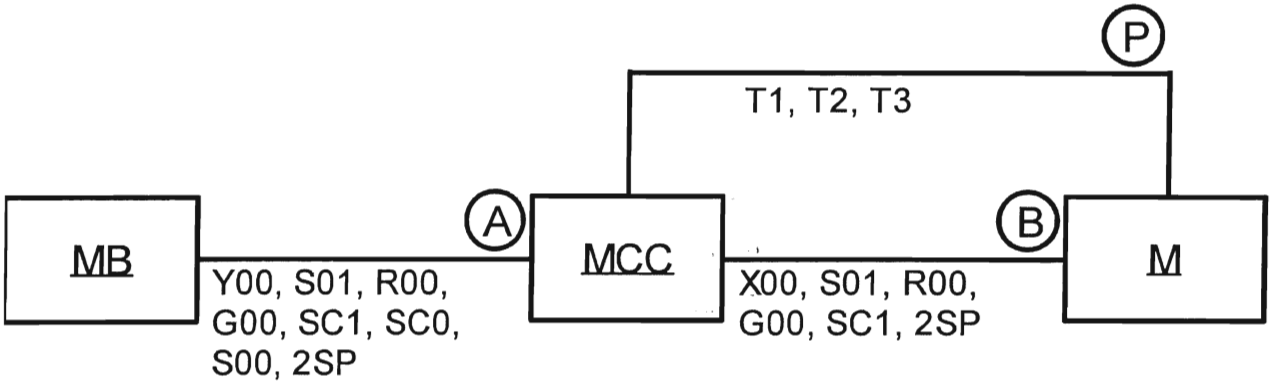

M	MCC	CUBICLE	MB	SCHEME
MOV-1	MCC-A1	2	CB-5	MA12
MOV-3	MCC-A1	3	CB-5	MA13
MOV-4	MCC-B1	2	CB-5	MB12
MOV-5	MCC-A1	4	CB-5	MA14
MOV-6	MCC-B1	3	CB-5	MB13
MOV-7	MCC-A1	5	CB-5	MA15
MOV-9	MCC-B1	5	CB-5	MB15
MOV-16	MCC-A1	8	CB-3	MA18
MOV-17	MCC-B1	6	CB-3	MB16

CIRCUIT ANALYSIS WORKSHEET

Example #4

Component ID: **MOV-15** Component Type: **MOV**

Component Description: **AFW Steam Inlet Throttle Valve**

BE Code: **MOV-10_FTO** **(MOV-10 FAILS TO OPEN)**

Required Position: Functional State **THROTTLED**

Normal Position: **CLOSED**

Failed Electrical Position: **AS-IS**

Failed Air Position: **N/A**

High Consequence Component Yes ☐ No ☒

Power Supplies: ~~DB~~ DC Bus-B Breaker: 4

Breaker:

Cable Analysis:

Cable ID	Required?	Function	Fault Consequence	Comments
DB4A	Y	Control	LOP	SO possible only with dual hot shorts POI - FO3 AND NOI - FO2 (FO2) (FO3)
DB4B	Y	Control	LOP	

Comments: Table

$\mathbb{E}_{(SO)} = 0.60 + 0.00 - (0.60 \times 0.00) = 0.60$ $P_{cc} = \frac{5-0}{(5-0)+0} = 1$

$CF_1 = \left(1 \times \left(1 + \frac{0.5}{5}\right)\right)^{.5} = .22$ $CF_2 = (1 \times (1 + \frac{0.5}{3}))^{1/3} = 0.29$

$\mathbb{E}_{(LO)} = P_{cc} \times CF_1 \times CF_2 = 1 \times .22 \times .29 = 0.09$

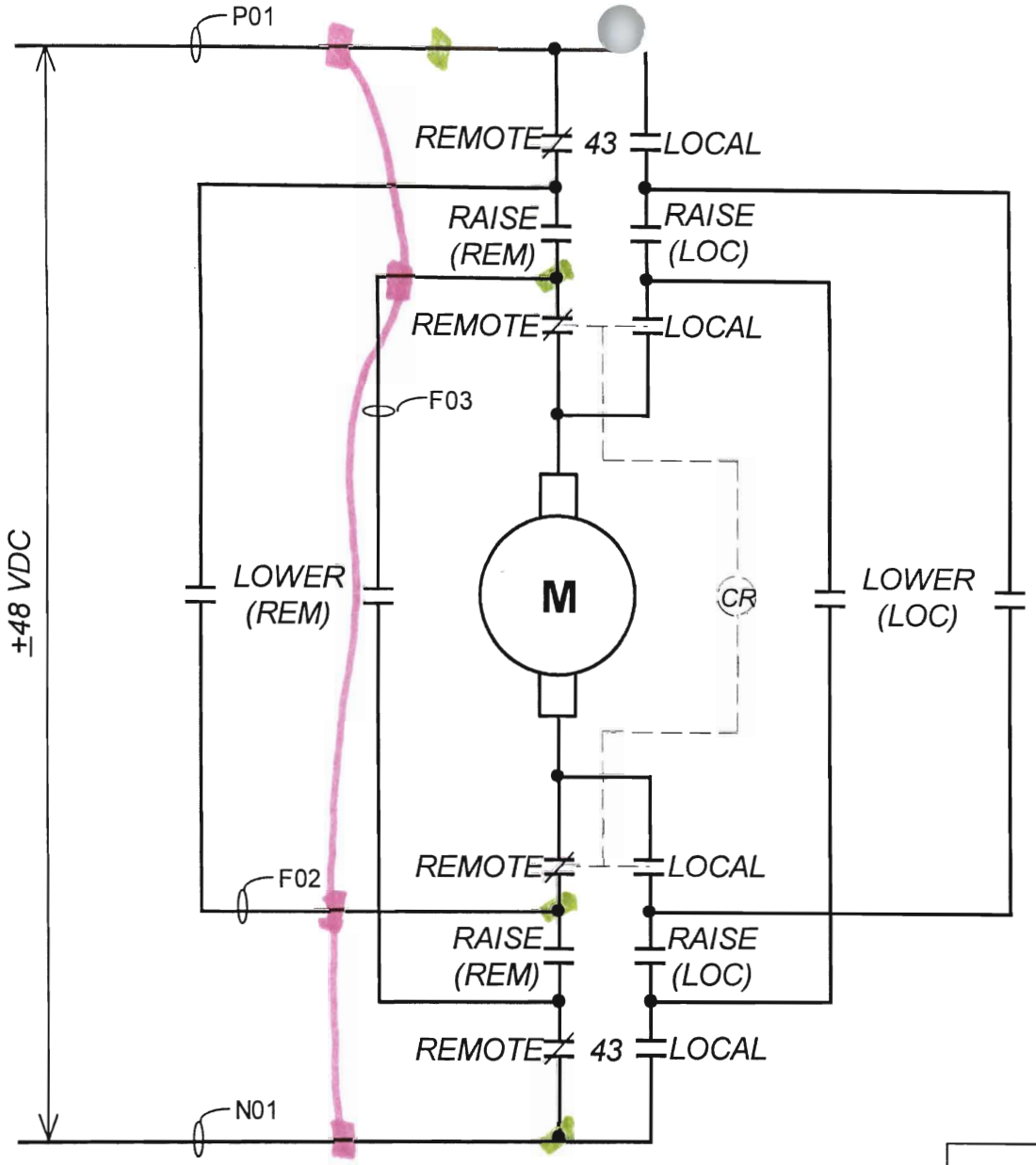

A

N01 = LOP

P01 = LOP

P01 - F03 and N01 - F02 → SO-Raise

P01 - F02 and N01 - F03 → SO-Lower

B

N01 = LOP

P01 = LOP

Motor Shown in Remote Operating Mode

MOV-15, SCHEME DB4

SNPP

SCHEMATIC DIAGRAM – AFW- B STEAM THROTTLE MOTOR OPERATED VALVE MOV-15

Drawing No.:	E-09
Date:	05/01/2007
Revision No.:	0

SNPP	MOV BLOCK DIAGRAM - 2	5/1/07

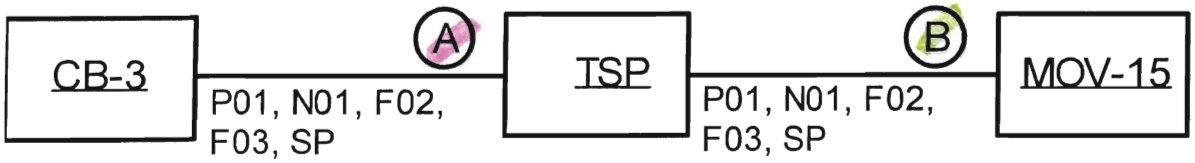

MOV-15, SCHEME DB4

CIRCUIT ANALYSIS WORKSHEET

Example #5

Component ID: **MOV-13** Component Type: **MOV**

Component Description: **PORV Block Valve**

BE Code: **MOV-13_FTC** **(MOV-13 FAILS TO CLOSE)**

Required Position: Functional State **OPEN / CLOSED**

Normal Position: **OPEN**

Failed Electrical Position: **AS-IS**

Failed Air Position: **N/A**

High Consequence Component Yes ☐ No ☒

Power Supplies: MCC-A1 Breaker: 7

Breaker:

Cable Analysis:

Cable ID	Required?	Function	Fault Consequence	Comments
MA17 A	Y	Control	~~[illegible]~~ LOP, LOC	
MA17 B	Y	Control	SO-C, LOP, LOC	
MA17 C	Y	Control	SO-C, EI, LOC	
MA17 D	~~Y~~ N	Control		RSP
MA17 E	Y	Control	EI, LOP	
MA17 P	Y	Power	LOP	

Comments:

Table for both B & C: $\mathbb{P}_{(SO)} = 0.30 + 0.03 - (.3 \times .03) = 0.32$

B: $P_{cc} = \frac{(9-1)}{(9-1)+(2\times1)} = \frac{8}{10} = 0.8$ $CF = \{1[1 - 15/9]\}/9 = 0.12$ (yes = Source) $\mathbb{P}_{(SO)} = 0.8 \times 0.12 = 0.10$

C: $P_{cc} = \frac{(9-3)}{(9-3)+(2\times3)} = \frac{6}{12} = 0.5$ $CF = \{1[3 + 15/9]\}/9 = 0.34$ $\mathbb{P}_{(SO)} = 0.5 \times 0.34 = 0.17$

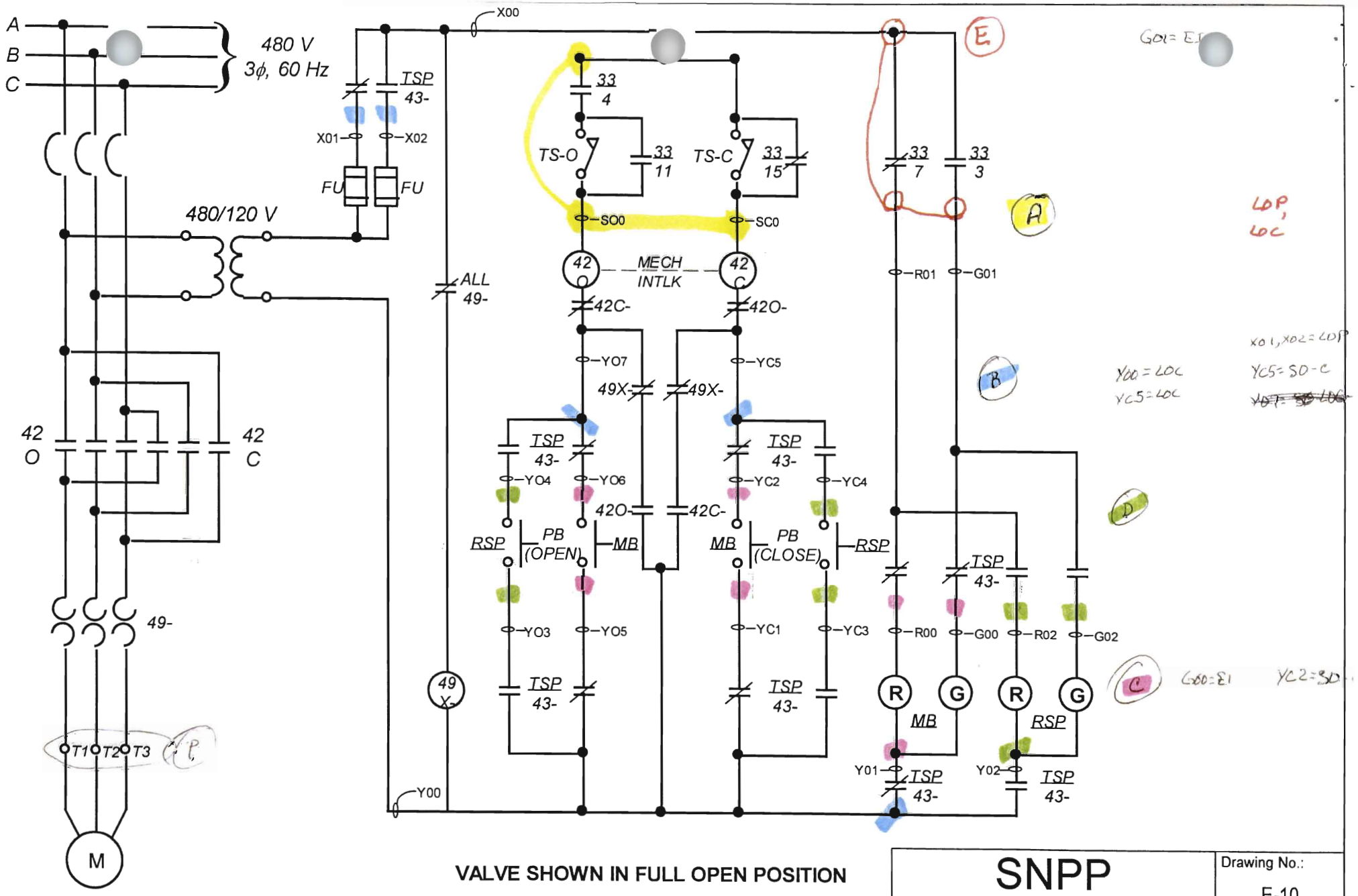

VALVE SHOWN IN FULL OPEN POSITION

MOV-13, SCHEME MA17

SNPP SCHEMATIC DIAGRAM – PORV BLOCK MOTOR OPERATED VALVE MOV-13	Drawing No.: E-10 Date: 05/01/2007 Revision No.: 0

SNPP	MOV BLOCK DIAGRAM - 3	5/1/07

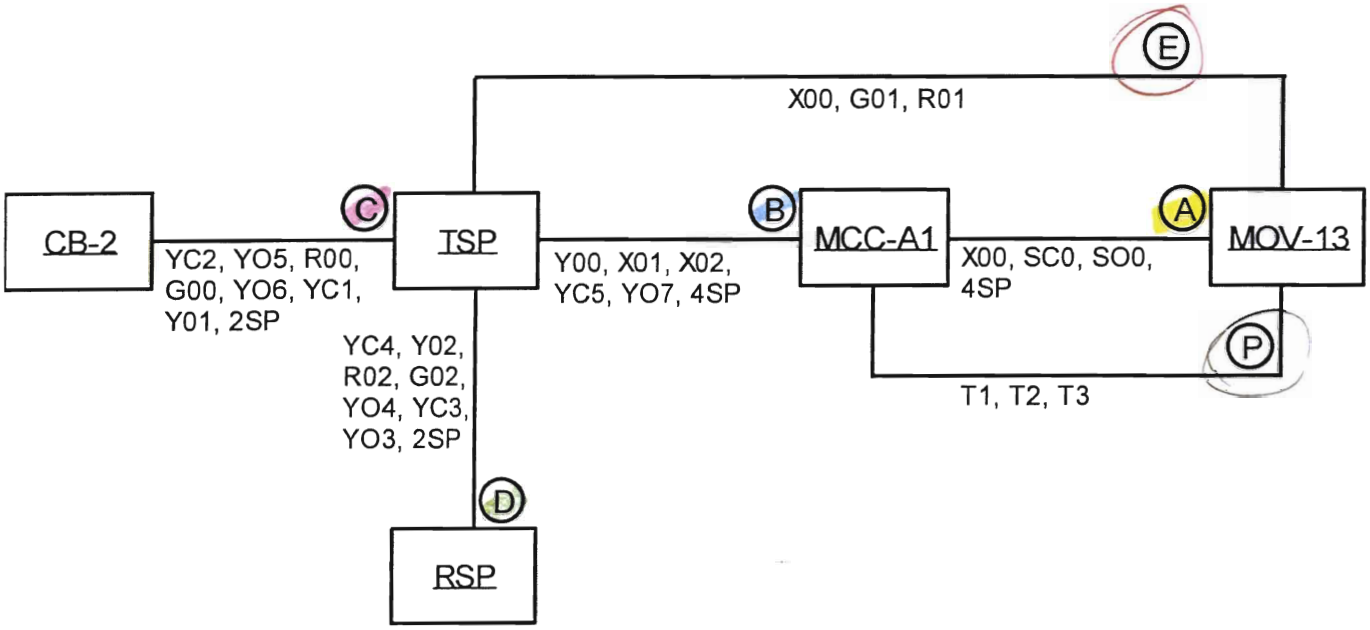

MOV-13, SCHEME MA17

CIRCUIT ANALYSIS WORKSHEET

Example #6

Component ID: **MOV-10** Component Type: **MOV**

Component Description: **AFW Discharge Isolation Valve**

BE Code: **MOV-10_FTO** **(MOV-10 FAILS TO OPEN)**

Required Position: Functional State **OPEN**

Normal Position: **CLOSED**

Failed Electrical Position: **AS-IS**

Failed Air Position: **N/A**

High Consequence Component Yes ☐ No ☒

Power Supplies: MCC-A1 Breaker: 6

Breaker:

Cable Analysis:

Cable ID	Required?	Function	Fault Consequence	Comments
MA16A	Y	Control	SO-Close	
* MA16B	Y	Control	SO-Close	3-C, 0 gnd, 1 target, 1 source
MA16C	Y	Control	SO-Close	RSP
MA16D	Y	Control	SO-Close, LOC-OPEN	
MA16E	Y	Control	SO-Close, LOC-OPEN	
MA16P	Y	Power	LOP	

Comments: Note - MOV-10 is ungrounded control circuit

$\bar{P}_{table} = 0.3 + 0.03 = 0.33$

$P_{cc} = \frac{(3-0)}{(3-0)+(2\times 0)} = 1.0$

$\bar{P}_{calc} = 1.0 * 0.39 = 0.39$

$CF = 1 \times [1 + {}^{5}/_{3}]/3 = 0.39$

Note: only cables B and E have energized conductors

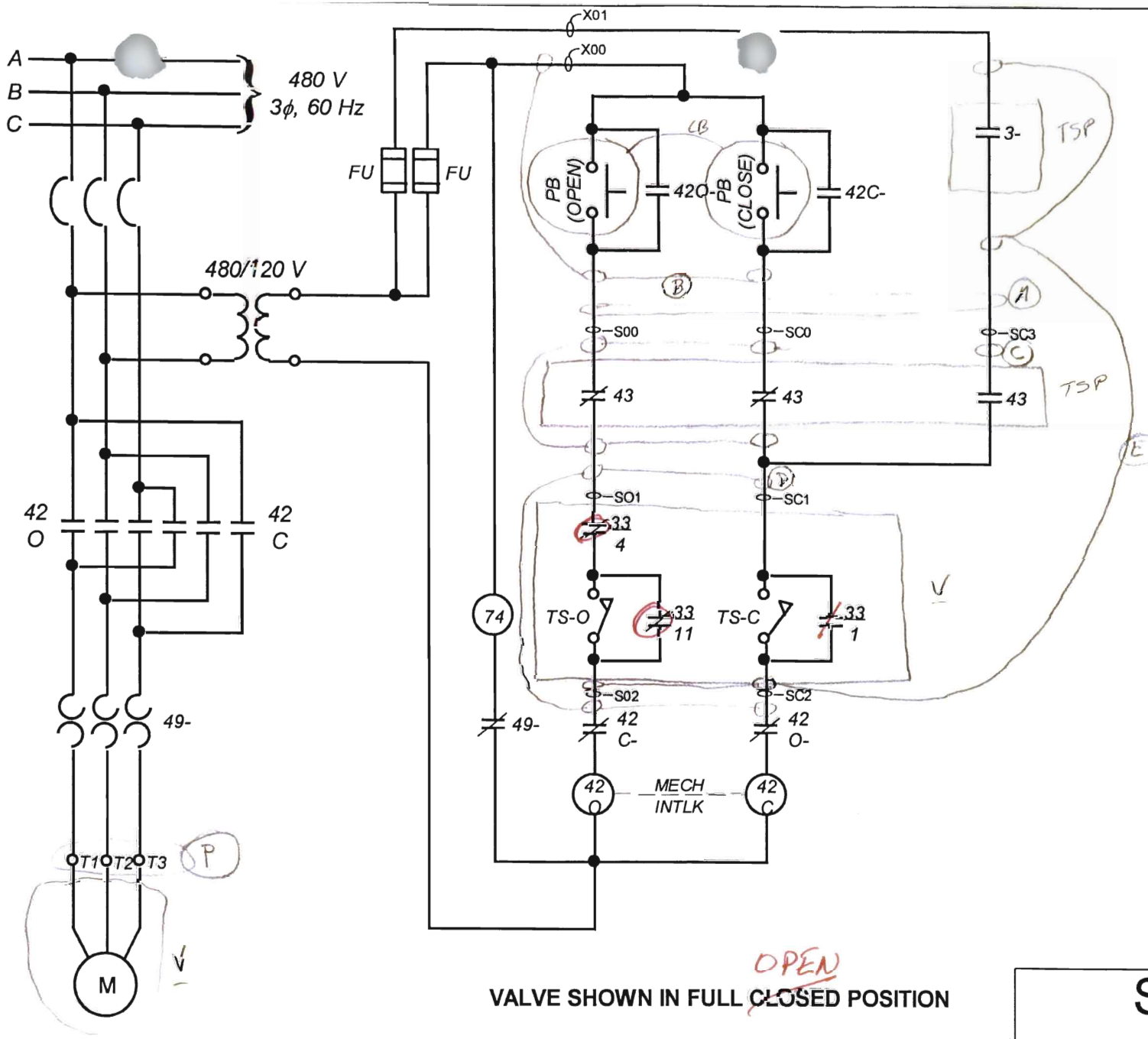

VALVE SHOWN IN FULL ~~CLOSED~~ OPEN POSITION

MOV-10, SCHEME MA16

SNPP

SCHEMATIC DIAGRAM – AFW-A DISCHARGE MOTOR OPERATED VALVE MOV-10

Drawing No.:	E-11
Date:	05/04/2007
Revision No.:	0

SNPP	MOV BLOCK DIAGRAM - 4	5/4/07

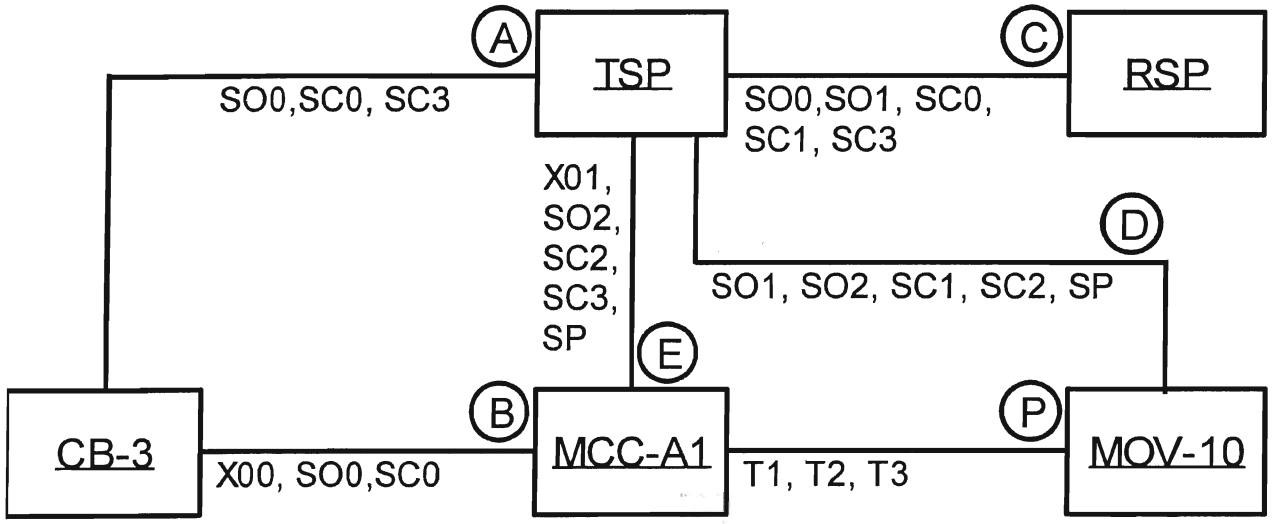

MOV-10, SCHEME MA16

CIRCUIT ANALYSIS WORKSHEET

Example #7

Component ID: **MOV-8** Component Type: **MOV**

Component Description: **RHR Outboard Suction Valve**

BE Code: **MOV-8_TO** **(MOV-8 TRANSFERS OPEN)**

Required Position: Functional State **CLOSED**

Normal Position: **CLOSED**

Failed Electrical Position: **AS-IS**

Failed Air Position: **N/A**

High Consequence Component Yes ☒ No ☐

Power Supplies: MCC-B1 Breaker: 4

Breaker:

Cable Analysis:

Cable ID	Required?	Function	Fault Consequence	Comments
MB14A	Y	Control	SO-OPEN	Energize SOO (Also, EI, LOC, LOP)
MB14B	N	Control	EI, LOC, LOP	
MB14C	Y	Control	SO-42	Energize LOO (Also, EI, LOC)
MB14P	Y	Power	SO-OPEN	3Ø "SMART SHORT"

Comments:

$\Pi_{(SO,A)} = 0.3 + 0.02$ (Table) $= 0.32$

$P_{cc} = \frac{(9-1)}{(9-1)+(2\times1)+1} = \frac{8}{11} = 0.73$ $CF = \{1\times[1+\frac{5}{4}]^2\}/9 = 0.12$

$\Pi_{(SO,A)} = 0.73 \times 0.12 = 0.09$

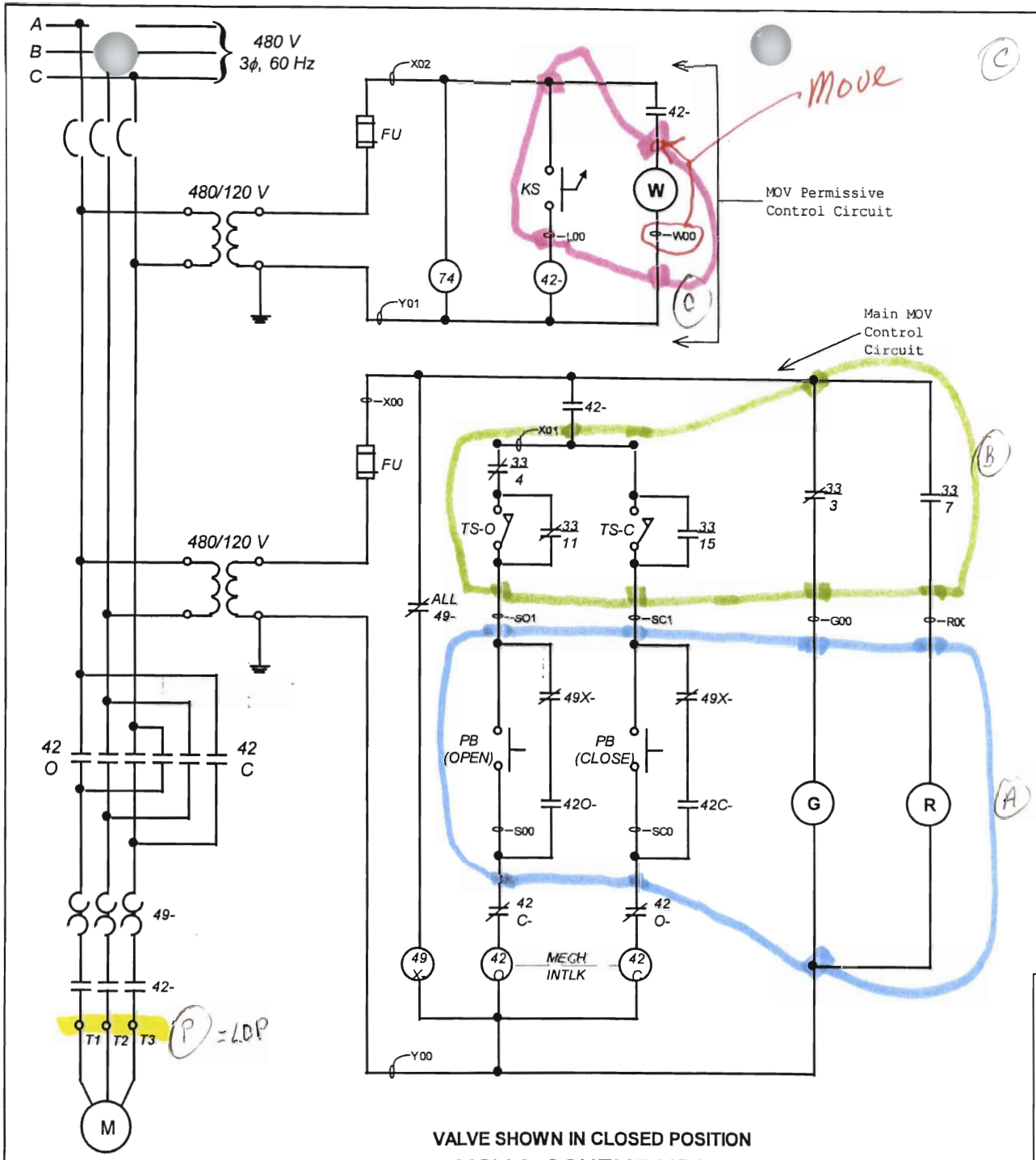

VALVE SHOWN IN CLOSED POSITION

MOV-8, SCHEME MB14

SNPP

SCHEMATIC DIAGRAM – RHR OUTBOARD SUCTION MOTOR OPERATED VALVE MOV-8

Drawing No.:	E-12
Date:	05/04/2007
Revision No.:	0

SNPP	TITLE: MOV BLOCK DIAGRAM - 5	DATE: 5/4/07

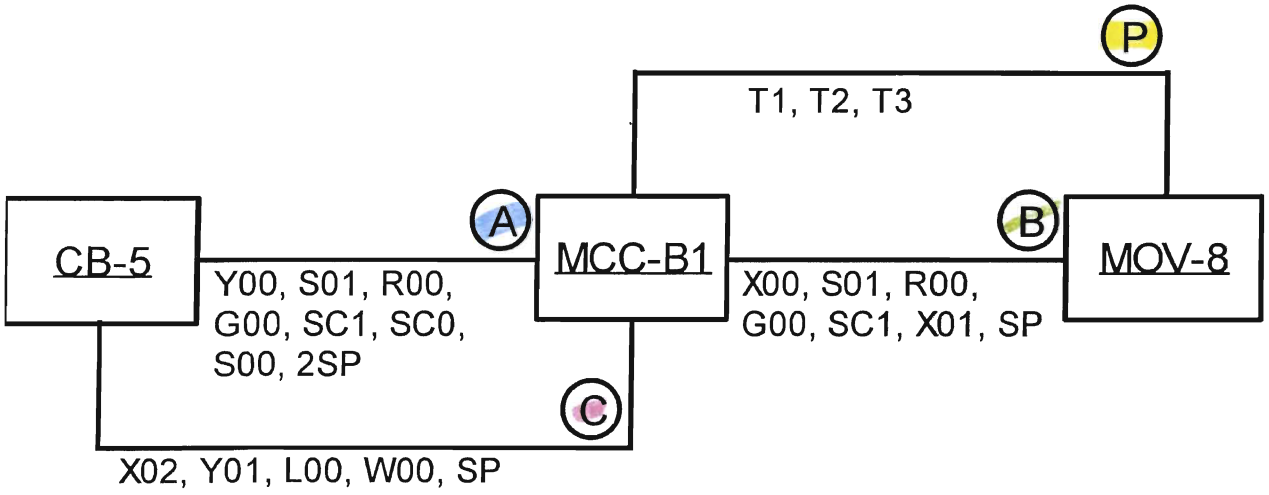

MOV-8, SCHEME MB14

CIRCUIT ANALYSIS WORKSHEET

Example #8

Component ID: **MOV-11** Component Type: **MOV**

Component Description: **AFW Discharge Isolation Valve**

BE Code: **MOV-11_FTO** **(MOV-11 FAILS TO OPEN)**

Required Position: Functional State **OPEN**

Normal Position: **CLOSED**

Failed Electrical Position: **AS-IS**

Failed Air Position: **N/A**

High Consequence Component Yes ☐ No ☒

Power Supplies: DC Bus-B Breaker: 3

Breaker:

Cable Analysis:

Cable ID	Required?	Function	Fault Consequence	Comments
DB3A	Y	Control	SO-C, EI, LOC, LOP	YC1
DB3B	Y	Control	LOP	
DB3C	Y	Control	EI, LOP	
DB3P	Y	Power	LOC, LOP	

Comments:

Table

$\Pi_{(SO,A)} = 0.60 + 0.06 - (0.6 \times 0.06) = 0.62$

$P_{CC} = \frac{7-1}{(7-1)+(2\times1)} = \frac{6}{8} = 0.75$ $CF = \{1\ [2 + \frac{5}{7}]\}/7 = 0.20$

$\Pi_{(SO,A)} = 0.75 * 0.20 = 0.23$

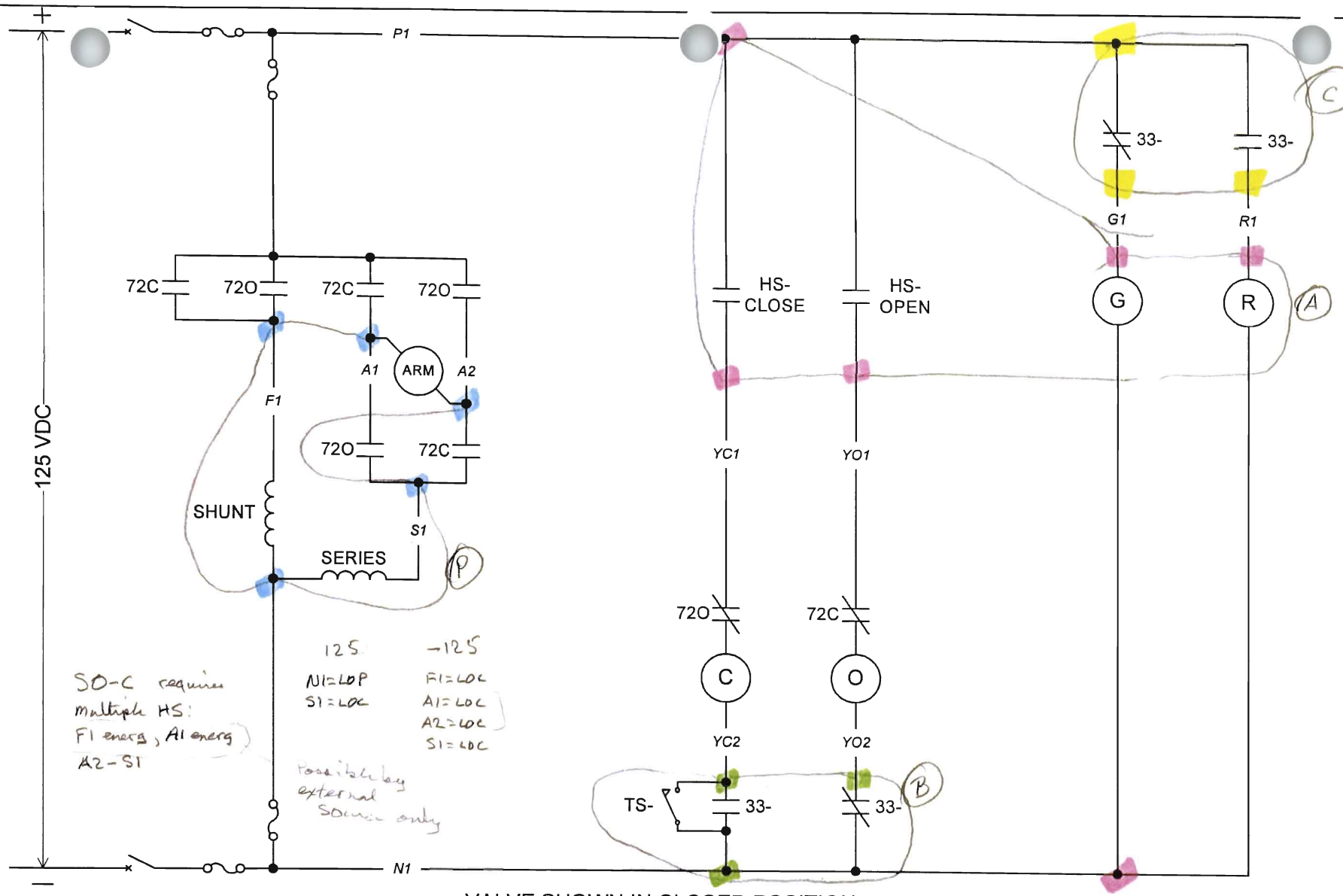

VALVE SHOWN IN CLOSED POSITION

MOV-11, SCHEME DB3

SNPP

SCHEMATIC DIAGRAM – AFW-B DISCHARGE MOTOR OPERATED VALVE MOV-11

Drawing No.:	E-13
Date:	05/09/2007
Revision No.:	0

SNPP	TITLE: MOV BLOCK DIAGRAM - 6	DATE: 5/9/07

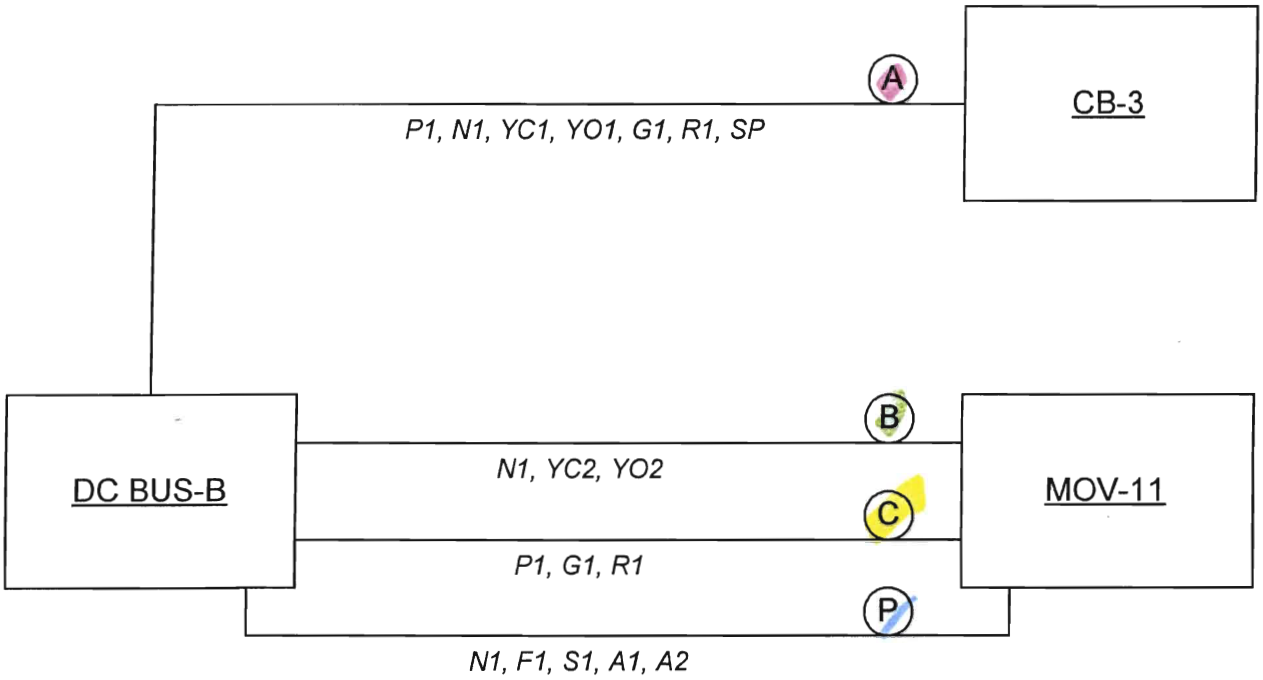

MOV-11, SCHEME DB3

CIRCUIT ANALYSIS WORKSHEET

Example #9

Component ID: **MOV-16** Component Type: **MOV**

Component Description: **AFW Test Line Isolation Valve**

BE Code: **MOV-16_TO** **(MOV-16 TRANSFERS OPEN)**

Required Position: Functional State **CLOSED**

Normal Position: **CLOSED**

Failed Electrical Position: **AS-IS**

Failed Air Position: **N/A**

High Consequence Component Yes ☐ No ☒

Power Supplies: MCC-A1 Breaker: 8

Breaker:

Cable Analysis:

Cable ID	Required?	Function	Fault Consequence	Comments
MA18A	Y	Control	SO-Open	Energize SOO (Also EI, LOP, LOC
MA18B	N	Control	EI, LOP	
MA18P	N	Power	LOP	

Comments:

$\mathbb{P}_{(SO,A)} = 0.30 + 0.03 = 0.33$

$P_{cc} = \frac{9-1}{(9-1)+(2\times1)+1} = \frac{8}{11} = 0.73$ $CF = \{1[2+5/9]\}/9 = 0.23$

$\mathbb{P}_{(SO,A)} = 0.73 \times 0.23 = 0.17$

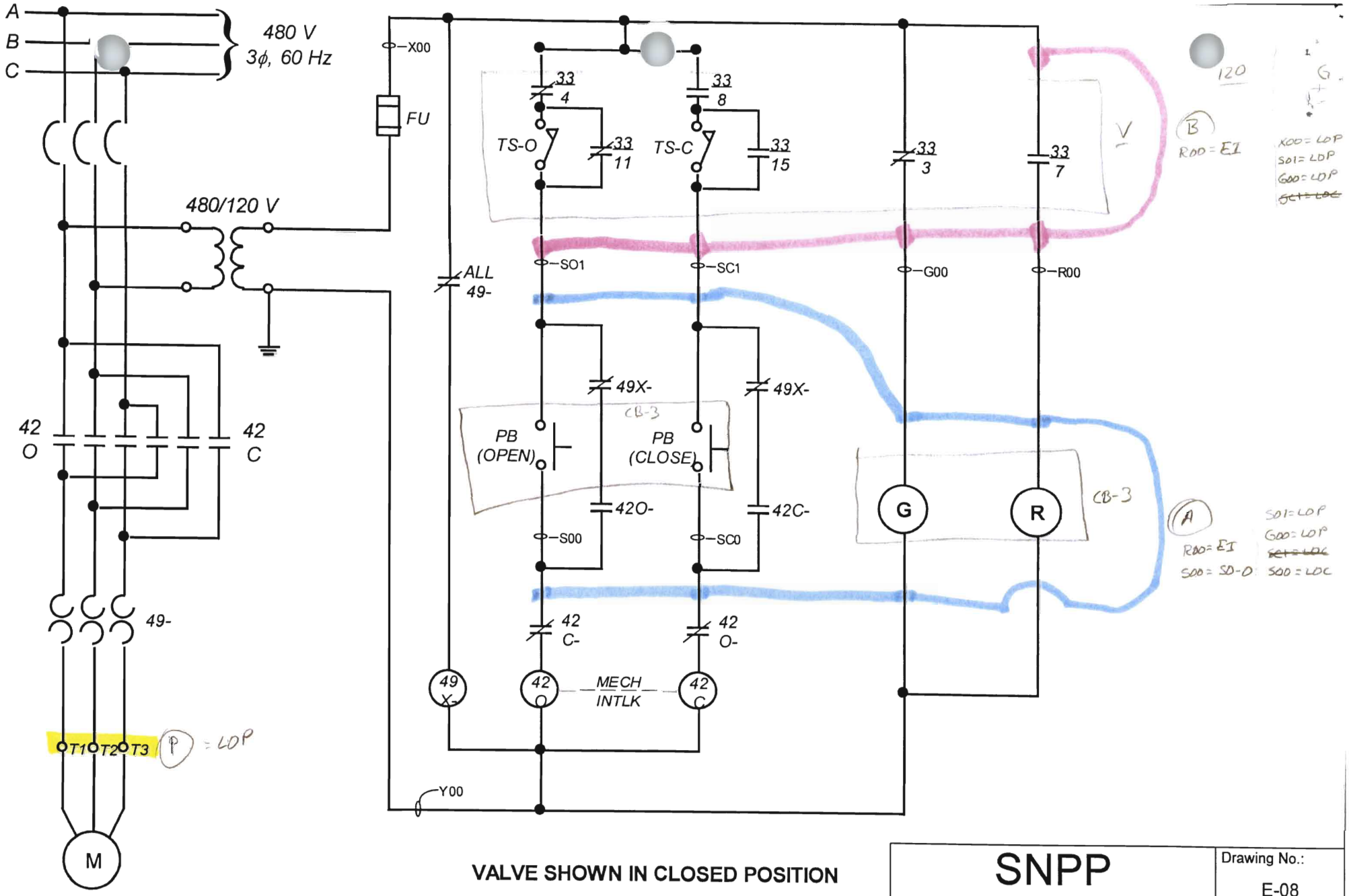

VALVE SHOWN IN CLOSED POSITION

VALVE	DESCRIPTION	SCHEME	SWITCH ID
MOV-16	AFW TEST LINE ISOLATION	MA18	MOV-16
MOV-17	AFW TEST LINE ISOLATION	MB16	MOV-17

SNPP

SCHEMATIC DIAGRAM – AFW TEST LINE ISOLATION MOTOR OPERATED VALVES MOV-16 & MOV-17

Drawing No.:	E-08
Date:	05/01/2007
Revision No.:	0

SNPP	MOV BLOCK DIAGRAM - 1	5/4/07

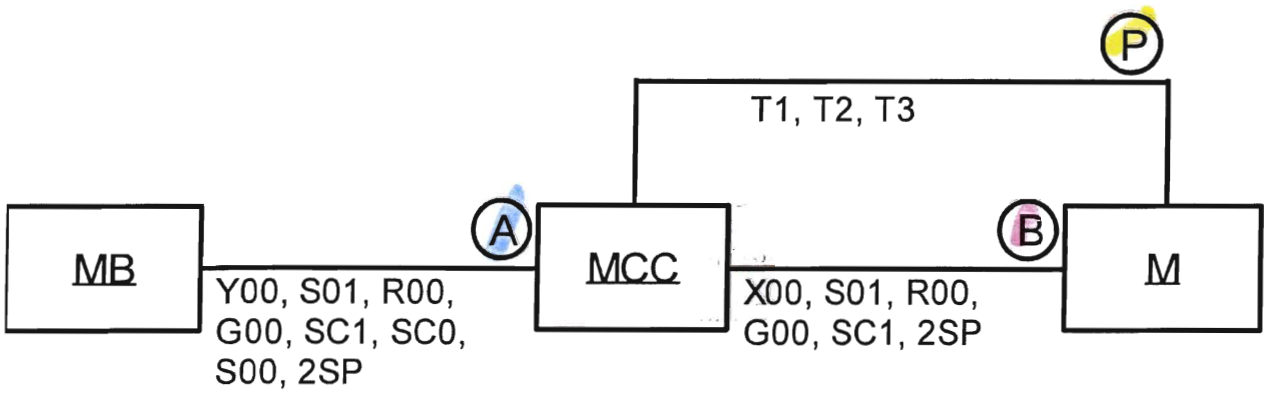

M	MCC	CUBICLE	MB	SCHEME
MOV-1	MCC-A1	2	CB-5	MA12
MOV-3	MCC-A1	3	CB-5	MA13
MOV-4	MCC-B1	2	CB-5	MB12
MOV-5	MCC-A1	4	CB-5	MA14
MOV-6	MCC-B1	3	CB-5	MB13
MOV-7	MCC-A1	5	CB-5	MA15
MOV-9	MCC-B1	5	CB-5	MB15
MOV-16	MCC-A1	8	CB-3	MA18
MOV-17	MCC-B1	6	CB-3	MB16

Example 10

CIRCUIT ANALYSIS WORKSHEET

Component ID: **PI-1** Component Type: **Instrument**

Component Description: RCS Pressure

BE Code: **PI-1_FL** **(RCS Pressure Indication Fails High)**

Required Position: Functional State **AVAILABLE**

Normal Position: **AVAILABLE**

Failed Electrical Position: ~~HIGH~~ LOW

Failed Air Position: **N/A**

High Consequence Component Yes ☐ No ☒

Power Supplies: VITAL-B Breaker: 8

Breaker:

Cable Analysis:

Cable ID	Required?	Function	Fault Consequence	Comments
VB1A	Y	I	FH, ERROR-H	
VB1B	Y	I	FH, ERROR-H	
VB1C	Y	I	FL, ERROR-L	
VB1D	Y	I	FL, ERROR-L	
VB1E	Y	I	FL, ERROR-L	
VB1F	Y	I	FL, ERROR-L	
VB1G	Y	I	FL, ERROR-L	
VA3C	N	I	NONE	CANNOT AFFECT INDICATION

Comments:

① SHIELDED INSTRUMENT CABLE - EXTERNAL HOT SHORTS NOT CONSIDERED CREDIBLE.

CIRCUIT ANALYSIS WORKSHEET

Component ID: PI-1 Continuation Sheet (2 of 2)

Cable Analysis:

Cable ID	Required?	Function	Fault Consequence	Comments
PB2C	N	I	NONE	CANNOT AFFECT INDICATION
PB3C	N	I	NONE	CANNOT AFFECT INDICATION

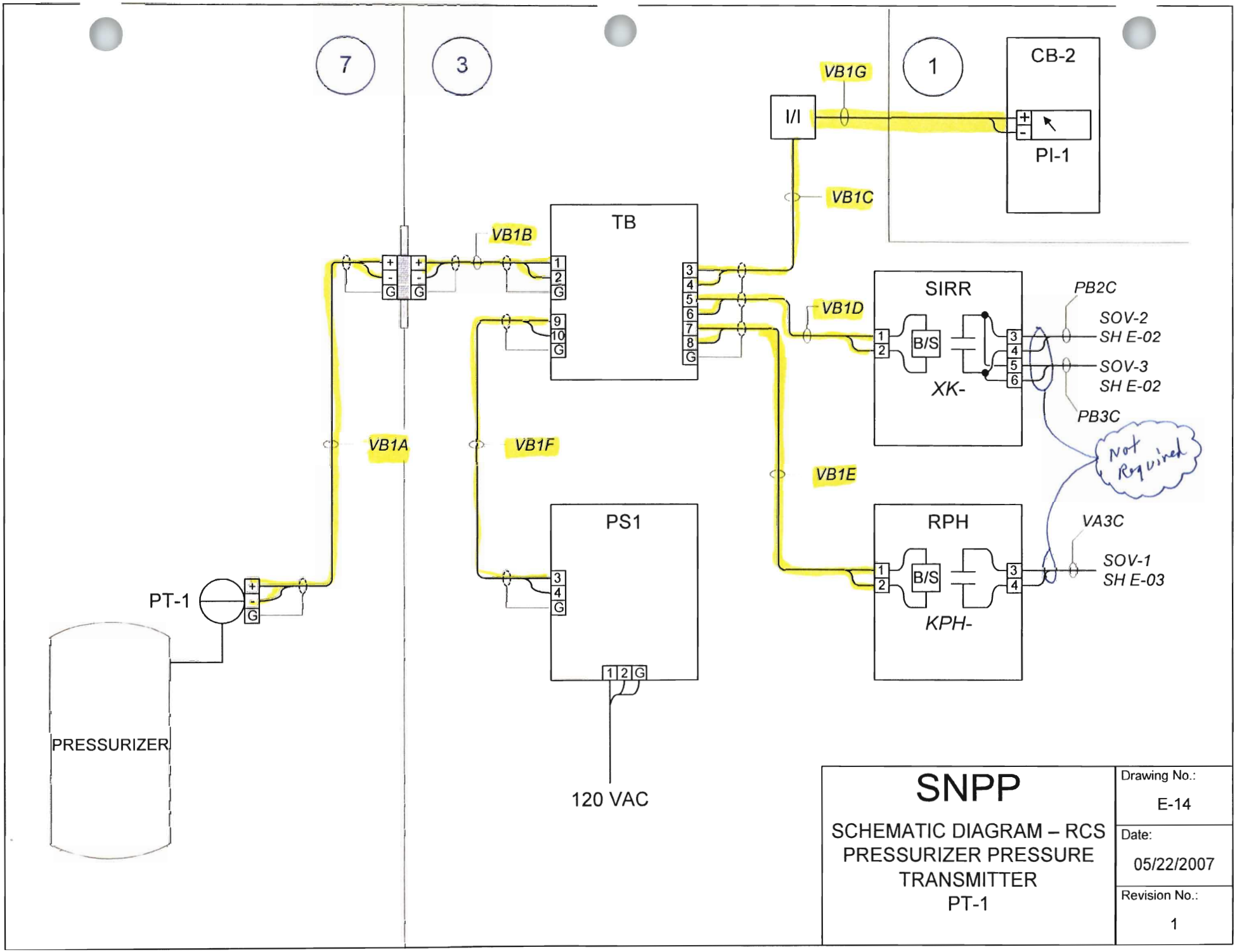

SNPP

SCHEMATIC DIAGRAM – RCS PRESSURIZER PRESSURE TRANSMITTER PT-1

Drawing No.:	E-14
Date:	05/22/2007
Revision No.:	1

Example 11

CIRCUIT ANALYSIS WORKSHEET

Component ID: **ANN-1** Component Type: **Annunciator**

Component Description: **AFW Motor High Temperature**

BE Code: **ANN-1_FH (AFW Pump Motor Spurious High Ann)**

Required Position: Functional State **NON-SPURIOUS**

Normal Position: **AVAILABLE**

Failed Electrical Position: **UNAVAILABLE**

Failed Air Position: **N/A**

High Consequence Component Yes ☐ No ☒

Power Supplies: VITAL-A Breaker: 4

Breaker:

Cable Analysis:

Cable ID	Required?	Function	Fault Consequence	Comments
K16A	Y	IND	LOI, SP-ALM	
K16N	Y	IND	LOI, SP-ALM	
K16B-K16M	N	IND	LOI	

Comments:

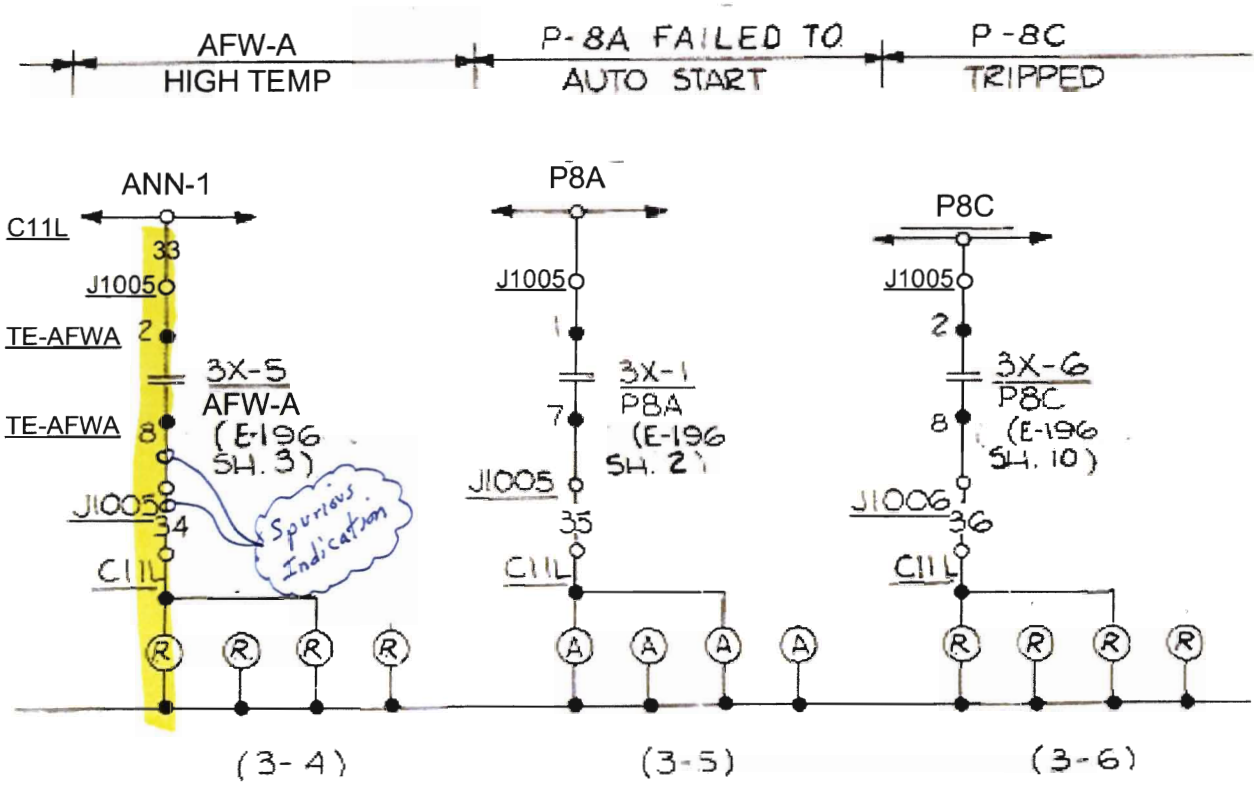

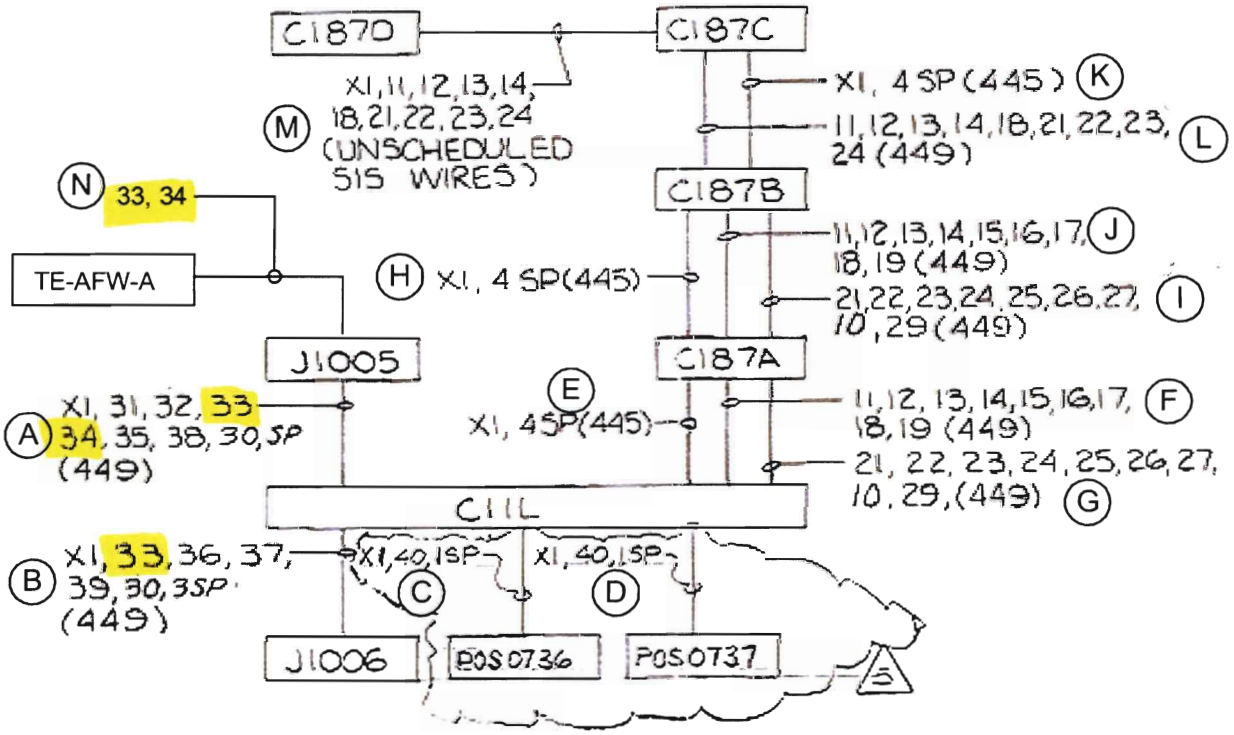

BLOCK DIAGRAM
SCHEME K16

SNPP	Drawing No.: ANN-1
ANNUNCIATOR SCHEME K16	Date: 05/20/2007
	Revision No.: #8

Example 12

CIRCUIT ANALYSIS WORKSHEET

Component ID: **HPI-B** Component Type: **Pump**

Component Description: **High Pressure Injection Pump B**

BE Code: **HPIA_FTS (HPI-A Fails to Start)**
HPIA_FTR (HPI-A Fails to Run)

Required Position: **ON**
Functional State

Normal Position: **STANDBY / ON**

Failed Electrical Position: **Off**

Failed Air Position: **N/A**

High Consequence Component Yes ☐ No ☒

Power Supplies: _____ Breaker: _____

_____ Breaker: _____

Cable Analysis:

Cable ID	Required?	Function	Fault Consequence	Comments
BDG06-P	Y	P	LOP	
BDG06-N	Y	C		
BDG06-D	N	IND	NONE	ISOLATED BY I/I
BDG06-G	N	C	NONE	ISOLATED BY SCB/SS
BDG06-E	Y	C		
BDG06-Z	Y	C		
BDG06-L	Y			DC Control Power

Comments:

_____

_____

_____

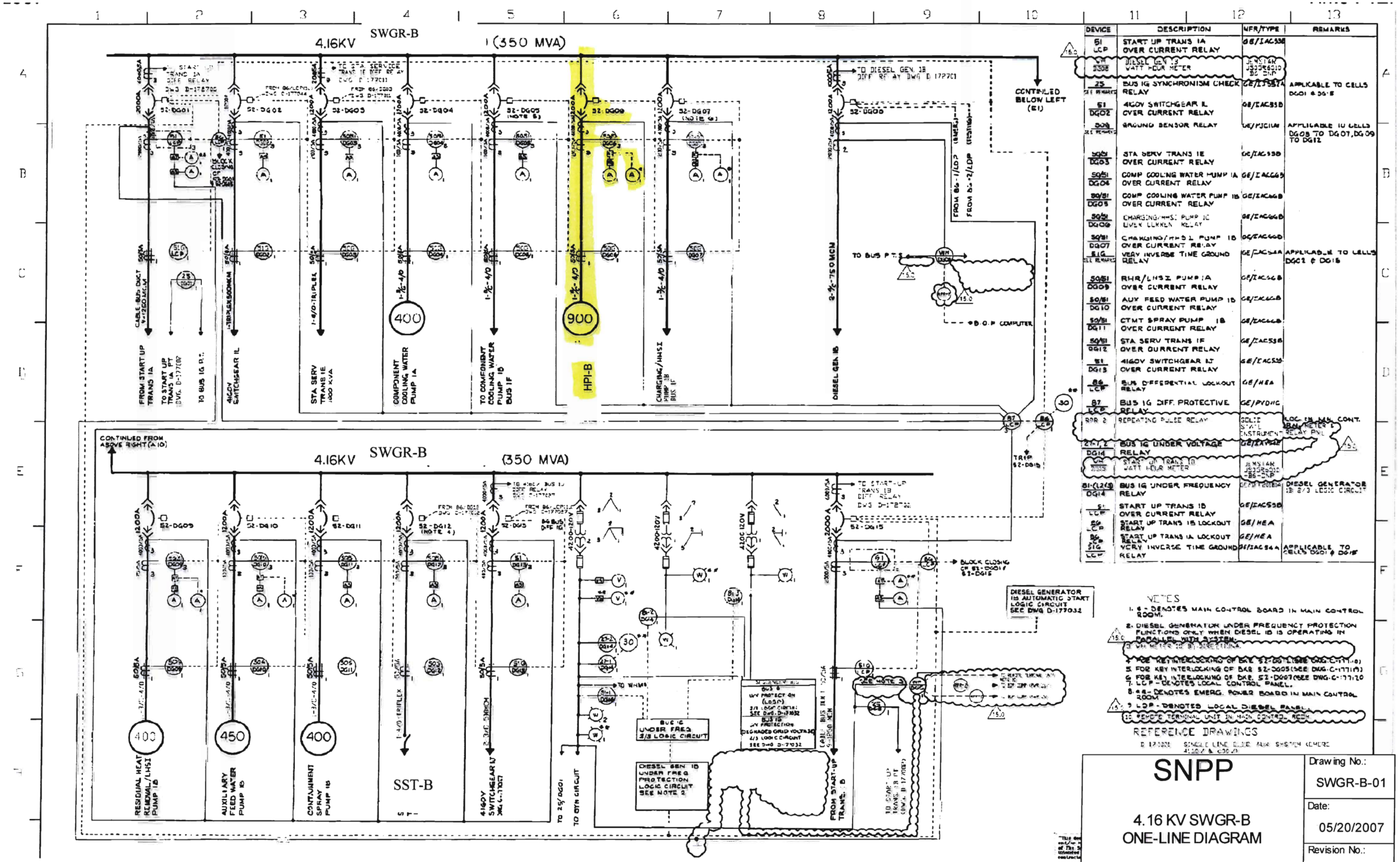

DEVICE	DESCRIPTION	MFR/TYPE	REMARKS
51 LCP	START UP TRANS 1A OVER CURRENT RELAY	GE/IAC53B	
VM DG08	DIESEL GEN 1B WATT HOUR METER	JEWETT J3S3R3010 3E 2W	
25 SEE REMARKS	BUS 1G SYNCHRONISM CHECK RELAY	GE/IJS51A	APPLICABLE TO CELLS DG01 & DG15
51 DG02	4160V SWITCHGEAR 1L OVER CURRENT RELAY	GE/IAC53B	
50G SEE REMARKS	GROUND SENSOR RELAY	GE/PJC11A	APPLICABLE TO CELLS DG03 TO DG07, DG09 TO DG12
50/51 DG03	STA SERV TRANS 1E OVER CURRENT RELAY	GE/IAC53B	
50/51 DG04	COMP COOLING WATER PUMP 1A OVER CURRENT RELAY	GE/IAC66B	
50/51 DG05	COMP COOLING WATER PUMP 1B OVER CURRENT RELAY	GE/IAC66B	
50/51 DG06	CHARGING/HHSI PUMP 1C OVER CURRENT RELAY	GE/IAC66B	
50/51 DG07	CHARGING/HHSI PUMP 1B OVER CURRENT RELAY	GE/IAC66B	
SIG SEE REMARKS	VERY INVERSE TIME GROUND RELAY	GE/IAC53A	APPLICABLE TO CELLS DG02 & DG15
50/51 DG09	RHR/LHSI PUMP 1A OVER CURRENT RELAY	GE/IAC53B	
50/51 DG10	AUX FEED WATER PUMP 1B OVER CURRENT RELAY	GE/IAC53B	
50/51 DG11	CTMT SPRAY PUMP 1B OVER CURRENT RELAY	GE/IAC53B	
50/51 DG12	STA SERV TRANS 1F OVER CURRENT RELAY	GE/IAC53B	
51 DG13	4160V SWITCHGEAR 1J OVER CURRENT RELAY	GE/IAC53B	
86 LCP	BUS DIFFERENTIAL LOCKOUT RELAY	GE/HEA	
87 LCP	BUS 1G DIFF. PROTECTIVE RELAY	GE/PVD11C	
RPR 2	REPEATING PULSE RELAY	SOLID STATE INSTRUMENT	LOC IN MAIN CONT. BOARD METER & RELAY PNL
27-1/2 DG14	BUS 1G UNDER VOLTAGE RELAY	GE/IAV53B	
VM	START UP TRANS 1B WATT HOUR METER	JEWETT J3S3R3010 3E 2W	
81-(L2/3) DG14	BUS 1G UNDER FREQUENCY RELAY	GE/IFC51B	DIESEL GENERATOR 1B 2/3 LOGIC CIRCUIT
51 LCP	START UP TRANS 1B OVER CURRENT RELAY	GE/IAC53B	
86 LCP	START UP TRANS 1B LOCKOUT RELAY	GE/HEA	
86 LCP	START UP TRANS 1A LOCKOUT RELAY	GE/HEA	
SIG LCP	VERY INVERSE TIME GROUND RELAY	GE/IAC53A	APPLICABLE TO CELLS DG01 & DG15

NOTES
1. 6 - DENOTES MAIN CONTROL BOARD IN MAIN CONTROL ROOM.
2. DIESEL GENERATOR UNDER FREQUENCY PROTECTION FUNCTIONS ONLY WHEN DIESEL 1B IS OPERATING IN PARALLEL WITH SYSTEM.
3. VM METERS 2W BY 3E METERING.
4. FOR KEY INTERLOCKING OF BKR 52-DG01 (SEE DWG. C-177108)
5. FOR KEY INTERLOCKING OF BKR 52-DG05 (SEE DWG. C-177109)
6. FOR KEY INTERLOCKING OF BKR 52-DG07 (SEE DWG. C-177120
7. LCP - DENOTES LOCAL CONTROL PANEL.
8. 6 - DENOTES EMERG. POWER BOARD IN MAIN CONTROL ROOM.
9. LCP - DENOTES LOCAL DIESEL PANEL.
10. RTU - REMOTE TERMINAL UNIT IN MAIN CONTROL ROOM.

REFERENCE DRAWINGS
D 177008 SINGLE LINE ELEC. ARR. SWITCH. (WHERE 4160V & <480 V)

SNPP

4.16 KV SWGR-B
ONE-LINE DIAGRAM

Drawing No.:	SWGR-B-01
Date:	05/20/2007
Revision No.:	#6

BDG06-E

BDG06-Z

BDG06-G

BDG06-P

BDG06-L

BDG06-N

different w/ bus

isolated

DEVICE	DESCRIPTION	MFR/TYPE	REMARKS
86	LOCKING-OUT RELAY	GE/HEA-6 STYLE 2818B473A22	24V DC OPER COIL 125V DC RESET COIL
2	TIME DELAY PICKUP RELAY (SET AT 10 SEC.)	AGA/E70121PC	125V DC 1.5-15 SEC.
2-1	TIME DELAY DROPOUT RELAY (SET AT 1 SEC.)	AGA/E70122PB	125 V DC 0.5-5 SEC.
86X	AUXILIARY RELAY	GE/12HFA151A42H CODE AF	125 V DC

NOTES

1. TS —— TEST SWITCH
2. H —— TRUCK OPERATED CELL SWITCH SHOWN FOR BREAKER IN TEST POSITION.
3. SEQUENCER LOAD SHEDDING CIRCUIT BIF, DWG D-177688 (BIG, DWG D-177654).
4. ENGINEERED SAFEGUARD SEQUENCER BIF, DWG D-177645 (BIG, DWG D-177646).
5. LOSS OF OFFSITE POWER SEQUENCER BIF, DWG D-177649 (BIG D-177680).
6. THE COMPUTER OPERATOR ADDRESS NUMBERS FOR DG06 & DG06 ARE V01000 & V01020, RESPECTIVELY.
7. CABLES IVBDG06F & IVBDG06H SHOULD BE ROUTED INDEPENDENTLY OF CABLES IVBDG06E & IVBDG06G.
8. CABLE IVBDG06G SHOULD BE ROUTED INDEPENDENTLY OF CABLES IVBDG06E, F & H.
9. SEE DRAWING A-181981 FOR FUSE RATING & TYPE.

REFERENCE DRAWINGS

D-177001 - SINGLE LINE ELEC AUX SYSTEM (EMERG - 4160V & 600V)

D-177005 - SINGLE LINE PROTECTION & METERING 4160V SWITCH GEAR BUS 1F

D-177006 - SINGLE LINE PROTECTION & METERING 4160V SWITCH GEAR BUS 1G

A-177538 - ELEC GENERAL DETAILS & NOTES

A-181981 - FUSE REPLACEMENT MANUAL FOR SAFETY RELATED EQUIPMENT.

BLOCK DIAGRAM

EQUIPMENT	FAC	SCHEME	SWITCH REAR CELL	M1 MOTOR	RMS REMOTE HAND SWITCH	DRAWING - S.S.T. ACCESS NO.	SQ SEQUENCER PANEL	MCB MAIN CONTROL BOARD	TC TERMINATION CABINET	HSP LOCAL HOT SHUTDOWN PANEL	SSB SELECTOR SWITCH BOX NUMBER	START-UP NUMBER
CHARGING/HIGH HEAD SAFETY INJECTION PUMP	1C	IV	BDG06	DG06	01E21 M0010C-B	01E21 M5450AC-B	U167936	Q1R23 E0015-B	Q1H11 M5MC825031AB	Q1H25 L027-B	Q1H21MBA AFP26058-B	Q1H21MBA FP2505C-B	40

TC TERMINAL NO	E	F	M	A	J	K	G	B
	1TB2-29	1TB2-30	1TB2-31	1TB2-32	1TB2-33	1TB2-34	1TB2-35	1TB2-36

AP(MCB) TERMINAL NOS	1	2	3
	TB4-7	TB2-8	TB4-5

ANN. WINDOW	A	B
	B1 (PNL "E")	B2 (PNL "E")

SSB TERMINAL NOS	A	B	C	D	E
	TB4-43	TB4-25	TB4-26	TB4-27	TB4-44

SSB TERMINAL NOS	F	G	H	I	J	K	M	N	L	O	P	Q	R	S	T	V	W	X	Y
	TB4-32	TB4-31	TB4-28	TB4-29	TB4-30	TB4-45	TB4-24	TB4-34	TB4-46	TB4-47	TB4-23	TB4-48	TB4-35	TB4-37	TB4-38	TB4-40	TB4-41	TB4-42	TB4-50

HSP TERMINAL NOS	A	B	C	D	E	F	G
	TB4-6	TB4-1	TB4-2	TB4-0	TB4-5	TB4-8	TB4-9

SS SELECTOR SWITCH	LHS LOCAL HAND SWITCH
01E21 MS360CB-D	01E21 MS360CA-B

TS TRIP CLOSE

CONTACTS	POSITION		
	CLOSE	NORM	TRIP
1-2	X		
3-4			X

TEST SWITCH
AC TYPE 210
CAT. NO 210-EE-999
SPRING RETURN TO NORMAL

AMMETER SWITCH
GE SBM TYPE
MODEL NO 16S6BICAIS
MAINTAINED CONTACTS

REMOTE HAND SWITCH
GEMCO CAT. NO
4043EEE-V-AA2,AA3
SPRING RETURN TO AUTO

LHS LOCAL HAND SWITCH
GE SBM TYPE
MOD NO 10AA107
SPRING RETURN TO NORMAL

SELECTOR SWITCH
GE SBM TYPE
MODEL NO SBM1AR
12 AAA096
MAINTAINED CONTACTS,
OVAL HANDLE

SNPP

HPI-B SCHEMATIC DIAGRAM
SHEET 1

Drawing No.: HPI-B-01

Date: 05/20/2007

Revision No.: #6

DEVICE	DESCRIPTION	MFR/TYPE	REMARKS
86	LOCKING-OUT RELAY	W/MG-6 STYLE 2818473A22	24V DC OPER COIL 125VDC RESET COIL
2	TIME DELAY PICKUP RELAY (SET AT 10 SEC.)	AGA/E7002PC	125 V DC 1.5-15 SEC.
2-1	TIME DELAY DROPOUT RELAY (SET AT 1 SEC.)	AGA/E7022PB	125 V DC 0.5-5 SEC.
86X	AUXILIARY RELAY	G.E./ 12 HFA151A42H CODE 42	125 V DC

NOTES

1. TS —— TEST SWITCH
2. H —— TRUCK OPERATED CELL SWITCH SHOWN FOR BREAKER IN TEST POSITION.
3. SEQUENCER LOAD SHEDDING CIRCUIT BIF, DWG D-177688(BIG,DWG D-177654).
4. ENGINEERED SAFEGUARD SEQUENCER BIF, DWG D-177645(BIS,DWG D-177640).
5. LOSS OF OFFSITE POWER SEQUENCER BIF, DWG D-177649(BIG D-177650).
6. THE COMPUTER OPERATOR ADDRESS NUMBERS FOR DPDG & DGDG ARE YD1000 & YD1020, RESPECTIVELY.

REFERENCE DRAWINGS

D-177001- SINGLE LINE ELEC AUX SYSTEM (EMERG- 4160V & 600V)
D-177005- SINGLE LINE PROTECTION & METERING 4160V SWITCH GEAR BUS 1F
D-177006- SINGLE LINE PROTECTION & METERING 4160V SWITCH GEAR BUS 1G
A-177538- ELEC GENERAL DETAILS & NOTES

BLOCK DIAGRAM

This document contains proprietary, confidential, and/or trade secret information of the subsidiaries of The Southern Company or of third parties. It is intended for use only by employees of, authorized contractors of, the subsidiaries of The Southern Company. Unauthorized possession, use, distribution, copying,

SNPP

HPI-B SCHEMATIC DIAGRAM
SHEET 2

Drawing No.: HPI-B-02
Date: 05/20/2007
Revision No.: #6

Example 13

CIRCUIT ANALYSIS WORKSHEET

Component ID: **COMP-1** Component Type: **Compressor**

Component Description: **Instrument Air Compressor**

BE Code: **COMP-1_FTR (COMP-1 Fails to Run)**

Required Position: Functional State **CYCLE**

Normal Position: **CYCLE**

Failed Electrical Position: **Off**

Failed Air Position: **N/A**

High Consequence Component Yes ☐ No ☒

Power Supplies: LC-1 Breaker: LC1-15

Breaker:

Cable Analysis:

Cable ID	Required?	Function	Fault Consequence	Comments
YEG06-P	Y	P	LOP	
YEG06-A	Y	C	LOP	FAULTS COULD CAUSE LOP TO AIR COMPRESSOR SKID
YEQ17-A	Y	C	Los of Cooling H_2O, LOC	
YEQ17-B	Y	C	LOC	
YEQ17-E	Y	C	LOC	
YEQ17-I	Y	C	LOC	
YEQ17-H	Y	C	Fail off	
YEQ17-M	Y	C	LOC, fail off	

Comments:

① Air Compressor Sequence Control Mounted on COMP-1 Skid

② Motor winding heater not required

CIRCUIT ANALYSIS WORKSHEET

Component ID: COMP-1 Continuation Sheet (2 of 2)

Cable Analysis:

Cable ID	Required?	Function	Fault Consequence	Comments
YEQ17-N	N	IND	NONE	ANNUNCIATION ONLY
YEQ17-T	N	IND	NONE	ANNUNCIATION ONLY

YEG06-A

YEG06-P

480 V Load Center LC-1 Feeder Bkr LC1-15

600V BUS 2C

52-15

To Air Compressor COMP-1

125V DC BUS

BREAKER CLOSE

BREAKER TRIP

52-EG06 AUXILIARY CONTACTS

52-EG06 CELL SWITCH CONTACTS (H)

ELEM. DIAG. 600V BUS 2Q FEEDER BKR. EQ17

600V BUS 2Q

52-EQ17

TO AIR COMPRESSOR 2B THIS DWG. SH. 1

52-EQ17 AUXILIARY CONTACTS

52-EQ17 CELL SWITCH CONTACTS (H)

LEGEND

H - TRUCK OPERATED CELL SWITCH SHOWN WITH BREAKER IN TEST POSITION

OTS - OVERCURRENT TRIP SWITCH

REFERENCES:

0-207013, SH.1 SINGLE LINE PROTECTION & METERING 600V LOAD CTR. 2C

0-207676, SH.1 SINGLE LINE PROTECTION & METERING 600V LOAD CTR. 2Q

SEE 0-202745, SH.1 FOR ADDITIONAL CABLES USING THIS SCHEME

SEE THIS DWG, SH.1 FOR ADDITIONAL CABLES USING THIS SCHEME

EG06

EQ17

LOCAL CONTROL PANEL (LCP)

AIR COMPR. COMP-1

AIR COMPR. 2B (AC)

SNPP

INSTRUMENT AIR COMPRESSOR COMP-1

Drawing No.: COMP-1-02

Date: 05/20/2007

Revision No.: #6

LC1-15

YEQ17-B

YEQ17-I

YEQ17-E

YEQ17-A

YEQ17-N
YEQ17-T

Heater Not Required

YEQ17-H

YEQ17-M

COM. 1

E1

E2.1

SNPP

INSTRUMENT AIR
COMPRESSOR COMP-1

Drawing No.:	COMP-1-02
Date:	05/20/2007
Revision No.:	#5

Example 14

CIRCUIT ANALYSIS WORKSHEET

Component ID: **SWGR-B** Component Type: **Switchgear**

Component Description: **Train B 4160V Switchgear**

BE Code: **PNL-B EPS-4VBUSBF-2 (4KV BUS B FAULT)**

Required Position: Functional State **ENERGIZED FROM EDG-B**

Normal Position: **ENERGIZED FROM SUT-1**

Failed Electrical Position: **Off**

Failed Air Position: **N/A**

High Consequence Component Yes ☐ No ☒

Power Supplies: _____ Breaker: _____

_____ Breaker: _____

Cable Analysis:

Cable ID	Required?	Function	Fault Consequence	Comments

Comments:

_____

_____

_____

Example 15

CIRCUIT ANALYSIS WORKSHEET

Component ID: **LC-B** Component Type: **Load Center**

Component Description: **Train B 480 V Load Center**

BE Code: **EPS-480VLCBF** **(480V LOAD CENTER B FAULT)**

Required Position: Functional State **ENERGIZED**

Normal Position: **ENERGIZED**

Failed Electrical Position: **Off**

Failed Air Position: **N/A**

High Consequence Component Yes ☐ No ☒

Power Supplies: SST-B Breaker: N/A

PNL-B Breaker: 11

Cable Analysis:

Cable ID	Required?	Function	Fault Consequence	Comments
AED02-A	Y	C	LOC, Loss-Protection	
AED02-B	Y	C	LOC, Loss-Protection	
AED02-Z	Y	C	LOC, Loss-Protection	
AED12-A	N	C	NONE	KIRK-KEY INTERLOCK
AED12-B	N	C	NONE	KIRK-KEY INTERLOCK
AED12-P	N	P	NONE	LOP FROM LC-1F
AED12-Q	N	P	NONE	LOP FROM LC-1F
AED12-R	N	P	NONE	LOP FROM LC-1F

Comments:

CIRCUIT ANALYSIS WORKSHEET

Component ID: LC-B

Continuation Sheet (2 of 2)

Cable Analysis:

Cable ID	Required?	Function	Fault Consequence	Comments
AED12-W	N	C	NONE	KIRK-KEY INTERLOCK
AL1B06-A	Y	P	Loss of Control Pwr	Supply Breakers
AL1B06-B	Y	P	Loss of Control Pwr	Feeder Breakers
ADF14-Y	Y	C	Fail Load Shed	
AEA01-Y	Y	C	Fail Load Shed	
AED01-A	Y	C	Fail Load Shed	
AED01-B	Y	C	Fail Load Shed	

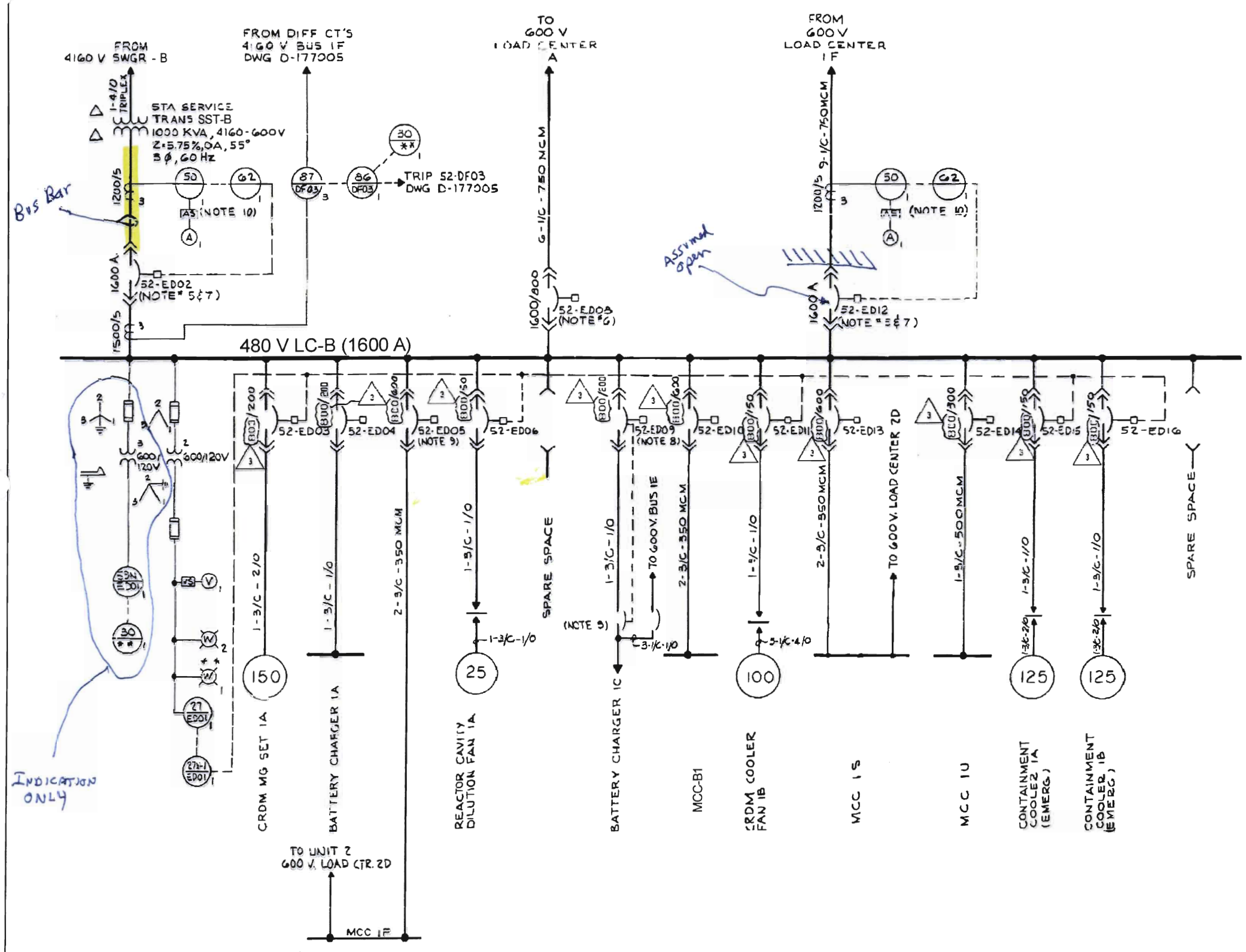

DEVICE	DESCRIPTION	MFR/TYPE	REMARKS
50 / NOTE 10	STA. SERVICE TRANSF. 1D OVER CURRENT RELAY, 3Ø	GE/PJC32G	
G2 / NOTE 10	TIME DELAY RELAY	AGASTAT/ E7012PA	
50 / NOTE 10	OVER CURRENT RELAY, 3Ø, FOR INC FDR FROM LOAD CTR 1F	GE/PJC32G	
G2 / NOTE 10	TIME DELAY RELAY	AGASTAT/ E7012PA	
87 / DF03	STA SERVICE TRANSF 1D DIFFERENTIAL RELAY	GE/12STDIFCHA	
86 / DF03	STA. SERVICE TRANSF 1D LOCKING OUT RELAY	G.E/HEA	
59N / ED01	BUS 1D OVER VOLTAGE RELAY (GROUND DETECTION)	WEST/CV-8	
27 / ED01	BUS 1D UNDER VOLTAGE RELAY	WEST/CV-2	
27X-1 / ED01	BUS 1D UNDER VOLTAGE AUXILIARY RELAY.	WEST/MG-6	

NOTES

1. ** - DENOTES EMERG. POWER BOARD IN MAIN CONT. RM.
2. INTERRUPTING RATING OF ACB'S IS 22,000 AMPS RMS SYMMETRICAL (MIN)
3. BUS SHORT CIRCUIT RATING 22,000 AMPS SYMMETRICAL.
4. STATION SERVICE TRANSFORMER "ASKAREL" TYPE.
5. BREAKERS 52-ED02 AND 52-ED12 ARE KEY INTERLOCKED SO THAT ONLY ONE CAN BE CLOSED AT ANY TIME (DWG. B-177175)
6. BREAKERS 52-ED08 AND 52-EA09 (ON 600V. BUS 1A) ARE OPERATED BY A SINGLE CONTROL SWITCH IN THE MAIN CONTROL ROOM.
7. ALL BKR'S EXCEPT 52-ED02 & 52-ED12 HAVE SOLID STATE TRIP UNITS WITH FOLLOWING DESIGNATIONS (BREAKER FRAME / SENSOR RATING - AMPERES)
8. BREAKERS 52-ED09, 52-EE06 AND MOLDED CASE BKRS. TO BATTERY CHARGER 1C ARE KEY INTERLOCKED SO THAT ONLY ONE BREAKER AND CORRESPONDING MOLDED CASE BKRS CAN BE CLOSED AT ANY TIME (DWG. C-177133).
9. UNIT 1 BREAKER ED06 IS ELECTRICALLY INTERLOCKED WITH UNIT 2 BREAKER ED06 TO PREVENT SIMULTANEOUS CLOSING OF BOTH BREAKERS
10. LOCATED IN TERMINAL BLOCK COMPARTMENT ABOVE ASSOCIATED BREAKER
11. THIS DRAWING SUPERSEDES DRAWING C-177010, SHT 1 OF 1 REV. 14, DATED 11 15 90, PER PCN S 93 1 8690, REV 0

REFERENCE DRAWINGS

A-177538 - ELECTRICAL GENERAL DETAILS & NOTES
D-177001 - SINGLE LINE ELEC. AUX. SYSTEM (4160 / 600V)

SNPP LOAD CENTER B (LC-B) ONE-LINE DIAGRAM	Drawing No.: LC-B-01 Date: 05/20/2007 Revision No.: #6

DEVICE	DESCRIPTION	MFR/TYPE	REMARKS
52	TIME DELAY PICK-UP RELAY	AGA/E70:2PA	125V DC 0.: TO 1.5 SEC

600 V LOAD CENTER

1500/5A

TO TRANS. DIFF PROTECTION
TRANS. ID (DWG D-177171)
TRANS. IB (DWG D-177171)

Transformer differential included w/ SST-B

52

AM SW

0-1200A

local AM only

Bus Bar

FROM STA SERVICE TRANSFORMER

ALIB36-A

Pwr. to TO 125 V DC DIST. PANEL

TO D.C. CKT, L.C. BLDG. DWG D-177087

TO OTHER INC. BKR CONTROL CIRCUIT

E0-12

FUSE SEE NOTE 2

CLOSE | TRIP | LOCAL CONTROL PANEL INDICATION | LOAD CENTER INDICATION | EPB INDICATION | PROTECTION

AED02-A

AED02-Z

AED02-B

BREAKER CLOSE

BREAKER TRIP

62 TDPU

TRIP BKR

SPARE

ALARM

EPB ANNUN. PANEL V, WINDOW G1
(PANEL V, WINDOW G1)

HS

NOTES:

1. H-TRUCK OPERATED CELL SWITCH SHOWN FOR BREAKER IN "TEST" POSITION.
8 2. REFER TO FUSE MANUAL A-181987 FOR FUSE RATING AND TYPE.

AMMETER

AMMETER SWITCH
(W) TYPE W-2
SK 7674976G01
ROUND FIXED HANDLE

CONTACT	POSITION							
	0	-	-	-	2	-	-	B
A1-B11	X	X		X	X	X	X	X
A2-B12	X	X	X	X	X		X	X
A3-B3	X	X	X	X	X	X	X	X
A5-B5		X	X	X				
A6-B6				X	X	X		
A7-B7							X	X

EQUIPMENT	FAC	SCHEME	LOAD SEQ CONT.	LCP LOCAL CONTROL PANEL	LCP START UP NUMBER	EPB EMERGENCY POWER BOARD	TC TERMINATION CABINET	PI POSITION INDICATOR LIGHT
INCOMING BREAKER FROM 600V LOAD CENTER	IB	IV	AED02	ED02	Q-M21 E009-A	5	Q-M25 EPB2538-AB	J237-A	Q-216 ZL20:88A-A
	IE	IV	BEB02	ED02	Q-M21 E010-B	5	Q-M25 EPB2538-AB	J239-B	Q-216 ZL20:88A-B

HANDSWITCH
GE SBM TYPE
MODEL NO. 10A8116
SPRING RETURN TO CENTER
PULL TO LOCK IN TRIP POSITION

HS

CONTACTS HANDLE END ODD	EVEN	CLOSE	AFT CLOSE	AFT TRIP	TRIP	SEAL-IN COIL
	1	X				
	2				X	X
	3		X	X	X	X
	4	X	X	X	X	
	5		X	X		
	6	X	X			

SP
SP
ALARM
ALARM

SPARE | BKR CONTROL | ALARM | SP | IND. LIGHT | SPARE

LCP H9 — EPB — SPECIAL CABLE

EDO2 — TC

BLOCK DIAGRAM

REFERENCE DRAWINGS

D-177001 - SINGLE LINE, ELECTRICAL AUXILIARY SYSTEM (EMERG. 460V & 600V)

A-177536 - ELECTRICAL GENERAL DETAILS AND NOTES.

D-177010 SINGLE LINE PROTECTION AND METERING 600V LOAD CENTER 1D (EMERGENCY)

D-17701 SINGLE LINE PROTECTION AND METERING 600V LOAD CENTER 1E (EMERGENCY)

SNPP

52-ED-02
BREAKER SCHEMATIC

Drawing No.: LC-B-02

Date: 05/20/2007

Revision No.: #5

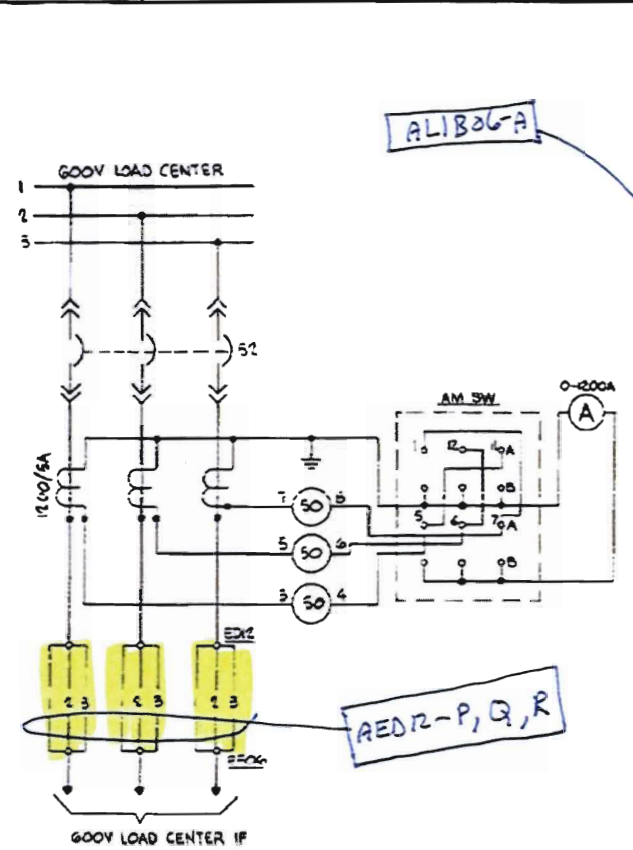

AEDI2-P, Q, R

AEDI2-B

AEDI2-A

AEDI2-W

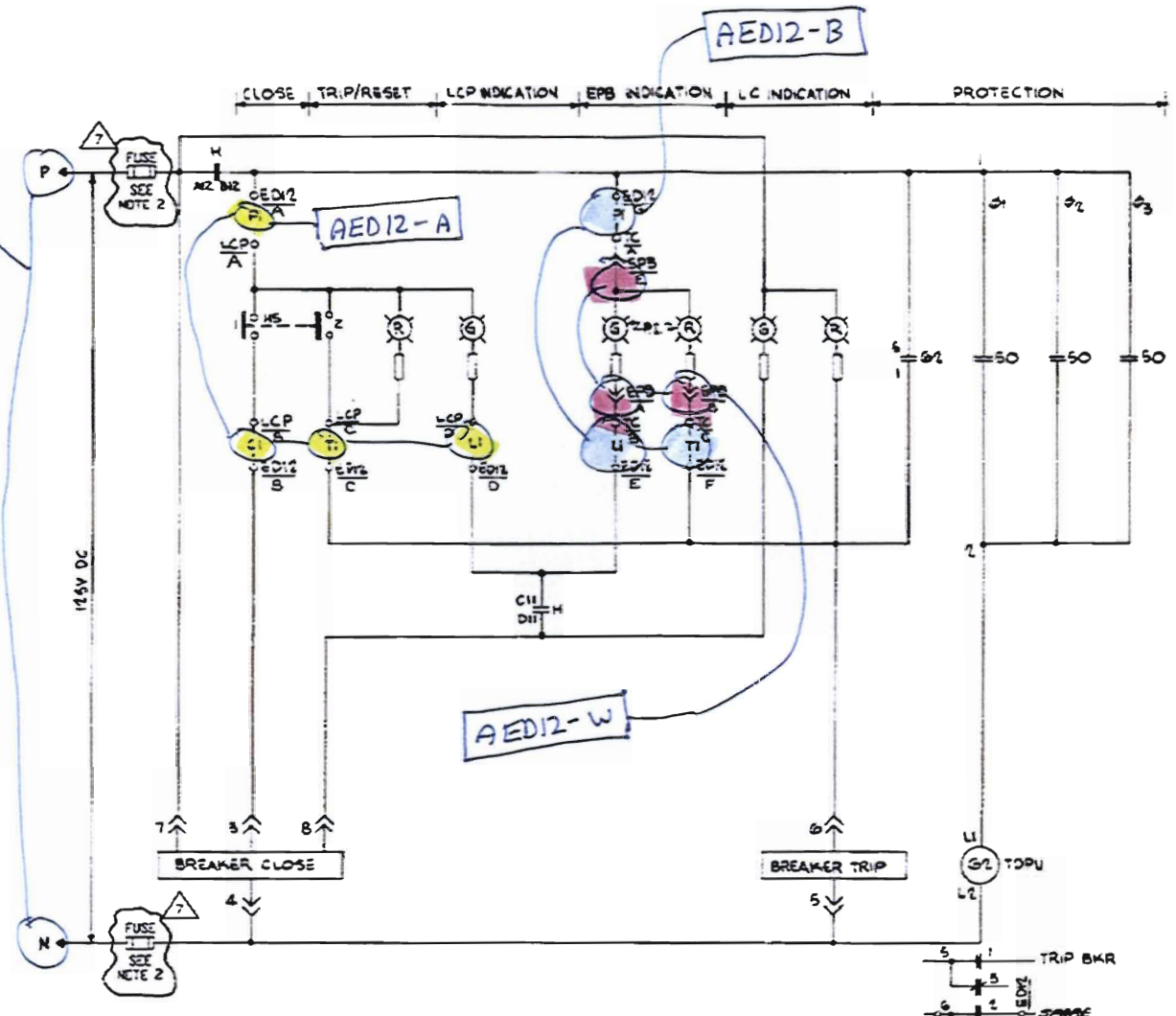

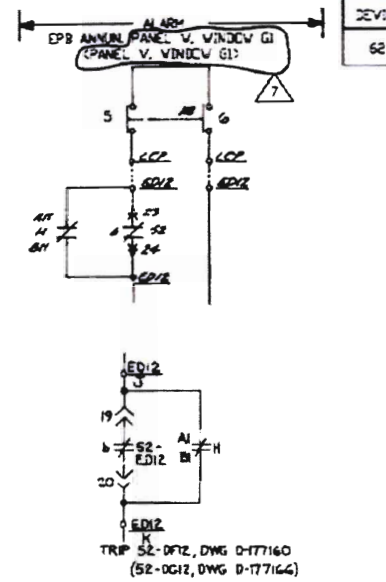

DEVICE	DESCRIPTION	MFR/TYPE	REMARKS
62	TIME DELAY PICK-UP RELAY	ASASTAT E7323PA	125V DC G1 TO 10 SEC

NOTES:

1. H-TRUCK OPERATED CELL SWITCH SHOWN FOR BREAKER IN "TEST POSITION.
2. REFER TO FUSE MANUAL A-181987 FOR FUSE RATING AND TYPE.

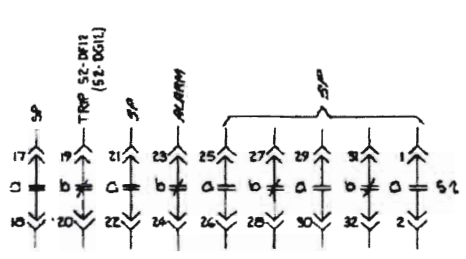

REFERENCE DRAWINGS

A-177638 – ELECTRICAL GENERAL DETAILS AND NOTES
D-177001 – SINGLE LINE ELECTRICAL AUX SYSTEM (EMERG – 4160V & GOOV)
D-177010 – SINGLE LINE PROTECTION AND METERING GOOV L.C. 1D (EMERG)
D-177011 – SINGLE LINE PROTECTION AND METERING GOOV L.C. 1E (EMERG)
D-177012 – SINGLE LINE PROTECTION AND METERING GOOV LOAD CENTER 1F

AMMETER	CONTACT	POSITION		
		0	1	2
OFF 1 3 2	A1 - B1	X	X	
	A2 - B2	X	X	X
	A1 - B2	X	X	X
	A5 - B5		X	X
	A6 - B6			X
	A7 - B7			

AMMETER SWITCH
Ⓦ TYPE W-2, S# 7871497G01
ROUND FIXED HANDLE

EQUIPMENT		FAC	SCHEME	L.C. COMPT.	LCP LOCAL CONTROL PANEL	EPB EMERG POWER BOARD	TC TERMINATION CABINET	PI POSITION IND. LIGHTS	START-UP NUMBER	L.C. COMPT
INCOMING GOOV LOAD CENTER BREAKER	1D	1V	AED12	ED12	Q1H21 EC09-A	Q5H1NG EPB1508-AB	Q1H25 L037-A	Q1R16 ZL20BMA-A	5	EF06
	1E	1V	BEE12	EE12	Q1H21 EC10-B	Q5H1NG EPB1508-AB	Q1H25 L039-B	Q1R16 ZL20BMA-B	5	EF08

LOAD CENTER COMPARTMENT	TERMINAL BLOCK NUMBERS									
	A	B	C	D	E	F	G	H	I	J	K
ED12	A-5	A-7	B-1	E-1	E-11	B-2	A-6	B-5	B-4	C-11	C-12
EE12	A-5	A-7	B-1	E-11	E-11	B-2	A-6	B-5	B-4	C-11	C-12

LOCAL CONTROL PNL	TERMINAL BLOCK NUMBERS			
	A	B	C	D
ED12	TB7-5	TB7-11	TB7-14	TB7-12
EE12	TB10-5	TB10-6	TB10-7	TB10-8

TERMINATION CABINET	TERMINAL BLOCK NUMBERS		
	A	B	C
QH25L037-A	1TB2-38	1TB2-36	1TB2-37
QH25L039-B	3TB1-33	3TB1-31	3TB1-32

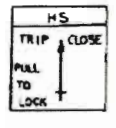

HANDSWITCH
GE SBM TYPE
MODEL NR 10AA16
SPRING RETURN TO CENTER
PULL TO LOCK IN TRIP POSITION.

CONTACTS HANDLE END			CLOSE	ANTI-CLOSE	ANTI-TRIP	TRIP	PULL TO LOCK	
ODD	EVEN	1	X					
		2				X	X	
		3		X	X	X	X	SP
		4	X	X	X	X		SP
		5		X	X			ALARM
		6	X	X				ALARM

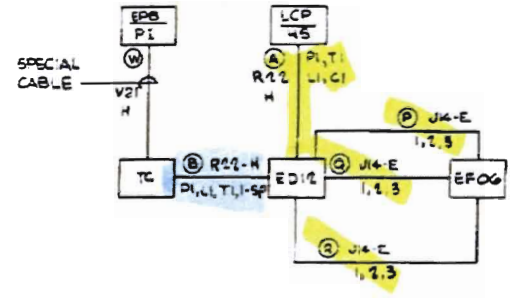

SNPP	
52-ED-12 SCHEMATIC	
Drawing No.:	LC-B-03
Date:	05/20/2007
Revision No.:	#6

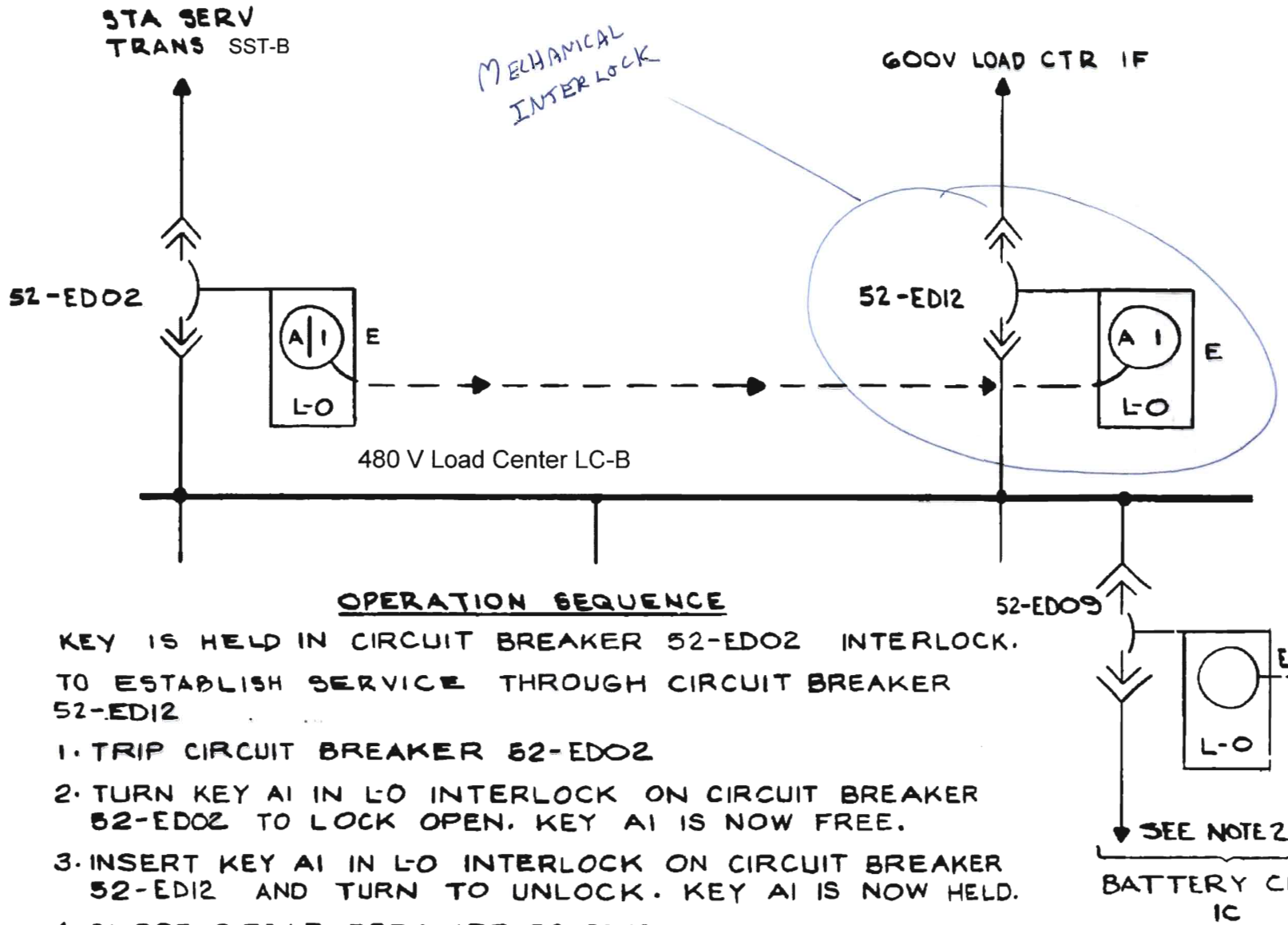

OPERATION SEQUENCE

KEY IS HELD IN CIRCUIT BREAKER 52-ED02 INTERLOCK.

TO ESTABLISH SERVICE THROUGH CIRCUIT BREAKER 52-ED12

1. TRIP CIRCUIT BREAKER 52-ED02
2. TURN KEY A1 IN L-O INTERLOCK ON CIRCUIT BREAKER 52-ED02 TO LOCK OPEN. KEY A1 IS NOW FREE.
3. INSERT KEY A1 IN L-O INTERLOCK ON CIRCUIT BREAKER 52-ED12 AND TURN TO UNLOCK. KEY A1 IS NOW HELD.
4. CLOSE CIRCUIT BREAKER 52-ED12.

REVERSE SEQUENCE TO RESTORE SERVICE THROUGH CIRCUIT BREAKER 52-ED02.

NOTE : AS AN EXCEPTION FOR MAINTENANCE WORK PER A PLANT PROCEDURE, TWO KEYS MAY BE USED TO OVERRIDE THE NORMAL CIRCUIT BREAKER INTERLOCK FEATURE. 4

NOTES

1. ALL INTERLOCKS ARE KIRK TYPE
2. CIRCUIT BREAKERS 52-ED09, 52-EE06 & MOLDED CASE BREAKERS TO BATTERY CHARGER 1C ARE KEY INTERLOCKED SO THAT ONLY ONE BREAKER AND CORRESPONDING BATTERY CHARGER MOLDED CASE BREAKER CAN BE CLOSED AT ANY TIME (SEE DWG C-177133)

LEGEND

A1 / L-O — INTERLOCK WITH KEY HELD.

A1 / L-O — INTERLOCK WITH KEY REMOVED.

L-O — (LOCKED OPEN) INDICATES THAT THE KEY IS REMOVABLE WHEN THE CIRCUIT BREAKER IS LOCKED IN THE OPEN POSITION.

E — INDICATES KEY REMOVABLE ONLY WHEN BOLT EXTENDED.

INTERLOCK KEY TABLE

INTERLOCK	KEY NUMBER
A1	RE-14204

REFERENCE DWG.

D-177001 - SINGLE LINE ELEC AUX SYSTEM (4160V & 600V)

C-177010 - SINGLE LINE PROTECTION & METERING 600V LOAD CENTER 1D

A-177538 - ELEC GEN DETAILS & NOTES

SNPP LC-B INCOMING BREAKER INTERLOCKS	Drawing No.: LC-B-04 Date: 05/20/2007 Revision No.: #6

DEVICE	DESCRIPTION	MFR / TYPE	REMARKS
27X-1	UNDERVOLTAGE AUXILIARY RELAY	(W)/VG-G	125 V DC
27X-2	UNDERVOLTAGE AUXILIARY RELAY	(W)/VG-G	125V DC

480 V LOAD CENTER

480 V/120V

480 V/120V

1000 AL 65KAIC AT 600A

(SEE NOTE 5) FUSE 7A

(SEE NOTE 5) FUSE 10A

(SEE NOTE 5) FUSE 6A

(SEE NOTE 5) FUSE 6A

SEE DETAIL "A"

VG

From Incoming DC

AE401-Y

AE401-B

AE401-A

ADF14-Y

SEE UNDERVOLTAGE AUXILIARY RELAY TRIP FUNCTION TABLE

ALARM

BUS GROUND DETECTOR

LOAD CENTER 1A

LOAD CENTER LC - B

LOAD CENTER 1C

LOAD CENTER 1E

LOAD CENTER 1B

DETAIL "A" - A.C. POTENTIAL LIGHTS

LC-A LC-B LC-1C LC-1E

DETAIL "B" - D.C. POTENTIAL LIGHTS

NOTES

1. DOES NOT APPLY TO E804.
2. SEAL IN CONTACT TO BE DISCONNECTED
3. CABLE FOR D.C. POTENTIAL LIGHTS.
4. CABLE FOR A.C. POTENTIAL LIGHTS.
5. SEE DRAWING A-181588 FOR E-B RATING AND PHOTOGRAPHS OF EACH BOARD AND DEVICE.

VOLTMETER SWITCH

CONTACT	POSITION OFF	1	2	3
1 - 0				
2A1 - 2B1		X	X	
3 - 0				
2A1 - 2B2		X		X
4 - 0				
2A2 - 2B2			X	X

(W) TYPE W-11 6 PHASE POSITION ROUND FIXED HANDLE MAINTAINED CONTACTS

UNDERVOLTAGE AUXILIARY RELAY TRIP FUNCTION TABLE

27X-1 E804	DC BAR COVER	TRIP FUNCTION	DWG NO	27X-2 E804	DC BAR COVER	TRIP FUNCTION	DWG NO	27X-1 E804	DC BAR COVER	TRIP FUNCTION	DWG NO	27X-1 E804	DC BAR COVER	TRIP FUNCTION	DWG NO
1-5	E803	SPARE		1-5	E803	SPARE		1-5	E803	SPARE		1-5	E803	SPARE	
2-6	E804	CRDM MG SET 1A	D-177004	2-6	E804	CRDM MG SET 1B	D-177004	2-6	E804	CRDM MG SET 1A	D-177004	2-6	E804	CRDM MG SET 1B	D-177004
3-7	E805	CRDM COOLER A (EMERG)	D-177005	3-7	E805	CRDM COOLER C (EMERG)	D-177005	3-7	E805	CRDM COOLER A (EMERG)	D-177005	3-7	E805	CRDM COOLER C (EMERG)	D-177005
4-8	E806	CRDM COOLER FAN 1A	D-177006	4-8	E806	CRDM COOLER FAN 1B	D-177006	4-8	E806	CRDM COOLER FAN 1B	D-177006	4-8	E806	CRDM COOLER FAN 1A	D-177006
5-9	E807	CRDM COOLER B (EMERG)	D-177007	5-9	E807	CRDM COOLER D (EMERG)	D-177007	5-9	E807	CRDM COOLER D (EMERG)	D-177007	5-9	E807	CRDM COOLER B (EMERG)	D-177007
6-10	E808	REACTOR CAVITY POOL SYSTEM A COMP A	D-177008	6-10	E808	REACTOR CAVITY POOL SYSTEM A COMP B	D-177008	6-10	E808	REACTOR CAVITY POOL SYSTEM A COMP A	D-177008	6-10	E808	REACTOR CAVITY POOL SYSTEM A COMP B	D-177008
7-11	E809	SPARE		7-11	E809	SPARE		7-11	E809	SPARE		7-11	E809	SPARE	
8-12		SPARE		8-12		SPARE		8-12		SPARE		8-12		SPARE	

27X-1 E804	DC BAR COVER	TRIP FUNCTION	DWG NO
1-5	E803	SPARE	
2-6	E804	CRDM MG SET 1A	D-177004
3-7	E805	CRDM COOLER A (EMERG)	D-177005
4-8	E806	CRDM COOLER FAN 1B	D-177006
5-9	E807	CRDM COOLER B (EMERG)	D-177007
6-10	E808	REACTOR CAVITY POOL SYSTEM A COMP A	D-177008
7-11	E809	SPARE	
8-12		SPARE	

(W) CONTACTS MAIN MAKE BEFORE AUX BREAK TO PREVENT NO CONTACT 7-8 TO 12

REFERENCE DRAWINGS

- A-177538 — ELECTRICAL GENERAL DETAILS AND NOTES
- D-177000 — SINGLE LINE ELECTRICAL AUX SYSTEM (NORMAL - MCC & SWGR)
- D-177001 — SINGLE LINE ELECTRICAL AUX SYSTEM (EMERG - 4.16KV & SWGR)
- D-177007 — SINGLE LINE PROTECTION AND METERING SWGR LOAD CENTER 1A
- D-177008 — SINGLE LINE PROTECTION AND METERING SWGR LOAD CENTER 1B
- D-177009 — SINGLE LINE PROTECTION AND METERING SWGR LOAD CENTER 1C
- D-177010 — SINGLE LINE PROTECTION AND METERING SWGR LOAD CENTER 1E (EMERG)
- A-181981 — FUSE REPLACEMENT MANUAL FOR SAFETY RELATED EQUIPMENT.

BLOCK DIAGRAMS

SCHEME AE401 — (B) -R2-H PC-H 4,6 — (3) -R2-H PZ-H 4,6 — TC — EPB — (1) VR2-H (THIS DWG & D-177283) — PART OF SPECIAL CABLE (SEE DWGS D-177282, D-177283, & 72828) NOTE-3 NOTE-4

SCHEME E804 — (3) -R2-H PZ-H 4,6 — (4) -R2-H PC-H 4,6 — TC — EPB — (2) VR2-H (THIS DWG) — PART OF SPECIAL CABLE (THIS DWG) NOTE-3 NOTE-4 — PART OF SPECIAL CABLE (NEARLY PARALLELED ON THIS DWG. NOTE-4) — PART OF SPECIAL CABLE (NEARLY PARALLELED ON DWG D-177283) NOTE-3

SCHEME E803 — (2) -R2-H PC-H 4,6 — (1) -R2-H PZ-H 4,6 — TC — EPB — (1) VR2-H (THIS DWG) — PART OF SPECIAL CABLE (THIS DWG) NOTE-3 NOTE-4 — PART OF SPECIAL CABLE (NEARLY SCHEDULED ON DWG D-177283)

SCHEME E809 — (B) -R2-H PZ-H 4,6 — (3) -R2-H PC-H 4,6 — TC — EPB — (3) VR2-H — PART OF SPECIAL CABLE NOTE-3 NOTE-4 — PART OF SPECIAL CABLE (NEARLY SCHEDULED ON DWG D-177168)

SCHEME E807 — (A) -R21-H 4,6 — TC — PART OF SPECIAL CABLE (NEARLY PARALLELED ON DWG. D-177186) NOTE-4 — MCB — LB

REFERENCE DRAWINGS

SNPP	Drawing No.: LC-B-05
LOAD CENTER UNDERVOLTAGE SCHEME	Date: 05/20/2007
	Revision No.: #6

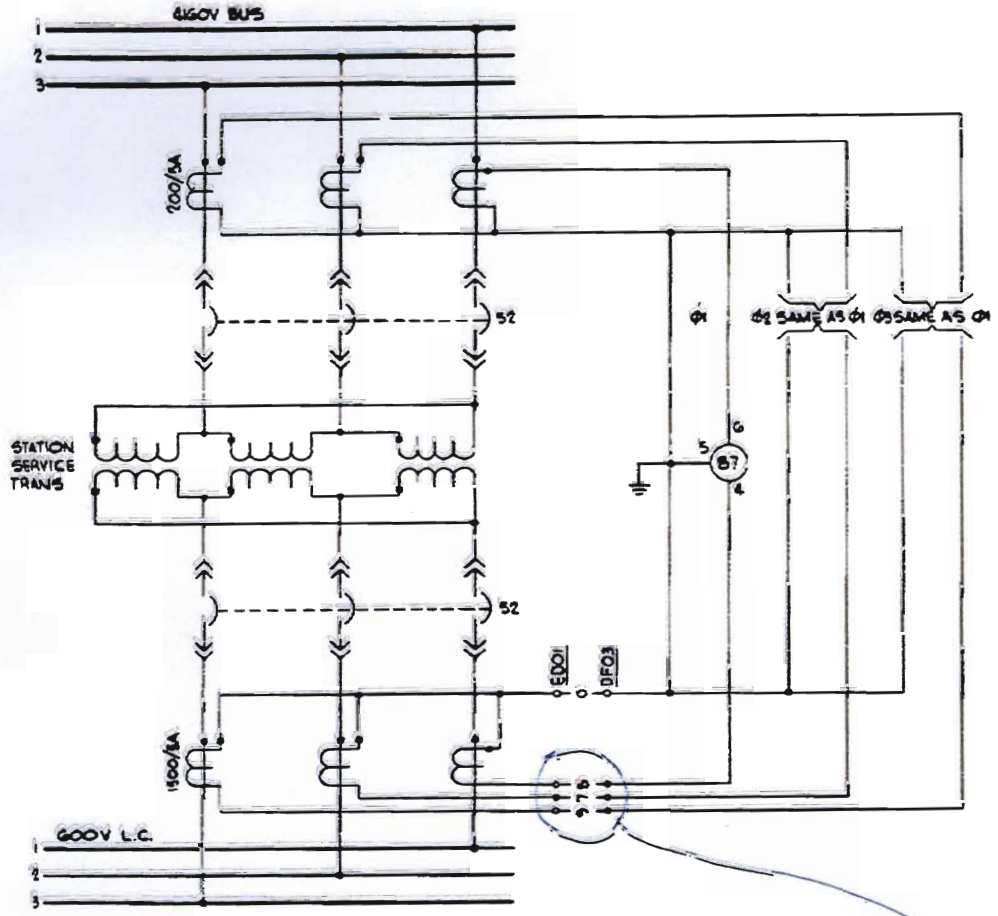

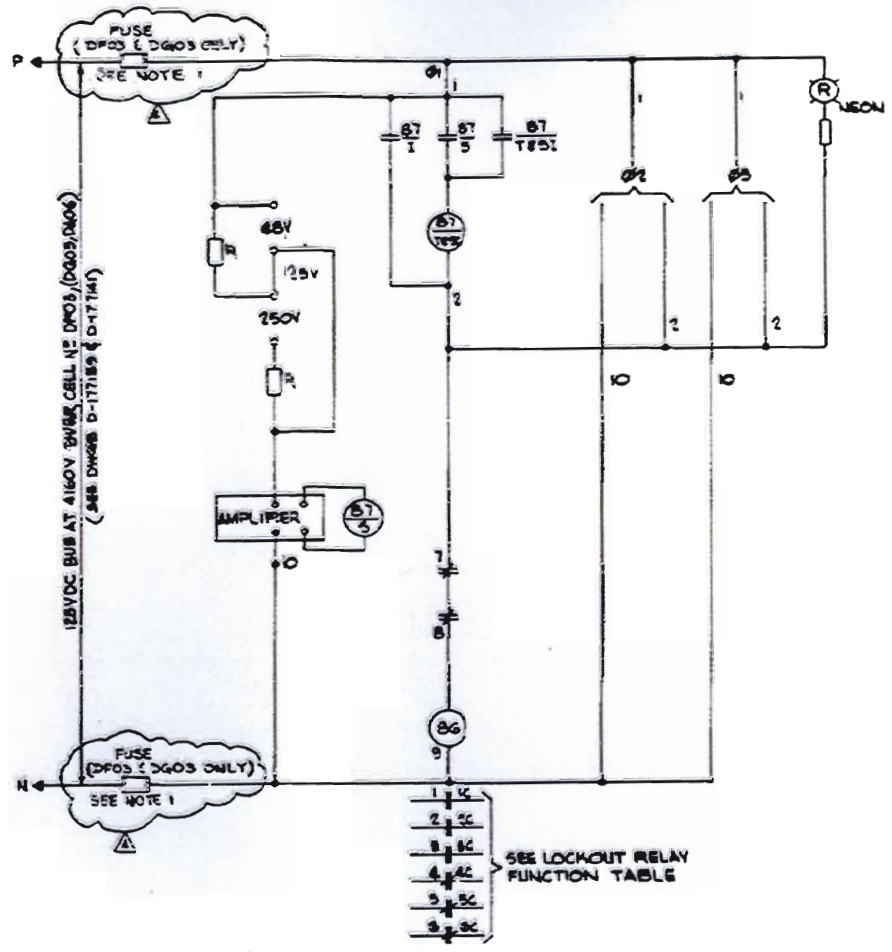

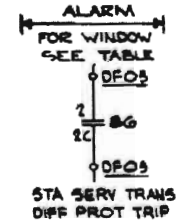

DEVICE	DESCRIPTION	MFR/TYPE	REMARKS
86	LOCKOUT RELAY	GE/HEA61223	125V DC

NOTES:
1. SEE DRAWING A-181987 FOR FUSE RATING & TYPE.

LOCKOUT RELAY FUNCTION TABLE

86 DFO3	FUNCTION	DWG NO	86 DGO3	FUNCTION	DWG NO	86 DA06	FUNCTION	DWG NO
1 1C	TRIP BKR 52-DFO3	C-177159	1 1C	TRIP BKR 52-DGO3	C-177159	1 1C	TRIP BKR 52-DA06	D-177141
2 2C	ALARM	THIS DWG	2 2C	ALARM	THIS DWG	2 2C	ALARM	THIS DWG
3 3C	SPARE	—	3 3C	SPARE	—	3 3C	SPARE	—
4 4C	SPARE	—	4 4C	SPARE	—	4 4C	BLOCK CLOSING BKR 52-DA06	D-177141
5 5C	BLOCK CLOSING BKR 52-DFO3	C-177159	5 5C	BLOCK CLOSING BKR 52-DGO3	C-177159	5 5C	SPARE	—
6 6C	SPARE	—	6 6C	SPARE	—	6 6C	SPARE	—

EQUIPMENT		FAC	SCHEME	SWGR CELL	LOAD CENTER COMPARTMENT	START-UP NUMBER	ANNUNCIATOR WINDOW NO.
DIFFERENTIAL RELAY FOR STATION SERV TRANSFORMER	ID	IV	ADFO3	DFO3	EDO1	5	EPB PANEL "F" E1
	IE	IV	BDGO3	DGO3	EEO1	5	EPB PANEL "F" E2
	II	IV	XDA06	DA06	EIO1	5	TCB PANEL "F" E2

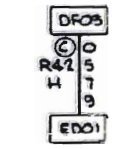

BLOCK DIAGRAM

REFERENCE DRAWINGS

A-177538 — ELECTRICAL GENERAL DETAILS AND NOTES
D-177001 — SINGLE LINE ELECTRICAL AUX SYSTEM (EMERG - 4160V & 600V)
D-177002 — SINGLE LINE PROTECTION AND METERING 4160V SWITCHGEAR BUS 1A
D-177005 — SINGLE LINE PROTECTION AND METERING 4160V SWITCHGEAR BUS 1F (EMERG)
D-177006 — SINGLE LINE PROTECTION AND METERING 4160V SWITCHGEAR BUS 1G (EMERG)
C-177010 — SINGLE LINE PROTECTION AND METERING 600V LOAD CENTER 1D (EMERG)
C-177011 — SINGLE LINE PROTECTION AND METERING 600V LOAD CENTER 1E (EMERG)
C-177674 — SINGLE LINE PROTECTION AND METERING 600V LOAD CENTER 1I
A-181987 — FUSE REPLACEMENT MANUAL FOR SAFETY RELATED EQUIPMENT.

SNPP

STATION SERVICE TRANSFORMER DIFFERENTIAL PROTECTION SCHEME

Drawing No.: LC-B-06

Date: 05/20/2007

Revision No.: #6

Example 16

CIRCUIT ANALYSIS WORKSHEET

Component ID: **MCC-1B** Component Type: **MCC**

Component Description: **Train B 480 V Motor Control Center**

BE Code: **EPS-480MCCB1F (480V MCC B1 FAULT)**

Required Position: Functional State **ENERGIZED**

Normal Position: **ENERGIZED**

Failed Electrical Position: **Off**

Failed Air Position: **N/A**

High Consequence Component Yes ☐ No ☒

Power Supplies: LC-B Breaker: ED-10

Breaker:

Cable Analysis:

Cable ID	Required?	Function	Fault Consequence	Comments
BEE10-P	Y	P	LOP	
BEE10-A	Y	C	LOC, SO	
BEE10-B	Y	C	LOC, SO	
BEE10-Z	Y	C	LOC, SO	

Comments:

① Breaker control power included in analysis for LC-B.

② MCC-1B has no main breaker. Power cables connected directly to bus.

③ Annunciation circuits not required for functionality.

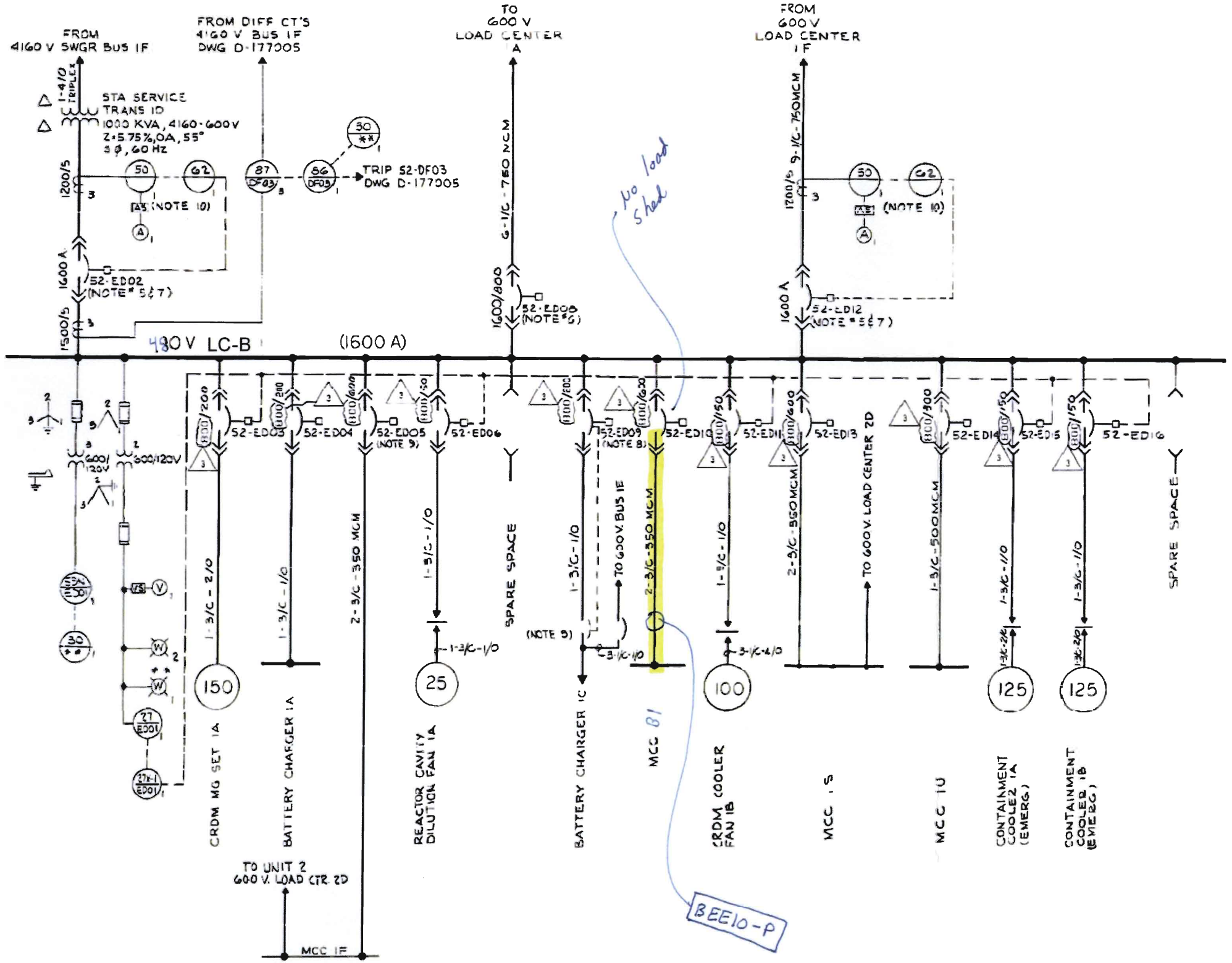

DEVICE	DESCRIPTION	MFR/TYPE	REMARKS
50 NOTE 10	STA SERVICE TRANSF 1D OVER CURRENT RELAY, 3Ø	GE/PJC32G	
62 NOTE 10	TIME DELAY RELAY	AGASTAT/ E7012PA	
50 NOTE 10	OVER CURRENT RELAY, 3Ø, FOR INC FDR FROM LOAD CTR 1F	GE/PJC32G	
62 NOTE 10	TIME DELAY RELAY	AGASTAT/ E7012PA	
87 DF03	STA SERVICE TRANSF 1D DIFFERENTIAL RELAY	GE/12STD15CDA	
86 DF03	STA SERVICE TRANSF 1D LOCKING OUT RELAY	G.E./HEA	
59N ED01	BUS 1D OVER VOLTAGE RELAY (GROUND DETECTION)	WEST/CV-8	
27 ED01	BUS 1D UNDER VOLTAGE RELAY	WEST/CV-2	
27Y-1 ED01	BUS 1D UNDER VOLTAGE AUXILIARY RELAY	WEST/MG-6	

NOTES

1. ** - DENOTES EMERG POWER BOARD IN MAIN CONT. RM.
2. INTERRUPTING RATING OF ACB'S IS 22,000 AMPS RMS SYMMETRICAL (MIN)
3. BUS SHORT CIRCUIT RATING 22,000 AMPS SYMMETRICAL.
4. STATION SERVICE TRANSFORMER "ASKAREL" TYPE.
5. BREAKERS 52-ED02 AND 52-ED12 ARE KEY INTERLOCKED SO THAT ONLY ONE CAN BE CLOSED AT ANY TIME (DWG. B-177125)
6. BREAKERS 52-ED08 AND 52-EA09 (ON 600V BUS 1A) ARE OPERATED BY A SINGLE CONTROL SWITCH IN THE MAIN CONTROL ROOM.
7. ALL BKR'S EXCEPT 52-ED02 & 52-ED12 HAVE SOLID STATE TRIP UNITS WITH FOLLOWING DESIGNATIONS (BREAKER FRAME/SENSOR RATING-AMPERES)
8. BREAKERS 52-ED09, 52-EE06 AND MOLDED CASE BKRS TO BATTERY CHARGER 1C ARE KEY INTERLOCKED SO THAT ONLY ONE BREAKER AND CORRESPONDING MOLDED CASE BKRS CAN BE CLOSED AT ANY TIME (DWG-C-177153).
9. UNIT 1 BREAKER ED06 IS ELECTRICALLY INTERLOCKED WITH UNIT 2 BREAKER ED06 TO PREVENT SIMULTANEOUS CLOSING OF BOTH BREAKERS
10. LOCATED IN TERMINAL BLOCK COMPARTMENT ABOVE ASSOCIATED BREAKER.
11. THIS DRAWING SUPERSEDES DRAWING D-177010, SHT 1, DF 1 REV 14, DATED 11 15 95 PER PCN S 93 1 8590, REV 0

REFERENCE DRAWINGS

A-177538 - ELECTRICAL GENERAL DETAILS & NOTES
D-177001 - SINGLE LINE ELEC. AUX SYSTEM (4160 & 600V)

SNPP	Drawing No.: LC-B-01
LOAD CENTER B (LC-B) ONE-LINE DIAGRAM	Date: 05/20/2007
	Revision No.: #6

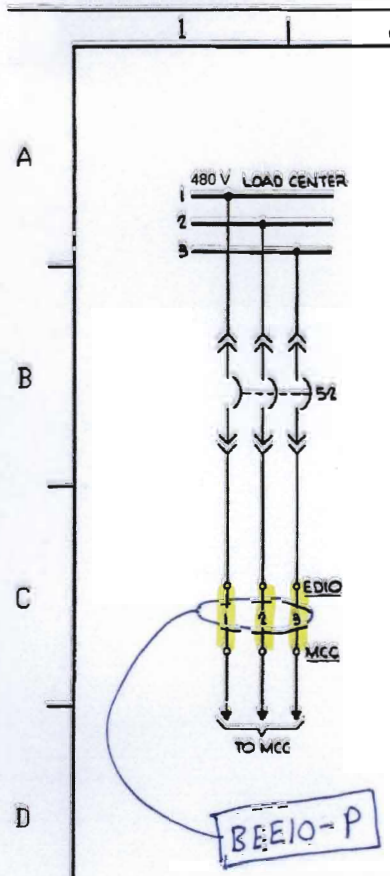

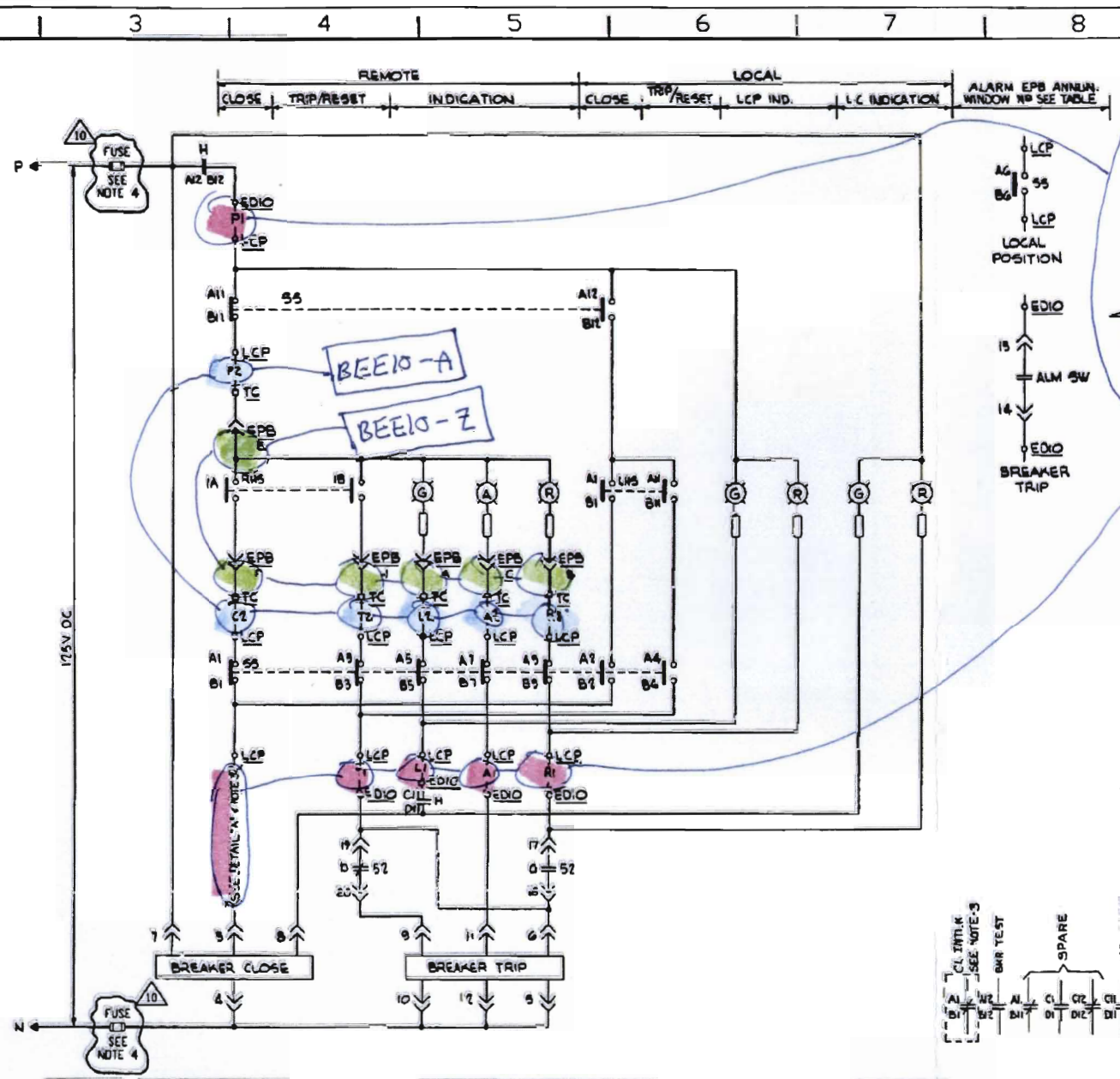

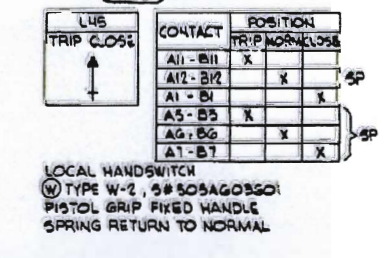

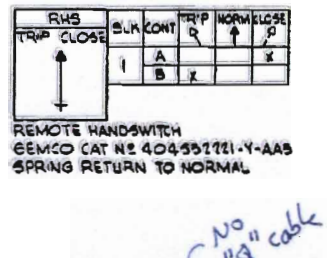

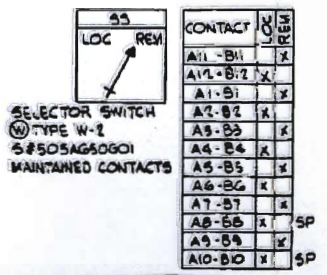

EQUIPMENT	FAC	SCHEME	L.C. COMPT.	LCP LOCAL CONTROL PANEL	EPB EMERGENCY POWER BOARD	TC TERMINATION CAB:NET	START-UP NUMBER	POWER CABLE CODE	MCC MOTOR CONT CENTER	CONDUCTOR-NO CABLE	CABLE	RHS REMOTE HANDSWITCH	EPB ANNUNCIATOR WINDOW NO. BKR ON LOCAL CONTROL	BKR TRIP	LC COMPT
GOOV LOAD CENTER BKR'S TO MOTOR CONTROL CENTER	1A	IV	AEDO	EDIO	QIW2\EDO9-A	QIH2SL037-A	6	LO9-F	FA-A2	1,2,3	1,2,3	QIR1GHS2018KA-A	PANEL V, WINDOW G2	PANEL V, WINDOW G1	
	1B	IV	BEE10	EE10	QIW2\EDIO-B	QIH2SL039-B	6	LO9-F	FB-A2	1,2,3	1,2,3	QIR1GHS2019KA-B	PANEL V, WINDOW G2	PANEL V, WINDOW G1	
	1F	IV	AEDOS	EDOS	QIW2\EDO9-A	QIH2SL037-A	6	LO9-F	FF-A2	1,2,3	1,2,3	QIR1GHS2018EA-A	PANEL V, WINDOW G2	PANEL V, WINDOW G1	EDO5-2
	1G	IV	BEE11	EE11	QIW2\EDIO-B	QIH2SL039-B	6	LO9-F	FG-A2	1,2,3	1,2,3	QIR1GHS2019LA-B	PANEL V, WINDOW G2	PANEL V, WINDOW G1	EE09-2
	1T	IV	BEE14	EE14	QIW2\EDIO-B	QIH2SL039-B	6	LO9-F	FT-A1	1,2,3	1,2,3	QIR1GHS2019PA-B	PANEL V, WINDOW G2	PANEL V, WINDOW G1	
	1U	IV	AEDO4	EDI4	QIW2\EDO9-A	QIH2SL037-A	6	LIO-F	FU-A1	1,2,3		QIR1GHS2018PA-A	PANEL V, WINDOW G2	PANEL V, WINDOW G1	
	1V	IV	BEE15	EE15	QIW2\EDIO-B	QIH2SL039-B	6	LIO-F	FV-A1	1,2,3		QIR1GHS2019QA-B	PANEL V, WINDOW G2	PANEL V, WINDOW G1	

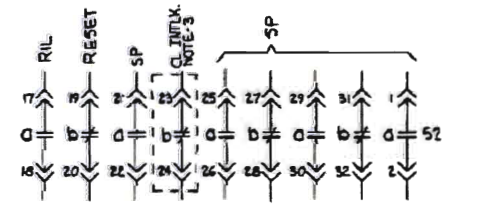

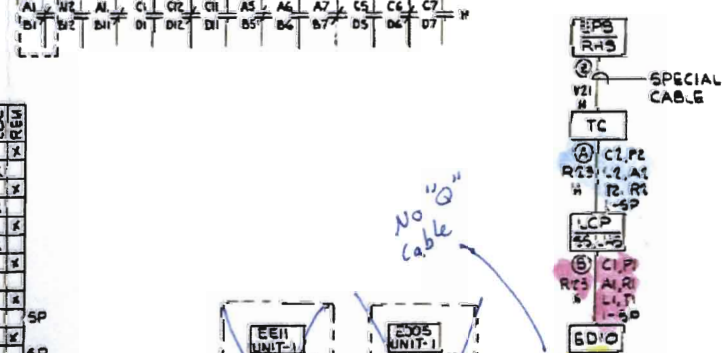

NOTES:

1. H-TRUCK OPERATED CELL SWITCH SHOWN FOR BREAKER IN TEST POSITION.
2. CONTENTS DELETED
3. FOR SCHEMES AEDO5, AND BEE 11 ONLY MCC's IF 1 & 2 ARE FED FROM TWO LOAD CENTERS EACH. TO PREVENT SIMULTANEOUS CLOSING, UNIT 1 & UNIT 2 FEEDER BKRS TO THESE MCC'S ARE ELECTRICALLY INTERLOCKED. (SEE TABLE FOR BKRS)
4. REFER TO FUSE MANUAL A-181987 FOR FUSE RATING AND TYPE

REFERENCE DRAWINGS

A-177538 — ELECTRICAL GENERAL DETAILS AND NOTES
D-177001 — SINGLE LINE ELECTRICAL AUXILIARY SYSTEM (EMERG-41GOV & GOOV)
D-177010 — SINGLE LINE PROTECTION & METERING GOOV LOAD CENTER 1D (EMERG)
D-177011 — SINGLE LINE PROTECTION & METERING GOOV LOAD CENTER 1E (EMERG)

SNPP

MOTOR CONTROL CENTER
MCC-1B

Drawing No.: MCC-B1-01
Date: 05/20/2007
Revision No.: #6