Entergy

Entergy Nuclear Northeast
Entergy Nuclear Operations, Inc.
James A. Fitzpatrick NPP
P.O. Box 110
Lycoming, NY 13093
Tel 315-342-3840

JAFP-08-0099
September 26, 2008

U.S. Nuclear Regulatory Commission
Attn: Document Control Desk
Washington, DC 20555

SUBJECT: James A. FitzPatrick Nuclear Power Plant
Docket No. 50-333
License No. DPR-59

James A. FitzPatrick Request for Relief (RR-7) - Proposed Alternative to ASME Code Requirements for Weld Overlay Repairs

Dear Sir or Madam:

Pursuant to 10 CFR 50.55a(a)(3), Entergy hereby submits James A. FitzPatrick Nuclear Power Plant (JAF) Relief Request RR-7, "Alternative Repair Plan Reactor Pressure Vessel Nozzle-to-Safe End Weld Using Code Case N-740 with Exceptions".

During Refueling Outage R-18, a flaw was found by ultrasonic testing (UT) examination on the Reactor Vessel Nozzle-to-Safe End weld N2-C. In order to restore the pressure boundary and structural integrity of the Nozzle-to-Safe End weld, JAF proposes to perform full structural weld overlays based on ASME Code Cases N-740 and N-638-1, with certain exceptions. The proposed plan is an alternative to the ASME Section XI, Subsection IWA-4000, "Repairs and Replacements". Details of the full structural weld overlay and requested exceptions to the Code Case N-740 are described in Attachment 2.

In accordance with 10 CFR 50.55a (a)(3), proposed alternatives to ASME Section XI, Subsection IWA-4000 may be approved by the NRC provided an acceptable level of quality and safety are maintained. JAF believes the proposed alternative meets this requirement.

JAF requests approval of the relief request by October 3, 2008 in support of the current refueling outage.

If you have any questions or require additional information, please contact Mr. Eugene Dorman, Acting Licensing Manager, at 315-349-6810.

Enclosure 1 contains Request for Relief RR-7, Alternative Repair plan for Reactor Pressure Vessel Nozzle-to-Safe End Welds and Enclosure 2 contains four new regulatory commitments.

Sincerely,

E. W. Dorman

Eugene Dorman
Acting Licensing Manager

ED/ed

A047
NRR

cc list next page:

cc:

Mr. Samuel J. Collins, Regional Administrator
U.S. Nuclear Regulatory Commission, Region
475 Allendale Road
King of Prussia, PA 19406-1415

Office of NRC Resident Inspector
James A. Fitzpatrick Nuclear Power Plant
P.O. Box 136
Lycoming, New York 13093

Mr. Paul Tonko, President
New York State Energy Research and
Development Authority
17 Columbia Circle
Albany, New York 12203-6399

Mr. Bhalchandra Vaidya, Project
Manager
Plant Licensing Branch
U.S. Nuclear Regulatory Commission
Mail Stop O-8-C2A
Washington, DC 20555

Mr. Charles Donaldson, Esquire
Assistant Attorney General
New York Department of Law
120 Broadway
New York, New York 10271

Mr. Paul Eddy
New York State Department of Public
Services
3. Empire State Plaza
Albany, New York 12223-1350

Enclosure 1 to JAF-08-0099

James A. Fitzpatrick Nuclear Power Station
Docket No. 50-333

RELIEF REQUEST RR-7,
ALTERNATIVE REPAIR PLAN FOR REACTOR PRESSURE VESSEL
NOZZLE-TO-SAFE END WELD

Enclosure 1 JAFP-08-0099
Relief Request RR-7

Enclosure 1 Table of Contents

Relief Request 7 (RR-7)	13 Pages
Attachment 1 Dissimilar Metal Weld Details and Figures	2 Pages
Attachment 2 Proposed Alternative for Full Structural Weld Overlays	7 Pages
Attachment 3 Proposed Ambient Temperature Temperbead Technique	4 Pages
Attachment 4 Comparison of ASME Code Case N-504-3 and Appendix Q Of ASME Section XI with the Proposed Alternative of Attachment 2 for Full Structural Weld Overlays	8 Pages
Attachment 5 Technical Basis for Alternative to ASME Code Case N-638-1, *Ambient Temperature Temperbead Welding*	3 Pages

ENTERGY NUCLEAR OPERATIONS, INC.
James A. FitzPatrick Nuclear Power Plant

REQUEST FOR RELIEF
JAF RR-7

I. ASME CODE COMPONENTS AFFECTED

Components:	ISI Weld N-2C-SE	Reactor Pressure Vessel "N-2C" Nozzle Dissimilar Metal Weld to Recirculation Inlet Piping
Code Class:	1	

References:

1. ASME Section XI - 2001 Edition / 2003 Addenda except as listed in Reference 2
2. ASME Section XI - 2001 Edition to be used for Appendix VIII, "Performance Demonstration for Ultrasonic Examination Systems"
3. ASME Section III, – 1965 Edition/1966 Addenda
4. ASME Section III, Subsection NB – 2001 Edition/2003 Addenda
5. JAF-RPT-06-001, *ASME B&PV Code Section XI, Fourth Ten Year Inspection Interval Inservice (ISI) Program Plan*
6. EPRI Report 1011898, *Justification for the Removal of the 100 Square Inch Temperbead Weld Repair Limitation*
7. EPRI Report GC-111050, *Ambient Temperature Preheat for Machine GTAW Temperbead Applications*
8. EPRI Report 1013558, *Temperbead Welding Applications – 48 hour Hold for Ambient Temperature Temperbead Welding*
9. EPRI Report BWRVIP-75-A, *Technical Basis for Revisions to Generic Letter 88-01 Inspection Schedules (1012621)*
10. ASME Code Case N-740
11. ASME Code Case N-504-3
12. ASME Code Case N-638-1
13. Relief Request RR-5, *Relief from ASME Section XI Appendix VII, Supplement 11 Requirements for Structural Weld Overlays (PDI)*

Unit / Inspection Interval Applicability:	James A. Fitz Patrick Nuclear Power Plant (JAF) / Fourth (4th) 10-Year Interval and the period of extended operation.

II. APPLICABLE CODE REQUIREMENT

The ASME Code (Code), Section XI, Subsections IWA-4411 and IWA-4520(a) require that repair/replacement activities be performed and examined in accordance with the Owner's Requirements and the original Construction Code of the component or system. Alternatively, Subsections IWA-4411(a) and (b) allow use of later Editions/Addenda of the Construction Code (or a later different Construction Code such as ASME Section III) and revised Owner Requirements. Subsections IWA-4411(e) and IWA-4600(b) provide alternative welding methods when the requirements of Subsection IWA-4411 cannot be met. Subsection IWA-4530(a) requires the performance of pre-service examinations based on Subsection IWB-2200 for Class 1 components. Table IWB-2500, Category B-F, prescribes inservice inspection requirements for Class 1 butt welds in piping.

III. REASON FOR PROPOSED ALTERNATIVE

Intergranular stress corrosion cracking (IGSCC) in boiling water reactor (BWR) piping was identified as a problem in the United States in the early 1970s. Initially, cracking was only observed in small-bore piping. However, in 1982 cracking caused by IGSCC was also identified in large-bore piping. JAF manages this condition by performing routine inservice inspections in accordance with ASME Section XI and the inspection requirements of BWRVIP-75A.

JAF is presently in Refueling Outage R-18. During this outage, twelve (12) Category "D"[1] dissimilar metal welds (DMW) have been scheduled for ultrasonic (UT) examination to comply with BWRVIP-75A. Eight (8) of these DMWs are on Reactor Pressure Vessel (RPV) N-2 nozzle-safe-ends. During UT examination of the N-2C nozzle to safe-end DMW, an axial indication approximately 0.8" long with a 0.5" (approximately 40%) through-wall depth was detected. Due to the high IGSCC crack growth rate, the DMW with the axial indication cannot be accepted by an ASME Section XI, IWB-3600 analytical evaluation. As a result, Entergy proposes to repair the subject DMW by installing a structural weld overlay.

JAF performs repair/replacement activities in accordance with the 2001 Edition / 2003 Addenda of ASME Section XI, except as described in Reference 2. This Edition of ASME Section XI does not include requirements for application of a full structural weld overlay. Moreover, requirements for installing full structural weld overlay on DMWs are not presently included in any Edition/Addenda of ASME Section XI (including Code Cases) approved by the NRC.

Structural weld overlays have been used for years on piping of both BWRs and pressurized water reactors (PWRs) to arrest the growth of existing flaws while establishing a new structural pressure boundary. Until recently, these weld overlays were applied in accordance with various revisions of ASME Code Cases N-504 and N-638. (At present, code case revisions N-504-3 and N-638-1 are "conditionally accepted" by the NRC in Regulatory Guide 1.147). Application of these code cases to nozzle DMWs requires a series of relief requests since Code Case N-504-3 was written specifically for stainless steel pipe-to-pipe welds and Code Case N-638-1 contains some restrictions and requirements that are not applicable to weld overlays. In October 2006, Code Case N-740 was approved by the ASME Code Committee to specifically address weld overlays on DMWs. Code Case N-740 also incorporates ambient temperature

[1] As defined in BWRVIP-75A, Category "D" welds "are those not made with resistant materials and not given an SI (Stress Improvement) treatment, but that have been examined by personnel using procedures in conformance with Section 5.2.1 of NUREG-0313, Revision 2, and found to be free of cracks."

temperbead rules that are based on Code Case N-638-3. However, Code Case N-740 has not yet been accepted by the NRC in Regulatory Guide 1.147.

This request for alternative is specific to the N-2C nozzle to safe-end DMW. The subject DMW joins a P-No. 3, Group 3 low alloy steel nozzle to a P-No. 8 austenitic stainless steel safe-end. The DMW was welded with 82/182 weld metal. The full structural weld overlay will be applied by deposition of Alloy 52M (ERNiCrFe-7A) weld metal on the outside surface of the DMW and adjacent base material. See Attachment 1 for additional details.

IV. PROPOSED ALTERNATIVE

Pursuant to 10 CFR 50.55a(a)(3), Entergy proposes the following as an alternative to the Code requirements specified in Section II above. The proposed alternative is applicable to the DMW of the RPV N-2C nozzle.

A. Install a full structural weld overlay in accordance with the proposed alternatives specified in Attachments 2 and 3. These alternatives are based on the methodology of ASME Section XI Code Case N-740.

- Attachment 2 specifies an alternative applicable to the design, fabrication, examination, pressure testing, and inservice inspection of full structural weld overlays.
- Attachment 3 specifies an alternative applicable to ambient temperature temper bead welding. Attachment 3 will be applied as an alternative to the post-weld heat treatment requirements of ASME Section III.

V. BASIS FOR PROPOSED ALTERNATIVE

A. Proposed Alternative for Structural Weld Overlays

Entergy intends to install a full structural weld overlay to the subject DMW in accordance with the proposed alternative of Attachment 2. A tabular comparison of the Attachment 2 proposed alternative with Code Case N-504-3 and Appendix Q of ASME Section XI has been performed and is provided in Attachment 4. Note that ASME Code Case N-504-3 has been conditionally approved by the NRC in Regulatory Guide 1.147 with the condition that the provisions of ASME Section XI, Appendix Q be met when using the Case.

This proposed alternative provides an acceptable methodology for preventing potential failures due to IGSCC based on the use of filler metals that are resistant to this damage mechanism (e.g., Alloy 52M). Procedures that create compressive residual stress profiles along the inside diameter of the original weld, and post-overlay preservice and inservice inspection requirements ensure structural integrity for the life of the plant. The proposed weld overlays will also meet the applicable stress limits from ASME Section III. Crack growth evaluations for IGSCC and fatigue of any conservatively postulated flaws will demonstrate that structural integrity will be maintained. It should also be noted that JAF is on HWC/NMCA chemistry which has been shown to retard crack growth and prevent crack initiation. A basis discussion is provided in BWRVIP-75A.

As stated above, weld overlays will be installed using Alloy 52M filler metal in accordance with Attachment 2. However, Alloy 52M weld metal has a demonstrated sensitivity to certain impurities, such as sulfur, when deposited onto austenitic stainless steel base materials. Therefore, if the impurity level is sufficiently high, it may become necessary to deposit an austenitic buffer layer prior to installation of the weld overlay. While this condition has been limited to PWR applications, Entergy has developed a contingency to install a buffer layer should this unexpected condition occur. If required, a buffer layer of ER308L austenitic stainless steel filler metal will be deposited across the austenitic stainless steel safe-end. While the balance of this layer would be deposited with Alloy 52M weld metal, an Alloy 82 bridge bead (or transitional bead) would be deposited over the fusion line between the existing Alloy 82 weld and stainless steel safe-end. The bridge bead will be deposited with ERNiCrFe-3 filler metal. The ER308L filler metal will have a delta ferrite content of 5 – 15 FN as reported on the CMTR. It will be deposited with a welding procedure and welders that have been qualified in accordance with ASME Section IX. Liquid penetrant (PT) examinations will be performed prior to and after deposition of the buffer layer. The second PT examination is performed to ensure that the completed buffer layer is free from cracks and other unacceptable indications prior to deposition of the Alloy 52M weld overlay. The austenitic stainless steel buffer layer, if required, will not be included in the structural weld overlay thickness as defined in Attachment 2.

1. Weld Overlay Design and Verification

   The fundamental design basis for full structural weld overlays is to maintain the original design margins with no credit taken for the underlying IGSCC-susceptible weldments. The assumed design basis flaw for the purpose of structural sizing of the weld overlay is a flaw completely around the circumference (360°) and 100% through the original wall thickness of the DMWs. The specific analyses and verifications to be performed are summarized as follows:

   - Nozzle-specific stress analyses have been performed to establish a residual stress profile in the nozzle to safe end weld. A severe internal diameter weld repair was assumed in this analysis that effectively bound any actual weld repairs that may have occurred in the nozzle. The analyses simulates application of the weld overlay to determine the final residual stress profile. Post-weld overlay residual stresses at normal operating conditions will be shown to result in beneficial compressive stresses on the inside surface of the components, assuring that further crack initiation due to IGSCC is highly unlikely.

   - Fracture mechanics analyses will also be performed to predict crack growth of detected flaws. Crack growth due to IGSCC and fatigue will be analyzed for the original DMW. The crack growth analyses will consider all design loads and transients, plus the post-weld overlay and through-wall residual stress distributions. The analyses will demonstrate that the postulated cracks will not degrade the design basis for the weld overlays.

   - The analyses will demonstrate that applying the weld overlays does not impact the conclusions of the existing nozzle stress reports. The ASME Code, Section III primary stress criteria will continue to be met.

- Shrinkage will be measured during the overlay application. Shrinkage stresses at other locations in the piping systems arising from the weld overlays will be demonstrated not to have an adverse effect on the systems. Clearances of affected supports and restraints will be checked after the overlay repair and will be reset within the design ranges if required.

- The total added weight on the piping systems due to the overlays will be evaluated for potential impact on piping system stresses and dynamic characteristics.

- The as-built dimensions of the weld overlays will be measured and evaluated to demonstrate that they meet or exceed the minimum design dimensions of the overlays.

2. Suitability of Proposed Ambient Temperature Temperbead Technique

An ambient temperature temperbead welding technique will be used when welding on the ferritic base materials of the nozzles in lieu of the post-weld heat treatment requirements of ASME Section III. Research by the Electric Power Research Institute (EPRI) and other organizations on the use of an ambient temperature temperbead process using the machine gas tungsten arc welding (GTAW) process is documented in EPRI Report GC-111050 (Reference 7). According to the EPRI report, repair welds performed with an ambient temperature temperbead procedure utilizing the machine GTAW process exhibit mechanical properties equivalent to or better than those of the surrounding base material. Laboratory testing, analysis, successful procedure qualifications, and successful repairs have all demonstrated the effectiveness of this process.

a. Suitability of Ambient Temperature Temperbead Welding

The effects of the ambient temperature temperbead welding process of Attachment 3 on mechanical properties of welds, hydrogen cracking, and cold restraint cracking are addressed in the following paragraphs:

- Mechanical Properties

The principal reasons to preheat a component prior to repair welding is to minimize the potential for cold cracking. The two cold cracking mechanisms are hydrogen cracking and restraint cracking. Both of these mechanisms occur at ambient temperature. Preheating slows down the cooling rate resulting in a ductile, less brittle microstructure thereby lowering susceptibility to cold cracking. Preheat also increases the diffusion rate of monatomic hydrogen that may have been trapped in the weld during solidification.

As an alternative to preheat, the ambient temperature temperbead welding process utilizes the tempering action of the welding procedure to produce tough and ductile microstructures. Because precision bead placement and heat input control are utilized in the machine GTAW process, effective tempering of weld heat affected zones (HAZ) is possible without applying preheat. According to Section 2-1 of EPRI Report GC-111050, "the temperbead process is carefully designed and controlled such that successive weld beads supply the appropriate quantity of heat to the untempered HAZ such that the desired degree of carbide precipitation (tempering) is achieved. The resulting microstructure is very tough and ductile."

The IWA-4630 temperbead process includes a post-weld soak requirement. Performed at 450°F - 550°F for 4 hours (P-No. 3 base materials), this post-weld soak assists diffusion of any remaining hydrogen from the repair weld. As such, the post-weld soak is a hydrogen bake-out and not a post-weld heat treatment as defined by the ASME Code. At 450°F - 550°F, the post-weld soak does not stress relieve, temper, or alter the mechanical properties of the weldment in any manner.

The alternative described in Attachment 3 establishes detailed welding procedure qualification requirements for base materials, filler metals, restraint, impact properties, and other procedure variables. The qualification requirements contained in Attachment 3 provide assurance that the mechanical properties of repair welds will be equivalent to or superior to those of the surrounding base material.

- Hydrogen Cracking

Hydrogen cracking is a form of cold cracking. It is produced by the action of internal tensile stresses acting on low toughness HAZs. The internal stresses are produced from localized build-ups of monatomic hydrogen. Monatomic hydrogen forms when moisture or hydrocarbons interact with the welding arc and molten weld pool. The monatomic hydrogen can be entrapped during weld solidification and tends to migrate to transformation boundaries or other microstructure defect locations. As concentrations build, the monatomic hydrogen will recombine to form molecular hydrogen, thus generating localized internal stresses at these internal defect locations. If these stresses exceed the fracture toughness of the material, hydrogen-induced cracking will occur. This form of cracking requires the presence of hydrogen and low toughness materials. It is manifested by intergranular cracking of susceptible materials and normally occurs within 48 hours of welding.

Subsection IWA-4600 establishes elevated preheat and post-weld soak requirements. The elevated preheat temperature of 300°F increases the diffusion rate of hydrogen from the weld. The post-weld soak at 450°F - 550°F was also established to bake-out or facilitate diffusion of any remaining hydrogen from the weldment. However, while hydrogen cracking is a concern for shielded metal arc welding (SMAW), which uses

flux covered electrodes, the potential for hydrogen cracking is significantly reduced when using the machine GTAW process.

The machine GTAW process is inherently free of hydrogen. Unlike the filler metal used in the SMAW process, GTAW filler metals do not rely on flux coverings, which may be susceptible to moisture absorption from the environment. Conversely, the GTAW process utilizes dry inert shielding gases that cover the molten weld pool from oxidizing atmospheres. Any moisture on the surface of the component being welded will be vaporized ahead of the welding torch. The vapor is prevented from being mixed with the molten weld pool by the inert shielding gas that blows the vapor away before it can be mixed. Furthermore, modern filler metal manufacturers produce wires having very low residual hydrogen. This is important because filler metals and base materials are the most realistic sources of hydrogen for automatic or machine GTAW temperbead welding. Therefore, the potential for hydrogen-induced cracking is greatly reduced by using the machine GTAW process.

In the unlikely event that hydrogen cracking occurs, nondestructive examination (NDE) of the weldment will be not be performed until at least 48 hours after completing the third layer of the weld overlay, thereby providing assurance that the cracking would be identified. See paragraphs 3.e and 3.f below for additional information.

- Cold Restraint Cracking

  Cold cracking generally occurs during cooling at temperatures approaching ambient temperature. As stresses build under a high degree of restraint, cracking may occur at defect locations. Brittle microstructures with low ductility are subject to cold restraint cracking. However, the ambient temperature temperbead process is designed to provide a sufficient heat inventory so as to produce the desired tempering for high toughness. Because the machine GTAW temperbead process provides precision bead placement and control of heat, the toughness and ductility of the HAZ will typically be superior to the base material. Therefore, the resulting structure will be appropriately tempered to exhibit toughness sufficient to resist cold cracking.

b. Exceptions to ASME Code Case N-638-1 Conditions

The ambient temperature temperbead technique of Code Case N-638-1 was conditionally approved by the NRC in Regulatory Guide 1.147. The proposed ambient temperature temperbead welding technique of Attachment 3 is identical to Code Case N-638-1 with the following exceptions:

- Code Case N-638-1, paragraph 1.0(a) limits the maximum area of an individual weld to 100 square inches. The proposed alternative limits the surface area to 500 square inches. The technical basis for this change is provided in Attachment 5.

- Code Case N-638-1, paragraph 1.0(a) states that "the depth of the weld shall not be greater than one-half of the ferritic base metal thickness." Because the proposed alternative applies to deposition of weld overlays for which there are no weld or base material excavations, this limitation does not apply and is not included in Attachment 3.

- When welding is to be performed in a pressurized environment (e.g., an enclosed environment that is pressurized to prevent leakage so that welding can be performed), Code Case N-638-1, paragraph 2.1(b) requires that the pressurized environment be duplicated in the procedure qualification test assembly. Because this condition does not exist when applying weld overlays, this requirement is not included in Attachment 3.

- Code Case N-638-1, paragraph 2.1(h) requires the performance of Charpy V-notch testing of the ferritic weld metal of the procedure qualification test coupon. Because austenitic weld metal (i.e., Inconel Alloy 52M) will be used to fabricate the proposed weld overlays, this requirement does not apply and is not included in Attachment 3.

- Code Case N-638-1, paragraph 2.1(j) specifies acceptance criteria for Charpy V-notch tests of the HAZ. According to paragraph 2.1(j), the "average values of the three HAZ impact tests shall be equal to or greater than the average values of the three unaffected base metal tests." Although not explicitly stated, the average values referred to in paragraph 2.1(j) are the *average lateral expansion values* of the HAZ and base material specimens. Because this is the case, the acceptance criteria for Charpy V-notch testing of the HAZ is also based on *average lateral expansion values* in the proposed alternative. The technical basis for this change is provided in Attachment 5.

- Code Case N-638-1, paragraph 3.0(c) requires the deposition and removal of at least one weld reinforcement layer for "similar materials" (i.e., ferritic materials). This requirement is only applicable when welding is performed using ferritic filler weld metal. When temperbead welding is performed with ferritic filler metal, each ferritic weld layer must be tempered by the heat supplied from a subsequent weld layer. Because the final layer of a completed weld or weld repair would be untempered, paragraph 3.0(c) requires the deposition and removal of an additional layer (weld reinforcement) to ensure that the final layer of the completed weld is tempered. Since only austenitic filler metal (i.e., Alloy 52M) will be used to fabricate the proposed weld overlays, depositing and removing a weld reinforcement layer is not required. Therefore, this requirement is not included into Attachment 3.

- Because Code Case N-638-1, paragraph 3.0 does not specifically address monitoring or verification of welding interpass temperatures, interpass temperature controls have been specified in Attachment 3. The proposed interpass temperature controls are based on field experience with depositing weld overlays. Interpass temperature beyond the third layer has no impact on the metallurgical properties of the low alloy steel HAZ.

- As an alternative to the examination requirements of Section 4.0 of Code Case N-638-1, the weld overlay will be examined in accordance with the examination requirements of Attachment 2, Section 3.0. The suitability of the proposed examinations is described in paragraph 3, below.

3. Suitability of Proposed NDE

The length, surface finish, and flatness requirements will be specified in the weld overlay design to provide for inspection of the examination volumes shown in Attachment 2, Figures 1 and 2. Furthermore, the examinations and inspections specified in this proposed alternative will provide adequate assurance of structural integrity for the following reasons:

a. Weld overlays have been used for repair and mitigation of cracking in BWRs since the early 1980s. In Generic Letter (GL) 88-01, *NRC Position on Intergranular Stress Corrosion Cracking (IGSCC) in BWR Austenitic Stainless Steel Piping*, the NRC approved the use of ASME Section XI acceptance standards for determining the acceptability of installed weld overlays.

b. The ultrasonic examinations performed in accordance with the proposed alternative are in accordance with ASME Section XI, Appendix VIII, Supplement 11 as implemented through the PDI. These examinations are considered more sensitive for detecting fabrication and service-induced flaws than the ASME Section III radiographic or ultrasonic examination methods. Furthermore, construction-type flaws have been included in the PDI qualification sample sets for evaluating procedures and personnel.

c. Per Section 3.0(a)(3) of Attachment 2, any planar flaws found during either the acceptance or preservice examination are required to meet the requirements of Table IWB-3514-2. This approach was previously determined to be acceptable in the NRC Safety Evaluation Report (SER) dated July 21, 2004 for Three Mile Island, Unit 1. However, within the same SER, the NRC had issues regarding the application of Table IWB-3514-3 to laminar flaws in a weld overlay. The SER stated, "Applying Table IWB-3514-3 to a weld overlay exposes several inherent oversights. For instance, the acceptance of a laminar flaw size is independent of the weld overlay size, and the acceptance criteria are silent on the inaccessible volume beneath the lamination which may hide other flaws beneath the lamination." These issues are addressed, as follows:

   - Per Section 3.0(a)(3)(i) of Attachment 2, Table IWB-3514-3 has been restricted so that the total laminar flaw shall not exceed 10% of the weld surface area and no linear dimension of the laminar flaw shall exceed 3 inches.

   - Per Section 3.0(a)(3)(ii) of Attachment 2, the reduction in coverage due to laminar flaws shall be less than 10%. The dimensions of the un-inspectable volume are based on the coverage obtained by angle beam examinations of the weld overlay.

- Per Section 3.0(a)(3)(iii) of Attachment 2, any un-inspectable volume in the weld overlay shall be assumed to contain the largest radial planar flaw that could exist within that volume. This assumed flaw shall meet the inservice examination standards of Table IWB-3514-2. Alternately, the assumed flaw shall be evaluated and meet the requirements of Subsection IWB-3640. Both axial and circumferential planar flaws shall be assumed.

d. Weld overlays for repair of cracks in piping are not addressed by ASME Section III. ASME Section III utilizes NDE procedures and techniques with flaw detection capabilities that are well within the practical limits of workmanship standards for welds. These standards are most applicable to volumetric examinations conducted by radiographic examination. Radiography (RT) of weld overlays is not appropriate because of the potential for radioactive material in the RCS and water in piping and components. Section III acceptance standards are written for a range of fabrication flaws including lack of fusion, incomplete penetration, cracking, slag inclusions, porosity, and concavity. However, experience and fracture mechanics have demonstrated that many of the flaws that are rejected using Section III acceptance standards do not have a significant effect on the structural integrity of the component. Furthermore, utilizing ASME Section III acceptance standards on weld overlays would be inconsistent with years of NRC precedence and is without justification given the evidence of past NRC approvals and operating experience.

e. Regarding hydrogen cracking concerns, NDE required by paragraphs 3.0(a)(2) and 3.0(a)(3) of Attachment 2 is more than capable of detecting hydrogen cracking in ferritic materials. First of all, if hydrogen cracking were to occur, it would occur in the HAZ of the ferritic base material either below or immediately adjacent to the weld overlay. Therefore, it is unnecessary to examine the entire 1.5T band defined in paragraph 1.0(e) of Attachment 3. Hydrogen cracking is not a concern in austenitic materials. If it occurs in the ferritic base material below the weld overlay, it will be detected by the ultrasonic examination which will interrogate the entire weld overlay including the interface and HAZ beneath the weld overlay. If it occurs in the ferritic base material immediately adjacent to the weld overlay, it will be detected by the liquid penetrant examination which is performed at least ½ inch on each side of the weld overlay. Finally, when ambient temperature temperbead welding is performed over ferritic materials, the liquid penetrant and ultrasonic examinations will not be performed until at least 48 hours after completion of the third layer of the weld overlay. Technical justification for initiating the 48 hour hold after completion the third layer is provided in paragraph 3.f below.

f. Based on Code Case N-740, the 48-hour hold for performing NDE starts after the weld overlay cools to ambient temperature when performing ambient temperature temperbead welding. This 48-hour hold is specified to allow sufficient time for hydrogen cracking to occur (if it is to occur) in the HAZ of ferritic materials prior to performing final NDE. However, based on extensive research and industry experience, EPRI has provided a technical basis for starting the 48-hour hold after completing the third temperbead weld layer rather than waiting for the weld overlay to cool to ambient temperature (weld

layers beyond the third layer are not designed to provide tempering to the ferritic HAZ when performing ambient temperature temperbead welding). EPRI has documented their technical basis in technical report 1013558, *Temperbead Welding Applications – 48 Hour Hold Requirements for Ambient Temperature Temperbead Welding* (Reference 8). The technical data provided by EPRI in their report is based on testing performed on SA-508, Class 2 low alloy steels and other P-Number 3, Group 3 materials. This point is important because the JAF RPV N-2C nozzle was manufactured from SA-508, Class 2 steel. After evaluating the issues relevant to hydrogen cracking such as microstructure of susceptible materials, availability of hydrogen, applied stresses, temperature, and diffusivity and solubility of hydrogen in steels, EPRI concluded the following on page 5-2 of the report: "There appears to be no technical basis for waiting 48 hours after cooling to ambient temperature before beginning the NDE of the completed weld. There should be no hydrogen present, and even if it were present, the temperbead welded component should be very tolerant of the moisture." Page 5-2 of the report also notes that over 20 weld overlays and 100 repairs have been performed using temperbead techniques on low alloy steel components over the last 20 years. During this time, there has never been an indication of hydrogen cracking by the nondestructive examination performed after the 48 hour hold or by subsequent inservice inspection.

In addition, the ASME Section XI Committee approved Revision 4 to Code Case N-638 (i.e., N-638-4) in October 2006 to allow the 48-hour hold to begin after completing the third weld layer when using austenitic filler metals. Paragraph 4(a)(2) of the code case states in part: "When austenitic materials are used, the weld shall be nondestructively examined after the three tempering layers (i.e., layers 1, 2, and 3) have been in place for at least 48 hours." The ASME Section XI technical basis for this change is documented in the white paper contained in ASME C&S Connect for Code Case N-638-4. The ASME white paper points out that introducing hydrogen to the ferritic HAZ is limited to the first weld layer since this is the only weld layer that makes contact with the ferritic base material. While the potential for introducing hydrogen to the ferritic HAZ is negligible during subsequent weld layers, these layers provide a heat source that accelerates the dissipation of hydrogen from the ferritic HAZ in non-water backed applications. Furthermore, the solubility of hydrogen in austenitic materials such as Alloy 52M is much higher than that of ferritic materials, while the diffusivity of hydrogen in austenitic materials is lower than that of ferritic materials. As a result, hydrogen in the ferritic HAZ tends to diffuse into the austenitic weld metal which has a much higher solubility for hydrogen. This diffusion process is enhanced by heat supplied in subsequent weld layers. Like the EPRI report, the ASME white paper concludes that there is sufficient delay time to facilitate detecting potential hydrogen cracking when NDE is performed 48 hours after completing the third weld layer.

g. The successive examination requirements of Attachment 2, paragraph 3.0(c) ensure that cracks identified by inservice inspections are appropriately monitored. According to paragraph 3.0(c) of Attachment 2, the weld overlay "shall be reexamined during the first or second refueling outage following discovery of the growth or new cracking." If additional crack growth or a new

crack is discovered during a successive examination, then the successive examination of the weld overlay would be re-performed within the next two refueling outages. However, if the successive examination of the weld overlay reveals no additional indication of crack growth or new cracking, the weld overlay shall be placed into a population to be examined on a sample basis. Twenty-five percent (25%) of this population shall be examined once every ten (10) years. This successive examination schedule is identical to that specified in paragraph Q-4300 of ASME Section XI, Appendix Q which has been imposed as a condition to using Code Case N-504-3 by the NRC in RG 1.147.

h. The examination and inspection requirements in Attachment 2, Section 3.0 are equivalent to or more conservative than the examination and inspection requirements of Appendix Q of ASME Section XI as demonstrated in the comparison provided in Attachment 4 of this request.

i. The EPRI Performance Demonstration Initiative (PDI) qualification program for full structural weld overlays does not comply with all provisions of Appendix VIII, Supplement 11 (of ASME Section XI) as endorsed by the NRC in 10CFR50.55. However, JAF addressed this issued under Relief Request RR-5 which was approved by the NRC in an SER dated March 13, 2008.

4. NRC Submittals

As listed in Enclosure 2, Entergy will submit the following information to the NRC within fourteen (14) days from completing the final ultrasonic examinations of the completed weld overlays:

- Weld overlay examination results including a listing of indications detected[2]
- Disposition of indications using the standards of ASME Section XI, Subsection IWB-3514-2 and/or IWB-3514-3 criteria and, if possible, the type and nature of the indications[3]
- A discussion of any repairs to the weld overlay material and/or base metal and the reason for the repairs.

Entergy will also submit to the NRC a stress analysis summary demonstrating that the N-2C nozzle to safe-end DMW will perform its intended design function after weld overlay installation. The stress analysis report will include results showing that the requirements of NB-3200 and NB-3600 of the ASME Code, Section III are satisfied. The stress analysis will also include results showing that the requirements of Subsection IWB-3000 of the ASME Code, Section XI, are

[2] The recording criteria of the ultrasonic examination procedure to be used for the weld overlay examination requires that all indications, regardless of amplitude, be investigated to the extent necessary to provide accurate characterization, identity, and location. Additionally, the procedure requires that all indications, regardless of amplitude, that cannot be clearly attributed to the geometry of the overlay configuration be considered flaw indications.

[3] The ultrasonic examination procedure requires that all suspected flaw indications are to be plotted on a cross-sectional drawing of the weld and that the plots should accurately identify the specific origin of the reflector.

satisfied. The results will show that the postulated crack including its growth in the nozzles will not adversely affect the integrity of the overlaid welds. This information will be submitted to the NRC within 60 days of completing JAF's refueling outage R-18.

5. Precedents

The proposed repair activity is consistent with repair activities that have been approved by the NRC for other plants. By letter dated April 6, 2007 NRC approved "Arkansas Nuclear One, Unit-1 Request for Alternative ANO1-R&R-010 to Use Proposed Alternative to the American Society of Mechanical Engineers Boiler and Pressure Vessel Code Requirements for Pressurizer Nozzle Weld Overlay Repairs (TAC No. MD4019)", by letter dated March 17, 2008 NRC approved "Arkansas Nuclear One, Unit No. 2 (ANO-2) – Approval of relief Request for Alternative ANO2-R&R-005 to Install Weld Overlays on Hot Leg Dissimilar Metal Welds (TAC No. MD4907)", and by letter dated June 16, 2008 NRC approved "Arkansas Nuclear One, Unit No. 1 - Approval Of Relief Request ANO-1 R&R-011 To Use A Proposed Alternative To The American Society Of Mechanical Engineers Boiler And Pressure Vessel Code Requirements For Weld Overlay Repairs (TAC NO. MD6958)"

VI. CONCLUSION

10 CFR 50.55a(a)(3) states:

"Proposed alternatives to the requirements of (c), (d), (e), (f), (g), and (h) of this section or portions thereof may be used when authorized by the Director of the Office of Nuclear Reactor Regulation. The applicant shall demonstrate that:

(i) The proposed alternatives would provide an acceptable level of quality and safety, or

(ii) Compliance with the specified requirements of this section would result in hardship or unusual difficulty without a compensating increase in the level of quality and safety."

Entergy believes that the proposed alternatives of this request provide an acceptable level of quality and safety. The proposed weld overlay will be installed using Nickel Alloy 52M filler metal that is resistant to IGSCC. While this is the case, the weld overlay will also create compressive residual stresses along the inside diameter of the original weld, which prevents the initiation of new IGSCC. Finally, preservice and inservice inspection of the weld overlay will be performed to ensure structural integrity is maintained. Therefore, Entergy requests that the NRC staff authorize the proposed alternative in accordance with 10 CFR 50.55a(a)(3).

VII DURATION OF PROPOSED ALTERNATIVE

The proposed alternative is applicable to the fourth (4th) 10-Year ISI interval for JAF (March 1, 2007 to December 31, 2016) and for the period of extended operation which expires October 17, 2034.

JAFP-08-0099

Attachment 1 to Enclosure 1

Dissimilar Metal Weld Details and Figures

DISSIMILAR METAL WELD DETAILS

Nozzle Description	Nozzle Material	Weld Mat'l ISI No.	Safe End Material	Pipe Size	Nozzle Size	Figure No.
RPV Recirculation Inlet Nozzle N-2C	SA-508, Class 2[1] w/SST Clad	82/182[2] N-2C-SE	SA-182, F304[3]	12" NPS	14 3/8" OD	1

Notes:

1. Nozzle material is P-Number 3, Group 3 low alloy steel.
2. DMW includes butter and weld.
3. Safe-end material is P-Number 8 stainless steel.

FIGURE 1

As Welded Target Thickness is .515"
Min. Design Thickness .410"

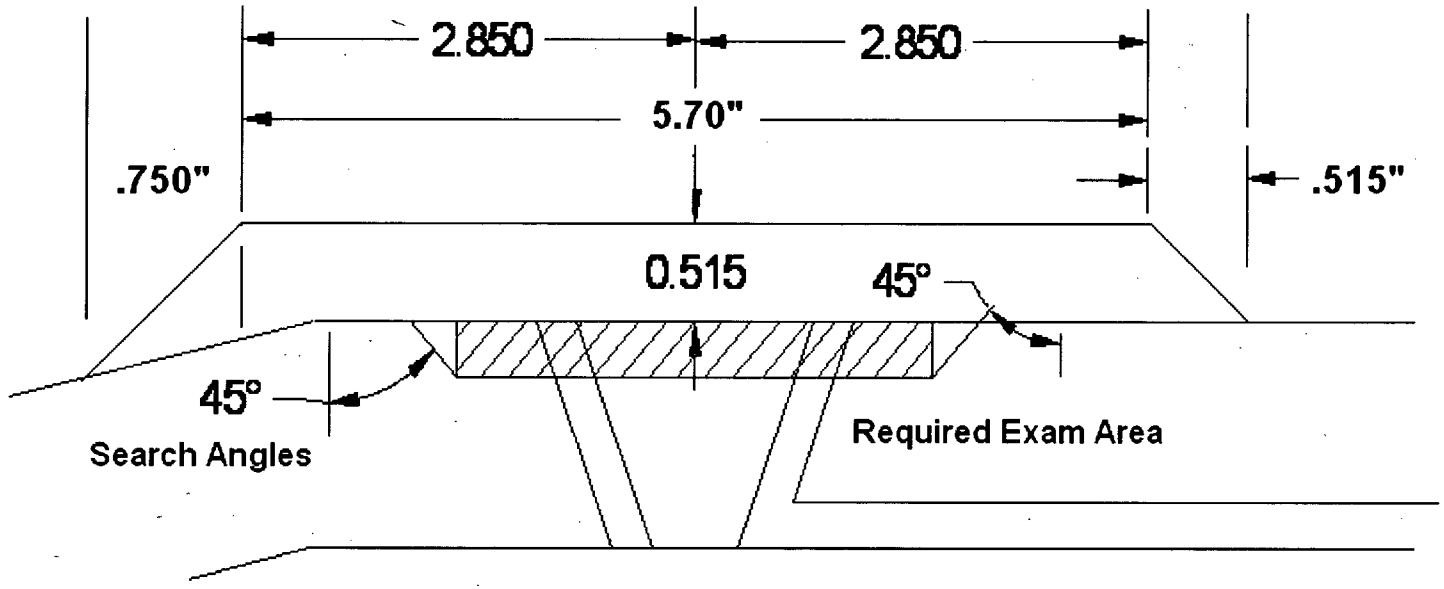

Safe End
SA-182

Nozzle End
SA-508

This figure encompasses the design requirements, thickness and length of the overlay have been increased to accommodate surface finishing and NDE requirement.

JAFP-08-0099

Attachment 2 to Enclosure 1

Proposed Alternative for Full Structural Weld Overlays

PROPOSED ALTERNATIVE FOR FULL STRUCTURAL WELD OVERLAYS

1.0 GENERAL REQUIREMENTS

(a) Weld overlays may be applied to the 82/182 dissimilar metal welds joining the materials listed below.

- P-No. 3, Group 3 low alloy steel to P-No. 8 stainless steel

(b) Weld overlay filler metal shall be austenitic Nickel Alloy 52M (ERNiCrFe-7A) filler metal having a chromium content of at least 28%. The weld overlay is applied 360° around the circumference of the item, and shall be deposited using a Welding Procedure Specification (WPS) for groove welding, qualified in accordance with the Construction Code and Owner's Requirements, and identified in the Repair/Replacement Plan. As an alternative to the post-weld heat treatment requirements of the Construction Code and Owner's requirements, the provisions for "Ambient Temperature Temperbead Welding" may be used on the ferritic nozzle as described in Attachment 3.

(c) Prior to deposition of the weld overlay, the surface to be repaired shall be examined by the liquid penetrant method. Indications larger than 1/16 inch shall be removed, reduced in size, or corrected in accordance with the following requirements.

(1) One or more layers of weld metal (GTAW or SMAW) shall be applied to seal unacceptable indications in the area to be repaired with or without excavation. The thickness of these layers shall not be used in meeting weld reinforcement design thickness requirements. Peening the unacceptable indication prior to welding is permitted.

(2) If correcting indications identified in 1.0(c) is required, the area where the weld overlay is to be deposited, including any local repairs or initial weld overlay layer, shall be examined by the liquid penetrant method. The area shall contain no indications greater than 1/16 inch prior to applying the structural layers of the weld overlay.

(d) Weld overlay deposits shall meet the following requirements:

The austenitic nickel alloy weld overlay shall consist of at least two weld layers deposited with a filler material such as identified in 1.0(b) above. The first layer of weld metal deposited may not be credited toward the required thickness. Alternatively, a diluted layer may be credited toward the required thickness, provided the portion of the layer over the austenitic base material, austenitic weld, and the associated dilution zone from an adjacent ferritic base material contains at least 20% chromium. The chromium content of the deposited weld metal may be determined by chemical analysis of the production weld or from a representative coupon taken from a mockup prepared in accordance with the WPS (or a representative WPS) for the production weld.

(e) A new weld overlay shall not be installed on top of an existing weld overlay that has been in service.

2.0 CRACK GROWTH CONSIDERATIONS AND DESIGN

(a) Crack Growth

(1) Flaw characterization and evaluation requirements shall be based on the as-found flaw. However, the size of all flaws shall be projected to the end of the design life of the overlay. Crack growth, including both stress corrosion and fatigue crack growth, shall be evaluated in the materials in accordance with IWB-3640. If the flaw is at or near the boundary of two different materials, evaluation of flaw growth in both materials is required.

(2) The size of all flaws detected shall be used to define the life of the weld overlay. In no case shall the inspection interval be longer than the life of the weld overlay.

(b) Structural Design

The design of the weld overlay shall be analyzed and shown to satisfy the following, using the assumptions and flaw characterization restrictions in 2.0(a). The following design analysis shall be completed in accordance with IWA-4311.

(1) The axial length and end slope of the weld overlay shall cover the weld and the heat affected zones (HAZs) on each side of the weld, and shall provide for load redistribution from the item into the weld overlay and back into the item without violating applicable stress limits of NB-3200. Any laminar flaws in the weld overlay shall be evaluated in the analysis to ensure that load redistribution complies with the above. These requirements will usually be satisfied if the weld overlay full thickness length extends axially beyond the projected flaw by at least $0.75\sqrt{Rt}$, where "R" is the outer radius of the item and "t" is the nominal wall thickness of the item.

(2) Unless specifically analyzed in accordance with 2.0(b)(1) above, the end transition slope of the overlay shall not exceed 45°. A slope of not more than 1:3 is recommended.

(3) For determining the combined length of circumferentially oriented flaws in the underlying base material or weld, multiple flaws shall be treated as one flaw of length equal to the sum of the lengths of the individual flaws characterized in accordance with IWA-3300.

(4) For circumferentially oriented flaws, if the combined length is greater than 10% of the items circumference, the flaws shall be assumed to be 100% through the original wall thickness of the item for the entire circumference of the item. If the combined length of circumferentially oriented flaws does not exceed 10% of the item's circumference, the flaws shall be assumed to be 100% through the original wall thickness of the item for a circumferential length equal to the combined lengths of the flaws.

(5) For axial flaws 1.5" or longer, or for five or more flaws of any length, the flaws shall be assumed to be 100% through the original wall thickness of the item for the entire axial length of the flaw or combined flaws, as applicable.

(6) The overlay design thickness of items meeting 2.0(b)(4) or (5) above shall be based on the measured diameter using only the weld overlay thickness conforming to the deposit analysis requirements of 1.0(d) above. The combined wall thickness at the weld overlay, any planar flaws in the weld overlay, and the effects of any discontinuity (e.g., another weld overlay or reinforcement for a branch connection) within a distance of $2.5\sqrt{Rt}$ from the toes of the weld overlay, shall be evaluated and shall meet the requirements of IWB-3640.

Note: Although planar flaws are considered in the IWB-3640 evaluation of the combined wall thickness in paragraph 2.0(b)(4), these planar flaws must meet the acceptance standards of IWB-3500 as required by paragraphs 3.0(a) and (b) of this attachment.

(7) The effects of any changes in applied loads, as a result of weld shrinkage from the entire overlay, on other items in the piping system (e.g., support loads and clearances, nozzle loads, changes in system flexibility and weight due to the weld overlay) shall be evaluated. Existing flaws previously accepted by analytical evaluation shall be evaluated in accordance with IWB-3640.

3.0 EXAMINATION AND INSPECTION

In lieu of all other examination requirements, the examination requirements proposed herein shall be met. Nondestructive examination (NDE) methods shall be in accordance with IWA-2200, except as specified herein. NDE personnel shall be qualified in accordance with IWA-2300. Ultrasonic examination procedures and personnel shall be qualified in accordance with Appendix VIII of ASME Section XI.

(a) Acceptance Examination

(1) The weld overlay shall have a surface finish of 250 micro-inch (6.3 micrometers) RMS or better and a flatness that is sufficient to allow for adequate examination in accordance with procedures qualified per Appendix VIII. The weld overlay shall be examined to verify acceptable configuration.

(2) The weld overlay and the adjacent base material for at least ½ inch from each side of the weld shall be examined using the liquid penetrant method. The weld overlay shall satisfy the surface examination acceptance criteria for welds of the Construction Code or ASME Section III, NB-5300. The adjacent base metal shall satisfy the surface examination acceptance criteria for base material of the Construction Code or ASME Section III, NB-2500. If ambient temperature temperbead welding is used, liquid penetrant examination shall be conducted at least 48 hours after completing the third layer of the weld overlay.

(3) The examination volume A-B-C-D in Figure 1 (below) shall be ultrasonically examined to assure adequate fusion (i.e., adequate bond) with the base metal and to detect welding flaws, such as inter-bead lack of fusion, inclusions, or

cracks. The interface C-D shown between the overlay and the weld includes the bond and the HAZ from the overlay. If ambient temperature temperbead welding is used, the ultrasonic examination shall be conducted at least 48 hours after completing the third layer of the weld overlay. Planar flaws shall meet the preservice examination standards of Table IWB-3514-2. In applying the acceptance standards, wall thickness "t_w" shall be the thickness of the weld overlay. Laminar flaws shall meet the following:

(i) Laminar flaws shall meet the acceptance standards of Table IWB-3514-3 with the additional limitation that the total laminar flaw shall not exceed 10% of the weld surface area and that no linear dimension of the laminar flaw area exceeds 3.0 inches.

(ii) The reduction in coverage of the examination volume in Figure 2 due to laminar flaws shall be less than 10%. The dimensions of the un-inspectable volume are dependent on the coverage achieved with the angle beam examination of the overlay.

(iii) Any un-inspectable volume in the weld overlay shall be assumed to contain the largest radial planar flaw that could exist within that volume. This assumed flaw shall meet the inservice examination standards of Table IWB-3514-2. Alternately, the assumed flaw shall be evaluated and shall meet the requirements of IWB-3640. Both axial and circumferential planar flaws shall be assumed.

(4) If a weld overlay does not meet the acceptance standards specified in 3.0(a)(2) and (3) above, the weld overlay shall be corrected by a repair/replacement activity in accordance with IWA-4000.

(5) After completing welding activities, affected restraints, supports, and snubbers shall be VT-3 visually examined to verify that design tolerances are met.

(b) <u>Preservice Inspection</u>

(1) The examination volume A-B-C-D in Figure 2 (below) shall be ultrasonically examined. The angle beam shall be directed perpendicular and parallel to the piping axis, with scanning performed in four directions to locate and size any cracks that might have propagated into the upper 25% of the base material or into the weld overlay. If ambient temperature temperbead welding is used, the ultrasonic examination shall be conducted at least 48 hours after completing the third layer of the weld overlay.

(2) The preservice examination acceptance standards of Table IWB-3514-2 shall be met for the weld overlay. In applying the acceptance standards, wall thickness, t_w, shall be the thickness of the weld overlay. Cracks in the outer 25% of the base metal shall meet the design analysis requirements of 2.0 above.

(c) Inservice Inspection

(1) The weld overlay examination volume A-B-C-D in Figure 2 shall be added to the inspection plan and shall be ultrasonically examined during the first or second refueling outage following application.

(2) The weld overlay examination volume in Figure 2 shall be ultrasonically examined to determine if any new or existing cracks have propagated into the upper 25% of the base material or into the overlay. The angle beam shall be directed perpendicular and parallel to the piping axis, with scanning performed in four directions.

(3) The acceptance standards for the ultrasonic examination of the weld overlay are specified in Table IWB-3514-2. However, if the weld overlay fails to meet the acceptance standards of Table IWB-3514-2, it can be accepted based on an analytical evaluation meeting the requirements and acceptance criteria of IWB-3600. However, flaws identified as intergranular stress corrosion cracking (IGSCC) cannot be accepted by an IWB-3600 analytical evaluation. Cracks in the outer 25% of the base metal shall meet the design analysis requirements of 2.0 above.

(4) Weld overlay examination volumes that show no indication of crack growth or new cracking shall be placed into a population to be examined on a sample basis. Twenty-five percent of this population shall be examined once every ten years, except as required in paragraph 2.0(a)(2) of this attachment.

(5) If inservice examinations reveal crack growth, or new cracking, meeting the acceptance standards, the weld overlay examination volume shall be reexamined during the first or second refueling outage following discovery of the growth or new cracking. Weld overlay examination volumes that show no additional indication of crack growth or new cracking shall be examined in accordance with paragraph 3.0(c)(4).

(6) For weld overlay examination volumes that fail to meet the acceptance criteria as described in 3.0(c)(3) above, the weld overlay shall be removed, including the original defective weld, and the item shall be corrected by a repair/replacement activity in accordance with IWA-4000.

(d) Additional Examinations

If inservice examinations reveal an unacceptable indication, crack growth into the weld overlay design thickness, or axial crack growth beyond the specified examination volume, additional weld overlay examination volumes, equal to the number scheduled for the current inspection period, shall be examined prior to return to service. If additional unacceptable indications are found in the second sample, 50% of the total population of weld overlay examination volumes shall be examined prior to operation. If additional unacceptable indications are found, the entire remaining population of weld overlay examination volumes shall be examined prior to return to service.

4.0 PRESSURE TESTING

A system leakage test and VT-2 shall be performed in accordance with IWA-5000.

5.0 DOCUMENTATION

Use of this alternative shall be documented on Form NIS-2. Alternatively, it may be documented on Form NIS-2A based on appropriate NRC approval.

FIGURE 1

ACCEPTANCE EXAMINATION VOLUME

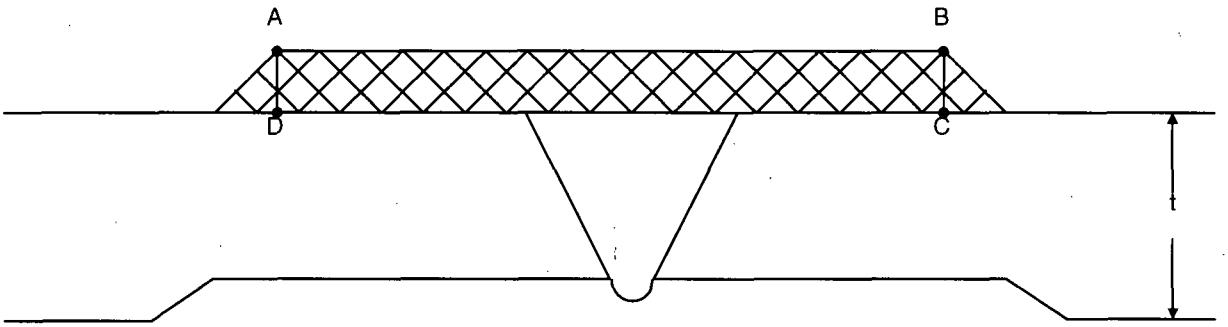

Examination Volume A-B-C-D

FIGURE 2

PRESERVICE AND INSERVICE EXAMINATION VOLUME

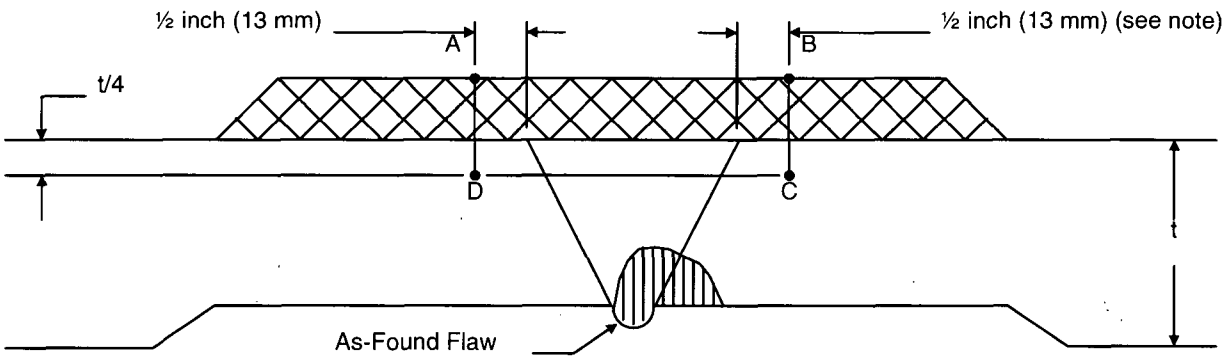

Examination Volume A-B-C-D

NOTE

For axial or circumferential flaws, the axial extent of the examination volume shall extend at least ½ inch (13 mm) beyond the as-found flaw and at least ½ inch beyond the toes of the original weld, including weld end butter, where applied.

JAFP-08-0099

Attachment 3 to Enclosure 1

Proposed Ambient Temperature Temperbead Technique

PROPOSED AMBIENT TEMPERATURE TEMPERBEAD TECHNIQUE

1.0 GENERAL REQUIREMENTS

(a) This appendix applies to dissimilar austenitic filler metal welds joining P-No. 8 material to P-No. 3 material.

(b) The maximum area of an individual weld overlay based on the finished surface over the ferritic base material shall be 500 square inches.

(c) Repair/replacement activities on a dissimilar-metal weld in accordance with this attachment are limited to those along the fusion line of a nonferritic weld to ferritic base material on which 1/8 inch, or less of nonferritic weld deposit exists above the original fusion line.

(d) If a defect penetrates into the ferritic base material, repair of the base material, using a nonferritic weld filler material, may be performed in accordance with this attachment, provided the depth of repair in the base material does not exceed 3/8 inch.

(e) Prior to welding the area to be welded and a band around the area of at least 1½ times the component thickness or 5 inches, whichever is less, shall be at least 50°F (10°C).

(f) Welding materials shall meet the Owner's Requirements and the Construction Code and Cases specified in the Repair/Replacement Plan. Welding materials shall be controlled so that they are identified as acceptable until consumed.

(g) Peening may be used, except on the initial and final layers.

2.0 WELDING QUALIFICATIONS

2.1 Procedure Qualification

(a) The base materials for the welding procedure qualification shall be of the same P-Number and Group Number, as the materials to be welded. The materials shall be post-weld heat treated to at least the time and temperature that was applied to the materials being welded.

(b) Consideration shall be given to the effects of irradiation on the properties of material, including weld material for applications in the core beltline region of the reactor vessel. Special material requirements in the Design Specification shall also apply to the test assembly materials for these applications.

(c) The root width and included angle of the cavity in the test assembly shall be no greater than the minimum specified for the repair.

(d) The maximum interpass temperature for the first three layers of the test assembly shall be 150°F.

(e) The test assembly cavity depth shall be at least 1 inch. The test assembly thickness shall be at least twice the test assembly cavity depth. The test assembly shall be large enough to permit removing the required test specimens. The test assembly dimensions surrounding the cavity shall be at least the test assembly thickness and at least 6 inches. The qualification test plate shall be prepared in accordance with Figure 1-1.

(f) Ferritic base material for the procedure qualification test shall meet the impact test requirements of the Construction Code and Owner's Requirements. If such requirements are not in the Construction Code and Owner's Requirements, the impact properties shall be determined by Charpy V-notch impact tests of the procedure qualification base material at or below the lowest service temperature of the item to be repaired. The location and orientation of the test specimens shall be similar to those required in (g) below, but shall be in the base metal.

(g) Charpy V-notch tests of the ferritic heat-affected zone (HAZ) shall be performed at the same temperature as the base metal test of (f) above. Number, location, and orientation of test specimens shall be as follows:

(1) The specimens shall be removed from a location as near as practical to a depth of one-half the thickness of the deposited weld metal. The coupons for HAZ impact specimens shall be taken transverse to the axis of the weld and etched to define the HAZ. The notch of the Charpy V-notch specimen shall be cut approximately normal to the material surface in such a manner as to include as much HAZ as possible in the resulting fracture. Where the material thickness permits, the axis of a specimen shall be inclined to allow the root of the notch to be aligned parallel to the fusion line.

(2) If the test material is in the form of a plate or a forging, the axis of the weld shall be oriented parallel to the principal direction of rolling or forging.

(3) The Charpy V-notch test shall be performed in accordance with SA-370. Specimens shall be in accordance with SA-370, Figure 11, Type A. The test shall consist of a set of three full-size 10 mm X 10 mm specimens. The lateral expansion, percent shear, absorbed energy, test temperature, orientation and location of all test specimens shall be reported in the Procedure Qualification Record.

(h) The average lateral expansion value of the three HAZ Charpy V-notch specimens shall be equal to or greater than the average lateral expansion value of the three unaffected base metal specimens.

2.2 Performance Qualification

Welding operators shall be qualified in accordance with ASME Section IX.

3.0 WELDING PROCEDURE REQUIREMENTS

The welding procedure shall include the following requirements.

(a) The weld metal shall be deposited by the automatic or machine gas tungsten arc welding (GTAW) process.

(b) Dissimilar metal welds shall be made using F-No. 43 weld metal (QW-432) for P-No. 8 to P-No. 3 weld joints.

(c) The area to be welded shall be buttered with a deposit of at least three layers to achieve at least 1/8 inch overlay thickness with the heat input for each layer controlled to within ±10% of that used in the procedure qualification test. Particular care shall be taken in the placement of the weld layers of the austenitic overlay filler material at the toe of the overlay to ensure that the HAZ and ferritic base metal are tempered. Subsequent layers shall be deposited with a heat input not exceeding that used for layers beyond the third layer in the procedure qualification.

(d) The maximum interpass temperature for field applications shall be 350°F (180°C) for all weld layers regardless of the interpass temperature used during qualification.

(e) The preheat and interpass temperatures will be measured using a contact pyrometer. In the first three layers, the interpass temperature will be measured every three to five passes. After the first three layers, interpass temperature measurements will be taken every six to ten passes for the subsequent layers. Contact pyrometers will be calibrated in accordance with approved calibration and control program documents.

(f) Particular care shall be given to ensure that the weld region is free of all potential sources of hydrogen. The surfaces to be welded, filler metal, and shielding gas shall be suitably controlled.

FIGURE 1-1

QUALIFICATION TEST PLATE

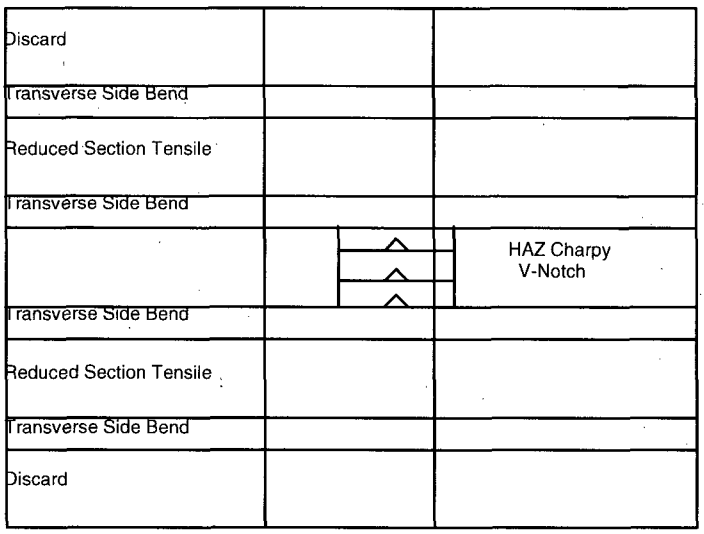

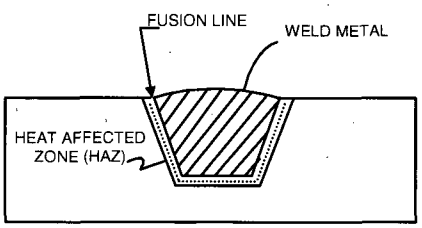

NOTE

Base metal Charpy impact specimens are not shown.

JAFP-08-0099

Attachment 4 to Enclosure 1

Comparison of ASME Code Case N-504-3 and Appendix Q of ASME Section XI with the Proposed Alternative of Attachment 2 for Full Structural Weld Overlays

COMPARISON OF ASME CODE CASE N-504-3 AND APPENDIX Q OF ASME SECTION XI WITH THE PROPOSED ALTERNATIVE OF ATTACHMENT 2 FOR FULL STRUCTURAL WELD OVERLAYS

Code Case N-504-3 and Appendix Q of ASME Section XI	Proposed Alternative of Attachment 2
Code Case N-504-3 provides requirements for reducing a defect to a flaw of acceptable size by deposition of weld reinforcement (weld overlay) on the outside surface of the pipe using austenitic stainless steel filler metal as an alternative to defect removal. Code Case N-504-3 is applicable to austenitic stainless steel piping only. According to Regulatory Guide 1.147, the provisions of Non-mandatory Appendix Q of ASME Section XI must also be met when using this Case. Therefore, the Code Case N-504-3 requirements presented below have been supplemented by Appendix Q of ASME Section XI.	The proposed alternative of Attachment 2 provides requirements for installing a full structural weld overlay by deposition of weld reinforcement (weld overlay) on the outside surface of the item using Nickel Alloy 52M filler metal. Attachment 2 is applicable to dissimilar metal welds associated with ferritic, stainless steel, and nickel alloy materials. It is also applicable to similar metal welds in austenitic stainless steels. The proposed alternative of Attachment 2 is based on Code Case N-740.
General Requirements	**1.0 General Requirements**
Code Case N-504-3 and Appendix Q are only applicable to P-No. 8 austenitic stainless steels.	As specified in paragraph 1.0(a) of Attachment 2, the proposed alternative is applicable to dissimilar metal 82/182 welds joining P-No. 3 to P-No. 8 materials. **Basis**: Code Case N-504-3 and Appendix Q are applicable to austenitic weld overlays of P-No. 8 austenitic stainless steel materials. Based on Code Case N-740, the proposed alternative of Attachment 2 was specifically written to address the application of weld overlays over dissimilar metal welds.
According to paragraph (b) of Code Case N-504-3 as supplemented by Appendix Q, weld overlay filler metal shall be low carbon (0.035% max.) austenitic stainless steel applied 360 degrees around the circumference of the pipe, and shall be deposited using a Welding Procedure Specification for groove welding, qualified in accordance with the Construction Code and Owner's Requirements and identified in the Repair/Replacement Plan. The SAW process is not allowed for weld overlays.	The weld filler metal and procedure requirements of Attachment 2, paragraph 1.0(b) are equivalent to Code Case N-504-3 and Appendix Q except as noted below: • Weld overlay filler metal shall be austenitic Nickel Alloy 52M (ERNiCrFe-7A) filler metal which has a chromium content of at least 28%. • Only the GTAW process is allowed based on reference to ERNiCrFe-7 filler metal. If AMTB welding is performed, GTAW must also be used.

Code Case N-504-3 and Appendix Q of ASME Section XI	Proposed Alternative of Attachment 2
	As an alternative to post-weld heat treatment, the provisions for "Ambient Temperature Temperbead Welding" may be used on the ferritic nozzle as described in Attachment 3. **Basis**: The weld overlay will be deposited with ERNiCrFe-7 (Alloy 52M) filler metal. It has been included into ASME Section IX as F-No. 43 filler metals. Containing 28.0 – 31.5% chromium (roughly twice the chromium content of 82/182 filler metal), this filler metal has excellent resistance to IGSCC. This point has been clearly documented in EPRI Technical Report MRP-115, Section 2.2. Regarding the WPS, paragraph 1.0(b) of Attachment 2 provides clarification that the WPS used for depositing weld overlays must be qualified as a groove welding procedure to ensure that mechanical properties of the WPS are appropriately established. Where welding is performed on ferritic nozzles, an ambient temperature temperbead WPS will be used. Suitability of an ambient temperature temperbead WPS is addressed in Section V.A.2 of this Request. While paragraph 1.0(b) does not specifically prohibit use of the SAW, this process will not be used because it invokes the GTAW process for both temperbead and non-temperbead welding application.
According to paragraph (e) of Code Case N-504-3 as supplemented by Appendix Q, the weld reinforcement shall consist of at least two weld layers having as-deposited delta ferrite content of at least 7.5 FN. The first layer of weld metal with delta ferrite content of at least 7.5 FN shall constitute the first layer of the weld reinforcement that may be credited toward the required thickness. Alternatively, first layers of at least 5 FN provided the carbon content is determined by chemical analysis to be less than 0.02%.	The weld overlay Attachment 2 is deposited using Nickel Alloy 52M filler metal instead of austenitic stainless steel filler metals. Therefore, the basis for crediting the first layer towards the required design thickness will be based on the chromium content of the nickel alloy filler metal. According to paragraph 1.0(d) of Attachment 2, the first layer of Nickel Alloy 52M deposited weld metal may be credited toward the required thickness provided the portion of the layer over the austenitic base material, austenitic weld, and the associated dilution zone from an adjacent ferritic base material contains at least 20% chromium. The chromium content of the deposited weld metal may be determined by chemical analysis of the production weld or from a representative coupon taken from a mockup prepared in accordance with the WPS for the production weld. **Basis**: The weld overlay will be deposited with ERNiCrFe-7 (Alloy 52M) filler metal. Credit for the first weld layer may not be taken toward the required thickness unless it has been shown to contain at least 20% chromium. This is a sufficient amount of chromium to prevent IGSCC.

Code Case N-504-3 and Appendix Q of ASME Section XI	Proposed Alternative of Attachment 2
	Section 2.2 of EPRI Technical Report MRP-115 states the following: "The only well explored effect of the compositional differences among the weld alloys on IGSCC is the influence of chromium. Buisine, et al. evaluated the IGSCC resistance of nickel-based weld metals with various chromium contents ranging from about 15% to 30% chromium. Testing was performed in doped steam and primary water. Alloy 182, with about 14.5% chromium, was the most susceptible. Alloy 82 with 18-20% chromium took three or four times longer to crack. For chromium contents between 21 and 22%, no stress corrosion crack initiation was observed..."
Design and Crack Growth Considerations	**2.0 Design and Crack Growth Considerations**
The design and flaw characterization provisions of Code Case N-504-3, paragraphs (f) and (g) as supplemented by Appendix Q. The supplemental Appendix Q requirements are summarized below: (i) Flaw characterization and evaluation are based on the as-found flaw and as described below. Flaw evaluation of the existing flaws is based on IWB-3640 for the design life. [Ref: Q-3000(a)] • Multiple circumferential flaws shall be treated as one flaw of length equal to the sum of the lengths of the individual flaws characterized in accordance with IWA-3300. • When the combined length of circumferential flaws exceeds 10% of the pipe circumference, the circumferential flaws shall be assumed to be 100% through-wall for the entire circumference of the pipe. • When the combined length of circumferential flaws does not exceed 10% of the circumference, the flaws are only assumed to be 100% through-wall for a circumferential length equal to the combined length of the flaws. • For axial flaws 1.5 inches or longer, or for five or more axial flaws of any length, the flaws shall be assumed to be 100% through-wall for the entire axial length of the flaw and entire	The design and flaw evaluation provisions in the proposed alternative of Attachment 2, Section 2.0 are similar to those in Code Case N-504-3 as supplemented in Appendix Q as briefly noted below: (i) Flaw characterization and evaluation are based on the as-found flaw. However, the size of all flaws shall be projected to the end of the design life of the overlay. Crack growth, including both stress corrosion and fatigue crack growth, shall be evaluated in the materials in accordance with IWB-3640. The size of all flaws detected shall be used to define the life of the weld overlay. In no case shall the inspection interval be longer than the life of the weld overlay. (ii) Design will comply with the following: • The axial length and end slope of the weld overlay shall cover the weld and the HAZs on each side of the weld, and provide for load redistribution from the item into the weld overlay and back into the item without violating applicable stress limits. Any laminar flaws in the weld overlay shall be evaluated in the analysis to ensure that load redistribution complies with the above. • Unless specifically analyzed, the end transition slope of the overlay shall not exceed 45°. A 1:3 is recommended. • The methods and assumptions for combining axial and circumferential flaws are very similar to that specified in Code Case

Code Case N-504-3 and Appendix Q of ASME Section XI	Proposed Alternative of Attachment 2
circumference of the pipe. • For four or fewer axial flaws less than 1.5 inches in length and no circumferential flaws, the weld overlay thickness need only consist of two or more layers of weld metal meeting the deposit analysis requirements. No additional structural reinforcement is required. The axial length of the weld overlay shall cover the weld and HAZs on each side of the weld, and shall extend ½" beyond the ends of observed flaws. provide for load redistribution from the item into the weld overlay and back into the item without violating applicable stress limits of the Construction Code. (ii) The design of the weld overlay shall satisfy the requirements of the Construction Code and Owner's Requirements in accordance with IWA-4221 and the following using the assumptions and flaw characterization restrictions of Q-3000(a). The design analysis shall comply with IWA-4311. [Ref: Q-3000(b)] • The axial length and end slope of the weld overlay shall cover the weld and HAZs on each side of the weld, and provide for load redistribution from the item into the weld overlay and back into the item without violating applicable stress limits of the Construction Code. Any laminar flaws in the weld overlay shall be evaluated in the analysis to ensure that load redistribution complies with the above. These requirements are usually met if the weld overlay extends beyond the projected flaw by at least 0.75 $(Rt)^{1/2}$. • Unless specifically analyzed, the end transition slope of the overlay shall not exceed 45°. A slope of not more than 1:3 is recommended. • The overlay design thickness of items shall be based on the measured diameter, using only the weld overlay thickness as restricted in Q-2000(d). The wall thickness of the weld overlay, any planar flaws in the weld overlay, and	N-504-3 as supplemented by Appendix Q. • The effects of any changes in applied loads, as a result of weld shrinkage from the entire overlay, on other items in the piping system (e.g., support loads and clearances, nozzle loads, changes in system flexibility and weight due to the weld overlay) shall be evaluated. Existing flaws previously accepted by analytical evaluation shall be evaluated in accordance with IWB-3640. **Basis**: Weld overlays are being installed in accordance with Attachment 2 as a repair and to mitigate any future IGSCC issues with the subject welds. As shown above, the design and crack evaluations of Attachment 2, Section 2.0 are very similar and/or equivalent to those of Code Case N-504-3 as supplemented by Appendix Q .

Code Case N-504-3 and Appendix Q of ASME Section XI	Proposed Alternative of Attachment 2
the effects of any discontinuity (e.g., another weld overlay or reinforcement for a branch connection) within a distance of 2.5 $(Rt)^{1/2}$ from the toes of the weld overlay, shall be evaluated and meet the requirements of IWB-, IWC-, or IWD-3640. • The effects of any changes in applied loads, as a result of weld shrinkage or existing flaws previously accepted by analytical evaluation shall be evaluated in accordance with IWB-3640, IWC-3640, or IWD-3640, as applicable.	
Examination and Inspection	**3.0 Examination and Inspection**
Code Case N-504-3 does not include requirements for acceptance examination or inservice examination of weld overlays. Preservice examination is addressed. However, Appendix Q, Article Q-4000 does specify requirements applicable to weld acceptance examinations, preservice examinations, and inservice examinations.	Attachment 2, Section 3.0 of the proposed alternative specifies requirements applicable to weld acceptance examinations, preservice examinations, and inservice examinations.

Code Case N-504-3 and Appendix Q of ASME Section XI	Proposed Alternative of Attachment 2
Acceptance Examination	**3.0(a) Acceptance Examination**
<u>Acceptance Examination</u> Q-4100(c) states that the examination volume in Figure Q-4100-1 shall be ultrasonically examined to assure adequate fusion (i.e., adequate bond) with the base metal and to detect welding flaws, such as inter-bead lack of fusion, inclusions, or cracks. Planar flaws shall meet the preservice examination standards of Table IWB-3514-2. Laminar flaws shall meet the following:	The acceptance standards in paragraph 3.0(a)(3) of Attachment 2 are identical to those of paragraph Q-4100(c) except that paragraph 3.0(a)(3) includes requirements and clarifications that are not included in Appendix Q. First, it specifies that the ultrasonic examination shall be conducted at least 48 hours after completing the third layer of the weld overlay when ambient temperature temperbead welding is used. Secondly, it provides the following clarifications: • The interface C-D between the weld overlay and the weld includes the bond and the HAZ from the weld overlay. • In applying the acceptance standards, wall thickness "t_w" shall be the thickness of the weld overlay. **Basis:** Appendix Q is applicable to austenitic stainless steel materials only; therefore, ambient temperature temperbead welding would not be applicable. It is applicable to welding performed in the proposed alternative. When ambient temperature temperbead welding is performed, nondestructive examinations must be performed at least 48 hours after completing the third layer of the weld overlay to allow sufficient time for hydrogen cracking to occur (if it is to occur). Technical justification for starting the 48 hours after completion of the third layer of the weld overlay is provided in paragraph V.A.3.f of the Request. The other two changes are simply clarifications that were added to ensure that the examination requirements were appropriately performed.
Q-4100(c)(1) states that laminar flaws shall meet the acceptance standards of Table IWB-3514-3.	The acceptance standards in paragraph 3.0(a)(3)(i) of Attachment 2 are identical to paragraph Q-4100(c)(1) except that paragraph 3.0(a)(3)(i) includes the additional limitation that the total laminar flaw shall not exceed 10% of the weld surface area and that no linear dimension of the laminar flaw area exceeds 3 inches. **Basis**: These changes were made to provide additional conservatism to the weld overlay examination and to reduce the size of the un-inspectable volume beneath a laminar flaw. See paragraph V.A.3.c of the Request for

Code Case N-504-3 and Appendix Q of ASME Section XI	Proposed Alternative of Attachment 2
	additional information.
Q-4100(c)(4) allows the performance of radiography in accordance with the Construction Code as an alternative to Q-4100(c) (3).	The acceptance standards in paragraph 3.0(a)(3) of Attachment 2 do not include the radiographic alternative of paragraph Q-4100(c)(4). **Basis**: The UT examinations performed in accordance with the proposed alternative are in accordance with ASME Section XI, Appendix VIII, Supplement 11 as implemented through the PDI. These examinations are considered more sensitive for detection of defects, either from fabrication or service-induced, than either ASME Section III radiographic or ultrasonic methods. Furthermore, construction type flaws have been included in the PDI qualification sample sets for evaluating procedures and personnel. See Section V.A.3 of this Request for additional justification.
Preservice Inspection	**3.0(b) Preservice Inspection**
Q-4200(b) states that the preservice examination acceptance standards of Table IWB-3514-2 shall be met for the weld overlay. Cracks in the outer 25% of the base metal shall meet the design analysis requirements of Q-3000.	The acceptance standards in paragraph 3.0(b)(2) of Attachment 2 are identical to paragraph Q-4200(b) except paragraph 3.0(b)(2) includes the following statement: "In applying the acceptance standards, wall thickness, t_w, shall be the thickness of the weld overlay." **Basis**: This provision is actually a clarification that the nominal wall thickness of Table IWB-3514-2 shall be considered the thickness of the weld overlay. It must be remembered that the acceptance standards were originally written for the welds identified in IWB-2500. Because IWB-2500 does not address weld overlays, this clarification was provided to avoid any potential confusion. However, defining the weld overlay thickness as the nominal wall thickness of Table IWB-3514-2 has always been the practice since it literally becomes the new design wall of the piping or component nozzle.

Code Case N-504-3 and Appendix Q of ASME Section XI	Proposed Alternative of Attachment 2
Pressure Testing	**4.0 Pressure Testing**
(h) The completed repair shall be pressure tested in accordance with IWA-5000. A system hydrostatic test is required if the flaw penetrated the pressure boundary. A system leakage test may be performed if pressure boundary is not penetrated.	The pressure testing requirements of Section 4.0 of Attachment 1 are similar to paragraph (h) of Code Case N-504-3 except that only a system leakage test per IWA-5000 is required.

JAFP-08-0099

Attachment 5 to Enclosure 1

Technical Basis for Alternatives to ASME Code Case N-638-1,
Ambient Temperature Temperbead Welding

TECHNICAL BASIS FOR PROPOSED ALTERNATIVES TO ASME CODE CASE N-638-1, *AMBIENT TEMPERATURE TEMPERBEAD WELDING*

1. Basis for Area Limitation Change to 500 Square Inches

IWA-4600 and versions of ASME Code Case N-638 prior to Revision 3 contained a limit of 100 square inches for the surface area of a temperbead weld over ferritic base metal. The area limitation in Attachment 3 is 500 square inches. The proposed weld overlay will be greater than 100 square inches but less than 500 square inches.

Technical justification for allowing weld overlays on ferritic materials with surface areas up to 500 square inches is provided in the white paper supporting the changes in ASME Code Case N-638-3 and EPRI Report 1011898 (Ref. 6). The ASME white paper notes that the original limit of 100 square inches in Code Case N-638-1 was arbitrary. It cites evaluations of a 12-inch diameter nozzle weld overlay to demonstrate adequate tempering of the weld heat affected zone (HAZ) (Section 2a of the white paper), residual stress evaluations demonstrating acceptable residual stresses in weld overlays ranging from 100 to 500 square inches (Section 2b of the white paper), and service history in which weld repairs exceeding 100 square inches were NRC approved and applied to DMW nozzles in several BWR and PWR (Section 3c of the white paper) applications. Some of the cited repairs are greater than 15 years old, and have been inspected several times with no evidence of any continued degradation.

It is important to note that the above theoretical arguments and empirical data have been verified in practice by extensive field experience with temperbead weld overlays, with ferritic material coverage ranging from less than 10 square inches up to and including 325 square inches. The table below provides a partial list of such applications.

Date	Plant	Component	Nozzle Diameter (in)	Approx. LAS Coverage (in^2)
November 2006	SONGS Unit 3	PZR spray nozzle Safety/relief nozzles PZR surge nozzle	5.1875 8 12.75	40 60 110
November 2006	Catawba Unit 1	PZR spray nozzle Safety/relief nozzles PZR surge nozzle	4 6 14	30 50 120
November 2006	Oconee Unit 1	PZR spray nozzle Safety/relief nozzles PZR surge nozzle HL Surge Nozzle	4.5 4.5 10.875 10.75	30 30 105 70
October 2006	McGuire Unit 2	PZR spray nozzle Safety/relief nozzles PZR surge nozzle	4 6 14	30 50 120
April 2006	Davis-Besse	Hot leg drain nozzle	4	16
February 2006	SONGS Unit 2	PZR spray nozzle Safety/relief nozzles	8 6	50 28

Date	Plant	Component	Nozzle Diameter (in)	Approx. LAS Coverage (in^2)
November 2005	Kuosheng Unit 2	Recirc. outlet nozzle	22	250
April 2004	Susquehanna Unit 1	Recirc. inlet nozzle Recirc. outlet nozzle	12 28	100 325
November 2003	TMI Unit 1	Surge line nozzle	11.5	75
October 2003	Pilgrim	Core spray nozzle CRD return nozzle	10 5	50 20
October 2002	Peach Bottom Units 2 & 3	Core spray nozzle Recirc. outlet nozzle CRD return nozzle	10 28 5	50 325 20
October 2002	Oyster Creek	Recirc. outlet nozzle	26	285
December 1999	Duane Arnold	Recirc. inlet nozzle	12	100
June 1999	Perry	Feedwater nozzle	12	100
June 1998	Nine Mile Point Unit 2	Feedwater nozzle	12	100
March 1996	Brunswick Units 1 & 2	Feedwater nozzle	12	100
February 1996	Hatch Unit 1	Recirc. inlet nozzle	12	100
January 1991	River Bend	Feedwater nozzle	12	100
March 1986	Vermont Yankee	Core spray nozzle	10	50

It can be seen from the information above that the original DMW weld overlay was applied over 20 years ago, and weld overlays with low alloy steel coverage in the 100-square inch range have been in service for 5 to 15 years. Several overlays have been applied with low alloy steel coverage significantly greater than the 100 square inches. These overlays have been examined with PDI qualified techniques, in some cases multiple times, and none have shown any signs of new cracking or growth of existing cracks.

2. Clarification of Charpy V-Notch Acceptance Criteria

Paragraph 2.1(j) of Code Case N-638-1 states, "The average of the three HAZ impact tests shall be equal to or greater than the average values of the three unaffected base metal tests." However, the Charpy V-notch test acceptance criteria in Code Case N-638-1 is misleading and inconsistent with the specified acceptance criteria in Section XI applicable to other Class 1 components, since it implies that all three parameters - lateral expansion, absorbed energy, and percent shear fracture – must be equal to or exceed the base material values.

Code Case N-638-2 corrected paragraph 2.1(j) to state that Charpy V-notch acceptance criteria is based on the *average lateral expansion values* rather than the average of all three values. This change clarified the intent of the code case and aligned its Charpy V-notch acceptance criteria with that of Sections III and XI as demonstrated in the Code references provided below.

- ASME Section III – NB-4330, *Impact Test Requirements*
- ASME Section XI - IWA-4620, *Temperbead Welding of Similar Materials*
- ASME Section XI - IWA-4630, *Temperbead Welding of Dissimilar Materials*

The Attachment 3 acceptance criteria for Charpy V-notch testing of the weld HAZ is as specified in Code Case N-638-2. The ASME Section XI basis for this change is documented in the White Paper in ASME C&S Connect for Code Case N-638-2.

Enclosure 2

JAFP-08-0099

List of Regulatory Commitments

List of Regulatory Commitments

The following table identifies those actions committed to by Entergy in this document. Any other statements in this submittal are provided for information purposes and are not considered to be regulatory commitments.

COMMITMENT	TYPE (Check one)		SCHEDULED COMPLETION DATE (If Required)
	ONE-TIME ACTION	CONTINUING COMPLIANCE	
Weld overlay examination results including a listing of indications detected.	X		14 days after completing the final ultrasonic examinations of the completed weld overlays
Disposition of indications using the standards of ASME Section XI, Subsection IWB-3514-2 and/or IWB-3514-3 criteria and, if possible, the type and nature of the indications	X		14 days after completing the final ultrasonic examinations of the completed weld overlays
A discussion of any repairs to the weld overlay material and/or base metal and the reason for the repairs.	X		14 days after completing the final ultrasonic examinations of the completed weld overlays
Submit to the NRC a stress analysis summary demonstrating that the N-2C nozzle to safe-end DMW will perform its intended design function after weld overlay installation	X		Within 60 days of completing JAF's refueling outage R-18