Methodist Hospital OF INDIANA, INC.

1701 North Senate Boulevard
P.O. Box 1367
Indianapolis, IN 46206
(317) 924-6411

August 10, 1990

Materials Licensing Section
U. S. Nuclear Regulatory Commission, Region III
799 Roosevelt Road
Glen Ellyn, Illinois 60137

Gentlemen:

Please amend our byproduct materials license number 13-02063-01 as follows:

(1) Certain eye tumors are treated with an eye plaque that holds I-125 seeds. The eye plaque is sutured in place during treatment. These I-125 seeds are also approved for use in permanent implants. The eye plaque protocol requires that the seeds be removed after 3-7 days of treatment. These patients may not require confinement for medical reasons during the treatment, and the dose rate from these patients during treatment is less than 5 millirem per hour at one meter as required by 10 CFR Part 35.75 "Release of patients containing radiopharmaceuticals or permanent implants". Release of a patient during treatment with the eye plaque will cause no significant risk to other persons and will reduce the cost to the patient by up to approximately $200 per day while freeing up a hospital room for other patients requiring medical care.

We request authorization to release patients with I-125 eye plaques from confinement for medical care only when, in the judgement of the physician, confinement will not add to the efficacy of the treatment or the medical care of the patient. Patients will be instructed to stay in a home or hotel in the Indianapolis, Indiana vicinity and will be give specific instructions to follow in the event the eye plaque causes problems. Patients will be given a wrist band and/or necklace identifying the radioactive eye plaque, and they will be instructed to return to Methodist Hospital of Indiana, Inc. for removal of of the eye plaque and the I-125 seeds. After removal of the seeds, the patients will be surveyed in accordance with 10 CFR Part 35.404.

A detailed description of the eye plaque applicator is provided as attachment 1. Attachment 2 is the radiation safety instructions that will be given to patients to allow them to leave the hospital with the eye plaque in place. The transmission of I-125 gamma rays and x-rays through the leaded eye patch referred to in the instructions is approximately 10^{-6}. Patients will also be give a wrist band and/or necklace that identifies them as eye plaque patients and gives the phone number to call if the patient has a medical emergency. Methodist Hospital retains the right to modify the instructions to patients, the wrist band, and the necklace, but any modifications will be equivalent to those submitted with this request. Patients will be telephoned approximately 24 hours before their plaque is due to be removed to remind the patients of their appointment for plaque removal.

(2) We would like to request an exemption from the requirement for decay-in-storage to "hold byproduct material for decay a minimum of ten half-lives" (10 CFR Part 35.92), with regard specifically to contaminated trash (paper products, gloves, disposible utencils, etc.) from patients hospitalized for treatment with I-131 (> 30 mCi) for thyroid cancer:

In our institution, patients treated for thyroid cancer with I-131 (> 30 mCi) typically require 2-4 days of hospitalization, during which time all potentially contaminated trash (paper products, gloves, disposible eating utencils and dishware, etc.) are placed in appropriate receptacles in the room for subsequent survey by radiation safety staff. Any trash bags reading greater than background (measured with a thin end-window GM survey meter) are then transferred to the short-term radioactive waste storage area. There is often uneaten food in these bags, significantly complicating the storage process. We have addressed this problem with a top-loading 23 cu. ft. freezer, but, due to an increase in the number of these treatment procedures, our storage capacity is currently strained to the limit. Many of the bags decay to background before 10 half-lives (81 days) have transpired, but 10 CFR 35.92 requires that they continue to be stored through the full 10 half-lives. Once the radioactivity has decayed to background, these bags become more of a biological hazard than a radioactive hazard. We can always increase our storage capacity by purchasing another freezer, but I believe that our current capacity is sufficient if we were only required to hold the trash bags for a minimum of 4 half-lives instead of 10 half-lives. These bags are surveyed, stored, and disposed of only by radiation safety personnel, so that the survey requirement should be sufficient to guarantee that the trash is truly nonradioactive prior to disposal as normal trash.

(3) Our license currently contains a possession limit of 50 mCi each in any chemical and/or physical form for "any byproduct material with atomic numbers 3 through 83, except as noted above or below". In order to be exempt from the financial assurance requirements for decommissioning (Regulatory Guide 3.66, June 1990),

please amend the possession limit to 10^3 times the applicable amounts in Appendix C of 10 CFR Part 20 for "any byproduct material with atomic numbers 3 through 83, except as noted above or below".

Enclosed is a check for $290 as required by 10 CFR Part 170. If you have any questions regarding this information, please let me know (317-929-3572).

Sincerely,

Robert T. Anger Jr.

Robert T. Anger, Jr., M.S.
Radiation Safety Officer

ATTACHMENT 1

Description of I-125 Eye Plaques
for Treatment of Eye Tumors

averages approximately $80. Salvage value of the metal plaque material is approximately 60% by weight of the current gold market value.

SEED CARRIER INSERT

Development of the seed carrier insert considered reproducibility and ease of seed location. Design criteria include a 1 mm layer (tissue equivalent) between the I-125 seeds and the outer scleral surface, and a seed geometry which locates seeds uniformly over the area of treatment.

The final design of the seed carrier insert is a spherical shell segment which fits snugly into the metal shield. The material is a medical grade silicone rubber. Molded into the outer surface are seed "troughs", 5 mm long by 1.25 mm deep. The physical dimensions of the I-125 seeds are approximately 4.5 mm length by 0.8 mm diameter. Because of the curved back surface of the insert, the optimal depth for the seed troughs is 1.0 mm. However, through experimentation it was found that an additional 0.25 mm depth aided seed emplacement. (There is a tendency for the silastic rubber to "squeeze back" the seeds.) The thickness of the insert at its center is therefore 2.25 mm. The height of the edge of the insert (which determines the height of the lip of the metal shield) ranges from 2.5 mm to 3.3 mm for plaque diameters 12 mm to 20 mm. The seed troughs have been arranged in regular geometric shapes, starting by placing the maximum number of seeds as near the perimeter of the insert as possible. A fabrication constraint is to allow a minimum of approximately 1 mm between seed troughs. When the I-125 seeds are located in the insert, their centers lie on a spherical shell of radius 13.7 mm (12.3 mm radius to inner surface of insert, 1.0 mm intermediate layer, and 0.4 mm seed radius).

COMS GOLD PLAQUE

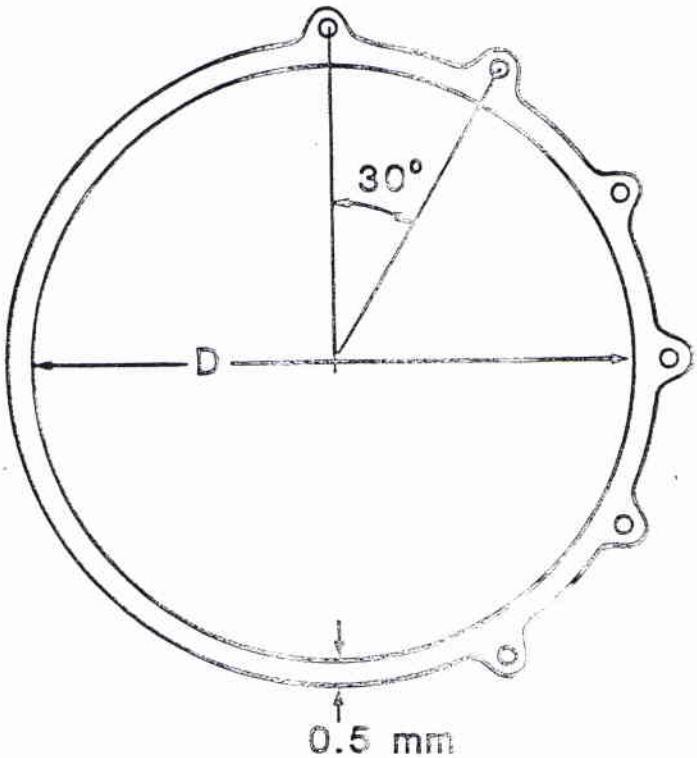

TOP VIEW

Diameter D (mm)	Lip Height H (mm)
12	2.5
14	2.6
16	2.8
18	3.0
20	3.3

SIDE VIEW

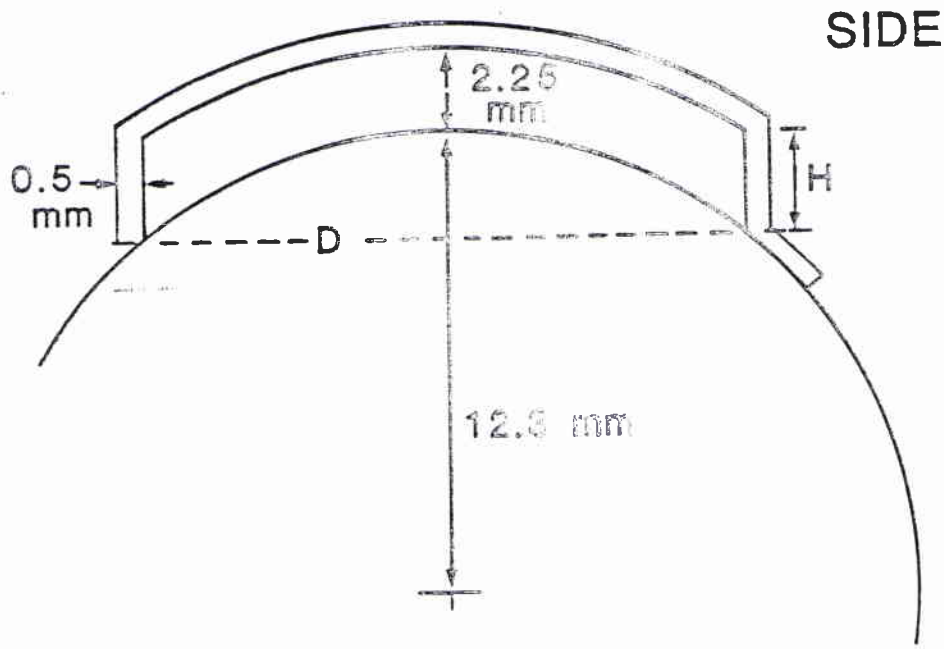

Illustrated: 16 mm plaque
Scale 5:1

PLAQUE SET
5 SIZES

PLAQUE COMPONENTS
METAL SHIELD, TEMPLATE, INSERT

PLAQUE MODIFIED
TO ABUT CILIARY BODY

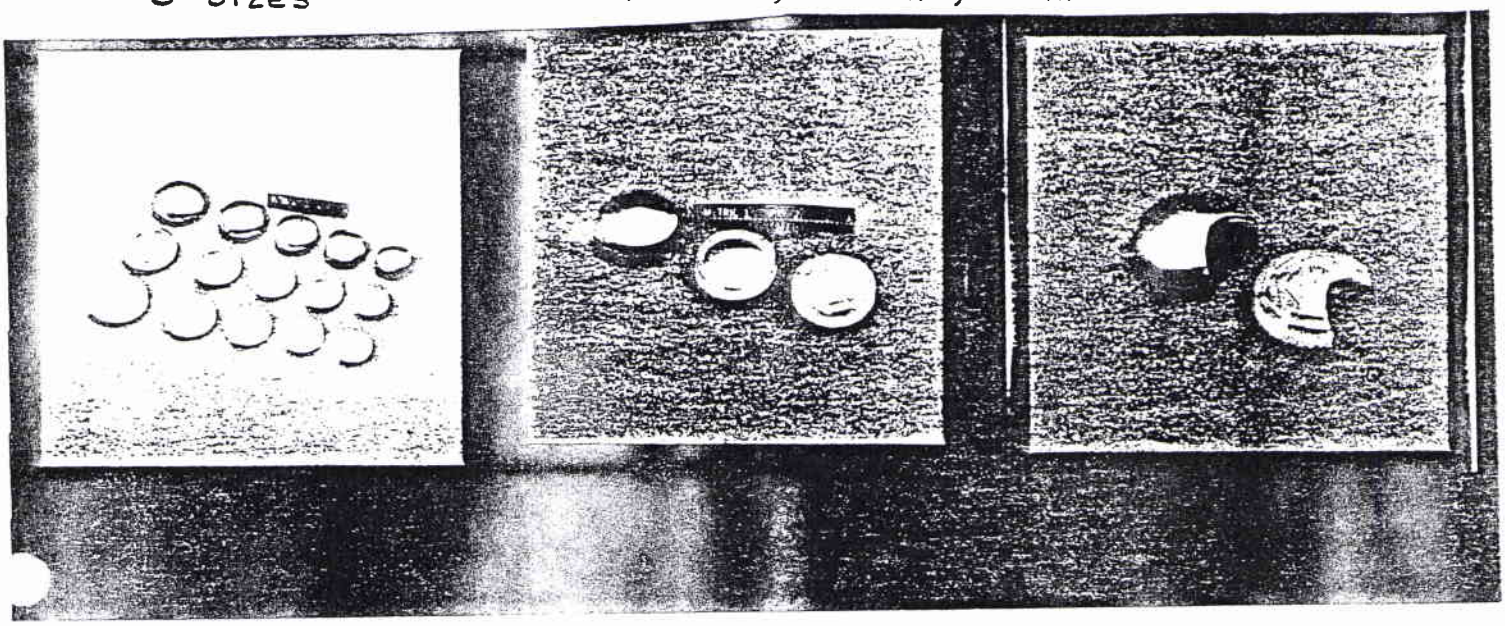

ASSEMBLED 14mm PLAQUE

13 ^{125}I SEEDS

It should be noted that various centers have expressed satisfaction with the original template design, and that purchase/use of the modified templates is on physician preference.

Other Plaque Design Considerations

Additional comments regarding the COMS plaque system have been received:

1. Too many suture lugs, resulting in some difficulties at application. If institution concurs, it is easy to snip off various suture lugs and file smooth the cut edge. Selection of lugs to be removed should be judiciously deliberated, and only after experience with several applications.
2. Scribe lines on plaque/template.
   One institution has recommended that scribe lines be made on the outer (back) side of the gold plaque and template: two perpendicular lines crossing at the plaque center and extending down the outer lip. This is proposed to aid in orientation and placement. Again, this is offered for individual institution consideration.

Sterilization

The recommended sterilization procedure for the assembled radioactive plaque is gas sterilization. For this purpose, a suitable metal (shielding) container, which does not interfere with the sterilization process is probably required.

A single test of autoclave sterilization of an assembled plaque has been conducted, and no deliterious effects on the assembled plaque were visually apparent on any plaque components, either before or after disassembly. Institutions may wish to pursue their own tests of this.

Don't autoclave acrylic template !

Appendix 2

RADIATION SAFETY INSTRUCTIONS
I-125 EYE PLAQUE PATIENTS

The U.S. Nuclear Regulatory Commission (NRC) has issued strict guidelines governing thr release from the hospital of patients that have radioactive sources in their body. To keep hospital costs to a minimum, I-125 eye plaque patients, such as yourself, for whom there is no medical reason for hospitalization, are allowed to convalesce in a home or hotel in the Indianapolis vicinity during the approximately one week treatment time. In accepting this hospital discharge, you, the patient, agree to abide by all of the following safety guidelines. If you are unable to comply with the following rules, please advise the physician in charge of your care so that arrangements for hospitalization can be made.

(1) The radiation dose to other people from the radioactive material contained in your eye implant is a function of three factors: time, distance, and shielding. By sitting across the room from people and wearing your lead-lined eye patch, you can reduce the radiation levels to other persons to levels that are well within the NRC regulations. Wear the eye patch at all times when other persons are around and maintain a distance of six feet or greater from them. Use of the lead eye shield and the six foot rule reduces the radiation levels such that it is safe for your own children and family. Remembering that distances of separation greater than six feet offer increased levels of protection, you might want to modify your life-style to achieve this during the week.

(2) To minimize the concerns of non-family members about the possible exposure of children and pregnant women to radiation:

(a) no children under 18 or pregnant women may visit.

(b) you must restrict yor activities to your hotel room, home, and backyard. You may not go out in public, go to work, go to church, or go to a friend's house.

(3) Providing the lead eye shield is worn and you face to the outside edge of the bed or up, there is no need to change your sleeping arrangements.

(4) Do no remove the wrist band and/or necklace. These are necessary to notify medical personnel in the event that you have a medical emergency during the treatment period.

- Appendix 2 (cont.)

RADIATION SAFETY INSTRUCTION
I-125 EYE PLAQUE PATIENTS
PAGE 2

Should you have any questions on radiation safety, please call:

_____	DAY: 929-3172
Radiation Therapy Physicist	NIGHT: hospital paging operator (929-8551)
or	
Robert T. Anger, Jr.	DAY: 929-3572
Radiation Safety Officer	NIGHT: hospital paging operator (929-8551)

The above guidelines have been discussed with me by

.

_____
Signature

_____
Date