Facility: ANO-1 Date of Examination: 9-8-2008

Examination Level: RO X SRO ☐ Operating Test Number: 2008-1

Administrative Topic (see Note)	Type Code*	Describe activity to be performed
Conduct of Operations A1. 2.1.29 (Imp 4.1)	N/R	Knowledge of how to conduct system lineups, such as valves, breakers, switches, etc. A1JPM-RO-LINE1
Conduct of Operations A2. 2.1.19 (Imp 3.9)	N/S	Ability to use plant computers to evaluate system or component status. A1JPM-RO-PMS3
Equipment Control A3. 2.2.12 (Imp 3.7)	D/R	Knowledge of surveillance procedures. A1JPM-RO-SURV3
Radiation Control A4. 2.3.4 (Imp 3.2)	M/R	Knowledge of radiation exposure limits under normal or emergency conditions. A1JPM-RO-DOSE-SVY2
Emergency Procedures/Plan A5.	N/A	N/A

NOTE: All items (5 total) are required for SROs. RO applicants require only 4 items unless they are retaking only the administrative topics, when all 5 are required.

* Type Codes & Criteria:
(C)ontrol room, (S)imulator, or Class(R)oom
(D)irect from bank (≤ 3 for ROs; ≤ 4 for SROs & RO retakes)
(N)ew or (M)odified from bank (≥ 1)
(P)revious 2 exams (≤ 1; randomly selected)

Facility: ANO-1 Date of Examination: 9-8-2008

Examination Level: RO ☐ SRO X Operating Test Number: 2008-1

Administrative Topic (see Note)	Type Code*	Describe activity to be performed
Conduct of Operations A1. 2.1.23 (Imp 4.3)	D/R	Ability to perform specific system and integrated plant procedures during all modes of plant operation. A1JPM-SRO-HTBAL1
Conduct of Operations A2. 2.1.34 (Imp 3.5)	D/R	Knowledge of primary and secondary plant chemistry limits. A1JPM-SRO-CHEM1
Equipment Control A3. 2.2.12 (Imp 4.1)	D/R	Knowledge of surveillance procedures. A1JPM-SRO-SURV4
Radiation Control A4. 2.3.4 (Imp 3.7)	M/R	Knowledge of radiation exposure limits under normal or emergency conditions. A1JPM-SRO-DOSE-SVY2
Emergency Procedures/Plan A5. 2.4.41 (Imp 4.6)	N/S	Knowledge of the Emergency Action Level thresholds and classification A1JPM-SRO-EAL11

NOTE: All items (5 total) are required for SROs. RO applicants require only 4 items unless they are retaking only the administrative topics, when all 5 are required.

* Type Codes & Criteria:
(C)ontrol room, (S)imulator, or Class(R)oom
(D)irect from bank (≤ 3 for ROs; ≤ 4 for SROs & RO retakes)
(N)ew or (M)odified from bank (≥ 1)
(P)revious 2 exams (≤ 1; randomly selected)

A1. Conduct of Operations

N/R

K/A 2.1.29

Knowledge of how to conduct system lineups, such as valves, breakers, switches etc.

A1JPM-RO-LINE1

UNIT: 1 REVISION # 0 DATE: _____

TUOI NUMBER: A1JPM-RO-LINE1

SYSTEM: A.1 – Conduct of Operations

TASK: Perform a Partial Valve Line-up on C-28A Instrument Air Compressor

JTA: ANO-RO-ADMIN-NORM-182

KA VALUE RO 4.1 SRO 4.0 KA REFERENCE: 2.1.29

APPROVED FOR ADMINISTRATION TO: RO X SRO _____

TASK LOCATION: INSIDE CR: _____ OUTSIDE CR: _____ BOTH: X

SUGGESTED TESTING ENVIRONMENT AND METHOD (PERFORM OR SIMULATE):

PLANT SITE: _____ SIMULATOR: _____ CLASSROOM: PERFORM

POSITION EVALUTED: RO X SRO _____

ACTUAL TESTING ENVIRONMENT: PLANT SITE: _____ SIMULATOR: _____ CLASSROOM: X

ACTUAL TESTING METHOD: SIMULATE: _____ PERFORM: X

APPROXIMATE COMPLETION TIME IN MINUTES: 15 MINUTES

REFERENCES: 1015.001 Conduct of Operations

EXAMINEE'S NAME: _____ SSN: _____

EVALUATOR'S NAME: _____

THE EXAMINEE'S PERFORMANCE WAS EVALUATED AGAINST THE STANDARDS CONTAINED IN THIS JPM AND IS DETERMINED TO BE:

SATISFACTORY: _____ UNSATISFACTORY: _____

PERFORMANCE CHECKLIST COMMENTS: _____

START TIME: _____ STOP TIME: _____ TOTAL TIME: _____

SIGNED: _____ DATE: _____

SIGNATURE INDICATES THIS JPM HAS BEEN COMPARTED TO ITS APPLICABLE PROCEDURE BY A QUALIFIED INDIVIDUAL (NOT THE EXAMINEE) AND IS CURRENT WITH THAT REVISION.

THE EXAMINER SHALL REVIEW THE FOLLOWING WITH THE EXAMINEE:

The examiner shall review the "Briefing Checklist - System Walkthrough" portion of 1064.023 Attachment 6 with the examinee.

JPM INITIAL TASK CONDITIONS: It is desired to align the C-28A Instrument Air Compressor within the tagout Boundary following compressor replacement. The tagout isolation boundary valves are: IA-790A – Closed; CS-150A – Closed.

TASK STANDARD: The examinee has correctly identified valves internal to the tagout boundary and their correct positions.
IA-1057 – Closed; CS-151A – Open; CV-1000A – Closed.

TASK PERFORMANCE AIDS: Copy of partially completed 1015.001E, 1015.001G, and 1015.001 step 6.2.3

INITIATING CUE:

The CRS requests that you complete 1015.001G for a partial valve lineup for the C-28A Instrument Air Compressor within the tagout boundary per 1015.001 step 6.2.3 B.

CRITICAL ELEMENTS (C): 1

(C)	PERFORMANCE CHECKLIST	STANDARDS	N/A	SAT	UNSAT
NOTE: Provide examinee with a copy of partially completed 1015.001E, form 1015.001G, and copy of 1015.001 step 6.2.3.					
(C)	1. List component number, description (optional), and required position from applicable attachment.	Examinee will need to locate PID for C28A instrument air compressor, Attachment A of 1106.015 Condensate Transfer system page 4 of 10 Turbine building Basement (By Condensate Pumps) section and Attachment A of 1104.024 Instrument Air System page 3 of 6 C-28 Area. To determine the following valves and their positions: **IA-1057A – Closed** **CS-151A – Open** **CS-1000A - Closed**			
	2. N/A any lines and blanks not used.	Draw a line through blank lines on form 1015.001G and N/A besides line or N/A each blank line			
	3. Enter reason for partial lineup, e.g., post maintenance test, tagout number, etc.	Should copy the reason from form 1015.001E			
	4. If NOT obvious from components and reason listed, THEN describe lineup, e.g., list major components, boundaries, or list components, boundaries, or list components excluded, etc.	Should not have to perform this step			
	5. Obtain SRO signature, indicating approval of appropriateness and scope of the partial lineup.	When examinee says he will give the form to SRO for approval **Inform examinee JPM is complete**			

END

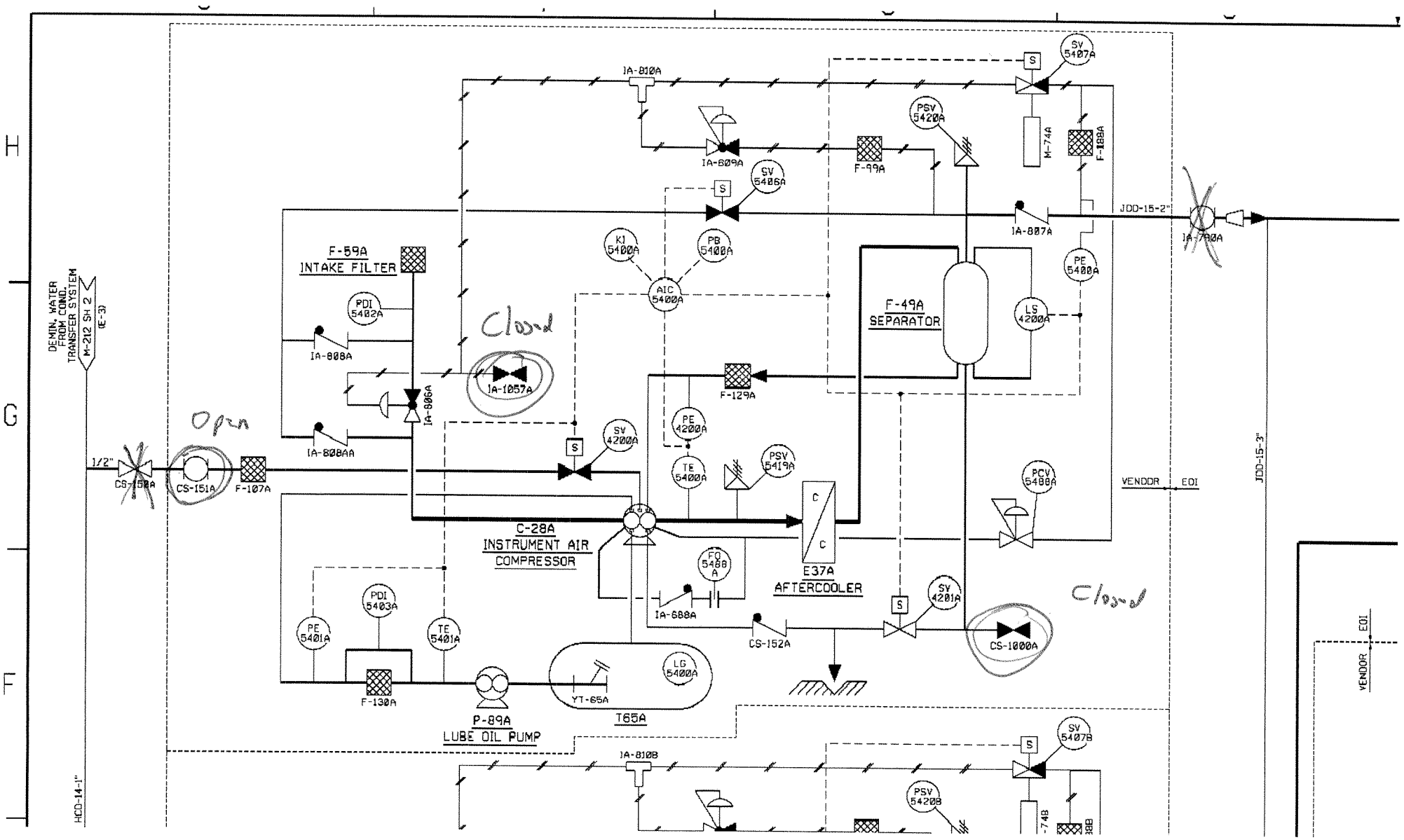
DEMIN. WATER FROM COND. TRANSFER SYSTEM
M-212 SH 2 (E-3)
HCD-14-1"
1/2"
CS-150A
CS-151A
F-107A
Open
F-59A
INTAKE FILTER
PDI 5402A
IA-808A
IA-808AA
IA-806A
Closed
IA-1057A
IA-810A
IA-809A
SV 5406A
F-99A
PSV 5420A
M-74A
F-188A
SV 5407A
JDD-15-2"
IA-807A
IA-790A
KI 5400A
PB 5400A
AIC 5400A
F-49A
SEPARATOR
LS 4200A
PE 5400A
F-129A
PE 4200A
SV 4200A
TE 5400A
PSV 5419A
PCV 5480A
VENDOR
EOI
JDD-15-3"
C-28A
INSTRUMENT AIR
COMPRESSOR
FQ 5488 A
E37A
AFTERCOOLER
IA-688A
CS-152A
SV 4201A
Closed
CS-1000A
PDI 5403A
PE 5401A
TE 5401A
F-130A
P-89A
LUBE OIL PUMP
YT-65A
T65A
LG 5400A
IA-810B
SV 5407B
PSV 5420B
-74B
188B

KEY

ATTACHMENT A

VALVE NUMBER	TAG ✓	OPEN	CLOSED	DESCRIPTION
TURBINE BUILDING BASEMENT (BY CONDENSATE PUMPS)				
CS-1088			X	Vent on Line From Cond Pump Disch To Cond Transfer HDR
CS-1089			X	Drain on Line from Cond Pump Disch to Cond Transfer HDR
CS-150A		X		Condensate to IA Compressor C-28A
CS-151A		X		C-28A Condensate Supply Isol
CS-150B		X		Condensate to IA Compressor C-28B
CS-151B		X		C-28B Condensate Supply Isol
CS-150C			X	Future Connection
CS-1000A			X	F-49A Water Drain
CS-1000B			X	F-49B Water Drain
SECONDARY SAMPLE ROOM				
CS-292		X		Cond Transfer To Secondary Sample Room Isol
CS-321		X		Cond Transfer Flush Isol to Secondary Sample Sys
CS-320		(1)	(1)	Cond Transfer Flush Throttle For S/G (Future) Sample CAT COL A
COMPUTER ROOM (BY VUC-5A)				
CS-330			X	Cond Transfer to Computer Rm Unit Clr VUC-5C Drain
CS-329		X		Cond Transfer to Computer Rm Unit Clr VUC-5C Filter F-55 Outlet
CS-328		X		Cond Transfer to Computer Rm Unit Clr VUC-5C Filter F-55 Inlet

Note 1: Throttled per Chemistry's request to facilitate T-41 DI water sample.

KEY

ATTACHMENT A

VALVE NUMBER	TAG ✓	OPEN	CLOSED	DESCRIPTION
IA-16		X		IA Hdr to Intake Structure and Majority of Turbine Bldg (South of IA Dryer)
IA-19		X		IA Hdr Isol (IA Compr Rm South of IA Dryers)
IA-18		X		IA Hdr Isol to Aux Bldg (South of IA Dryers)
IA-17		X		IA Hdr Isol (South IA Dryers)
IA-92		X		IA Root Isol to T-86, CV-2888, P-7A/B Recirc and IA Hdr Press Instruments
IA-155		X		IA Hdr Isol to P-7A/B EFWPs Comb Recirc (South of IA Dryers)
IA-483		X		IA Isol to P-7A/B EFWPs Comb Recirc (South of IA Dryer)
IA-5408		X		IA Isol to PS-5408 (South of IA Dryers)
IA-5409		X		IA Isol to PS/PT-5409 (South of IA Dryers)
C-28 AREA				
IA-790A		X		IA Compressor C-28A Outlet Isol
IA-790B		X		IA Compressor C-28B Outlet Isol
IA-790C			X	Future Connection
IA-1057A			X	C-28A Water Condensate Drain
IA-1057B			X	C-28B Water Condensate Drain
IA-811		X		IA Receiver T-52/T-39A Cross-Tie at T-52
IA-805		X		IA Receiver T-52 Drain Trap Vent Isol
IA-796		X		IA Receiver T-52 Drain Isol
IA-1055			X	IA Receiver T-52 Drain Trap Bypass
IA-791		X		IA Filter F-32 Inlet Isol
IA-792			X	IA Filter F-32 Bypass
IA-793		X		IA Filter F-32 Outlet Isol
IA-5400C		X		PDI-5400 Upstream Isol
IA-5400D		X		PDI-5400 Downstream Isol

KEY

ARKANSAS NUCLEAR ONE		
E-DOC TITLE: **PARTIAL SYSTEM LINEUP SHEET**	E-DOC NO. 1015.001G	CHANGE NO. 055-00-0

System: Instrument Air C28-A Air Compressor

Reason for partial lineup, e.g. post maintenance test, clearance no., etc. Describe lineup if needed, e.g., list major components, boundaries, or list components excluded, etc.:

Align system within tagout boundary due to compressor replacement. Tag Out boundary valves are IA 790A IA compressor C-28A Outlet Isolation, and CS 150A Condensate to IA compressor C-28A

Partial lineup approval: _____ Date: _____
SRO Signature

Component	Description (optional)	Required Position	Checked Initial	SRO Initial*
IA 1057A	C-28A Water Condensate Drain	Closed		
CS 151A	C-28A Condensate supply Isolation	Open		
CS 1000A	F-49A water drain	Closed		

N/A

*SRO Initial signifies review.

Lineup Performed By:

~KEY~

_____/_____ _____
Signature Initial Date

JPM INITIAL TASK CONDITIONS:

- C28A instrument Air compressor has been replaced it is still tagged out. Maintenance requests compressor to be properly aligned within the tag out boundaries.

INITIATING CUE:

- **The CRS requests that you complete 1015.001G for a partial valve lineup for the C-28A Instrument Air Compressor within the tagout boundary per 1015.001 step 6.2.3 B.**

ENTERGY OPERATIONS INCORPORATED
ARKANSAS NUCLEAR ONE

TITLE: **CONDUCT OF OPERATIONS**	DOCUMENT NO. **1015.001**	CHANGE NO. **066**
	WORK PLAN EXP. DATE **N/A**	
SET #	SAFETY-RELATED ☒YES ☐NO	IPTE ☐YES ☒NO
	TEMP MOD ☒YES ☐NO	LEVEL OF USE ☐ CONTINUOUS ☐ REFERENCE ☒ INFORMATIONAL
	PROGRAMMATIC EXCLUSION PER EN-LI-100 ☐YES ☒NO	

When you see these ***TRAPS***	Get these ***TOOLS***
Time Pressure	**Effective Communication**
Distraction/Interruption	**Questioning Attitude**
Multiple Tasks	**Placekeeping**
Over Confidence	**Self Check**
Vague or Interpretive Guidance	**Peer Check**
First Shift/Last Shift	**Knowledge**
Peer Pressure	**Procedures**
Change/Off Normal	**Job Briefing**
Physical Environment	**Coaching**
Mental Stress (Home or Work)	**Turnover**

VERIFIED BY	DATE	TIME

FORM TITLE:	FORM NO.	CHANGE NO.
VERIFICATION COVER SHEET	**1000.006A**	**054**

6.2 Performing Valve Alignments

6.2.1 Obtain the latest revision of the lineup.

6.2.2 Ensure Lineup Cover Sheet (E-DOC 1015.001E) and at least one Lineup Exception Sheet (E-DOC 1015.001F) maintained.

NOTE

If performance of a lineup check on a non-safety related system poses a safety concern, an ALARA concern, requires the building of scaffolding, or removal of access cover, etc., then the SRO may choose to NOT perform lineup check on that component. This constitutes a partial alignment.

6.2.3 IF a partial valve lineup to be performed, THEN perform either of the sub-steps below:

A. Use a Lineup Cover Sheet (E-DOC 1015.001E) and tailor existing lineup as follows:

- Designate "partial lineup" on lineup cover sheet.
- Enter reason for partial lineup, e.g., 1R21, tagout number, etc.
- Describe lineup, e.g., list major components, boundaries, or list components excluded, etc.
- IF including only pages of lineup that are needed, THEN so state on the lineup cover sheet, e.g., "Only pages 25 and 26 of 158".
- For valves in the body of the lineup, or on the pages included, that do NOT require checking, mark N/A and obtain SRO initial.
- Obtain SRO signature, indicating approval of appropriateness and scope of the partial lineup.

B. Use Partial System Lineup Sheet (E-DOC 1015.001G) as follows:

- List component number, description (optional), and required position from applicable attachment.
- N/A any lines and blanks NOT used.
- Enter reason for partial lineup, e.g., post maintenance test, tagout number, etc.
- IF NOT obvious from components and reason listed, THEN describe lineup, e.g., list major components, boundaries, or list components excluded, etc.
- Obtain SRO signature, indicating approval of appropriateness and scope of the partial lineup.

6.2.4 Conduct lineup per Attachment A.3 of this procedure.

6.2.5 Deliver completed lineup to an SRO for review.

ARKANSAS NUCLEAR ONE		
E-DOC TITLE: LINEUP COVER SHEET	E-DOC NO. 1015.001E	CHANGE NO. 055-00-0

System: Instrument Air C28-A Air Compressor

Procedure: 1104.024 and 1106.015 Attachment No. A

Complete Lineup ☐ or Partial Lineup ☒

If applicable, reason for partial lineup, e.g. 1R21, clearance no., etc. Describe lineup, e.g., list major components, boundaries, or list components excluded, etc.:

Align system within tagout boundary due to compressor replacement. Tag Out boundary valves are IA 790A IA compressor C-28A Outlet Isolation, and CS 150A Condensate to IA compressor C-28A

If applicable, partial lineup approval: [signature] Date: 9/10/2008
SRO Signature

Lineup Performed by:

Signature	Initial	Date

This system lineup has been completed per the requirements of Attachment A.3 of this procedure and reviewed per the requirements of SRO Review of Lineups section of this procedure.

SRO Signature Date

ARKANSAS NUCLEAR ONE		
E-DOC TITLE: PARTIAL SYSTEM LINEUP SHEET	E-DOC NO. 1015.001G	CHANGE NO. 055-00-0

System: _____ Page _____ of _____

Reason for partial lineup, e.g. post maintenance test, clearance no., etc. Describe lineup if needed, e.g., list major components, boundaries, or list components excluded, etc.:

_____

_____

Partial lineup approval: _____ Date: _____
SRO Signature

Component	Description (optional)	Required Position	Checked Initial	SRO Initial*

*SRO Initial signifies review.

Lineup Performed By:

_____/_____ _____
Signature Initial Date

_____/_____ _____
Signature Initial Date

SRO Review: _____ Date _____

A2. Conduct of Operations

N/S

K/A 2.1.19

Ability to use plant computers to evaluate system or component status.

A1JPM-RO-PMS3

UNIT: 1 REV # 0 DATE: _____

TUOI NUMBER: A1JPM-RO-PMS3

SYSTEM/DUTY AREA: ADMINISTRATIVE TOPIC – CONDUCT OF OPERATIONS

TASK: OPERATE THE PLANT COMPUTER

JTA#: ANO1-RO-PMS-NORM-7

KA VALUE RO: 3.9 SRO: 3.8 KA REFERENCE: 2.1.19

APPROVED FOR ADMINISTRATION TO: RO: X SRO: _____

TASK LOCATION: INSIDE CR: X OUTSIDE CR: _____ BOTH: _____

SUGGESTED TESTING ENVIRONMENT AND METHOD (PERFORM OR SIMULATE):

PLANT SITE: _____ SIMULATOR: PERFORM LAB: _____

POSITION EVALUATED: RO: X SRO: _____

ACTUAL TESTING ENVIRONMENT: SIMULATOR: X PLANT SITE: _____ LAB: _____

TESTING METHOD: SIMULATE: _____ PERFORM: X

APPROXIMATE COMPLETION TIME IN MINUTES: 5 MINUTES

REFERENCE(S): 1105.010

_____

EXAMINEE'S NAME: _____ SSN _____-_____-_____

EVALUATOR'S NAME: _____

THE EXAMINEE'S PERFORMANCE WAS EVALUATED AGAINST THE STANDARDS CONTAINED IN THIS JPM AND IS DETERMINED TO BE:

SATISFACTORY: _____ UNSATISFACTORY: _____

PERFORMANCE CHECKLIST COMMENTS:

_____

_____

_____

_____ Start Time _____ Stop Time _____ Total Time

SIGNED _____ DATE: _____

SIGNATURE INDICATES THIS JPM HAS BEEN COMPARED TO ITS APPLICABLE PROCEDURE BY A QUALIFIED INDIVIDUAL (NOT THE EXAMINEE) AND IS CURRENT WITH THAT REVISION.

THE EXAMINER SHALL REVIEW THE FOLLOWING WITH THE EXAMINEE:

The examiner shall review the "Briefing Checklist - System Walkthrough" portion of OP 1064.023 Attachment 6 with the examinee.

JPM INITIAL TASK CONDITIONS: The plant is at 100% power operations.

TASK STANDARD: The examinee has determined CRD rod 2 of group 2 motor temperature alarm on PMS was Disabled point T1G09 and placed it back into service

TASK PERFORMANCE AIDS: 1105.010, Plant Monitoring System

NOTE: 1105.010 covers the operation of the Plant Monitoring System, but the exact manipulations are within the skill of the craft. Therefore, use of procedure in hand is not required.

Simulator setup: verify the following points are disabled CRD motor temperature alarms disabled T1D10, T1F06, T1G09, T1H14, T1K11, and T1M05

INITIATING CUE:

The CRS directs you to verify all Group 2 rods motor temperature alarms are enabled on PMS per step 21.2.4 of 1105.010 Plant Computer Operation procedure

CRITICAL ELEMENTS (C): 1, 2, 3, 4, 5, 6, and 7

(C)	PERFORMANCE CHECKLIST	STANDARD	N/A	SAT	UNSAT
(C)	1. Type in turn on code PDFA <enter>	Type in turn on code PDFA <enter> on the keyboard	____	____	____
(C)	2. <enter>	This action will make print out the report	____	____	____
(C)	3. Should review print out.	Find several CRD motor temperature alarms disabled T1D10, T1F06, T1G09, T1H14, T1K11, and T1M05	____	____	____
(C)	4. Reference Exhibit A of 1105.009 CRD system operating procedure.	From print he will find point (T1G09) is disabled and he will need to use Exhibit A as a reference to find that it is group 2 rod 2.	____	____	____
(C)	5. Type in turn on code RPTA <enter>	Type in turn on code RPTA <enter> on the keyboard	____	____	____
(C)	6. Depress F2	Depress F2 on the keyboard	____	____	____
(C)	7. Type in desired point press enter	Type in desired point T1G09 on the keyboard	____	____	____
EXAMINER NOTE: The following steps are verifying the alarm was restored					
	8. Type in turn on code PDFA <enter>	Type in turn on code PDFA <enter> on the keyboard	____	____	____
	9. <enter>	This action will make print out the report	____	____	____
	10. Should review print out.	Point T1G09 should not be listed	____	____	____

EXAMINER NOTE: ***Once he verifies T1G09 is now restored the JPM is complete if he states he would update the ESL notebook tell him it is updated .***

END

EXAMINEE'S COPY

JPM INITIAL TASK CONDITIONS:

The plant is at 100% power operations.

INITIATING CUE:

The CRS directs you to verify all Group 2 rods motor temperature alarms are enabled on PMS per step 21.2.4 of 1105.010 Plant Computer Operation procedure.

ENTERGY OPERATIONS INCORPORATED
ARKANSAS NUCLEAR ONE

TITLE: **PLANT COMPUTER OPERATION**	DOCUMENT NO. **1105.010**	CHANGE NO. **014**
	WORK PLAN EXP. DATE **N/A**	TC EXP. DATE **N/A**
SET #	SAFETY-RELATED ☒YES ☐NO	IPTE ☐YES ☒NO
	TEMP ALT ☐YES ☒NO	
	PROGRAMMATIC EXCLUSION PER EN-LI-100 ☐YES ☒NO	

When you see these *TRAPS*	**Get these *TOOLS***
Time Pressure	**Effective Communication**
Distraction/Interruption	**Questioning Attitude**
Multiple Tasks	**Placekeeping**
Over Confidence	**Self Check**
Vague or Interpretive Guidance	**Peer Check**
First Shift/Last Shift	**Knowledge**
Peer Pressure	**Procedures**
Change/Off Normal	**Job Briefing**
Physical Environment	**Coaching**
Mental Stress (Home or Work)	**Turnover**

VERIFIED BY	DATE	TIME

FORM TITLE: VERIFICATION COVER SHEET	FORM NO. 1000.006A	CHANGE NO. 052-00-0

NOTE

TOC DDFA will display all computer points which are currently disabled from alarming. TOC PDFA (Points Disabled From Alarm report) shows the points with quality code DALM.

21.0 DISABLING/RESTORING COMPUTER POINTS FROM ALARM

21.1 Disabling Computer Points from Alarming

21.1.1 Obtain CRS/SM permission to disable point(s).

21.1.2 Type in Turn on Code DPFA, <enter>.

21.1.3 Depress F2.

21.1.4 Type in desired point <enter>.

21.1.5 Press Y and <enter> to save changes.

21.1.6 Print Points Disabled From Alarm report as follows:

A. Type in Turn on Code PDFA, <enter>.

B. <enter> (to send to print queue).

C. Update the PDFA report maintained in Control Room (normally in ESL Notebook).

21.1.7 Verify WR/WO submitted for repair/restoration of the disabled point(s) AND include words to effect to restore computer point alarm.

21.2 Restoring Computer Points from Alarming

21.2.1 Type in Turn on Code RPTA <enter>.

21.2.2 Depress F2.

21.2.3 Type in desired point <enter>.

21.2.4 Print Points Disabled From Alarm report as follows:

A. Type in Turn on Code PDFA, <enter>.

B. <enter> (to send to print queue)

C. Update the PDFA report maintained in Control Room (normally in ESL Notebook).

EXHIBIT A
1105.009

Page 1 of 2

CONTROL ROD LOCATION AND INSTRUMENT CROSS REFERENCE

Revised 5/5/05

GROUP	ROD	RX CORE GRID LOC.	C77 API AMP LOC.	RPI AMP (1)	PLANT/SPDS COMPUTER PI SIGNAL	PI SIGNAL FUSE	PLANT COMPUTER ROD TEMP	RX HEAD NOZZLE NUMBER
1	1	B-10	A10	10	Z1B10	F-10	T1B10	63
1	2	F-14	A9	9	Z1F14	F-9	T1F14	64
1	3	L-14	A3	3	Z1L14	F-3	T1L14	65
1	4	P-10	A18	18	Z1P10	F-18	T1P10	66
1	5	P-6	C10	46	Z1P06	F-46	T1P06	67
1	6	L-2	D1	55	Z1L02	F-55	T1L02	68
1	7	F-2	C11	47	Z1F02	F-47	T1F02	69
1	8	B-6	B18	36	Z1B06	F-36	T1B06	62
2	1	F-8	B11	29	Z1F08	F-29	T1F08	6
2	2	G-9	B5	23	Z1G09	F-23	T1G09	3
2	3	H-10	B1	19	Z1H10	F-19	T1H10	7
2	4	K-9	B15	33	Z1K09	F-33	T1K09	4
2	5	L-8	C1	37	Z1L08	F-37	T1L08	8
2	6	K-7	D5	59	Z1K07	F-59	T1K07	5
2	7	H-6	D2	56	Z1H06	F-56	T1H06	9
2	8	G-7	C5	41	Z1G07	F-41	T1G07	2
3	1	C-11	A14	14	Z1C11	F-14	T1C11	51
3	2	E-13	A5	5	Z1E13	F-5	T1E13	52
3	3	M-13	B13	31	Z1M13	F-31	T1M13	53
3	4	O-11	B14	32	Z1O11	F-32	T1O11	54
3	5	O-5	C14	50	Z1O05	F-50	T1O05	55
3	6	M-3	A6	6	Z1M03	F-6	T1M03	56
3	7	E-3	C4	40	Z1E03	F-40	T1E03	57
3	8	C-5	B4	22	Z1C05	F-22	T1C05	50
4	1	E-9	A2	2	Z1E09	F-2	T1E09	15
4	2	G-11	A8	8	Z1G11	F-8	T1G11	16
4	3	K-11	A1	1	Z1K11	F-1	T1K11	17
4	4	M-9	B9	27	Z1M09	F-27	T1M09	18
4	5	M-7	C9	45	Z1M07	F-45	T1M07	19
4	6	K-5	C17	53	Z1K05	F-53	T1K05	20
4	7	G-5	C8	44	Z1G05	F-44	T1G05	21
4	8	E-7	B8	26	Z1E07	F-26	T1E07	14

(1) RPI amp number is also the transfer switch number.
PASSPORT identifies a CRDM by its RPI amp/transfer switch number, i.e., Group 1 Rod 1 is CRDM-10

EXHIBIT A
1105.009

Page 2 of 2

CONTROL ROD LOCATION AND INSTRUMENT CROSS REFERENCE

Revised 5/5/05

GROUP	ROD	RX CORE GRID LOC.	C77 API AMP LOC.	RPI AMP (1)	PLANT/SPDS COMPUTER PI SIGNAL	PI SIGNAL FUSE	PLANT COMPUTER ROD TEMP	RX HEAD NOZZLE NUMBER
5	1	C-9	A12	12	Z1C09	F-12	T1C09	39
5	2	E-11	A13	13	Z1E11	F-13	T1E11	27
5	3	G-13	A11	11	Z1G13	F-11	T1G13	40
5	4	K-13	A4	4	Z1K13	F-4	T1K13	41
5	5	M-11	B3	21	Z1M11	F-21	T1M11	28
5	6	O-9	B2	20	Z1O09	F-20	T1O09	42
5	7	O-7	C12	48	Z1O07	F-48	T1O07	43
5	8	M-5	D4	58	Z1M05	F-58	T1M05	29
5	9	K-3	D3	57	Z1K03	F-57	T1K03	44
5	10	G-3	C13	49	Z1G03	F-49	T1G03	45
5	11	E-5	C3	39	Z1E05	F-39	T1E05	26
5	12	C-7	C2	38	Z1C07	F-38	T1C07	38
6	1	B-8	A15	15	Z1B08	F-15	T1B08	58
6	2	F-10	B6	24	Z1F10	F-24	T1F10	11
6	3	H-14	A7	7	Z1H14	F-7	T1H14	59
6	4	L-10	B16	34	Z1L10	F-34	T1L10	12
6	5	P-8	C15	51	Z1P08	F-51	T1P08	60
6	6	L-6	D6	60	Z1L06	F-60	T1L06	13
6	7	H-2	C16	52	Z1H02	F-52	T1H02	61
6	8	F-6	C6	42	Z1F06	F-42	T1F06	10
7	1	D-8	A17	17	Z1D08	F-17	T1D08	22
7	2	D-12	A16	16	Z1D12	F-16	T1D12	47
7	3	H-12	B10	28	Z1H12	F-28	T1H12	23
7	4	N-12	B7	25	Z1N12	F-25	T1N12	48
7	5	N-8	B17	35	Z1N08	F-35	T1N08	24
7	6	N-4	D7	61	Z1N04	F-61	T1N04	49
7	7	H-4	C18	54	Z1H04	F-54	T1H04	25
7	8	D-4	C7	43	Z1D04	F-43	T1D04	46
8	1	D-10	D14	68	Z1D10 (2)	F-68	T1D10	31
8	2	F-12	D13	67	Z1F12 (2)	F-67	T1F12	32
8	3	L-12	D12	66	Z1L12 (2)	F-66	T1L12	33
8	4	N-10	D11	65	Z1N10 (2)	F-65	T1N10	34
8	5	N-6	D10	64	Z1N06 (2)	F-64	T1N06	35
8	6	L-4	D9	63	Z1L04 (2)	F-63	T1L04	36
8	7	F-4	D8	62	Z1F04 (2)	F-62	T1F04	37
8	8	D-6	D15	69	Z1D06 (2)	F-69	T1D06	30

(1) RPI amp number is also the transfer switch number.
PASSPORT identifies a CRDM by its RPI amp/transfer switch number, i.e., Group 1 Rod 1 is CRDM-10

(2) Group 8 available on Plant Computer only.

A3. Equipment Control

D/R

K/A 2.2.12

Knowledge of surveillance procedures

A1JPM-RO-SURV3

ADMINISTRATIVE JOB PERFORMANCE MEASURE

TUOI: A1JPM-RO-SURV3

UNIT: 1 REV # 2 DATE: _____

TUOI NUMBER: A1JPM-RO-SURV3

SYSTEM/DUTY AREA: ADMINISTRATIVE TOPIC – EQUIPMENT CONTROL

TASK: PERFORM SURVEILLANCE TESTS

JTA#: ANO-RO-ADMIN-NORM-23

KA VALUE RO: 3.7 SRO: 4.1 KA REFERENCE: 2.2.12

APPROVED FOR ADMINISTRATION TO: RO: X SRO: _____

TASK LOCATION: INSIDE CR: _____ OUTSIDE CR: X BOTH: _____

SUGGESTED TESTING ENVIRONMENT AND METHOD (PERFORM OR SIMULATE):

PLANT SITE: _____ SIMULATOR: _____ LAB: PERFORM

POSITION EVALUATED: RO: X SRO: _____

ACTUAL TESTING ENVIRONMENT: SIMULATOR: _____ PLANT SITE: _____ LAB: X

TESTING METHOD: SIMULATE: _____ PERFORM: X

APPROXIMATE COMPLETION TIME IN MINUTES: 10 MINUTES

REFERENCE(S): 1104.036, Emergency Diesel Generator Operation

EXAMINEE'S NAME: _____ SSN _____-_____-_____

EVALUATOR'S NAME: _____

THE EXAMINEE'S PERFORMANCE WAS EVALUATED AGAINST THE STANDARDS CONTAINED IN THIS JPM AND IS DETERMINED TO BE:

SATISFACTORY: _____ UNSATISFACTORY: _____

PERFORMANCE CHECKLIST COMMENTS:

_____

_____

_____

_____ Start Time _____ Stop Time _____ Total Time

SIGNED _____ DATE: _____

SIGNATURE INDICATES THIS JPM HAS BEEN COMPARED TO ITS APPLICABLE PROCEDURE BY A QUALIFIED INDIVIDUAL (NOT THE EXAMINEE) AND IS CURRENT WITH THAT REVISION.

THE EXAMINER SHALL REVIEW THE FOLLOWING WITH THE EXAMINEE:

The examiner shall review the "Briefing Checklist - System Walkthrough" portion of OP 1064.023 Attachment 6 with the examinee.

JPM INITIAL TASK CONDITIONS: A surveillance test of DG1 Fuel Transfer Pump P-16A is in progress.

Data gathering of Supplement 5 of 1104.036 up to step 2.6 is completed.

TASK STANDARD: The examinee calculates pump flow rate correctly on Supplement 5 of 1104.036 and determines the data is below the minimum in the acceptance criteria.

TASK PERFORMANCE AIDS: 1104.036, Supplement 5, completed to step 2.6.

INITIATING CUE:

The CRS directs you to complete the surveillance test of P-16A in accordance with 1104.036, Supplement 5.

CRITICAL ELEMENTS (C) 2, 3, 4

(C)	PERFORMANCE CHECKLIST	STANDARD	N/A	SAT	UNSAT
	1. Review 1104.036, Supplement 5.	Examinee reviewed 1104.036, Supplement 5.	___	___	___
	NOTE: Inform examinee that the stopwatch reads 9:41.36 (9 minutes, 41.36 seconds).				
(C)	2. Calculate pump flow rate.	Examinee correctly calculated pump flow rate. Per note, 41.36 seconds equals .68 minutes. (200 – 105) / 9.68 = 9.81 gpm	___	___	___
(C)	3 Record flow rate in Section 3.0.	Examinee recorded flow rate in Section 3.0.	___	___	___
(C)	4 Evaluate flow rate, compare to "LIMITING RANGE FOR OPERABILITY" value.	Examinee circled "NO" in column titled "IS DATA WITHIN LIMITING RANGE". Examinee discussed declaring pump inoperable, notifying SM, writing Condition Report, initiating corrective action, and referring to Tech Specs.	___	___	___
	NOTE: ***The SM or CRS will consult Tech Specs to determine operability, it is the RO's responsibility to report the inoperability of P-16A only. Diesel operability will be determined by the SM/CRS.*** ***Inform examinee that steps 2.8 through 2.11 have been completed.***				

END

ENTERGY OPERATIONS INCORPORATED
ARKANSAS NUCLEAR ONE

TITLE: **EMERGENCY DIESEL GENERATOR OPERATION**	DOCUMENT NO. **1104.036**	CHANGE NO. **048**
	WORK PLAN EXP. DATE **N/A**	
SET #	SAFETY-RELATED ☒YES ☐NO	IPTE ☐YES ☒NO
	TEMP MOD ☐YES ☒NO	LEVEL OF USE ☒ CONTINUOUS ☐ REFERENCE ☐ INFORMATIONAL
	PROGRAMMATIC EXCLUSION PER EN-LI-100 ☐YES ☒NO	

When you see these *TRAPS*

- Time Pressure
- Distraction/Interruption
- Multiple Tasks
- Over Confidence
- Vague or Interpretive Guidance
- First Shift/Last Shift
- Peer Pressure
- Change/Off Normal
- Physical Environment
- Mental Stress (Home or Work)

Get these *TOOLS*

- Effective Communication
- Questioning Attitude
- Placekeeping
- Self Check
- Peer Check
- Knowledge
- Procedures
- Job Briefing
- Coaching
- Turnover

VERIFIED BY	DATE	TIME

FORM TITLE:	FORM NO.	CHANGE NO.
VERIFICATION COVER SHEET	1000.006A	054

KEY

SUPPLEMENT 5

DG1 FUEL TRANSFER PUMP (P-16A) CAPACITY TEST

This test demonstrates operability of P-16A and components and partially satisfies TS 5.5.8 (ANO IST program requirements). Steps are provided for measuring P-16A capacity using the timed fill rate of the associated DG skid tank.

1.0 INITIAL CONDITIONS

1.1 Check the purpose of this test:

__A. Regularly scheduled 24-month test.

✓ B. Operability test following significant maintenance (describe maintenance performed in section 4.0).

__C. Other (describe in section 4.0).

1.2 In Mode 5 or Mode 6 or DG1 is inoperable.

NOTE

Day tank level may be lowered by draining fuel oil or securing transfer pumps while engine is running.

1.3 DG1 day tank level has been lowered to ~100 gallons.

1.4 Stop watch available. (Cal Due Date 10-08-08)

1.4.1 Record stopwatch M&TE number in section 3.0.

1.5 DG1 is idle.

1.6 IF ANY loads on MCC B55 and B56 are required to be operable, THEN verify MCC B55 and B56 powered from bus B6.

2.0 TEST METHOD

2.1 Verify DG1 Fuel Transfer Pump P-16A HS (HS-5211) on C107 in OFF.

2.2 Verify DG1 Engine Control Selector switch (HS-5234) on C107 in MAINT.

2.3 Record DG1 day tank level (should be ~100 gallons) at DG1 Fuel Oil Day Tank T-30A Level (LG-5218).

105 gallons

KEY

CAUTION

Manual operation of Fuel Transfer Pump can cause day tank to overflow.

2.4 Start P-16A by placing (HS-5211) on C107 in MANUAL.

2.4.1 Start the stopwatch when day tank T-30A level begins to rise.

2.5 Continue manual transfer until day tank level reaches ~200 gallons.

2.5.1 Monitor level continuously.

2.6 WHEN level is ~200 gallons, THEN perform the following:

2.6.1 Stop the watch.

2.6.2 Record actual T-30A level 200 gallons.

2.6.3 Stop P-16A using (HS-5211).

NOTE

Round fractions of a second to seconds and divide seconds by 60 to obtain fraction of minute (i.e.--15.02 seconds should be rounded to 15.0 seconds. 15/60=.25 minutes).

2.7 Calculate average flow rate by dividing tank level change (95 gals) by elapsed time for fill (9.68 minutes).

P-16A flow rate = 9.81 GPM.

2.7.1 Record in section 3.0.

2.8 Place P-16A HS (HS-5211) in AUTO.

2.9 Return DG1 Engine Control selector switch (HS-5234) on C107 to REMOTE.

2.10 Acknowledge or reset all local alarms.

2.11 Power MCC B55 and B56 as required by ES Electrical System Operation (1107.002).

KEY

3.0 ACCEPTANCE CRITERIA

3.1 Record values observed during P-16A testing AND compare with "Limiting Range For Operability."

TEST QUANTITY	INSTRUMENT	MEASURED VALUES	LIMITING RANGE FOR OPERABILITY	IS DATA WITHIN LIMITING RANGE? (CIRCLE YES OR NO)
P-16A flow	M&TE # SW-007	9.81 GPM	≥10 GPM	YES NO

3.2 IF "NO" is circled in above table, THEN perform the following:

- Declare P-16A inoperable.
- Notify SM.
- Verify a Condition Report initiated.

- Initiate corrective action.
- Reference Tech Spec for applicable Conditions and Required Actions.

Candidate should explain these actions to examiner

Performed by sign Operator Date/Time [todays date] [current time]

Review all calculations AND verify correct.

Reviewed and verified by (SRO) _____ Date _____

KEY

SUPPLEMENT 5

4.0 SHIFT MANAGER REVIEW AND ANALYSIS

(circle one)

4.1 Do all measured values recorded in the Acceptance Criteria section fall within the specified LIMITING RANGE FOR OPERABILITY? YES NO

4.2 IF answer to 4.1 is "NO", THEN describe action taken below.

This supplement is being performed to document operability of P16-A following complete rebuild under WO# 00017524

4.3 Has this equipment been proven operable per the ACCEPTANCE CRITERIA? YES NO

4.4 Have all the administrative requirements of this test been satisfied (i.e., all initial blocks initialed or N/A'd, all data entered, cal due dates listed, applicable signature spaces signed, etc.)? YES NO

SHIFT MANAGER _____ DATE _____

KEY

EXAMINEE'S COPY

JPM INITIAL TASK CONDITIONS:

- A surveillance test of DG1 Fuel Transfer Pump P-16A is in progress.
- Supplement 5 of 1104.036 up to step 2.6 is completed.

INITIATING CUE:

The CRS directs you to complete the surveillance test of P-16A in accordance with 1104.036, Supplement 5.

ENTERGY OPERATIONS INCORPORATED
ARKANSAS NUCLEAR ONE

TITLE: **EMERGENCY DIESEL GENERATOR OPERATION**	DOCUMENT NO. **1104.036**	CHANGE NO. **048**
	WORK PLAN EXP. DATE **N/A**	
SET #	SAFETY-RELATED ☒YES ☐NO	IPTE ☐YES ☒NO
	TEMP MOD ☐YES ☒NO	LEVEL OF USE ☒ CONTINUOUS ☐ REFERENCE ☐ INFORMATIONAL
	PROGRAMMATIC EXCLUSION PER EN-LI-100 ☐YES ☒NO	

When you see these ***TRAPS***	Get these ***TOOLS***
Time Pressure	**Effective Communication**
Distraction/Interruption	**Questioning Attitude**
Multiple Tasks	**Placekeeping**
Over Confidence	**Self Check**
Vague or Interpretive Guidance	**Peer Check**
First Shift/Last Shift	**Knowledge**
Peer Pressure	**Procedures**
Change/Off Normal	**Job Briefing**
Physical Environment	**Coaching**
Mental Stress (Home or Work)	**Turnover**

VERIFIED BY	DATE	TIME

FORM TITLE:	FORM NO.	CHANGE NO.
VERIFICATION COVER SHEET	**1000.006A**	**054**

RO Handout for Examinee

5.0 LIMITS AND PRECAUTIONS

5.1 If AC Lube Oil Soak Back Pump has not operated continuously, no planned fast start should be made (immediate acceleration to 900 RPM) unless the following are verified:

5.1.1 For DG1, if 90 minutes have elapsed since P-106A-2 ran, then verify the following:

- DG1 Main LO Upstream Supply Sightglass (SG-5270B) indicates full.
- E-197A Lube Oil Cooler Oil Return Sightglass (SG-5270C) indicates full.
- DG1 Lube Oil HX Outlet Temp (TI-5270) indicates >85°F.

  A. If TI-5270 indicates ≤85°F, refer to L&P 5.2.

5.1.2 For DG2, if 45 minutes have elapsed since P-106B-2 ran, then verify the following:

- DG2 Main LO Upstream Supply Sightglass (SG-5271B) indicates full.
- E-197B Lube Oil Cooler Oil Return Sightglass (SG-5271C) indicates full.
- DG2 Lube Oil HX Outlet Temp (TI-5271) indicates >85°F.

  A. If TI-5271 indicates ≤85°F, refer to L&P 5.2.

5.2 If DG1/DG2 Lube Oil HX Outlet Temp (TI-5270, TI-5271) indicates ≤85°F, then DG must not operate and affected DG engine control selector should be placed in MAINT, and DG declared unavailable and inoperable.

5.3 Any visible tubing vibrations during DG surveillances, or, water, air, or oil leaks are to be promptly reported. Elevated leaks may allow oil system to draw in air when shut down, draining pipes.

5.4 Diesel run time unloaded or at low load (<75%) should be minimized in order to prevent carbon fouling (improper combustion) and excessive turbocharger gear train wear.

5.5 During periods of known off-site electrical grid disturbances, neither diesel should be paralleled to the grid. This will prevent a loss of the diesel generator from protective relay actuation such as overload or reverse power.

5.6 When both diesel generators are in operation, do not tie them to the grid simultaneously. One DG shall be dedicated only to its ES bus. Otherwise a single grid electrical fault may cause a loss of both emergency diesel generators.

5.7 Governor booster pump tubing should be inspected for leaks during diesel run to prevent loss of governor-control oil pressure.

5.8 The Shift Manager (SM) shall be notified of any oil spill that has the potential of reaching Lake Dardanelle.

5.9 Do not attempt diesel generator restarts until engine has stopped (0 RPM).

5.10 Either the AC or DC soak back pump (P-106A-3 or P-106A-1 for DG1, P-106B-3 or P-106B-1 for DG2) must be operational before operating the diesel and must continue to operate a minimum of 30 minutes after the diesel is shutdown to cool the turbocharger bearings.

5.11 In parallel operation, maximum allowed reactive load is 1200 KVAR out and 500 KVAR in at full load.

5.12 Maximum current: 450 amps. Do not exceed except in emergency.

5.13 Maximum ambient temp for diesel operation is 122°F. Verify ventilation fans operate to maintain ambient temp < maximum allowed.

5.14 Maximum engine outlet water temperature is 205°F.

5.15 Minimum oil pressure is 26 psig when diesel is operating at 900 RPM.

5.16 Except for automatic starts and tests when opposite train components are inoperable, do not operate the diesel until all cylinders are cleared of water.

5.17 Do not operate the diesel unless service water is available for cooling.

5.18 The following values are given to help determine when diesel temperatures have stabilized, and are not intended to limit operation.

- Scavenging Pump Disc. Temp. - 190°F - 195°F
- Water Pump Suction Temp. - 155°F - 160°F
- Water Leaving Engine Temp. - 165°F - 175°F

5.19 The fuel oil filter bypass sightglass (farthest from the engine) should be empty in normal operation, if fuel oil is in this sightglass, the fuel oil filter should be changed.

5.20 The return fuel sightglass (nearer the engine) passes returning fuel from the injectors to the day tank. This sightglass should normally be full. Air bubbles in this sightglass with the fuel priming pump running and the engine stopped indicates air entering the suction of the pump. Bubbles appearing only when engine is running indicates leaky valves in fuel injectors. Little or no fuel in the sightglass indicates insufficient fuel to the engine.

5.21 To maintain the seven day requirement for one diesel, either procure additional fuel to allow both diesels to continue operation or shutdown one diesel within 50 hours.

5.22 A delay in opening output breaker at 100 KW when unloading a diesel may result in generator motoring which causes lockout relay to actuate and trip DG output breaker and shutdown the engine.

5.23 A delay in loading diesel after closing output breaker may result in generator motoring which causes lockout relay to actuate and trip DG output breaker and shutdown the engine.

5.24 Actions such as resetting, changing control switch positions, reconfiguring components, or attempting diesel restart after failure can cause loss of data useful in diagnosing problems and should be avoided if not an emergency.

5.25 If diesel generator is paralleled to the grid, adjusting either Unit 1 or Unit 2 Main Generator reactive loading may result in significant changes in EDG reactive loading.

5.26 All EDG start attempts shall be logged in the Station Log and recorded using EDG Start/Load/Run Information Sheet (Form 1104.036A).

5.27 The guidance and criteria for EDG failures is contained within Unit 1 EDG Reliability Program (1032.034). Ensure System Engineering is notified to verify requirements of 1032.034 are met for valid EDG failures.

5.28 If Emergency Stop PB on (C-107/C-108) was used to stop EDG, lockout relay on (A308/A408) will not reset until Reset (orange) PB for applicable EDG on local control panel (C-107/C-108) is depressed.

5.29 Over tightening cylinder cocks can cause damage to threads and sealing surfaces of drain cocks.

5.30 Efficient execution of the cylinder inleakage check while Engine Control HS is in MAINT will minimize accumulation of DG unavailability time.

6.0 SETPOINTS

6.1 Fuel storage tank low level alarm: 155".

- DG1 Emergency Diesel Fuel Tank T-57A Low Level (PDIS-5211)
- DG2 Emergency Diesel Fuel Tank T-57B Low Level (PDIS-5212)

6.2 Fuel transfer pump high discharge pressure alarm: 30 psig.

- DG1 Fuel Oil Transfer Pump P-16A Hi Disch Press (PSH-5211)
- DG2 Fuel Oil Transfer Pump P-16B Hi Disch Press (PSH-5212)

6.3 Fuel oil day tank high level limit switch: stops upstream fuel transfer pump at 18.75" tank level (240 gallons).

- DG1 Fuel Oil Day Tank T-30A Hi Level (LSH-5205)
- DG2 Fuel Oil Day Tank T-30B Hi Level (LSH-5210)

SUPPLEMENT 5

DG1 FUEL TRANSFER PUMP (P-16A) CAPACITY TEST

This test demonstrates operability of P-16A and components and partially satisfies TS 5.5.8 (ANO IST program requirements). Steps are provided for measuring P-16A capacity using the timed fill rate of the associated DG skid tank.

1.0 INITIAL CONDITIONS

1.1 Check the purpose of this test:

__A. Regularly scheduled 24-month test.

✓B. Operability test following significant maintenance (describe maintenance performed in section 4.0).

__C. Other (describe in section 4.0).

1.2 In Mode 5 or Mode 6 or DG1 is inoperable.

NOTE

Day tank level may be lowered by draining fuel oil or securing transfer pumps while engine is running.

1.3 DG1 day tank level has been lowered to ~100 gallons.

1.4 Stop watch available. (Cal Due Date 10-08-08)

1.4.1 Record stopwatch M&TE number in section 3.0.

1.5 DG1 is idle.

1.6 IF ANY loads on MCC B55 and B56 are required to be operable, THEN verify MCC B55 and B56 powered from bus B6.

2.0 TEST METHOD

2.1 Verify DG1 Fuel Transfer Pump P-16A HS (HS-5211) on C107 in OFF.

2.2 Verify DG1 Engine Control Selector switch (HS-5234) on C107 in MAINT.

2.3 Record DG1 day tank level (should be ~100 gallons) at DG1 Fuel Oil Day Tank T-30A Level (LG-5218).

105 gallons

CAUTION

Manual operation of Fuel Transfer Pump can cause day tank to overflow.

2.4 Start P-16A by placing (HS-5211) on C107 in MANUAL.

2.4.1 Start the stopwatch when day tank T-30A level begins to rise.

2.5 Continue manual transfer until day tank level reaches ~200 gallons.

2.5.1 Monitor level continuously.

2.6 WHEN level is ~200 gallons, THEN perform the following:

2.6.1 Stop the watch.

2.6.2 Record actual T-30A level 200 gallons.

2.6.3 Stop P-16A using (HS-5211).

NOTE

Round fractions of a second to seconds and divide seconds by 60 to obtain fraction of minute (i.e.--15.02 seconds should be rounded to 15.0 seconds. 15/60=.25 minutes).

2.7 Calculate average flow rate by dividing tank level change

(_____gals) by elapsed time for fill (_____minutes).

P-16A flow rate = _____GPM.

2.7.1 Record in section 3.0.

2.8 Place P-16A HS (HS-5211) in AUTO.

2.9 Return DG1 Engine Control selector switch (HS-5234) on C107 to REMOTE.

2.10 Acknowledge or reset all local alarms.

2.11 Power MCC B55 and B56 as required by ES Electrical System Operation (1107.002).

3.0 ACCEPTANCE CRITERIA

3.1 Record values observed during P-16A testing AND compare with "Limiting Range For Operability."

TEST QUANTITY	INSTRUMENT	MEASURED VALUES	LIMITING RANGE FOR OPERABILITY	IS DATA WITHIN LIMITING RANGE? (CIRCLE YES OR NO)
P-16A flow	M&TE # 5W0007	GPM	≥10 GPM	YES NO

3.2 IF "NO" is circled in above table, THEN perform the following:

- Declare P-16A inoperable.
- Notify SM.
- Verify a Condition Report initiated.

- Initiate corrective action.
- Reference Tech Spec for applicable Conditions and Required Actions.

Performed by _____ Operator Date/Time _____

Review all calculations AND verify correct.

Reviewed and verified by (SRO) _____ Date _____

SUPPLEMENT 5

4.0 SHIFT MANAGER REVIEW AND ANALYSIS

(circle one)

4.1 Do all measured values recorded in the Acceptance Criteria section fall within the specified LIMITING RANGE FOR OPERABILITY? YES NO

4.2 IF answer to 4.1 is "NO", THEN describe action taken below.

This supplement is being performed to document operability of P16A following complete rebuild under WO# 00017524

4.3 Has this equipment been proven operable per the ACCEPTANCE CRITERIA? YES NO

4.4 Have all the administrative requirements of this test been satisfied (i.e., all initial blocks initialed or N/A'd, all data entered, cal due dates listed, applicable signature spaces signed, etc.)? YES NO

SHIFT MANAGER _____ DATE _____

A4. Radiation Control

M/R

K/A 2.3.4

Knowledge of radiation exposure limits under normal or emergency conditions

A1JPM-RO-DOSE-SVY2

JOB PERFORMANCE MEASURE

Unit: 1 Rev # 2 Date: 6/26/2008

TUOI NUMBER: A1JPM-RO- DOSE-SVY2

System/Duty Area: Administrative Topic-Radiation Control

Task: Calculate Stay times for yourself and another operator

KA Value RO 3.2 SRO 3.7 KA Reference 2.3.4

☒ SRO

Approved For Administration To: RO _____ _____

Task Location: Inside CR: _____ Outside CR: _____ Both: ☒

Suggested Testing Environment And Method (Perform Or Simulate): Perform

Plant Site: _____ Simulator: _____ Lab: Perform _____

Position Evaluated: X SRO: _____

RO: _____

Actual Testing Environment: Plant Site: _____ Lab X _____

Simulator: _____

Testing Method: Perform: X

Simulate: _____

Approximate Completion Time In Minutes: 15 Minutes

Reference(S) HP Survey Map of P36C, Pump Room 54.

Examinee's Name: _____ SSN: _____

Evaluator's Name: _____

The Examinee's performance was evaluated against the standards contained in this JPM and is determined to be:

Satisfactory: _____ Unsatisfactory: _____

Performance Checklist Comments:

_____

_____

Start Time _____ Stop Time _____ Total Time _____

Signed _____ Date: _____

Signature indicates this JPM has been compared to its applicable procedure by a qualified individual (not the examinee) and is current with that revision.

THE EXAMINER SHALL REVIEW THE FOLLOWING WITH THE EXAMINEE:

The examiner shall review the "Briefing Checklist - System Walkthrough" portion of OP 1064.023 Attachment 6 with the examinee.

JPM INITIAL TASK CONDITIONS:

You are an WCO with the plant at full power. A hot spot has developed on Makeup PUMP P36C. You and another WCO will be working in the vicinity of the reduction gear assembly in order to flush the lines and reduce the hot spot radiation field.

Using the supplied survey map, determine the individual stay times **for yourself AND the other WCO** without exceeding the annual administrative dose limit (Ignore dose received during transit). You have an accumulated annual Whole Body dose of 1905 mR (ANO records). The other WCO has an accumulated annual Whole Body dose of 1790 mR (ANO records). No additional dose has been received at any other site.

Also, calculate stay times if the air in the pump room was contaminated with a level of 0.29 DAC (stochastic) assuming no respirators are used.

Calculations should be based on ANO Unit 1 Administrative dose limits. **Provide answers with 3 significant figures (example 4.51 hours).** Do not consider ALARA task requirements. Any required dose extensions have been processed and approved.

TASK STANDARD:

The examinee has correctly determined the stay times for himself and the other WCO on the assignment.

TASK PERFORMANCE AIDS:

HP Survey map of P36C Pump Room, Room number 54.

SIMULATOR SETUP:

N/A

INITIATING CUE: Determine the Stay time for you and the other WCO on the job. Also determine the stay time if the air in the pump room was contaminated with a level of 0.29 DAC (stochastic) assuming no respirators are used. **Provide answers with 3 significant figures (example 4.51 hours).**

CRITICAL ELEMENTS (c): 1,2, and 3

C	PERFORMANCE CHECKLIST	STANDARD	N/A	SAT	UN SAT
C	1. Determine the HIGHEST general area dose rate in the area of the reduction gear assembly to be used from the survey map.	Examinee has determined the HIGHEST general area dose rate in the area of the reduction gear assembly to be used from the survey map of P36C pump room. (80 mR/hr)	___	___	___
C	2. Determine Stay time (to 3 significant figures) with no airborne contamination for both operators. **Key**: Max dose at ANO1 is 2000 mR AO1 has 1905mR, =>allowed dose 95mR AO2 has 1700mR, =>allowed dose 300mR $\frac{95mR}{80mR/hr}$ = 1.18 hr, $\frac{300mR}{80mR/hr}$ = 3.75 hr	Examinee has determined that the stay time for him/her is 1.18 hrs and the stay time for the other WCO is 3.75 hrs plus or minus 0.01 hours.	___	___	___
C	3. Determine Stay time(to 3 significant figures) WITH airborne contamination for both operators. 1DAC = 2.5mR/hr => 0.29DAC =>0.725mR/hr Total rate = 80mR/hr + 0.725mR/hr = 80.725mR/hr $\frac{95mR}{80.725mR/hr}$ = 1.17 hr $\frac{300mR}{80.725mR/hr}$ = 2.96 hr	Examinee has determined that the stay time for him/her is 1.17hrs and the stay time for the other WCO is 3.71 hrs plus or minus 0.01 hours.	___	___	___

EXAMINER'S CUE: This concludes the JPM.

END

EXAMINEE'S COPY

INITIAL CONDITIONS:

You are an WCO with the plant at full power. A hot spot has developed on Makeup PUMP P36C. You and another WCO will be working in the vicinity of the reduction gear assembly in order to flush the lines and reduce the hot spot radiation field.

Using the supplied survey map, determine the individual stay times **for yourself AND the other WCO** without exceeding the annual administrative dose limit (Ignore dose received during transit). You have an accumulated annual Whole Body dose of 1905 mR (ANO records). The other WCO has an accumulated annual Whole Body dose of 1700 mR (ANO records). No additional dose has been received at any other site.

Also calculate stay times if the air in the pump room was contaminated with a level of 0.29 DAC (stochastic) assuming no respirators are used.

Calculations should be based on ANO Unit 1 EN-RP-201 Administrative dose limits. **Provide answers with 3 significant figures (example 4.51 hours).** Do not consider ALARA task requirements. Any required dose extensions have been processed and approved.

INITIATING CUE:

Determine the Stay time for you and the other AO on the job. Also determine stay time if the air in the pump room was contaminated with a level of 0.29 DAC (stochastic) assuming no respirators are used. **Provide answers with 3 significant figures (example 4.51 hours).**

MAP NUMBER: 1A2-16 LOCATION: U1 AUX 335' EL. P36C PUMP ROOM, ROOM NUMBER 54

Aux building
posted: RM,RWPR

335 posted RA

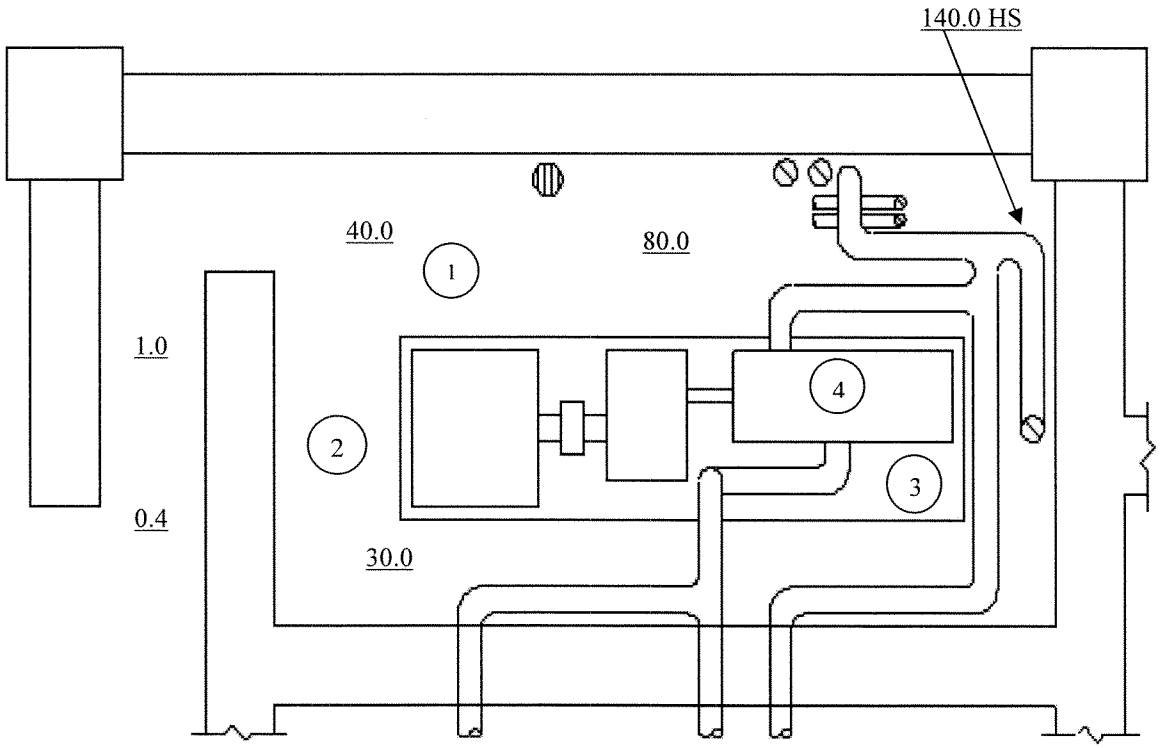

All Radiation values are in mrem/hour unless otherwise noted.
12.5 denotes gamma general area dose rates.
Smear contamination values are in DPM/100 Sqcm unless otherwise noted.
*12/13 Denotes Gamma Contact/Far reading (30 cm)
* 12 Denotes contact dose rate (gamma) *12 B Denotes Beta Contact Dose Rate
Form to be retained for records

H. S. Denotes Hot Spot Readings
O Denotes smear location (100 sqcm.)
☐ Denotes large area smear location

Smear Data

DPM/ 100cm2

No.	Activity
1	20,000
2	30,000
3	60,000
4	10,000

Alpha Smears
DPM/100cm2

No.	Activity

Rx. % 100
Date 09/10/2008
Time 0000:00

Dose Rate Inst. HP-DR-170

Cal Due Date 12/31/2008

Dose Rate Inst. #2 RM-065

Cal Due Date 12/31/2008

Count Inst. RO-705

Cal Due Date 12/31/2008

Bkg. 80 cpm D/C 10

Count Inst. #2

Cal Due Date 12/31/2008

Bkg. 90 cpm D/C 10

Survey Frequency:
_____ Daily
_____ Bi-Weekly
X Monthly
_____ Quarterly
_____ Job Coverage
_____ Other

RWP # 4005/1

Surveyor:
John Public 1234
Badge

RP Supervisor Review:

Imma N. Charge

DANI # 011256

Page 1 of 1

A1. Conduct of Operations

D/R

K/A 2.1.23

Ability to perform specific system and integrated plant procedures during all modes of plant operation

A1JPM-SRO-HTBAL1

UNIT: 1 REVISION # 0 DATE: _____

TUOI NUMBER: A1JPM-SRO-HTBAL1

SYSTEM: A.1 – Conduct of Operations

TASK: Review a Manual Heat Balance Calculation

JTA: ANO-SRO-ADMIN-NORM-200

KA VALUE RO 2.9 SRO 4.0 KA REFERENCE: 2.1.12

APPROVED FOR ADMINISTRATION TO: RO _____ SRO X

TASK LOCATION: INSIDE CR: _____ OUTSIDE CR: _____ BOTH: X

SUGGESTED TESTING ENVIRONMENT AND METHOD (PERFORM OR SIMULATE):

PLANT SITE: _____ SIMULATOR: PERFORM LAB: _____

POSITION EVALUTED: RO _____ SRO X

ACTUAL TESTING ENVIRONMENT: PLANT SITE: _____ SIMULATOR: X LAB: _____

ACTUAL TESTING METHOD: SIMULATE: _____ PERFORM: X

APPROXIMATE COMPLETION TIME IN MINUTES: 45 MINUTES

REFERENCES: 1103.016 Heat Balance Calculation

EXAMINEE'S NAME: _____ SSN: _____

EVALUATOR'S NAME: _____

THE EXAMINEE'S PERFORMANCE WAS EVALUATED AGAINST THE STANDARDS CONTAINED IN THIS JPM AND IS DETERMINED TO BE:

SATISFACTORY: _____ UNSATISFACTORY: _____

PERFORMANCE CHECKLIST COMMENTS: _____

START TIME: _____ STOP TIME: _____ TOTAL TIME: _____

SIGNED: _____ DATE: _____

SIGNATURE INDICATES THIS JPM HAS BEEN COMPARTED TO ITS APPLICABLE PROCEDURE BY A QUALIFIED INDIVIDUAL (NOT THE EXAMINEE) AND IS CURRENT WITH THAT REVISION.

THE EXAMINER SHALL REVIEW THE FOLLOWING WITH THE EXAMINEE:

The examiner shall review the "Briefing Checklist - System Walkthrough" portion of 1064.023 Attachment 6 with the examinee.

JPM INITIAL TASK CONDITIONS: It is desired to verify the accuracy of the PMS calculated Rx Thermal Power (XPP) in order to ensure compliance with Technical Specification SR 3.3.1.2.
The CBOT has completed 1103.016, Heat Balance Calculation, and calculated Rx thermal power to be 101.483%.
NI's are reading an average of 99.1%. The CBOT's math has been verified to be correct by an extra RO.

TASK STANDARD: The examinee has correctly identified three of four errors in Heat Balance Calculation.

TASK PERFORMANCE AIDS: Copies of completed 1103.016.

INITIATING CUE:

- Review the operator's completed 1103.016 and complete section 11.0.
- In addition, verify compliance with Technical Specification SR 3.3.1.2. .

CRITICAL ELEMENTS (C): 1, 3

(C)	PERFORMANCE CHECKLIST	STANDARDS	N/A	SAT	UNSAT
NOTE: Provide examinee with a copy of completed 1103.016. Examinee may state initially that the as performed Heat Balance would require adjustment of NI's to be in compliance with Tech Spec SR 3.3.1.2.					
(C)	1. Review 1103.016.	Examinee reviewed 1103.016. Examinee discovered three of four errors in calculations. 1. Step 2.4 value used for Q losses was taken from step 2.2 vs. 2.3. 2. Step 2.5 a value of 600 was given for HHA instead of real value. 3. Step 2.5 value used for Q losses was taken from step 2.2 vs. 2.3. 4. Step 2.6 % full power calculation is incorrect due to above errors.			
	2. Instruct CBOT to re-perform 1103.016.	Examinee stated that 1103.016 should be re-performed.			
NOTE: Inform examinee that 1103.016 has been re-performed and calculated Rx thermal power is 99.99%.					
(C)	3. Verify compliance with Technical Specification surveillance SR 3.3.1.2.	Examinee concludes that SR 3.3.1.2 as recalculated Rx thermal power is within 2% of initial NI readings.			

END

ENTERGY OPERATIONS INCORPORATED
ARKANSAS NUCLEAR ONE

TITLE: HEAT BALANCE CALCULATION	DOCUMENT NO. 1103.016	CHANGE NO. 012
	WORK PLAN EXP. DATE N/A	TC EXP. DATE N/A
SET #	SAFETY-RELATED ☒YES ☐NO	IPTE ☐YES ☒NO
	TEMP ALT ☐YES ☒NO	LEVEL OF USE ☒ CONTINUOUS ☐ REFERENCE ☐ INFORMATIONAL
	PROGRAMMATIC EXCLUSION PER EN-LI-100 ☐YES ☒NO	

When you see these ***TRAPS***	Get these ***TOOLS***
Time Pressure	**Effective Communication**
Distraction/Interruption	**Questioning Attitude**
Multiple Tasks	**Placekeeping**
Overconfidence	**Self Check**
Vague or Interpretive Guidance	**Peer Check**
First Shift/Last Shift	**Knowledge**
Peer Pressure	**Procedures**
Change/Off Normal	**Job Briefing**
Physical Environment	**Coaching**
Mental Stress (Home or Work)	**Turnover**

VERIFIED BY	DATE	TIME

FORM TITLE:	FORM NO.	CHANGE NO.
VERIFICATION COVER SHEET	1000.006A	053

KEY

2.4 Secondary Side Heat Balance

Q_{SECA} = Loop A Secondary Power

$$Q_{SECA} = \frac{(H_{STMA} - H_{FWA}) \times F_{FWA}}{3412142 \text{ Btu/HrMW}}$$

$$Q_{SECA} = \frac{(1243.313 - 447.89) \text{ BTU/Hr} \times 5491.643 \times 10^3 \text{ Lbm/Hr}}{3412142 \text{ Btu/HrMW}}$$

Q_{SECA} = 1280.1868 MW

Q_{SECB} = Loop B Secondary Power

$$Q_{SECB} = \frac{(H_{STMB} - H_{FWB}) \times F_{FWB}}{3412142 \text{ Btu/HrMW}}$$

$$Q_{SECB} = \frac{(1249.863 - 447.897) \text{ BTU/Hr} \times 5529.993 \times 10^3 \text{ Lbm/Hr}}{3412142 \text{ Btu/HrMW}}$$

Q_{SECB} = 1299.7309 MW

$\%FP_{SEC}$ = Secondary Calculated Heat Balance Power

$$\%FP_{SEC} = \frac{(Q_{SECA} + Q_{SECB} + Q_{LOSSES}) \times 100\%}{2568 \text{ MW}}$$

$$\%FP_{SEC} = \frac{(1280.1868 + 1299.7309 + 21.10 \text{ (Step 2.3)}) \text{ MW} \times 100\%}{2568 \text{ MW}}$$

$\%FP_{SEC}$ = 101.286 %

99.98 % ← Can Value

Value is from step 2.2 not 2.3

-KEY-

2.5 Primary Side Heat Balance

Q_{PRIA} = Loop A Primary Power

$$Q_{PRIA} = \frac{(H_{HA} - H_{CA}) \times F_{RCSA}}{3412142 \text{ Btu/HrMW}}$$

Correct value 615.85

$$Q_{PRIA} = \frac{(600 - 555.6233) \text{ BTU/Hr} \times 7254 \times 10^6 \text{ Lbm/Hr}}{3412142 \text{ Btu/HrMW}}$$

Incorrect value

Q_{PRIA} = 943.42 MW

Correct value 1280.38

Q_{PRIB} = Loop B Primary Power

$$Q_{PRIB} = \frac{(H_{HB} - H_{CB}) \times F_{RCSB}}{3412142 \text{ Btu/HrMW}}$$

$$Q_{PRIB} = \frac{(616.45 - 555.7633) \text{ BTU/Hr} \times 73.09 \times 10^6 \text{ Lbm/Hr}}{3412142 \text{ Btu/HrMW}}$$

Q_{PRIB} = 1299.94 MW

$\%FP_{PRI}$ = Primary Calculated Heat Balance Power

$$\%FP_{PRI} = \frac{(Q_{PRIA} + Q_{PRIB} + Q_{LOSSES}) \times 100\%}{2568 \text{ MW}}$$

$$\%FP_{PRI} = \frac{(943.42 + 1299.94 + 21.10) \text{ MW} \times 100\%}{2568 \text{ MW}}$$

Wrong value

$\%FP_{PRI}$ = 88.179 %

SAME mistake as in 2.4

~~100~~ 100.005 % correct value

-KEY-

2.6 Best Estimate of Reactor Power

$$\text{Alpha} = \frac{(\%FP_{SEC} - 15)}{85}$$

$$\text{Alpha} = \frac{(\underset{\text{(step 2.4)}}{101.286} - 15)}{85}$$

Alpha = 1.015

.9998 correct value

%FP = Best Estimate Calculated Thermal Power

$$\%FP = (\text{Alpha} \times \%FP_{SEC}) + [(1-\text{Alpha}) \times \%FP_{PRI}]$$

$$\%FP = (\underset{\text{.9998 correct value}}{1.015} \times \underset{\text{(Step 2.4)}}{101.286}) + [(1 - \underset{.9998}{1.015}) \times \underset{\text{(Step 2.5)}}{88.179}]$$

99.98 100.005

%FP = 101.433

99.98 % correct value

Incorrect due to previous errors and is not representation of Actual power

- KEY -

SURVEILLANCE		FREQUENCY
SR 3.3.1.2	----------NOTES---------- 1. Adjust power range channel output if the absolute difference is > 2% RTP. 2. Not required to be performed until 24 hours after THERMAL POWER is ≥ 20% RTP. ---------- Compare results of calorimetric heat balance calculation to power range channel output.	96 hours <u>AND</u> Once within 24 hours after a THERMAL POWER change of ≥ 10% RTP
SR 3.3.1.3	----------NOTES---------- 1. Adjust the power range channel imbalance output if the absolute value of the imbalance error is ≥ 2% RTP. 2. Not required to be performed until 24 hours after THERMAL POWER is ≥ 20% RTP. ---------- Compare results of out of core measured AXIAL POWER IMBALANCE to incore measured AXIAL POWER IMBALANCE.	31 days
SR 3.3.1.4	Perform CHANNEL FUNCTIONAL TEST.	31 days
SR 3.3.1.5	----------NOTE---------- Neutron detectors are excluded from CHANNEL CALIBRATION. ---------- Perform CHANNEL CALIBRATION.	18 months

KEY

JPM INITIAL TASK CONDITIONS:

- It is desired to verify the accuracy of the PMS calculated Rx Thermal Power (XPP) in order to ensure compliance with Technical Specification SR 3.3.1.2.
- The CBOT has completed 1103.016, Heat Balance Calculation, and calculated Rx thermal power to be 101.483%
- NI's are reading an average of 99.1%.
- The CBOT's arithmetic has been verified to be correct by an extra RO.

INITIATING CUE:

- Review the operator's completed 1103.016 and complete section 11.0.
- In addition, verify compliance with Technical Specification SR 3.3.1.2.

ENTERGY OPERATIONS INCORPORATED
ARKANSAS NUCLEAR ONE

TITLE: HEAT BALANCE CALCULATION	DOCUMENT NO. 1103.016	CHANGE NO. 012
	WORK PLAN EXP. DATE N/A	TC EXP. DATE N/A
SET #	SAFETY-RELATED ☒YES ☐NO	IPTE ☐YES ☒NO
	TEMP ALT ☐YES ☒NO	LEVEL OF USE ☒ CONTINUOUS ☐ REFERENCE ☐ INFORMATIONAL
	PROGRAMMATIC EXCLUSION PER EN-LI-100 ☐YES ☒NO	

When you see these ***TRAPS***	Get these ***TOOLS***
Time Pressure	**Effective Communication**
Distraction/Interruption	**Questioning Attitude**
Multiple Tasks	**Placekeeping**
Overconfidence	**Self Check**
Vague or Interpretive Guidance	**Peer Check**
First Shift/Last Shift	**Knowledge**
Peer Pressure	**Procedures**
Change/Off Normal	**Job Briefing**
Physical Environment	**Coaching**
Mental Stress (Home or Work)	**Turnover**

VERIFIED BY	DATE	TIME

FORM TITLE:	FORM NO.	CHANGE NO.
VERIFICATION COVER SHEET	1000.006A	053

SRO Handout for Examinee

TABLE OF CONTENTS

		Page
1.0	PURPOSE	2
2.0	SCOPE	2
3.0	DESCRIPTION	2
4.0	REFERENCES	3
4.1	REFERENCES USED IN PROCEDURE PREPARATION	3
4.2	REFERENCES USED IN CONJUNCTION WITH THIS PROCEDURE	3
4.3	NRC COMMITMENTS	3
5.0	TEST EQUIPMENT, SPECIAL TOOLS AND SUPPLIES	3
6.0	LIMITS AND PRECAUTIONS	3
7.0	SETPOINTS	3
8.0	PREREQUISITES/INITIAL CONDITIONS	4
9.0	INSTRUCTIONS	4
10.0	ACCEPTANCE CRITERIA	5
11.0	RESTORATION AND CHECKOUT	5
12.0	SUPERVISORY REVIEW	5
13.0	ATTACHMENTS AND FORMS	5
13.1	ATTACHMENT 1 - Glossary of Symbols and Constants Used in Manual Heat Balance Calculation	6
13.2	ATTACHMENT 2 - Manual Heat Balance Calculation	7
13.3	FIGURE 1 - Primary Subcooled Enthalpy	22
13.4	FIGURE 2 - Secondary Subcooled Enthalpy Chart	23
13.5	FIGURE 3 - Superheat Enthalpy Chart	24
13.6	FIGURE 4 - RCS Density Correction Factor	25
13.7	FIGURE 5 - Feedwater Venturi Thermal Expansion Correction Factor	26
13.8	FIGURE 6 - Feedwater Density Correction Factor	27

1.0 PURPOSE

To provide procedures for calculating heat balances that may be used for:

1.1 An approximation of reactor power.

1.2 An independent check of plant computer calculations.

1.3 Calibrate nuclear instrumentation if the computer is not available.

1.4 An independent check of the plant computer calculations to be used during startup physics testing.

2.0 SCOPE

2.1 This procedure applies to the Unit 1 power range instrumentation. It provides a standard to which the out-of-core instrumentation can be compared and calibrated.

2.2 This procedure can be used to determine calorimetric heat balance calculations when the plant computer is unavailable. Thus, this procedure can be performed to partially satisfy SR 3.3.1.2.

3.0 DESCRIPTION

3.1 An approximation of reactor power may be obtained in the absence of plant computer calculations. The method consists of manual heat balance calculations of reactor power using panel indications and/or the SPDS computer.

3.2 The plant computer calculation of reactor power has an accuracy of 2 percent or better.

3.3 The initial conditions as defined under Steps 8.1 & 8.2 are required for the type of calculation desired.

3.4 The effects of instrumentation accuracy and heat losses are far lower at higher loads. It is recommended, therefore, that reactor power be as high as convenient, preferably 80 percent of full power or greater.

3.5 The accuracy of the calculation is also dependent on the source and method of reading data. The most accurate readings are obtained directly from the sensors using a digital voltmeter. Plant computer indication is almost as accurate, (the points are calibrated to 0.1%), especially since there is much less time lapse during data collection. Panel indications are the least accurate, and hence lend themselves best to multiple data sets.

3.6 Symbols and constants used in Manual Heat Balance are defined as described in Attachment 1.

4.0 REFERENCES

4.1 References Used In Procedure Preparation

4.1.1 Unit 1 Technical Specification 3.3.1 and SR 3.3.1.2

4.1.2 ASME Steam Tables

4.1.3 B&W Document #32-1236091-00 "ANO-1 Partial Pump Analysis"

4.1.4 TM A180.0310 Siemans Allis, Vertical Reactor Coolant Pump Motors.

4.1.5 TM B015.1360 Jeumont Schneider Industrie, Reactor Coolant Pump Motor

4.1.6 B&W Document 32-1236536-00, RC Pump Energy

4.1.7 CALC-87-D-1088-06, "Steady State Containment Temperature Mathematical Model," Rev 0.

4.1.8 CALC-98-E-0042-01, "Manual Heat Balance Uncertainty Analysis," Rev 0.

4.1.9 OP-1302.037, "Beginning of Cycle Heat Balance Initialization Procedure"

4.1.10 OP-1302.042, "Recalibration of Loop 'B' Primary Calorimetric at Non-BOC Conditions"

4.2 References Used In Conjunction With This Procedure

None.

4.3 NRC Commitments

None.

5.0 TEST EQUIPMENT, SPECIAL TOOLS AND SUPPLIES

None

6.0 LIMITS AND PRECAUTIONS

6.1 When using this procedure as a result of the loss of the plant computer, a conservative uncertainty factor is applied and will result in a calculated power significantly higher than actual power. Reduce power to 80%FP prior to performing this calculation to avoid a calculated power greater than 100%.

6.2 Calculations per this procedure should not be undertaken or used unless the plant is at a steady state power level. (This condition exists when feedwater flow is stable, there are no changes in power readings from out-of-core instrumentation or in the generator output meter in excess of ±2%, or as specified in the body of this procedure.)

7.0 SETPOINTS

None

8.0 PREREQUISITES/INITIAL CONDITIONS

8.1 Ensure steady state conditions as follows;

The Delta-TC H/A station set to balance feed flow between steam generators for either two or four RC pumps in service, or set to maintain Delta-TC within 3°F for three RC pumps in service.

- RCS T_{ave} stable ±1°F.
- Feedwater flow stable ±½% (54.5 Klbm/hr).
- No changes in MW demand.

8.2 The following parameters maintained in a steady state for a minimum of 18 minutes before data is taken:

- RCS Pressure
- RCS Flow
- Turbine header pressure
- Feedwater temperature

9.0 INSTRUCTIONS

NOTE

If using SPDS to perform the manual heat balance calculation, SPDS function 05, Option 4, may be used to obtain data. Some data will be required to be obtained from panel indication as they are not available on SPDS.

9.1 Take data required per data sheet (points indicated on Attachment 2). Wait at least six minutes between each set of data readings.

9.2 Perform calculations using Attachment 2

9.2.1 Refer to Attachment 1 for naming conventions and descriptions.

9.2.2 The final heat balance equation is weighted as follows:

Between 0 and 15 percent power, only the primary heat balance is considered. From 15 percent to full power, the heat balance is weighted linearly with only the secondary heat balance being considered at full power. Therefore, at full power, the primary heat balance is not considered at all.

9.3 The value obtained by this method for Reactor Power should be compared with the value obtained from the plant computer calculation for Reactor Power, if available.

9.4 Calculated reactor power from Attachment 2;

%FP = 101.483 %

9.5 Reactor power calculated by either the plant monitoring system (PMS) or SPDS;

XPP = 99.99 % or

NI1LP = N/A %

10.0 ACCEPTANCE CRITERIA

None

11.0 RESTORATION AND CHECKOUT

None

PERFORMED BY: Scott Cooper Date/Time _____

REVIEWED BY: _____ Date/Time _____

12.0 SUPERVISORY REVIEW AND APPROVAL

APPROVED BY: _____ Date/Time _____
Reactor Eng. Supt. or Ops Supervision

13.0 ATTACHMENTS AND FORMS

13.1 Attachment 1 - Glossary of Symbols and Constants Used in Manual Heat Balance Calculation

13.2 Attachment 2 - Manual Heat Balance Calculation

13.3 FIGURE 1 - Primary Subcooled Enthalpy

13.4 FIGURE 2 - Secondary Subcooled Enthalpy Chart

13.5 FIGURE 3 - Superheat Enthalpy Chart

13.6 FIGURE 4 - RCS Density Correction Factor

13.7 FIGURE 5 - Feedwater Venturi Thermal Expansion Correction Factor

13.8 FIGURE 6 - Feedwater Density Correction Factor

ATTACHMENT 1

GLOSSARY OF SYMBOLS AND CONSTANTS USED IN
MANUAL HEAT BALANCE CALCULATIONS

SYMBOL	TERM	UNITS
%FP	Percent of Reactor Full Power (100% Power = 2568 MW)	%
$\%FP_{PRI}$	Percent Core Thermal Power Primary	%
$\%FP_{SEC}$	Percent Core Thermal Power Secondary	%
WMBTU	Conversion factor for converting BTU/Hr to MW. 3412142	(BTU/Hr)/MW
F_{RCSA}	Reactor Coolant Flow Loop A	Lbm/Hr
F_{RCSB}	Reactor Coolant Flow Loop B	Lbm/Hr
F_{FWA}	Main Feedwater Flow Loop A	Lbm/Hr
F_{FWB}	Main Feedwater Flow Loop B	Lbm/Hr
F_{LD}	Letdown Flow Lbm/Hr	Lbm/Hr
F_{LDG}	Letdown Flow GPM	GPM
H_{CA}	Enthalpy of RCS Cold Leg Loop A	BTU/Lbm
H_{CB}	Enthalpy of RCS Cold Leg Loop B	BTU/Lbm
H_{FWA}	Enthalpy of A Main Feedwater	BTU/Lbm
H_{FWB}	Enthalpy of B Main Feedwater	BTU/Lbm
H_{HA}	Enthalpy of RCS Hot Leg Loop A	BTU/Lbm
H_{HB}	Enthalpy of RCS Hot Leg Loop B	BTU/Lbm
H_{LD}	Enthalpy of Letdown	BTU/Lbm
H_{MU}	Enthalpy of Makeup and Seal Injection	BTU/Lbm
H_{STMA}	Enthalpy of A Steam Generator Outlet	BTU/Lbm
H_{STMB}	Enthalpy of B Steam Generator Outlet	BTU/Lbm
P_{FWA}	A Main Feedwater Pressure	PSIG
P_{FWB}	B Main Feedwater Pressure	PSIG
P_{HA}	Loop A RCS Hot Leg Pressure	PSIG
P_{HB}	Loop B RCS Hot Leg Pressure	PSIG
P_{STMA}	A Steam Generator Header Pressure	PSIG
P_{STMB}	B Steam Generator Header Pressure	PSIG
Q_{PRI}	Core Thermal Power Primary Calculation	MW
Q_{SEC}	Core Thermal Power Secondary Calculation	MW
Q_{LOSSES}	Summation of RCS Energy Gains and Losses	MW
Q_{MULD}	Energy of Letdown and Makeup	MW
Q_{RCP}	Energy of the Reactor Coolant Pumps	MW
Q_{RB}	Energy lost from the RCS insulation to the Reactor Building. 5.385×10^6 BTU/Hr @ RB average temperature 110 °F.	MW
T_{CA}	Loop A RCS Cold Leg Temperature	°F
T_{CB}	Loop B RCS Cold Leg Temperature	°F
T_{HA}	Loop A RCS Hot Leg Temperature	°F
T_{HB}	Loop B RCS Hot Leg Temperature	°F
T_{FWA}	A Main Feedwater Temperature	°F
T_{FWB}	B Main Feedwater Temperature	°F
T_{STMA}	A Steam Generator Outlet Temperature	°F
T_{STMB}	B Steam Generator Outlet Temperature	°F
D_{RCSA}	Density Correction of RCS Hot Leg Loop A	
D_{RCSB}	Density Correction of RCS Hot Leg Loop B	
D_{FWA}	Density Correction of Feedwater Loop A	
D_{FWB}	Density Correction of Feedwater Loop B	
E_{FWA}	Thermal Expansion Correction for Feedwater Venturi Loop A	
E_{FWB}	Thermal Expansion Correction for Feedwater Venturi Loop B	
Alpha	Linear Weighted Average of Secondary Power	

ATTACHMENT 2

MANUAL HEAT BALANCE

NOTE

N/A variables for which data is not required or is not available.

NOTE

Wait at least 6 minutes between each set of data readings.

DESCRIPTION	VARIABLE	INDICATOR	* LOCATION	1ST READING	2ND READING	3RD READING	AVERAGE
Loop A RCS Flow	F_{RCSA}	XWRCAA	PMS	72.55	72.53	72.54	72.54 Mlbm/hr
		F1028	SPDS				
		FI-1028	C03				
Loop B RCS Flow	F_{RCSB}	XWRCBA	PMS	73.07	73.12	73.08	73.09 Mlbm/hr
		F1037	SPDS				
		FI-1037	C03				
Enthalpy Loop A T-hot	H_{HA}	XHOUTA	PMS	615.75	615.84	615.96	615.85 BTU/Lbm
		N/A	SPDS	N/A	N/A	N/A	N/A
		N/A	PANEL				
Enthalpy Loop B T-hot	H_{HB}	XHOUTB	PMS	616.37	616.39	616.59	616.45 BTU/Lbm
		N/A	SPDS	N/A	N/A	N/A	N/A
		N/A	PANEL				
Enthalpy Loop A T-cold	H_{CA}	XHINA	PMS	555.57	555.62	555.68	555.623 BTU/Lbm
		N/A	SPDS	N/A	N/A	N/A	N/A
		N/A	PANEL				
Enthalpy Loop B T-cold	H_{CB}	XHINB	PMS	555.75	555.65	555.89	555.76 BTU/Lbm
		N/A	SPDS	N/A	N/A	N/A	N/A
		N/A	PANEL				
Note 1 Loop A T-hot	T_{HA}	XTOUTA	PMS	N/A			°F
		T1011	SPDS				
		TI-1011	C03				
Note 1 Loop B T-hot	T_{HB}	XTOUTB	PMS				°F
		T1039	SPDS				
		TI-1039	C03				
Note 1 Loop A T-cold	T_{CA}	XTINA	PMS				°F
		T1015	SPDS				
		TI-1015	C03				
Note 1 Loop B T-cold	T_{CB}	XTINB	PMS				°F
		T1048	SPDS				
		TI-1046	C03				

* Readings need only be taken from one location. Locations are listed in order of instrument accuracy. Circle location used.

Note 1: If Enthalpy values are available, N/A this variable.

ATTACHMENT 2

DESCRIPTION	VARIABLE	INDICATOR	* LOCATION	1ST READING	2ND READING	3RD READING	AVERAGE
Note 1		XPRESS	PMS				PSIA
Loop A		P1023	SPDS				
RCS Pressure	P_{HA}	PR-1023	C04		N/A		PSIG
Note 1		XPRESS	PMS				PSIA
Loop B		P1038	SPDS				
RCS Pressure	P_{HB}	PR-1038	C04				PSIG
	F_{LD}	XWLTDN	PMS	52.05	52.08	52.11	52.08 KLbm/Hr
Makeup/		F1236	SPDS				
Letdown Flow	F_{LDG}	FI-1236	C04				GPM
		XHINB	PMS	555.75	555.65	555.89	555.76 BTU/LBM
Enthalpy		N/A	SPDS	N/A	N/A	N/A	N/A
Letdown	H_{LD}	N/A	PANEL				
		XWFWAC	PMS				
A Main		F2628	SPDS	5486.88	5494.81	5493.24	5491.643 KLbm/Hr
Feedwater Flow	F_{FWA}	FI-2628	C03				MLbm/Hr
		XWFWBC	PMS				
B Main		F2678	SPDS	5525.44	5536.98	5527.56	5529.993 KLbm/Hr
Feedwater Flow	F_{FWB}	FI-2678	C03				MLbm/Hr
Note 1		XTFWA	PMS				
A MFW		N/A	SPDS				
Temperature	T_{FWA}	TI-2629	C13				°F
Note 1		XTFWB	PMS				
B MFW		N/A	SPDS		N/A		
Temperature	T_{FWB}	TI-2679	C13				°F
Note 1		XPFIDA	PMS				PSIA
A MFW		P2837	SPDS				
Pressure	P_{FWA}	PI-2837	R34				PSIG
Note 1		XPFIDB	PMS				PSIA
B MFW		P2829	SPDS				
Pressure	P_{FWB}	PI-28299	R35				PSIG
		XHFWA	PMS	447.78	447.95	447.94	447.89 BTU/LBM
Enthalpy		N/A	SPDS	N/A	N/A	N/A	N/A
A MFW	H_{FWA}	N/A	PANEL				
		XHFWB	PMS	447.79	447.94	447.96	447.897 BTU/LBM
Enthalpy		N/A	SPDS	N/A	N/A	N/A	N/A
B MFW	H_{FWB}	N/A	PANEL				
		XHSTMA	PMS	1243.43	1243.21	1243.3	1243.313 BTU/LBM
Enthalpy		N/A	SPDS	N/A	N/A	N/A	N/A
A Main Steam	H_{STMA}	N/A	PANEL				

* Readings need only be taken from one location. Locations are listed in order of instrument accuracy. Circle location used.

Note 1: If Enthalpy values are available, N/A this variable.

ATTACHMENT 2

DESCRIPTION	VARIABLE	INDICATOR	* LOCATION	1ST READING	2ND READING	3RD READING	AVERAGE
Enthalpy B Main Steam	H_{STMB}	XHSTMB	PMS	1249.99	1249.65	1249.95	1249.83 BTU/LBM
		N/A	SPDS	N/A	N/A	N/A	N/A
		N/A	PANEL				
Note 1 A Main Steam Temperature	T_{STMA}	XTSTA	PMS				
		N/A	SPDS				
		TI-2681	C03				°F
Note 1 B Main Steam Temperature	T_{STMB}	XTSTB	PMS		N/A		
		N/A	SPDS				
		TI-2631	C03				°F
Note 1 A Main Steam Pressure	P_{STMA}	XPSTA	PMS				PSIA
		P2618B	SPDS				
		PI-2652	C03				PSIG
Note 1 B Main Steam Pressure	P_{STMB}	XPSTB	PMS				PSIA
		P2667B	SPDS				
		PI-2602	C03				PSIG
Reactor Power	% FP	XPP	PMS				
		NI1LP	SPDS	99.93	100.06	99.98	99.99 PCT. (%)
		NR-0514	C03				
Note 2 PRI-SEC correction factor (A)	FlowCorr A	CWRCA	PMS	1.0487	1.0487	1.0487	
		N/A	SPDS				
		N/A	C03	N/A	N/A	N/A	N/A
Note 2 PRI-SEC correction factor (B)	FlowCorr B	CWRCB	PMS	1.0473	1.0473	1.0473	
		N/A	SPDS				
		N/A	C03	N/A	N/A	N/A	N/A

* Readings need only be taken from one location. Locations are listed in order of instrument accuracy. Circle location used.

Note 1: If Enthalpy values are available, N/A this variable.

Note 2: The primary to secondary flow correction factor constants are only needed for the SPDS/control panel calculation and are therefore directly included. These constants are cycle specific values calculated using references 4.1.9 and 4.1.10.

INITIALS

1.0 INITIAL CONDITIONS

1.1 ΔT H/A Station Set Per 8.1 — SRP

1.2 RCS Tave Stable ±1°F — SRP

1.3 Feedwater Flow Stable ±1/2% (54.5 KLbm/hr) — SRP

1.4 No Changes in MW Demand — SRP

1.5 Verify the following parameters maintained in a Steady State Condition for at least 18 minutes prior to taking data. — SRP

- RCS Pressure
- RCS Flow
- Turbine header pressure
- Feedwater temperature

2.0 MANUAL HEAT BALANCE CALCULATION USING THE PLANT MONITORING SYSTEM (PMS)

NOTE

Two decimal place accuracy of calculated numbers is adequate.

2.1 Makeup and Letdown Energy Determination

The assumption is made that MU Flow = LD Flow and MU energy (H_{MU}) is constant at 75.41 BTU/Lbm.

$$Q_{MULD} = \frac{(H_{LD} - H_{MU}) \times F_{LD}}{\text{WMBTU}}$$

$$Q_{MULD} = \frac{(555.76 - 75.41)\text{BTU/Lbm} \times 52.08 \times 10^3 \text{ Lbm/hr}}{3412142 \text{ Btu/HrMW}}$$

Q_{MULD} = 7.332 MW

2.2 Reactor Coolant Pump Energy

The actual calculation for the Reactor Coolant Pump energy is √3 * Volts * AMPS * Motor Efficiency * cosF; with Motor Efficiency = 0.93 and cosF = 0.88. However, a constant of 18.0E6 BTU/hr per pump is used for pump energy input.

$$Q_{RCP} = \frac{\text{\# of Pumps Running x 18.0E6 BTU/hr}}{\text{3412142 Btu/HrMW}}$$

$$Q_{RCP} = \frac{4 \text{ x 18.0E6 BTU/hr}}{\text{3412142 Btu/HrMW}}$$

Q_{RCP} = 21.10 MW

2.3 Total Energy Loss/Gain

ANO Engineering Calculation 87-D-1088-06, has determined the energy loss to the Reactor Building to be 5.385E6 Btu/hr at a nominal Reactor Building temperature of 110 °F which equates to approximately 1.58 MW (Q_{RB}).

$Q_{LOSSES} = Q_{RB} + Q_{MULD} - Q_{RCP}$

Q_{LOSSES} = 1.58 MW + 7.332 MW (step 2.1) - 21.10 MW (step 2.2)

Q_{LOSSES} = -12.188 MW

2.4 Secondary Side Heat Balance

Q_{SECA} = Loop A Secondary Power

$$Q_{SECA} = \frac{(H_{STMA} - H_{FWA}) \times F_{FWA}}{3412142 \text{ Btu/HrMW}}$$

$$Q_{SECA} = \frac{(1243.313 - 447.89) \text{ BTU/Hr} \times 5491.643 \times 10^3 \text{ Lbm/Hr}}{3412142 \text{ Btu/HrMW}}$$

Q_{SECA} = 1280.1868 MW

Q_{SECB} = Loop B Secondary Power

$$Q_{SECB} = \frac{(H_{STMB} - H_{FWB}) \times F_{FWB}}{3412142 \text{ Btu/HrMW}}$$

$$Q_{SECB} = \frac{(1249.863 - 447.897) \text{ BTU/Hr} \times 5529.993 \times 10^3 \text{ Lbm/Hr}}{3412142 \text{ Btu/HrMW}}$$

Q_{SECB} = 1299.7309 MW

$\%FP_{SEC}$ = Secondary Calculated Heat Balance Power

$$\%FP_{SEC} = \frac{(Q_{SECA} + Q_{SECB} + Q_{LOSSES}) \times 100\%}{2568 \text{ MW}}$$

$$\%FP_{SEC} = \frac{(1280.1868 + 1299.7309 + 21.10) \text{ MW} \times 100\%}{2568 \text{ MW}}$$

(Step 2.3)

$\%FP_{SEC}$ = 101.286 %

2.5 Primary Side Heat Balance

Q_{PRIA} = Loop A Primary Power

$$Q_{PRIA} = \frac{(H_{HA} - H_{CA}) \times F_{RCSA}}{3412142 \text{ Btu/HrMW}}$$

$$Q_{PRIA} = \frac{(\underline{600} - \underline{555.6233}) \text{ BTU/Hr} \times \underline{72.54} \times 10^6 \text{ Lbm/Hr}}{3412142 \text{ Btu/HrMW}}$$

Q_{PRIA} = 943.42 MW

Q_{PRIB} = Loop B Primary Power

$$Q_{PRIB} = \frac{(H_{HB} - H_{CB}) \times F_{RCSB}}{3412142 \text{ Btu/HrMW}}$$

$$Q_{PRIB} = \frac{(\underline{616.45} - \underline{555.7633}) \text{ BTU/Hr} \times \underline{73.09} \times 10^6 \text{ Lbm/Hr}}{3412142 \text{ Btu/HrMW}}$$

Q_{PRIB} = 1299.94 MW

$\%FP_{PRI}$ = Primary Calculated Heat Balance Power

$$\%FP_{PRI} = \frac{(Q_{PRIA} + Q_{PRIB} + Q_{LOSSES}) \times 100\%}{2568 \text{ MW}}$$

$$\%FP_{PRI} = \frac{(\underline{943.42} + \underline{1299.94} + \underline{21.10}) \text{ MW} \times 100\%}{2568 \text{ MW}}$$

$\%FP_{PRI}$ = 88.179 %

2.6 **Best Estimate of Reactor Power**

$$\text{Alpha} = \frac{(\%FP_{SEC} - 15)}{85}$$

$$\text{Alpha} = \frac{(\underset{\text{(step 2.4)}}{\underline{101.286}} - 15)}{85}$$

Alpha = 1.015

%FP = Best Estimate Calculated Thermal Power

$$\%FP = (\text{Alpha} \times \%FP_{SEC}) + [(1-\text{Alpha}) \times \%FP_{PRI}]$$

$$\%FP = (\underline{1.015} \times \underset{\text{(Step 2.4)}}{\underline{101.286}}) + [(1 - \underline{1.015}) \times \underset{\text{(Step 2.5)}}{\underline{88.179}}]$$

%FP = 101.483

3.0 MANUAL HEAT BALANCE CALCULATION USING SPDS OR CONTROL PANEL INDICATION

NOTE

1) When using this procedure as a result of the loss of the plant computer, a conservative uncertainty factor is applied and will result in a calculated power significantly higher than actual power. Reduce power to 80%FP prior to performing this calculation to avoid a calculated power greater than 100%.

2) Two decimal place accuracy of calculated numbers is adequate.

3.1 Makeup and Letdown Energy Determination

The assumption is made that MU Flow = LD Flow and MU energy (H_{MU}) is constant at 75.41 BTU/Lbm.

Use **FIGURE 1 - Primary Subcooled Enthalpy Chart** to determine the Letdown enthalpy.

Letdown Temperature = RCS Loop B T-cold Temp. = T_{CB} = _____ °F

$$Q_{MULD} = \frac{(H_{LD} - H_{MU}) * F_{LDG} \times 500}{WMBTU}$$

$$Q_{MULD} = \frac{(\_\_\_\_\_ - 75.41)\text{BTU/Lbm} * \_\_\_\_\_ \text{gpm} \times 500}{3412142 \text{ Btu/HrMW}}$$

Lbm/hrGPM (Fig. 1)

Q_{MULD} = _____ MW

N/A

3.2 Reactor Coolant Pump Energy

The actual calculation for the Reactor Coolant Pump energy is √3 * Volts * AMPS * Motor Efficiency * cosF; with Motor Efficiency = 0.93 and cosF = 0.88. However, a constant of 18.0E6 BTU/hr per pump is used for pump energy input.

$$Q_{RCP} = \frac{\text{\# of Pumps Running} \times 18.0E6 \text{ BTU/hr}}{3412142 \text{ Btu/HrMW}}$$

$$Q_{RCP} = \frac{\_\_\_\_\_ \times 18.0E6 \text{ BTU/hr}}{3412142 \text{ Btu/HrMW}}$$

Q_{RCP} = _____ MW

3.3 **Total Energy Loss/Gain**

ANO Engineering Calculation 87-D-1088-06, has determined the energy loss to the Reactor Building to be 5.385E6 Btu/hr at a nominal Reactor Building temperature of 110 °F which equates to approximately 1.58 MW (Q_{RB}).

$Q_{LOSSES} = Q_{RB} + Q_{MULD} - Q_{RCP}$

Q_{LOSSES} = 1.58 MW + _____ MW - _____ MW
(step 3.1) (step 3.2)

Q_{LOSSES} = _____ MW

NA

3.4 **Secondary Side Heat Balance**

Q_{SECA} = **Loop A Secondary Power**

Use **FIGURE 3 - Superheat Enthalpy Chart** to determine enthalpy of the steam.

A Main Steam Temperature = T_{STMA} = _____ °F

H_{STMA} = _____ BTU/Lbm

A MFW Temperature = T_{FWA} = _____ °F

Use **FIGURE 2 - Secondary Subcooled Enthalpy Chart** to determine feedwater enthalpy.

H_{FWA} = _____ BTU/Lbm

Use **FIGURE 6 - Feedwater Density Correction Factor** to determine a density correction of the feedwater.

D_{FWA} = _____

Use **FIGURE 5 - Feedwater Venturi Thermal Expansion Correction Factor** to determine the thermal expansion correction.

E_{FWA} = _____ N/A

$$Q_{SECA} = \frac{(H_{STMA} - H_{FWA}) \times F_{FWA} \times D_{FWA} \times E_{FWA}}{3412142 \text{ Btu/HrMW}}$$

$$Q_{SECA} = \frac{(\underset{\text{(Fig. 3)}}{\_\_\_\_\_} - \underset{\text{(Fig. 2)}}{\_\_\_\_\_})\frac{\text{BTU}}{\text{Hr}} \times \_\_\_\_\_ \times **10^3\frac{\text{Lbm}}{\text{Hr}} \times \underset{\text{(Fig 6)}}{\_\_\_\_\_} \times \underset{\text{(Fig 5)}}{\_\_\_\_\_}}{3412142 \text{ Btu/HrMW}}$$

Q_{SECA} = _____ MW

** - Multiply by 10^6 Lbm/Hr if using control board indications;FI-2628 and FI-2678.

Q_{SECB} = **Loop B Secondary Power**

Use **FIGURE 3 - Superheat Enthalpy Chart** to determine enthalpy of the steam.

B Main Steam Temperature = T_{STMB} = _____ °F

H_{STMB} = _____ BTU/Lbm

B MFW Temperature = T_{FWB} = _____ °F

Use **FIGURE 2 - Secondary Subcooled Enthalpy Chart** to determine feedwater enthalpy.

H_{FWB} = _____ BTU/Lbm

Use **FIGURE 6 - Feedwater Density Correction Factor** to determine a density correction of the feedwater.

D_{FWB} = _____

Use **FIGURE 5 - Feedwater Venturi Thermal Expansion Correction Factor** to determine the thermal expansion correction.

E_{FWB} = _____

$$Q_{SECB} = \frac{(H_{STMB} - H_{FWB}) \times F_{FWB} \times D_{FWB} \times E_{FWB}}{3412142 \text{ Btu/HrMW}}$$

$$Q_{SECB} = \frac{(\underset{\text{(Fig. 3)}}{\_\_\_\_\_} - \underset{\text{(Fig. 2)}}{\_\_\_\_\_})\frac{\text{BTU}}{\text{Hr}} \times \_\_\_\_\_ \times **10^3 \frac{\text{Lbm}}{\text{Hr}} \times \underset{\text{(Fig 6)}}{\_\_\_\_\_} \times \underset{\text{(Fig 5)}}{\_\_\_\_\_}}{3412142 \text{ Btu/HrMW}}$$

Q_{SECB} = _____ MW

N/A

** - Multiply by 10^6 Lbm/Hr if using control board indications;FI-2628 and FI-2678.

$\%FP_{SEC}$ = Secondary Calculated Heat Balance Power

$$\%FP_{SEC} = \frac{(Q_{SECA} + Q_{SECB} + Q_{LOSSES}) \times 100\%}{2568\ MW}$$

$$\%FP_{SEC} = \frac{(\_\_\_\_\_ + \_\_\_\_\_ + \_\_\_\_\_)MW \times 100\%}{2568\ MW}$$

$\%FP_{SEC}$ = _____ %

3.5 Primary Side Heat Balance

Q_{PRIA} = Loop A Primary Power

Loop A T-hot Temperature = T_{HA} = _____ °F

Use **FIGURE 1 - Primary Subcooled Enthalpy Chart** to determine enthalpy of the RCS.

H_{HA} = _____ BTU/Lbm

Loop A T-cold Temperature = T_{CA} = N/A °F

H_{CA} = _____ BTU/Lbm

Use **FIGURE 4 - RCS Density Correction Factor** to determine a density correction of the RCS Hot Leg.

D_{RCSA} = _____

$$Q_{PRIA} = \frac{(H_{HA} - H_{CA}) \times F_{RCSA} \times D_{RCSA} \times FlowCorrA}{3412142\ Btu/HrMW}$$

$$Q_{PRIA} = \frac{(\underset{(Fig.\ 1)}{\_\_\_\_\_} - \underset{(Fig.\ 1)}{\_\_\_\_\_})\frac{BTU}{Hr} \times \_\_\_\_\_ \times 10^6\frac{Lbm}{Hr} \times \underset{(Fig.\ 4)}{\_\_\_\_\_} \times 1.0487}{3412142\ Btu/HrMW}$$

Q_{PRIA} = _____ MW

Q_{PRIB} = Loop B Primary Power

Loop B T-hot Temperature = T_{HB} = _____ °F

Use **FIGURE 1 - Primary Subcooled Enthalpy Chart** to determine enthalpy of the RCS.

H_{HB} = _____ BTU/Lbm

Loop B T-cold Temperature = T_{CB} = _____ °F

H_{CB} = _____ BTU/Lbm

Use **FIGURE 4 - RCS Density Correction Factor** to determine a density correction of the RCS Hot Leg.

D_{RCSB} = _____

$$Q_{PRIB} = \frac{(H_{HB} - H_{CB}) \times F_{RCSB} \times D_{RCSB} \times FlowCorrB}{3412142 \text{ Btu/HrMW}}$$

$$Q_{PRIB} = \frac{(\underset{\text{(Fig. 1)}}{\_\_\_\_\_} - \underset{\text{(Fig. 1)}}{\_\_\_\_\_})\frac{BTU}{Hr} \times \_\_\_\_\_ \times 10^6 \frac{Lbm}{Hr} \times \underset{\text{(Fig. 4)}}{\_\_\_\_\_} \times 1.0473}{3412142 \text{ Btu/HrMW}}$$

Q_{PRIB} = _____ MW

N/A

$\%FP_{PRI}$ = Primary Heat Balance Power

$$\%FP_{PRI} = \frac{(Q_{PRIA} + Q_{PRIB} + Q_{LOSSES}) * 100\%}{2568 \text{ MW}}$$

$$\%FP_{PRI} = \frac{(\_\_\_\_\_ + \_\_\_\_\_ + \_\_\_\_\_)\text{MW} * 100\%}{2568 \text{ MW}}$$

$\%FP_{PRI}$ = _____ %

3.6 **Best Estimate of Reactor Power**

$$\text{Alpha} = \frac{(\%FP_{SEC} - 15)}{85}$$

$$\text{Alpha} = \frac{(\underset{\text{(step 3.4)}}{\_\_\_\_\_} - 15)}{85}$$

Alpha = _____

$\%FP_B$ = Best Estimate of Calculated Thermal Power

$\%FP_B$ = (Alpha x $\%FP_{SEC}$) + [(1-Alpha) x $\%FP_{PRI}$]

$\%FP_B$ = (_____ x _____) + [(1 - _____) x _____]
(Step 3.4) (Step 3.5)

$\%FP_B$ = _____ N/A

NOTE

The following step applies a factor to conservatively bound this calculation for instrument uncertainty. This will result in a calculated value significantly higher than actual power. If using this procedure as a result of the loss of the plant computer, reduce power to 80%FP prior to performing this calculation to avoid a calculated power greater than 100%.

3.7 **Uncertainty Corrected Reactor Power**

$\%FP = \%FP_B + 20\ \%RTP$

%FP = (_____) + 20

%FP = _____

FIGURE 1 - Primary Subcooled Enthalpy Chart
for RCS Pressures between 2100 and 2200 psig

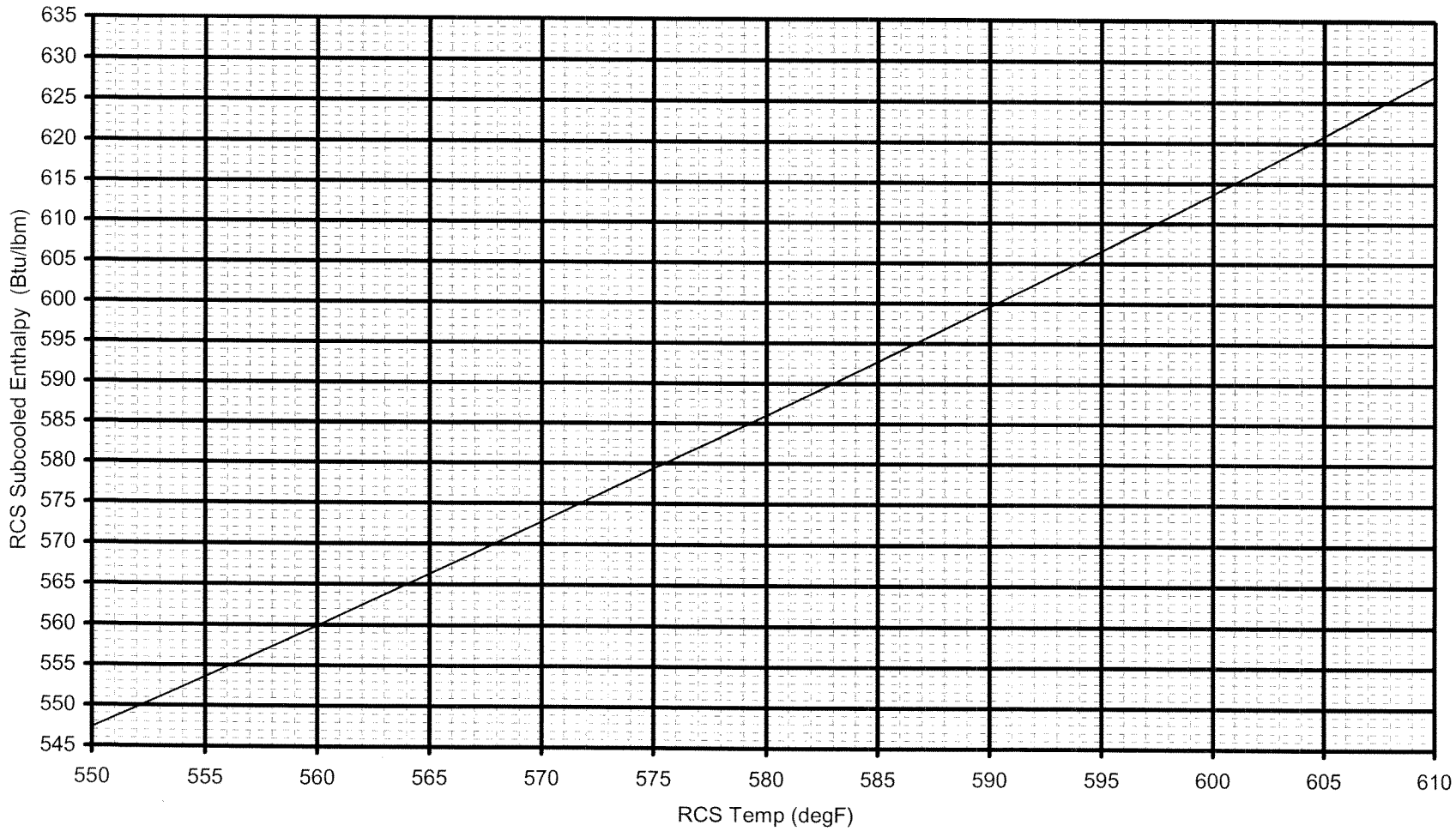

FIGURE 2 - Secondary Subcooled Enthalpy Chart
for Feed Water Pressures between 950 and 1150 psig

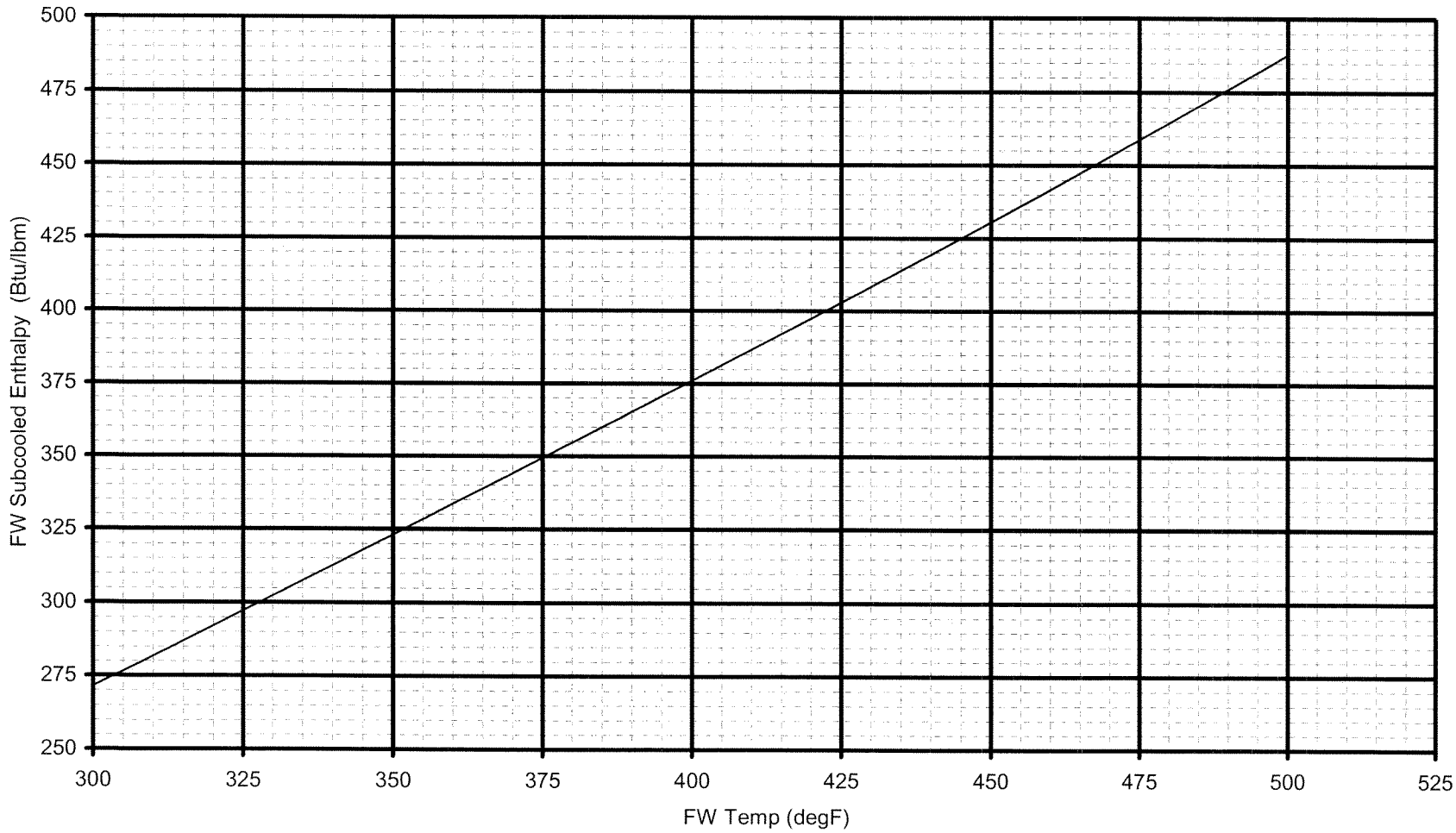

FIGURE 3 - Superheat Enthalpy Chart
for Main Steam Pressures between 890 and 920 psig

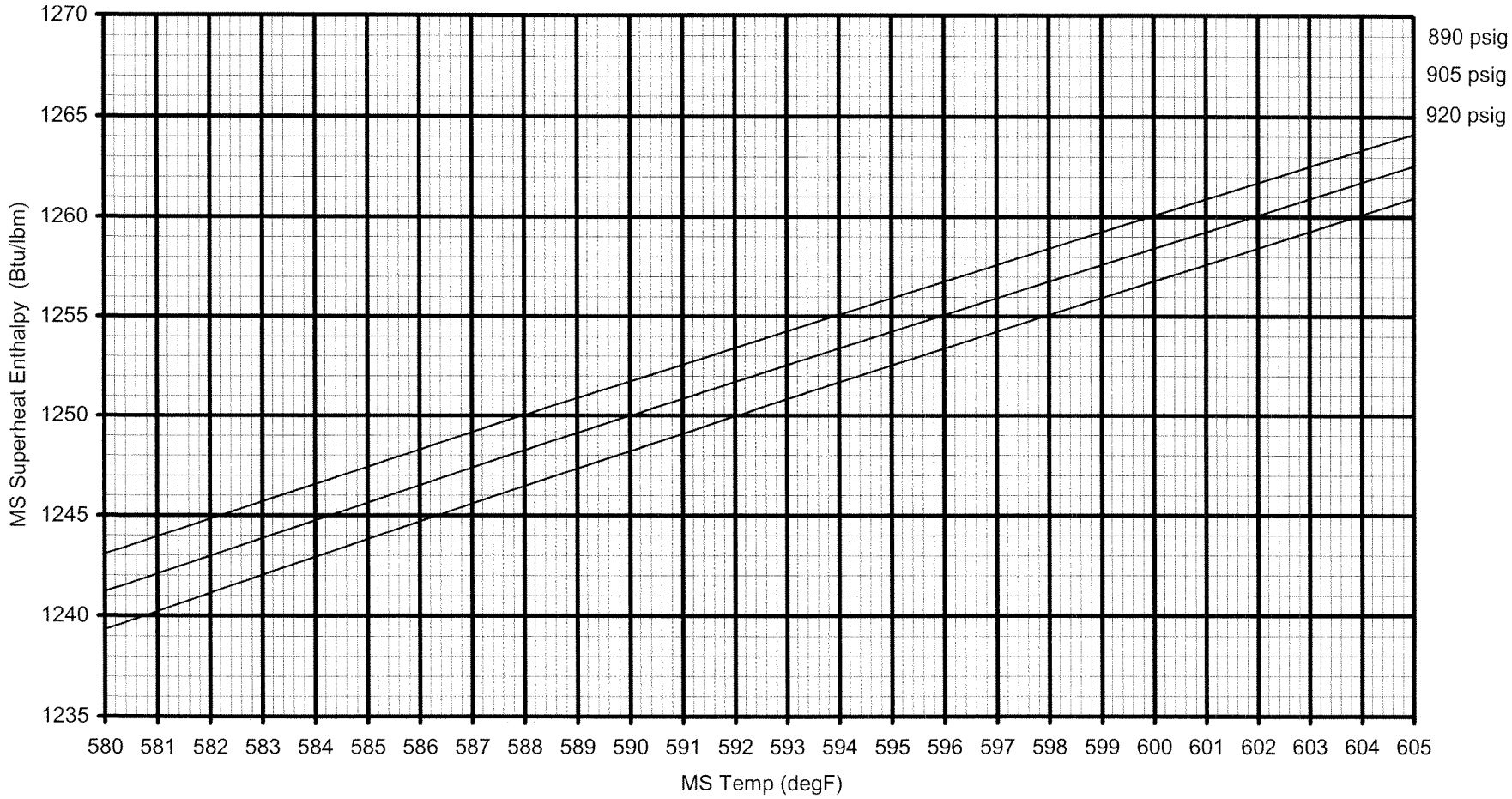

FIGURE 4 - RCS Density Correction Factor
for RCS Pressures between 2100 and 2200 psig

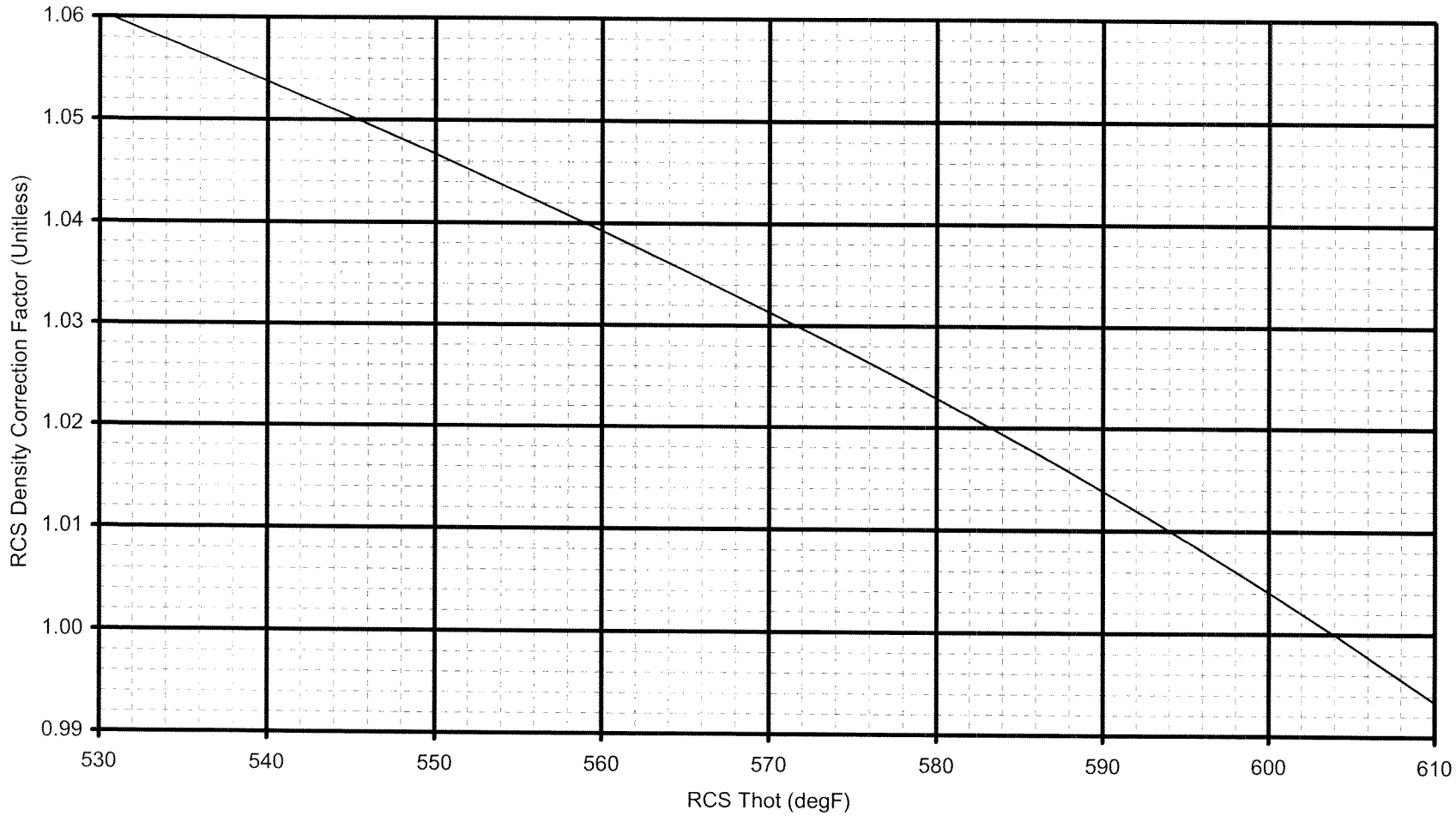

FIGURE 5 - Feed Water Venturi Thermal Expansion Correction Factor for Feed Water Pressures between 950 and 1150 psig

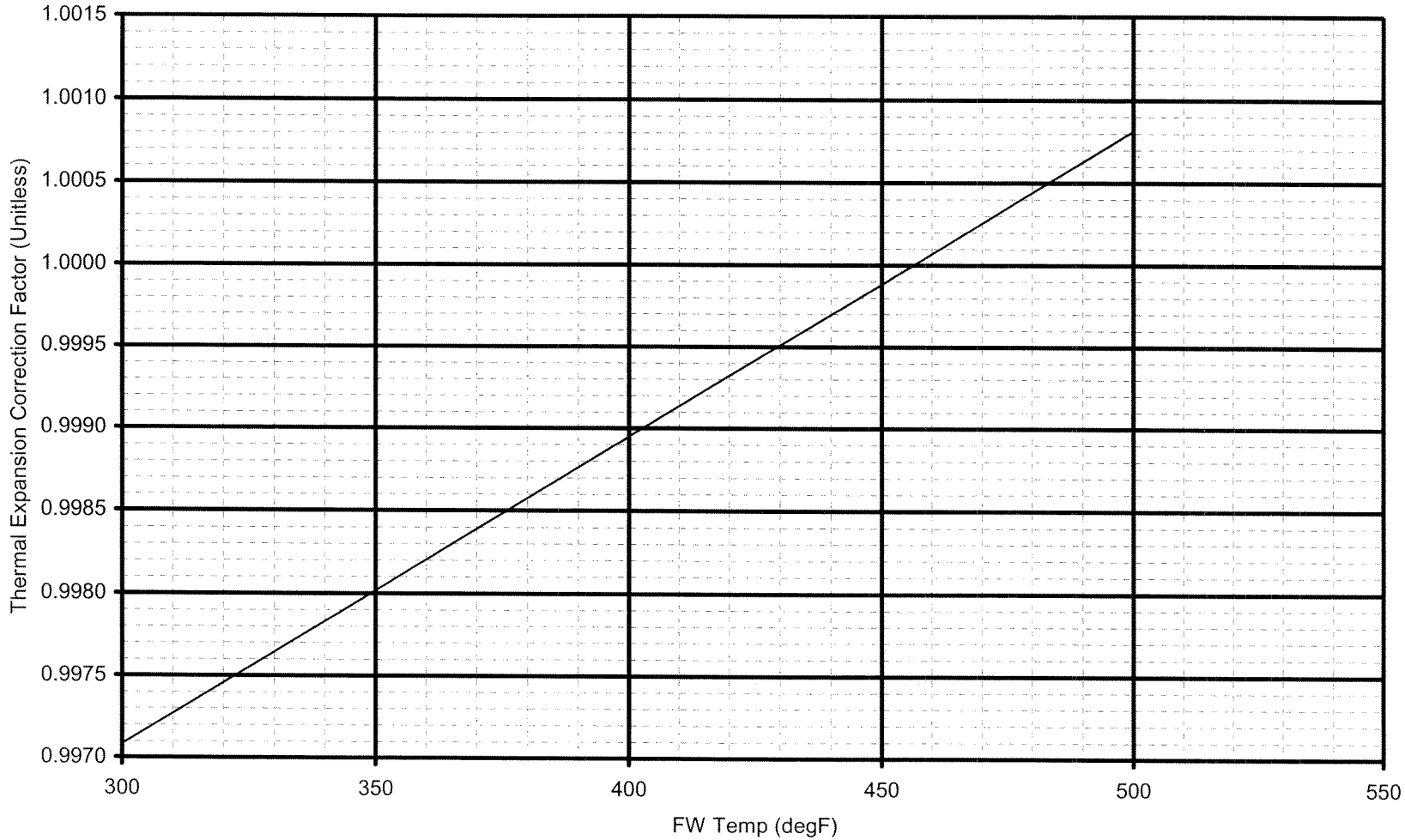

FIGURE 6 - Feed Water Density Correction Factor
for Feed Water Pressures between 950 and 1150 psig

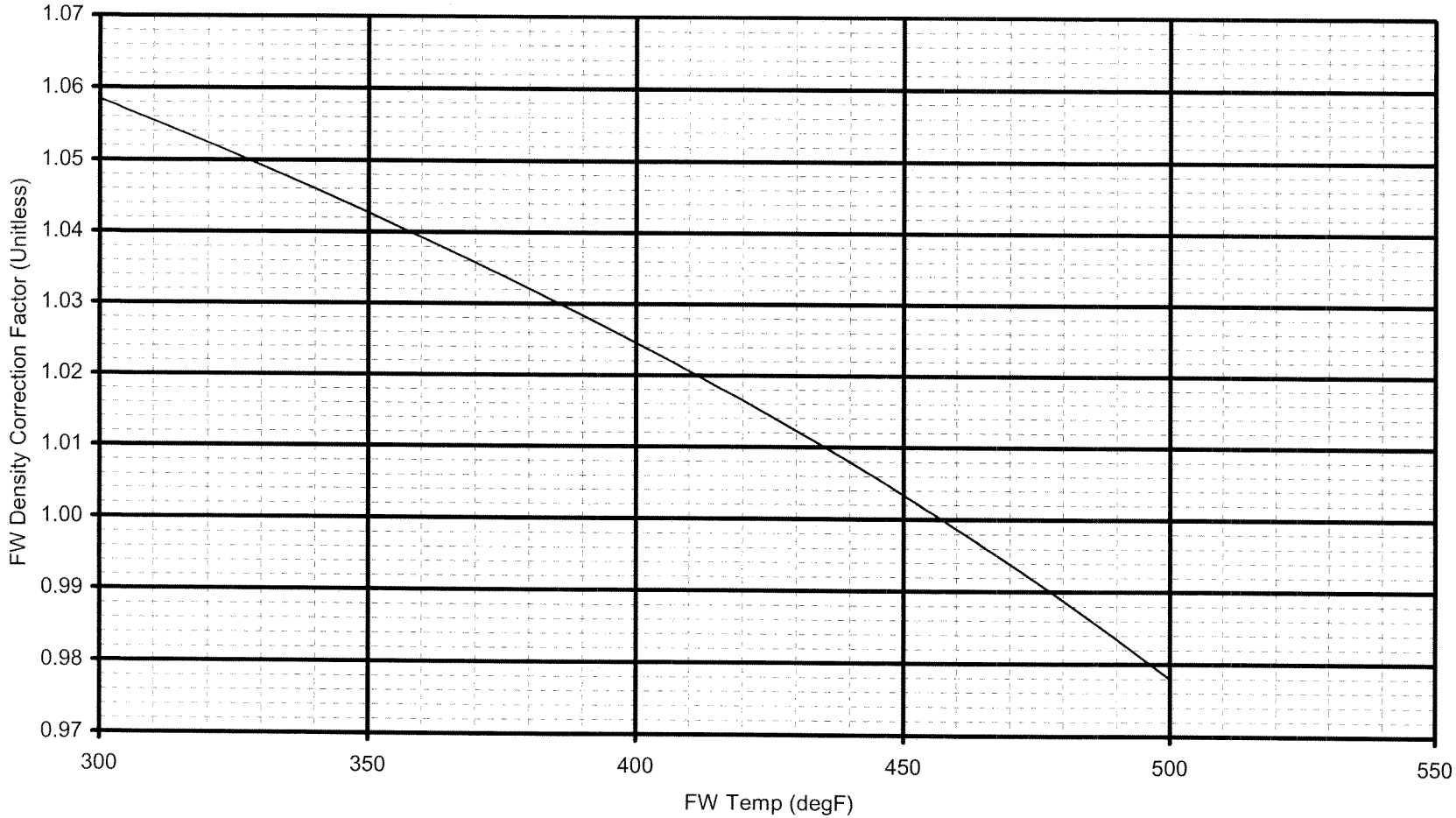

A2. Conduct of Operations

D/R

K/A 2.1.34

Knowledge of primary and secondary plant chemistry limits

A1JPM-SRO-CHEM1

ADMINISTRATIVE JOB PERFORMANCE MEASURE

TUOI: A1JPM-SRO-CHEM1

UNIT: 1 REV # 0 DATE: _____

TUOI NUMBER: A1JPM-SRO-CHEM1

SYSTEM/DUTY AREA: ADMINISTRATIVE TOPIC – CONDUCT OF OPERATIONS

TASK: Respond to secondary chemistry parameter out of specification

JTA#: ANO-SM-ADMIN-NORM-165

KA VALUE RO: 2.7 SRO: 3.5 KA REFERENCE: 2.1.34

APPROVED FOR ADMINISTRATION TO: RO: _____ SRO: X

TASK LOCATION: INSIDE CR: _____ OUTSIDE CR: _____ Classroom : X

SUGGESTED TESTING ENVIRONMENT AND METHOD (PERFORM OR SIMULATE):

PLANT SITE: _____ SIMULATOR: _____ Classroom: PERFORM

POSITION EVALUATED: RO: N/A SRO: X

ACTUAL TESTING ENVIRONMENT: SIMULATOR: ____ PLANT SITE: _____ Classroom: PERFORM

TESTING METHOD: SIMULATE: _____ PERFORM: X

APPROXIMATE COMPLETION TIME IN MINUTES: 15 MINUTES

REFERENCE(S): 1000.042 Steam Generator Water Chemistry Monitoring – Unit One

EXAMINEE'S NAME: _____ SSN _____-_____-_____

EVALUATOR'S NAME: _____

THE EXAMINEE'S PERFORMANCE WAS EVALUATED AGAINST THE STANDARDS CONTAINED IN THIS JPM AND IS DETERMINED TO BE:

SATISFACTORY: _____ UNSATISFACTORY: _____

PERFORMANCE CHECKLIST COMMENTS:

_____

_____

_____

_____ Start Time _____ Stop Time _____ Total Time

SIGNED _____ DATE: _____

SIGNATURE INDICATES THIS JPM HAS BEEN COMPARED TO ITS APPLICABLE PROCEDURE BY A QUALIFIED INDIVIDUAL (NOT THE EXAMINEE) AND IS CURRENT WITH THAT REVISION.

THE EXAMINER SHALL REVIEW THE FOLLOWING WITH THE EXAMINEE:

The examiner shall review the "Briefing Checklist - System Walkthrough" portion of OP 1064.023 Attachment 6 with the examinee.

JPM INITIAL TASK CONDITIONS: The plant has been operating at 100% for 215 days. The shift chemist has just arrived in your office and has given you, the Shift Manager, form 1000.042A to review.

TASK STANDARD: Examinee correctly recognizes that the threshold for Action Level 3 has been exceeded and the plant should be shutdown when value is exceeded for >2 hours.

TASK PERFORMANCE AIDS: 1000.042

INITIATING CUE:

As Shift Manager, review the 1000.042A form for out of specification Feedwater chlorides.

CRITICAL ELEMENTS (C)_____3_____

(C)	PERFORMANCE CHECKLIST	STANDARD	N/A	SAT	UNSAT
NOTE: Inform trainee that continuous monitor readings correspond with sample results.					
	1. Compare results of confirmatory analyses to readings from continuous monitors.	Requested readings of continuous monitors to compare with lab analyses results on 1000.042A.	____	____	____
NOTE: Inform trainee that Chemistry suspects a bad polisher to be the source of the chlorides.					
	2. Identify and isolate sources of impurity ingress.	Inquired as to results of searches for source of chloride in-leakage.	____	____	____
(C)	3. Refer to Attachment 3 1000.042.	Referred to Att. 6 and determined that Action Level 2 as shown on the form is incorrect and that Action Level 3 had been exceeded. Action Level 3 requires the plant to be shutdown if the value has been exceeded for >2 hours (typically within six hours) instead of the 100 hours allowed for Action Level 2.	____	____	____

END

EXAMINEE'S COPY

JPM INITIAL TASK CONDITIONS:

- The plant had been operating at 100% for 215 days.
- The shift chemist has just arrived in your office and has given you, the Shift Manager, form 1000.042A to review.

INITIATING CUE:

As Shift Manager, review the 1000.042A form for out of specification Feedwater chlorides.

EVENT DESCRIPTION High Chlorides in Feedwater A&B	OCCURRENCE DATE: 9/9/08	TIME: 0840	REACTOR POWER: 100 %
PLANT STATUS PRIOR TO OCCURRENCE	Power Operations		
COMPONENT OR SYSTEM AFFECTED	Feedwater A&B		
DESCRIPTION OF CONDITION	Chlorides >5 ppb		

PARAMTER	TEST RESULTS	LIMIT	PARAMTER	TEST RESULTS	LIMIT	PARAMTER	TEST RESULTS	LIMIT
A FW Chlorides	11.8	<5	B FW Chlorides	13.4	<5			

ACTION RECOMMENDATIONS

PROCEDURE REQUIREMENTS: 1000.042 page 4 of 31	PAGE NUMBER: 4
CHEMISTRY RECOMMENDATIONS: Return to below action level 2 within 100 hours	

MONTORING ACTIVITY

SAMPLING FREQUENCY: Daily		
TIME CLOCK ENDS: Saturday	DATE: 9/13/08	TIME: 1240
CHEMIST REPORTING OUT OF SPEC:Gary Petri	DATE: 9/9/08	TIME: 1130
☐ Hideout Return for planned outage. If marked, then Shift Manager reviews may be N/A. REVIEWED BY SHIFT MANAGER:	DATE:	TIME:

IN SPEC PARAMER	TEST RESULTS	LIMIT	DATE ____ TIME ____	IN SPEC PARAMETER	TEST RESULTS	LIMIT	DATE ____ TIME ____	IN SPEC PARAMETER	TEST RESULTS	LIMIT	DATE ____ TIME ____

CHEMIST VERFIYING IN SPEC. CONDITION:	DATE: TIME:	NOTES:

CORRECTIVE ACTION TAKEN BY OPERATIONS:

REVIEWED BY: SHIFT MANAGER:	DATE: TIME:

FORM TITLE	FORM NO.	CHANGE
UNIT 1 STEAM GENERATOR MONITORING REPORT	1000.042A	000-00-0

ENTERGY OPERATIONS INCORPORATED
ARKANSAS NUCLEAR ONE

TITLE: STEAM GENERATOR WATER CHEMISTRY MONITORING - UNIT ONE	DOCUMENT NO. 1000.042	CHANGE NO. 016
	WORK PLAN EXP. DATE N/A	TC EXP. DATE N/A
SET #	SAFETY-RELATED ☒YES ☐NO	IPTE ☐YES ☒NO
	TEMP ALT ☐YES ☒NO	LEVEL OF USE ☐ CONTINUOUS ☒ REFERENCE ☐ INFORMATIONAL
	PROGRAMMATIC EXCLUSION PER EN-LI-100 ☐YES ☒NO	

When you see these ***TRAPS***	Get these ***TOOLS***
Time Pressure	**Effective Communication**
Distraction/Interruption	**Questioning Attitude**
Multiple Tasks	**Placekeeping**
Overconfidence	**Self Check**
Vague or Interpretive Guidance	**Peer Check**
First Shift/Last Shift	**Knowledge**
Peer Pressure	**Procedures**
Change/Off Normal	**Job Briefing**
Physical Environment	**Coaching**
Mental Stress (Home or Work)	**Turnover**

VERIFIED BY	DATE	TIME

FORM TITLE:	FORM NO.	CHANGE NO.
VERIFICATION COVER SHEET	1000.006A	053

TABLE OF CONTENTS

Section No. Description Page No.

1.0 Purpose 2

2.0 Scope 2

3.0 References 2

4.0 Definitions 4

5.0 Responsibility and Authority 5

6.0 Instructions 6

7.0 Attachments and Forms 8

7.1 Attachments

7.1.1 Attachment 1, Modes 5 and 6 Cold Shutdown/Wet Layup (RCS ≤200°F) 9

7.1.2 Attachment 2, Mode 4 Hot Shutdown (RCS >200°F and <280°F) 11

7.1.3 Attachment 3, Mode 3 Hot Standby (RCS ≥280°F, Reactor not Critical) 14

7.1.4 Attachment 4, Mode 2 Startup (Reactor Critical at ≤5% Reactor Power) 17

7.1.5 Attachment 5, Mode 1 Power Operation (Reactor Power >5% and <15%) 20

7.1.6 Attachment 6, Mode 1 Power Operation (Reactor Power ≥15%) 23

7.1.7 Attachment 7, Cold Shutdown/Wet Layup Corrective Actions 27

7.1.8 Attachment 8, Hot Shutdown, Hot Standby, Startup, and Reactor Critical at <15% Reactor Power Corrective Actions 28

7.1.9 Attachment 9, Power Operation (≥15% Reactor Power) Corrective Actions 30

7.2 Forms

7.2.1 Form 1000.042A, Unit 1 Steam Generator Monitoring Report (electronic form)

1.0 PURPOSE

The purpose of this procedure is to identify a secondary water chemistry monitoring program to maximize the availability and operating life of major components such as the steam generators and the turbine.

2.0 SCOPE

The scope of this program is limited to:

2.1 Unit One;

2.2 Identification of a sampling schedule for the critical parameters and control points for these parameters;

2.3 Identification of the procedures used to measure the values of the critical parameters;

2.4 Identification of process sampling points;

2.5 Procedure for the recording and management of data;

2.6 Procedure defining corrective actions for off-control point chemistry conditions; and

2.7 A procedure identifying the authority responsible for the interpretation of the data and the sequence and timing of administrative events required to initiate corrective action.

3.0 REFERENCES

3.1 REFERENCES USED

3.1.1 Pressurized Water Reactor Secondary Water Chemistry Guidelines - Revision 6. EPRI TR-1008224, Revision 6, Final Report, December, 2004, prepared by PWR Secondary Water Chemistry Guidelines Revision 6 Committee

3.1.2 NEI 97-06, "Steam Generator Program Guidelines"

3.1.3 Babcock & Wilcox BAW-1385 Water Chemistry Manual

3.1.4 1052.002, Chemistry Forms

3.1.5 1605.002, Analyses Using the UV/VIS Spectrophotometer

3.1.6 1605.022, Determination of Dissolved Oxygen (Chemetrics Comparator Method)

3.1.7 1605.026, Operation of AA-SCAN 1 AA/AE Spectrophotometer

3.1.8 1605.027, Determination of Solids

3.1.9 1605.038, Determination of Hydrazine - High Range (Titration Method)

3.1.10 1605.063, Chemical Analysis Using the Ion Chromatograph

3.1.11 1605.077, Determination of Insoluble and Soluble Metals

3.1.12 1605.084, Operation of Portable Conductivity Meters

3.1.13 1606.017, Operation of the Orbisphere Oxygen Detectors

3.1.14 1606.042, Operation of Unit 1 Hydrazine Analyzers

3.1.15 1606.041, Operation of Unit 1 Inline Specific and Cation Conductivity Meters

3.1.16 1606.044, Operation of Unit 1 Inline pH Meters

3.1.17 1606.045, Operation of Unit 1 Leeds & Northrup Model 7931 Dissolved Oxygen Analyzers

3.1.18 1606.046, Operation of Unit 1 Sodium Analyzers

3.1.19 1606.049, Operation of the Dionex Series 8100 On-Line Ion Chromatograph

3.1.20 1606.050, Operation of B&W Corrosion Product Samplers

3.1.21 1618.002, Collecting Unit 1 Secondary Samples

3.1.22 1605.101, Operation of PerkinElmer Inductively Coupled Plasma Spectrometer

3.1.23 Unit 1 TS 5.5.10 a-f. Section 2.0 of this procedure states the license requirements.

3.1.24 Feedwater Oxygen Control, S.G. Sawochka, Nov 8, 1999

3.1.25 NMM EN-DC-317, Entergy Steam Generator Administrative Procedure

3.1.26 Framatome ANP, Inc. (AREVA), Operation and Maintenance Manual 01-5070437-00 for ANO-1 Enhanced Once-Through Steam Generators

3.1.27 1102.001, Plant Preheatup and Precritical Checklist

3.2 COMMITMENTS

None

4.0 DEFINITIONS

4.1 ACTION LEVEL 1 (Objective: To promptly identify and correct the cause of an out-of-guideline value without power reduction) - Corrective actions shall be implemented as soon as possible to return the parameter to within Action Level 1. If a parameter has not been returned to below the Action Level 1 value within one week following confirmation of an excursion, an engineering evaluation shall be performed to justify continuing to operate above Action Level 1.

4.2 Action Level 2 (Objective: To promptly identify and correct the cause of an out-of-guideline value prior to shutdown) - Corrective actions shall be implemented as soon as possible to return the parameter to below Action Level 2. If the parameter is not below the Action Level 2 value within 100 hours following confirmation of the excursion, the plant shall be in the hot standby condition within an additional 24 hours. An engineering evaluation shall be performed to assess the cause of exceeding an Action Level 2 value, and corrective actions taken to minimize the occurrence of such excursions prior to returning to power operation.

4.3 Action Level 3 (Objective: to correct a condition which is expected to result in rapid corrosion during continued operation. Plant shutdown may be necessary to minimize impurity ingress and limit exposure of steam generator, turbine and other secondary system materials to corrosive solutions. Plant shutdown will also reduce further damage to the steam generator by allowing cleanup of impurities as a result of hideout return.) - If a control parameter exceeds the Action Level 3 value for greater than 2 hours, or if at any time a control parameter exceeds 20 ppb for any duration, then the plant shall be taken to hot or cold shutdown as quickly as safe plant operation permits (typically <6 hours) and clean up by feed and bleed or drain and refill as appropriate until normal values are reached. Progressing to cold shutdown generally will be advisable to allow flushing of the upper regions of the once through steam generators (OTSG).

4.4 CONTINUOUS - A frequency where analyzer is normally in service unless it is in disrepair or undergoing maintenance.

4.5 INTEGRATED SAMPLE CONCENTRATION -

IF the composite samplers are in service,
THEN it is the concentration obtained by passing a known sample volume through special filters which are digested and analyzed later to calculate iron and copper concentrations in the bulk water.

IF the composite samplers are undergoing corrective maintenance,
THEN it is the average concentration of all grab sample results collected during the sampling period for the applicable parameter.

4.6 REACTOR MODES (as define by Unit 1 Technical Specifications):

Mode 1 (Power Operation) - Reactor critical ($K_{eff} \geq 0.99$) and rated thermal power >5.0%.

Mode 2 (Startup) - Reactor critical ($K_{eff} \geq 0.99$) and rated thermal power $\leq$ 5.0%.

Mode 3 (Hot Standby) - Reactor not critical ($K_{eff} \leq 0.99$) with the average reactor coolant temperature (degrees F) $\geq$ 280.

Mode 4 (Hot Shutdown) - Reactor not critical ($K_{eff} \leq 0.99$) with the average reactor coolant temperature (degrees F) > 200 but less than 280 and all reactor vessel head closure bolts fully tensioned.

Mode 5 (Cold Shutdown) - Reactor not critical ($K_{eff} \leq 0.99$) with the average reactor coolant temperature (degrees F) $\leq$ 200 and all reactor vessel head closure bolts fully tensioned.

Mode 6 (Refueling) - One or more reactor vessel head closure bolts less than fully tensioned.

4.7 SAMPLE SOURCES - Those points in the system from which a sample is drawn for analysis.

4.8 TREND - Chemistry data plotted versus time. Provides a rapid visual method of assessing plant chemistry.

5.0 RESPONSIBILITY AND AUTHORITY

5.1 GENERAL MANAGER, PLANT OPERATIONS

The General Manager, Plant Operations is responsible for overall implementation of this procedure.

5.2 SUPERINTENDENT, CHEMISTRY

The Superintendent, Chemistry is responsible for ensuring compliance with this procedure. The Superintendent, Chemistry or designee also determines if alternate sample locations are to be used when samples are not available in the Primary Sample Room due to insufficient motive force (temperature and pressure) during startup and shutdown evolutions. If a diagnostic parameter is listed without a stated sample frequency, the Superintendent, Chemistry or designee may determine a frequency to adequately assess the parameter's influence on system chemistry.

5.3 PLANT MANAGER, OPERATIONS; MANAGER, OPERATIONS; ANO-1/OPERATIONS STAFF

The Manager, Operations, ANO-1/Operations staff responsibilities include understanding the impact of chemistry conditions on major component performance, availability, and expected life; understanding the chemistry control program and the management support for the program; and establishment of corrective action priorities.

5.4 CHEMISTRY STAFF

The Chemistry staff responsibilities include understanding the goals for the program, implementation of the chemistry control program, timely and knowledgeable data review to identify unusual conditions quickly and evaluation to assess the underlying chemistry fundamentals, initiation of any required corrective actions, and making any necessary changes in the chemistry monitoring requirements to improve the chemistry control program.

5.5 MAINTENANCE STAFF

The Maintenance staff responsibilities include prompt and effective maintenance and repair of plant equipment required to maintain chemistry specifications.

5.6 PLANNING AND SCHEDULING PERSONNEL

The Planning and Scheduling personnel responsibilities include timely issuance of corrective maintenance required to maintain chemistry within specifications.

6.0 INSTRUCTIONS

6.1 A secondary chemistry monitoring program to maximize steam generator availability and operating life shall be carried out on the samples, parameters, and frequencies listed on Attachments 1 through 6 according to the status mode of the unit.

6.2 Sampling and analyses of the concerned parameters shall be performed using current approved procedures.

6.3 Analysis results shall be recorded on Form 1052.002A or in the Chemistry database.

6.4 Each parameter concerned with maximizing steam generator availability and operating life should be trended as a means of rapid visual assessment of plant chemistry.

6.5 Secondary Water Chemistry Reports shall be reviewed and compared to the normal parameter values listed on Attachments 1 through 6 according to the status mode and sample source.

6.6 IF an out-of-spec. condition is noted,
THEN request additional verification in the form of a confirmatory grab sample or obtain reading on another analyzer where possible within one hour of discovering the condition.

IF unusual conditions prevent resampling within one hour,
THEN a Nuclear Chemistry Supervisor should be notified and a resample planned as soon as possible. The time clock starts with the initial sample.

6.7 Out-of-spec. conditions shall be promptly reported to the Superintendent, Chemistry or a Nuclear Chemistry Supervisor and also to the Shift Manager. This notification shall be reported on Form 1000.042A.
IF the out of spec condition is due to hideout return during shutdown/cooldown for planned outages,
THEN the notification to the Shift Manager is not required.

6.8 The Superintendent, Chemistry; Nuclear Chemistry Supervisor and/or the Shift Manager shall proceed with a plan of corrective action to bring the parameter back into a normal value range. Typical corrective actions include:

6.8.1 Compare results of confirmatory analyses to readings from continuous monitors.

6.8.2 Increase steam generator drain and fill for removal of specific impurities. (This can only be done during certain startup periods.)

6.8.3 Identify and isolate sources of impurity ingress.

6.8.4 Compare results of various analyses for internal consistency.

6.8.5 Increase sample and analysis frequencies for short-term trending and confirmatory analyses of critical chemistry parameters where practical.

6.8.6 Refer to Attachments 7, 8, and 9 for corrective actions of specific parameters.

6.9 All values from analyses and instrument readings should be archived for long-term trending and review.

6.10 It is intended that inline chemistry analyzers are the principle method of monitoring secondary chemistry. Grab samples should be used for verification of the accuracy of inline analyzers.

6.11 IF an inline analyzer that is required for continuous monitoring is out-of-service for maintenance,
THEN a backup grab sample or portable meter reading should be obtained approximately every 6 hours. The grab sample can be omitted if the corresponding continuous analyzer on the opposite train is operable.

6.12 Test parameters that cannot be monitored because of laboratory equipment failures shall be evaluated for out-of-specification conditions by a Nuclear Chemistry Supervisor or designee. The determination shall be made by evaluating the data collected on other test parameters being monitored.

6.13 Outage maintenance plans should minimize the impact on the ability to recirculate and sample steam generators during periods of wet layup. Once steam generators are in wet layup and sample results indicate all parameters are within specifications, follow-up sample frequencies may be altered at the discretion of the Chemistry Superintendent or designee. This sample frequency change will only be allowed to accommodate maintenance windows.

NOTE

Step 6.14 does not apply to temporary loss of continuous monitoring for control parameters.

6.14 Deviation from control parameters in this procedure and/or the EPRI Guidelines require adequate technical justification. The technical justification shall meet the requirements listed in NMM EN-DC-317, "Entergy Steam Generator Administrative Procedure". A deviation requires completion of the appropriate attachment, "Industry Guideline Deviation Approval Sheet", located in NMM EN-DC-317.

6.15 If continuous monitoring is lost, place high priority on correcting problem and collect grab samples every 6 hours if analyzers on both trains are inoperable.

6.16 The replacement steam generators have additional sample requirements imposed by the replacement vendor. Per the Technical Operation and Maintenance Manual (01-5070437-00) approved by AREVA and Entergy, EPRI secondary water chemistry control parameter requirements present and future must be adhered to in order to maintain warranty. Additionally, lead and copper are secondary diagnostic parameters with warranty implications. AREVA has provided additional parameters, frequencies, and suggested actions as recommendations. However, AREVA has requested notification of exceeded limits, deviated frequencies, and failures to monitor for all warranted and recommended items. Notification is to be performed within ninety days of each failure.

7.0 ATTACHMENTS AND FORMS

7.1 ATTACHMENTS

7.1.1 Attachment 1, Modes 5 and 6 Cold Shutdown/Wet Layup (RCS ≤200°F)

7.1.2 Attachment 2, Mode 4 Hot Shutdown (RCS >200°F and <280°F)

7.1.3 Attachment 3, Mode 3 Hot Standby (RCS ≥280°F, Reactor not Critical)

7.1.4 Attachment 4, Mode 2 Startup (Reactor Critical at ≤5% Reactor Power)

7.1.5 Attachment 5, Mode 1 Power Operation (Reactor Power >5% and <15%)

7.1.6 Attachment 6, Mode 1 Power Operation (Reactor Power ≥15%)

7.1.7 Attachment 7, Cold Shutdown/Wet Layup Corrective Actions

7.1.8 Attachment 8, Hot Shutdown, Hot Standby, Startup, and Reactor Critical at <15% Reactor Power Corrective Actions

7.1.9 Attachment 9, Mode 1 Power Operation (≥15% Reactor Power) Corrective Actions

7.2 FORMS

7.2.1 Form 1000.042A, Unit 1 Steam Generator Monitoring Report (electronic form)

ATTACHMENT 1

MODES 5 AND 6
COLD SHUTDOWN/WET LAYUP
(RCS ≤200°F)

Control Parameters

NOTE

During outages, when the time period between cold shutdown and draining the steam generators for maintenance or startup is expected to be less than seven days or the time period after completion of maintenance and startup is expected to be less than seven days, it is not necessary to place the steam generators in full wet layup (in accordance with the pH and hydrazine values below). Unless the steam generators are being drained for maintenance or personnel safety or environmental issues/concerns exist, the steam generators should be filled with feedwater and a nitrogen overpressure established. The feedwater should contain >5 ppm hydrazine and <100 ppb dissolved oxygen. If condenser vacuum is broken, steps should be taken to ensure oxygenated feedwater is not introduced into the steam generators. When the steam generators cannot be placed in wet layup, a nitrogen blanket or other protective measures should be instituted to limit corrosion. Coordinated efforts should be employed to minimize steam generator dry layup.

Parameter	Frequency (A)	Normal Value	Initiate Action	Value Prior to Heatup (B)
Steam Generator Sample				
pH at 25°C	(C)	>9.5	≤9.5	---
Hydrazine, ppm	(C)	≥75, ≤500	<75, >500	---
Sodium, ppb	(C)	≤1000	>1000	≤100
Chloride, ppb	(C)	≤1000	>1000	≤100
Sulfate, ppb	(C)	≤1000	>1000	≤100
Oxygen, ppb (H)	(C)	≤100		≤100
Steam Generator Fill Source				
Dissolved O2, ppb	Daily (D) (E)	≤100	>100	

Diagnostic Parameters

Parameter	
Steam Generator Nitrogen Overpressure, PSIG (F)	- minimize oxygen ingress to the steam generators during wet lay-up
Steam Generator Hideout Return (G)	- Typical samples collected are Na, Cl, SO4, K, Mg, Ca, Al and SiO2

Steam Generator Fill Source		
Conductivity, µmho/cm	Daily	Monitor for ionic impurity ingress to the steam generators

MODES 5 AND 6
COLD SHUTDOWN/WET LAYUP
(RCS $\leq$200°F)

(A) When the secondary system is in feedwater cleanup, it may not be possible to obtain a steam generator sample. The amount of time for feedwater recirculation prior to heatup should be minimized as much as possible.

(B) The "Value Prior to Heatup" shall be verified by the Chemistry department. The completion of Plant Preheatup and Precritical Checklist, Appendix E, in OP-1102.001 performed by the Chemistry Superintendent documents this performance. This may be based on the most recent chemistry values being in spec for value prior to heatup and at least one drain and fill being performed to remove wet lay-up chemicals prior to heatup or by sampling the OTSGs.

(C) Sampling should be initiated within 24 hours after initial fill or after significant water additions and then sample every other day until stable, then weekly. Wet layup chemistry should be established within 48 hours of filling. If outage maintenance results in the inability to obtain a scheduled sample, then the Chemistry Superintendent or designee should review the analysis data and determine whether the change in frequency is acceptable. Document the change on Form 1052.002A or in the Chemistry database.

(D) Deoxygenated water is preferred for the initial fill of the steam generators subsequent to a shutdown, during feed and bleed operations, and during any fills subsequent to a draindown. When oxygenated water must be used as a fill source, appropriate compensatory actions shall be taken to minimize steam generator exposure to oxygen, e.g., nitrogen sparging or addition of a reducing agent to the fill source or directly to the steam generators. It is recognized that testing of the Emergency Feedwater system may result in limited ingress of oxygenated water to the steam generators during brief periods of time since EFW source water may be high in oxygen. However, such transients should be minimized to the extent possible.

(E) Conformance to oxygen limits should be verified prior to any fill operation, except for Emergency Feedwater testing.

(F) A nitrogen overpressure should be maintained on the steam generators when personnel safety will not be compromised.

(G) Hideout return assessments generally should be based on data collected during fill/drain operations immediately subsequent to shutdown.

(H) Routine monitoring not required prior to initial heatup if hydrazine concentration is within normal range.

ATTACHMENT 2

MODES 4
HOT SHUTDOWN
(RCS >200°F AND <280°F)

Feedwater
Control Parameters

Parameter	Frequency	Initiate Action
pH at 25°C	3/Day	(A)
Dissolved Oxygen, ppb	Continuous	>100 (B)
Hydrazine, ppb	3/Day	<8 x CPD [O_2] (B) (C) <50 ppb (B) (E)
Suspended Solids, ppb	3/Day	>100 (B)

Feedwater
Diagnostic Parameters (D)

Parameter	Frequency	Normal Value	Initiate Action
Silica, ppb	Daily	≤10 (G)	>10 (H) (G) (I)
Sodium, ppb	Daily	≤5 (G)	>5 (G) (J)
Sulfate, ppb	Daily	≤50 (G)	>50 (G) (J)
Chloride, ppb	Daily	≤5 (G)	>5 (G) (J)
Cation (F) Conductivity, umhos/cm	3/Day	≤1 (G)	>1 (G) (M)
Lead, ppb (G) (K)	Daily	≤1 (G)	>1 (G)

ATTACHMENT 2

MODES 4
HOT SHUTDOWN
(RCS >200°F AND <280°F)

Steam Generator
Control Parameters (D)

Parameter	Frequency	Initiate Action
Sodium, ppb	Continuous (L)	>100 (B)
Chloride, ppb	3/Day	>100 (B)
Sulfate, ppb	3/Day	>100 (B)

Steam Generator
Diagnostic Parameters

Parameter	Frequency	Normal Value	Initiate Action
Lead, ppb(G)(K)	Weekly	≤1(G)	
Silica, ppb(G)	Daily	(H)	
Cation Conductivity umhos/cm (F)	3/day	≤2(G)	>2(G)
	Monitor organic acid concentrations and large increases in anionic contaminants		
pH at 25°C	Should be consistent with or higher than feedwater pH		
Hydrazine, ppb	For trending to assess oxidant control		

ATTACHMENT 2

MODES 4
HOT SHUTDOWN
(RCS >200°F AND <280°F

(A) Values for pH should be ≥8.8, but morpholine should not be greater than 75 ppm for an extended period of time.

(B) Return to normal value within 8 hours or consider a startup/power hold. An out of spec condition should be documented on Form 1000.042A and a condition report initiated for any out of spec condition.

(C) Oxygen concentration measured at condensate pump discharge.

(D) Since the OTSG is operating as a recirculating steam generator at power <15%, control and assessment of impurity ingress is based on OTSG blowdown impurity concentrations.

(E) A minimum concentration of 50 ppb hydrazine is maintained at all times to provide a reasonable residual in case of oxygen inleakage transients.

(F) Calculated value based on strong acid anion contributions.

(G) This parameter or limit is a steam generator replacement vendor (AREVA) recommendation and is not required by EPRI. If a limit is exceeded, a notification along with corrective actions taken should be forwarded to AREVA within ninety (90) days.

(H) A steam generator silica limit of ≤100 ppb may be substituted for the FW silica limit at <15% power.

(I) Return to normal value within twenty-four (24) hours.

(J) Identify source(s) and return to normal values within twenty-four (24) hours or prior to power escalation (>15% power).

(K) AREVA states sources of lead contamination must be managed to limit lead ingress. Lead levels must be below the limit of detectability of 1.0 ppb. The desired lead level is <0.05 ppb. For the steam generator lead sample, at least one sample shall be obtained when RCS temperature >250 degrees F and reactor power is <15%.

(L) Alternate monitoring of the steam generators is acceptable.

(M) Return to normal value within 24 hours or stop feeding SGs until within normal value.

ATTACHMENT 3

MODE 3
HOT STANDBY
(RCS ≥280°F, REACTOR NOT CRITICAL)

Feedwater
Control Parameters

Parameter	Frequency	Initiate Action
pH at 25° C	3/Day	(A)
Dissolved Oxygen, ppb	Continuous	>10 (B)
Hydrazine, ppb	3/Day	<8 x CPD [O_2] (B) (C) <50 ppb (B) (E)
Suspended Solids, ppb	Daily	>10 (B)

Feedwater
Diagnostic Parameters (D)

Parameter	Frequency	Normal Value	Initiate Action
Silica, ppb	Daily	≤10 (G)	>10 (G) (H) (I)
Sodium, ppb	Daily	≤5 (G)	>5 (G) (J)
Sulfate, ppb	Daily	≤50 (G)	>50 (G) (J)
Chloride, ppb	Daily	≤5 (G)	>5 (G) (J)
Cation Conductivity, umhos/cm (F)	3/Day	≤0.5 (G)	>0.5 (G) (M)
Lead, ppb (G) (K)	Daily	≤1 (G)	>1 (G)

ATTACHMENT 3

MODE 3
HOT STANDBY
(RCS ≥280°F, REACTOR NOT CRITICAL)

Steam Generator
Control Parameters (D)

Parameter	Frequency	Initiate Action
Sodium, ppb	Continuous (L)	>100 (B)
Chloride, ppb	3/Day	>100 (B)
Sulfate, ppb	3/Day	>100 (B)

Steam Generator
Diagnostic Parameters

Parameter	Frequency	Normal Value	Initiate Action
Lead, ppb(G)(K)	Weekly	≤1(G)	
Silica, ppb(G)	Daily	(H)	
Cation Conductivity umhos/cm (F)	3/day	≤2.0(G)	>2.0(G)
	Monitor organic acid concentrations and large increases in anionic contaminants		
pH at 25°C	Should be consistent with or higher than feedwater pH		
Hydrazine, ppb	For trending to assess oxidant control		

MODE 3
HOT STANDBY
(RCS ≥280°F, REACTOR NOT CRITICAL)

(A) Values for pH should be ≥8.8, but morpholine should not be greater than 75 ppm for an extended period of time.

(B) Return to normal value within 8 hours or consider a startup/power hold. An out of spec condition should be documented on Form 1000.042A and a condition report initiated for any out of spec condition.

(C) Oxygen concentration measured at condensate pump discharge.

(D) Since the OTSG is operating as a recirculating steam generator at power <15%, control and assessment of impurity ingress is based on OTSG blowdown impurity concentrations.

(E) A minimum concentration of 50 ppb hydrazine is maintained at all times to provide a reasonable residual in case of oxygen inleakage transients.

(F) Calculated value based on strong acid anion contributions.

(G) This parameter or limit is a steam generator replacement vendor (AREVA) recommendation and is not required by EPRI. If a limit is exceeded, a notification along with corrective actions taken should be forwarded to AREVA within ninety (90) days.

(H) A steam generator silica limit of ≤100 ppb may be substituted for the FW silica limit at <15% power.

(I) Return to normal value within twenty-four (24) hours.

(J) Identify source(s) and return to normal values within twenty-four (24) hours or prior to power escalation (>15% power).

(K) AREVA states sources of lead contamination must be managed to limit lead ingress. Lead levels must be below the limit of detectability of 1.0 ppb. The desired lead level is <0.05 ppb. For the steam generator lead sample, at least one sample shall be obtained when RCS temperature >250 degrees F and reactor power is <15%.

(L) Alternate monitoring of steam generators is acceptable.

(M) Return to normal value within 100 hours. Do not increase power above 15% until within normal value.

ATTACHMENT 4

MODE 2
STARTUP
(REACTOR CRITICAL AT ≤5% REACTOR POWER)

Feedwater
Control Parameters

Parameter	Frequency	Initiate Action
Feedwater sample		
pH at 25°C	3/Day	(A)
Dissolved Oxygen, ppb	Continuous	>5 (B)
Hydrazine, ppb	3/Day	<8xCPD [O2] (B) (C) <50 ppb (B) (F)
Suspended Solids, ppb	Daily	>10 (B)

Feedwater
Diagnostic Parameters (D)

Parameter	Frequency	Normal Value	Initiate Action
Silica, ppb	Daily	≤10 (H)	>10 (H) (I) (L)
Sodium, ppb	Daily	≤5 (H)	>5 (H) (J)
Sulfate, ppb	Daily	≤50 (H)	>50 (H) (J)
Chloride, ppb	Daily	≤5 (H)	>5 (H) (J)
Cation Conductivity, umhos/cm (G)	3/day	≤0.2 (H)	>0.2, >1.0, >2.0 (H) (N)
Lead ppb (H) (K)	Daily	≤1 (H)	>1 (H)

ATTACHMENT 4

MODE 2
STARTUP
(REACTOR CRITICAL AT ≤5% REACTOR POWER)

Steam Generator
Control Parameters (D)

Parameter	Frequency	Initiate Action	Value prior to >5% power
Sodium, ppb	Continuous (M)	>100 (B) (E)	≤100 (E) (O)
Chloride, ppb	3/Day	>100 (B) (E)	≤100 (E) (O)
Sulfate, ppb	3/Day	>100 (B) (E)	≤100 (E) (O)

Steam Generator
Diagnostic Parameters

Parameter	Frequency	Normal Value	Initiate Action
Lead, ppb(H)(K)	Weekly	≤1(H)	
Silica, ppb(H)	Daily	(H)(L)	
Cation Conductivity umhos/cm(G)	3/day	≤2.0(H)	>2.0(H)
	Monitor organic acid concentrations and large increases in anionic contaminants		
pH at 25°C	Should be consistent with or higher than feedwater pH		
Hydrazine, ppb	For trending to assess oxidant control		

MODE 2
STARTUP
(REACTOR CRITICAL AT ≤5% REACTOR POWER)

(A) Values for pH should be ≥8.8, but morpholine should not be greater than 75 ppm for an extended period of time.

(B) Return to normal value within 8 hours or consider a startup/power hold. An out of spec condition should be documented on Form 1000.042A and a condition report initiated for any out of spec condition. For degrading conditions for sodium, chloride, or sulfate it should be noted that Note E of this attachment will become applicable at >250 ppb for either contaminant.

(C) Oxygen concentration measured at condensate pump discharge.

(D) Since the OTSG is operating as a recirculating steam generator at power <15%, control and assessment of impurity ingress is based on OTSG blowdown impurity concentrations.

(E) During power escalation (reactor critical to 15% power), if either sodium, chloride, or sulfate concentration is >250 ppb be in hot shutdown within 4 hours and clean up by feed and bleed or drain and refill as appropriate. To reach hot shutdown conditions within 4 hours from power operations is difficult but permissible by Unit 1 Tech Specs. Contingencies should be established prior to exceeding the 250 ppb limit.

(F) A minimum concentration of 50 ppb hydrazine is maintained at all times to provide a reasonable residual in case of oxygen inleakage transients.

(G) Calculated value based on strong acid anions contributions.

(H) This parameter or limit is a steam generator replacement vendor (AREVA) recommendation and is not required by EPRI. If a limit is exceeded a notification along with corrective actions taken should be forwarded to AREVA within ninety (90) days.

(I) Return to normal value within twenty-four (24) hours.

(J) Identify source(s) and return to normal values within twenty-four (24) hours or prior to power escalation (>15% power).

(K) AREVA states sources of lead contamination must be managed to limit lead ingress. Lead levels must be below the limit of detectability of 1.0 ppb. The desired lead level is <0.05 ppb. For the steam generator lead sample, at least one sample shall be obtained when RCS temperature >250 degrees F and reactor power is <15%.

(L) A steam generator silica limit of ≤100 ppb may be substituted for the FW silica limit at <15% power. If limit is exceeded, then return to normal value within twenty-four (24) hours.

(M) Alternate monitoring of steam generators is acceptable.

(N) See Attachment 8 for cation conductivity corrective actions.

(O) This value shall be met prior to exceeding >5% power. Note (B) does not apply for exceeding 5% power.

ATTACHMENT 5

MODE 1
POWER OPERATION
(REACTOR POWER >5% AND <15%)

Feedwater
Control Parameters

Parameter	Frequency	Initiate Action
pH at 25°C	3/Day	(A)
Dissolved Oxygen, ppb	Continuous	>5 (B)
Hydrazine, ppb	3/Day	<8 x CPD[O2](B)(C) <50 ppb (B)(F)
Suspended Solids, ppb	Daily	>10 (B)

Feedwater
Diagnostic Parameters (D)

Parameter	Frequency	Normal Value	Initiate Action
Feedwater Sample			
Silica, ppb	Daily	≤10(H)	>10(H)(I)(L)
Sodium, ppb	Daily	≤5(H)	>5(H)(J)
Sulfate, ppb	Daily	≤50(H)	>50(H)(J)
Chloride, ppb	Daily	≤5(H)	>5(H)(J)
Cation Conductivity, umhos/cm (G)	3/Day	≤0.2(H)	>0.2, >1.0, >2.0(H)(N)
Lead, ppb(H)(K)	Daily	≤1.0(H)	>1.0(H)

MODE 1
POWER OPERATION
(REACTOR POWER >5% AND <15%)

Steam Generator
Control Parameters (D)

Parameter	Frequency	Initiate Action
Sodium, ppb	Continuous (M)	>250 (E)
Chloride, ppb	3/Day	>250 (E)
Sulfate, ppb	3/Day	>250 (E)

Steam Generator
Diagnostic Parameters

Parameter	Frequency	Normal Value	Initiate Action	Value prior to >15% power
Lead, ppb(H)(K)	Weekly	≤1(H)		
Silica, ppb(H)	Daily	(L)		
Cation Conductivity umhos/cm(G)	3/day	≤2.0(H)	>2.0(H)	≤2.0(H)
	(Monitor organic acid concentrations and large increases in anionic contaminants)			
pH at 25°C	Should be consistent with or higher than feedwater pH			
Hydrazine, ppb	For trending to assess oxidant control			

ATTACHMENT 5

MODE 1
POWER OPERATION
(REACTOR POWER >5% AND <15%)

(A) Values for pH should be ≥8.8, but morpholine should not be greater than 75 ppm for an extended period of time.

(B) Return to normal value within 8 hours or consider a startup/power hold. An out of spec condition should be documented on Form 1000.042A and a condition report initiated for any out of spec condition.

(C) Oxygen concentration measured at condensate pump discharge.

(D) Since the OTSG is operating as a recirculating steam generator at power <15%, control and assessment of impurity ingress is based on OTSG blowdown impurity concentrations.

(E) During power escalation (reactor critical to 15% power), if either sodium, chloride, or sulfate concentration is >250 ppb be in hot shutdown within 4 hours and clean up by feed and bleed or drain and refill as appropriate. To reach hot shutdown conditions within 4 hours from power operations is difficult but permissible by Unit 1 Tech Specs. Contingencies should be established prior to exceeding the 250 ppb limit.

(F) A minimum concentration of 50 ppb hydrazine is maintained at all times to provide a reasonable residual in case of oxygen inleakage transients.

(G) Calculated value based on strong acid anion contributions.

(H) This parameter or limit is a steam generator replacement vendor (AREVA) recommendation and is not required by EPRI. If a limit is exceeded a notification along with corrective actions taken should be forwarded to AREVA within ninety (90) days.

(I) Return to normal value within twenty-four (24) hours.

(J) Identify source(s) and return to normal values within twenty-four (24) hours or prior to power escalation (>15% power).

(K) AREVA states sources of lead contamination must be managed to limit lead ingress. Lead levels must be below the limit of detectability of 1.0 ppb. The desired lead level is <0.05 ppb. For the steam generator lead sample, at least one sample shall be obtained when RCS temperature >250 degrees F and reactor power is <15%.

(L) A steam generator silica limit of ≤100 ppb may be substituted for the FW silica limit at <15% power. If limit is exceeded, then return to normal value within twenty-four (24) hours.

(M) Alternate monitoring of steam generators is acceptable.

(N) See Attachment 8 for cation conductivity corrective actions.

ATTACHMENT 6

MODE 1
POWER OPERATION
(REACTOR POWER ≥15%)

Feedwater
Control Parameters

Parameter	Frequency(A)	Action Levels 1	2	3
Morpholine, ppm	Daily	(B)		
Hydrazine, ppb	Daily	≤8 x CPD[O2] or <20 ppb minimum (I)	(I)	(I)
Sodium, ppb	Continuous(C)	1	3	5 (L)
Chlorides, ppb	Daily(C)	3	5	10 (L)
Sulfates, ppb	Daily	1	3	5 (L)
Silica, ppb (M)	Weekly	10	20	
Total Iron, ppb	Weekly (D)	5		
Oxygen, ppb	Continuous (E)	5	10	

Feedwater
Diagnostic Parameters (D)

	Frequency	Normal Value	Initiate Action
pH (B)			
Cation Conductivity, umhos/cm (N)	Daily	≤0.2(J)	(K)
Fluoride	Fluoride transport assessment, resolution of cat. cond. observations		
Copper, ppb (F)	Weekly	≤1.0 (J)	>1.0 (J)
Lead*, ppb	Weekly	≤0.05(J)	>0.05(J)
Magnetite Fraction			

Integrated Corrosion Product Transport - Assessment of corrosion product mass transport to steam generators using integrated samples. 1/refueling cycle

*Lead transport assessment per EPRI

ATTACHMENT 6

MODE 1
POWER OPERATION
(REACTOR POWER ≥15%)

Parameter	Frequency	Initiate Action
Condensate Pump Discharge Sample (G)		
Diagnostic Parameter		
Dissolved Oxygen, ppb	Continuous	>25

		Action Levels		
		1	2	3
Control Parameter				
Dissolved Oxygen, ppb	Continuous	>10	>30 (H)	

Moisture Separator Drain Samples

Diagnostic Parameters

Sodium, ppb

Chloride, ppb

Sulfate, ppb

Organic acids, ppb — Demonstrate consistency with cation conductivity.

Cation Conductivity, µmho/cm

ATTACHMENT 6
MODE 1
POWER OPERATION
(REACTOR POWER ≥15%)

(A) No planned maintenance should be allowed that will result in a loss of sample (which would prevent meeting sample frequencies) for more than twenty-four (24) hours. During the maintenance period, grab samples (if sampling capability exists) should be collected every six (6) hours for the applicable samples. Grab samples may be taken from the corrosion product samplers or other final feedwater location if cooling is available, to satisfy the sampling requirements. Maintenance requiring the system to be down for more than twenty-four (24) hours should be scheduled to be performed during outages. If unexpected conditions require sample cooling to be unavailable for more than twenty-four (24) hours, alternate sample cooling capability should be obtained (temporary modification or procedurally allowed jumper) or alternate sampling should be evaluated by Chemistry management.

(B) pH should be ≥8.8, but not more than 75 ppm morpholine for extended periods of time.

(C) Final feedwater concentrations may be calculated from moisture separator drain concentrations using a mass balance approach. Divide MSR values for sodium and chloride by 16. This approach cannot be used for sulfate since sulfate has a high portion of hideout in the steam generator.

(D) This limit applies to steady state operation after a stabilization period, usually 1 week. Integrated sampling should be initiated at approximately 30% power after startup or as directed by Chemistry management.

(E) Feedwater oxygen values are normally taken from the inline analyzers. If the inline analyzer is out of service, grab samples must be taken. Do not sample for feedwater oxygen at the sample room. If feedwater cannot be sampled on either feedwater train locally either by analyzer or grab sample, then condensate oxygen becomes a control parameter.

(F) Copper analysis is used to trend and establish a baseline value per EPRI guidelines. Steam generator replacement vendor (AREVA) recommends limit and the associated action to identify and eliminate source if limit is exceeded.

(G) Condensate pump oxygen is considered a diagnostic parameter when using localized feedwater oxygen sampling. Plant power reduction is not required based on condensate pump oxygen if localized feedwater oxygen sampling is utilized. Normally, the local feedwater oxygen analyzer is used or if analyzer is out of service, use grab samples locally. If condensate oxygen as a diagnostic parameter is greater than 25 ppb, steps should be taken to reduce condensate oxygen to avoid excessive amounts of hydrazine in feedwater.

(H) If condensate oxygen is used as a control parameter, reduce power to 50-60% and determine source of inleakage.

(I) In the event of loss of hydrazine feed that is not restored within 8 hours, commence plant shutdown as quickly as safe plant operation permits. If hydrazine feed is restored, the plant may return to full power. The 8 hour time clock starts when action level 1 for hydrazine is entered.

ATTACHMENT 6

MODE 1
POWER OPERATION
(REACTOR POWER ≥15%)

(J) This parameter or limit is a steam generator replacement vendor (AREVA) recommendation and is not required by EPRI. If a limit is exceeded, a notification along with corrective actions taken should be forwarded to AREVA within ninety (90) days.

(K) The steam generator replacement vendor (AREVA) recommends the following corrective actions in the event the following calculated cation conductivity (based on strong acid anion contributions) limits are exceeded.

1. IF value exceeds 0.2 umhos/cm,
   THEN return to normal value within twenty-four (24) hours
   AND immediately check chloride and sulfate.

2. IF value exceeds 1.0 umhos/cm,
   THEN return to normal value within eight (8) hours
   AND immediately check chloride and sulfate.

3. IF value exceeds 2.0 umhos/cm,
   THEN return to normal value within two (2) hours
   AND immediately check chloride and sulfate.

(L) Plant shutdown required only if Action Level 3 value is exceeded for >2 hours, or if at any time for any duration the parameter exceeds 20 ppb.

(M) Parameter included for turbine performance. Silica is not considered to impact steam generator integrity and is therefore a recommended parameter outside of NEI 97-06 requirements.

(N) Calculated value based on strong anion contributions.

ATTACHMENT 7

COLD SHUTDOWN/WET LAYUP CORRECTIVE ACTIONS

Steam Generator Sample

Parameter Out of Range	Corrective Action
pH	1. IF low, THEN add ammonia to correct and mix contents of steam generator. 2. Crosscheck with ammonia/hydrazine/specific conductivity values for consistency.
Sodium/Chloride/Sulfate	1. Feed and bleed until within range or drain and refill with deoxygenated makeup water of proper purity. 2. Check makeup water purity.
Hydrazine	1. IF low, THEN add hydrazine until within range.

ATTACHMENT 8

HOT SHUTDOWN, HOT STANDBY, STARTUP, AND REACTOR CRITICAL AT <15% REACTOR POWER CORRECTIVE ACTIONS

Feedwater Sample

Parameter Out of Range	Corrective Action
pH	1. IF too low, THEN increase morpholine or hydrazine feed. 2. IF pH is high, THEN perform one or more of the following: a. Blowdown and add deionized, deoxygenated makeup water. b. Evaluate appropriate polisher change-out. c. Decrease morpholine or hydrazine feed.
Dissolved Oxygen	1. Check for decreasing vacuum. 2. Check hydrazine residual and add if required. 3. Check dissolved oxygen in makeup water.
Morpholine/Hydrazine	1. Adjust chemical addition.
Suspended Solids	1. Verify pH and amine concentrations are within site specific ranges. 2. Check condensate polisher performance/alignment.
Cation Conductivity	1. The steam generator replacement vendor (AREVA) recommends the following corrective actions for reactor power >5% and <15%. a. IF value exceeds 0.2 umhos/cm, THEN return to normal value within twenty-four (24) hours after feed to SGs is initiated. b. IF value exceeds 1.0 umhos/cm, THEN return to normal value within twenty-four (24) hours AND do not exceed 15% reactor power until within normal value. c. IF value exceeds 2.0 umhos/cm, THEN return to normal value within eight (8) hours OR initiate cooldown with normal procedures.

ATTACHMENT 8

HOT SHUTDOWN, HOT STANDBY, STARTUP, AND REACTOR CRITICAL AT <15% REACTOR POWER CORRECTIVE ACTIONS

Steam Generator Sample

Parameter Out of Range	Corrective Action
Sodium/Chloride/ Sulfate/Cation Conductivity	1. Drain and fill; add demineralized, deoxygenated makeup water. 2. Check effluent of condensate polishers and make appropriate changes. 3. Verify absence of condenser inleakage. 4. Check makeup water/feedwater purity. 5. IF corrective actions do not alleviate the condition, THEN consider cooldown, drain, and refill.

ATTACHMENT 9

POWER OPERATION (≥15% REACTOR POWER) CORRECTIVE ACTIONS

Final Feedwater Sample

Parameter Out of Range	Corrective Action
pH	1. Verify correct hydrazine feed. 2. Verify correct morpholine feed. 3. Verify absence of regenerant chemical inleakage.
Morpholine/Hydrazine	1. Adjust chemical addition.
Dissolved Oxygen	1. Check hydrazine residual; adjust to ≥8 x CPD[O_2]. 2. Identify and reduce sources of air inleakage. 3. Check for decreasing condenser vacuum.
Chloride/Silica/ Sodium/Sulfate	1. Request routing of MSR drains to condenser. 2. Regenerate resins as required. 3. Identify and eliminate source using other sample points as necessary. 4. Investigate for possible internal source of contamination. 5. Consider hot soaks following shutdown due to chemistry excursion.
Iron	1. Assure morpholine, pH and oxygen are in specification. 2. Increase pH/morpholine to maximum value allowed within control range.

ATTACHMENT 9

POWER OPERATION (≥15% REACTOR POWER) CORRECTIVE ACTIONS

Condensate Pump Discharge Sample

Parameter Out of Range	Corrective Action
Dissolved Oxygen	1. Identify and reduce air inleakage sources. 2. IF available, THEN test other available locations in feedwater train for dissolved oxygen. 3. Check for decreasing condenser vacuum. 4. Evaluate condenser oxygen removal efficiency.

A3. Equipment Control

D/R

K/A 2.2.12

Knowledge of surveillance procedures

A1JPM-SRO-SURV4

ADMINISTRATIVE JOB PERFORMANCE MEASURE

TUOI: A1JPM-SRO-SURV4

UNIT: 1 REV # 0 DATE: _____

TUOI NUMBER: A1JPM-SRO-SURV4

SYSTEM/DUTY AREA: ADMINISTRATIVE TOPIC – CONDUCT OF OPERATIONS

TASK: MONITOR CONDUCT OF SHIFT SURVEILLANCE TESTS

JTA#: ANO-SRO-ADMIN-NORM-200

KA VALUE RO: 3.7 SRO: 4.1 KA REFERENCE: 2.2.12

APPROVED FOR ADMINISTRATION TO: RO: _____ SRO: X

TASK LOCATION: INSIDE CR: _____ OUTSIDE CR: _____ BOTH: X

SUGGESTED TESTING ENVIRONMENT AND METHOD (PERFORM OR SIMULATE):

PLANT SITE: _____ SIMULATOR: _____ Classroom: PERFORM

POSITION EVALUATED: RO: _____ SRO: X

ACTUAL TESTING ENVIRONMENT: SIMULATOR: _____ PLANT SITE: _____ Classroom: X

TESTING METHOD: SIMULATE: _____ PERFORM: X

APPROXIMATE COMPLETION TIME IN MINUTES: 20 MINUTES

REFERENCE(S): 1106.006, Emergency Feedwater Pump Operation

EXAMINEE'S NAME: _____ SSN _____-_____-_____

EVALUATOR'S NAME: _____

THE EXAMINEE'S PERFORMANCE WAS EVALUATED AGAINST THE STANDARDS CONTAINED IN THIS JPM AND IS DETERMINED TO BE:

SATISFACTORY: _____ UNSATISFACTORY: _____

PERFORMANCE CHECKLIST COMMENTS:

_____

_____

_____

_____ Start Time _____ Stop Time _____ Total Time

SIGNED _____ DATE: _____

SIGNATURE INDICATES THIS JPM HAS BEEN COMPARED TO ITS APPLICABLE PROCEDURE BY A QUALIFIED INDIVIDUAL (NOT THE EXAMINEE) AND IS CURRENT WITH THAT REVISION.

THE EXAMINER SHALL REVIEW THE FOLLOWING WITH THE EXAMINEE:

The examiner shall review the "Briefing Checklist - System Walkthrough" portion of OP 1064.023 Attachment 6 with the examinee.

JPM INITIAL TASK CONDITIONS: The quarterly test of Emergency Feedwater Pump (P-7B) per 1106.006, Supplement 11, was performed on the previous shift. The SM is performing Section 4, Shift Manager Review and Analysis.

TASK STANDARD: The examinee has reviewed 1106.0006, Supplement 11 and identified at least 3 administrative errors in the test and must include the TS time clock entry issue and the Acceptance Criteria Table 4 issue

TASK PERFORMANCE AIDS: Completed 1106.0006, Supplement 11.

INITIATING CUE:

- The SM requests that you conduct a peer review of the test since he has found some errors.
- Identify at least 3 errors in the test and must include the TS entry time clock issue AND the Acceptance Criteria Table 4 issue.

CRITICAL ELEMENTS (C)_____2_____

(C)	PERFORMANCE CHECKLIST	STANDARD	N/A	SAT	UNSAT
	1. Review 1106.006, Supplement 11.	Examinee reviewed 1106.006, Supplement 11.			
(C)	2. Identify at least 3 administrative errors.	Examinee identified at least 3 of the following administrative errors, two of which must include the TS entry time clock issue and the Acceptance Criteria Table 4 issue: • **Entry into T.S. time clock step was N/A'd at step 2.1.4 (required)** • **Acceptance Criteria Table 4, EFW Test Recirc Flow FI-2888 recorded as 532 gpm and "YES" circled when this value is greater than Limiting Range for Operability (required)** • Stopwatch cal due date has expired in step 3.2.1. • Independent verification initials missing in step 1.2.1.			

END

ENTERGY OPERATIONS INCORPORATED
ARKANSAS NUCLEAR ONE

TITLE: **EMERGENCY FEEDWATER PUMP OPERATION**	DOCUMENT NO. **1106.006**	CHANGE NO. **073**
	WORK PLAN EXP. DATE **N/A**	
SET #	SAFETY-RELATED ☒YES ☐NO	IPTE ☒YES ☐NO
	TEMP MOD ☒YES ☐NO	LEVEL OF USE ☒ CONTINUOUS ☐ REFERENCE ☐ INFORMATIONAL
	PROGRAMMATIC EXCLUSION PER EN-LI-100 ☐YES ☒NO	

When you see these ***TRAPS***	Get these ***TOOLS***
Time Pressure	**Effective Communication**
Distraction/Interruption	**Questioning Attitude**
Multiple Tasks	**Placekeeping**
Over Confidence	**Self Check**
Vague or Interpretive Guidance	**Peer Check**
First Shift/Last Shift	**Knowledge**
Peer Pressure	**Procedures**
Change/Off Normal	**Job Briefing**
Physical Environment	**Coaching**
Mental Stress (Home or Work)	**Turnover**

VERIFIED BY	DATE	TIME

FORM TITLE:	FORM NO.	CHANGE NO.
VERIFICATION COVER SHEET	**1000.006A**	**054**

— KEY —

SUPPLEMENT 11

ELECTRIC EMERGENCY FEEDWATER PUMP (P-7B) TEST
(QUARTERLY)

This test demonstrates the operability of P-7B and selected check valves by running the pump at rated flow through the recirc test header. This test satisfies SR 3.7.5.2, the required quarterly test of P-7B, by verifying it starts, and develops a discharge head at the test point that is greater than or equal to the required developed head in accordance with the Inservice Testing program (TS 5.5.8). Every 18 months, prior to refueling, a full open stroke verification of EFW Suction Line Check Valves (CS-293 and CS-294) is performed using non-intrusive test equipment.

1.0 INITIAL CONDITIONS

INITIALS

1.1 Check the purpose of this test.

✓ A) Regularly scheduled quarterly test

__ B) Regularly scheduled 18-month test prior to refueling

__ C) Operability test following significant maintenance (describe maintenance performed in section 4.0)

__ D) Other (describe in section 4.0)

NOTE

- If test data taken under proper test conditions falls outside the Limiting Range for Operability, the component being tested is declared inoperable, even if instrument mis-calibration is suspected.
- If SPDS is specified in instrument column for recording test data and SPDS instrumentation is unavailable, the surveillance is either postponed or alternate instruments are used per the following conditions:
  - Acceptance criteria instrument column is annotated to show the instrument number used and the cal due date.
  - Test instrument accuracy is ±2% of full scale or better.
  - Range of test instrument is <3 times normal process value.
  - Test instrument installed at SPDS transmitter local test connection.
  - "Shift Manager Review and Analysis" section states the alternate instruments used and the reason for their use.

1.2 IF alternate test instruments are used, THEN verify instruments meet requirements for alternate test instruments, verify instrument column is annotated and explain in section 4.0. BB

1.2.1 Alternate test instrument(s) installed. AC

Independent Verification _____

1.2.2 Alternate test instrument(s) shall be attended unless isolated.

Signature JAW 7-3-08

Initials

-KEY-

2.0 TEST METHOD

NOTE

The EFIC system is designed to allow full flow recirc testing while at power. If the need arises for EFW during the test, the system will automatically leave the test mode and feed the steam generators as required.

2.1 Prepare system for testing and check for backleakage of SG-A EFW Supply Line Check Valve (FW-13A) and SG-B EFW Supply Line Check Valve (FW-13B) as follows:

2.1.1 Verify test recirc header depressurized AND if necessary, momentarily open EFW Test Recirc Pressure Control (CV-2888). BB

2.1.2 Record the following data in Table 1:

A. Initial EFW Test Recirc PRESS (C09) BB

B. Idle P-7B suction pressure BB

2.1.3 Verify the following valves open:

- EFW P-7B to SG-A Isol (CV-2670) BB
- EFW P-7B to SG-B Isol (CV-2626) BB

2.1.4 IF in Mode 1—4, AND OTSGs are being relied upon for heat removal, THEN enter 72-hour time clock per TS 3.7.5 Condition B. N/A

Time N/A Date N/A

2.1.5 Open EFW Test Recirc P-7B Isolation (CV-2869). BB

NOTE

- Check valve leakage is indicated by rising test header pressure and rising pump discharge piping temperature.
- A pressure spike may be indicated on PI-2888 when CV-2869 is opened. It may take 5-10 minutes for pressure to stabilize.

2.1.6 Monitor EFW Test Recirc PRESS for rising pressure. BB

Should not BE N/A'd

-KEY-

SUPPLEMENT 11

3.1 (continued)

Table 4

TEST QUANTITY	INSTRUMENT	MEASURED VALUES	ACCEPTABLE NORMAL RANGE	LIMITING RANGE FOR OPERABILITY	IS DATA WITHIN LIMITING RANGE? Circle YES or NO
Running Suction Pressure	TG 1002 12/25/03 SPDS	19 psig	N/A	>7 psig	YES NO
Discharge Pressure	SPDS	1423 psig	N/A	≥1220 psig	YES NO
Discharge Pressure	PIS-2812	1428 psig	N/A	N/A	N/A
EFW Test Recirc Flow	FI-2888	532 GPM	N/A	520 to 530 gpm	YES NO
Pump ΔP	Discharge press minus suct press (SPDS)	1404 psid	N/A	(1) 1209 to 1460.9 psid	YES NO
P-7B Minimum Recirc Flow	FI-2801	105 GPM	N/A	N/A	N/A
Motor Running Current	A-311 Ammeter	(1) C Ø 71.5 amp (2) A Ø 71.5 amp (3) B Ø 71.5 amp	N/A	N/A	N/A

Note 1 Design Basis Value for Pump ΔP is 1209 psid at 520 to 530 gpm.

Exceeds Limit

KEY

3.1.2 IF any measured value does not fall within the "Acceptable Normal Range", THEN initiate corrective action. N/A

3.2 Stroke Criteria

3.2.1 Compare measured values/stroke times with "Acceptable Normal Range" and "Limiting Range for Operability". BB

Stopwatch M&TE No. DES-103 Cal Due Date 8-10-08

Stopwatch M&TE No. _____ Cal Due Date _____ CAL D. Expired

Table 7

Valve	CNTRL Panel	Test Direct	Alternate Position Verif (using flow)	Measured Value-Stroke Time (Nearest 1/10 Sec)	Accept Normal Range Time (Sec)	Limiting Range For Operability Time (Sec)	Is Data Within Limiting Range For Operability?	Design Bases Value
CV-2648	C09	Close	(✓) if flow ~0 gpm (✓)	10.7	8.9 - 14.7	17.7	YES NO	57.4
CV-2646	C09	Open	(✓) if flow ≥520 gpm (✓)	10.4	8.1 - 13.3	16.0 (1)	YES NO	N/A
CV-2646	C09	Close	(✓) if flow ~0 gpm (✓)	10.0	7.5 - 12.5	15.0	YES NO	57.4
CV-2648	C09	Open	(✓) if flow ≥520 gpm (✓)	10.3	8.7 - 14.5	17.4 (1)	YES NO	N/A

Note 1 Valve stroke time ≤ limiting value verifies proper fail safe operation.

3.2.2 IF "No" is circled in any space in the table above, THEN perform the following: N/A

- Declare that valve inoperable
- Initiate a Condition Report
- Immediately notify the Shift Manager
- Initiate corrective action
- Reference applicable Tech Spec LCO for required actions

3.2.3 IF any measured stroke time does not fall within the "Acceptable Normal Range", THEN immediately retest valve or declare that valve inoperable. Refer to "Operability" section of this procedure for additional guidance. N/A

Performed by Bob Bankiner Operator Date/Time 9/10/08 0230

Al Cogs 9/10/08 0230

KEY

EXAMINEE'S COPY

JPM INITIAL TASK CONDITIONS:

- The quarterly test of Emergency Feedwater Pump (P-7B) per 1106.006, Supplement 11, was performed on the previous shift.
- The SM is performing Section 4, Shift Manager Review and Analysis.
- Plant 100% power

INITIATING CUE:

- The SM requests that you conduct a peer review of the test since he has found some errors.
- Identify at least 3 errors in the test.

ENTERGY OPERATIONS INCORPORATED
ARKANSAS NUCLEAR ONE

TITLE: **EMERGENCY FEEDWATER PUMP OPERATION**	DOCUMENT NO. **1106.006**	CHANGE NO. **073**
	WORK PLAN EXP. DATE **N/A**	
SET #	SAFETY-RELATED ☒YES ☐NO	IPTE ☒YES ☐NO
	TEMP MOD ☒YES ☐NO	LEVEL OF USE ☒ CONTINUOUS ☐ REFERENCE ☐ INFORMATIONAL
	PROGRAMMATIC EXCLUSION PER EN-LI-100 ☐YES ☒NO	

When you see these *TRAPS*

- **Time Pressure**
- **Distraction/Interruption**
- **Multiple Tasks**
- **Over Confidence**
- **Vague or Interpretive Guidance**
- **First Shift/Last Shift**
- **Peer Pressure**
- **Change/Off Normal**
- **Physical Environment**
- **Mental Stress (Home or Work)**

Get these *TOOLS*

- **Effective Communication**
- **Questioning Attitude**
- **Placekeeping**
- **Self Check**
- **Peer Check**
- **Knowledge**
- **Procedures**
- **Job Briefing**
- **Coaching**
- **Turnover**

VERIFIED BY	DATE	TIME

FORM TITLE:	FORM NO.	CHANGE NO.
VERIFICATION COVER SHEET	**1000.006A**	**054**

SRO STUDENT HANDOUT

SUPPLEMENT 11

ELECTRIC EMERGENCY FEEDWATER PUMP (P-7B) TEST
(QUARTERLY)

This test demonstrates the operability of P-7B and selected check valves by running the pump at rated flow through the recirc test header. This test satisfies SR 3.7.5.2, the required quarterly test of P-7B, by verifying it starts, and develops a discharge head at the test point that is greater than or equal to the required developed head in accordance with the Inservice Testing program (TS 5.5.8). Every 18 months, prior to refueling, a full open stroke verification of EFW Suction Line Check Valves (CS-293 and CS-294) is performed using non-intrusive test equipment.

1.0 INITIAL CONDITIONS

INITIALS

1.1 Check the purpose of this test.

✓ A) Regularly scheduled quarterly test

__ B) Regularly scheduled 18-month test prior to refueling

__ C) Operability test following significant maintenance (describe maintenance performed in section 4.0)

__ D) Other (describe in section 4.0)

NOTE

- If test data taken under proper test conditions falls outside the Limiting Range for Operability, the component being tested is declared inoperable, even if instrument mis-calibration is suspected.
- If SPDS is specified in instrument column for recording test data and SPDS instrumentation is unavailable, the surveillance is either postponed or alternate instruments are used per the following conditions:
  - Acceptance criteria instrument column is annotated to show the instrument number used and the cal due date.
  - Test instrument accuracy is ±2% of full scale or better.
  - Range of test instrument is <3 times normal process value.
  - Test instrument installed at SPDS transmitter local test connection.
  - "Shift Manager Review and Analysis" section states the alternate instruments used and the reason for their use.

1.2 IF alternate test instruments are used, THEN verify instruments meet requirements for alternate test instruments, verify instrument column is annotated and explain in section 4.0. BB

1.2.1 Alternate test instrument(s) installed. AC

Independent Verification _____

1.2.2 Alternate test instrument(s) shall be attended unless isolated. ←

SUPPLEMENT 11

1.3 Verify EFW Pumps (P-7A AND P-7B) off. BB

1.4 Verify system aligned per System Alignment Verification section of 1015.001, Conduct of Operations. BB

1.5 IF this is the regularly scheduled 18-month test, or a test to prove operability after significant maintenance, THEN verify digital pyrometer available. N/A

M&TE # N/A cal due date N/A.

1.6 IF this is the regularly scheduled 18-month test, THEN have Component Engineering Test Engineer set up their non-intrusive test equipment on EFW Suction Line Check Valves (CS-293 and CS-294), (both simultaneously) in preparation for obtaining full open stroke verification data. N/A

1.7 Portable vibrometer available to obtain vibration readings. BB

1.8 Stopwatch available for stroke time measurements. BB

1.8.1 Record stopwatch M&TE numbers and cal due date in section 3.0. BB

1.9 No EFIC system test being performed. BB

1.10 Verify the following EFW flow path valve positions with control power available to applicable control valves.

1.10.1 EFW P-7B Suction from CST (CV-2800) open. BB

1.10.2 EFW Serv Wtr Loop I Isolation (CV-3850) closed. BB

1.10.3 EFW P-7B Suction from SW (CV-2803) closed. BB

SUPPLEMENT 11

1.11 Verify normal standby parameters by performing the following.

1.11.1 Check pump oil level normal. I.B. AC

O.B. AC

1.11.2 Check motor oil level normal. I.B. AC

O.B. AC

1.11.3 Verify Pressure Control CV-2888 set at 1220 PSIG and valve demand indicating ~0%. BB

N/A 1.11.4 IF this test is being performed following significant maintenance on P-7B, THEN perform the following:

N/A A. Vent P-7B seals using:

- EFW Pmp P-7B Inbrd Mech Seal Vent (CS-1211) N/A
- EFW Pmp P-7B Outbrd Mech Seal Vent (CS-1212) N/A

B. Close the following valves:

- CS-1211 N/A
- CS-1212 N/A

1.12 Check (✓) applicable plant condition(s) and acknowledge prerequisites for pump test. BB

(✓) Unit in Mode 1—3

- P-7A Operable
- 72-hour time clock will be entered during this test per TS 3.7.5 Condition B.

( ) Unit in Mode 4

- Test can be performed provided neither steam generator is being credited for RCS heat removal (TS 3.7.5)

( ) Unit in Mode 5 or 6

- No restriction

1.13 IF in Mode 1—3, THEN verify no RPS, ESAS or DROPS test being performed. BB

1.14 Operator available to obtain P-7B running current readings at A-311. BB

2.0 TEST METHOD

NOTE

The EFIC system is designed to allow full flow recirc testing while at power. If the need arises for EFW during the test, the system will automatically leave the test mode and feed the steam generators as required.

2.1 Prepare system for testing and check for backleakage of SG-A EFW Supply Line Check Valve (FW-13A) and SG-B EFW Supply Line Check Valve (FW-13B) as follows:

2.1.1 Verify test recirc header depressurized AND if necessary, momentarily open EFW Test Recirc Pressure Control (CV-2888). BB

2.1.2 Record the following data in Table 1:

A. Initial EFW Test Recirc PRESS (C09) BB

B. Idle P-7B suction pressure BB

2.1.3 Verify the following valves open:

EFW P-7B to SG-A Isol (CV-2670) BB

EFW P-7B to SG-B Isol (CV-2626) BB

2.1.4 IF in Mode 1—4, N/A
AND OTSGs are being relied upon for heat removal,
THEN enter 72-hour time clock per TS 3.7.5 Condition B.

Time N/A Date N/A

2.1.5 Open EFW Test Recirc P-7B Isolation (CV-2869). BB

NOTE

- Check valve leakage is indicated by rising test header pressure and rising pump discharge piping temperature.
- A pressure spike may be indicated on PI-2888 when CV-2869 is opened. It may take 5-10 minutes for pressure to stabilize.

2.1.6 Monitor EFW Test Recirc PRESS for rising pressure. BB

2.1.7 IF indicated pressure on PI-2888 is >40 PSIG, THEN perform the following: N/A

A. Notify the Shift Manager.

N/A 1. Verify a WR/WO submitted.

B. Monitor EFW discharge pipe temperature for steam binding of EFW pump.

C. IF steam binding is indicated, THEN refer to "Relieving EFW Pump Steam Bind" section of this procedure and perform appropriate steps.

2.1.8 Record final EFW test recirc pressure in Table 1. BB

2.1.9 Record FW-13A and FW-13B backleakage results in Table 1. BB

CAUTION

Modulating valves may indicate full closed yet not be fully torqued closed thereby allowing leakage past valve.

2.1.10 Close CV-2670 (modulating valve) AND Hold control switch in CLOSE until valve torques closed. BB

A. Verify CV-2670 in AUTO. BB

2.1.11 Close CV-2626 (modulating valve) AND hold control switch in CLOSE until valve torques closed. BB

A. Verify CV-2626 in AUTO. BB

2.1.12 Place EFW P-7B to SG-A CNTRL (CV-2646) in HAND. BB

A. Close CV-2646. BB

2.1.13 N/A IF this is the regularly scheduled 18-month test, THEN inform the test engineer to start his non-intrusive test equipment on EFW Suction Line Check Valves (CS-293 and CS-294), (both simultaneously) in preparation for obtaining full open stroke verification data. N/A

2.2 Start P-7B by placing handswitch to START. BB

2.2.1 Record start time 0132. BB

2.3 Adjust EFW Test Recirc Control Valve (CV-2888) as necessary to obtain 520 to 550 GPM test flow, as indicated on P7B FLOW TO OTSG B (SPDS). BB

2.3.1 Record EFW Flow P-7B to SG-B (SPDS and FI-2648) in Table 2. BB

2.3.2 Record Alternate Position Verification for CV-2648 - "Open", in Table 7. BB

2.4 IF this is the regularly scheduled 18-month test, THEN inform the test engineer to stop his non-intrusive test equipment on CS-293 and CS-294. N/A

2.5 Check EFW Pump (P-7A) shaft to ensure shaft is not rotating. AC

2.5.1 Record in Table 2 Seating of P-7A min. recirc check (FW-61). BB

2.6 Stroke test EFW P-7B to SG-B CNTRL (CV-2648) closed as follows:

2.6.1 Place CV-2648 in HAND. BB

NOTE

CV-2648 stroke is performed by starting stopwatch when pushbutton is depressed and stopping stopwatch when valve position indicator stops at closed position (near 0%) while verifying consistent agreement with valve position demand and flow indication.

2.6.2 WHILE timing valve stroke AND monitoring valve position and flow, THEN close CV-2648. BB

2.6.3 Record measured closing time in Table 7. BB

2.6.4 Verify EFW Flow P-7B to SG-B (FI-2648) reduces to ~0 gpm AND record Alternate Position Verification for CV-2648 - "Closed", in Table 7. BB

2.7 In Table 3, record P-7B minimum recirc flow as indicated on EFW Pump P-7B Min Flow Recirc Indicator (FI-2801). BB

2.8 Stroke test EFW P-7B to SG-A CNTRL (CV-2646) open as follows:

NOTE

CV-2646 stroke is performed by starting stopwatch when pushbutton is depressed and stopping stopwatch when valve position indicator stops at open position (near 100%) while verifying consistent agreement with valve position demand and flow indication.

2.8.1 WHILE timing valve stroke AND monitoring valve position and flow, THEN open CV-2646. BB

2.8.2 Record measured opening time in Table 7. BB

2.9 Adjust EFW Test Recirc Pressure Control (CV-2888) as necessary to obtain 520 to 550 GPM test flow as indicated on P7B FLOW TO OTSG A (SPDS). BB

2.9.1 Record EFW Flow P-7B to SG-A (SPDS and FI-2646) in Table 3. BB

2.9.2 Record Alternate Position Verification for CV-2646 - "Open", in Table 7. BB

2.10 Stroke test EFW Flow Control (CV-2646) closed as follows:

NOTE

CV-2646 stroke is performed by starting stopwatch when pushbutton is depressed and stopping stopwatch when valve position indicator stops at closed position (near 0%) while verifying consistent agreement with valve position demand and flow indication.

2.10.1 WHILE timing valve stroke AND monitoring valve position and flow, THEN close CV-2646. BB

2.10.2 Record measured closing time in Table 7. BB

2.10.3 Verify EFW Flow P-7B to SG-A (FI-2646) reduces to ~0 gpm and record Alternate Position Verification for CV-2646 - "Closed", in Table 7. BB

2.11 Open CV-2646 (demand at 100% open). BB

2.12 Stroke test EFW Flow Control CV-2648 open as follows:

NOTE

CV-2648 stroke is performed by starting stopwatch when pushbutton is depressed and stopping stopwatch when valve position indicator stops at open position (near 100%) while verifying consistent agreement with valve position demand and flow indication.

2.12.1 WHILE timing valve stroke AND monitoring valve position and flow, THEN open CV-2648. BB

2.12.2 Record measured opening time in Table 7. BB

NOTE

The following steps consist of pump IST data collection requirements and will require flow to be adjusted 520 to 530 gpm.

2.13 Adjust EFW Test Recirc Pressure Control (CV-2888) as necessary to obtain 520 to 530 GPM test recirc flow at EFW Test Recirc Flow indicator (FI-2888). BB

2.14 After 2 minutes of pump operation perform the following:

- Record applicable data in Table 4. BB
- Take vibrometer readings per data sheet of this supplement. AC

2.15 Adjust CV-2888 until one of the following occurs: BB

- P-7B discharge pressure 1220 PSIG (PIS-2812 or SPDS)
- CV-2888 is full open

2.16 While adjusting **EFW Flow Control Valves** (CV-2646 and CV-2648) as follows, enter data and plot data points on the pump curve in this supplement.

NOTE

- This data is for pump performance evaluation and is not intended as acceptance criteria. See section 3.0 for acceptance criteria.
- With CV-2646 and CV-2648 both closed, the pump flow will be through the minimum recirculation line, as read on EFW Pump P-7B Min Flow Recirc indicator (FI-2801).

2.16.1 Close CV-2646 and CV-2648 to obtain minimum flow (FI-2801). BB

2.16.2 Adjust CV-2646 and CV-2648 as necessary to obtain ~300 GPM combined flow of EFW Test Recirc Flow indicator (FI-2888) and minimum recirc flow (FI-2801). BB

2.16.3 Adjust CV-2646 and CV-2648 as necessary to obtain ~400 GPM combined flow of FI-2888 and FI-2801. BB

2.16.4 Adjust CV-2646 and CV-2648 as necessary to obtain ~500 GPM combined flow of FI-2888 and FI-2801. BB

2.16.5 Adjust CV-2646 and CV-2648 as necessary to obtain ~600 GPM combined flow of FI-2888 and FI-2801. BB

2.16.6 Fully open CV-2646 AND CV-2648 to obtain combined full flow of FI-2888 and FI-2801. BB

2.17 Leave CV-2646 AND CV-2648 open for remainder of test. BB

NOTE
Bearing temperatures are considered stable when three consecutive readings at ten minute intervals vary no more than 3%.

2.18 IF this is the regularly scheduled 18-month test, OR is to prove operability after significant maintenance, THEN continue test until pump and motor bearing temperatures are stable. N/A N/A

2.18.1 Record applicable temperatures in Table 5. OTHERWISE mark N/A here and in Table 5. N/A

2.19 Record in Table 6 stroke of P-7B Brg Clng Rtn Ck (CS-1196). BB

2.20 WHEN P-7B has run for at least 10 minutes, THEN close CV-2869. BB

2.21 Stop P-7B. Record stop time 0210. BB

2.21.1 Record difference in P-7B start time and P-7B stop time as "P-7B Run Time" in Table 6. BB

2.22 IF RCS temperature is >280°F, THEN verify P-7B handswitch is in normal-after-stop. BB

2.23 Record in Table 6 stroking of the following valves. BB

- SG-A EFW Supply Line Check Valve (P-7B Disch) (FW-56A)
- SG-B EFW Supply Line Check Valve (P-7B Disch) (FW-56B)
- P-7B Recirc Check Valve (FW-10B)
- P-7B Min Recirc Check (FW-62)
- EFW Suction Line Check Valves (CS-293 and CS-294)

2.24 IF this is a regularly scheduled 18-month test, THEN obtain results of Component Engineering analysis on full open stroke verification of EFW Suction Line Check Valves (CS-293 and CS-294) and enter in Table 6. OTHERWISE mark N/A here and in Table 6. N/A N/A

SUPPLEMENT 11

2.25 Return system to normal as follows:

2.25.1 Verify CV-2869 is closed. BB

2.25.2 Open CV-2626. BB

A. Verify CV-2626 in AUTO. BB

2.25.3 Open CV-2670. BB

A. Verify CV-2670 in AUTO. BB

2.25.4 Verify CV-2646 open. BB

A. Place CV-2646 in AUTO. BB

2.25.5 Verify CV-2648 is open. BB

A. Verify CV-2648 in AUTO. BB

2.25.6 Verify CV-2888 valve position demand at or near zero. BB

A. Verify CV-2888 in AUTO. BB

B. Verify CV-2888 setpoint at 1220 psig. BB

2.26 IF installed, AC
THEN remove alternate test instrument(s) and obtain independent verification.

Independent verification Bob Operator

2.27 IF applicable, N/A
THEN clear TS 3.7.5 time clock entered for performance of this test.

Time N/A Date N/A

2.28 Record vibration data recorded in Table 5. AC

2.29 Review all calculations AND verify correct.

Reviewed and verified by:
(SRO) Lee Supervisor Date 9/10/03

2.30 Record AND review required trend data.

Recorded and reviewed by:
(SE/STA/SRO) Sally Engineer Date 9/10/03

2.30.1 IF available, SE
THEN attach copies of graphs.

SUPPLEMENT 11

3.0 ACCEPTANCE CRITERIA

3.1 Compare results/measured values observed during P-7B testing with "Acceptable Normal Range" and "Limiting Range For Operability". 55

Table 1

TEST QUANTITY	INSTRUMENT	MEASURED VALUES	ACCEPTABLE NORMAL RANGE	LIMITING RANGE FOR OPERABILITY	IS DATA WITHIN LIMITING RANGE? Circle YES or NO
Initial EFW Test Recirc Pressure	PI-2888	14 psig	N/A	N/A	N/A
P-7B Idle Suction Pressure	TG1002 12/25/08 SPDS	20 psig	N/A	N/A	N/A
Final EFW Test Recirc Pressure	PI-2888	14 psig	N/A	N/A	N/A
FW-13A & FW-13B Closure (backleakage)	Final Recirc Press minus initial Recirc Press	0 psig	<30 PSIG	<40 PSIG	YES NO

Table 2

TEST QUANTITY	INSTRUMENT	MEASURED VALUES	ACCEPTABLE NORMAL RANGE	LIMITING RANGE FOR OPERABILITY	IS DATA WITHIN LIMITING RANGE? Circle YES or NO
EFW Flow P-7B to SG-B	SPDS	535 GPM	N/A	520 to 550 gpm	YES NO
EFW Flow P-7B to SG-B	FI-2648	537 GPM	N/A	N/A	N/A
FW-61	N/A	(✓) if valve seating sat. (✓)		valve seats sat.	YES NO

Table 3

TEST QUANTITY	INSTRUMENT	MEASURED VALUES	ACCEPTABLE NORMAL RANGE	LIMITING RANGE FOR OPERABILITY	IS DATA WITHIN LIMITING RANGE Circle YES or NO
P-7B Minimum Recirc Flow	FI-2801	110 GPM	100-140 GPM	75-150 GPM	YES NO
EFW Flow P-7B to SG-A	SPDS	540 GPM	N/A	520 to 550 gpm	YES NO
EFW Flow P-7B to SG-A	FI-2646	543 GPM	N/A	N/A	N/A

SUPPLEMENT 11

3.1 (continued)

Table 4

TEST QUANTITY	INSTRUMENT	MEASURED VALUES	ACCEPTABLE NORMAL RANGE	LIMITING RANGE FOR OPERABILITY	IS DATA WITHIN LIMITING RANGE? Circle YES or NO
Running Suction Pressure	TG1002 12/25/08 SPDS	19 psig	N/A	>7 psig	YES NO
Discharge Pressure	SPDS	1423 psig	N/A	≥1220 psig	YES NO
Discharge Pressure	PIS-2812	1428 psig	N/A	N/A	N/A
EFW Test Recirc Flow	FI-2888	532 GPM	N/A	520 to 530 gpm	YES NO
Pump ΔP	Discharge press minus suct press (SPDS)	1404 psid	N/A	(1) 1209 to 1460.9 psid	YES NO
P-7B Minimum Recirc Flow	FI-2801	105 GPM	N/A	N/A	N/A
Motor Running Current	A-311 Ammeter	(1) C Ø 71.5 amp (2) A Ø 71.5 amp (3) B Ø 71.5 amp	N/A	N/A	N/A

Note 1 Design Basis Value for Pump ΔP is 1209 psid at 520 to 530 gpm.

SUPPLEMENT 11

3.1 (continued)

Table 5

TEST QUANTITY	INSTRUMENT	MEASURED VALUES	ACCEPTABLE NORMAL RANGE	LIMITING RANGE FOR OPERABILITY	IS DATA WITHIN LIMITING RANGE? Circle YES or NO
O.B. Motor Brg Vibration *(1)	Vibrometer	.027 IN/SEC	N/A	N/A	N/A
I.B. Motor Brg Vibration *(2)	Vibrometer	.045 IN/SEC	N/A	N/A	N/A
I.B. Pump Brg Vibration Vertical *(3)	Vibrometer	.035 IN/SEC	≤0.082 IN/SEC	≤0.198 IN/SEC	YES NO
I.B. Pump Brg Vibration Horizontal *(4)	Vibrometer	.046 IN/SEC	≤0.105 IN/SEC	≤0.252 IN/SEC	YES NO
O.B. Pump Brg Vibration Vertical *(5)	Vibrometer	.033 IN/SEC	≤0.102 IN/SEC	≤0.246 IN/SEC	YES NO
O.B. Pump Brg Vibration Horizontal *(6)	Vibrometer	.061 IN/SEC	≤0.152 IN/SEC	≤0.366 IN/SEC	YES NO
O.B. Pump Brg Vibration Axial *(7)	Vibrometer	.060 IN/SEC	≤0.207 IN/SEC	≤0.498 IN/SEC	YES NO
I.B. Pump Brg Temp *(8)	Pyrometer	N/A °F	<165 °F	165 °F	YES N/A NO
O.B. Pump Brg Temp *(9)	Pyrometer	N/A °F	<165 °F	165 °F	YES N/A NO

* See attached drawing.

SUPPLEMENT 11

3.1 (continued)

Table 6

TEST QUANTITY	INSTRUMENT	MEASURED VALUES	ACCEPTABLE NORMAL RANGE	LIMITING RANGE FOR OPERABILITY	IS DATA WITHIN LIMITING RANGE? Circle YES or NO
CS-1196	N/A	(6)(7) (✓) if valve stroke is satisfactory (✓)		Valve stroke satisfactory	YES NO
P-7B Run Time	Clock	38 MIN	≥10 minutes	≥5 minutes	YES NO
FW-56A	N/A	(2) (✓) if valve stroke is satisfactory (✓)		Valve stroke satisfactory	YES NO
FW-56B	N/A	(2) (✓) if valve stroke is satisfactory (✓)		Valve stroke satisfactory	YES NO
FW-10B	N/A	(2) (✓) if valve stroke is satisfactory (✓)		Valve stroke satisfactory	YES NO
		(5) (✓) if valve stroke is satisfactory (✓)		Valve stroke satisfactory	YES NO
FW-62	N/A	(5) (✓) if valve stroke is satisfactory (✓)		Valve stroke satisfactory	YES NO
CS-293 & CS-294 Partial Stroke	N/A	(3) (✓) if partial valve stroke is sat. (✓)		Valve stroke satisfactory	YES NO
CS-293 Full Stroke	(4)	(4) (✓) if full valve stroke is sat. N/A		N/A	N/A
CS-294 Full Stroke	(4)	(4) (✓) if full valve stroke is sat. N/A		N/A	N/A

Note 2 Full stroke is satisfactory when design flow is established.

Note 3 Partial stroke of one or both valves is satisfactory when flow is established.

Note 4 Analysis made by Component Engineering, during regularly scheduled 18-month test, based on data obtained with non-intrusive test equipment.

Note 5 Full stroke for recirc function is satisfactory when design recirc flow is established.

Note 6 CS-1196 full stroke is satisfactory when bearing temperature is within Acceptable Normal Range during regularly scheduled 18-month test.

Note 7 CS-1196 partial stroke is satisfactory when quarterly testing reveals no adverse observations on pump operation which would be associated with bearing performance (e.g. vibration, noise, excessive temps).

3.1.1 IF "NO" is circled in any of the tables in the preceding section, THEN perform the following: N/A

- Declare applicable component inoperable
- Initiate a Condition Report
- Immediately notify Shift Manager
- Initiate corrective action.
- Reference applicable Tech Spec LCO for required actions

SUPPLEMENT 11

3.1.2 IF any measured value does not fall within the "Acceptable Normal Range", THEN initiate corrective action. N/A

3.2 Stroke Criteria

3.2.1 Compare measured values/stroke times with "Acceptable Normal Range" and "Limiting Range for Operability". BB

Stopwatch M&TE No. DES-103 Cal Due Date 8-10-08

Stopwatch M&TE No._____ Cal Due Date_____

Table 7

Valve	CNTRL Panel	Test Direct	Alternate Position Verif (using flow)	Measured Value-Stroke Time (Nearest 1/10 Sec)	Accept Normal Range Time (Sec)	Limiting Range For Operability Time (Sec)	Is Data Within Limiting Range For Operability?	Design Bases Value
CV-2648	C09	Close	(✓) if flow ~0 gpm (✓)	10.7	8.9 - 14.7	17.7	YES NO	57.4
CV-2646	C09	Open	(✓) if flow ≥520 gpm (✓)	10.4	8.1 - 13.3	16.0 (1)	YES NO	N/A
CV-2646	C09	Close	(✓) if flow ~0 gpm (✓)	10.0	7.5 - 12.5	15.0	YES NO	57.4
CV-2648	C09	Open	(✓) if flow ≥520 gpm (✓)	10.3	8.7 - 14.5	17.4 (1)	YES NO	N/A

Note 1 Valve stroke time ≤ limiting value verifies proper fail safe operation.

3.2.2 IF "No" is circled in any space in the table above, THEN perform the following: N/A

- Declare that valve inoperable
- Initiate a Condition Report
- Immediately notify the Shift Manager
- Initiate corrective action
- Reference applicable Tech Spec LCO for required actions

3.2.3 IF any measured stroke time does not fall within the "Acceptable Normal Range", THEN immediately retest valve or declare that valve inoperable. Refer to "Operability" section of this procedure for additional guidance. N/A

Performed by Bob Bankner Operator Date/Time 9/10/08 0230

Al Cogs 9/10/08 0230

Hold vibrometer probe tip firmly against the survey point marker, perpendicular to the surface. Locations of markers are depicted.

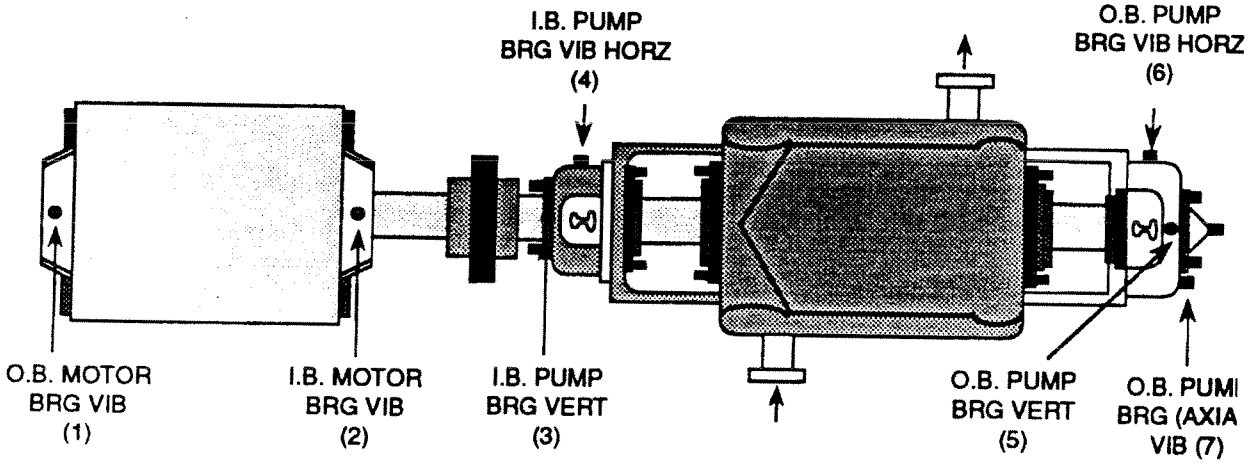

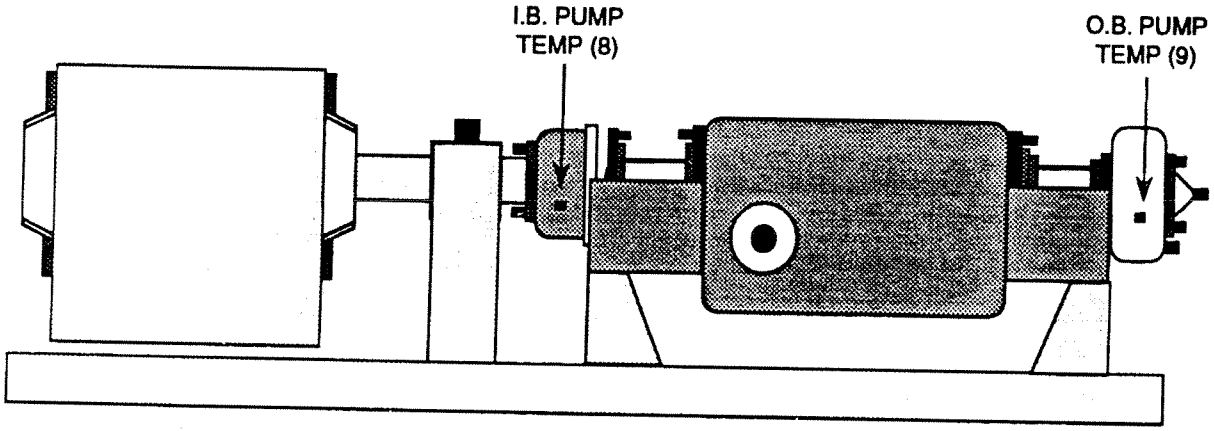

POINT NUMBER	VELOCITY IN/SEC
1	.027
2	.045
3	.035
4	.046
5	.033
6	.061
7	.060

Vibrometer No. DUA-006

Cal Due Date 12-22-08

Performed By Al Cook

SUPPLEMENT 11

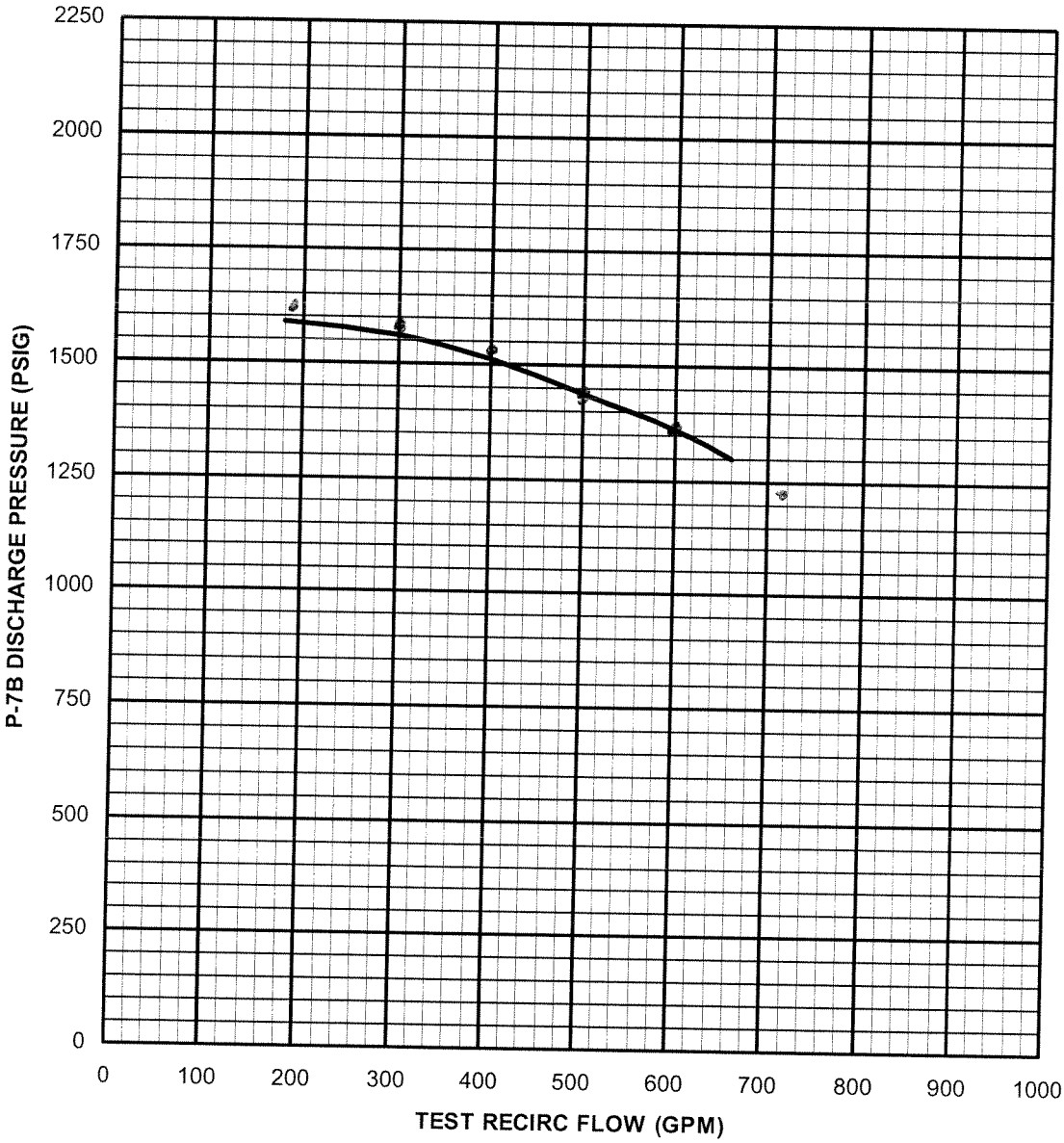

FI-2888	FI-2801	Flow Rate (gpm)	Pressure (psig)
200	125	(1) 190	1600
310	110	300	1575
410	105	400	1528
520	106	500	1440
620	100	600	1365
740	100	720	1237

Note 1 With CV-2646 and CV-2648 both closed, record flow as read on EFW Pump P-7B Min Recirc Flow (FI-2801).

SUPPLEMENT 11

4.0 SHIFT MANAGER REVIEW AND ANALYSIS

(circle one)

4.1 Do all measured values recorded in the Acceptance Criteria section fall within the specified "Limiting Range For Operability"? YES NO

4.2 Do all measured values recorded in Acceptance Criteria section fall within the "Acceptable Normal Range"? YES NO

4.2.1 IF "NO" AND reason is pump related, THEN initiate corrective action and schedule to double test frequency.

4.3 Do all measured valve stroke times recorded in Acceptance Criteria section fall within the "Acceptable Normal Range"? YES NO

4.3.1 IF "NO", and successful retest or engineering assessment of valve was performed, THEN document results below.

4.3.2 IF "NO", and retest was not successful OR engineering assessment shows valve to be inoperable, THEN write a Condition Report, initiate corrective action and reference applicable Tech Spec for LCO.

4.4 IF answer to either 4.1, 4.2 or 4.3 is "NO", THEN describe the action taken below: _____

TG1002 (cal due date: 12/25/08) used in place of SPDS P-7B suction pressure due to SPDS point failure (WR 0053062)

4.5 Has this equipment been proven operable per the Acceptance Criteria? YES NO

4.6 Have all the administrative requirements of this test been satisfied (i.e., all initial blocks initialed or N/A'd, all data entered, cal due dates listed, applicable signature spaces signed, etc.)? YES NO

SHIFT MANAGER _____ DATE _____

A4. Radiation Control

M/R

K/A 2.3.4

Knowledge of radiation exposure limits under normal or emergency conditions

A1JPM-RO-DOSE-SVY2

JOB PERFORMANCE MEASURE

Unit: 1 Rev # 2 Date: 6/26/2008

TUOI NUMBER: A1JPM-RO- DOSE-SVY2

System/Duty Area: Administrative Topic-Radiation Control

Task: Calculate Stay times for yourself and another operator

KA Value RO 3.2 SRO 3.7 KA Reference 2.3.4

Approved For Administration To: RO ☒ SRO ☒

Task Location: Inside CR: Outside CR: Classroom: ☒

Suggested Testing Environment And Method (Perform Or Simulate): Perform

Plant Site: Simulator: Classroom: Perform

Position Evaluated: RO: X SRO:

Actual Testing Environment: Plant Site: Classroom X

Simulator:

Testing Method: Perform: X

Simulate:

Approximate Completion Time In Minutes: 15 Minutes

Reference(S) HP Survey Map of P36C, Pump Room 54.

Examinee's Name: SSN:

Evaluator's Name:

The Examinee's performance was evaluated against the standards contained in this JPM and is determined to be:

Satisfactory: Unsatisfactory:

Performance Checklist Comments:

Start Time Stop Time Total Time

Signed Date:

Signature indicates this JPM has been compared to its applicable procedure by a qualified individual (not the examinee) and is current with that revision.

THE EXAMINER SHALL REVIEW THE FOLLOWING WITH THE EXAMINEE:

The examiner shall review the "Briefing Checklist - System Walkthrough" portion of OP 1064.023 Attachment 6 with the examinee.

JPM INITIAL TASK CONDITIONS:

You are an WCO with the plant at full power. A hot spot has developed on Makeup PUMP P36C. You and another WCO will be working in the vicinity of the reduction gear assembly in order to flush the lines and reduce the hot spot radiation field.

Using the supplied survey map, determine the individual stay times **for yourself AND the other WCO** without exceeding the annual administrative dose limit (Ignore dose received during transit). You have an accumulated annual Whole Body dose of 1905 mR (ANO records). The other WCO has an accumulated annual Whole Body dose of 1790 mR (ANO records). No additional dose has been received at any other site.

Also, calculate stay times if the air in the pump room was contaminated with a level of 0.29 DAC (stochastic) assuming no respirators are used.

Calculations should be based on ANO Unit 1 Administrative dose limits. **Provide answers with 3 significant figures (example 4.51 hours).** Do not consider ALARA task requirements. Any required dose extensions have been processed and approved.

TASK STANDARD:

The examinee has correctly determined the stay times for himself and the other WCO on the assignment.

TASK PERFORMANCE AIDS:

HP Survey map of P36C Pump Room, Room number 54.

SIMULATOR SETUP:

N/A

INITIATING CUE: Determine the Stay time for you and the other WCO on the job. Also determine the stay time if the air in the pump room was contaminated with a level of 0.29 DAC (stochastic) assuming no respirators are used. **Provide answers with 3 significant figures (example 4.51 hours).**

CRITICAL ELEMENTS (c): 1,2, and 3

C	PERFORMANCE CHECKLIST	STANDARD	N/A	SAT	UN SAT
C	1. Determine the HIGHEST general area dose rate in the area of the reduction gear assembly to be used from the survey map.	Examinee has determined the HIGHEST general area dose rate in the area of the reduction gear assembly to be used from the survey map of P36C pump room. (80 mR/hr)	___	___	___
C	2. Determine Stay time (to 3 significant figures) with no airborne contamination for both operators. **Key**: Max dose at ANO1 is 2000 mR AO1 has 1905mR, =>allowed dose 95mR AO2 has 1700mR, =>allowed dose 300mR $\frac{95mR}{80mR/hr}$ = 1.18 hr, $\frac{300mR}{80mR/hr}$ = 3.75 hr	Examinee has determined that the stay time for him/her is 1.18 hrs and the stay time for the other WCO is 3.75 hrs plus or minus 0.01 hours.	___	___	___
C	3. Determine Stay time(to 3 significant figures) WITH airborne contamination for both operators. 1DAC = 2.5mR/hr => 0.29DAC =>0.725mR/hr Total rate = 80mR/hr + 0.725mR/hr = 80.725mR/hr $\frac{95mR}{60.725mR/hr}$ = 1.17 hr $\frac{300mR}{80.725mR/hr}$ = 2.96 hr	Examinee has determined that the stay time for him/her is 1.17hrs and the stay time for the other WCO is 3.71 hrs plus or minus 0.01 hours.	___	___	___

EXAMINER'S CUE: This concludes the JPM.

END

EXAMINEE'S COPY

INITIAL CONDITIONS:

You are an WCO with the plant at full power. A hot spot has developed on Makeup PUMP P36C. You and another WCO will be working in the vicinity of the reduction gear assembly in order to flush the lines and reduce the hot spot radiation field.

Using the supplied survey map, determine the individual stay times and another WCO without exceeding the annual administrative dose limit (Ignore dose received during transit). You have an accumulated annual Whole Body dose of 1905 mR (ANO records). The other WCO has an accumulated annual Whole Body dose of 1700 mR (ANO records). No additional dose has been received at any other site.

Also calculate stay times if the air in the pump room was contaminated with a level of 0.29 DAC (stochastic) assuming no respirators are used.

Calculations should be based on ANO Unit 1 EN-RP-201 Administrative dose limits. **Provide answers with 3 significant figures (example 4.51 hours).** Do not consider ALARA task requirements. Any required dose extensions have been processed and approved.

INITIATING CUE:

Determine the Stay time for you and the other AO on the job. Also determine stay time if the air in the pump room was contaminated with a level of 0.29 DAC (stochastic) assuming no respirators are used. **Provide answers with 3 significant figures (example 4.51 hours).**

MAP NUMBER: 1A2-16 LOCATION: U1 AUX 335' EL. P36C PUMP ROOM, ROOM NUMBER 54

Aux building
posted: RM,RWPR

335 posted RA

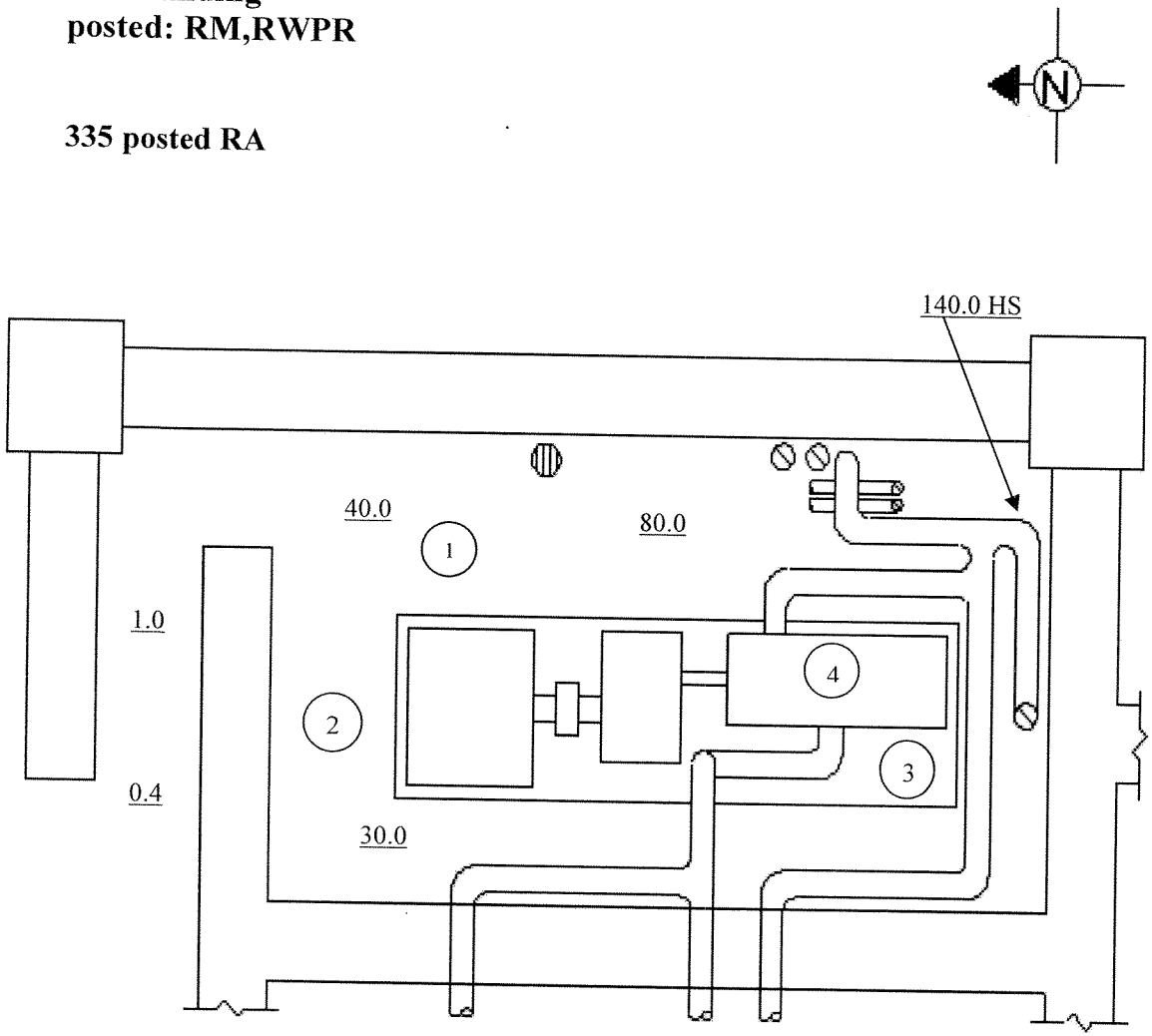

Smear Data

DPM/ 100cm2

No.	Activity
1	20,000
2	30,000
3	60,000
4	10,000

Alpha Smears DPM/100cm2

No.	Activity

Rx. % 100
Date 01/12/2004
Time 0000:00

Dose Rate Inst. HP-DR-170

Cal Due Date 12/31/2008

Dose Rate Inst. #2 RM-065

Cal Due Date 12/31/2008

Count Inst. RO-705

Cal Due Date 12/31/2008

Bkg. 80 cpm D/C 10

Count Inst. #2

Cal Due Date 12/31/2008

Bkg. 90 cpm D/C 10

Survey Frequency:
____ Daily
____ Bi-Weekly
X Monthly
____ Quarterly
____ Job Coverage
____ Other

RWP # 4005/1

Surveyor:
John Public 1234
Badge

RP Supervisor Review:
Imma N. Charge

DANI # 011256

Page 1 of 1

All Radiation values are in mrem/hour unless otherwise noted.
12.5 denotes gamma general area dose rates.
Smear contamination values are in DPM/100 Sqcm unless otherwise noted.
*12/13 Denotes Gamma Contact/Far reading (30 cm)
* 12 Denotes contact dose rate (gamma) *12 B Denotes Beta Contact Dose Rate
Form to be retained for records

H. S. Denotes Hot Spot Readings
O Denotes smear location (100 sqcm.)
☐ Denotes large area smear location

STUDENT Handout

A5. Emergency Procedures/Plan

N/S

K/A 2.4.41

Knowledge of the Emergency Action Level thresholds and classification

A1JPM-SRO-EAL11

JOB PERFORMANCE MEASURE

Unit: 1 Rev # 1 Date: 7/03/2008

TUOI NUMBER: A1JPM-SRO-EAL11

System/Duty Area: Administrative Topic-Emergency Procedures/Plan

Task: Determine Emergency Action Level

JA#

KA Value RO 2.9 SRO 4.6 KA Reference 2.4.41

Approved For Administration To: RO ☐ SRO ☒

Task Location: Inside CR: ☒ Outside CR: ☐ Both: ☐

Suggested Testing Environment And Method (Perform Or Simulate): Simulate

Plant Site: Simulator: Perform Lab:

Position Evaluated: RO: SRO: X

Actual Testing Environment: Simulator: X Plant Site: Lab

Testing Method: Simulate: Perform: X

Approximate Completion Time In Minutes: 20 Minutes **TIME CRITICAL**

Reference(S): 1903.010 Emergency Action Level Classification, 1903.011, Emergency Response Notifications

Examinee's Name: SSN:

Evaluator's Name:

The Examinee's performance was evaluated against the standards contained in this JPM and is determined to be:

Satisfactory: Unsatisfactory:

Performance Checklist Comments:

Start Time Stop Time Total Time

Signed Date:

Signature indicates this JPM has been compared to its applicable procedure by a qualified individual (not the examinee) and is current with that revision.

THE EXAMINER SHALL REVIEW THE FOLLOWING WITH THE EXAMINEE:

The examiner shall review the "Briefing Checklist - System Walkthrough" portion of OP 1064.023 Attachment 6 with the examinee.

JPM INITIAL TASK CONDITIONS:

Loss of H2 bus when "B" RCP is secured due to seal degradation at ~60% power.
RPS failed to automatically trip the Rx, requiring a manual RX trip on a loss of two RCP's >55% power.

~40 gpm RCS leak developed in the RX building.

TASK STANDARD:

1. The examinee correctly classifies this event as an **Alert** per 6.2 makes notifications to plant personnel per 1903.011M.
2. **TIME CRITICAL MUST MAKE AN ALERT CALL 6.2 FINISH 1903.011M through step 6 WITHIN 20 MINUTES of START of JPM (5 minutes to recognize EAL entry and 15 minutes to make call and notifications.)**

TASK PERFORMANCE AIDS:

1903.010 Attachments 1 and 3, 1903.011 Attachment 2, and 1903.011M

SIMULATOR SETUP:

N/A

INITIATING CUE: For the given plant conditions, determine the applicable EAL classification and initiate notifications per the applicable Shift Manager Emergency Direction and Control Checklist in 1903.011.

CRITICAL ELEMENTS (c): 3, 4, 5, and 6

C	PERFORMANCE CHECKLIST	STANDARD	N/A	SAT	UN SAT
	1. Compare event conditions with the Index of EALs, Attachment 1 of 1903.010, Emergency Action Level Classification.	Turned to Attachment 1 of 1903.010, Index of EALs.	___	___	___
	2. Turn to appropriate EAL and compare EAL criteria with event conditions.	Turned to a specific EAL in Safety System Function, Attachment 3 of 1903.010.	___	___	___
C	3. Declare the emergency classification.	Declared or stated the event is an ALERT per EAL 6.2, based on valid RPS trip set point was exceeded and RPS fails to initiate an automatic trip and manual trip was successful. **TIME CRITICAL WITHIN 15 MINUTES OF STUDENT REGONIZING EAL ENTERY**	___	___	___
NOTE; Examinee may mention he meets EAL 2.1 criteria due to RCS leakage which is a NUE put does not need to call this EAL alert is a higher classification than NUE.					
C	4. Begin completion of form 1903.011M, Alert Emergency Direction and Control Checklist for Shift Manager.	Began completion of form 1903.011M Alert Emergency Direction and Control Checklist for Shift Manager. Examinee should fill in the data on items 1 and 2.	___	___	___
C	5. Direct affected Unit Shift Engineer to activate CNS per Attachment 9.	Examinee should simulate directing Unit 1 SE to activate CNS per Attachment 9 of 1903.011M, step 3.1.			
NOTE: Examiner should Role play as Unit 1 Shift Engineer, acknowledging the direction from CRS to activate CNS.					
C	6. Direct the unaffected Unit Shift Engineer to perform notifications using form 1903.011-Y, Emergency Class Initial Notification Message.	**TIME CRITICAL WITHIN 15 MINUTES OF STUDENT REGONIZING EAL ENTERY** Examinee should simulate directing Unit 2 SE to perform notifications using form 1903.011-Y, Emergency Class Initial Notification Message.			

C	PERFORMANCE CHECKLIST	STANDARD	N/A	SAT	UN SAT
NOTE: Examiner should Role play as Unit 2 Shift Engineer, acknowledging the direction from CRS to perform notifications as directed.					
	7. (Simulate) Announce emergency on plant paging system.	Used plant-paging system to (simulate) make announcement per step 6 of form 1903.011M.	___	___	___
EXAMINER'S CUE: This concludes the JPM.					

END

ATTACHMENT 3
UNIT 1
SAFETY SYSTEM FUNCTION

6.2

CONDITION:

Reactor Protection System Failure to Complete an Automatic Trip

EMERGENCY CLASSIFICATION:

Alert

MODES 1-2

CRITERIA:

1. A valid RPS trip setpoint is exceeded on ANY TWO RPS channels and the RPS fails to initiate and complete an automatic trip that brings the reactor subcritical.

AND

2. DSS trip or subsequent efforts to manually trip the Reactor from the Control Room and bring it subcritical are successful.

RELATED EALS:

	TAB
RPS Failure to Complete a Manual Trip	6
Core Melt	1
Core Damage Indicated with an ICC Condition	1
Loss of or Challenge to 3 Fission Product Barriers	1

-KEY-

ATTACHMENT 3
UNIT 1
RCS LEAKAGE

2.1

CONDITION:

RCS Leakage greater than Technical Specification limits requiring a plant shutdown or cooldown

EMERGENCY CLASSIFICATION:

Notification of Unusual Event

MODES 1-4

CRITERIA:

NOTE

RCS leakage is defined as a loss of RCS inventory due to a leak in the RCS or a supporting system that is not or cannot be isolated within 10 minutes.

1. RCS leakage exceeds ANY of the following:

   a. No pressure boundary LEAKAGE
   b. 1 gpm unidentified LEAKAGE
   c. 10 gpm identified LEAKAGE

AND

2. A plant shutdown or cooldown has commenced.

RELATED EALS:

	TAB
RCS Leakage >Normal Makeup Capacity (50 gpm)	2
TS LCOs	6
OTSG Tube Leak	3

-KEY-

ALERT

This form is intended to be used by the person with Emergency Direction and Control when an Alert has been declared.

☑1. Alert declared: Unit 1 Time_____ Date_____

****EMERGENCY CLASSIFICATION ANNOUNCEMENT SHOULD BE MADE WITHIN 15 MINUTES OF THE DECLARATION****

☑2. Conditions warranting declaration of an Alert:
EAL No. 6.2 Description: Failure of RPS to complete an Automatic Trip

☐3. Notification Communicator

☑3.1 **Single/Dual Unit Emergency**

☑1. Activate CNS

IF CNS already activated for an Alert or higher emergency class, **THEN** go to step 2 below.

Direct one of the unit's Shift Engineers (SE of unit with ED&C preferred) to activate CNS in accordance with Attachment 9 of this procedure.

☑ Use Section 8 of Attachment 9 if ERO is at risk due to site conditions (e.g. security event, toxic gas release, major onsite fire, etc). ERO will respond to the Alternate EOF.

☑ Use Section 1 of Attachment 9 for normal ERO callout.

☑2. Direct one of the unit's Shift Engineers (SE from unit that does not have ED&C or unaffected unit is preferred) to perform notifications using Form 1903.011-Y, Emergency Class Initial Notification Message.

☐3.2 **Additional Notification Communicator is Available**

☐1. **IF** a Notification Communicator is available, **THEN** request the Notification Communicator to perform notifications in accordance with Form 1903.011-Y, Emergency Class Initial Notification Message.

☑4. Inform the Control Room staff of the Emergency Class declaration.

☑5. Inform both units' operators in the field to log onto the Emergency RWP.

- KEY -

☑6. Make the following announcement over the plant paging system (dial 197):

"Attention all personnel. Attention all personnel. An Alert Emergency Class has been declared on Unit ___I___ (One/Two). Emergency response personnel report to your designated assembly areas. All other personnel continue normal activities unless instructed otherwise."

☐6.1 Dial 197 and repeat the above announcement.

☐6.2 Make the above announcement over the EOF Public Address System (dial 199 and pause approximately 15 sec.)

☐7. **IF** on-site personnel hazards exits,
(P-15456) **THEN** direct implementation of protective actions as necessary.

☐7.1 Refer to Form 1903.030C, "Localized Evacuation Checklist", to determine if a localized evacuation will be performed.

☐8. **IF** an approach route to the plant site should be avoided, **THEN** instruct Security to direct incoming traffic. (Examples of this include security situations in which onsite/offsite personnel are directed to the EOF, radiological releases that prohibit entry through the Primary Access Point.)

☐9. Direct Chemistry personnel (Initial Dose Assessor) to the Control Room to implement procedure 1904.002, "Offsite Dose Projection - RDACS Computer Method".

Performed by: _____

-KEY-

EXAMINEE'S COPY

INITIAL CONDITIONS:

Reactor power reduced to 60% to secure "B" RCP due to lower seal degradation.

When "B" RCP was secured H2 bus tripped.

ATC operator manually tripped the Reactor one minute after the Loss of the H2 bus.

Reactor trip immediate actions were complete.

Shift Engineer reports a 40 gpm leak into the Reactor building from "B" RCP seal.

INITIATING CUE:

For the given plant conditions, determine the applicable EAL classification and initiate notifications per the applicable Shift Manager Emergency Direction and Control Checklist in 1903.011.

EXAMINEE'S COPY

INITIAL CONDITIONS:

Reactor power reduced to 60% to secure "B" RCP due to lower degradation.

When "B" RCP was secured H2 bus tripped.

ATC operator manually tripped the Reactor one minute after the Loss of the H2 bus.

After Reactor trip immediate actions were complete. Shift Engineer reports a 40 gpm leak into the Reactor building from "B" RCP seal.

INITIATING CUE:

For the given plant conditions, determine the applicable EAL classification and initiate notifications per the applicable Shift Manager Emergency Direction and Control Checklist in 1903.011.

Facility: ANO-1 Date of Examination: 9-8-2008

Exam Level: RO **X** SRO-I ☐ SRO-U ☐ Operating Test No.: 2008-1

Control Room Systems@ (8 for RO); (7 for SRO-I); (2 or 3 for SRO-U, including 1 ESF)

System / JPM Title	Type Code*	Safety Function
S1. A1JPM-RO-CRD03 Transfer a Group of Rods to the Auxiliary Power Supply 003 AA2.01 (RO 3.7/SRO 3.9)	A/D/S	1 Reactivity Control
S2. A1JPM-RO-MUP01 Isolate Letdown, Restore Makeup and Seal Injection 004 A4.06 (RO 3.6/SRO 3.1)	D/E/L/S	2 Reactor Coolant System Inventory Control
S3. A1JPM-RO-PZR05 CONTROL RCS PRESSURE IN MANUAL IN RESPONSE TO RCS PRESSURE HI ANNUNCIATOR 010 A3.02 (RO 3.6/SRO 3.5)	N/A/S	3 Reactor Pressure Control
S4. A1JPM-RO-DHR03 Establish Decay Heat Removal Using P-34A 005 A4.01 (RO 3.6/SRO 3.4)	A/D/L/S	4 Heat Removal From Reactor Core (Primary)
S5. A1JPM-RO-HYD01, Place Hydrogen Recombiner M-55A in operation 028 A4.01 (RO 4.0/SRO 4.0)	D/EN/P/S	5 Containment Integrity
S6. A1JPM-RO-EDG04 Emergency Diesel Generator (EDG) System 064 A4.07 (RO 3.4/SRO 3.4)	A/D/EN/S	6 Electrical

S7. A1-JPM-RO-RPS05 Place Channel "A" in a Tripped Condition B/W E02.EA1.1 (RO 4.0/SRO 3.6)	D/E/S	7 Instrumentation
S8. A1JPM-RO-ICW01 Contingency Actions for Loss of Two ICW Pumps 008 A2.01 (RO 3.3/SRO 3.6)	D/L/P/S	8 Plant Service Systems
In-Plant Systems@ (3 for RO); (3 for SRO-I); (3 or 2 for SRO-U)		
S9. A1JPM-RO-EFW03 Relieve steam binding of an Emergency Feedwater Pump 061 K5.05 (RO 2.7/SRO 3.2)	D/E/R/EN	4 Heat Removal From Reactor Core (Secondary)
S10. A1JPM-RO-RPS06 Remove Power from CRD System Due to "D" RPS channel trip relay failure. 012 A2.06 (RO 4.4/SRO 4.7)	N	7 Instrumentation
S11. ANO-1-JPM-RO-GRW01, Waste Gas Decay Tank release 071 A4.26 (RO 3.1/SRO 3.9)	D/P/R	9 Radioactivity Release
@ All RO and SRO-I control room (and in-plant) systems must be different and serve different safety functions; all 5 SRO-U systems must serve different safety functions; in-plant systems and functions may overlap those tested in the control room.		

* Type Codes	Criteria for RO / SRO-I / SRO-U
(A)lternate path	4-6 / 4-6 / 2-3
(C)ontrol room	≤ 9 / ≤ 8 / ≤ 4
(D)irect from bank	≥ 1 / ≥ 1 / ≥ 1
(E)mergency or abnormal in-plant	- / - / ≥1 (control room system)
(EN)gineered safety feature	≥ 1 / ≥ 1 / ≥ 1
(L)ow-Power / Shutdown	≥ 2 / ≥ 2 / ≥ 1
(N)ew or (M)odified from bank including 1(A)	≤ 3 / ≤ 3 / ≤ 2 (randomly selected)
(P)revious 2 exams	≥ 1 / ≥ 1 / ≥ 1
(R)CA	
(S)imulator	

Facility: ANO Unit 1 Date of Examination: 9/5/2008

Exam Level: RO ☐ SRO-I ☐ SRO-U X Operating Test No.: 2008-1

Control Room Systems@ (8 for RO); (7 for SRO-I); (2 or 3 for SRO-U, including 1 ESF)		
System / JPM Title	Type Code*	Safety Function
S3. A1JPM-RO-PZR05 CONTROL RCS PRESSURE IN MANUAL IN RESPONSE TO RCS PRESSURE HI ANNUNCIATOR 010 A3.02 (RO 3.6/SRO 3.5)	N/A/S	3 Reactor Pressure Control
S4. A1JPM-RO-DHR03 Establish Decay Heat Removal Using P-34A 005 A4.01 (RO 3.6/SRO 3.4)	A/D/L/S	4 Heat Removal From Reactor Core (Primary)
S6. A1JPM-RO-EDG04 Emergency Diesel Generator (EDG) System 064 A4.07 (RO 3.4/SRO 3.4)	A/D/EN/S	6 Electrical
In-Plant Systems@ (3 for RO); (3 for SRO-I); (3 or 2 for SRO-U)		
S9. A1JPM-RO-EFW03 Relieve steam binding of an Emergency Feedwater Pump 061 K5.05 (RO 2.7/SRO 3.2)	D/E/R/EN	4 Heat Removal From Reactor Core (Secondary)
S10. A1JPM-RO-RPS06 Remove Power from CRD System Due to "D" RPS channel trip relay failure. 012 A2.06 (RO 4.4/SRO 4.7)	N	7 Instrumentation

@ All RO and SRO-I control room (and in-plant) systems must be different and serve different safety functions; all 5 SRO-U systems must serve different safety functions; in-plant systems and functions may overlap those tested in the control room.

* Type Codes	Criteria for RO / SRO-I / SRO-U

(A)lternate path	4-6 / 4-6 / 2-3
(C)ontrol room	
(D)irect from bank	≤ 9 / ≤ 8 / ≤ 4
(E)mergency or abnormal in-plant	≥ 1 / ≥ 1 / ≥ 1
(EN)gineered safety feature	- / - / ≥1 (control room system)
(L)ow-Power / Shutdown	≥ 1 / ≥ 1 / ≥ 1
(N)ew or (M)odified from bank including 1(A)	≥ 2 / ≥ 2 / ≥ 1
(P)revious 2 exams	≤ 3 / ≤ 3 / ≤ 2 (randomly selected)
(R)CA	≥ 1 / ≥ 1 / ≥ 1
(S)imulator	

S1. Reactivity Control

A/D/S

K/A 003 AA2.01

A1JPM-RO-CRD03
Transfer a Group of rods to the Auxiliary power supply

RO only

JOB PERFORMANCE MEASURE

Unit: 1 Rev # 8 Date: _____

JPM ID: A1JPM-RO-CRD03

System/Duty Area: Control Rod Drive System

Task: Transfer a Group of Rods to the Auxiliary Power Supply

JTA# ANO1-RO-CRD-NORM-12, ANO1-RO-AOP-OFFNORM-15, ANO1-RO-EOP-EMERG-4, ANO1-SRO-EOP-EMERG-2

KA Value RO 3.7 SRO 3.9 KA Reference: 003 AA2.01

Approved For Administration To: RO X SRO X

Task Location: Inside CR X Outside CR _____ Both _____

Suggested Testing Environment and Method (Perform or Simulate):

Plant Site: _____ Simulator: Perform Lab: _____

Position Evaluated: RO: _____ SRO: _____

Actual Testing Environment: Plant Site _____ Simulator _____ Lab _____

Testing Method: Perform _____ Simulate _____

Approximate Completion Time in Minutes: 10 Minutes

Reference(s): 1105.009 Section 8.0 Transfer to Auxiliary Supply, 1203.003 CRD Malfunction , 1202.001 Reactor Trip

Examinee's Name: _____ SSN: _____

Evaluator's Name: _____

The Examinee's performance was evaluated against the standards contained in this JPM and is determined to be:

Satisfactory: _____ Unsatisfactory: _____

Performance Checklist Comments:

_____

_____

_____

Start Time _____ Stop Time _____ Total Time _____

*Signed _____ Date _____

*Signature indicates this JPM has been compared to its applicable procedure by a qualified individual (not the examinee) and is current with that revision.

JPM ID: A1JPM-RO-CRD03

THE EXAMINER SHALL REVIEW THE FOLLOWING WITH THE EXAMINEE:

JPM INITIAL TASK CONDITIONS:

The ICS is in manual per 1105.004 Section 7.0 "Transferring ICS Control Stations to HAND."

SIMULATOR SETUP:

- ICS in HAND per 1105.004 Section 7.0.
- Triggers may be used. Intent is to have the simulator ready to drop three control rods in Group 4 when the Manual Transfer switch is depressed at step 8.9 of 1105.009.
- Use malfunctions: RD280, RD302 and RD306

TASK STANDARD:

This is an alternate success path JPM. Reactor is tripped and immediate actions performed from memory.

TASK PERFORMANCE AIDS:

1105.009 Section 8.0.

JPM ID: A1JPM-RO-CRD03

INITIATING CUE: The CRS/SM directs you to transfer Group 4 rods to the Auxiliary Power Supply in accordance with 1105.009 Section 8.0.

CRITICAL ELEMENTS (C): 2, 3, 5, 6, 7, 8, 9, 11

(C)	PERFORMANCE CHECKLIST	STANDARD	N/A	SAT	UN SAT
	1. Verify transfer reset lamp is ON and TR CF lamp is OFF. POSITIVE CUE: Transfer reset lamp is ON and TR CF lamp is OFF.	On CRD Diamond Panel, condition of both lights was checked. Transfer reset lamp was ON and TR CF lamp was OFF.	___	___	___
C	2. Place Group select switch to Group 4. POSITIVE CUE: Group select switch is in Group 4 position.	On CRD Diamond Panel, Group Select Switch was placed in Group 4 position.	___	___	___
C	3. Set Single Select Switch to ALL. POSITIVE CUE: Single Select Switch is in ALL position.	On CRD Diamond Panel, Single Select Switch was selected to ALL.	___	___	___
	4. Set Auto/Manual Switch to Manual. POSITIVE CUE: Manual lamp is ON.	On CRD Diamond Panel, Manual mode verified. MANUAL lamp verified ON.	___	___	___
C	5. Set SEQ.-SEQ OR. switch to SEQ. OR position. POSITIVE CUE: SEQ OR backlight lamp is ON.	On CRD Diamond Panel, SEQ.-SEQ OR. switch was selected to SEQ. OR position.	___	___	___
C	6. Set Group/Auxiliary Switch to Auxiliary. POSITIVE CUE: AUX PB backlight is verified on and Control On lamp is lighted for Group 4.	On CRD Diamond Panel, Group/AUX PB was selected to AUX.	___	___	___
(C)	7. Set Speed Select Switch to JOG. POSITIVE CUE: SY backlight is ON.	On CRD Diamond Panel, Speed Select Switch was selected to JOG position.	___	___	___
C	8. Set Clamp/Clamp Release Switch to CLAMP. POSITIVE CUE: CLAMP CONFIRM lamp on.	On CRD Diamond Panel, selected Clamp/Clamp Release Switch to CLAMP.	___	___	___

Note to Simulator Operator:
Activate Dropped Rod malfunctions when Group 4 control on indicating lights on PI panel come on.

(C)	PERFORMANCE CHECKLIST	STANDARD	N/A	SAT	UN SAT
(C)	9. Press Manual Transfer Switch. POSITIVE CUE: Manual Transfer Switch is depressed. TR CF lamp comes on, and Group 4 Control-on White lights on the CRD Position Indicating Panel on.	On CRD Diamond Panel, manual transfer PB was depressed.	___	___	___
Note to evaluator: If simulating task, inform examinee that Group 4 rods #3, #5, and #7 rod bottom (green) lights are on.					
	10. Identify dropped rods. FAULTED CUE: Rod bottom lights ON for Group 4 Rods #3, #5, and #7.	Identified dropped rods by observing the rod bottom lights on C-13 PI panel.	___	___	___
C	11. Perform Rx Trip immediate actions. • Manually Trip Rx. A. Verify all rods inserted AND Reactor power dropping. • Manually trip Turbine. A. Verify Turbine throttle and governor valves closed. • Check adequate SCM. POSITIVE CUE: • All rods inserted AND reactor power is dropping. • Turbine throttle and governor valves are closed. • SCM is adequate at 50°F and rising. NEGATIVE CUE: Power stabilizes at ~80% if no manual runback or power lowering as operator manually runs plant back.	Tripped the reactor by depressing the reactor trip pushbutton. • Verified all rods inserted AND Reactor power dropping. Depressed the Turbine manual trip pushbutton. • Verified Turbine throttle and governor valves closed. • Checked SCM adequate.	___	___	___
EXAMINER NOTE: When step 3 of 1202.001 (immediate actions) is complete, inform the examinee the JPM is complete.					

END

JPM ID: A1JPM-RO-CRD03

INITIAL CONDITIONS:

The ICS is in manual per 1105.004 Section 7.0 "Transferring ICS Control Stations to HAND."

INITIATING CUE:

The CRS/SM directs you to transfer Group 4 rods to the Auxiliary Power Supply in accordance with 1105.009 Section 8.0.

ENTERGY OPERATIONS INCORPORATED
ARKANSAS NUCLEAR ONE

TITLE: **CRD SYSTEM OPERATING PROCEDURE**	DOCUMENT NO. **1105.009**	CHANGE NO. **026**
SET #	WORK PLAN EXP. DATE **N/A**	TC EXP. DATE **N/A**
	SAFETY-RELATED ☒YES ☐NO	IPTE ☒YES ☐NO
	TEMP ALT ☐YES ☒NO	LEVEL OF USE ☒ CONTINUOUS ☐ REFERENCE ☐ INFORMATIONAL
	PROGRAMMATIC EXCLUSION PER EN-LI-100 ☐YES ☒NO	

When you see these *TRAPS*

- **Time Pressure**
- **Distraction/Interruption**
- **Multiple Tasks**
- **Over Confidence**
- **Vague or Interpretive Guidance**
- **First Shift/Last Shift**
- **Peer Pressure**
- **Change/Off Normal**
- **Physical Environment**
- **Mental Stress (Home or Work)**

Get these *TOOLS*

- **Effective Communication**
- **Questioning Attitude**
- **Placekeeping**
- **Self Check**
- **Peer Check**
- **Knowledge**
- **Procedures**
- **Job Briefing**
- **Coaching**
- **Turnover**

VERIFIED BY	DATE	TIME

FORM TITLE:	FORM NO.	CHANGE NO.
VERIFICATION COVER SHEET	1000.006A	053

8.0 Transfer to Auxiliary Supply

CAUTION

For Safety Group rod insertion >1.5% (4 second insertion) below its out limit, with the Reactor critical, enter applicable TS 3.1.5 Condition A or B. This is not applicable for physics tests or rod exercise surveillances.

NOTE

- Active fuel is 2 3/8" (~1.7%) below a fully withdrawn control rod.
- TR CF lamp must be off and GROUP lamp on before a transfer reset can be accomplished.
- TR CF lamp on indicates one or more CRD on the AUX bus.
- For information or troubleshooting purposes, the Description section of this procedure contains the expected light indications to be received for given switch/pushbutton manipulations.
- Diamond panel operations are actual or potential reactivity manipulations and require Licensed Operator peer check.

8.1 Verify the following:

- TRANS RESET lamp on
- TR CF lamp off

8.2 Set GROUP SELECT SWITCH to desired Group 1-8.

8.3 Set SINGLE SELECT SWITCH to desired CRDM: 1-12 or ALL.

8.4 Set AUTO-MANUAL switch to MANUAL.

8.5 Set SEQ-SEQ OR switch to SEQ OR.

8.6 Set GROUP-AUXIL switch to AUXIL.

8.7 Set SPEED SELECTOR switch to JOG.

8.7.1 IF SY lamp energizes and de-energizes, THEN set SPEED SELECTOR switch to RUN.

A. Notify CRS/SM.

B. Contact I&C and SYE for assistance.

8.8 Set CLAMP-CLAMP REL switch to CLAMP.

8.9 Press MAN TRANS switch.

8.10 Set CLAMP-CLAMP REL switch to CLAMP REL.

NOTE

- If any portion of a group is transferred to the Aux Supply, only those rods transferred will respond to a command to move. All rods associated with Group 8 will move if commanded, regardless of how many rods are transferred to the Aux Supply.
- With any group transferred to the Aux Supply, control rods may be returned to automatic and that group will function normally.

8.11 Set GROUP-AUXIL switch to GROUP.

8.12 IF movement at RUN speed is desired, THEN set speed switch to RUN.

NOTE

- For information or troubleshooting purposes, the Description section of this procedure contains the expected light indications to be received for given switch/pushbutton manipulations.
- Diamond panel operations are actual or potential reactivity manipulations and require Licensed Operator peer check.

9.0 Transfer from Auxiliary Supply

NOTE

If a CRDM is selected that is NOT already on auxiliary supply, it will be transferred to auxiliary supply. PI Panel CONTROL ON lamp will be on if CRDM is transferred to auxiliary supply.

9.1 Set GROUP SELECT SWITCH to group with CRDM(s) on auxiliary supply.

9.2 Set SINGLE SELECT SWITCH to desired CRDM: 1-12 or ALL.

9.3 Set AUTO-MANUAL switch to MANUAL.

9.4 Set SEQ/SEQ OR switch to SEQ OR.

9.5 Set GROUP/AUXIL switch to AUXIL.

9.6 Set SPEED SELECTOR switch to JOG.

9.6.1 IF SY lamp energizes and de-energizes, THEN set SPEED SELECTOR switch to RUN.

A. Notify CRS/SM.

B. Refer to TS for operability.

C. Contact I&C and SYE for assistance.

9.7 Set CLAMP-CLAMP REL switch to CLAMP.

9.8 Press MAN TRANS switch and release.

9.9 Set CLAMP-CLAMP REL switch to CLAMP REL.

S2. Reactor Coolant system Inventory Control

D/E/L/S

K/A 004 A4.06

A1JPM-RO-MUP01
Isolate Letdown, restore Makeup and Seal Injection

RO only

JOB PERFORMANCE MEASURE

Unit: 1 Rev # 8 Date: _____

JPM ID: A1JPM-RO-MUP01

System/Duty Area: Makeup and Purification

Task: Isolate Letdown, Restore Makeup and Seal Injection

JTA# ANO1-RO-EOP-EMERG-55

KA Value RO 3.6 SRO 3.1 KA Reference: 004 A4.06

Approved For Administration To: RO X SRO X

Task Location: Inside CR X Outside CR _____ Both _____

Suggested Testing Environment and Method (Perform or Simulate):

Plant Site: _____ Simulator: Perform Lab: _____

Position Evaluated: RO: _____ SRO: _____

Actual Testing Environment: Plant Site _____ Simulator _____ Lab _____

Testing Method: Perform _____ Simulate _____

Approximate Completion Time in Minutes: 15 Minutes

Reference(s): 1202.001 Reactor Trip (step 9) and 1202.012 RT-1 Restore normal Makeup and Seal Injection

Examinee's Name: _____ SSN: _____

Evaluator's Name: _____

The Examinee's performance was evaluated against the standards contained in this JPM and is determined to be:

Satisfactory: _____ Unsatisfactory: _____

Performance Checklist Comments:

Start Time _____ Stop Time _____ Total Time _____

*Signed _____ Date _____

*Signature indicates this JPM has been compared to its applicable procedure by a qualified individual (not the examinee) and is current with that revision.

JPM ID: A1JPM-RO-MUP01

THE EXAMINER SHALL REVIEW THE FOLLOWING WITH THE EXAMINEE:

The examiner shall review the "Briefing Checklist - System Walkthrough" portion of OP 1064.023 Attachment 6 with the examinee.

JPM INITIAL TASK CONDITIONS:

The reactor has just tripped.

NOTE: The examinee is to check the operating HPI pump supplying normal Makeup and Seal Injection post reactor trip. The examinee will find that the operating HPI pump is off. The examinee will then have to perform the contingencies of 1202.001 Step 9.

SIMULATOR SETUP: Trip the reactor from any at power IC and then turn off the running (OP HPI) HPI pump.

TASK STANDARD:

Previously running HPI pump running with seal injection and normal makeup re-established per RT-1.

TASK PERFORMANCE AIDS:

Copy of 1202.001 step 9 (Check OP HPI pump supplying normal Makeup and Seal Injection) and 1202.012 RT-1 (Restore normal Makeup and Seal Injection).

JPM ID: A1JPM-RO-MUP01

INITIATING CUE: The CRS/SM directs you to perform step 9 of the Reactor Trip procedure (Check OP HPI pump supplying normal Makeup and Seal Injection).

C	PERFORMANCE CHECKLIST	STANDARD	N/A	SAT	UN SAT
INSTRUCTOR NOTE:					
	1. Check OP HPI pump supplying normal Makeup and Seal Injection. POSITIVE CUE: OP HPI Pump is OFF.	Identified that the Operating HPI pump is OFF.	___	___	___
C	2. Isolate Letdown POSITIVE CUE: CV-1221 green light only ON or CV-1214 and CV1216 green lights only ON.	Isolated letdown by closing CV-1221 (Letdown Coolers Outlet) using handswitch on C16 or by closing CV-1214 and CV-1216 using handswitches on C18 (Letdown Cooler Outlet valves).	___	___	___
C	3. Close RC Pump Seals Total INJ Flow control valve (CV-1207). POSITIVE CUE: CV-1207 indicates closed.	Placed in HAND by depressing the white pushbutton on C04 and closed CV-1207. Observed position indicator reads zero.	___	___	___
C	4. Close Pressurizer Level Control valve (CV-1235). POSITIVE CUE: CV-1235 indicates closed.	Placed in HAND by depressing the white pushbutton on C04 and closed CV-1235. Observed valve demand reads zero.	___	___	___
	5. Verify RCP Seal INJ Block CV-1206 closed. POSITIVE CUE: Green light only ON. NEGATIVE CUE: Red light ON.	On C04, verified CV-1206 closed.	___	___	___
	6. Verify RCS Makeup Block valves CV-1233 and CV-1234 open. POSITIVE CUE: CV-1233 and CV-1234 red lights ON, green lights OFF.	On C16 and C18 verified CV-1233 and CV-1234 open.	___	___	___

C	PERFORMANCE CHECKLIST	STANDARD	N/A	SAT	UN SAT
	7. Verify both HPI RECIRC valves CV-1300 and 1301 open <u>or</u> fully open CV-1235. <u>POSITIVE CUE</u>: CV-1300 and CV-1301 red lights ON, green lights OFF.	On C16 and C18, verified CV-1300 and CV-1301 are open (also acceptable if fully opened CV-1235 instead).	___	___	___
INSTRUCTOR NOTE: Inform Examinee to use the OP HPI Pump for restart.					
	8. Verify P-36B Bus Select MOD Control and P-64B Transfer Switch selected to energized bus (NOTE: this step may be N/A if P-36B is not the OP HPI Pump). <u>POSITIVE CUE</u>: P-36B Bus Select MOD Control and P-64B Transfer Switch selected to energized bus.	Verified P-36B Bus Select MOD Control and P-64B Transfer Switch on C18 selected to energized bus.	___	___	___
C	9. Start AUX Lube Oil Pump for OP HPI pump (P-64A, B or C). <u>POSITIVE CUE</u>: Red light ON. <u>NEGATIVE CUE</u>: Green light ON.	Started AUX Lube Oil Pump for the OP HPI Pump (P64A, B or C) using handswitch on C16 or C18. Observed red light ON above handswitch.	___	___	___
C	10. Start OP HPI Pump (P36A, B or C). <u>POSITIVE CUE:</u> Red light ON. <u>NEGATIVE CUE</u>: Green light ON.	Started OP HPI Pump (P36A, B, or C) using handswitch on C16 or C18. Observed red light ON above handswitch	___	___	___
	11. Stop AUX Lube Oil Pump for the OP HPI Pump just started (P-64A, B or C). <u>POSITIVE CUE:</u> Green light ON.	Stopped AUX Lube Oil Pump for the OP HPI Pump (P-64A, B or C) using handswitch on C16 or C18. Observed green light ON above handswitch.	___	___	___
C	12. Place CV-1206 in OVRD. <u>POSITIVE CUE</u>: OVRD light ON.	Placed CV-1206 in OVRD using the NORMAL/OVRD pushbutton on C04. Observed OVRD light ON.	___	___	___
C	13. Open CV-1206. <u>POSITIVE CUE</u>: Red light ON.	Opened CV-1206 using handswitch located on C04. Observed red light ON above handswitch.	___	___	___

C	PERFORMANCE CHECKLIST	STANDARD	N/A	SAT	UN SAT
NOTE: If this JPM is being simulated, inform Examinee that RCP Seal Bleedoff temps are < 180°F.					
C	14. Open CV-1207 slowly to achieve 30-40 gpm RCP Seal Total INJ Flow. POSITIVE CUE: CV-1207 indicates open, FLOW light ON. NEGATIVE CUE: Flow light OFF. NOTE: FLOW light should come ON above CV-1206 OVRD light when seal injection flow is ~22 gpm.	Slowly opened CV-1207 using manual toggle switch on C04. Established ~30-40 gpm seal injection flow. Observed FLOW light ON.	___	___	___
	15. Place CV-1207 in AUTO. POSITIVE CUE: Red light ON.	Placed CV-1207 in automatic position by depressing the red AUTO pushbutton on C04. Observed red light ON at CV-1207 controller.	___	___	___
	16. WHEN RCP Seals Total INJ Flow is above setpoint of ~22 gpm (CV-1206 FLOW light on), THEN return CV-1206 OVRD pushbutton to normal (OVRD light off). POSITIVE CUE: Injection flow is 23 gpm, CV-1206 FLOW light is on.	Verify RCP seal injection flow is above setpoint ~ 22 gpm and CV-1206 FLOW light is on.	___	___	___
	17. Place CV-1206 OVRD pushbutton to normal (OVRD light off). POSITIVE CUE: CV-1206 OVRD pushbutton is normal i.e. OVRD light is off.	Place CV-1206 OVRD pushbutton to normal.	___	___	___
C	18 Place CV-1235 (Pressurizer Level Control valve) controller in AUTO position. POSITIVE CUE: Red AUTO light ON.	Placed CV-1235 in automatic position by depressing the red AUTO pushbutton on C04. Observed red light ON at valve controller.	___	___	___

END

JPM ID: A1JPM-RO-MUP01

INITIAL CONDITIONS:

The reactor has just tripped.

INITIATING CUE:

The CRS/SM directs you to perform step 9 of the Reactor Trip procedure (Check OP HPI pump supplying normal Makeup and Seal Injection).

ENTERGY OPERATIONS INCORPORATED
ARKANSAS NUCLEAR ONE

TITLE: **REACTOR TRIP**	DOCUMENT NO. **1202.001**	CHANGE NO. **031**
	WORK PLAN EXP. DATE **N/A**	
SET #	SAFETY-RELATED ☒YES ☐NO	IPTE ☐YES ☒NO
	TEMP MOD ☐YES ☒NO	LEVEL OF USE ☒ CONTINUOUS ☐ REFERENCE ☐ INFORMATIONAL
	PROGRAMMATIC EXCLUSION PER EN-LI-100 ☐YES ☒NO	

When you see these *TRAPS*	**Get these *TOOLS***
Time Pressure	**Effective Communication**
Distraction/Interruption	**Questioning Attitude**
Multiple Tasks	**Placekeeping**
Over Confidence	**Self Check**
Vague or Interpretive Guidance	**Peer Check**
First Shift/Last Shift	**Knowledge**
Peer Pressure	**Procedures**
Change/Off Normal	**Job Briefing**
Physical Environment	**Coaching**
Mental Stress (Home or Work)	**Turnover**

VERIFIED BY	DATE	TIME

FORM TITLE:	FORM NO.	CHANGE NO.
VERIFICATION COVER SHEET	1000.006A	054

INSTRUCTIONS

8. (Continued)

CONTINGENCY ACTIONS

CAUTION

The following step will result in load shed of non-vital 4160V buses A1 and A2.

NOTE

SU2 is considered available if all the following conditions are met:

- AUTO X-FMR energized from 500KV
- AUTO X-FMR aligned to SU2
- **No** Unit 2 buses aligned to SU2
- SU2 V REG 3% reduction disabled

b) **IF** SU2 only is available, **THEN** energize bus from SU2 (use SYNC switch).

(1) **IF** non-vital 4160V bus feeder breaker fails to close, **THEN** attempt to reset breaker anti-pump feature by taking handswitch to PULL-TO-LOCK **AND** releasing.

9. Check OP HPI pump supplying normal Makeup and Seal Injection.

9. Perform the following:

A. Isolate Letdown by closing either:

Letdown Coolers Outlet (CV-1221)
OR
Letdown Cooler Outlets (CV-1214 and 1216).

B. Restore normal Makeup and Seal Injection (RT-1).

ENTERGY OPERATIONS INCORPORATED
ARKANSAS NUCLEAR ONE

TITLE: **REPETITIVE TASKS**	DOCUMENT NO. **1202.012**	CHANGE NO. **007**
	WORK PLAN EXP. DATE **N/A**	
SET #	SAFETY-RELATED ☒YES ☐NO	IPTE ☐YES ☒NO
	TEMP MOD ☐YES ☒NO	LEVEL OF USE ☒ CONTINUOUS ☐ REFERENCE ☐ INFORMATIONAL
	PROGRAMMATIC EXCLUSION PER EN-LI-100 ☐YES ☒NO	

When you see these ***TRAPS***	Get these ***TOOLS***
Time Pressure	**Effective Communication**
Distraction/Interruption	**Questioning Attitude**
Multiple Tasks	**Placekeeping**
Overconfidence	**Self Check**
Vague or Interpretive Guidance	**Peer Check**
First Shift/Last Shift	**Knowledge**
Peer Pressure	**Procedures**
Change/Off Normal	**Job Briefing**
Physical Environment	**Coaching**
Mental Stress (Home or Work)	**Turnover**

VERIFIED BY	DATE	TIME

FORM TITLE:	FORM NO.	CHANGE NO.
VERIFICATION COVER SHEET	1000.006A	054

1. **Restore normal Makeup and Seal Injection:**

   A. Place RC Pump Seals Total INJ Flow (CV-1207) in HAND **AND** close.

   B. Place Pressurizer Level Control (CV-1235) in HAND **AND** close.

   C. Verify RCP Seal INJ Block (CV-1206) closed.

   D. Verify RCS Makeup Block valves open (CV-1233 and 1234).

   E. Verify **one** of the following:

   - **Both** HPI RECIRC valves open (CV-1300 and 1301)
   - Fully open CV-1235 to prevent dead-heading pump

   F. **IF** P36B will be used, **THEN** verify the following selected to energized bus:

   - P36B Bus Select MOD Control
   - P64B Transfer Switch

   G. Start AUX Lube Oil pump for OP or STBY HPI pump.

   H. Start OP or STBY HPI pump.

   I. Stop AUX Lube Oil pump.

   J. Place CV-1206 in OVRD **AND** open.

   K. **IF** RCP Seal Bleedoff temps are ≤ 180°F,
   THEN slowly open CV-1207 until RCP Seals Total INJ Flow is 30 to 40 gpm **AND** place in AUTO.

   L. **IF** RCP Seal Bleedoff temps are >180°F,
   THEN slowly open CV-1207 until RCP Seals Total INJ Flow is 8 to 12 gpm.

   1) Record current time _____.

   2) Maintain 8 to 12 gpm total flow ≥ 30 minutes.

   3) After 30 minutes, slowly open CV-1207 until 30 to 40 gpm total flow is reached **AND** place in AUTO.

   M. **WHEN** RCP Seals Total INJ Flow is above setpoint of ~ 22 gpm (CV-1206 FLOW light on), **THEN** return CV-1206 OVRD pushbutton to normal (OVRD light off)

   N. Adjust Pressurizer Level Control Setpoint to 100" **AND** place CV-1235 in AUTO.

END

S3. Reactor Pressure Control

N/A/S

K/A 010 3.02

A1JPM-RO-PZR05
Pressure in manual in response to
RCS pressure Hi Annunciator

RO/SRO

JOB PERFORMANCE MEASURE

Unit: 1 Rev # 0 Date: _____

JPM ID: A1JPM-RO-PZR05

System/Duty Area: PRESSURIZER

Task: Respond to Low RCS Pressure due to stuck open spray valve

JTA# _____

KA Value RO 3.6 SRO 3.5 KA Reference: 010 A3.02

Approved For Administration To: RO X SRO X

Task Location: Inside CR X Outside CR _____ Both _____

Suggested Testing Environment and Method (Perform or Simulate):

Plant Site: _____ Simulator: Perform Lab: _____

Position Evaluated: RO: X SRO: X

Actual Testing Environment: Plant Site _____ Simulator X Lab _____

Testing Method: Perform X Simulate _____

Approximate Completion Time in Minutes: 15 Minutes

Reference(s): 1203.012H Annunciator K09 corrective Action K09-C1; 1203.015 Pressurizer systems Failure

Examinee's Name: _____ SSN: _____

Evaluator's Name: _____

The Examinee's performance was evaluated against the standards contained in this JPM and is determined to be:

Satisfactory: _____ Unsatisfactory: _____

Performance Checklist Comments:

Start Time _____ Stop Time _____ Total Time _____

*Signed _____ Date _____

*Signature indicates this JPM has been compared to its applicable procedure by a qualified individual (not the examinee) and is current with that revision.

JPM ID: A1JPM-RO-PZR05

THE EXAMINER SHALL REVIEW THE FOLLOWING WITH THE EXAMINEE:

The examiner shall review the "Briefing Checklist - System Walkthrough" portion of OP 1064.023 Attachment 6 with the examinee.

JPM INITIAL TASK CONDITIONS:

The Reactor is at 38% power with 3 RCP's running "D" RCP is secured.

SIMULATOR SETUP: Have the Spray valve stuck open CV-1008 and have the spray valve isolation valve CV-1009. Spray valve should be open slightly and have RCS pressure going down slowly with all PZR heaters on. Have RCS pressure Hi/Lo alarm in K09-C1. Simulator should be frozen until candidate is ready.
THIS IS AN ALTERNATE PATH JPM

TASK STANDARD:

Trip Reactor and Stop "C" RCP due to cannot stop RCS pressure decrease. Tripping the reactor must be performed prior to reaching the RPS low pressure set point.

TASK PERFORMANCE AIDS:

Copy of 1203.015 section 6 Pressurizer Spray Valve (CV-1008) and 1203.012H Annunciator K09 corrective action for K09-C1 window RCS Pressure Hi/Lo

JPM ID: A1JPM-RO-PZR05

INITIATING CUE: The CRS/SM directs you to respond Annunciator K09-C1 RCS Pressure HI/LO alarm

Critical Tasks:3, 8, and 13

C	PERFORMANCE CHECKLIST	STANDARD	N/A	SAT	UN SAT
INSTRUCTOR NOTE:					
	1. Confirm alarm by comparing RC pressure indications on C04 POSITIVE CUE: All RCS pressure indicators are going down .	Identified that all RCS pressure indicators are going down	___	___	___
	2. Verify all Pressurizer heaters are on POSITIVE CUE: All pressurizer heaters are on.	Identifies all Pressurizer heaters are on	___	___	___
C	3. Verify Pressurizer Spray (CV 1008) closed. Negative CUE: Pressurizer Spray (CV 1008) open.	Identifies Pressurizer Spray (CV 1008) opened. Attempts to close Pressurizer Spray (CV 1008) and valve will not close	___	___	___
	4. Verify ERV (PSV-1000) closed. POSITIVE CUE: ERV (PSV-1000) closed..	Identifies ERV (PSV-1000) closed	___	___	___
	5. Refers to Pressurizer Systems failure 1203.015 POSITIVE CUE: Hand student Pressurizer Systems failure 1203.015	Refers to Pressurizer Systems failure 1203.015 section 6 Pressurizer Spray valve (CV-1008) Failure.	___	___	___
	6. Close Pressurizer Spray Isolation valve CV-1009 Negative CUE: Pressurizer Spray Isolation valve CV-1009 open.	Attempts to close Pressurizer Spray isolation valve (CV 1009) and valve will not close	___	___	___

C	PERFORMANCE CHECKLIST	STANDARD	N/A	SAT	UN SAT
	7. Verify all Pressurizer heaters are on POSITIVE CUE: All pressurizer heaters are on.	Identifies all Pressurizer heaters are on	___	___	___
C	8. Trip Reactor POSITIVE CUE: Reactor tripped	Student Trips Reactor verifies all rods are inserted and Reactor power is going down	___	___	___
	9. Verifies Turbine is tripped POSITIVE CUE: Turbine is tripped.	Verifies all throttle and governors valves are shut	___	___	___
	10. Verifies Sub Cooling Margin is adequate POSITIVE CUE: SCM is adequate	Verifies SCM is >30 degrees f	___	___	___
	11. Start "C" RCP HP Oil Lift pump (P63C) POSITIVE CUE: RCP HP Oil Lift pump (P63C) starts	Starts "C" RCP HP Oil Lift pump (P63C)	___	___	___
	12. Start "C" RCP Backstop Lube Oil pump (P81C) POSITIVE CUE: RCP Backstop Lube Oil pump (P81C) starts.	Starts "C" RCP Backstop Lube Oil pump (P81C)	___	___	___
C	13. Stop "C" RCP (P-32C) POSITIVE CUE: "C" RCP (P-32C) stops	Stopped "C" RCP (P-32C) prior to RCS pressure drops below 1590 psig	___	___	___
Note to Examiner : Tell student JPM complete					

END

JPM ID: A1JPM-RO-PZR05

INITIAL CONDITIONS:

The Reactor is at 38% power with 3 RCP's running "D" RCP is secured.

INITIATING CUE:

The CRS/SM directs you to respond Annunciator K09-C1 RCS Pressure HI/LO alarm

Location: C14

Device and Setpoint:
RC Pressure Loop A Narrow Range (PS-1023) ≥2255 psig
or <2055 psig
RC Pressure Loop B Narrow Range (PS-1038) ≥2255 psig
Or <2055 psig

RCS
PRESSURE
HI/LO

Alarm: K09-C1

1.0 OPERATOR ACTIONS

NOTE
The following indicators should read nearly alike except during three RCP operation.

1. Confirm alarm by comparing RC pressure indications on C04.

   - RC Pressure Narrow Range Loop A recorder (PR-1023)
   - RC Pressure Narrow Range Loop B recorder (PR-1038)
   - RC Pressure Wide Range Loop B recorder (PI-1041)
   - RC Pressure Wide Range Loop B indicator (PR-1042)

NOTE
A malfunctioning pressure instrument can insert an erroneous trip signal to the RPS.

2. Refer to COLR Figures for RC pressure limits.

3. IF RC pressure is confirmed low,
   THEN perform the following:

   A. Verify all pressurizer heaters on.

   B. Verify Pressurizer Spray (CV-1008) closed.

   C. Verify ERV (PSV-1000) closed.

   D. Refer to Pressurizer Systems Failure (1203.015).

4. IF RC pressure is confirmed high,
   THEN perform the following:

   A. Verify Pressurizer Spray (CV-1008) open.

   B. Verify all pressurizer heaters are off.

   C. Refer to Pressurizer Systems Failure (1203.015).

5. IF transient is caused by ICS malfunction,
   OR ICS instrument failure
   THEN take manual control of affected H/A station AND refer to ICS Abnormal Operation (1203.001).

6. Refer to SASS MISMATCH K07-B4 (1203.012F)

2.0 PROBABLE CAUSES

- Malfunctioning pressure instrument
- ICS malfunction

3.0 REFERENCES

Window Arrangement Annunciator K09 (E-459, sheets 1-4)

ENTERGY OPERATIONS INCORPORATED
ARKANSAS NUCLEAR ONE

TITLE: **PRESSURIZER SYSTEMS FAILURE**	DOCUMENT NO. **1203.015**	CHANGE NO. **014**
	WORK PLAN EXP. DATE **N/A**	TC EXP. DATE **N/A**
SET #	SAFETY-RELATED ☒YES ☐NO	IPTE ☐YES ☒NO
	TEMP ALT ☐YES ☒NO	LEVEL OF USE ☒ CONTINUOUS ☐ REFERENCE ☐ INFORMATIONAL
	PROGRAMMATIC EXCLUSION PER EN-LI-100 ☐YES ☒NO	

When you see these ***TRAPS***	Get these ***TOOLS***
Time Pressure	**Effective Communication**
Distraction/Interruption	**Questioning Attitude**
Multiple Tasks	**Placekeeping**
Over Confidence	**Self Check**
Vague or Interpretive Guidance	**Peer Check**
First Shift/Last Shift	**Knowledge**
Peer Pressure	**Procedures**
Change/Off Normal	**Job Briefing**
Physical Environment	**Coaching**
Mental Stress (Home or Work)	**Turnover**

VERIFIED BY	DATE	TIME

FORM TITLE:	FORM NO.	CHANGE NO.
VERIFICATION COVER SHEET	1000.006A	053

SECTION 6 -- PRESSURIZER SPRAY VALVE (CV-1008) FAILURE

INSTRUCTIONS

1. **IF failed open,**
   THEN place Pressurizer Spray Control switch in HAND AND attempt to close CV-1008 (modulating valve).

> **NOTE**
> CV-1009 torque switch can be overridden in the OPEN or CLOSE direction by holding the hand switch in the respective position.

A. **IF** CV-1008 will NOT close,
THEN close Pressurizer Spray Isolation Valve (CV-1009).

B. Verify Pressurizer heaters return RCS pressure to normal.

> **CAUTION**
> Pressurizer spray shall not be used if the temperature difference between the Pressurizer and the spray fluid is >430°F (TRM 3.4.3). Closing CV-1009 isolates the CV-1008 bypass spray flow.

C. **IF** necessary,
THEN control spray flow by cycling Pressurizer Spray Isolation Valve (CV-1009) open and closed.

D. **IF** both CV-1008 and CV-1009 do NOT close
AND RCS pressure is dropping,
THEN perform the following:

1) Verify all PZR heaters ON.

2) Immediately begin reducing load to 40% at l0%/min per Rapid Plant Shutdown (1203.045).

3) **IF** 4 RCPs are running
AND BOTH of the following conditions are met:

- Load is reduced to ≤675 MWe (≤75% load)
- Reactor power is ≤75%,

THEN perform the following:

a. Start "C" RCP HP Oil Lift Pump (P-63C) and "C" RCP Backstop Lube Oil Pump (P-81C).

b. Stop "C" RCP (P-32C).

c. **WHEN** zero speed is indicated,
THEN stop P-63C and P-81C.

(continued)

SECTION 6 -- PRESSURIZER SPRAY VALVE (CV-1008) FAILURE

NOTE
In Modes 1 and 2, operation with only one RCP in each loop causes entry into TS 3.4.4 Condition A.

4) **IF** 3 RCPs running
AND all of the following conditions are met:
   - Load is reduced to ≤360 MWe (≤40% load)
   - Reactor power is ≤55%,
   - "C" and "D" RCPs in-service

   THEN perform the following:

   a) Start "C" RCP HP Oil Lift Pump (P-63C) and "C" RCP Backstop Lube Oil Pump (P-81C).

   b) Stop "C" RCP (P-32C).

   c) **WHEN** zero speed is indicated,
   THEN stop P-63C and P-81C.

   d) Enter TS 3.4.4 Condition A.

5) **IF** 3 RCPs running,
AND "D" RCP is secured,
THEN perform the following:

   a) Trip Reactor.

   b) Secure P-32C as follows:

      (1) Start "C" RCP HP Oil Lift Pump (P-63C) and "C" RCP Backstop Lube Oil Pump (P-81C).

      (2) Stop "C" RCP (P-32C).

      (3) **WHEN** zero speed is indicated,
      THEN stop P-63C and P-81C.

   c) Perform Reactor Trip (1202.001) while continuing with this procedure.

   d) Enter TS 3.4.5 Condition A.

6) **WHEN** conditions permit a reactor building entry,
THEN attempt to manually close either CV-1008 or CV-1009.

E. Contact Ops Manager.

(continued)

S4. Heat Removal from Reactor Core (Primary)

A/D/L/S

K/A 005 A4.01

A1JPM-RO-DHR03
Establish Decay Heat removal Using P34-A

RO/SRO

JOB PERFORMANCE MEASURE

Unit: 1 Rev # 3 Date: _____

JPM ID: A1JPM-RO-DHR03

System/Duty Area: Decay Heat Removal

Task: Establish Decay Heat Removal Using P-34A

JTA# ANO1-RO-DHR-NORM-2

KA Value RO 3.6 SRO 3.4 KA Reference 005 A4.01

Approved For Administration To: RO X SRO X

Task Location: Inside CR: X Outside CR: _____ Both: _____

Suggested Testing Environment And Method (Perform or Simulate):

Plant Site: _____ Simulator: Perform Lab: _____

Position Evaluated: RO: _____ SRO: _____

Actual Testing Environment: Simulator : _____ Plant Site: _____ Lab: _____

Testing Method: Simulate: _____ Perform: _____

Approximate Completion Time In Minutes: 15 Minutes

Reference(s): 1104.004 Chg 077 and 1102.010

Examinee's Name: _____ SSN: _____

Evaluator's Name: _____

The Examinee's performance was evaluated against the standards contained in this JPM and is determined to be:

Satisfactory: _____ Unsatisfactory: _____

Performance Checklist Comments:

Start Time _____ Stop Time _____ Total Time _____

*Signed : _____ Date: _____

*Signature indicates this JPM has been compared to its applicable procedure by a qualified individual (not the examinee) and is current with that revision.

JPM ID: A1JPM-RO-DHR03

THE EXAMINER SHALL REVIEW THE FOLLOWING WITH THE EXAMINEE:

The examiner shall review the "Briefing Checklist - System Walkthrough" portion of OP 1064.023 Attachment 6 with the examinee.

JPM INITIAL TASK CONDITIONS:

A plant shutdown and cooldown is in progress. Plant Shutdown and Cooldown procedure 1102.010 is complete to Step 10.8. "C" and "D" RCP's are in service. RCS temperature is 260 °F and RCS pressure is 240 psig. The Decay Heat Removal System is filled and vented. Breakers B-5255/ B-6255/ B-5651 (for CV-1050, CV-1410 and CV-1404 DH Suction valves) are closed. RP has been notified.

TASK STANDARD:

P-34A decay heat pump started and then secured due to SW cooling supply valve CV-3840 failure to open.

This is a FAULTED JPM.

TASK PERFORMANCE AIDS:

1104.004 DHR Operating Procedure

SIMULATOR SETUP:

Comply with initial task conditions above and also:

Select HOT SHUTDOWN as the mode on PMS.

Use Control Valve Malfunctions CV3840 SW P34A BRG CLR E50A and set severity value to 0 to prevent CV-3840 from opening before the decay heat pump is started.

When the decay heat pump is started then use Meter Overrides C13 AO_TR6500P DH P34A PP BRG 2, PT16 and fail to Analog Value 200 ramped over 60 seconds. Use Annunciator Cry Wolf K09E8 DH PMP/MTR BRG TEMP HI to ON within 1 minute.

JPM ID: A1JPM-RO-DHR03

INITIATING CUE: The SM/CRS directs that DHR Pump P34A be placed in service with DHR flow at ~2800 gpm per 1104.004 secton 7.2.

C	PERFORMANCE CHECKLIST	STANDARD	N/A	SAT	UN SAT
	1. Establish a Plant Computer Programmable Annunciator alarm for P-34A discharge pressure of 400 psig (P1404). POSITIVE CUE: Plant computer programmable annunciator alarm is established.	Selected K02-E8 and K02-F8 from the alarm menu and verified P1404 assigned to either K02-E8 or K02-F8 or assigned P1404 to either K02-E8 or K02-F8. Selected Data Base Manager from the Maintenance menu or by typing DBM. Input P1404 and verified the HOT SHUTDOWN alarm set to 400 psig or set alarm to 400 psig.	____	____	____
	a. Verify that PMS current plant mode and refueling mode assignment are consistent for this setting. POSITIVE CUE: PMS Plant Mode Assignment is set to HOT SHUTDOWN Mode.	Verified that PMS current Plant Mode Assignment is selected to the proper Mode (HOT SHUTDOWN) using Plant Mode Assignment from the Utilities Menu or by observing Mode at the bottom of any PMS screen.	____	____	____
C	2. Close Decay Heat P-34A Suction from BWST (CV-1436). POSITIVE CUE: CV-1436 red light off, green light on.	Moved the control switch for CV-1436 to the closed position.	____	____	____
C	3. Open Decay Heat P-34A Suction from RCS (CV-1434). POSITIVE CUE: CV-1434 red light on, green light off.	Moved the control switch for CV-1434 to the open position.	____	____	____
	4. Open the following valves. • E-35A Sample Valve (SS-41A) • E-35B Sample Valve (SS-41B) POSITIVE CUE: Waste Control Operator reports that SS-41A and SS-41B are open	Dispatched the Waste Control Operator to open sample valves SS-41A and SS-41B.	____	____	____
INSTRUCTOR NOTE: Inform examinee that B-6255 is closed and the required Category E/Locked Component entry has been made.					
	5. Verify white Open Permit light ON at CV-1410 handswitch on C16. POSITIVE CUE: White open permit light is on.	Verified white open permit light at CV-1410 on.	____	____	____
C	6. Open DH Suction Valve CV-1410. POSITIVE CUE: CV-1410 red light on, green light off.	Moved the control switch for DH suction valve CV-1410 to the open position.	____	____	____

C	PERFORMANCE CHECKLIST	STANDARD	N/A	SAT	UN SAT
INSTRUCTOR NOTE: Inform examinee that B-5255 is closed.					
	7. Verify white Open Permit light ON at CV-1050 handswitch on C18. POSITIVE CUE: B-5255 is closed and open permit light is on.	Verified white open permit light at CV-1050 on.	___	___	___
C	8. Open DH Suction Valve CV-1050 POSITIVE CUE: CV-1050 red light on, green light off.	Moved control switch for DH suction valve CV-1050 to the open position.	___	___	___
INSTRUCTOR NOTE: Inform examinee that B-5651 is closed and the required Category E/Locked Component entry has been made.					
C	9. Open DH Suction RB Isolation CV-1404. POSITIVE CUE: CV-1404 red light on, green light off.	Moved control switch for DH suction RB Isolation valve CV-1404 to the open position.	___	___	___
	10. Close decay heat cooler E-35A outlet valve CV-1428. POSITIVE CUE: CV-1428 closed.	Moved control switch for decay heat cooler E-35A outlet CV-1428 to the close position.	___	___	___
C	11. Position E-35A Cooler Bypass (CV-1433) to ~ 75% as indicated on HIC-1433. POSITIVE CUE: CV-1433 ~ 75% open.	Used HIC-1433 and set CV-1433 demand to ~ 75% open.	___	___	___
C	12. Open LPI/Decay Heat Block CV-1401 POSITIVE CUE: CV-1401 red light on, green light off.	Moved control switch for LPI/Decay Heat Block CV-1401 to the open position.	___	___	___
NOTE TO IA OPERATOR: Use Valve Malfunctions CV3840 SW P34A BRG CLR E50A and set severity value to 0 to prevent CV-3840 from opening. When pump is started then use Meter Overrides C13 AO_TR6500P DH P34A PP BRG 2, PT16 and fail to Analog Value 200 ramped over 60 seconds. Use Annunciator Cry Wolf K09E8 DH PMP/MTR BRG TEMP HI to ON within 1 minute.					
C	13. Start P-34A. POSITIVE CUE: P34A started, red light ON. NEGATIVE CUE: P34A did not start, green light ON and no flow indicated.	Placed the breaker control switch for Decay Heat Removal Pump P-34A in the start/on position.	___	___	___

C	PERFORMANCE CHECKLIST	STANDARD	N/A	SAT	UN SAT
	14. Verify LPI/Decay Heat Pump Brg CLR E-50A Inlet (CV-3840) and Decay HT CLR Service Water E-35A Inlet (CV-3822) open. POSITIVE CUE: CV-3822 red light is on, green light off. NEGATIVE CUE: CV-3840 green light ON, red light OFF.	On C-18, verified CV-3840 and CV-3822 red open indication ON and green closed indication OFF. Identified that CV-3840 did NOT open.	___	___	___
	15. Attempt to open CV-3840 locally. POSITIVE CUE: WCO has been dispatched to manually open CV-3840.	Directed Waste Control Operator to open CV-3840 locally.	___	___	___
	16. Monitor P-34A bearing temperatures. Faulted Cue: P-34A bearing temperature is 175°F and rising.	Monitored P-34A temperature at recorder TR6500 on C13 or on the plant computer.	___	___	___
C	17. Stop P-34A. POSITIVE CUE: Green light ON, red light OFF for P-34A. NEGATIVE CUE: P-34A bearing temperatures at 199°F and rising.	Placed breaker control switch for Decay Heat Removal Pump P-34A in the open position.	___	___	___

END

JPM ID: A1JPM-RO-DHR03

INITIAL CONDITIONS:

A plant shutdown and cooldown is in progress. Plant Shutdown and Cooldown procedure 1102.010 is complete to Step 10.8. "C" and "D" RCP's are in service. RCS temperature is 260 °F and RCS pressure is 240 psig. The Decay Heat Removal System is filled and vented. Breakers B-5255/ B-6255/ B-5651 (for CV-1050, CV-1410 and CV-1404 DH Suction valves) are closed. RP has been notified.

INITIATING CUE:

The SM/CRS directs that DHR Pump P34A be placed in service with DHR flow at ~2800 gpm per 1104.004 section 7.2.

ENTERGY OPERATIONS INCORPORATED
ARKANSAS NUCLEAR ONE

TITLE: **DECAY HEAT REMOVAL OPERATING PROCEDURE**	DOCUMENT NO. **1104.004**	CHANGE NO. **077**
	WORK PLAN EXP. DATE **N/A**	TC EXP. DATE **N/A**
SET #	SAFETY-RELATED ☒YES ☐NO	IPTE ☐YES ☒NO
	TEMP ALT ☒YES ☐NO	LEVEL OF USE ☒ CONTINUOUS ☐ REFERENCE ☐ INFORMATIONAL
	PROGRAMMATIC EXCLUSION PER EN-LI-100 ☐YES ☒NO	

When you see these *TRAPS*	**Get these *TOOLS***
Time Pressure	**Effective Communication**
Distraction/Interruption	**Questioning Attitude**
Multiple Tasks	**Placekeeping**
Over Confidence	**Self Check**
Vague or Interpretive Guidance	**Peer Check**
First Shift/Last Shift	**Knowledge**
Peer Pressure	**Procedures**
Change/Off Normal	**Job Briefing**
Physical Environment	**Coaching**
Mental Stress (Home or Work)	**Turnover**

VERIFIED BY	DATE	TIME

FORM TITLE: **VERIFICATION COVER SHEET**	FORM NO. **1000.006A**	CHANGE NO. **053**

7.1.5 RCS pressure less than Decay Heat System Maximum Pressure limit of Plant Shutdown and Cooldown (1102.010), Attachment A.

7.1.6 RCS temperatures <280°F.

7.1.7 RP notified of changing radiological conditions in Auxiliary Building.

{4.3.2, 4.3.4, 4.3.5}

CAUTION

- **Following any significant core damage, the effects on access to vital areas due to high radiation levels should be considered prior to placing the Decay Heat system into service.**
- **If RCS is drained down and both DH pumps are running, extra caution shall be exercised to prevent vortex formation at the pump suction.**
- The Decay Heat System shall be isolated from the RCS when RC temperature is >280°F.
- Decay Heat pump discharge relief setpoint is 445 ±13.35 psig. Discharge pressure should be maintained <400 psig to prevent challenging the relief.

NOTE

- Normally one pump is aligned for Decay Heat Removal and one for LPI. If heat loads are high, both Decay Heat trains may be utilized for Decay Heat Removal.
- If known leakage exists on a single loop (i.e., Decay Heat pump seal leakage), preference is to be given to the other loop for long-term operation after Pressurizer cooldown is complete. The last completed Decay Heat Removal System Integrity Test and Leak Rate Determination (1305.011 Supplement 1 and 2) can aid in determining preferred loop for service.
- SPDS Diagnostic display for LPI may be helpful in monitoring LPI (Decay Heat) pump performance.

7.2 Decay Heat Removal With Low Pressure Injection (Decay Heat) Pump (P-34A)

7.2.1 IF Decay Heat system has been drained for any reason, THEN applicable piping and components should be filled and vented per "Decay Heat System Fill & Vent" section of this procedure.

7.2.2 Establish a Plant Computer Programmable Annunciator alarm for P-34A discharge pressure of 400 psig (P1404).

A. Verify that PMS current plant mode and refueling mode assignment are consistent for this setting.

CAUTION

- With RC pressure >75 psig and DH suction piping aligned to the RCS, exceeding design pressure of suction piping from BWST will occur if Decay Heat P-34A Suction from BWST (CV-1436) and Decay Heat P-34A Suction from RCS (CV-1434) are open at the same time.
- The interlock to prevent the suction from RCS valves (CV-1434 and CV-1435) opening unless suction from BWST valves (CV-1436 and CV-1437) are closed does not prevent CV-1436 and CV-1437 from opening after CV-1434 and CV-1435 are open.

7.2.3 Close Decay Heat P-34A Suction from BWST (CV-1436).

7.2.4 Open Decay Heat P-34A Suction from RCS (CV-1434).

7.2.5 Open the following valves.

- E-35A Sample Valve (SS-41A)
- E-35B Sample Valve (SS-41B)

7.2.6 IF Decay Heat Suction Valve (CV-1410) is closed, THEN perform the following to open CV-1410:

A. Unlock and close B-6255, CV-1410 power supply breaker.

B. Make appropriate entry on Category E/Locked Component Log (E-DOC 1015.001H).

C. Verify white Open Permit light ON at CV-1410 handswitch on C16.

D. Open CV-1410.

7.2.7 IF Decay Heat Suction Valve (CV-1050) is closed, THEN perform the following to open CV-1050:

A. Verify CV-1050 power supply breaker B-5255 closed.

B. Verify white Open Permit light ON at CV-1050 handswitch on C18.

C. Open CV-1050.

7.2.8 IF DH Suction RB Isolation Valve (CV-1404) is closed, THEN perform the following to open CV-1404:

A. Unlock and close B-5651 (CV-1404 power supply breaker).

B. Make appropriate entry on Category E/Locked Component Log (E-DOC 1015.001H).

C. Open CV-1404.

7.2.9 Close DHR Cooler E-35A Outlet (CV-1428) (modulating valve).

7.2.10 Position E-35A Cooler Bypass (CV-1433) to ~ 75% open.

7.2.11 Open LPI/Decay Heat Block (CV-1401) (modulating valve).

WARNING

At RC pressure >220 psig with DH flow throttled, the DH pump discharge relief can lift during pump start. Consideration should be given to clearing personnel from the "A" DH Vault prior to starting P-34A.

CAUTION

DH pump will be damaged if either Decay Heat Suction valve CV-1050 or CV-1410 closes while pump is operating.

NOTE

- CV-1050 will close automatically if Core Flood Tank T-2A Outlet (CV-2415) comes off its closed seat or if RC pressure exceeds 320 psig.
- CV-1410 will close automatically if Core Flood Tank T-2B Outlet (CV-2419) comes off its closed seat or if RC pressure exceeds 385 psig.
- The auto close interlock is automatically reset when RCS pressure is <290 psig.

7.2.12 Start P-34A.

7.2.13 WHEN P-34A is started,
THEN verify the following valves open:

- LPI/Decay Heat Pump Brg Clr E-50A Inlet (CV-3840)
  - IF CV-3840 fails to open,
    THEN attempt to open locally
  - IF pump bearing temperatures exceed 170°F,
    THEN stop P-34A.
- DHR Clr Service Water E-35A Inlet (CV-3822)

7.2.14 After P-34A start, monitor Pressurizer level for indication of discharge relief (PSV-1407) lifting.

A. IF Pressurizer level starts dropping,
THEN stop P-34A.

1. Check DH pump discharge relief reseats.
2. Throttle CV-1433 further open prior to attempting restart of P-34A.

7.2.15 Adjust CV-1433 to establish DH Removal flow within the following limits:

- ≤ 3500 gpm from P-34A
- P-34A discharge pressure <400 psig
- WHEN Rx core decay heat load allows,
  AND if RCS pressure is atmospheric or RCS has N_2 overpressure,
  THEN maintain total DH flow ≤ 2000 gpm.

7.2.16 IF required by Surveillance Test Schedule,
THEN perform Part 2 of Supplement 3 of this procedure before proceeding.

NOTE

If LPI (Decay Heat) Room Cooler (VUC-1A) breaker is open, VUC-1B will not auto start. When VUC-1A breaker is open, VUC-1B must be run continuously in manual to ensure P-34A operability.

7.2.17 WHEN P-34A is started,
THEN verify LPI (Decay Heat) Room Cooler (VUC-1A) starts.

A. IF VUC-1A does not start,
THEN verify LPI (Decay Heat) Room Cooler (VUC-1B) starts.

7.2.18 Adjust the following DECAY HEAT VORTEX WARNING setpoints, using SPDS computer POINT MAINTENANCE/UPDATE ALARMING DISPLAY function to values just below and above the current value of Decay Heat Pump motor current (I1A305).

- "A" SPDS KP34ALO
- "A" SPDS KP34AHI
- "B" SPDS KP34ALO
- "B" SPDS KP34AHI

7.2.19 Establish restrictions around protected areas and tag interconnecting system valves per Attachment J of Decay Heat Removal and LTOP System Control (1015.002).

NOTE

Lower limit for RCS and SFP temperature is 73°F.

7.2.20 Continue cooldown per "Establishing Cooldown Rate Using Decay Heat Removal System" section of this procedure when directed by 1102.010.

7.2.21 IF it is desired to operate both Decay Heat systems on the RCS,
THEN place P-34B inservice per applicable steps of "Shifting Operating Decay Heat Loops" of this procedure.

S5. Containment Integrity

D/EN/P/S

K/A 028 A4.01

A1JPM-RO-HYD01
Place Hydrogen Recombiner M-55A
in operation

RO only

JOB PERFORMANCE MEASURE

UNIT: 1 REV # 4 DATE: _____

TUOI NUMBER: ANO-1-JPM-RO-HYD01

SYSTEM/DUTY AREA: HYDROGEN RECOMBINER AND PURGE CONTROL SYSTEM

TASK: PLACE HYDROGEN RECOMBINER M55A IN OPERATION

JTA#: 10285120101

KA VALUE RO: 4.0 SRO: 4.0 KA REFERENCE: 028 A4.01

APPROVED FOR ADMINISTRATION TO: RO: X SRO: X

TASK LOCATION: INSIDE CR: X OUTSIDE CR: _____ BOTH: _____

SUGGESTED TESTING ENVIRONMENT AND METHOD (PERFORM OR SIMULATE):

PLANT SITE: _____ SIMULATOR: PERFORM LAB: _____

POSITION EVALUATED: RO: _____ SRO: _____

ACTUAL TESTING ENVIRONMENT: SIMULATOR: _____ PLANT SITE: _____ LAB: _____

TESTING METHOD: SIMULATE: _____ PERFORM: _____

APPROXIMATE COMPLETION TIME IN MINUTES: 15 MINUTES

REFERENCE(S): 1104.031 change 019

EXAMINEE'S NAME: _____ SSN _____-_____-_____

EVALUATOR'S NAME: _____

THE EXAMINEE'S PERFORMANCE WAS EVALUATED AGAINST THE STANDARDS CONTAINED IN THIS JPM AND IS DETERMINED TO BE:

SATISFACTORY: _____ UNSATISFACTORY: _____

PERFORMANCE CHECKLIST COMMENTS:

_____ Start Time _____ Stop Time _____ Total Time

SIGNED _____ DATE: _____

SIGNATURE INDICATES THIS JPM HAS BEEN COMPARED TO ITS APPLICABLE PROCEDURE BY A QUALIFIED INDIVIDUAL (NOT THE EXAMINEE) AND IS CURRENT WITH THAT REVISION.

TUOI NUMBER: ANO-1-JPM-RO-HYD01

THE EXAMINER SHALL REVIEW THE FOLLOWING WITH THE EXAMINEE:

The examiner shall review the "Briefing Checklist - System Walkthrough" portion of OP 1064.023 Attachment 6 with the examinee.

JPM INITIAL TASK CONDITIONS: A LOCA has occurred. Containment hydrogen concentration is 2.0%. Both hydrogen recombiners are shutdown. Containment pressure is 20.4 psia. Pre-LOCA containment temperature was 120°F.

TASK STANDARD: Hydrogen recombiner M55A in operation at power setting of 57 KW to 59 KW on JI-1000.

TASK PERFORMANCE AIDS: 1104.031 sections 8.1 , 8.2, and Attachment B

TUOI NUMBER: ANO-1-JPM-RO-HYD01

INITIATING CUE:

The SS/CRS directs that you place both hydrogen recombiners (M55A/B) in standby and then place M55A in operation at the power required for containment pressure at 20.4 psia and pre-loca containment temperature at 120°F.

CRITICAL ELEMENTS (C): 2, 7,12,13

(C)	PERFORMANCE CHECKLIST	STANDARD	N/A	SAT	UNSAT
	1. Verify power adjust potentiometer for M-55A is set at zero. POSITIVE CUE: Power adjust potentiometer for M55A is set at zero on C26.	Verified power adjust potentiometer set to zero on C26 (if not already at zero used knurled knob on power adjust potentiometers on C26 and turned to the left and set at zero using HS-7472).	___	___	___
(C)	2. Turn hydrogen recombiner M55A on. POSITIVE CUE: M55A red light ON. NEGATIVE CUE: M55A green light ON.	Turned on hydrogen recombiner M55A using HS-7470 on C26.	___	___	___
	3. Select thermocouple #1, 2 or 3 to input to recombiner temperature indicator TI-2300. POSITIVE CUE: thermocouple #1, 2 or 3 selected as desired to input to TI-2300.	Thermocouple #1, 2 or 3 selected to input to TI-2300 using handswitch HS-7474 on C26.	___	___	___
	4. Increase power to ~5 KW and then hold for ten minutes. POSITIVE CUE: Power on JI-1000 indicates 5KW. NOTE: evaluator inform examinee that ten minutes have elapsed after one minute at 5 KW.	Slowly adjusted potentiometer clockwise until power on JI-1000 on C26 indicated ~5 KW.	___	___	___

TUOI NUMBER: ANO-1-JPM-RO-HYD01

(C)	PERFORMANCE CHECKLIST	STANDARD	N/A	SAT	UNSAT
	5. Slowly increase power to 10 KW. POSITIVE CUE: Power is at 10 KW on JI-1000.	Increased power to ~10 KW using power adjust potentiometer on C26.	___	___	___
	6. Verify power adjust potentiometer for M-55B is set at zero. POSITIVE CUE: Power adjust potentiometer for M55B is set at zero on C26.	Verified power adjust potentiometer set to zero on C26 (if not already at zero used knurled knob on power adjust potentiometer on C26 and turned to the left and set at zero using HS-7473).	___	___	___
(C)	7. Turn hydrogen recombiner M55B on. POSITIVE CUE: M55B red lights ON. NEGATIVE CUE: M55B green lights ON.	Turned on hydrogen recombiner M55B using HS-7471 on C26.	___	___	___
	8. Select thermocouple #1, 2 or 3 to input to recombiner temperature indicator TI-2301. POSITIVE CUE: thermocouple #1, 2 or 3 selected as desired to input to TI-2301.	Thermocouple #1, 2 or 3 selected to input to TI-2301 using handswitch HS-7475 on C26.	___	___	___
	9. Increase power to ~5 KW and then hold for ten minutes. POSITIVE CUE: Power on JI-1001 indicates 5KW. NOTE: evaluator inform examinee that ten minutes have elapsed after one minute at 5 KW.	Slowly adjusted potentiometer clockwise until power on JI-1001 on C26 indicated ~5 KW.	___	___	___
NOTE: Evaluator inform examinee to disregard taking data every 30 minutes on Attachment D.					
	10. Verfiy M55A has been at 10 KW for at least 10 minutes. POSITIVE CUE: Ten minutes have elapsed.	Verfiy M55A is at ~10 KW for at least 10 minutes by comparing current time to time recorded in step 8.1.1 E 1.	___	___	___
	11. Slowly increase power to 20 KW on M55A and hold for 5 minutes. POSITIVE CUE: Power at 20 KW on JI-1000. NOTE: inform examinee that five minutes have elapsed after 1 minute at	Increased power on M55A to ~20 KW using power adjust potentiometer on C26.	___	___	___

	20 KW.				
(C)	12. Determine power required from Attachment B based on containment pressure.	Determined recombiner power using Attachment B to be between 57 and 59 KW.	____	____	____
(C)	13. Slowly increase power to 57-59 KW range. POSITIVE CUE: Hydrogen concentration decreasing on QI-7457 and M55A maintaining power at determined value. NEGATIVE CUE: Hydrogen concentration increasing on QI-7457.	Power increased to 57 to 59 range using power adjust potentiometer on C26.	____	____	____

END

JPM ID: ANO-1-JPM-RO-HYD01

INITIAL CONDITIONS:

A LOCA has occurred.
Containment hydrogen concentration is 2.0%.
Both hydrogen recombiners are shutdown.
Containment pressure is 20.4 psia.
Pre-LOCA containment temperature was 120°F.

INITIATING CUE:

The SS/CRS directs that you place both hydrogen recombiners (M55A/B) in standby and then place M55A in operation per 1104.031, "Containment Hydrogen Control" steps 8.1 through 8.2 E.

ENTERGY OPERATIONS INCORPORATED
ARKANSAS NUCLEAR ONE

TITLE: **CONTAINMENT HYDROGEN CONTROL**	DOCUMENT NO. **1104.031**	CHANGE NO. **019**
	WORK PLAN EXP. DATE **N/A**	TC EXP. DATE **N/A**
SET #	SAFETY-RELATED ☒YES ☐NO	IPTE ☐YES ☒NO
	TEMP ALT ☐YES ☒NO	LEVEL OF USE ☒ CONTINUOUS ☐ REFERENCE ☐ INFORMATIONAL
	PROGRAMMATIC EXCLUSION PER EN-LI-100 ☐YES ☒NO	

When you see these ***TRAPS***	Get these ***TOOLS***
Time Pressure	**Effective Communication**
Distraction/Interruption	**Questioning Attitude**
Multiple Tasks	**Placekeeping**
Over Confidence	**Self Check**
Vague or Interpretive Guidance	**Peer Check**
First Shift/Last Shift	**Knowledge**
Peer Pressure	**Procedures**
Change/Off Normal	**Job Briefing**
Physical Environment	**Coaching**
Mental Stress (Home or Work)	**Turnover**

VERIFIED BY	DATE	TIME

FORM TITLE:	FORM NO.	CHANGE NO.
VERIFICATION COVER SHEET	1000.006A	053

CAUTION

Hydrogen recombiner, M55A or M55B, should be placed in operation following a LOCA as soon as time permits and must be in operation before hydrogen concentration reaches 3.0% as indicated on the highest reading H_2 analyzer.

8.0 Placing Hydrogen Recombiner (M55A or M55B) in Operation

NOTE

- Both M55A and M55B are placed in standby, then either may be placed in operation.
- The term "slowly" used in this section means raising potentiometer settings slowly enough to witness KW rise without overshooting the target setting.

8.1 Place both M55A and M55B in standby as follows.

8.1.1 Place M55A in standby by performing the following:

A. Verify Power Adjust Potentiometer is set at zero for M55A.

B. Start M55A by placing HS-7470 in ON.

C. Select thermocouple #1, 2, or 3 (HS-7474) to input to M55A Temperature (TI-2300).

D. Slowly turn power adjust potentiometers clockwise to raise power to 5 KW as indicated on M55A Power (JI-1000).

E. Slowly raise power to 10 KW.

1. Record initial time at 10 KW: _____

2. Maintain 10 KW output for standby service.

8.1.2 Place M55B in standby by performing the following:

A. Verify Power Adjust Potentiometer is set at zero for M55B.

B. Start M55B by placing HS-7471 in ON.

C. Select thermocouple #1, 2, or 3 (HS-7475) to input to M55B Temperature (TI-2301).

D. Slowly turn power adjust potentiometers clockwise to raise power to 5 KW as indicated on M55B Power (JI-1001).

E. Slowly raise power to 10 KW.

1. Record initial time at 10 KW: _____

2. Maintain 10 KW output for standby service.

CAUTION

Hydrogen Recombiner, M55A or M55B, should be placed in operation following a LOCA as soon as time permits and must be in operation before hydrogen concentration reaches 3.0% as indicated on the highest reading H_2 analyzer.

8.2 Place recombiners in operation as follows:

8.2.1 Place M55A in-service by performing the following:

A. During heatup, monitor and record all three thermocouple temperatures every 30 minutes on Attachment D.

B. Verify M55A has been at 10 KW for at least 10 minutes.

C. Slowly raise power to 20 KW AND hold for 5 minutes.

D. Determine power required from Recombiner Power (M-55A) Versus Containment Pressure (Attachment B of this procedure) based on containment pressure.

1) KW setting _____

CAUTION

Recombiner power >75 KW and temperature >1450°F may cause heater failure.

2) Slowly raise power to the value determined above.

E. Verify proper recombiner operation by observing the following:

NOTE

- Hydrogen concentration reduction is the long-term, primary method of verification.
- H_2 concentration reduction shall be used regardless of recombiner power or temperature indication as the verification of proper recombiner operation.

- Hydrogen concentration stable or dropping at % Hydrogen (QI-7457 and QI-7459).
- Recombiner maintaining power at value determined

NOTE

- Thermocouples are non-Q and will not be reliable indicators in a post-LOCA environment.
- Recombiner temperature can aid in trending recombiner operation. The following steps are provided as guidelines.
- Recombiner temperature may be plotted on Attachment C for verifying thermocouple operation and estimating time when recombination temperature will be reached.

F. Establish validity of temperature indication by comparing ΔT between thermocouples.

1. IF all three thermocouples fall within a 60°F band,
   THEN average the three temperatures.

2. IF no two thermocouples are within 60°F of each other,
   THEN thermocouples should be considered inaccurate.

3. IF difference of the three temperatures >60°F,
   AND two temperatures are within 60°F,
   THEN average the closest two.

G. Monitor for indication that recombiner operating temperature of 1225°F has been reached.

ATTACHMENT B

RECOMBINER POWER (M-55A)
VERSUS
CONTAINMENT PRESSURE

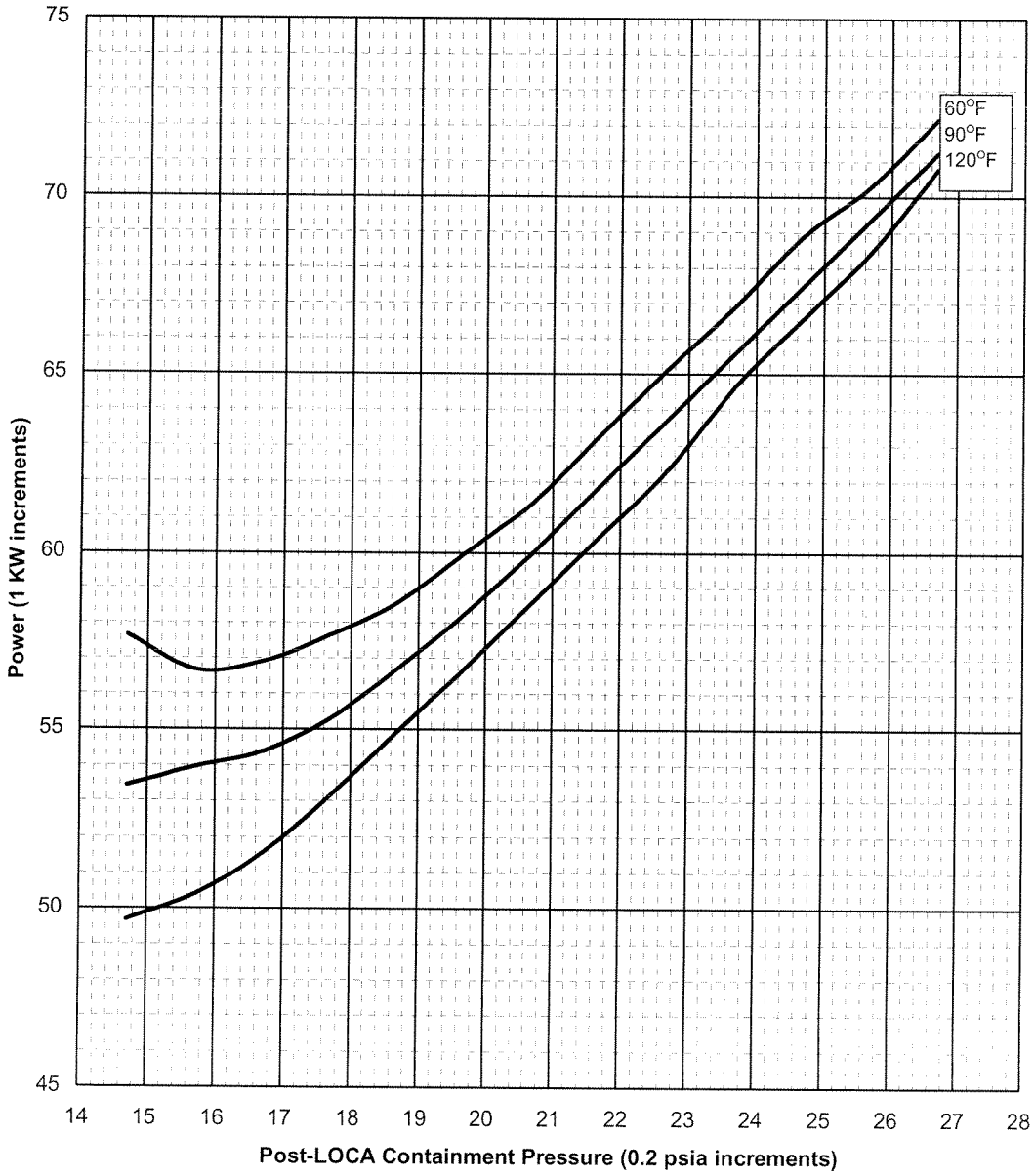

Note: Use pre- LOCA average Reactor Building Temperature from SPDS (TAVRB1) from history file if available. Otherwise use logs.

ATTACHMENT B

RECOMBINER POWER (M-55B)
VERSUS
CONTAINMENT PRESSURE

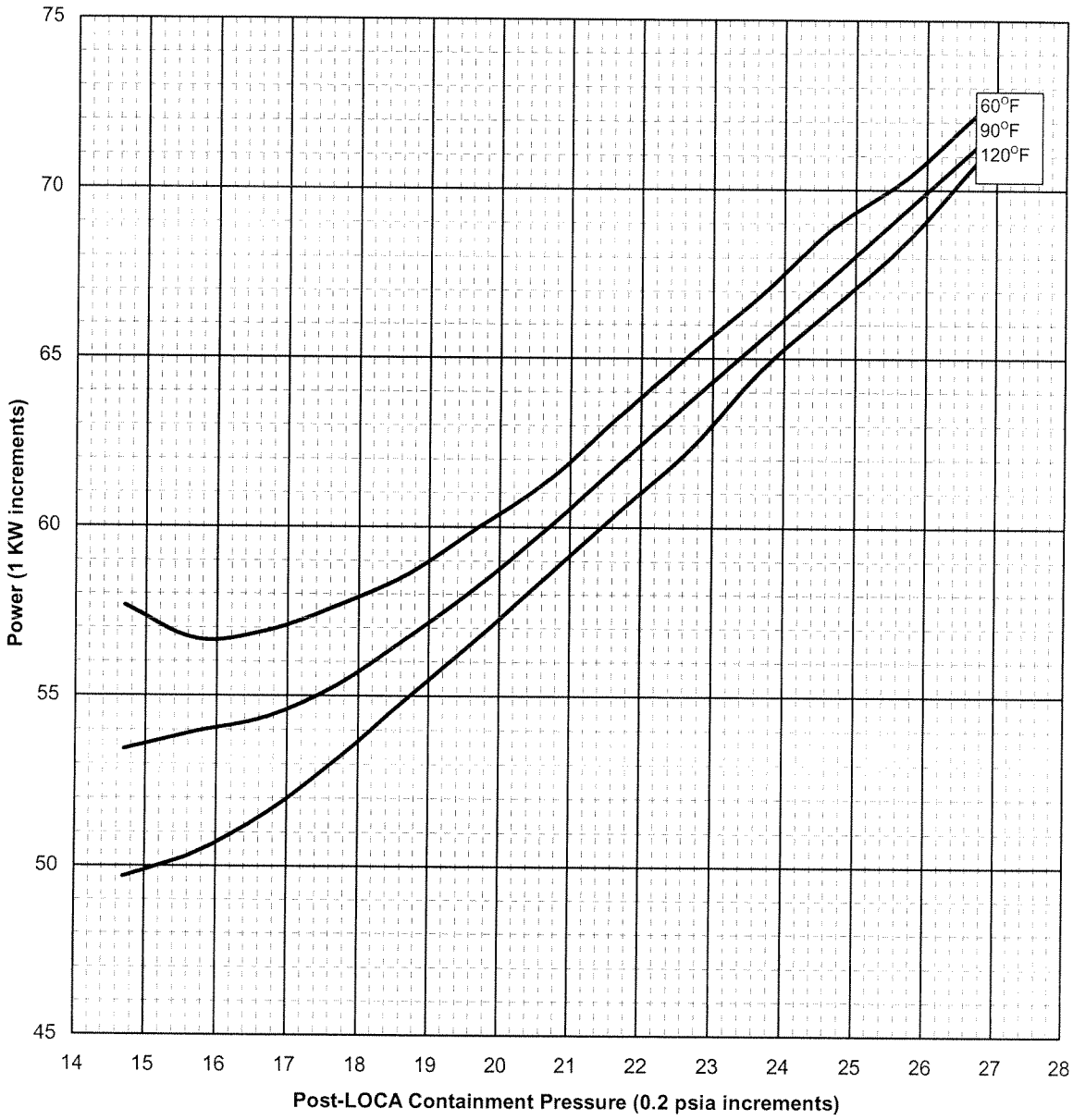

Note: Use pre- LOCA average Reactor Building Temperature from SPDS (TAVRB1) from history file if available. Otherwise use logs.

ATTACHMENT C
TYPICAL RECOMBINER HEATUP RATE

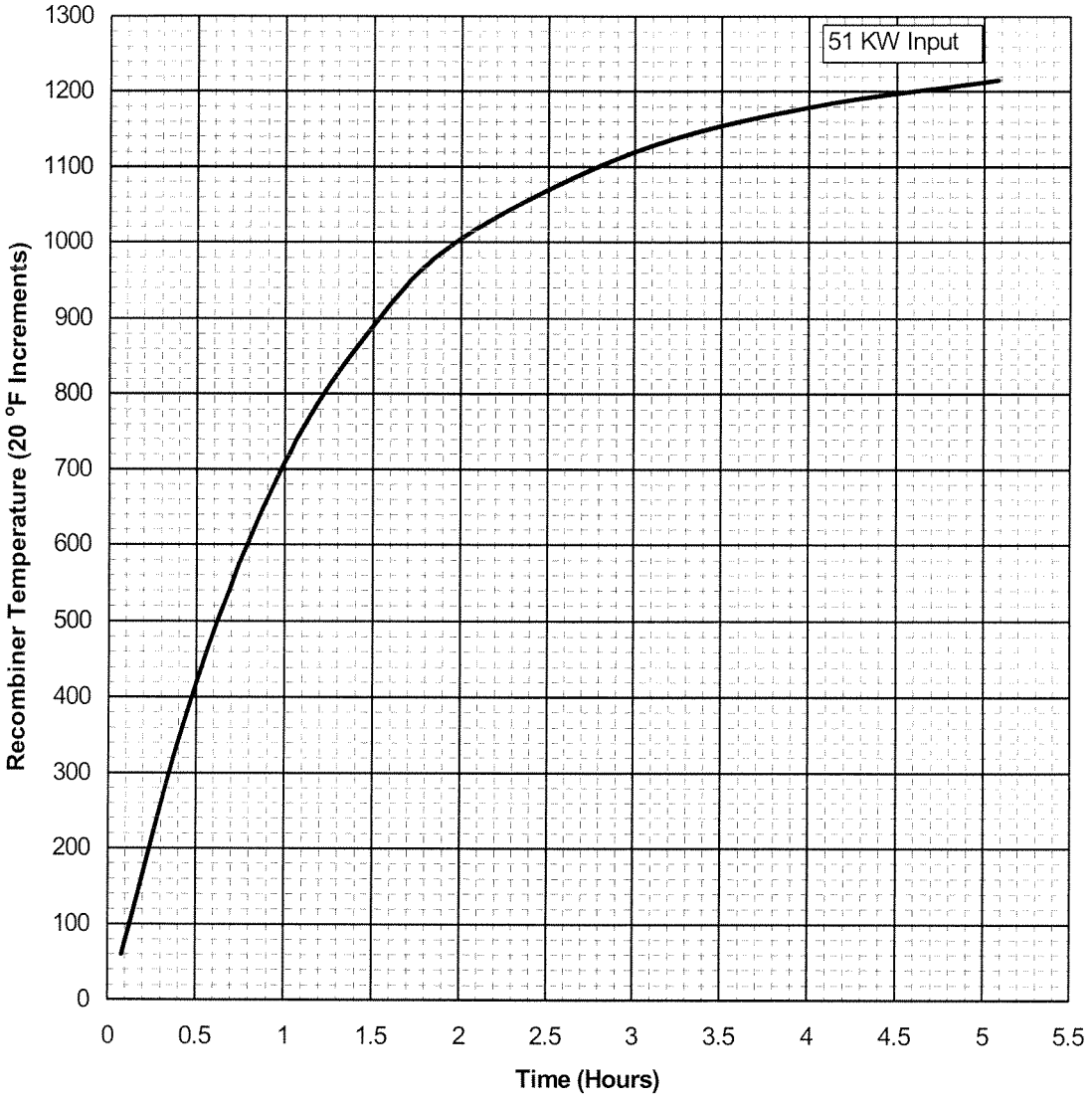

S6. Electrical

A/D/EN/S

K/A 064 A4.07

A1JPM-RO-EDG04
Emergency Diesel Generator system

RO/SRO

JOB PERFORMANCE MEASURE

Unit: 1 Rev # 3 Date: _____

JPM ID: A1JPM-RO-EDG04

System/Duty Area: Emergency Diesel Generator (EDG) System

Task: Parallel DG1 to the Grid

JTA# ANO1-RO-EDG-NORM-10

KA Value RO 3.4 SRO 3.4 KA Reference 064 A4.07

Approved For Administration To: RO X SRO X

Task Location: Inside CR: X Outside CR: _____ Both: _____

Suggested Testing Environment And Method (Perform or Simulate):

Plant Site: _____ Simulator: Perform Lab: _____

Position Evaluated: RO: X SRO: X

Actual Testing Environment: Simulator: X Plant Site: _____ Lab: _____

Testing Method: Simulate: _____ Perform: X

Approximate Completion Time In Minutes: 10 Minutes

Reference(s): 1104.036 Emergency Diesel Generator Operation

Examinee's Name: _____ SSN: _____

Evaluator's Name: _____

The Examinee's performance was evaluated against the standards contained in this JPM and is determined to be:

Satisfactory: _____ Unsatisfactory: _____

Performance Checklist Comments:

_____

_____

_____

Start Time _____ Stop Time _____ Total Time _____

*Signed: _____ Date: _____

*Signature indicates this JPM has been compared to its applicable procedure by a qualified individual (not the examinee) and is current with that revision.

JPM ID: A1JPM-RO-EDG04

THE EXAMINER SHALL REVIEW THE FOLLOWING WITH THE EXAMINEE:

The examiner shall review the "Briefing Checklist - System Walkthrough" portion of OP 1064.023 Attachment 6 with the examinee.

JPM INITIAL TASK CONDITIONS:

DG1 is running with its output breaker open and its service water inlet valve (CV-3806) open.

TASK STANDARD:

DG1 tripped (due to its load continuing to rise uncontrollably). ***PRIOR to EDG TRIPPING ON ITS ON***

This is an Alternate Success Path JPM.

TASK PERFORMANCE AIDS:

Synch switch handle, 1104.036 Section 7.0.

SIMULATOR SETUP:

- Start VEF-24A and VEF-24B DG Room Exhaust Fans on C19.
- Verify DG1 Volts Select switch NOT in OFF on C10.
- Start DG1 on C10.
- Verify CV-3806 open (SW to DG1).

When the DG1 output breaker is closed, then insert switch override C10 DI_DG1_GV_LW Lower, DG1, Governor Control to FALSE and insert switch override C10 DI_DG1_GV_RA Raise, DG1, Governor Control to TRUE which will fail the governor handswitch in the raise position, this will cause the DG1 load to rise without control.

- **IOR DI_DG1_GV_LW False**
- **IOR DI_DG1_GV_RA True**

JPM ID: A1JPM-RO-EDG04

INITIATING CUE: The CRS/SM directs you to parallel DG1 to the grid and load DG1 to ~2750 KW starting at 1104.036 Step 7.11. All procedural steps from 7.1 to 7.10 have been performed and/or acknowledged for DG1.

Critical Tasks: 1, 3, 4, and 5

C	PERFORMANCE CHECKLIST	STANDARD	N/A	SAT	UNSAT
C	1. Place Synchronize switch for DG1 Output Breaker A-308 to ON. POSITIVE CUE: Incoming and running voltmeters indicating; synchroscope rotating. NEGATIVE CUE: Synchroscope off.	On C10, placed Synchronize switch for breaker A-308 to ON position.	___	___	___
	2. Adjust DG1 voltage regulator (INCOMING) to within a range of RUNNING voltage -0/+20 volts. POSITIVE CUE: INCOMING and RUNNING voltages are matched. NOTE: Voltages may be verified matched on C10 or SPDS or on plant computer.	On C10, adjusted DG1 voltage regulator control switch to match INCOMING voltage to within a range of RUNNING voltage -0/+20 volts.	___	___	___
C	3. Adjust DG1 governor control until frequency is ~60 Hz with synchroscope rotating slowly in FAST direction (clockwise). POSITIVE CUE: Frequency ~60 Hz, synchroscope slowly in FAST direction. NEGATIVE CUE: Synchroscope rotating in the SLOW direction.	On C10, adjusted DG1 governor control switch to achieve frequency at ~60 Hz with synchroscope rotating slowly in FAST direction (clockwise).	___	___	___

JPM ID: A1JPM-RO-EDG04

C	PERFORMANCE CHECKLIST	STANDARD	N/A	SAT	UNSAT
NOTE: IA Operator → When the DG1 output breaker is closed, then insert switch override C10 DI_DG1_GV_LW Lower, DG1, Governor Control to FALSE and insert switch override C10 DI_DG1_GV_RA Raise, DG1, Governor Control to TRUE which will fail the governor handswitch in the raise position, this will cause the DG1 load to rise without control. • **IOR DI_DG1_GV_LW False** • **IOR DI_DG1_GV_RA True**					
C	4. As synchroscope approaches 12 o'clock position (~5 min. 'til) close DG1 Output Breaker A-308. POSITIVE CUE: A-308 red light ON, green light OFF.	On C10, closed DG1 Output Breaker A-308.	___	___	___
C	5. Operator identifies uncontrollable rising load and trips DG1. POSITIVE CUE: DG1 green light ON, red light OFF. NEGATIVE CUE: DG1 load at 2800 KW and rising.	On C10, tripped DG1 (stop pushbutton or to lockout). ***PRIOR to EDG TRIPPING ON ITS ON***	___	___	___

END

JPM ID: A1JPM-RO-EDG04

INITIAL CONDITIONS:

DG1 is running with its output breaker open and its service water inlet valve (CV-3806) open.

INITIATING CUE:

The CRS/SM directs you to parallel DG1 to the grid and load DG1 to ~2750 KW starting at 1104.036 Step 7.11. All procedural steps from 7.1 to 7.10 have been performed and/or acknowledged for DG1.

ENTERGY OPERATIONS INCORPORATED
ARKANSAS NUCLEAR ONE

TITLE: **EMERGENCY DIESEL GENERATOR OPERATION**	DOCUMENT NO. **1104.036**	CHANGE NO. **048**
	WORK PLAN EXP. DATE **N/A**	
SET #	SAFETY-RELATED ☒YES ☐NO	IPTE ☐YES ☒NO
	TEMP MOD ☐YES ☒NO	LEVEL OF USE ☒ CONTINUOUS ☐ REFERENCE ☐ INFORMATIONAL
	PROGRAMMATIC EXCLUSION PER EN-LI-100 ☐YES ☒NO	

When you see these ***TRAPS***	Get these ***TOOLS***
Time Pressure	**Effective Communication**
Distraction/Interruption	**Questioning Attitude**
Multiple Tasks	**Placekeeping**
Over Confidence	**Self Check**
Vague or Interpretive Guidance	**Peer Check**
First Shift/Last Shift	**Knowledge**
Peer Pressure	**Procedures**
Change/Off Normal	**Job Briefing**
Physical Environment	**Coaching**
Mental Stress (Home or Work)	**Turnover**

VERIFIED BY	DATE	TIME

FORM TITLE:	FORM NO.	CHANGE NO.
VERIFICATION COVER SHEET	**1000.006A**	**054**

7.0 DG1 START FROM CONTROL ROOM

7.1 IF DG1 will be tied to the grid,
THEN contact Dispatcher with the following information exchange:

7.1.1 Notify Dispatcher that DG1 will be paralleled to the grid.

7.1.2 Verify no off-site grid disturbance is expected, such as a severe electrical storm in the area.

7.1.3 Request dispatcher to notify ANO Unit 1 if any disturbances develop.

7.1.4 Review the Switchyard Impact book for activities that would conflict with this diesel run.

7.2 Review Limits and Precautions of this procedure.

7.3 Obtain the following:

- Cylinder drain cock tool
- Engine jacking mechanism
- Hearing protection

7.4 Check engine lube oil level between 1/4" and 1" above dipstick full mark with engine stopped.

N/A

7.4.1 IF oil level between 1/4" above and 1" below full mark,
THEN submit WR/WO for oil addition.

7.4.2 IF oil level 1" below or 1.25" above full mark,
THEN perform the following:

N/A

A. Stop this run until oil added/removed as applicable.

B. Initiate CR.

7.4.3 IF oil level 2.5" below or 1.5" above full mark,
THEN perform the following:

N/A

A. Stop the run.

B. Notify SM.

C. Declare diesel inoperable but available.

NOTE

- Governor oil level is intended to be maintained between the high and low marks when the EDG is in operation.
- Governor should operate normally with high oil level.
- Governor oil level will rise when the EDG is shutdown.

7.5 Check governor oil level +/- 1/4" from oil level mark on sightglass (CR-ANO-C-2004-0526-41).

7.5.1 IF low,
THEN submit WR/WO for oil addition.
N/A

7.5.2 IF empty,
N/A THEN stop this run until oil added
AND notify SM.

7.5.3 IF governor oil level above the sightglass,
N/A THEN submit WR/WO for oil removal.

7.6 Check DG1 Cooling Water Expansion Tank (T-78A) level between 6" and 8" (high in STOP level band).

7.6.1 IF <6",
THEN add DI water per "Adding To Cooling Water
N/A Expansion Tank T-78A/B" section of this procedure.

7.7 Verify Service Water Loop I in service.

CAUTION

Placing Engine Control selector switch in MAINT to perform "Compression Cylinder Inleakage Test" will prevent diesel start, rendering DG1 inoperable.

7.8 Verify no compression cylinder inleakage as follows:

7.8.1 IF ANY of the following conditions exist,

- DG2 inoperable
- Any Tech Spec required green train ES component inoperable
- DG1 has been run within the last 24 hours
- DG1 has had the cylinder drain check performed within the last 24 hours

N/A

THEN N/A the remaining steps of 7.8.

7.8.2 Perform the following:

A. IF in Modes 1-4,
THEN verify entry in TS 3.8.1 Condition B.

B. Notify Unit 2 that DG1 is inoperable.

NA

C. IF B55/B56 aligned to B5,
THEN verify Unit 2 has taken the appropriate actions as identified in Attachment B (Table 3) of 2104.007 (Control Room Emergency Air Conditioning and Ventilation).

D. IF DG1 inoperability will exceed 1 hour,
THEN perform the following:

- Complete 1107.001, Sup 10, Verification of Two Offsite Circuit Power Sources.
- IF practicable,
  THEN align B55/B56 to B6.
- IF practicable,
  THEN align OP and STBY HPI pumps to A4.
- IF practicable,
  THEN align P-4B to A4.

7.8.3 IF power is lost to ANY ES bus during performance of this section of the procedure,
THEN perform the following:

A. Verify MCC B55 and B56 powered from energized bus.

N/A

B. Remove engine jacking mechanism.

C. Close all cylinder drain cocks snugly using the cylinder drain cock tool.

D. Return DG1 Engine Control selector switch (HS-5234) on C107 to REMOTE.

E. Exit this section.

7.8.4 N/A Place DG1 Engine Control selector switch (HS-5234) on C107 in MAINT.

7.8.5 N/A Make entry in station log of time Engine Control selector switch placed in MAINT.

7.8.6 Open all cylinder drain cocks ~3 turns.

N/A

CAUTION

Water or oil exiting ports prior to engine rollover indicates gross jacket water or fuel system failure.

7.8.7 Observe cylinder drain cock ports for water or oil.

7.8.8 IF drainage is observed,
THEN perform the following.

A. Do NOT roll over diesel as engine damage will occur.

B. Mark affected cylinder(s) on vibration reading datasheet diesel illustration AND note type of liquid observed.

C. Discontinue this run AND notify SM that DG1 is inoperable.

7.8.9 Roll over diesel by installing engine jacking mechanism AND manually jacking engine over at least one full turn.

N/A

7.8.10 Remove engine jacking mechanism.

7.8.11 Observe cylinder drain cock ports for water or oil.

7.8.12 IF drainage is observed,
THEN discontinue this run AND notify SM that DG1 is inoperable.

7.8.13 Close all cylinder drain cocks snugly using the cylinder drain cock tool.

7.8.14 Place DG1 Engine Control selector switch (HS-5234) on C107 in REMOTE.

7.8.15 IF TS Condition was entered solely for HS in MAINTENANCE,
THEN exit TS 3.8.1 Condition B.

7.8.16 Notify Unit 2 that DG1 is operable.

7.8.17 Return cylinder drain cock tool and engine jacking mechanism to appropriate storage location.

7.9 Start the Diesel Generator as follows:

7.9.1 Perform the following on C19 or locally:

- Verify VEF-24A running.
- Verify VEF-24B running.
- Check damper TV-7901A open.
- Check damper TV-7901B open.

7.9.2 Verify DG1 Volts Select switch on C10 NOT in OFF.

7.9.3 Depress DG1 START pushbutton on C10.

7.9.4 Verify Service Water to DG1 Coolers (CV-3806) opens.

CAUTION

With DG paralleled to the grid, grid disturbance could cause damage to DG.

7.10 IF DG1 is paralleled to the grid AND the reactor trips or offsite power is lost, THEN perform the following:

7.10.1 Verify ONE of the following conditions:

A. DG1 feeding A3 and separated from the grid as follows:

- A1 to A3 Feeder Breaker (A-309) open.
- DG1 Output Breaker (A-308) closed.

B. DG1 idling as follows:

- A1 to A3 Feeder Breaker (A-309) closed.
- DG1 Output Breaker (A-308) open.

7.10.2 Adjust DG1 voltage to ~4160 volts and frequency to ~ 60 Hz.

CAUTION

Diesel run time unloaded or at low load (<75%) should be minimized in order to prevent carbon fouling (improper combustion) and excessive turbocharger gear train wear.

NOTE

- To burn out carbon fouling in the exhaust system when diesel has run with <20% load for ≥4.5 hours, it is recommended that it be loaded ≥75% for ≥30 minutes.
- SPDS points (E1A3), ES Bus A3 voltage (running) and (E1DG1), DG1 voltage (incoming) can be used as comparison points.

7.11 Parallel DG1 to the grid as follows:

7.11.1 Place Synchronize switch for DG1 Output Breaker (A-308) to ON.

7.11.2 Adjust DG voltage regulator (INCOMING) to within a range of RUNNING voltage -0/+20 volts (prefer near match).

7.11.3 Adjust DG1 governor control until frequency is ~60 Hz with synchroscope rotating slowly in FAST direction (clockwise).

CAUTION

A delay in loading diesel after closing output breaker may result in generator motoring which causes lockout relay to actuate and trip DG output breaker and shutdown the engine.

NOTE

- If synchroscope is rotating too fast, sync-check relay will prevent breaker from closing.
- Gradual and uniform load changes minimize engine wear and internal stresses. A 100% load change should take ~90 sec. Longer loading times are acceptable when delays are caused by reactive load adjustments or equipment monitoring.

7.11.4 As synchroscope approaches 12 o'clock position (~5 min 'til), close DG1 Output Breaker (A-308).

A. Immediately begin raising load gradually to full load (2750 KW) using DG1 governor control (~90 seconds).

B. Maintain ~0 KVARs using DG1 voltage regulator.

7.11.5 Place synchronize switch for DG1 Output Breaker (A-308) to OFF.

7.12 Begin taking DG logs every 30 minutes at full load for the first hour and hourly thereafter per DG1 Logsheet (OPS-A15a).

S7. Instrumentation

D/E/S

K/A B/W E02 EA1.1

A1JPM-RO-RPS05
Place Channel A in a tripped condition

RO only

JOB PERFORMANCE MEASURE

Unit: 1 Rev # 0 Date: _____

JPM ID A1-JPM-RO-RPS05

System/Duty Area: Reactor Protection System

Task: Place Channel "A" in a Tripped Condition

JA# ANO1-RO-RPS-NORM-4

KA Value RO 4.0 SRO 3.6 KA Reference B/W E02.EA1.1

Approved For Administration To: RO X SRO X

Task Location: Inside CR: X Outside CR: _____ Both: _____

Suggested Testing Environment And Method (Perform Or Simulate #):

Plant Site: _____ Simulator#: Perform Lab: _____

Position Evaluated: RO: X SRO: _____

Actual Testing Environment: Simulator: X Plant Site: _____ Lab _____

Testing Method: Simulate: _____ Perform: _____

Approximate Completion Time In Minutes: 10 Minutes

Reference(S) : 1105.001 NI & RPS OPERATING PROCEDURE

Examinee's Name: _____ SSN: _____

Evaluator's Name: _____

The Examinee's performance was evaluated against the standards contained in this JPM and is determined to be:

Satisfactory: _____ Unsatisfactory: _____

Performance Checklist Comments:

_____

_____

_____

Start Time _____ Stop Time _____ Total Time _____

Signed _____ Date: _____

 # SIGNATURE INDICATES THIS JPM HAS BEEN COMPARED TO ITS APPLICABLE PROCEDURE BY A QUALIFIED INDIVIDUAL (NOT THE EXAMINEE) AND IS CURRENT WITH THAT REVISION.

JPM ID: A1-JPM-RO-RPS05

THE EXAMINER SHALL REVIEW THE FOLLOWING WITH THE EXAMINEE:

The examiner shall review the "Briefing Checklist - System Walkthrough" portion of OP 1064.023 Attachment 6 with the examinee.

JPM INITIAL TASK CONDITIONS: **Plant at any at power level with no EFIC or RPS channels in bypass.**

TASK STANDARD: **"A" RPS Channel in a Tripped Condition**

TASK PERFORMANCE: **1105.001** **NI & RPS OPERATING PROCEDURE STEP 13**

JPM ID: A1-JPM-RO-RPS05

INITIATING CUE: The CRS directs you to Place Channel "A" in a Tripped Condition per 'Placing a Channel in a Tripped Condition in Support of NI Calibration, Channel Maintenance or Channel Calibration When One Channel is Inoperable' section of 'NI & RPS OPERATING PROCEDURE' (1105.001) through step 13.5.

C	PERFORMANCE CHECKLIST	STANDARD	N/A	SAT	UN SAT
	1. Verify no RPS channel tripped. POSITIVE CUE: RPS Channel "A", "B", "C", and "D" Trip module REACTOR TRIP light is on dim.	Observed RPS Channel "A", "B", "C", and "D" Trip module REACTOR TRIP light on dim.	____	____	____
C	2. Verify channel that is to be tripped is NOT in Manual Bypass. POSITIVE CUE: RPS Channel "A" maintenance bypass key is not inserted in Trip Module.	Observed RPS Channel "A" maintenance bypass key not inserted in Trip Module.	____	____	____
C	3. Momentarily depress the top Test switch on the Building Pressure Contact Buffer. POSITIVE CUE: Top Test switch on the Building Pressure Contact Buffer is depressed.	Top Test switch on the Building Pressure Contact Buffer depressed.	____	____	____
	4. Verify the following: • On Building Pressure Contact Buffer, both Input State lamps go ON. • The Reactor Trip module Subsystem Trip lamp goes ON bright. • All RPS Channel Reactor Trip modules and Indicating Panel Protective Subsystem lamps for the tripped channel go ON bright. POSITIVE CUE: Building Pressure Contact Buffer, both Input State lamps are ON. The Reactor Trip module Subsystem Trip lamp are ON bright. All RPS Channel Reactor Trip modules and Indicating Panel Protective Subsystem lamps for the "A" channel are ON bright. NEGATIVE CUE: Building Pressure Contact Buffer, both Input State lamps are OFF. The Reactor Trip module Subsystem Trip lamp are DIM. All RPS Channel Reactor Trip modules and Indicating Panel Protective Subsystem lamps for the "A" channel are DIM.	Observed the following: • On Building Pressure Contact Buffer, both Input State lamps go ON. • The Reactor Trip module Subsystem Trip lamp goes ON bright. • All RPS Channel Reactor Trip modules and Indicating Panel Protective Subsystem lamps for the tripped channel go ON bright.	____	____	____

Continued

JPM ID: A1-JPM-RO-RPS05

C	PERFORMANCE CHECKLIST	STANDARD	N/A	SAT	UN SAT
	5. Make station log entry stating RPS Channel (A, B, C or D) has been manually tripped to satisfy LCO 3.3.1 Required Action A.1. POSITIVE CUE: Additional operator has made the station log entry.	Direct or initiate station log entry.	____	____	____

END

JPM NUMBER: A1-JPM-RO-RPS05

INITIAL CONDITIONS:

Plant is at 100% power

INITIATING CUE:

The CRS directs you to Place Channel "A" in a Tripped Condition per 'Placing a Channel in a Tripped Condition in Support of NI Calibration, Channel Maintenance or Channel Calibration When One Channel is Inoperable' section of 'NI & RPS OPERATING PROCEDURE' (1105.001) through step 13.5.

ENTERGY OPERATIONS INCORPORATED
ARKANSAS NUCLEAR ONE

TITLE: **NI & RPS OPERATING PROCEDURE**	DOCUMENT NO. **1105.001**	CHANGE NO. **023**
	WORK PLAN EXP. DATE **N/A**	TC EXP. DATE **N/A**
SET #	SAFETY-RELATED ☒YES ☐NO	IPTE ☐YES ☒NO
	TEMP ALT ☐YES ☒NO	LEVEL OF USE ☒ CONTINUOUS ☐ REFERENCE ☐ INFORMATIONAL
	PROGRAMMATIC EXCLUSION PER EN-LI-100 ☐YES ☒NO	

When you see these ***TRAPS***	Get these ***TOOLS***
Time Pressure	**Effective Communication**
Distraction/Interruption	**Questioning Attitude**
Multiple Tasks	**Placekeeping**
Over Confidence	**Self Check**
Vague or Interpretive Guidance	**Peer Check**
First Shift/Last Shift	**Knowledge**
Peer Pressure	**Procedures**
Change/Off Normal	**Job Briefing**
Physical Environment	**Coaching**
Mental Stress (Home or Work)	**Turnover**

VERIFIED BY	DATE	TIME

FORM TITLE:	FORM NO.	CHANGE NO.
VERIFICATION COVER SHEET	**1000.006A**	**053**

NOTE

- De-energizing the Programmer Control Assembly is NOT required for a DC breaker failure.
- Failure of either the undervoltage or shunt trip device in an CRD trip breaker requires entering TS 3.3.4 Condition A.
- Failure of CRD trip breaker for reasons other than loss of either undervoltage or shunt trip device requires performance of TS 3.3.4 Condition B actions within 1 hour.
- Per TS 3.3.4 Bases, the electronic trip relays associated with Group 8 are not required to be tripped.

12.5.2 IF desired,
THEN in the following cabinets, pull the Programmer Control Assembly 120V BUS 2 (F-3) fuse.

- CRD System Aux Supply A (C-72)
- CRD System Group 5 Regulating Supply A (C-64)
- CRD System Group 6 Regulating Supply A (C-66)
- CRD System Group 7 Regulating Supply A (C-68)

13.0 Placing a Channel in a Tripped Condition in Support of NI Calibration, Channel Maintenance or Channel Calibration When One Channel is Inoperable

CAUTION

Tripping an RPS channel with one channel already tripped will cause a reactor trip.

NOTE

- The Reactor Trip module Test Trip lamp will illuminate bright while the top Test switch on the Building Pressure Contact Buffer is depressed.
- SRO Peer Check is required for all action steps contained in this section.

13.1 Verify no RPS channel tripped.

13.2 Verify channel that is to be tripped is NOT in Manual Bypass.

13.3 For channel selected to be tripped, momentarily depress the top Test switch on the Building Pressure Contact Buffer.

13.4 Verify the following:

13.4.1 On Building Pressure Contact Buffer, both Input State lamps go ON.

13.4.2 The Reactor Trip module Subsystem Trip lamp goes ON bright.

13.4.3 All RPS Channel Reactor Trip modules and Indicating Panel Protective Subsystem lamps for the tripped channel go ON bright.

13.5 Make station log entry stating RPS Channel (A, B, C or D) has been manually tripped to satisfy LCO 3.3.1 Required Action A.1.

NOTE

- Test and Maintenance Tags are not required to be removed.
- SASS Trip may occur due to maintenance.
- I&C procedure or work order should direct the positioning of Neutron Flux HS (HS-509) depending on the work performed.

13.6 IF danger tags installed,
THEN remove Protective Tag from Manual Bypass key switches (Channel Bypass) on untripped channels per Protective and Caution Tagging (EN-OP-102).

13.6.1 Make station log entry stating "tags have been removed on RPS Channels (list channels)".

NOTE

- Test and Maintenance Tags are not required to be removed.
- SASS Trip may occur due to maintenance.
- I&C procedure or work order should direct the positioning of Neutron Flux HS (HS-509) depending on the work performed.

13.7 IF desired to perform NI Calibration,
THEN direct I&C to perform NI Calibration.

13.7.1 For each channel to be bypassed, enter TS 3.3.1 Condition B for 2 channels of RPS inoperable.

NOTE

TS 3.3.1 Required Action B.1 is met at the completion of step 13.4.

13.8 IF desired to perform RPS Channel Calibration or Maintenance,
THEN direct I&C to perform RPS Channel Calibration or Maintenance.

13.8.1 For each channel to be bypassed, enter TS 3.3.1 Condition B for 2 channels of RPS inoperable.

13.9 WHEN RPS NI Calibration, Channel Maintenance or Channel Calibration is complete,
THEN restore RPS by performing the following:

13.9.1 Verify operable RPS channels are not in Bypass.

13.9.2 Verify a Tag (Danger or Test and Maintenance) on Manual Bypass key switches (Channel Bypass) on untripped channels per Protective and Caution Tagging (EN-OP-102).

NOTE

The following step when completed, satisfies required action A.2 for TS 3.3.1 Condition A with a RPS Channel inoperable.

13.9.3 Make station log entry stating "tags are installed on RPS Channels (list channels) to administratively prevent placing channels in bypass. This statisfies LCO 3.3.1 Required Action A.2."

13.9.4 Reset tripped RPS Channel by performing the following:

A. Verify all Test modules are in OPERATE with the On Test lamps on DIM.

B. IF any bistables have Output State and/or Output Memory lamps on BRIGHT,
THEN perform the following for those bistables:

- Depress AND release the Output State switch.
- Depress AND release the Output Memory Reset switch.

C. Verify Building Pressure contact buffer reset (both Input State lamps are OFF).

D. Reset Channel Reactor Trip Module.

E. Check Subsystem lamps on DIM for the following:

- Channel "A" Reactor Trip module
- Channel "A" Cabinet Indicating Panel
- Channel "B" Reactor Trip module
- Channel "B" Cabinet Indicating Panel

- Channel "C" Reactor Trip module
- Channel "C" Cabinet Indicating Panel
- Channel "D" Reactor Trip module
- Channel "D" Cabinet Indicating Panel

13.10 IF SASS has tripped,
THEN return tripped SASS control to AUTO (SASS ENABLED) per Reactor Coolant System NNI (1105.006).

S8. Plant Service systems

D/L/P/S

K/A 008 A 2.01

A1JPM-RO-ICW01
Contingency actions for loss of two ICW pumps

RO only

JOB PERFORMANCE MEASURE

Unit: 1 Rev # 2 Date: _____

JPM ID: A1JPM-RO-ICW01

System/Duty Area: Intermediate Cooling Water System

Task: Contingency Actions for Loss of Two ICW Pumps

JTA# ANO1-RO-ICW-NORM-4

KA Value RO 3.3 SRO 3.6 KA Reference: 008 A2.01

Approved For Administration To: RO X SRO X

Task Location: Inside CR X Outside CR _____ Both _____

Suggested Testing Environment and Method (Perform or Simulate):

Plant Site: _____ Simulator: Perform Lab: _____

Position Evaluated: RO: _____ SRO: _____

Actual Testing Environment: Plant Site _____ Simulator X Lab _____

Testing Method: Perform _____ Simulate _____

Approximate Completion Time in Minutes: 5 Minutes

Reference(s): 1104.028 Section 20.0

Examinee's Name: _____ SSN: _____

Evaluator's Name: _____

The Examinee's performance was evaluated against the standards contained in this JPM and is determined to be:

Satisfactory: _____ Unsatisfactory: _____

Performance Checklist Comments:

Start Time _____ Stop Time _____ Total Time _____

*Signed _____ Date _____

*Signature indicates this JPM has been compared to its applicable procedure by a qualified individual (not the examinee) and is current with that revision.

JPM ID: A1JPM-RO-ICW01

THE EXAMINER SHALL REVIEW THE FOLLOWING WITH THE EXAMINEE:

The examiner shall review the "Briefing Checklist - System Walkthrough" portion of OP 1064.023 Attachment 6 with the examinee

JPM INITIAL TASK CONDITIONS:

ICW Pump P-33A is OOS for bearing replacement.
ICW Pump P-33B has just tripped.

TASK STANDARD:

P-33B operating with all cross-connects open, ICW total flow < 3100 gpm and letdown re-established to ~ 60 gpm..

TASK PERFORMANCE AIDS:

1104.028 ICW System Operating Procedure, Section 20.0.

SIMULATOR SETUP:

Plant at ~ 3% power.

IC with P-33B and P-33C in service per 11-4.028. Breaker for P-33A is open **IRF B1264 OPEN.**
Adjust letdown flow to ~60 gpm.

To trip P-33B use **IRF B2214 OPEN.** Ensure that letdown didn't isolate on high temperature.

Place the simulator in Freeze and to to run after giving initial conditions and initiating cue.

JPM ID: A1JPM-RO-ICW01

INITIATING CUE: The SM/CRS directs you to perform the Contingency Actions for Loss of Two ICW Pumps in procedure 1104.028 through step 20.10.

C	PERFORMANCE CHECKLIST	STANDARD	N/A	SAT	UN SAT
	1. Place the handswitch for the tripped ICW pump in PULL-TO-LOCK. POSITIVE CUE: P-33A Handswitch is in P-T-L.	On C09, the handswitch for P-33A is placed in the P-T-L position.	___	___	___
C	2. Open the following valves: • ICW Pump Suction Crossconnect CV-2240 • ICW Pump Suction Crossconnect CV-2241 • ICW Pump Discharge Crossconnect CV-2238 • ICW Pump Discharge Crossconnect CV-2239 POSITIVE CUE: Red lights ON, green lights OFF for all four valves.	On C09, the handswitches for CV-2240 and CV-2238 are placed in the "OPEN" position and the RED lights are "ON" and the GREEN lights are "OFF". (NOTE: CV-2241 and CV-2239 should already be open.)	___	___	___
	3. Close the following valves to isolate letdown: • Letdown Orifice Block Bypass (CV-1223) • Letdown Orifice Block (CV-1222) POSITIVE CUE: Letdown flow at zero.	On C04, isolated letdown by rotating the setpoint knob on CV-1223 to "zero" and placed the handswitch for CV-1222 to close. Monitored FI-1236 and verified flow drops to ~0 GPM.	___	___	___
C	4. Isolate both Letdown Coolers (E-29A and E-29B) by closing the following valve pairs from C04: • E-29A HS-2216 for Letdown Cooler Inlet Valve (CV-2216) and RC to Letdown Cooler E-29A (CV-1213) • E-29B HS-2217 for Letdown Cooler Inlet Valve (CV-2217) and RC to Letdown Cooler E-29B (CV-1215) POSITIVE CUE: Green lights only ON for CV-2216, CV-1213, CV-2217 and CV-1215.	On C04, placed HS-2216 and HS-2217 in the close position to isolate both Letdown Coolers.	___	___	___

JPM ID: A1JPM-RO-ICW01

NOTE to IA Operator: When called as WCO to close ICW-121A/B then close ICW-120A/B cooler inlets due to cooler outlets are not modeled on the simulator. **IRF ICW120A 0** and **IRF ICW120B 0**					
C	5. Isolate both SFP Coolers (E-27A and E-27B) by closing the following: • SFP Clr E-27A ICW Outlet (ICW-121A) • SFP Clr E-27B ICW Outlet (ICW-121B) POSITIVE CUE: WCO reports ICW-121A/B are closed.	Contacted WCO to close ICW-121A and ICW-121B.	___	___	___
INSTRUCTOR NOTE: Inform Examinee to return E-29A Letdown Cooler to service.					
C	6. Open Letdown Cooler Inlet valve CV-2216 and RC to Letdown Cooler E-29A CV-1213. POSITIVE CUE: Red lights ON, green lights OFF for CV-2216 and CV-1213.	On C04, placed HS-2216 in the open position to open CV-2216 and CV-1213.	___	___	___
	7. Verify combined flow from Nuclear and Non-nuclear loop is <3100 GPM. POSITIVE CUE: Flow is <3100 gpm.	Using the ICW flow indicators on C09, calculated the total flow of both nuclear and non-nuclear loops to be < 3100 gpm.	___	___	___
C	8. Establish letdown by opening Letdown Orifice Block (CV-1222). POSITIVE CUE: ~45 gpm letdown flow indicated on C04.	On panel C04, positioned the handswitch for CV-1222 to the open position.	___	___	___
	9. If letdown isolated on high temperature, then perform "Recovery of Letdown Following High Letdown Temperature" section of MU&P System 1104.002. POSITIVE CUE: Letdown temperature on C04 is at ~100°F.	If letdown isolated on high temperature, then performed "Recovery of Letdown Following High Letdown Temperature" section of MU&P System 1104.002.	___	___	___
INSTRUCTOR NOTE: Inform Examinee to raise letdown flow to ~60 gpm.					
C	10. While keeping within the capacity of one letdown cooler (87.5 gpm) raise letdown flow as desired with CV-1223. POSITIVE CUE: Letdown flow is ~ 60 gpm.	On C04, rotated the setpoint knob on CV-1223 to achieve ~60 gpm letdown flow.	___	___	___

END

JPM ID: A1JPM-RO-ICW01

INITIAL CONDITIONS:

ICW Pump P-33A is OOS for bearing replacement.
ICW Pump P-33B has just tripped.

INITIATING CUE:

INITIATING CUE: The SM/CRS directs you to perform the Contingency Actions for Loss of Two ICW Pumps in procedure 1104.028 through step 20.10.

ENTERGY OPERATIONS INCORPORATED
ARKANSAS NUCLEAR ONE

TITLE: **ICW SYSTEM OPERATING PROCEDURE**	DOCUMENT NO. **1104.028**	CHANGE NO. **026**
	WORK PLAN EXP. DATE **N/A**	TC EXP. DATE **N/A**
SET #	SAFETY-RELATED ☒YES ☐NO	IPTE ☐YES ☒NO
	TEMP ALT ☒YES ☐NO	LEVEL OF USE ☒ CONTINUOUS ☐ REFERENCE ☐ INFORMATIONAL
	PROGRAMMATIC EXCLUSION PER EN-LI-100 ☐YES ☒NO	

When you see these *TRAPS*	**Get these *TOOLS***
Time Pressure	**Effective Communication**
Distraction/Interruption	**Questioning Attitude**
Multiple Tasks	**Placekeeping**
Over Confidence	**Self Check**
Vague or Interpretive Guidance	**Peer Check**
First Shift/Last Shift	**Knowledge**
Peer Pressure	**Procedures**
Change/Off Normal	**Job Briefing**
Physical Environment	**Coaching**
Mental Stress (Home or Work)	**Turnover**

VERIFIED BY	DATE	TIME

FORM TITLE: **VERIFICATION COVER SHEET**	FORM NO. **1000.006A**	CHANGE NO. **053**

20.0 Contingency Actions for Loss of Two ICW Pumps

CAUTION

Operation of one ICW pump with the cross-connect valves open will result in pump operation at runout conditions. Pump cavitation can occur and there is elevated risk for motor breaker trip until ICW loads are reduced.

20.1 Place tripped ICW pump(s) in PULL-TO-LOCK.

20.2 Open the following valves:

- ICW Pump Suction Crossconnect CV-2240
- ICW Pump Suction Crossconnect CV-2241
- ICW Pump Discharge Crossconnect CV-2238
- ICW Pump Discharge Crossconnect CV-2239

20.3 Close the following valves to isolate letdown:

- Letdown Orifice Block Bypass (CV-1223)
- Letdown Orifice Block (CV-1222)

20.4 Isolate both Letdown Coolers (E-29A and E-29B) by closing the following valve pairs from C04:

- E-29A HS-2216 for Letdown Cooler Inlet Valve (CV-2216) and RC to Letdown Cooler E-29A (CV-1213)
- E-29B HS-2217 for Letdown Cooler Inlet Valve (CV-2217) and RC to Letdown Cooler E-29B (CV-1215)

20.5 Isolate both SFP Coolers (E-27A, E-27B) by closing the following:

- SFP Clr E-27A ICW Outlet (ICW-121A)
- SFP Clr E-27B ICW Outlet (ICW-121B)

20.6 Return one Letdown Cooler to service by opening one of the following valve pairs from C04:

- E-29A HS-2216 for Letdown Cooler Inlet Valve (CV-2216) and RC to Letdown Cooler E-29A (CV-1213)
- E-29B HS-2217 for Letdown Cooler Inlet Valve (CV-2217) and RC to Letdown Cooler E-29B (CV-1215)

20.7 Verify combined ICW flow is ≤ 3100 gpm.

20.8 Establish letdown by opening Letdown Orifice Block (CV-1222).

20.9 IF letdown isolated on high temperature,
THEN perform "Recovery of Letdown Following High Letdown Temperature" section of Makeup and Purification System (1104.002).

20.10 While keeping within the capacity of one Letdown Cooler, raise letdown flow as desired with CV-1223.

20.11 Refer to TRM 3.7.6 Condition A for no ICW flow to Spent Fuel Cooling heat exchangers.

20.12 Contact System Engineering for immediate evaluation of single letdown cooler operation.

20.13 Refer to "Reclosing Tripped Individual Load Supply Breakers" section of Electrical System Operations (1107.001).

NOTE

Industry experience has shown there is an elevated risk of RCS leakage to ICW system after letdown cooler isolation operation.

20.14 Monitor ICW system process monitors (e.g. RI-2236, RI-2237, PMS R2236, R2237).

20.15 Monitor SFP temperature at least once per hour using plant computer point T2003 AND restore spent fuel cooling as necessary to maintain SFP temperature <150°F.

20.16 Adjust Service Water Cooling Flow to ICW Coolers as necessary to maintain ICW temperatures within the desired band.

20.17 As time permits, other non-essential ICW loads may be isolated to raise ICW system pressure AND to maintain combined ICW flow ≤ 3100 gpm.

20.17.1 Refer to table 20.1 for approximate component heat loads and flows.

20.17.2 Track repositioned valves in the Equipment Status Log.

20.18 Continue to monitor temperatures of components cooled by ICW.

20.19 WHEN desired to return to 2-pump operation, THEN perform the following:

20.19.1 Verify ICW Surge Tanks T-37A/B Level (PDIS-2228, PDIS-2229) 0.5 to 2.7 psid (1 psid = 333 gallons).

20.19.2 Vent ICW Pump(s) to be started (P-33A, B and C) as necessary:

- Non-Nuc ICW Pump P-33A Vent (ICW-1193)
- ICW Pump P-33B Vent (ICW-1191)
- Nuc ICW Pump P-33C Vent (ICW-1194)

A. Verify P-33A, B and C vent valves closed.

S9. Heat Removal from Reactor Core (secondary)

D/E/R/EN

K/A 061 K5.05

A1JPM-RO-EFW03
Relieve steam binding of an Emergency Feed water pump

RO/SRO

JOB PERFORMANCE MEASURE

Unit: 1 Rev # 8 Date: _____
JPM ID: A1JPM-RO-EFW03

System/Duty Area: Emergency Feedwater

Task: Relieve Steam Binding of an Emergency Feedwater Pump

JTA# ANO1-WCO-EFW-NORM-12

KA Value RO 3.4 SRO 3.8 KA Reference 061 A2.04

Approved For Administration To: RO X SRO X

Task Location: Inside CR: _____ Outside CR: X Both: _____

Suggested Testing Environment And Method (Perform Or Simulate):

Plant Site: Simulate Simulator: _____ Lab: _____

Position Evaluated: RO: _____ SRO: _____

Actual Testing Environment: Simulator: _____ Plant Site: X Lab _____

Testing Method: Simulate: X Perform: _____

Approximate Completion Time In Minutes: 18 Minutes

Reference(S): 1106.006, Emergency Feedwater Operation

Examinee's Name: _____ SSN: _____

Evaluator's Name: _____

The Examinee's performance was evaluated against the standards contained in this JPM and is determined to be:

Satisfactory: _____ Unsatisfactory: _____

Performance Checklist Comments:

_____

Start Time _____ Stop Time _____ Total Time _____

Signed _____ Date: _____

Signature indicates this JPM has been compared to its applicable procedure by a qualified individual (not the examinee) and is current with that revision.

JPM ID: A1JPM-RO-EFW03

THE EXAMINER SHALL REVIEW THE FOLLOWING WITH THE EXAMINEE:

The examiner shall review the "Briefing Checklist - System Walkthrough" portion of OP 1064.023 Attachment 6 with the examinee.

JPM INITIAL TASK CONDITIONS:

EFW pump P-7B is steam bound due to back leakage from the "B" OTSG, P-7B is stopped, and "B" OTSG feed line is hot. Pyrometer readings taken at the penetration, pump casing, and discharge piping are 215 °F. CV-2626 has been closed. EFW CST, T41B, temperature is 80 °F. You have a contact pyrometer in your possession (simulated).

TASK STANDARD:

P-7B pump casing is cooled to < 180 °F and P-7B is realigned for normal operation.

TASK PERFORMANCE AIDS:

Copy of OP 1106.06 Section 14.0.

INITIATING CUE: The SM/CRS directs that you relieve steam binding of EFW Pump P-7B and realign pump for normal operation. Per 1106.006 Emergency Feedwater pump Operation section 14.0 Relieving EFW pump Steam Bind steps 14.1.1 through 14.1.4 have been completed.

CRITICAL TASKs (c): 1, 2, 3, 4, and 5

C	PERFORMANCE CHECKLIST	STANDARDS	N/A	SAT	UN SAT
TRANSITION NOTE: The examinee should proceed to the Auxiliary Building 335' elevation EFW pump room.					
C	1. Shift P-7B minimum recirc flow to the discharge flume. POSITIVE CUE: FW-12B is open, valve stem is UP.	Shifted minimum recirc flow to the discharge flume by opening FW-12B.	___	___	___
INSTRUCTOR NOTE: Inform examinee that the CRS has made an entry in the Category E/Locked Component Log.					
C	2. Isolate minimum recirc flow line from P-7B to the CST. POSITIVE CUE: FW-11B is closed, valve stem is DOWN.	Isolated minimum recirc flow line from P-7B to the CST by closing FW-11B.	___	___	___
C	3. Gravity flow cold water from CST through EFW pump P-7B via minimum recirc to flume until the temperature difference between pump casing and fluid being pumped is <100 °F. POSITIVE CUE: P-7B Pump casing is cooled down to 170 °F. NEGATIVE CUE: Pump casing is NOT cooling down.	Measured temperature of P-7B using contact pyrometer. Allowed gravity flow of cold CST water through EFW pump to flume until pyrometer reading was < 180°F.	___	___	___
C	4. Align Minimum Recirc to the CST. POSITIVE CUE: FW-11B is open, stem is UP. Valve is locked.	Aligned Minimum Recirc to the CST by opening and locking FW-11B.	___	___	___
INSTRUCTOR NOTE: Inform examinee that the CRS will send another operator to perform independent verification on FW-11B.					
C	5. Isolate minimum recirc discharge to flume. POSITIVE CUE: FW-12B is closed, stem is DOWN. NEGATIVE CUE: Flow indicated on EFW flow recirc indicator FI-2801.	Isolated minimum recirc discharge to flume by closing FW-12B.	___	___	___

END

INITIAL CONDITIONS:

EFW pump P-7B is steam bound due to back leakage from the "B" OTSG, P-7B is stopped, and "B" OTSG feed line is hot. Pyrometer readings taken at the penetration, pump casing, and discharge piping are 215 °F. CV-2626 has been closed. EFW CST, T41B, temperature is 80 °F. You have a contact pyrometer in your possession (simulated).

INITIATING CUE:

The SM/CRS directs that you relieve steam binding of EFW Pump P-7B and realign pump for normal operation. Per 1106.006 Emergency Feedwater pump Operation section 14.0 Relieving EFW pump Steam Bind steps 14.1.1 through 14.1.4 have been completed.

ENTERGY OPERATIONS INCORPORATED
ARKANSAS NUCLEAR ONE

TITLE: **EMERGENCY FEEDWATER PUMP OPERATION**	DOCUMENT NO. **1106.006**	CHANGE NO. **073**
	WORK PLAN EXP. DATE **N/A**	
SET #	SAFETY-RELATED ☒YES ☐NO	IPTE ☒YES ☐NO
	TEMP MOD ☒YES ☐NO	LEVEL OF USE ☒ CONTINUOUS ☐ REFERENCE ☐ INFORMATIONAL
	PROGRAMMATIC EXCLUSION PER EN-LI-100 ☐YES ☒NO	

When you see these ***TRAPS***	Get these ***TOOLS***
Time Pressure	**Effective Communication**
Distraction/Interruption	**Questioning Attitude**
Multiple Tasks	**Placekeeping**
Over Confidence	**Self Check**
Vague or Interpretive Guidance	**Peer Check**
First Shift/Last Shift	**Knowledge**
Peer Pressure	**Procedures**
Change/Off Normal	**Job Briefing**
Physical Environment	**Coaching**
Mental Stress (Home or Work)	**Turnover**

VERIFIED BY	DATE	TIME

FORM TITLE:	FORM NO.	CHANGE NO.
VERIFICATION COVER SHEET	**1000.006A**	**054**

14.0 Relieving EFW Pump Steam Bind

NOTE

- Events have occurred at other facilities where backleakage from hot feedwater systems has resulted in inoperable EFW pumps due to steam binding. The configuration of the EFW system at ANO makes the condition unlikely, however, this section of the procedure provides instructions for relieving this condition should it occur. Steam binding may be detected through rising EFW discharge pipe temperature, surveillances, or a failure of the pump to develop a discharge pressure when started.
- Steam binding renders affected EFW pump inoperable.

14.1 Perform the following to relieve steam binding of an EFW Pump (P-7A OR P-7B):

14.1.1 IF P-7A OR P-7B is running, THEN secure pump.

14.1.2 Determine which EFW line has backleakage by checking temperature by touch at each EFW line at the penetrations.

NOTE

- EFW piping temperatures of >150°F may place the EFW piping in an unanalyzed condition. The affected EFW pump may be inoperable. A Condition Report should be initiated to determine operability.
- EFW piping temperature of >240°F at Reactor Building penetration may place the penetration in an unanalyzed condition. A Condition Report should be initiated to determine operability.

14.1.3 Using a pyrometer, obtain temperatures at the following locations:

A. Locally at the penetrations.

B. The affected pump casing.

C. The affected pump discharge piping.

{4.3.2}

NOTE

- **The EFW Isolation valves are gate valves which are susceptible to thermal binding. If a valve is closed hot, and then cooled down, it may bind during future attempts to open. This could place an unanalyzed load on the valve and its operation could become degraded. For this reason, a Condition Report and an engineering evaluation will be required prior to returning the system, train, or path, to operable status.**
- **Refer to "Operability" section, EFW Isolation Valve paragraph.**

14.1.4 Close the EFW isolation to the SGs for the affected pump:

- EFW P-7A to SG-B Isol (CV-2620)
- EFW P-7B to SG-B Isol (CV-2626)
- EFW P-7A to SG-A Isol (CV-2627)
- EFW P-7B to SG-A Isol (CV-2670)

14.1.5 Shift minimum recirc flow for affected EFW pump discharge to flume by slowly opening applicable valve:

- P-7A Mini Recirc Disch to Flume Isol (FW-12A)
- P-7B Mini Recirc Disch to Flume Isol (FW-12B)

14.1.6 Isolate minimum recirc flow for affected EFW pump discharge to CST by unlocking and closing applicable valve:

- P-7A Minimum Recirc to CST (FW-11A)
- P-7B Minimum Recirc to CST (FW-11B)

A. Make appropriate entry on Category E/Locked Component Log (E-DOC 1015.001H).

14.1.7 While monitoring EFW CST T-41B level, gravity flow cold water from CST through EFW pump via minimum recirc to flume until the temperature difference between pump casing and fluid being pumped is <100°F, as measured by pyrometer.

14.1.8 Open and lock the aligned minimum recirc discharge to CST:

- FW-11A
- FW-11B

A. Perform required independent verification AND enter on Category E/Locked Component Log (E-DOC 1015.001H).

14.1.9 Close the aligned minimum recirc discharge to flume:

- FW-12A
- FW-12B

{4.3.2}

14.1.10 Contact Engineering to perform an analysis on the EFW Isolation gate valve(s) that will be stroked in the following process.

CAUTION

Affected EFW pump should not be operated with a temperature difference of >100°F between pump casing and fluid being pumped.

14.1.11 Start the affected EFW pump per applicable portions of Supplements 2, 11 or 12 of this procedure.

14.1.12 Cycle the EFW Isolation valve for the affected EFW pipe that had indications of backleakage:

- EFW P-7A to SG-B Isol (CV-2620)
- EFW P-7B to SG-B Isol (CV-2626)
- EFW P-7A to SG-A Isol (CV-2627)
- EFW P-7B to SG-A Isol (CV-2670)

14.1.13 Verify affected check valve seats.

A. IF check valve seats,
THEN secure the affected EFW pump.

B. IF check valve does NOT seat,
THEN leave EFW pump in service recircing to CST
AND consult with Operations Manager.

S10. Instrumentation

N

K/A 012 A2.06

A1JPM-RO-RPS06
Remove power from CRD system due to D RPS channel trip relay failure

RO/SRO

JOB PERFORMANCE MEASURE

Unit: 1 Rev # 0 Date: _____

JPM ID A1JPM-RO-RPS06

System/Duty Area: Reactor Protection System

Task: Remove Power from CRD System Due to "D" RPS channel trip relay failure.

JA# ANO1-RO-RPS-NORM-2

KA Value RO 4.4 SRO 4.7 KA Reference 012 A2.06

Approved For Administration To: RO X SRO X

Task Location: Inside CR: _____ Outside CR: X Both: _____

Suggested Testing Environment And Method (Perform Or Simulate #):

Plant Site: Simulate Simulator#: _____ Lab: _____

Position Evaluated: RO: X SRO: X

Actual Testing Environment: Simulator #: _____ Plant Site: X Lab _____

Testing Method: Simulate: X Perform: _____

Approximate Completion Time In Minutes: 15 Minutes

Reference(S): 1105.001 NI & RPS OPERATING PROCEDURE

Examinee's Name: _____ SSN: _____

Evaluator's Name: _____

The Examinee's performance was evaluated against the standards contained in this JPM and is determined to be:

Satisfactory: _____ Unsatisfactory: _____

Performance Checklist Comments:

Start Time _____ Stop Time _____ Total Time _____

Signed # _____ Date: _____

SIGNATURE INDICATES THIS JPM HAS BEEN COMPARED TO ITS APPLICABLE PROCEDURE BY A QUALIFIED INDIVIDUAL (NOT THE EXAMINEE) AND IS CURRENT WITH THAT REVISION.

JPM ID: A1JPM-RO-RPS06

THE EXAMINER SHALL REVIEW THE FOLLOWING WITH THE EXAMINEE:

The examiner shall review the "Briefing Checklist - System Walkthrough" portion of OP 1064.023 Attachment 6 with the examinee.

JPM INITIAL TASK CONDITIONS: **The plant is at 100% power. "D" RPS Reactor Trip Module will not trip its output devices.**

TASK STANDARD: **Power removed from the DC Hold and SCR Gating Circuits associated with "D" RPS channel.**

.

TASK PERFORMANCE: **1105.001** **NI & RPS OPERATING PROCEDURE STEP 12.0**

JPM ID: A1JPM-RO-RPS06

INITIATING CUE: The CRS directs you to remove power from the DC hold and SCR gating circuits associated with "D" RPS channel; due to reactor trip module failure to trip from "D" RPS channel.

Critical Tasks Steps: 4,5, and 6

C	PERFORMANCE CHECKLIST	STANDARD	N/A	SAT	UN SAT
TRANSITION NOTE: The examinee should move to the Computer Room on the 404 elevation.					
	1. Verify "A" and "B" CRD AC Breaker closed. POSITIVE CUE: "A" and "B" CRD AC breakers closed..	At the CRD AC breaker cabinets, verified red "Closed" indication on the "A" and "B" CRD AC breakers.	____	____	____
	2. Verify all four CRD DC Breakers closed (DC #1, #2, #3 and#4). POSITIVE CUE: CRD DC Breakers DC#1, DC#2, DC#3, and DC#4 are closed.	At the CRD DC breaker cabinets, verified red "Closed" indication on CRD DC breakers DC#1, DC#2, DC#3, and DC#4.	____	____	____
	3. Verify at least 2 Gate Drives energized in each regulating and auxiliary power supply cabinet (total of 10 cabinets). POSITIVE CUE: 2 red LEDs are illuminated in each of the listed cabinets..	Observed red LED illuminated on at least 2 Gate Drives in regulating cabinets: ____ C72 ____ C67 ____ C73 ____ C68 ____ C64 ____ C69 ____ C65 ____ C70 ____ C66 ____ C71	____	____	____
C	4. Trip CRD breakers DC#3. POSITIVE CUE: CRD DC breaker DC#3 is open.	In CRD System DC Breaker Cabinet C-53, depressed manual TRIP button for breaker DC #3.	____	____	____
C	5. Trip CRD breakers DC#4. POSITIVE CUE: CRD DC breaker DC#4 is open.	In CRD System DC Breaker Cabinet C-53, depressed manual TRIP button for breaker DC #4.	____	____	____

C	PERFORMANCE CHECKLIST	STANDARD	N/A	SAT	UN SAT
C	6. De-energize the gate drives associated with the "D" RPS cabinet POSITIVE CUE: 120V ABT (F-3) fuse in cabinets C-72, C-64, C-66, and C-68 are removed. NEGATIVE CUE: CRD system power associated with "D" RPS cabinet is not removed.	De-energized the gate drives by pulling the Programmer Control Assembly 120V ABT (F-3) fuse in cabinets: • CRD System Aux Supply A (C-72) • CRD System Group 5 Regulating Supply A (C-64) • CRD System Group 6 Regulating Supply A (C-66) • CRD System Group 7 Regulating Supply A (C-68)	____	____	____

END

AA
B

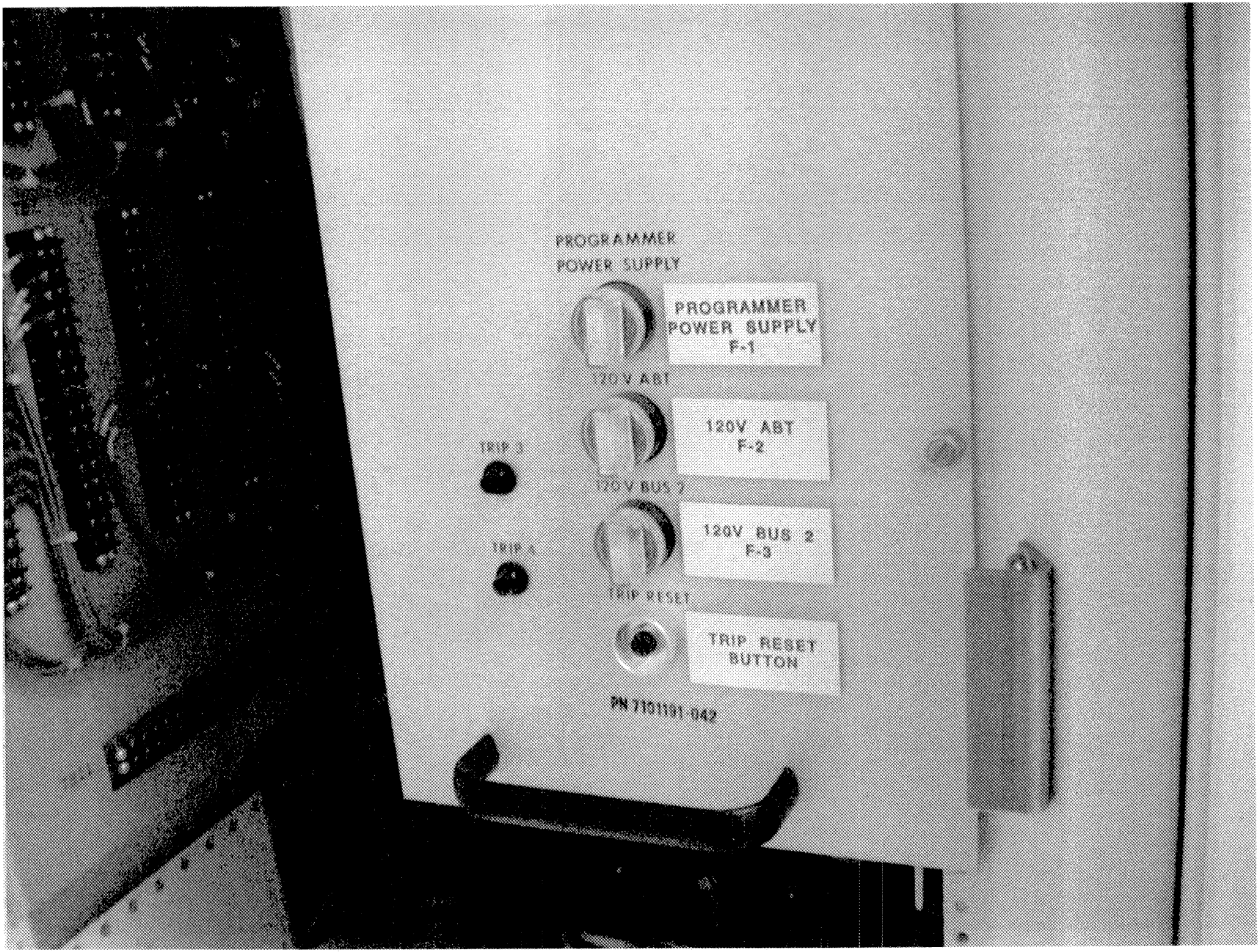
PROGRAMMER
POWER SUPPLY
PROGRAMMER
POWER SUPPLY
F-1
120 V ABT
120V ABT
F-2
TRIP 3
120 V BUS 2
120V BUS 2
F-3
TRIP 1
TRIP RESET
TRIP RESET
BUTTON
PN 7101191-042

JPM NUMBER: A1JPM-RO-RPS06

INITIAL CONDITIONS:

The plant is at 100% power. "D" RPS Reactor Trip Module will not trip its output devices.

INITIATING CUE:

The CRS directs you to remove power from the DC hold and SCR gating circuits associated with "D" RPS channel; due to reactor trip module failure to trip from "D" RPS channel.
Per procedure 1105.001 NI &RPS OPERATING PROCEDURE step 12.0

ENTERGY OPERATIONS INCORPORATED
ARKANSAS NUCLEAR ONE

TITLE: **NI & RPS OPERATING PROCEDURE**	DOCUMENT NO. **1105.001**	CHANGE NO. **023**
	WORK PLAN EXP. DATE **N/A**	TC EXP. DATE **N/A**
SET #	SAFETY-RELATED ☒YES ☐NO	IPTE ☐YES ☒NO
	TEMP ALT ☐YES ☒NO	LEVEL OF USE ☒ CONTINUOUS ☐ REFERENCE ☐ INFORMATIONAL
	PROGRAMMATIC EXCLUSION PER EN-LI-100 ☐YES ☒NO	

When you see these ***TRAPS***	Get these ***TOOLS***
Time Pressure	**Effective Communication**
Distraction/Interruption	**Questioning Attitude**
Multiple Tasks	**Placekeeping**
Over Confidence	**Self Check**
Vague or Interpretive Guidance	**Peer Check**
First Shift/Last Shift	**Knowledge**
Peer Pressure	**Procedures**
Change/Off Normal	**Job Briefing**
Physical Environment	**Coaching**
Mental Stress (Home or Work)	**Turnover**

VERIFIED BY	DATE	TIME

FORM TITLE:	FORM NO.	CHANGE NO.
VERIFICATION COVER SHEET	**1000.006A**	**053**

12.0 Removing Power From a Portion of the CRD System Due to a RPS Channel or RPS Trip Device Failure:

NOTE

- The Gate Drives are located in the upper section of each of the regulating and auxiliary power supply cabinets (C72, C73, C64, C65, C66, C67, C68, C69, C70 and C71); representing Group 5, 6, 7, 8 and the aux power supply).
- There are 6 gate drives in each regulating and auxiliary power supply cabinet, each representing a phase of CRD power.
- A red LED (LED1) on each of the Gate Drives indicates that the Gate Drive is energized. A minimum of 2 Gate Drives energized in each regulating and auxiliary power supply cabinets indicates the electronic trips are NOT tripped.

12.1 Verify CRD System does not have any tripped trip devices by performing the following:

12.1.1 Verify "A" and "B" CRD AC Breaker closed.

12.1.2 Verify all four CRD DC Breakers closed (DC #1, #2, #3 and #4).

12.1.3 Verify at least 2 Gate Drives energized in each regulating and auxiliary power supply cabinet (total of 10 cabinets).

____	C72	____	C67
____	C73	____	C68
____	C64	____	C69
____	C65	____	C70
____	C66	____	C71

NOTE

- Failure of either the undervoltage or shunt trip device in an CRD trip breaker requires entering TS 3.3.4 Condition A.
- Failure of CRD trip breaker for reasons other than loss of either undervoltage or shunt trip device requires performance of TS 3.3.4 Condition B actions within 1 hour.
- One inoperable Reactor Protection System Reactor Trip Module requires performance of actions associated with applicable TS 3.3.4 Condition(s) within 1 hour.

12.2 IF desired to open "A" CRD AC breaker associated with "A" RPS channel, THEN perform the following at AC Breaker Cabinet (C-49):

12.2.1 Depress "A" AC Breaker manual TRIP button.

12.3 IF desired to open "B" CRD AC breaker associated with "B" RPS channel, THEN perform the following at AC Breaker Cabinet (C-49):

12.3.1 Depress "B" AC Breaker manual TRIP button.

12.4 IF desired to remove power from the DC Hold and SCR Gating Circuits associated with "C" RPS channel, THEN perform the following:

NOTE

DC#1 and DC#2 are located in the right hand side of CRD System DC Breaker Cabinet (C-53).

12.4.1 Depress manual TRIP button for the following breakers:

A. DC#1
B. DC#2

NOTE

- De-energizing the Programmer Control Assembly is not required for a DC breaker failure.
- With one or more electronic trip relays inoperable, performance of TS 3.3.4 Condition C action is required within one hour.
- Per TS 3.3.4 bases, the electronic trip relays associated with Group 8 are not required to be operable.

12.4.2 IF desired, THEN in the following cabinets, pull the Programmer Control Assembly 120V ABT (F-2) fuse.

- CRD System Aux Supply A (C-72)
- CRD System Group 5 Regulating Supply A (C-64)
- CRD System Group 6 Regulating Supply A (C-66)
- CRD System Group 7 Regulating Supply A (C-68)

12.5 IF desired to remove power from the DC Hold and SCR Gating Circuits associated with "D" RPS channel, THEN perform the following:

NOTE

DC#3 and DC#4 are located in the left hand side of CRD System DC Breaker Cabinet (C-53).

12.5.1 Depress manual TRIP button for the following breakers:

A. DC#3
B. DC#4

NOTE

- De-energizing the Programmer Control Assembly is NOT required for a DC breaker failure.
- Failure of either the undervoltage or shunt trip device in an CRD trip breaker requires entering TS 3.3.4 Condition A.
- Failure of CRD trip breaker for reasons other than loss of either undervoltage or shunt trip device requires performance of TS 3.3.4 Condition B actions within 1 hour.
- Per TS 3.3.4 Bases, the electronic trip relays associated with Group 8 are not required to be tripped.

12.5.2 IF desired,
THEN in the following cabinets, pull the Programmer Control Assembly 120V BUS 2 (F-3) fuse.

- CRD System Aux Supply A (C-72)
- CRD System Group 5 Regulating Supply A (C-64)
- CRD System Group 6 Regulating Supply A (C-66)
- CRD System Group 7 Regulating Supply A (C-68)

13.0 Placing a Channel in a Tripped Condition in Support of NI Calibration, Channel Maintenance or Channel Calibration When One Channel is Inoperable

CAUTION

Tripping an RPS channel with one channel already tripped will cause a reactor trip.

NOTE

- The Reactor Trip module Test Trip lamp will illuminate bright while the top Test switch on the Building Pressure Contact Buffer is depressed.
- SRO Peer Check is required for all action steps contained in this section.

13.1 Verify no RPS channel tripped.

13.2 Verify channel that is to be tripped is NOT in Manual Bypass.

13.3 For channel selected to be tripped, momentarily depress the top Test switch on the Building Pressure Contact Buffer.

S11. Radioactivity Release

D/P/R

K/A 071 A4.26

A1JPM-RO-GRW01
Waste Gas tank release

RO only

TUOI NUMBER: ANO-1-JPM-RO-GRW01

.JOB PERFORMANCE MEASURE

Unit: 1 Rev # 1 Date: _____

TUOI NUMBER: ANO-1-JPM-RO-GRW01

System/Duty Area: Gaseous Radwaste / Radioactivity Release

Task: Commence Waste Gas Decay Tank Release

JA# ANO1-WCO-GZ01-NORM-11

KA Value RO 3.1 SRO 3.9 KA Reference 071 A4.26

Approved For Administration To: RO ☒ SRO ☒

Task Location: Inside CR: ☐ Outside CR: ☒ Both: ☐

Suggested Testing Environment And Method (Perform Or Simulate #):

Plant Site: Simulate Simulator#: _____ Lab: _____

Position Evaluated: RO: _____ SRO: _____

Actual Testing Environment: Simulator #: _____ Plant Site: X Lab _____

Testing Method: Simulate: X Perform: _____

Approximate Completion Time In Minutes: 15 Minutes

Reference(S): 1104.022, Chg. 034-00-0, Att. C

Examinee's Name: _____ SSN: _____

Evaluator's Name: _____

The Examinee's performance was evaluated against the standards contained in this JPM and is determined to be:
Satisfactory: _____ Unsatisfactory: _____

Performance Checklist Comments:

Start Time _____ Stop Time _____ Total Time _____

Signed # _____ Date: _____
TQ-202 attachment 9 is complete and on file for performance of this JPM for the current Reactor core configuration.
Signature indicates this JPM has been compared to its applicable procedure by a qualified individual (not the examinee) and is current with that revision.

TUOI NUMBER: ANO-1-JPM-RO-GRW01

THE EXAMINER SHALL REVIEW THE FOLLOWING WITH THE EXAMINEE:

The examiner shall review the "Briefing Checklist - System Walkthrough" portion of OP 1064.023 Attachment 6 with the examinee.

JPM INITIAL TASK CONDITIONS:

The Shift Chemist has returned Gaseous Release Permit 1GW-2008-002 to the Control Room for T-18A Waste Gas Decay Tank.

TASK STANDARD:

Release commenced per 1104.022, Att. C, at flow rate specified.

TASK PERFORMANCE AIDS: 1104.022, Att. C

TUOI NUMBER: ANO-1-JPM-RO-GRW01

INITIATING CUE: The CRS directs you to commence T-18A release beginning with step 4.3.2 of 1104.022, Att. C.

CRITICAL ELEMENTS (c): 1, 3. 6

C	PERFORMANCE CHECKLIST	STANDARD	N/A	SAT	UN SAT
C	1. Open T-18A outlet valve. POSITIVE CUE: GZ-13A open and verified by second operator.	Operator opened T-18A outlet valve, GZ-13A.	___	___	___
	2. Verify other decay tank outlet isolations closed. POSITIVE CUE: GZ-13B/C/D closed.	Operator verified outlet valves GZ-13B/C/D closed.	___	___	___
C	3. Open CV-4820 outlet isolation GZ-15. POSITIVE CUE: GZ-15 is open. **NOTE**: At time of validation a hold card was hanging on GZ-15, inform the examinee that the hold card is not part of this JPM and should be ignored.	Operator opened CV-4820 outlet isolation GZ-15.	___	___	___
	TRANSITION NOTE: **The examinee should proceed to the 354' elevation.**				
	4. Notify control room of intent to begin release. POSITIVE CUE: Control Room notified.	Operator contacted control room and informed them of intent to begin release.	___	___	___
	5. Record release data. POSITIVE CUE: Data recorded and chart recorders marked.	Operator recorded in Att. C Release number, start time, date and tank being released and marked chart recorders with same information. Operator will contact control room and have them mark RR-4830.			
C	6. Open discharge header flow control valve. NEGATIVE CUE: Inform the examinee that the initial flow rate is greater than the allowed flow rate on the preliminary report. If negative cue provided then the examinee should adjust the flow controller for CV-4820 to throttle the valve closed and reduce the flow rate. POSITIVE CUE: CV-4820 opened and data recorded	Operator opened CV-4820 and established release flow rate listed on preliminary report.			

TUOI NUMBER: ANO-1-JPM-RO-GRW01

C	PERFORMANCE CHECKLIST	STANDARD	N/A	SAT	UN SAT
EXAMINER NOTE: **Remaining steps are continuous action steps until release is complete.**					

END

TUOI NUMBER: ANO-1-JPM-RO-GRW01

INITIAL CONDITIONS:
The Shift Chemist has returned Gaseous Release Permit 1GW-2007-002 to the Control Room for T-18A Waste Gas Decay Tank.

A Pre-Job brief has been conducted and a second operator is available for verification of reach rod operated valves.

INITIATING CUE:
The CRS directs you to commence T-18A release beginning with step 4.3.2 of 1104.022, Att. C.

ENTERGY OPERATIONS INCORPORATED
ARKANSAS NUCLEAR ONE

TITLE: **GASEOUS RADWASTE SYSTEM**	DOCUMENT NO. **1104.022**	CHANGE NO. **034-00-0**
	WORK PLAN EXP. DATE **N/A**	TC EXP. DATE **N/A**
SET #	SAFETY-RELATED ☒YES ☐NO	IPTE ☐YES ☒NO
	TEMP ALT ☐YES ☒NO	
	PROGRAMMATIC EXCLUSION PER EN-LI-100 ☐YES ☒NO	

When you see these *TRAPS*	**Get these *TOOLS***
Time Pressure	**Effective Communication**
Distraction/Interruption	**Questioning Attitude**
Multiple Tasks	**Placekeeping**
Over Confidence	**Self Check**
Vague or Interpretive Guidance	**Peer Check**
First Shift/Last Shift	**Knowledge**
Peer Pressure	**Procedures**
Change/Off Normal	**Job Briefing**
Physical Environment	**Coaching**
Mental Stress (Home or Work)	**Turnover**

VERIFIED BY	DATE	TIME

FORM TITLE:	FORM NO.	CHANGE NO.
VERIFICATION COVER SHEET	1000.006A	052-00-0

ATTACHMENT C

GASEOUS RELEASE PERMIT

PERMIT # 1GW2008-02 (Assigned by Chemistry) 9-4-2008 Date

INITIALS

1.0 REQUEST (Operations)

1.1 Waste Gas Decay Tank (circle one): DMT

T-18A T-18B T-18C T-18D

1.2 Initial tank pressure 85 psig. DMT

DMT

NOTE

If plant and tank conditions permit, short-lived gaseous activity should be held for a minimum of 30 days to allow for decay.

1.3 Ensure tags have been hung on tank to be released per "Waste Gas Decay Tanks (T18A thru D)" section of this procedure. DMT

Date tags hung: 6/18/2008

Duration tags hung: 78 days

1.4 IF short-lived gaseous activity is present, THEN perform one of the following:

Hold tank contents for a minimum of 30 days. DMT

Explain why tank contents must be released in <30 days. N/A

N/A

1.5 Check Gaseous Radwaste Process Monitor (RI-4830) available by one of the following methods (ODCM App.1, 2.2-2.1.a):

1.5.1 IF monitor count rate is ≤1000 cpm, THEN select CHECK SOURCE on RI-4830 and verify that the monitor responds to check source with a count rate rise >100 cpm. N/A

1.5.2 IF monitor count rate >1000 cpm, THEN verify that count rate is <8.9E6. DMT

1.5.3 IF neither 1.5.1 nor 1.5.2 can be satisfied, THEN RI-4830 shall be considered unavailable for this release. N/A

ATTACHMENT C

1.6 Shift Manager/CRS Approval Abel Leader
SM/CRS

1.7 Submitted to Chemistry for analysis
by: [illegible] Date 9/4/2006 Time 0430

2.0 ANALYSIS (Chemistry)

2.1 Sample of tank T-18A for gamma spectroscopy obtained
by: Janice Chemistry.

2.1.1 Record M&TE number CRO-026
Cal Expiration Date 12-21-08

NOTE
If an independent sample and analysis is needed per step 2.4, independent sampling and analysis may be performed concurrently with the following steps.

2.2 Gamma spectroscopy performed by: Janice Chemistry

2.3 Gamma spectroscopy report reviewed by: Mike Proch

2.4 IF Gaseous Radwaste (RI-4830) is inoperable
OR is unavailable (per steps 1.5 or 3.5.1),
THEN perform the following:
OTHERWISE mark 2.4.1 and 2.4.2 N/A. (ODCM App.1, Table 2.2-1)

2.4.1 An independent sample shall be obtained and analyzed. Independent sample and analysis performed by:
N/A Date N/A

2.4.2 An independent verification of computer input data shall be performed. Independent verification performed by:
N/A Date N/A

2.5 Preliminary release report generated by: Janice Chemistry

2.6 Tank pressure at which release is to be terminated Ø psig
by: Janice Chemistry.

2.7 SPING 2 setpoint value(s) adjusted per 1604.051 and Form 1604.051E
by: Janice Chemistry.

2.8 Preliminary report returned to operations
by: Janice Chemistry Date 9/4/2006 Time 0700

ATTACHMENT C

3.0 VERIFICATION OF TECH SPEC COMMITMENTS (Operations)

3.1 Verify Waste Gas Decay Tank circled in step 1.1 is the same tank as:

- Tank that was sampled in step 2.1 and — DMT
- Same tank as listed on preliminary report. — DMT

3.1.1 Verify appropriate signature on preliminary report. — DMT

3.2 Verify no other gaseous release in progress. — DMT

3.3 Verify Radwaste Area Exhaust Fan (VEF-8A or VEF-8B) running (circle one). — DMT

3.4 Verify SPING 2 Radwaste Area (RX-9825) status is "Normal" on RDACS (ODCM App. 1, 2.2-2.2.a, b, and c). — DMT

3.5 IF Gaseous Radwaste (RI-4830) is operable AND is available, THEN verify proper operation of the associated interlocks and the Gaseous Waste DISCH Flow (FR-4831) as follows: (ODCM App.1, Table 2.2-1). OTHERWISE mark step 3.5 N/A and GO TO step 3.6. — DMT

3.5.1 Check Gaseous Radwaste Process Monitor (RI-4830) available by one of the following methods (ODCM App.1, 2.2-2.1.a):

A. IF monitor count rate is ≤1000 cpm, THEN select CHECK SOURCE on RI-4830 AND verify that the monitor responds to check source with a count rate rise >100 cpm. — N/A

B. IF monitor count rate >1000 cpm, THEN verify that count rate is <8.9E6. — DMT

N/A IF neither A nor B above can be satisfied, THEN RI-4830 shall be considered unavailable AND N/A the remainder of this step. — N/A

3.5.2 Verify tank outlet valves closed:

- T-18A Outlet Isolation (GZ-13A) — DMT
- T-18B Outlet Isolation (GZ-13B) — DMT
- T-18C Outlet Isolation (GZ-13C) — DMT
- T-18D Outlet Isolation (GZ-13D) — DMT

3.5.3 Verify Station Vent Discharge Valve (CV-4830) open. — DMT

3.5.4 Verify FR-4831 indicates system flow from T-17 purge. — DMT

ATTACHMENT C

3.5.5 Open T-18s Discharge to Gaseous Radwaste Discharge Header Flow Control Valve (CV-4820). DMT

3.5.6 Verify ABVH Diversion to T-17 (CV-4806) closed. DMT

3.5.7 Place RI-4830 in CHECK SOURCE. DMT

N/A IF necessary, THEN lower alarm setpoint until high alarm is received. N/A

3.5.8 Verify Gaseous Radwaste Disch Isol (CV-4830) closes. DMT

3.5.9 Verify CV-4820 closes. DMT

A. Lower HIC-4820 to ~ 0% open. DMT

3.5.10 Verify CV-4806 opens. DMT

3.5.11 Verify system flow on FR-4831 is ~0. DMT

3.5.12 Verify appropriate alarms on control panels.

- WASTE GAS DISCHARGE LINE RAD HI (K115-B5) DMT
- Gaseous Radwaste Monitor (RI-4830) alarm DMT
- PROCESS MONITORS HIGH RAD (K10-B2) DMT
- RADWASTE GAS PANEL TROUBLE (K09-D5) DMT

3.5.13 Reset RI-4830. DMT

3.5.14 Open CV-4830. DMT

3.5.15 Verify system flow on FR-4831 indicates purge flow. DMT

3.5.16 Close CV-4806. DMT

3.5.17 Clear alarms. DMT

3.6 IF RI-4830 is inoperable, OR is unavailable, THEN perform the following:

N/A 3.6.1 Open CV-4830. N/A

N/A 3.6.2 Close CV-4806. N/A

N/A 3.6.3 Verify step 2.4 has been performed. N/A

ATTACHMENT C

3.7 Shift Manager/CRS approval to proceed with release:

AL SM

NOTE
Simultaneous radioactive gaseous releases are not permitted.

Abel Leader _____ SM/CRS Unit 1

Nathan Shifty _____ SM/CRS Unit 2

4.0 RELEASE (Operations)

4.1 IF Gaseous Radwaste (RI-4830) is operable AND is available, THEN perform the following:

4.1.1 Record RI-4830 pre-release, as-found setpoint: 2.8E3 cpm. ont

4.1.2 Record Setpoint from preliminary report: Setpoint: 3.4E5 cpm ont

4.1.3 IF setpoint from preliminary report is <50,000 cpm, THEN 50,000 cpm should be used as this release setpoint. N/A

4.1.4 Adjust setpoint to 3.4E5 cpm (from preliminary report, or 50,000 cpm, whichever is greater). ont

A. Licensed Operator, other than individual who initially set RI-4830 setpoint independently verify correct RI-4830 setpoint from preliminary report.

Independent verification by _____

4.2 Verify T-18s Discharge to Gaseous Radwaste Discharge Header Flow Control Valve (CV-4820) closed. ont

4.3 Align T-18 for release as follows:

4.3.1 Remove tag on the T-18 outlet valve. ont

NOTE

The following step can cause the alarm "T-18 DISCHARGE LINE PRESSURE HIGH" and is expected for this alignment. Alarm should clear when release starts.

4.3.2 Open the outlet valve of the tank to be released. Check the (✓) valve that is opened. _____

( ) T-18A Outlet Isolation (GZ-13A)
( ) T-18B Outlet Isolation (GZ-13B)
( ) T-18C Outlet Isolation (GZ-13C)
( ) T-18D Outlet Isolation (GZ-13D)

4.3.3 Verify other outlet isolations closed. _____

4.3.4 IF Gaseous Radwaste (RI-4830) is inoperable OR is unavailable, THEN perform independent verification of step 4.3 (ODCM App.1, Table 2.2-1).

Independent verification _____

4.4 Open CV-4820 Outlet Isol (GZ-15). _____

4.5 Notify control room of intent to begin release. _____

4.6 Record the following data:

- Release Permit Number _____
- Release Start Time _____
- Date _____
- Tank being released _____

4.6.1 Mark the same data on the following recorders:

- Gaseous Waste DISCH Flow (FR-4831) _____
- Process Radiation Monitoring Effluent Recorder (RR-4830) _____

NOTE

If "T-18 DISCHARGE LINE PRESSURE HIGH" alarm is present, then HS-4820 must be held in the open position while operating HIC-4820. When alarm is clear, then HS-4820 may be released.

4.7 While monitoring FR-4831, slowly operate HIC-4820 to open CV-4820 and establish the release flow rate listed on the preliminary report: _____
≤ 10 cfm (ODCM App.1, 2.2-2.1.b).

4.8 IF CV-4830 trips closed during release due to high radiation, ←
THEN this release shall be terminated per Waste Gas Discharge Line Radiation High (1203.006).

NOTE

An empty and isolated T-18 can pressurize during a release due to pressure in the discharge header leaking back through a discharge valve that is not gas tight. To ensure that the second T-18 was pressurized from the releasing tank it must meet the following criteria:

- Initial T-18 pressure was ~0 psig.
- Pressure rise began when release path aligned.
- No other venting or no Waste Gas Compressor operation was in progress.
- No other T-18 experienced a coincident pressure drop.

Under this condition the release may continue.

4.9 WHEN tank pressure is ~ _____psig (value listed in step 2.6 of this attachment),
THEN terminate release as follows:

4.9.1 Close CV-4820. _____

4.9.2 Verify flow rate on FR-4831 drops to the approximate flow setup for T-17 purge. _____

4.9.3 Close CV-4820 Outlet Isol (GZ-15). _____

4.10 Notify control room that release is complete. _____

4.11 Record the following data: _____

- Time release completed _____
- Date _____
- Release permit number _____

4.11.1 Mark same data on the following recorders:

- FR-4831 _____
- RR-4830 _____

ATTACHMENT C

4.12 Close outlet valve of tank that was released. Check (✓) the valve that is closed: _____

( ) GZ-13A
( ) GZ-13B
( ) GZ-13C
( ) GZ-13D

4.13 Remove tag from inlet valve of tank that was released. _____

4.14 Record final tank pressure _____psig. _____

4.15 Pressurize tank released to ~2 psig with N_2 as follows:

4.15.1 Place N_2 to T-18s regulator (PCV-4805) into service as follows:

A. Open the following valves:

- PCV-4805 Inlet Valve (N_2-4805-1) _____
- PCV-4805 Outlet Valve (N_2-4805-2) _____

B. Set PCV-4805 at ~15-18 psig. _____

4.15.2 Momentarily open N_2 supply to tank. Check (✓) the valve that is opened: _____

( ) T-18A N_2 Inlet Isol (N_2-15)
( ) T-18B N_2 Inlet Isol (N_2-16)
( ) T-18C N_2 Inlet Isol (N_2-17)
( ) T-18D N_2 Inlet Isol (N_2-18)

A. Close the T-18 N_2 Inlet Isol opened above. _____

4.15.3 IF nitrogen to T-18s is no longer required, THEN close the following valves:

- PCV-4805 Inlet Valve (N_2-4805-1) _____
- PCV-4805 Outlet Valve (N_2-4805-2) _____

ATTACHMENT C

4.16 Purge and restore RE-4830 as follows:

4.16.1 Raise Waste Gas Surge Tank (T-17) pressure to greater than atmospheric but below 16.9 psia to avoid start of Waste Gas Compressor (C-9A or C-9B) by slightly opening PCV-4812 Bypass Valve (N_2-4812-3). _____

4.16.2 IF RE-4830 was operable for this release AND RE-4830 has been purged to minimum reading, THEN perform one of the following:

- Adjust alarm setpoint to the as-found setpoint recorded previously for this release, or _____
- Adjust to new setpoint by performing Radiation Monitoring System Check and Test (1305.001) Supplement 5 for RI-4830. _____

4.16.3 Verify N_2-4812-3 closed. _____

4.16.4 Check PCV-4812 maintains T-17 pressure greater than atmospheric pressure. _____

A. IF PCV-4812 does NOT maintain adequate T-17 pressure, THEN verify WR/WO initiated to check setpoint. _____

Performed by _____ Ops

Accepted by _____ SM/CRS

4.17 Permit and preliminary report returned to Chemistry for final analysis of data. _____

5.0 SPING Restoration (Chemistry)

5.1 Adjust SPING 2 setpoint per Form 1604.051E. _____

Chemistry Supervisor _____ Date _____

Facility: ANO-1 Scenario No.: 1-R2 Op-Test No.: 2008-1

Examiners: _____ Operators: _____
_____ _____
_____ _____

Initial Conditions:
80% power due to dispatcher direction for loss of 500KV.
C2A IA compressor is out of service for overhaul.
ULD is failed and will not lower power.
RPS is failed and will not initiate a RX trip.
Provide stop watch for surveillance.
Turnover:
Day shift normal working day.
80% power due to dispatcher direction for loss of 500KV line as a result of maintenance on the Mabelvale 500KV line.
C2A IA compressor is out of service for overhaul.
1104.005 Supplement 2 RB Spray Red Train Valves Quarterly Test is in progress complete through step 2.2.2. This is not the 18 month surveillance.
Crew will continue in surveillance after turnover.

Event No.	Malf. No.	Event Type*	Event Description
1	N/A	N (SRO, BOP)	Perform 1104.005 Supplement 2 RB Spray Red Train Valves Quarterly Test.
2	AI_FIC1207	I (SRO, ATC)	RCP total flow setpoint fails to high.
3	CV016	C (SRO, BOP)	RCP seal failure.
4	N/A	N (SRO) R (ATC)	Power reduction
5	DI_H24T	C (ALL)	Loss of H2 bus.
	CO_P32A	N/A	If power <55%, Trip 'A' RCP (Contingency to ensure RPS trip setpoint is reached.)
6	RP246,7,8,9	C (SRO, ATC) M (ALL)	RPS is failed Manual RX trip **(TS) (ATC-CT)**
7	CV020 RC006	C (SRO, BOP) M (ALL)	'B' RCP seal failure ~200gpm RCS leak **(TS) (BOP-CT)**

* (N)ormal, (R)eactivity, (I)nstrument, (C)omponent, (M)ajor

Scenario #1-R2 Objectives

1) Evaluate individual ability to perform the valve stroke test of the Engineered Safegaurds Reactor Building Spray Block Valve.
2) Evaluate individual ability to recognize and respond to a failed reactor coolant pump total seal injection flow controller setpoint.
3) Evaluate individual ability to recognize and respond a degraded reactor coolant pump seal.
4) Evaluate individual ability to perform a plant power reduction.
5) Evaluate individual ability to stop a running reactor coolant pump at power.
6) Evaluate individual ability to recognize and respond a loss of a 6900V H bus and resulting loss of a reactor coolant pump.
7) Evaluate individual ability to recognize and respond to a reactor trip condition where RPS fails to trip the reactor.
8) Evaluate individual ability to recognize and respond a post trip reactor coolant pump seal failure.
9) Evaluate individual ability to recognize and respond a reactor coolant system leak inside the reactor building.
10) Evaluate individual ability to recognize when conditions require the entry into technical specifications conditions.
11) Evaluate individual ability to recognize and respond to the need for high pressure injection as a result of increased reactor coolant system leakage.

SCENARIO #1-R2 NARRATIVE

The crew will assume the watch at 80% power. The Mayflower 500KV line is out of service due to storm related damage in south east Arkansas. The down power was completed 4 hours ago. Reactor engineering has directed that rods can be used to account for the xenon transient. There is a severe thunderstorm warning in effect for Pope and Yell counties for the next two hours. All Natural Emergency (1203.025) actions are complete for this notification.

1104.005 Supplement 2 RB Spray Red Train Valves Quarterly Test is complete through step 2.2.2. The crew should brief the remaining steps of the surveillance. The BOP will perform the stroke test **(BOP-N) (SRO-N).**

The controlling RCP total seal injection flow setpoint will fail high. **(ATC-I) (SRO-I)**. This will cause CV-1207 RCP Seal Injection Control Valve to fail open raising total seal injection flow to maximum. Annunciator K08-D7 RCP Seal Cavity Press HI/LO will alarm due to the high seal injection flow. The CRS should reference 1203.012G K08 Annunciator Corrective Action. The ACA will direct the CRS to 1203.031 Reactor Coolant Pump and Motor Emergency. The crew should recognize high seal injection flow on C04 and take manual control of CV-1207 to establish 8-10gpm individual seal injection flow.

The RCP seal injection transient will cause the ‘B’ RCP lower seal to fail **(BOP-C) (SRO-C)**. The CRS should implement 1203.031 Reactor Coolant Pump and Motor Emergency and reduce power to ~60% in order to stop the ‘B’ RCP using 1103.006 **(ATC-R) (SRO-N)**.

When the ‘B’ RCP is stopped a loss of the H2 bus will occur resulting in a loss of two RCP’s (B and D) **(BOP-C) (SRO-C) (ATC-C)**. If reactor power is <55% then the ‘A’ RCP will be tripped by the simulator instructor to create the condition for the recognition of an RPS failure. The ATC should recognize the reactor should have tripped and manually trip the reactor.
(ATC-C) (SRO-C) (ATC-CT) (ALL-M) (TS).
TS 3.3.1 Condition C
CT criteria - The reactor should be manually tripped within 2 minutes of the loss of the H2 bus.

~5 minutes post trip a ~300gpm leak will occur in the reactor building from the failed RCP seal **(SRO-C) (BOP-C) (ALL-M) (TS)**. The crew should recognize the leak and the BOP should initiate HPI per RT-2 to maintain RCS inventory pressure and subcooling margin **(BOP-CT)**.
TS 3.4.13 Condition A
CT criteria - **HPI should be started before the ESAS actuates on low RCS pressure.**

Simulator Instructions for Scenario 1-R2				
Event No.	Time	Malf. No.	Value/ Ramp Time	Event Description
Recall IC **To be established during validation** IMF RP246,7,8,9				
1	0	N/A	N/A	Perform remaining steps of 1104.005 Supplement 2 RB Spray Red Train Valves Quarterly Test.
2	12	IOR AI_FIC1207	1.0	RCP total flow setpoint fails high. This will result CV-1207 Seal Injection control valve traveling full open.
3	Seal Inj. 8-10 gpm	IMF CV016	N/A	RCP seal failure requiring power reduction and securing of the RCP.
4	As directed by SRO	N/A	N/A	Power reduction to ~60%
5	RCP Stopped Or 58% power	IMF ED184	N/A	Loss of H2 bus when RCP is secured.
	If power <55%	IOR DI_HS1022SP	True	Trip of 'A' RCP (Contingency to ensure RPS trip setpoint is reached.)
6	Initial	IMF RP246,7,8,9	N/A	RPS is failed requiring a manual RX trip on a loss of two RCP's >55% power **(TS) (ATC-CT) criteria - The reactor should be manually tripped within 2 minutes of the loss of the H2 bus.**
7	Rx trip +5 min	IMF CV020 IMF RC006	100 0.0016 120 200	'B' RCP seal failure ~300gpm RCS leak **(TS) (BOP-CT) criteria - HPI should be started before the ESAS actuates on low RCS pressure.**

Op-Test No.: 2008-1 Scenario No.: 1-R2 Event No.: 1

Event Description:
Perform remaining steps in 1104.005 Supplement 2 Red train Spray Valve Test.

Time	Position	Applicant's Actions or Behavior
0	BOP	Implement 1104.005 Supplement 2 step 2.2.2. **(BOP-N) (SRO-N)**
	BOP	Verify Makeup Tank pressure > 25 psig.
	BOP	Verify one of the following valves closed: • RB Sump Line A Outlet (CV-1405) or • RB Sump Line A Outlet (CV-1414)
	BOP	Open BWST T-3 Outlet (CV-1407)
	BOP	While timing stroke, open CV-2401 (modulating valve).
	BOP	Record stroke time in Table 1
	BOP	Close CV-2401 (modulating valve, hold control switch in CLOSE until valve torques closed). Verify closed indication.
	BOP	Record closed stroke in Table 1
	BOP	Close CV-1407
This event is complete when Supplement 2 is complete.		

Op-Test No.: 2008-1 Scenario No.: 1-R2 Event No.: 2

Event Description:
RCP total flow setpoint fails high. This will result CV-1207 Seal Injection control valve traveling full open.

Time	Position	Applicant's Actions or Behavior
12	ATC	Recognize, acknowledge, and report Annunciator K08-B7 RCP Bleedoff Flow HI **(ATC-I) (SRO-I)**
	CRS	Implement 1203.012G Annunciator K08 Corrective Action
	CRS	GO TO "Seal Degradation" section of Reactor Coolant Pump and Motor Emergencies (1203.031).
	BOP	Verify the following valves are open: • RCP Seal Bleed off (Normal) Return (CV-1274) • RCP Seal Bleed off (Normal) from P-32D (CV-1270) • RCP Seal Bleed off (Normal) from P-32C (CV-1271) • RCP Seal Bleed off (Normal) from P-32B (CV-1272) • RCP Seal Bleed off (Normal) from P-32A (CV-1273)
	ATC	Verify RCP Seal INJ Block (CV-1206) open.
	ATC	Manually adjust RC Pump Seals Total INJ Flow (CV-1207) to establish 32 to 40 gpm by verifying individual seal injection flow rates 8 to 10 gpm.
	CRS	Provide Attachment A of this procedure to a Control Board Operator to aid in monitoring seal parameters.
This event is complete when RCS seal injection flow is 8 to10 gpm.		

Op-Test No.: 2008-1 Scenario No.: 1-R2 Event No.: 3 & 4

Event Description:
RCP seal failure

Time	Position	Applicant's Actions or Behavior
RCP seal Inj. 8-10 gpm	BOP	Recognize and report 'B' RCP seal failure. **(BOP-C) (SRO-C)**
		Direct operations per 1203.012G K08 Annunciator Corrective Action And 1203.031 Reactor Coolant Pump and Motor Emergency
	ANY	Determine Seal bleed off temp >40°F above 1st stage seal temp.
	CRS	Implement Rapid Plant Shutdown (1203.045)
	ATC	Reduce reactor power to within the capacity of the unaffected RCP combination, using Rapid Plant Shutdown (1203.045)
	CRS	Direct power reduction using ULD
	ATC BOP	Lower plant power to <60% **(SRO-N) (ATC-R)**
This event is complete when plant power is <60%		

Op-Test No.: 2008-1 Scenario No.: 1-R2 Event No.: 5 & 6

Event Description:
Loss of H2 bus when RCP is secured.
RPS is failed requiring a manual RX trip on a loss of two RCP's >55% power.

Time	Position	Applicant's Actions or Behavior
	CRS	Direct BOP to stop the affected RCP(s) per Reactor Coolant Pump Operation (1103.006)
	ANY	IF time permits, THEN contact predictive maintenance to install backup indication of RCP zero speed prior to RCP stop.
	BOP	Start HP Oil Lift Pump (P-63B) OR Emergency HP Oil Lift Pump (P-80B)
	BOP	Stop P-32B.
	BOP	Verify HP Oil Lift Pump (P-63B) remains on.
	ANY	Monitor affected RCP for reverse rotation
	ANY	Recognize loss of H2 bus and two RCP's **(BOP-C) (SRO-C) (ATC-C)** Recognize RPS failed to complete an automatic trip. **(ATC-C) (SRO-C) (TS)** **TS 3.3.1 Condition C**
	CRS	Direct manual trip of the reactor and performance of immediate actions. (ATC may trip the reactor before the CRS direction.)
	ATC	Manually Trip Rx. **(ATC-CT) (BOP-M) (SRO-M) (ATC-M)** • Verify all rods inserted AND • Reactor power dropping. **CT criteria - The reactor should be manually tripped within 2 minutes of the loss of the H2 bus.**
	BOP	Manually trip Turbine. Verify Turbine throttle and governor valves closed.
	ATC or BOP	Check adequate SCM.
	CRS	Advise Shift Manager to implement Emergency Action Level Classification (1903.010).
	ATC	Reduce Letdown by closing Orifice Bypass (CV-1223).
	BOP	Open BWST Outlet to OP HPI pump (CV-1407 or 1408).
	BOP	Check for proper electrical response
	ANY	Check OP HPI pump supplying normal Makeup and Seal Injection.
	ATC	Check both SG levels remain 410".
	ANY	Check Instrument Air Header press 75 psig
	ANY	Check all NNI power available:
	ANY	Check all ICS power available:

EVENT 5 & 6 CONTINUED

Op-Test No.: 2008-1 Scenario No.: 1-R2 Event No.: 5 & 6 CONTINUED

Event Description:
Loss of H2 bus when RCP is secured.
RPS is failed requiring a manual RX trip on a loss of two RCP's >55% power.

Time	Position	Applicant's Actions or Behavior
	ATC	Check SG press 900 psig.
	ANY	Check MSSV OPEN alarm clear (K07-C5).
	ANY	Check MSIVs open.
	ANY	Check Turb BYP valves operate to maintain SG press 970 to 1020 psig.
	ANY	Place both Feedwater Demands in HAND AND verify demand at zero.
	ANY	Check Main Block valves closed (CV-2625 and 2675).
	ANY	Check Low Load Block valves closed (CV-2624 and 2674).
	ANY	Check Startup valves maintain SG levels 20 to 40".
	ANY	Verify MFW pumps run back and then operate to maintain 70 psid across Startup valves.
	ANY	Check the following in service: • Two Service Water pumps (P4A, B, or C). • ICW pump supplying Nuclear loop (P33C or B). • ICW pump supplying Non-nuclear loop (P33A or B). • RB Cooling Fans (VSF1A, B, C, D, and E) • Previously running Main Chiller(s) (VCH1A, B)
	ANY	Check ESAS Actuation alarms clear on K11.
	ANY	Check RCS press 1700 psig.
	ATC	Check Pressurizer Level Control valve (CV-1235) maintains PZR level 55".
	ANY	Check PZR steam space integrity.
	ATC	Verify ERV, Pressurizer Spray, and Pressurizer Heaters operate to ontrol RCS press 2050 to 2250 psig.
	ANY	Check at least one RCP running.
	ATC	Check RCS T-cold remains 540°F.
	ANY	Check adequate SCM.
	ATC	Check RCS temp remains either: • 580°F T-hot with any RCP on OR • 610°F CET temp with all RCPs off.
	BOP	Check SG tube integrity
	ANY	Check RCS integrity
This event is complete when the CRS leak is started.		

Op-Test No.: 2008-1 Scenario No.: 1-R2 Event No.: 7

Event Description:
An ~200gpm RCS leak will develop in the RX building requiring HPI.

Time	Position	Applicant's Actions or Behavior
Trip + 5 min	ANY	Recognize and report lower PZR level and RCS pressure
		Recognize and report additional seal failed on 'B' RCP **(BOP-C) (SRO-C)**
	ANY	Diagnose RCS leak inside containment **(BOP-M) (SRO-M) (ATC-M) (TS) TS 3.4.13 Condition A**
	ANY	Determine leak rate >50 gpm (EAL consideration)
	CRS	Direct implementation of HPI per Repetitive Tasks 1202.012 RT-2
	BOP	Isolate Letdown by closing either: • Letdown Coolers Outlet (CV-1221) OR • Letdown Cooler Outlets (CV-1214 and 1216)
	BOP	Open BWST Outlet to OP or STBY HPI pump (CV-1407 or 1408).
	ANY	Place or verify RCP Seal INJ Block (CV-1206) in OVRD.
	BOP	Open HPI Block valve associated with OP or STBY HPI pump (CV-1220 or 1285) to maintain PZR level and RCS press **(BOP-CT)** **CT criteria** - **HPI should be started before the ESAS actuates on low RCS pressure.**
	BOP	Open additional HPI Block valves associated with OP HPI pump
	BOP	IF PZR level or RCS press continues to drop, THEN place ES HPI pump in service
	BOP	Open BWST Outlet to ES HPI pump (CV-1407 or 1408).
	BOP	Verify both HPI RECIRC valves open (CV-1300 and 1301)
	BOP	Start AUX Lube Oil pump for ES HPI pump
	BOP	WHEN BWST Outlet is open, THEN start ES HPI pump
	BOP	Stop AUX Lube Oil pump
	BOP	Open HPI Block valve associated with ES HPI pump (CV-1220 or 1285) to maintain PZR level and RCS press (modulating valves).
	BOP	Open additional HPI Block valves associated with ES HPI pump:
This scenario may be terminated when HPI is initiated.		

Facility: ANO-1 Scenario No.: 2-R2 Op-Test No.: 2008-1

Examiners: _____ Operators: _____
_____ _____
_____ _____

Initial Conditions:
100% Power
EFIC is failed and will not auto actuate.
C2A IA compressor is out of service for overhaul.
Provide picture of RS-4
Turnover:
Day shift normal working day.
C2A IA compressor is out of service for overhaul.
Currently under a severe thunderstorm warning for the next hour. All actions of 1203.025 Natural Emergencies are complete.
Swap ICW pumps for normal pump rotation to have P33A, and P33B running. The Inside AO has been briefed and is standing by the ICW pumps. P33B had not been drained.

Event No.	Malf. No.	Event Type*	Event Description
1	N/A	N (SRO, BOP)	Swap operating ICW pumps
2	Lightning strike DI-DG2S K01A3	N/A	Lightning strike #2 EDG auto start #2 EDG Auto Start Command Annunciator
3	CV-3807	C (SRO, BOP)	#2 EDG SW valve fails to open **(TS).**
4	N/A	N (SRO) R (ATC)	Dispatcher directs a power reduction to 700Mwe in the next 15 minutes.
5	Lightning strike ED451	I (SRO, ATC)	Lightning strike Loss of the NNI Y power supply.
6	ED183	M (ALL)	Loss of Offsite Power/Degraded Power
7	DG175 DI_DG1_VR-LW	C (SRO, BOP)	#1 EDG will not auto start **(BOP-CT)** #1 EDG voltage low
8	FW621	C (ATC)	EFIC fails **(ATC-CT) (TS)**
9	DG173	C (ALL) M (ALL)	#1 EDG will trip **(TS)**
10	A901	N (SRO, BOP)	Alternate AC Generator available. **(BOP-CT)**

* (N)ormal, (R)eactivity, (I)nstrument, (C)omponent, (M)ajor

Scenario #2-R2 Objectives

1) Evaluate individual ability to perform the swapping of the operating ICW pumps.
2) Evaluate individual ability to recognize and respond to the false auto start of emergence diesel generator.
3) Evaluate individual ability to recognize and respond to the failure to open of the service water supply valve on an operating emergence diesel generator.
4) Evaluate individual ability to reduce plant power.
5) Evaluate individual ability to recognize and respond to the loss of the 'Y' Non-Nuclear Instrumentation system.
6) Evaluate individual ability to recognize and respond to a loss of offsite power.
7) Evaluate individual ability to recognize and respond to failure of the emergence diesel generator to auto start.
8) Evaluate individual ability to recognize and respond to the failure of the Emergency Feedwater Initiation and Control system to automatically actuate emergency feedwater.
9) Evaluate individual ability to recognize and respond to the tripping of the remaining emergence diesel generator putting the plant in a blackout condition.
10) Evaluate individual ability to perform the energizing of a vital bus from the alternate AC generator.
11) Evaluate individual ability to recognize when conditions require the entry into technical specifications conditions.

SCENARIO #2-R2 NARRATIVE

The crew will assume the watch at 100% power. C2A IA compressor is out of service for overhaul. It is a day shift normal working day. ANO is currently under a severe thunderstorm warning for the next hour. All actions of 1203.025 Natural Emergencies are complete.

The crew will start P33B and secure P33C per1104.028 ICW Operating Procedure step10.2 **(BOP-N) (SRO-N)**. This is being performed in order to visually inspect the motor rotor. P33B had not been drained.

A lightning strike will cause the auto start of the #2 EDG. The crew should determine it is a spurious actuation. The #2 EDG SW valve CV-3807 will not open resulting in no cooling flow to the EDG **(BOP-C) (SRO-C)**. The crew should take the #1 EDG to lockout to prevent an automatic trip of the EDG **(TS)**.
TS 3.8.1. Condition B

The dispatcher will call and direct U1 to reduce net generator output to 700Mwe **(SRO-N) (ATC-R)**.

A second lightning strike will result in the loss on NNI-Y power supply **(ATC-I) SRO-I)**. The crew should recognize the loss of NNI-Y power. The CRS should implement 1203.047 Loss of NNI Power.

A loss of offsite power will occur due to storm related grid instabilities **(SRO-M) (ATC-M) (BOP-M)**. The reactor will trip automatically.

The #1 EDG will not auto start requiring the BOP to manually start the EDG **(BOP-C) (BOP-CT)**. The #1 EDG voltage will be low requiring the BOP to raise EDG voltage.
CT criteria – The BOP should start the #1 EDG before the 15 minute criteria for declaring an SAE for a station blackout.

The EFIC system is failed and will not automatically actuate EFW **(ATC-C)**. The ATC should manually actuate EFW from the remote switch matrix **(ATC-CT) (TS)**.
TS 3.3.11 Condition B
CT – EFW should be manually actuated before the ERV opens in automatic.

The #1 EDG will trip putting the plant into a blackout **(SRO-M) (ATC-M) (BOP-M) (SRO-C) (ATC-C) (BOP-C) (TS)**.
TS 3.8.1 Condition E, 3.0.3

The alternate AC generator will become available. The BOP should energize the A3 bus from the AAC generator **(BOP-CT) (BOP-N) (SRO-N)**.
CT criteria – The AAC generator should be placed in service within 20 minutes of losing #1 EDG.

Simulator Instructions for Scenario 2-R2				
Event No.	Time	Malf. No.	Value/ Ramp Time	Event Description
Recall IC **2** **IMF FW621, IRF CO_C2A off, IOR DO_C2ASLG**				
1	0	N/A	N/A	Swap operating ICW pumps to have P33A and P33B running.
2	10	IRF Lightning IOR DI-DG2S	True True	Lightning strike will cause the auto start of #2 EDG.
3	Initial	IMF CV-3807	0	#2 EDG SW valve will not open following the EDG auto start. This will require the operators to shutdown #2 EDG. **(TS)**
4	18	N/A	N/A	Dispatcher will call and direct a power reduction to 700 Mwe in the next 15 minutes.
5	28	IRF Lightning IMF ED451	True N/A	Another lightning strike will result in the loss of the NNI Y power supply.
6	36	IMF ED183	N/A	A Loss of Offsite Power will occur resulting in an automatic reactor trip.
7	Initial	IMF DG175	N/A	The #1 EDG will not auto start requiring the operators to manually start the EDG. **(BOP-CT) criteria – The BOP should start the #1 EDG before 15 minute criteria for declaring an SAE for a station blackout.**

CONTINUED

Simulator Instructions for Scenario 2-R2				
Event No.	Time	Malf. No.	Value/ Ramp Time	Event Description
8	Initial	IMF FW621	N/A	EFIC is failed and will not automatically actuate EFW. **(TS) (ATC-CT) criteria - EFW should be manually actuated before the ERV opens in automatic.**
9	48	IMF DG???	N/A	The #1 EDG will trip putting the plant into a blackout. **(TS)**
U2 will report ACC Generator is running slow. Maintenance has been dispatched.				
At T=52 U2 will report AAC Generator has been repaired and is running normally with 2A901 closed.				
10	52	IRF A901	Closed	The Alternate AC Generator will become available. **(BOP-CT) criteria – The AAC generator should be placed in service within 20 minutes of losing #1 EDG.**

Op-Test No.: 2008-1	Scenario No.: 2-R2	Event No.: 1
Event Description: Swap operating ICW pumps to have P33A and P33B running.		

Time	Position	Applicant's Actions or Behavior
0	BOP	Open A/B crossconnect valves: **(BOP-N) (SRO-N)** • ICW Pumps Suction Crossconnect (CV-2240) • ICW Pumps Discharge Crossconnect (CV-2238)
	BOP	Direct AO to vent P-33B as necessary by opening ICW Pump P-33B Vent (ICW-1191).
	BOP	Start P-33B.
	BOP	WHEN P-33B has run at least 3 minutes, THEN stop P-33C.
	BOP	Verify flow is normal (~2000 gpm) on ICW Coolers Inlet Flow Non-Nuc (FI-2218) (CO9).
This event is complete when ICW flows are verified normal.		

Op-Test No.: 2008-1 Scenario No.: 2-R2 Event No.: 2 & 3

Event Description:

- Lightning strike will cause the auto start of #2 EDG.
- #2 EDG SW valve will not open following the EDG auto start. This will require the operators to shutdown #2 EDG.

Time	Position	Applicant's Actions or Behavior
10	CRS	Acknowledge and report annunciator K01A3 EDG 2 AUTO START COMMAND.
	CRS	Direct plant operation per K01A3 EDG 2 AUTO START COMMAND
	BOP	Verify that DG2 auto start
	BOP	Check bus A4 energized from bus A1.
	BOP	Check bus B6 energized.
	ANY	Verify SERV WTR to DG2 CLRS (CV-3807) opens. Recognize and report CV3806 will not open. **(BOP-C) (SRO-C)**
	CRS	Direct #2 EDG be placed in lockout. (Crew may try to push stop P/B first. EDG will stop but then restart) **TS 3.8.1. Condition B**
	CRS	Contact work management to investigate cause of EDG start.
	CRS	Refer to TS 3.8.1 Condition B for operability requirements.
	CRS	Verify proper MOD alignment for Service Water Pump (P-4B) and Makeup Pump (P-36B) per Makeup & Purification System Operation (1104.002) AND Service Water and Auxiliary Cooling System (1104.029).
This event is complete when #2 EDG is in lockout		

Op-Test No.: 2008-1	Scenario No.: 2-R2	Event No.: 4

Event Description:
Dispatcher will call and direct a power reduction to 700MWe in the next 15 minutes.

Time	Position	Applicant's Actions or Behavior
18	CRS	Direct operations per 1203.045 Rapid Plant Shutdown
	ATC	Commence a plant shutdown at 0.5 to 10% per minute. **(ATC-R) (SRO-N)** • Place ULD in manual • Lower ULD setpoint to ~730 MWe
	ATC BOP	Monitor ICS and EHC subsystems for proper integrated response.
	ATC	Refer to "Contingency Reactivity Plans
	CRS	At <90%, direct Zinc Injection be secured
	ATC	Stabilize power ~700 Mwe
This event is complete when power is stable at ~700 Mwe		

Op-Test No.: 2008-1 Scenario No.: 2-R2 Event No.: 5

Event Description:
Another lightning strike will result in the loss of the NNI Y power supply.

Time	Position	Applicant's Actions or Behavior
28	ANY	Recognize the loss of NNI-Y power **(ATC-I) (SRO-I)**
	CRS	Direct operations per 1203.047 Loss of NNI Power
	ATC BOP	Verify NNI X-powered instruments selected on C03, C04, and C13.
	ATC	Check NNI Y AC power available.
EVALUATOR NOTE: **The BOP will go to back of control room to a picture of RS-4 to simulate resetting Breaker RS-4 bkr 9. The evaluator will tell the BOP that bkr 9 will not reset.**		
	BOP	Reset **AND** close Normal supply breaker RS-4 bkr 9.
	CRS	Dispatch an operator to reset **AND** close Alternate supply breaker Y01 bkr 39, while continuing with this procedure.
Report as AO that Y01 bkr 39 will not reset.		
	CRS	Dispatch an operator to reset NNI Y power supply using Reactor Coolant System NNI (1105.006), "Resetting NNI Power Supplies" section, while continuing with this procedure.
This event is complete when NNI-X instruments are selected or verified SASS selected to NNI X power and NNI Y power supply breakers are reported as not closing.		

Op-Test No.: 2008-1 Scenario No.: 2-R2 Event No.: 6

Event Description:
A Loss of Offsite Power will occur resulting in an automatic reactor trip.

Time	Position	Applicant's Actions or Behavior
36	ANY	Recognize and report a loss of offsite power **(ATC-M) (BOP-M) (SRO-M)**
	CRS	Direct operations per 1202.001 RX trip.
	ATC	Manually Trip Rx, Verify all rods inserted and Reactor power dropping.
	BOP	Manually trip Turbine, Verify Turbine throttle and governor valves closed
	ANY	Check adequate SCM

This event is complete when the immediate actions of 1202.001 are complete.

Op-Test No.: 2008-1	Scenario No.: 2-R2	Event No.: 7 & 8

Event Description:
- The #1 EDG will not auto start requiring the operators to manually start the EDG.
- EFIC is failed and will not automatically actuate EFW.

Time	Position	Applicant's Actions or Behavior
LOOP	ANY	Recognize #1 EDG failed to auto start. **(BOP-C) (SRO-C)**
	BOP	Manually start #2 EDG. **(CT-BOP) CT criteria – The BOP should start the #1 EDG before the 15 minute criteria for declaring an SAE for a station blackout.**
	CRS	Direct operations per 1202.007 Degraded Power.
	BOP	Verify both EDGs supplying associated ES buses with proper voltage, frequency and loading: • 4100 to 4200V • 59.5 to 60.5 Hz • ≤2750 kw
	BOP	Recognize #1 EDG voltage is low
	BOP	Adjust #1 EDG voltage to ~4160V
	BOP	Verify 480V MCC B55 and 56 power supply is selected to B5.
	BOP	Close ACW Isolation (CV-3643).
	BOP	Close CV-3640
	BOP	Close CV-3820
	CRS	Dispatch an operator to restore EDG (May not be performed as #2 EDG is known to be OOS.
U2 will report ACC Generator is running slow. Maintenance has been dispatched.		
	CRS	Request U2 start AAC Generator.
	BOP	Verify P36B Bus Select MOD Control selected to A3.
	BOP	Verify P4B Bus Select MOD Control selected to bus A3.

EVENT 7 & 8 CONTINUED

Op-Test No.: 2008-1	Scenario No.: 2-R2	Event No.: 7 & 8 CONTINUED

Event Description:

- The #1 EDG will not auto start requiring the operators to manually start the EDG.
- EFIC is failed and will not automatically actuate EFW.

Time	Position	Applicant's Actions or Behavior
	BOP	Verify SW to DG1 CLRs open (CV-3806).
	BOP	Verify a Service Water pump P4A on after 15-second time delay.
	ATC	Actuate EFW and MSLI for both SGs AND verify proper actuation and control of EFW and MSLI (RT 6) **(ATC-C) (CT-ATC)** **(TS) TS 3.3.11 Condition B** **CT – EFW should be manually actuated before the ERV opens in automatic.**
	ATC	Operate ATM Dump CNTRL valves in HAND to minimize cycling and conserve Instrument Air.
	ANY	Check RCS press remains ≥1700 psigPZR level remains ≥30".
	BOP	Isolate Letdown by closing Letdown Cooler Outlets (CV-1214 and 1216).
	ANY	Check OP and STBY HPI pumps off.
	BOP	Place RCP Seals Bleedoff (Alternate Path to Quench Tank) controls in CLOSE (SV-1270, 1271, 1272 and 1273).
	BOP	Isolate RCP Seal Bleedoff (Normal) by closing CV-1270, 1271, 1272, and 1273.
	ATC	IF PZR level is ≥55", THEN verify Proportional Control Pressurizer Heaters operating in AUTO.
	ATC BOP	Place the following breakers in handswitches in PULL-TO-LOCK. • A1, A2, H1, H2 • Condensate pumps (P2A, B and C) • ICW pumps (P33A, B and C)
	ATC	Verify RCP Seal INJ Block closed (CV-1206).
	BOP	Close RCS Makeup Block (CV-1233 or 1234).
	BOP	Open BWST Outlet to OP HPI pump CV-1407.

This event is complete when CV-1407 is open

Op-Test No.: 2008-1 Scenario No.: 2-R2 Event No.: 9

Event Description:
The #1 EDG will trip putting the plant into a blackout.

Time	Position	Applicant's Actions or Behavior
48	ANY	Recognize and report #1 EDG tripped. **(ATC-M) (BOP-M) (SRO-M) (ATC-C) (BOP-C) (SRO-C) (TS) TS 3.8.1 Condition E, 3.0.3**
	CRS	Direct operations per 1202.008 Blackout.
	CRS	Dispatch an operator to restore EDG (May not be performed as #2 EDG is known to be OOS.
U2 will report Maintenance is working on the ACC Generator		
	CRS	Request U2 start AAC Generator.
	ATC	Check adequate SCM is maintained.
	ATC	Place P7B handswitch in PULL-TO-LOCK
	BOP	Check off-site power available
	CRS	Direct dispatcher to take emergency actions to restore power, including system load shed if necessary.
	CRS	Transition to step 33.
	CRS	Dispatch an operator to take manual control of EFW pump (P7A) using Emergency Feedwater pump Operation (1106.006).
This event is complete when the WCO is dispatched or T=52		

Op-Test No.: 2008-1 Scenario No.: 2-R2 Event No.: 10

Event Description:
The Alternate AC Generator will become available.

Time	Position	Applicant's Actions or Behavior
Report as U2 that the AAC generator is running properly and 2A901 is closed.		
52	CRS	Transition to step 2
	CRS	Direct BOP to energize A3 using ES Electrical System Operation (1107.002), Alternate AC Generator Operation" section. **(BOP-N) (SRO-N) (CT-BOP) CT criteria – The AAC generator should be placed in service within 20 minutes of losing #1 EDG.**
	BOP	Place DG1 Output Breaker (A-308) in PULL-TO-LOCK.
	BOP	Verify A1 to A3 Supply Breaker (A-309) open.
	BOP	Verify A3-A4 Tie Breakers open (A-310 and A-410).
	BOP	Verify no bus A3 Lockout
	BOP	Turn Synchronize switch on for A3-A4 Tie Breakers (A-310 and A-410).
	BOP	Close A3-A4 Crosstie (A-310).
	BOP	Turn Synchronize switch off.
	BOP	Coordinate with Unit 2 to ensure 2K9 is NOT overloaded when starting loads on bus A3.
	BOP	IF desired, THEN start Service Water Pump P-4A or B per Service Water and Auxiliary Cooling System (1104.029).
	CRS	GO TO 1202.007, "DEGRADED POWER" procedure.
This scenario is complete when A3 is powered from the AAC Generator		

Facility: ANO-1 Scenario No.: 3-R2 Op-Test No.: 2008-1

Examiners: _____ Operators: _____
_____ _____
_____ _____

Initial Conditions:
100% power
C2A IA compressor is out of service for overhaul.
RPS is failed
RX trip P/B on C03 is failed
Turnover:
C2A IA compressor is out of service for overhaul.
Swap operating EH oil pumps for following maintenance on the standby pump.

Event No.	Malf. No.	Event Type*	Event Description
1	N/A	N (BOP, SRO)	Swap the operating EH oil pumps
2	AO_PI2418 K10B5 DO_HS2420R DO_HS2420G CV2420	I (BOP, SRO)	'B' core flood tank pressure transmitter line breaks **(TS)**
3	FW086	C (SRO, BOP)	P8A heater drain pump winding failure and trip.
4	N/A	N (SRO) R (ATC)	Power reduction
5	CO_P14B CO_P14A DI_PB9201	C (BOP)	Operating EH pump will trip Turbine trip >43%
6	RP246,7,8,9 DI_ICC0020	C (ATC) C (ATC) M (ALL)	RPS is failed **(TS)** C03 manual trip P/B failed **(TS)** Manual reactor trip **(ATC-CT)**
7	RC001	M (ALL)	~150 GPM tube leak in the 'A" SG **(TS) (BOP-CT)**
8	N/A	N (ATC)	Plant cooldown and depressurization

* (N)ormal, (R)eactivity, (I)nstrument, (C)omponent, (M)ajor

Scenario #3-R2 Objectives

1) Evaluate individual ability to swap running EH oil pumps.
2) Evaluate individual ability to recognize and respond to the failure of a core flood tank pressure indication.
3) Evaluate individual ability to recognize and respond to a heater drain pump trip.
4) Evaluate individual ability to perform a rapid plant power reduction.
5) Evaluate individual ability to recognize and respond to the loss of the operating EH oil pump and resultant turbine trip.
6) Evaluate individual ability to recognize and respond to a reactor protection system failure to complete an automatic trip.
7) Evaluate individual ability to recognize and respond to a steam generator tube leak.
8) Evaluate individual ability to commence a reactor coolant system cool down and depressurization.

SCENARIO #3-R2 NARRATIVE

The crew will assume the watch with the plant at 100% power. C2A IA compressor is out of service for overhaul.

The turn over sheet will direct the crew to swap operating turbine electro-hydraulic pumps per 1106.012 Electro-Hydraulic Oil System Operation Section 14 **(SRO-N) (BOP-N).**

The 'B' Core Flood Tank pressure instrument PT-2418 tube will fail resulting in a low pressure alarm and the slow venting of the 'B' CFT. The CRS should implement 1203.012I Annunciator K10 Corrective Action **(BOP-I) (SRO-I) (TS)**
TS 3.5.1 Condition B

P8A heater drain pump will experience a winding failure causing a high temperature alarm and P8A trip **(SRO-C) (BOP-C)**. The CRS should reference 1203.012E Annunciator Corrective Action P8A/P8B FLOW LO and CONDENSATE PUMP AUTOSTART.

A plant power reduction is required to maintain suction pressure. The CRS should direct the power reduction per 1203.045 Rapid Plant Shutdown **(ATC-R) (SRO-N)**.

After the power reduction the operating EH oil will trip. The standby pump will not start **(BOP-C)**. The loss of both EH pumps will result in a turbine trip. (Crew may complete a manual RX trip prior to the turbine trip) The reactor will fail to trip do to a failure of RPS **(ATC-C) (TS)**. The manual RX trip pushbutton is failed **(ATC-C)**. The ATC should manually trip the reactor using the shunt trip breakers **(ATC-CT) (ATC-M) (BOP-M) (SRO-M)**.
TS 3.3.1 Condition C
TS 3.3.2 Condition A
CT criteria – The reactor should be manually tripped before the pressurizer goes solid.

A ~150gpm tube leak will occur in the 'A' SG **(ATC-M) (BOP-M) (SRO-M) (TS)**. The CRS should direct operation per 1202.006 Tube Rupture. The leak will be large enough to require HPI be initiated **(BOP-CT)**. An RCS depressurization and cooldown should be started **(ATC-N)**.
TS 3.1.13 Condition B
CT criteria – HPI should be initiated before SCM is lost.

The scenario may be terminated when a controlled cooldown and depressurization is started or at the direction of the lead evaluator.

Simulator Instructions for Scenario 3-R2				
Event No.	Time	Malf. No.	Value/ Ramp Time	Event Description
Recall IC **IMF RP246,7,8,9 IOR DI_ICC0020 IRF CO_C2A off IOR DO_C2ASLG**				
1	0	N/A	N/A	Swap the operating EH oil pumps
2	8	IOR AO_PI2418 IRF K10B5 IOR DO_HS2420R IOR DO_HS2420G IMF CV2420	0 ON OFF ON 1	The 'B' core flood tank pressure indication will fail to zero and the 'B' CFT actual pressure will slowly vent to the RB atmosphere. **(TS)**
3 & 4	19	IMF FW086	N/A	P8A heater drain pump will experience a winding failure causing it to heat up and eventually trip requiring a power reduction to ~60%.
5	32	IRF CO_P14A IRF CO_P14B	OFF OFF	The operating EH pump will trip causing a loss of EH fluid.
	32.5	IOR DI_PB9201	True	Main turbine trip >43% power. (Crew may complete a manual RX trip prior to the turbine trip)
6	Initial	IMF RP246,7,8,9 IOR DI_ICC0020	N/A False	RPS is failed and will not cause an automatic trip. **(TS)** Manual trip P/B is failed requiring the operators to manually trip the reactor using the shunt trip P/B. **(TS) (ATC-CT) criteria – The reactor should be manually tripped before the pressurizer goes solid.**
7	40	IMF RC001	.2	A ~150 GPM tube leak will develop in the 'A" SG requiring initiation of HPI. **(TS) (BOP-CT) criteria – HPI should be initiated before SCM is lost.**
8	N/A	N/A	N/A	A plant cooldown is required to allow for isolation of the bad SG.

Op-Test No.: 2008-1	Scenario No.: 3-R2	Event No.: 1

Event Description:
Swap the operating EH oil pumps

Time	Position	Applicant's Actions or Behavior
0	CRS, BOP	Dispatch operator to EH oil pumps to monitor for proper operation.
	BOP	Start P-14A by placing HS-9201 in START.
AO at the EH pumps will report EH pressure on PI-8534 is reading ~1850psi		
	ANY	Recognize P-14A Pressure is normal.
	BOP	Stop P-14B
This event is complete when P-14B is secured		

Op-Test No.: 2008-1	Scenario No.: 3-R2	Event No.: 2

Event Description:
The ‘B’ core flood tank pressure indication will fail to zero and the ‘B’ CFT actual pressure will slowly vent to the RB atmosphere. **(TS)**

CFT Pressure transmitter failure		
	ANY	Recognize and report CFT Low pressure alarm
	CRS	Direct operations per 1203.012I
	ANY	Determine PI-2418 is failed causing CFT (T-2B) pressure to be low
	ANY	Recognize that actual CFT pressure is lowering.
	CRS	Determine CFT inoperable, write a Condition Report and enter **TS 3.5.1 Condition B.**
	CRS	Crew may begin 1104.001 Core Flood System Operating Procedure to raise ‘B’ CFT pressure or determine a leak has occurred and CFT pressure cannot be recovered.
This event is complete when the ‘B’ CFT determined to be inoperable.		

Op-Test No.: 2008-1 Scenario No.: 3-R2 Event No.: 3 & 4

Event Description:

- P8A heater drain pump will experience a winding failure causing it to heat up and eventually trip.
- A power reduction is required to maintain feedwater suction pressure.

Time	Position	Applicant's Actions or Behavior
	ANY	Recognize and report P8A winding temperature is going up. (Crew may elect to stop P8A prior to the pump tripping.)
	CRS	Direct operations per 1203.012E Annunciator K06 Corrective action.
	CRS	Initiate steps to determine cause of high temperature alarm
	ATC	Commence reducing power at ~ 10%/minute per Rapid Plant Shutdown (1203.045) to within the capacity of T-40 high level dump (~ 630 MW or ~70% power) and secure affected pump. (The pump may trip before a power reduction can be started.)
	ATC, BOP	Monitor ICS and EHC subsystems for proper integrated response.
	CRS	Direct securing Zinc Injection.
	CRS	As time permits instruct ATC to refer to "Contingency Reactivity Plans" AND Exhibit A (Operation of APSR Group) of Power Operation (1102.004)
	ANY	Contact AO to verify Htr Drn Tk T-40A Hi Lvl Dump Isol (CV-3041A) is open at breaker (B-3252).
Report as AO that P8A is not rotating		
	ANY	Direct AO to check the tripped Heater Drain Pump for reverse rotation.
	ATC, BOP	Place Low Level Condenser Spray CV-2907 AND CV-2868 in service by placing HS-2907 on C02 in OPEN.
This event is complete when plant power is stabilized at ~70%		

Op-Test No.: 2008-1 Scenario No.: 3-R2 Event No.: 5 & 6

Event Description:

- The operating EH pump breaker will trip causing a loss of EH fluid and a main turbine trip >43% power.
- RPS is failed and will not cause an automatic trip. **(TS)** The operators are required the manually trip the reactor.

Time	Position	Applicant's Actions or Behavior
	ANY	Recognize and report P14A tripped and P14B failed to start.
	CRS	Dispatch operator to reset P-14A breaker (B-3225). (Crew may not have time to dispatch this operator before the turbine trips)
	ANY	Recognize turbine valves closing
	ANY	Recognize turbine tripped >43% power.
	ANY	Recognize RPS failed to automatically trip the reactor. **TS 3.3.1 Condition C**
	ATC	Recognize manual reactor trip push button is failed **TS 3.3.2 Condition A**
	ATC	Trip the reactor using the shunt trip push buttons. **CT criteria – The reactor should be manually tripped before the pressurizer goes solid.**
	CRS	Direct operations per 1202.001 Reactor Trip
	ANY	Recognize and report a loss of offsite power
	CRS	Direct operations per 1202.001 RX trip.
	ATC	Manually Trip Rx, Verify all rods inserted and Reactor power dropping.
	BOP	Manually trip Turbine, Verify Turbine throttle and governor valves closed
	ANY	Check adequate SCM
	CRS	Advise Shift Manager to implement Emergency Action Level Classification
	ATC	Reduce Letdown by closing Orifice Bypass
	BOP	Open BWST Outlet to OP HPI pump CV-1407

EVENT 5 & 6 CONTINUED

Op-Test No.: 2008-1	Scenario No.: 3-R2	Event No.: 5 & 6 Continued

Event Description:

- The operating EH pump breaker will trip causing a loss of EH fluid and a main turbine trip >43% power.
- RPS is failed and will not cause an automatic trip. Manual trip P/B is failed requiring the operators to manually trip the reactor using the shunt trip P/B.

Time	Position	Applicant's Actions or Behavior
	ATC	Adjust Pressurizer Level Control setpoint to 100"
	BOP	Check for proper electrical response
	ANY	Check OP HPI pump supplying normal Makeup and Seal Injection.
	ATC	Check both SG levels remain ≤410".
	ANY	Check Instrument Air Header press ≥75 psi.
	ATC	Check all NNI power available
	ATC	Check all ICS power available
	ATC	Check SG press ≥900 psig.
	ATC	Check MSSV OPEN alarm clear (K07-C5).
	ATC	Check MSIVs open.
	ATC	Check Turb BYP valves operate to maintain SG press 950 to 1020 psig.
	ATC	Place both Feedwater Demands in HANDAND verify demand at zero.
	ATC	Check Main Block valves closed (CV-2625 and 2675)
	ATC	Check Low Load Block valves closed (CV-2624 and 2674).
	ATC	Check Startup valves maintain SG levels 20 to 40".
	ATC	Verify MFW pumps run back and then operate to maintain ≥70 psid across Startup Valves.
	BOP	Check Two Service Water pumps (P4A, B, or C).

EVENT 5 & 6 CONTINUED

Op-Test No.: 2008-1	Scenario No.: 3-R2	Event No.: 5 & 6 Continued

Event Description:

- The operating EH pump breaker will trip causing a loss of EH fluid and a main turbine trip >43% power.
- RPS is failed and will not cause an automatic trip. Manual trip P/B is failed requiring the operators to manually trip the reactor using the shunt trip P/B.

Time	Position	Applicant's Actions or Behavior
	ANY	Check ICW pump supplying Nuclear loop (P33C or B).
	ANY	Check ICW pump supplying Non-nuclear loop (P33A or B).
	BOP	Check RB Cooling Fans (VSF1A, B, C, D, and E)
	BOP	Check Previously running Main Chiller(s) (VCH1A, B)
	ANY	Check ESAS Actuation alarms clear on K11.
	ANY	Check RCS press > 1700 psig.
	ATC	Check Pressurizer Level Control valve (CV-1235) maintains PZR level > 55"
	BOP	Check PZR steam space integrity.
	ATC	Verify ERV, Pressurizer Spray, and Pressurizer Heaters operate to control RCS press 2050 to 2250 psig.
	ANY	Check at least one RCP running.
	ATC	Check RCS T-cold remains ≥540°F.
	ANY	Check adequate SCM.
	BOP	Check SG tube integrity

This event is complete when the operators recognize the SG tube leak.

Op-Test No.: 2008-1	Scenario No.: 3-R2	Event No.: 7 & 8

Event Description:
A ~150 GPM tube leak will develop in the 'A" SG requiring initiation of HPI.

Time	Position	Applicant's Actions or Behavior
	ANY	Recognize SG tube leak on the 'A' SG **TS 3.1.13 Condition B**
	CRS	Transition to 1202.006 Tube Rupture
	CRS	Direct operations per 1202.006 Tube Rupture step 25
	ATC	Manually Trip Rx, Verify all rods inserted and Reactor power dropping.
	BOP	Manually trip Turbine, Verify Turbine throttle and governor valves closed
	ANY	Check adequate SCM
	CRS	Advise Shift Manager to Notify Nuclear Chemistry to begin off-site dose projections **and** Implement Emergency Action Level Classification (1903.010).
	BOP	Open BWST Outlet to OP HPI pump CV-1407
	ATC	Reduce Letdown by closing Orifice Bypass
	BOP	Adjust Header Pressure Controller setpoint
	ATC	Check TURB BYP valves controlling SG press 950 to 990 psig.
	ATC	Operate Pressurizer Heaters AND Pressurizer Spray valve (CV-1008) to maintain RCS press low within limits of Figure 3.
	ATC, BOP	WHEN RCS press is <1700 psig, THEN bypass ESAS.
	BOP	Verify OTSG N-16 monitors selected to Gross.
	ANY	Recognize Lowering PZR level
	BOP	Initiate RT2 HPI **CT criteria – HPI should be initiated before SCM is lost.**
	ANY	Determine 'A' as bad SG
	CRS	Direct AO to perform Control of Secondary System Contamination (1203.014) in conjunction with this procedure.

EVENT 7 & 8 CONTINUED

Op-Test No.: 2008-1	Scenario No.: 3-R2	Event No.: 7 & 8 Continued

Event Description:
A ~150 GPM tube leak will develop in the ‘A” SG requiring initiation of HPI.

Time	Position	Applicant’s Actions or Behavior
	ATC	Select ‘A’ SG to indicate on Header press recorder.
	ATC	Verify EFW pump Turbine (K3) Steam Supply CV-2667 from ‘A’ SG in MANUAL closed.
	ANY	Check adequate SCM
	ANY	Check ESAS Actuation alarms clear on K11.
	ANY	Check at least one RCP per loop running.
	BOP	Trip P-32D
	ATC	Establish RCS cooldown rate of ≤100°F/hr on ‘B’ SG,
	ATC	Control RCS press low within limits of Figure 3 (RT 14).
This scenario is complete when an RCS cooldown and depressurization have been started		

Facility: ANO-1 Date of Exam: 9-8-2008 Operating Test No.: 2008-1

APPLICANT	EVENT TYPE	Scenarios									TOTAL	MINIMUM(*)		
		1			2			3						
		CREW POSITION			CREW POSITION			CREW POSITION						
		SRO	ATC	BOP	SRO	ATC	BOP	SRO	ATC	BOP		R	I	U
RO 1, 2, 3	RX		4								1	1	1	0
	NOR						1, 10				2	1	1	1
	I/C		2, 5, 6				3, 7, 9				6	4	4	2
	MAJ		6,7				6, 9				4	2	2	1
	TS										0	0	2	2
SRO-U 2, 3, 5	RX					4					0	1	1	0
	NOR	1, 4									2	1	1	1
	I/C	2, 3, 5,6,7				5, 8, 9					5	4	4	2
	MAJ	6,7				6, 9					2	2	2	1
	TS	6,7									2	0	2	2
SRO-U 1, 4, 6	RX										0	1	1	0
	NOR			1	1, 4, 10						3	1	1	1
	I/C			3, 5, 7	3, 5, 7, 9						4	4	4	2
	MAJ			6,7	6, 9						2	2	2	1
	TS				3, 8, 9						3	0	2	2

Instructions:

1. Check the applicant level and enter the operating test number and Form ES-D-1 event numbers for each event type; TS are not applicable for RO applicants. ROs must serve in both the “at-the-controls (ATC)” and “balance-of-plant (BOP)” positions; Instant SROs must serve in both the SRO and the ATC positions, including at least two instrument or component (I/C) malfunctions and one major transient, in the ATC position. If an Instant SRO *additionally* serves in the BOP position, one I/C malfunction can be credited toward the two I/C malfunctions required for the ATC position.

2. Reactivity manipulations may be conducted under normal or *controlled* abnormal conditions (refer to Section D.5.d) but must be significant per Section C.2.a of Appendix D. (*) Reactivity and normal evolutions may be replaced with additional instrument or component malfunctions on a 1-for-1 basis.

3. Whenever practical, both instrument and component malfunctions should be included; only those that require verifiable actions that provide insight to the applicant’s competence count toward the minimum requirements specified for the applicant’s license level in the right-hand columns.