Draft Submittal

(Pink Paper)

Reactor Operator Written Exam

MCGUIRE MAY 2008 EXAM - 50-369, 370/2008-301
DRAFT RO WRITTEN EXAM (PART 1 OF 2)

NRC Examination

Written Exam

(Common)

Volume 1

McGuire Nuclear Station

45-day Submittal

March 17, 2008

Site-Specific Written Examination
McGuire Units 1 and 2
Senior Reactor Operator
Answer Key

1.	B	26.	B	51.	B	76.	A
2.	D	27.	C	52.	A	77.	D
3.	C	28.	B	53.	C	78.	C
4.	A	29.	A	54.	A	79.	D
5.	D	30.	C	55.	B	80.	D
6.	D	31.	C	56.	A	81.	B
7.	C	32.	A	57.	A	82.	A
8.	A	33.	B	58.	A	83.	A
9.	C	34.	B	59.	D	84.	A
10.	B	35.	C	60.	B	85.	D
11.	A	36.	B	61.	C	86.	A
12.	C	37.	D	62.	C	87.	A
13.	C	38.	A	63.	A	88.	A
14.	A	39.	D	64.	A	89.	B
15.	B	40.	C	65.	C	90.	A
16.	C	41.	B	66.	B	91.	D
17.	A	42.	C	67.	A	92.	B
18.	C	43.	B	68.	C	93.	C
19.	C	44.	A	69.	A	94.	B
20.	A	45.	C	70.	C	95.	A
21.	D	46.	A	71.	D	96.	B
22.	A	47.	D	72.	B	97.	D
23.	B	48.	C	73.	B	98.	A
24.	A	49.	A	74.	A	99.	A
25.	B	50.	C	75.	B	100.	D

Facility:	McGuire 2008 NRC Exam	Date of Exam:	5/12/2008

Tier	Group	RO K/A Category Points												SRO-Only Points				
		K 1	K 2	K 3	K 4	K 5	K 6	A 1	A 2	A 3	A 4	G *	Total	A2		G*		Total
1. Emergency & Plant Evolutions	1	3	3	3				3	3			3	18	3		3		6
	2	1	2	1				2	2			1	9	2		2		4
	Tier Totals	4	5	4				5	5			4	27	5		5		10
2. Plant Systems	1	2	2	3	3	2	3	2	2	3	3	3	28	3		2		5
	2	1	1	1	1	1	1	1	1	1	1	0	10	0	2	1		3
	Tier Totals	3	3	4	4	3	4	3	3	4	4	3	38	5		3		8
3. Generic Knowledge & Abilities Categories		1			2			3			4		10	1	2	3	4	7
		3			3			2			2			1	2	2	2	

Note:

1. Ensure that at least two topics from every applicable K/A category are sampled within each tier of the RO and SRO-only outlines (i.e., except for one category in Tier 3 of the SRO-only outline, the "Tier Totals" in each K/A category shall not be less than two).

2. The point total for each group and tier in the proposed outline must match that specified in the table. The final point total for each group and tier may deviate by ±1 from that specified in the table based on NRC revisions. The final RO exam must total 75 points and the SRO-only exam must total 25 points.

3. Systems/evolutions within each group are identified on the associated outline; systems or evolutions that do not apply at the facility should be deleted and justified; operationally important, site-specific systems that are not included on the outline should be added. Refer to section D.1.b of ES-401, for guidance regarding elimination of inappropriate K/A statements.

4. Select topics from as many systems and evolutions as possible; sample every system or evolution in the group before selecting a second topic for any system or evolution.

5. Absent a plant specific priority, only those KAs having an importance rating (IR) of 2.5 or higher shall be selected. Use the RO and SRO ratings for the RO and SRO-only portions, respectively.

6. Select SRO topics for Tiers 1 and 2 from the shaded systems and K/A categories.

7.* The generic (G) K/As in Tiers 1 and 2 shall be selected from Section 2 of the K/A Catalog, but the topics must be relevant to the applicable evolution or system. Refer to Section D.1.b of ES-401 for the applicable K/A's

8. On the following pages, enter the K/A numbers, a brief description of each topic, the topics' importance ratings (IR) for the applicable license level, and the point totals (#) for each system and category. Enter the group and tier totals for each category in the table above. If fuel handling equipment is sampled in other than Category A2 or G* on the SRO-only exam, enter it on the left side of Column A2 for Tier 2, Group 2 (Note #1 does not apply). Use duplicate pages for RO and SRO-only exams.

9. For Tier 3, select topics from Section 2 of the K/A Catalog, and enter the K/A numbers, descriptions, IRs, and point totals (#) on Form ES-401-3. Limit SRO selections to K/As that are linked to 10CFR55.43

McGuire 2008 NRC Exam
Written Examination Outline
Emergency and Abnormal Plant Evolutions – Tier 1 Group 1

EAPE # / Name Safety Function	K1	K2	K3	A1	A2	G	K/A Topic(s)	Imp.	Q#
009 / Small Break LOCA / 3						X	2.1.27 - Conduct of Operations: Knowledge of system purpose and / or function.	4.0	76
026 / Loss of Component Cooling Water / 8						X	2.1.25 - Conduct of Operations: Ability to interpret reference materials, such as graphs, curves, tables, etc.	4.2	77
029 / Anticipated Transient Without Scram (ATWS) / 1					X		EA2.01 - Ability to determine or interpret the following as they apply to a ATWS: Reactor nuclear instrumentation	4.7	78
055 / Station Blackout / 6					X		EA2.03 - Ability to determine or interpret the following as they apply to a Station Blackout: Actions necessary to restore power	4.7	79
056 / Loss of Off-site Power / 6					X		AA2.18 - Ability to determine and interpret the following as they apply to the Loss of Offsite Power: Reactor coolant temperature, pressure, and PZR level recorders	4.0	80
058 / Loss of DC Power / 6						X	2.2.37 Equipment Control: Ability to determine operability and/or availability of safety related equipment	4.6	81
007 / Reactor Trip / 1						X	2.4.46 - Emergency Procedures / Plan: Ability to verify that the alarms are consistent with the plant conditions.	4.2	39
008 / Pressurizer Vapor Space Accident / 3				X			AA1.03 - Ability to operate and / or monitor the following as they apply to the Pressurizer Vapor Space Accident: Turbine bypass in manual control to maintain header pressure	2.8	40
009 / Small Break LOCA / 3		X					EK2.03 - Knowledge of the interrelations between the small break LOCA and the following: S/Gs	3.0	41
011 / Large Break LOCA / 3			X				EK3.06 - Knowledge of the reasons for the following responses as the apply to the Large Break LOCA: Actuation of Phase A and B during LOCA initiation	4.3	42
015 / 17 / Reactor Coolant Pump Malfunctions / 4				X			AA1.16 - Ability to operate and / or monitor the following as they apply to the Reactor Coolant Pump Malfunctions (Loss of RC Flow): Low power reactor trip block status lights	3.2	43
022 / Loss of Reactor Coolant Makeup / 2					X		AA2.04 - Ability to determine and interpret the following as they apply to the Loss of Reactor Coolant Pump Makeup: How long PZR level can be maintained within limits	2.9	44
025 / Loss of Residual Heat Removal System / 4		X					AK2.03 - Knowledge of the interrelations between the Loss of Residual Heat Removal System and the following: Service water or closed cooling water pumps	2.7	45
027 / Pressurizer Pressure Control System Malfunction / 3	X						AK1.03 - Knowledge of the operational implications of the following concepts as they apply to Pressurizer Pressure Control Malfunctions: Latent heat of vaporization/condensation	2.6	46
029 / Anticipated Transient Without Scram (ATWS) / 1		X					EK2.06 - Knowledge of the interrelations between the and the following an ATWS: Breakers, relays, and disconnects	2.9	47
055 / Station Blackout / 6			X				EK3.02 - Knowledge of the reasons for the following responses as the apply to the Station Blackout: Actions contained in EOP for loss of offsite and onsite power	4.3	48

McGuire 2008 NRC Exam
Written Examination Outline
Emergency and Abnormal Plant Evolutions – Tier 1 Group 1

EAPE # / Name Safety Function	K1	K2	K3	A1	A2	G	K/A Topic(s)	Imp.	Q#
056 / Loss of Off-site Power / 6				X			AA1.12 - Ability to operate and / or monitor the following as they apply to the Loss of Offsite Power: Reactor building cooling unit	3.2	49
057 / Loss of Vital AC Electrical Instrument Bus / 6			X				AK3.01 - Knowledge of the reasons for the following responses as they apply to the Loss of Vital AC Instrument Bus: Actions contained in EOP for loss of vital ac electrical instrument bus	4.1	50
058 / Loss of DC Power / 6	X						AK1.01 - Knowledge of the operational implications of the following concepts as they apply to Loss of DC Power: Battery charger equipment and instrumentation	2.8	51
062 / Loss of Nuclear Service. Water / 4					X		AA2.06 - Ability to determine and interpret the following as they apply to the Loss of Nuclear Service Water: The length of time after the loss of CCW flow to a component before that component may be damaged	2.8	52
065 / Loss of Instrument Air / 8					X		AA2.08 - Ability to determine and interpret the following as they apply to the Loss of Instrument Air: Failure modes of air-operated equipment	2.9	53
E04 / LOCA Outside Containment / 3	X						EK1.2 - Knowledge of the operational implications of the following concepts as they apply to the (LOCA Outside Containment): Normal, abnormal and emergency operating procedures associated with (LOCA Outside Containment).	3.5	54
E11 / Loss of Emergency Coolant Recirculation / 4						X	2.1.23 - Conduct of Operations: Ability to perform specific system and integrated plant procedures during all modes of plant operation.	4.3	55
E12 / Uncontrolled Depressurization of all Steam Generators / 4						X	2.1.20 - Conduct of Operations: Ability to interpret and execute procedure steps.	4.6	56
K/A Category Totals:	3	3	3	3	6	6	Group Point Total:		18/6

McGuire 2008 NRC Exam
Written Examination Outline
Emergency and Abnormal Plant Evolutions – Tier 1 Group 2

EAPE # / Name Safety Function	K1	K2	K3	A1	A2	G	K/A Topic(s)	Imp.	Q#
003 / Dropped Control Rod / 1					X		AA2.02 - Ability to determine and interpret the following as they apply to the Dropped Control Rod: Signal inputs to rod control system	2.8	82
033 / Loss of Intermediate Range Nuclear Instrumentation / 7					X		AA2.05 - Ability to determine and interpret the following as they apply to the Loss of Intermediate Range Nuclear Instrumentation: Nature of abnormality, from rapid survey of control room data	3.1	83
059 / Accidental Liquid RadWaste Release / 9						X	2.2.38 - Equipment Control: Knowledge of conditions and limitations in the facility license.	4.5	84
E06 / Degraded Core Cooling / 4						X	2.1.20 - Conduct of Operations: Ability to interpret and execute procedure steps.	4.6	85
005 / Inoperable/Stuck Control Rod / 1				X			AA1.02 - Ability to operate and / or monitor the following as they apply to the Inoperable / Stuck Control Rod: Rod selection switches	3.7	57
024 / Emergency Boration / 1					X		AA2.03 - Ability to determine and interpret the following as they apply to the Emergency Boration: Correlation between boric acid controller setpoint and boric acid flow	2.9	58
032 / Loss of Source Range Nuclear Instrumentation / 7	X						AK1.01 - Knowledge of the operational implications of the following concepts as Effects of voltage changes on performance	2.5	59
033 / Loss of Intermediate Range Nuclear Instrumentation / 7				X			AA1.02 - Ability to operate and / or monitor the following as they apply to the Loss of Intermediate Range Nuclear Instrumentation: Level trip bypass	3.0	60
036 / Fuel Handling Incidents / 8		X					AK2.01 - Knowledge of the interrelations between the Fuel Handling Incidents and the following: Fuel handling equipment	2.9	61
067 / Plant Fire On-site / 8					X		AA2.12 - Ability to determine and interpret the following as they apply to the Plant Fire on Site: Location of vital equipment within fire zone	2.9	62
069 / Loss of Containment Integrity / 5			X				AK3.01 - Knowledge of the reasons for the following responses as they apply to the Loss of Containment Integrity: Guidance contained in EOP for loss of containment integrity	3.8	63
076 / High Reactor Coolant Activity / 9		X					AK2.01 - Knowledge of the interrelations between the High Reactor Coolant Activity and the following: Process radiation monitors	2.6	64
E02 / SI Termination / 3						X	2.4.8 - Emergency Procedures / Plan: Knowledge of how abnormal operating procedures are used in conjunction with EOP's.	3.8	65
K/A Category Totals:	1	2	1	2	4	3	Group Point Total:		9/4

McGuire 2008 NRC Exam
Written Examination Outline
Plant Systems – Tier 2 Group 1

System # / Name	K 1	K 2	K 3	K 4	K 5	K 6	A 1	A 2	A 3	A 4	G		Imp.	Q #
010 Pressurizer Pressure Control								X				A2.01 - Ability to (a) predict the impacts of the following malfunctions or operations on the PZR PCS; and (b) based on those predictions, use procedures to correct, control, or mitigate the consequences of those malfunctions or operations: Heater failures	3.6	86
026 Containment Spray								X				A2.03 - Ability to (a) predict the impacts of the following malfunctions or operations on the CSS; and (b) based on those predictions, use procedures to correct, control, or mitigate the consequences of those malfunctions or operations: Failure of ESF	4.4	87
061 Auxillary/Emergency Feedwater											X	2.4.4 - Emergency Procedures / Plan: Ability to recognize abnormal indications for system operating parameters which are entry-level conditions for emergency and abnormal operating procedures.	4.7	88
073 Process Radiation Monitoring											X	2.2.22 - Equipment Control: Knowledge of limiting conditions for operations and safety limits	4.7	89
076 Service Water								X				A2.02 - Ability to (a) predict the impacts of the following malfunctions or operations on the SWS; and (b) based on those predictions, use procedures to correct, control, or mitigate the consequences of those malfunctions or operations: Service water header pressure	3.1	90
003 Reactor Coolant Pump	X											K1.08 - Knowledge of the physical connections and/or cause-effect relationships between the RCPS and the following systems: Containment isolation	2.7	1
004 Chemical and Volume Control					X							K5.46 - Knowledge of the operational implications of the following concepts as they apply to the CVCS: Reason for going solid in PZR (collapsing steam bubble): make sure no steam is in PRT when PORV is opened to drain RCS	2.5	2
005 Residual Heat Removal		X										K2.03 - Knowledge of bus power supplies to the following: RCS pressure boundary motor-operated valves	2.7	3
006 Emergency Core Cooling										X		A4.01 - Ability to manually operate and/or monitor in the control room: Pumps	4.1	4
007 Pressurizer Relief/Quench Tank									X			A3.01 - Ability to monitor automatic operation of the PRTS, including: Components which discharge to the PRT	2.7	5
008 Component Cooling Water		X										K2.02 - Knowledge of bus power supplies to the following: CCW pump, including emergency backup	3.0	6
008 Component Cooling Water				X								K4.01 - Knowledge of CCWS design feature(s) and/or interlock(s) which provide for the following: Automatic start of standby pump	3.1	7

McGuire 2008 NRC Exam
Written Examination Outline
Plant Systems – Tier 2 Group 1

System # / Name	K 1	K 2	K 3	K 4	K 5	K 6	A 1	A 2	A 3	A 4	G		Imp.	Q #
010 Pressurizer Pressure Control	X											K1.07 - Knowledge of the physical connections and/or cause-effect relationships between the PZR PCS and the following systems: Containment	2.9	8
012 Reactor Protection									X			A3.03 - Ability to monitor automatic operation of the RPS, including: Power supply	3.4	9
012 Reactor Protection						X						K6.03 - Knowledge of the effect of a loss or malfunction of the following will have on the RPS: Trip logic circuits	3.3	10
013 Engineered Safety Features Actuation				X								K4.08 - Knowledge of ESFAS design feature(s) and/or interlock(s) which provide for the following Redundancy	3.1	11
022 Containment Cooling								X				A2.05 - Ability to (a) predict the impacts of the following malfunctions or operations on the CCS; and (b) based on those predictions, use procedures to correct, control, or mitigate the consequences of those malfunctions or operations: Major leak in CCS	3.1	12
025 Ice Condenser						X						K6.01 - Knowledge of the effect of a loss or malfunction of the following will have on the ice condenser system: Upper and lower doors of the ice condenser	3.4	13
025 Ice Condenser					X							K5 01 - Knowledge of operational implications of the following concepts as they apply to the ice condenser system: Relationships between pressure and temperature	3.0	14
026 Containment Spray											X	2.2.22 - Equipment Control: Knowledge of limiting conditions for operations and safety limits.	4.0	15
026 Containment Spray			X									K3.02 - Knowledge of the effect that a loss or malfunction of the CSS will have on the following: Recirculation spray system	4.2	16
039 Main and Reheat Steam										X		A4.04 - Ability to manually operate and/or monitor in the control room: Emergency feedwater pump turbines	3.8	17
039 Main and Reheat Steam				X								K4.07 - Knowledge of MRSS design feature(s) and/or interlock(s) which provide for the following: Reactor building isolation	3.4	18
059 Main Feedwater							X					A1.03 - Ability to predict and/or monitor changes in parameters (to prevent exceeding design limits) associated with operating the MFW controls including: Power level restrictions for operation of MFW pumps and valves.	2.7	19
061 Auxillary/Emergency Feedwater			X									K3.01 - Knowledge of the effect that a loss or malfunction of the AFW will have on the following: RCS	4.4	20
062 AC Electrical Distribution									X			A3.05 - Ability to monitor automatic operation of the ac distribution system, including: Safety-related indicators and controls	3.5	21
063 DC Electrical Distribution							X					A1.01 - Ability to predict and/or monitor changes in parameters associated with operating the dc electrical system controls including: Battery capacity as it is affected by discharge rate	2.5	22

McGuire 2008 NRC Exam
Written Examination Outline
Plant Systems – Tier 2 Group 1

System # / Name	K 1	K 2	K 3	K 4	K 5	K 6	A 1	A 2	A 3	A 4	G		Imp.	Q #
064 Emergency Diesel Generator						X						K6.08 - Knowledge of the effect of a loss or malfunction of the following will have on the ED/G system: Fuel oil storage tanks	3.2	23
073 Process Radiation Monitoring								X				A2.01 - Ability to (a) predict the impacts of the following malfunctions or operations on the PRM system; and (b) based on those predictions, use procedures to correct, control, or mitigate the consequences of those malfunctions or operations: Erratic or failed power supply	2.5	24
076 Service Water											X	2.4.30 - Emergency Procedures / Plan; Knowledge of events related to system operation / status that must be reported to internal organizations or external agencies, such as the state, the NRC, or the transmission system operator.	2.7	25
076 Service Water			X									K3.07 - Knowledge of the effect that a loss or malfunction of the SWS will have on the following: ESF loads	3.7	26
078 Instrument Air											X	2.4.35 - Emergency Procedures / Plan: Knowledge of local auxiliary operator tasks during emergency and the resultant operational effects.	3.8	27
103 Containment										X		A4.01 - Ability to manually operate and/or monitor in the control room: Flow control, pressure control, and temperature control valves, including pneumatic valve controller	3.2	28
K/A Category Totals:	2	2	3	3	2	3	2	5	3	3	5	Group Point Total:		28/5

McGuire 2008 NRC Exam
Written Examination Outline
Plant Systems – Tier 2 Group 2

System # / Name	K 1	K 2	K 3	K 4	K 5	K 6	A 1	A 2	A 3	A 4	G		Imp.	Q #
015 Nuclear Instrumentation											X	2.1.7 - Conduct of Operations: Ability to evaluate plant performance and make operational judgments based on operating characteristics, reactor behavior, and instrument interpretation.	4.7	91
028 Hydrogen Recombiner and Purge Control								X				A2.03 - Ability to (a) predict the impacts of the following malfunctions or operations on the HRPS; and (b) based on those predictions, use Procedures to correct, control, or mitigate the consequences of those malfunctions or operations: The hydrogen air concentration in excess of limit flame propagation or detonation with resulting equipment dam-age in containment	4.0	92
079 Station Air								X				A2.01 - Ability to (a) predict the impacts of the following malfunctions or operations on the SAS; and (b) based on those predictions, use Procedures to correct, control, or mitigate the consequences of those malfunctions or operations:: Cross-connection with IAS	3.2	93
014 Rod Position Indication				X								K4.03 - Knowledge of RPIS design feature(s) and/or interlock(s) which provide for the following: Rod Bottom lights	3.2	29
017 In-core Temperature Monitor						X						K6.01 - Knowledge of the effect of a loss or malfunction of the following ITM system components: Sensors and detectors	2.7	30
015 Nuclear Instrumentation System		X										K2.01 - Knowledge of bus power supplies to the following: NIS channels, components, and interconnections	3.3	31
028 Hydrogen Recombiner and Purge Control	X											K1.01 - Knowledge of the physical connections and/or cause-effect relationships between the HRPS and the following systems: Containment annulus ventilation system (including pressure limits)	2.5	32
029 Containment Purge										X		A4.04 - Ability to manually operate and/or monitor in the control room: Containment Evacuation signal	3.5	33
033 Spent Fuel Pool Cooling			X									K3.01 - Knowledge of the effect that a loss or malfunction of the Spent Fuel Pool Cooling System will have on the following: Area ventilation systems	2.6	34
035 Steam Generator								X				A2.05 - Ability to (a) predict the impacts of the following malfunctions or operations on the S/GS; and (b) based on those predictions, use procedures to correct, control, or mitigate the consequences of those malfunctions or operations: Unbalanced flows to the S/Gs	3.2	35
041 Steam Dump/Turbine Bypass Control									X			A3.03 - Ability to monitor automatic operation of the SDS, including: Steam flow	2.7	36

McGuire 2008 NRC Exam
Written Examination Outline
Plant Systems – Tier 2 Group 2

System # / Name	K 1	K 2	K 3	K 4	K 5	K 6	A 1	A 2	A 3	A 4	G		Imp.	Q #
071 Waste Gas Disposal							X					A1.06 - Ability to predict and/or monitor changes in parameters(to prevent exceeding design limits) associated with Waste Gas Disposal System operating the controls including: Ventilation system	2.5	37
086 Fire Protection					X							K5.03 - Knowledge of the operational implication of the following concepts as they apply to the Fire Protection System: Effect of water spray on electrical components	3.1	38
K/A Category Totals:	1	1	1	1	1	1	1	3	1	1	1	Group Point Total:	12/3	

Facility:	McGuire 2008 NRC Exam	Date:	5/12/2008			
Category	K/A #	Topic	RO		SRO-Only	
			IR	Q#	IR	Q#
1. Conduct of Operations	2.1.35	Knowledge of the fuel-handling responsibilities of SRO's.			3.9	94
	2.1.18	Ability to make accurate, clear and concise logs, records, status boards, and reports.	3.6	66		
	2.1.13	Knowledge of facility requirements for controlling vital / controlled access.	2.5	67		
	2.1.8	Ability to coordinate personnel activities outside the control room.	3.4	68		
	Subtotal			3		1
2. Equipment Control	2.2.7	Knowledge of the process for conducting special or infrequent tests.			3.6	95
	2.2.22	Knowledge of limiting conditions for operations and safety limits.			4.7	96
	2.2.40	Ability to apply technical specifications for a system.	3.4	69		
	2.2.13	Knowledge of tagging and clearance procedures.	4.1	70		
	2.2.6	Knowledge of the process for making changes to procedures.	3.0	71		
	Subtotal			3		2
3. Radiation Control	2.3.14	Knowledge of radiation or containment hazards that may arise during normal, abnormal, or emergency conditions or activities.			3.8	97
	2.3.6	Ability to approve release permits			3.8	98
	2.3.4	Knowledge of radiation exposure limits under normal or emergency conditions.	3.2	72		
	2.3.11	Ability to control radiation releases.	3.8	73		
	Subtotal			2		2
4. Emergency Procedures / Plan	2.4.46	Ability to verify that the alarms are consistent with the plant conditions.			4.2	99
	2.4.8	Knowledge of how abnormal operating procedures are used in conjunction with EOP's.			4.5	100
	2.4.17	Knowledge of EOP terms and definitions.	3.9	74		
	2.4.14	Knowledge of general guidelines for EOP usage.	3.8	75		
	Subtotal			2		2
Tier 3 Point Total				10		7

Tier / Group	Randomly Selected K/A	Reason for Rejection
2 / 2	015 G2.1.34	Q 91 Generic topic selected provided no relationship with system selected. Randomly reselected G2.1.7
2 / 1	026 A2.01	Q 87 Procedures have no relationship to, and no guidance for, phenomenon related to topic. Randomly reselected A2.03
1 / 1	015 AA1.04	Q 43 Facility does not have selected component or indication. Randomly reselected AA1.16
2 / 2	029 A4.01	Q 33 Facility cannot operate or monitor purge flow rate from control room; can only start or stop fans. Randomly reselected A4.04
2 / 2	027 K2.01	Q 31 Facility does not have system or fans provided specifically for iodine removal. Kept K2 category and randomly reselected system 015
2 / 2	014 K4.02	Q 29 Lower Electrical Limit is CE, not applicable to WEC design. Randomly reselected K4.03
2 / 1	012 K6.07	Q 10 Facility does not have Core Protection Calculators, CE design. Randomly reselected K6.03
2 / 1	008 K4.07	Q 7 Facility does not have swing pump breaker. Randomly reselected K4.01
1 / 1	055 EA2.05	Q 79 Excessive topic overlap with RO examination related to DC distribution. References did not support an SRO level test item without excessive overlap. Randomly reselected EA2.03 from 055 topic area.
1 / 1	058 G2.4.21	Q 81 Facility and generic references did not support any test item directly related to KA topic. Topic selected could not be tested at SRO level in either closed or open reference format. Randomly reselected Generic topic 2.2.37 from required Tier 1 and Tier 2 generic topics for 058 topic area.
2 / 1	073 G2.2.4	Q 89 Facility has no difference in system between units that could be developed into a test item, either at RO or SRO level. Randomly reselected generic 2.2.22 from required Tier 1 and Tier 2 generic topics for 073 topic area

Examination Outline Cross-reference:	Level	RO	SRO
	Tier #	2	
	Group #	1	
	K/A #	003 K1.08	
	Importance Rating	2.7	

(Knowledge of the physical connections and/or cause-effect relationships between the RCPs and the following systems: Containment isolation)

Proposed Question: Common 1

With Unit 1 at 100% power the following occurs:

- A leak in the Letdown Line develops outside Containment.
- NC Pressure drops to 1825 psig and stabilizes.

All systems operate as designed.

Which ONE (1) of the following describes the effect of this event on the Reactor Coolant Pump (NCP) support systems?

A. RN and KC flow to and from the NCPs, Seal Water return flow from the NCPs have been isolated.

B. RN and KC flow to and from the NCPs continues, Seal Water return flow from the NCPs has been isolated.

C. Seal Water return flow from the NCPs continues, RN and KC flow to and from the NCPs has been isolated.

D. RN and KC flow to and from the NCPs, Seal Water return flow from the NCPs continues.

Proposed Answer: **B**

Explanation (Optional):

A. Incorrect. Correct if Phase A and Phase B have actuated.

B. Correct. The RN and KC supply and return, as well as the Seal Water return lines have Containment Isolation Valves that will close, isolating NCP support systems under certain conditions. The Seal Water return line is isolated under a Phase A Containment Isolation condition, while the RN and KC supply and return lines are isolated under a Phase B Containment

Isolation condition. Plant conditions indicate that a Safety Injection signal has occurred due to low pressurizer pressure (1845 psig). Phase A Containment Isolation occurs on any Safety Injection signal or by manual actuation. Phase B Containment Isolation occurs on a Hi-Hi Containment Pressure Signal, or by manual action. The actuation of the Safety Injection signal causes a Containment Isolation Phase A. However, Containment Isolation Phase B will not occur because the LOCA is outside Containment. Therefore, only the Sealwater return line will isolate, while the RN/KC lines will remain unisolated. B is correct.

C. Incorrect. Correct only if Containment Phase B is manually or spuriously actuated, without Containment Phase A.

D. Incorrect. Correct only if Phase A fails to actuate.

Technical Reference(s)	OP-MC-ECC-ISE (p15, 21, 29, &51). Rev.30	(Attach if not previously provided)
	OP-MC-PS-NV (p41, 123) Rev. 55	(Including version or revision #)

Proposed references to be provided to applicants during examination: None

Learning Objective: ECC-ISE(#4,5,6), PS-NCP (#7), CNT-CNT (#4) (As available)

Question Source:	Bank #		
	Modified Bank #		(Note changes or attach parent)
	New	X	

Question History: Last NRC Exam NA

Question Cognitive Level:	Memory or Fundamental Knowledge	
	Comprehension or Analysis	X

10 CFR Part 55 Content:	55.41	3, 8
	55.43	

Comments:

KA is matched because SI has occurred, which actuates Containment Isolation Phase A. Phase A isolates certain NCP components

If a transmitter fails during an accident, this could prevent actuation of its associated equipment. Therefore, a > 0.35 psig signal can be simulated via a test key switch and potentiometer. The key switches are located on the CPCS cabinets and the potentiometers are located in the CPCS cabinets. Train A CPCS cabinet (CPCC1) is located in Electrical Penetration Rm (750'). Train B CPCS cabinet (CPCC2) is located in Electrical Penetration Rm (733').

The NS pumps and NS discharge valves, VX return air fans/H_2 skimmer fans and Air Return damper circuits are interlocked such that if one is in test, the other test circuit is inhibited. This ensures NS and VX termination once containment pressure drops below 0.35 psig while a circuit is in test with a potentiometer simulating greater than 0.35 psig. This testing scheme will also help prevent inadvertent spray actuation.

Objective # 4

The following abbreviated terms are used to designate system components that receive an ESS signal.

S_s Safety Injection

S_t Phase "A" Isolation

S_P Phase "B" Isolation

S_H Containment Ventilation Isolation

2.1 Safety Signal Setpoints

Objective # 5

Safety Injection (S_S)

- **Lo-Pressurizer Pressure**
- **Hi Containment Pressure**
- **Manual**

Phase "A" Isolation Signal

- **Safety Injection (any of 3 signals)**
- **Manual**

Containment Spray (NS)

- **Hi Hi Containment Pressure (S_p) with CPCS**
- **Manual with CPCS**

Phase "B" Containment Isolation

- **Hi Hi Containment Pressure (S_p)**
- **Manual**

3.0 SYSTEM OPERATION

3.1 Normal Operation

Objective # 6

Safety Injection Actuation (S_S)

Actuation Signals and logic

Signal	Setpoint	Logic	Interlocks	Reason
Manual		$^1/_2$ pushbuttons		Operator Judgment
Lo-pressurizer pressure	<1845 psig	$^2/_4$ channels	P-11	LOCA Protection
Hi-containment pressure	>1.0 psig	$^2/_3$ channels		LOCA and Steam Break Protection

LOCA protection is provided by the Low Pressurizer Pressure (1845 psig) and the High Containment Pressure (1 psig) Safety Injection Signals.

Steam break protection is provided by the High Containment Pressure (1 psig) Safety Injection Signal.

Objective # 7

Safety Injection Signal (S_S) initiates the following functions:

- Reactor Trip (P4)
- D/G sequencer which in turn starts the following:
  1) **Centrifugal Charging Pumps (NV)**
  2) **Safety Injection Pumps (NI)**
  3) **Residual Heat Removal Pumps (ND)**
  4) **Idle train of Component Cooling Pumps (KC)**
  5) **Idle train of Nuclear Service Water Pumps (RN)**
  6) **Motor Driven Auxiliary Feedwater Pumps (CA)**
  7) Emergency Diesel Generator
  8) Provides start signal to normally running auxiliary building filtered exhaust fans and trips non-filtered exhaust fans

Objective # 13

Phase "B" Containment Isolation is actuated by:

Hi Hi Containment Pressure	**> 3.0 psig on $^2/_4$ channels**
Manually	**$^1/_2$ pushbuttons**

Phase B actuation secures Component Cooling Water (KC) to the Reactor Coolant pumps, Nuclear Service Water (RN) to the Reactor Coolant Pump Motor Coolers, Containment Ventilation Cooling Water (RV) and Instrument Air (VI) to the containment.

Phase "B" can be reset with signal still present, once resets are pushed, we regain control of valves that close on the Phase "B" signal.

Containment Ventilation Isolation (S_H) is initiated by any of the following:

- **Safety Injection (S_S)**
- **Manual Phase "A" (S_t)**
- **Manual NS/Phase "B"**
- **Trip 2 alarm on EMF-38, 39, or 40**

Containment Ventilation Isolation (S_H) signal secures VQ and VP.

To "Reset" Containment Ventilation Isolation following a Safety Injection, Manual Phase "A", or Manual Phase "B", the Containment Ventilation (S_H) "Reset" Pushbuttons must be depressed (can reset without resetting the initiating signal).

To "Reset" Containment Ventilation following an EMF 38, 39, 40 Trip II, the EMF must be reset, then the Containment Ventilation "Reset Pushbuttons must be depressed.

NOTE: Resetting the S_H signal will allow manual control of VQ valves. VQ valves do not have an auto function.

Annulus Ventilation System (VE) start maintains negative pressure in annulus. It is actuated automatically by a Hi Hi Containment pressure signal or manually by either depressing Manual "NS/Phase B" Pushbutton or placing VE (Annulus Ventilation) to "ON".

To reset the start signal we must reset the Phase "B" isolation, then, place VE (Annulus Ventilation) fan switch to "Reset" and place back in "auto".

H_2 Skimmer and Air Return Fan (VX) starts on a Hi Hi Containment Pressure (S_P) with CPCS or Manually by NS/Phase B pushbutton and CPCS after a 10 minute time delay.

7.3 Containment Isolation Signals (1/27/98)

PHASE "A" ISOLATION

ANY SAFETY INJECTION SIGNAL
OR
MANUAL

PHASE "B" ISOLATION

HI HI CONTAINMENT PRESSURE > 3.0 PSIG ON 2/4 CHANNELS
OR
MANUAL

CONTAINMENT VENTILATION ISOLATION

ANY SAFETY INJECTION SIGNAL
Or
MANUAL PHASE "A" ISOLATION
Or
MANUAL PHASE "B" ISOLATION
or
EMF 38, 39 OR 40

Leakage past the No. 1 seal supplies the No. 2 seal with water. The pressure on the No. 2 seal is the summation of the flow resistances in the seal water return lines and the VCT pressure. Approximately 3 gph will pass through the No. 2 seal. A standpipe is provided to ensure a back pressure of at least 7 feet of water on the No. 2 seal and warn of excessive No. 2 seal leakage. The first outlet from the standpipe has an orifice to permit normal No. 2 seal leakage to flow to the Reactor Coolant Drain Tank (NCDT); excessive No. 2 leakage results in a rise in standpipe level and, eventually, overflow to the NCDT via a second overflow connection.

No. 1 seal bypass flow can be used during NCS pressure between 100# and 1000#. This ensures an adequate flow to cool the radial bearing during low seal flow conditions.

NOTE: There are other parameters that must be met prior to the bypass of the No. 1 seal. Refer to OP-MC-PS-NCP, Reactor Coolant Pump and Motor (NCP) lesson plan.

The seal water return flow then goes through the containment isolation valves (NV-94AC, inside containment, & NV-95B, outside containment). These valves will automatically close on a Phase "A" Containment Isolation (S_t). The inside containment isolation valve, NV-94AC, can also be controlled from the SSF. A relief valve, NV-96, relieves trapped pressure from the containment penetration back to the upstream side of NV-94AC. The seal return line, inside containment, is protected from overpressure by a relief valve, NV-93, when the line is isolated. The setpoint is 150 psig and the valve relieves to the PRT. The flow then enters the seal water return filter, which collects particulates. In addition to the seal return flow, the excess letdown flow also goes through the seal return filter.

The filter is designed for maximum seal leakage flow and excess letdown flow. This combined flow now enters the tube side of the seal water heat exchanger along with the CCP recirculation mini-flow. The seal water heat exchanger is cooled by Component Cooling (KC) water circulated through shell side of the heat exchanger.

2.17 Excess Letdown

Objective # 5

Excess letdown is provided in the event that normal letdown is unavailable, to help maintain a constant NC inventory / PZR level. The flow comes from the NC Loop C Cold Leg through NV-24B and NV-25B, which can also be controlled from the ASP. The flow then goes through the excess letdown heat exchanger and then through NV-26. A manual loader, for flow control, controls NV-26, which can also be controlled from the ASP. NCS flow is through the tube side (outlet temperature ≈ 165°F) and Component Cooling (KC) water flows through the shell side. The excess letdown discharges to NV-27B, which controls the flow path to be taken, either the NCDT or the seal return to the VCT (normal flow path). NV-27B is controlled from the Control Room and will fail to the VCT position on Loss of Air.

The excess letdown flow of ≈ 20 gpm provides the capability to letdown the seal injection flow entering the NCS of ≈ 5 gpm per pump (≈ 20 gpm).

7.0 DRAWINGS

7.1 NV System Composite (1/28/03)

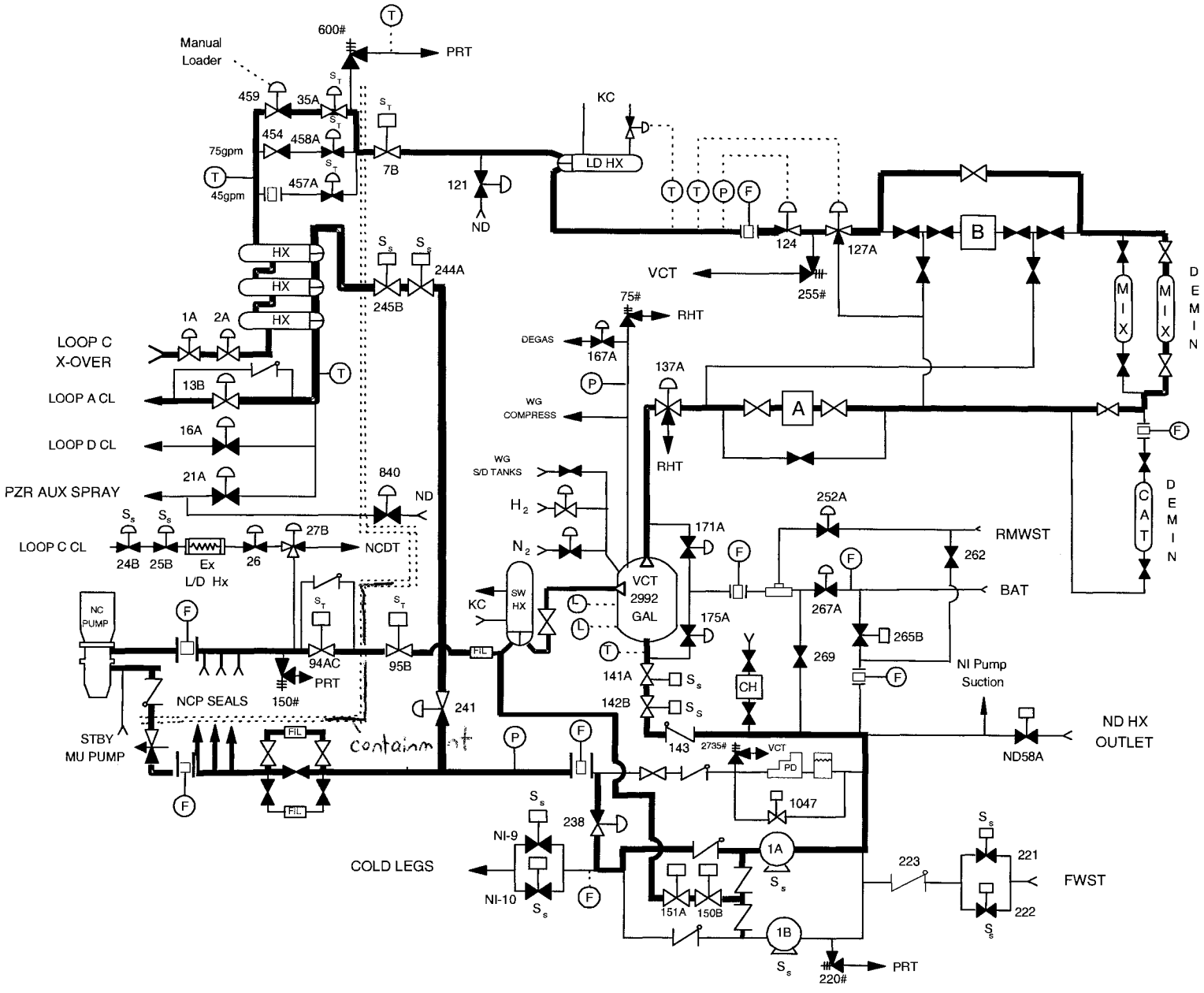

CLASSROOM TIME (Hours)

NLO	NLOR	LPRO	LPSO	LOR
2.5	1.5	1.5	1.5	1.5

OBJECTIVES

	OBJECTIVE	NLO	NLOR	LPRO	LPSO	LOR
1	State the purpose of the Engineered Safeguards System.	X	X	X	X	
2	Explain the need and reasoning behind the redundancy requirements for two trains of safety related systems.	X	X	X	X	
3	State how the operator would be aware if more than one protection cabinet door was opened simultaneously.			X	X	X
4	Define the following terms: S_s, S_t, S_P, S_H	X	X	X	X	
5	List the conditions that will initiate the following: • Safety Injection (S_s) • Phase "A" Isolation (S_t) • Containment Spray/Phase "B" Isolation (S_P) • Containment Ventilation Isolation (S_H) • Main Steam Isolation (MSI) • Main Feedwater Isolation (FWI) • VE (Annulus Ventilation) System Start • H_2 Skimmer and Air Return Fan Start (VX)	X	X			
6	List all Safety Injection (S_s) actuation signals, setpoints, logic, and the type of accident each signal provides protection for.	X	X	X	X	X
7	List the pumps that automatically start following a safety injection actuation.	X	X	X	X	X
8	State which Safety Injection (S_s) signal can be blocked.	X	X	X	X	X
9	Explain the reason for blocking a Safety Injection (S_s) signal.	X	X	X	X	X
10	List the interlock and parameter setpoint that allows blocking Safety Injection (S_s).	X	X	X	X	X
11	Describe the operator action needed to block Safety Injection.			X	X	X
12	List the conditions that allow RESET of Safety Injection.			X	X	X

CLASSROOM TIME (Hours)

NLO	NLOR	LPRO	LPSO	LOR
2.0	2.0	3.0	3.0	

OBJECTIVES

	OBJECTIVE	NLO	NLOR	LPRO	LPSO	LOR
1	Concerning the Reactor Coolant Pumps/Motors: • State the purpose of the Reactor Coolant Pump. • State the purpose of the motor flywheel. • State the purpose of the NC Pump thermal barrier and heat exchanger. • State the purpose of the NC Pump Motor Oil Lift System. • State the purpose of the NC Pump seals.	X	X	X	X	
2	Discuss the basic operation of the Anti Reverse Rotation Device associated with each motor.	X	X	X	X	
3	Describe two reasons for using an Anti Reverse Rotation Device on a NC Pump.		X	X	X	X
4	Discuss any operational concerns with: • Loss of Thermal Barrier Heat Exchanger flow while maintaining Seal Injection flow • Loss of Seal Injection flow while maintaining Thermal Barrier Heat Exchanger flow. • Loss of Seal Injection with a loss of Thermal Barrier Heat Exchanger flow.	X	X	X	X	X
5	Describe the operation of the Thrust Bearing including how it functions as a pump to move oil through the oil cooler.	X	X	X	X	
6	Concerning the Oil Lift Pumps: • Explain the normal start/stop operation • Describe what happens to the running Oil Lift Pump if the associated NCP failed to start? (Safety breaker re-opens)		X	X	X	X
7	Discuss the various cooling water supplies to the Reactor Coolant Pump and Motor and the origin of each supply.	X	X	X	X	

CLASSROOM TIME (Hours)

NLO	NLOR	LPRO	LPSO	LOR
3	1	2.5	2.5	2

OBJECTIVES

SEQ	OBJECTIVE	NLO	NLOR	LPRO	LPSO	LOR
1	State the purpose of the Containment System.	X		X	X	
2	Describe how the Containment System limits the release of fission products from containment to the environment.	X		X	X	
3	Concerning the design criteria for the steel containment vessel. • State the maximum internal and external pressures. • Describe the accidents on which the maximum internal and external pressures are based.	X		X	X	
4	For the Containment Isolation system:					
	• State the purpose	X		X	X	
	• Describe the operation	X	X	X	X	
5	For the Emergency Hydrogen Mitigation System:					
	• State the purpose	X		X	X	
	• Describe the operation	X	X	X	X	X

Examination Outline Cross-reference:	Level	RO	SRO
	Tier #	2	
	Group #	1	
	K/A #	004 K5.46	
	Importance Rating	2.5	

(Knowledge of the operational implications of the following concepts as they apply to the CVCS: Reason for going solid in PZR (collapsing steam bubble): make sure no steam is in PRT when PORV is opened to drain RCS)

Proposed Question: Common 2

Unit 2 is collapsing the PZR steam bubble and placing the PZR in a water solid condition in accordance with OP/2/A/6100/SD-8, Water Solid Operations.

Which ONE (1) of the following describes the reason for placing the PZR in a water-solid condition?

A. Facilitate placing LTOP in service.

B. Maintain adequate NC Pump seal DP.

C. Maintain NC System cooldown rate within limits.

D. Facilitate degasification of the NC System.

Proposed Answer: **D**

Explanation (Optional):

A. Incorrect. LTOP will be in service while PZR is solid, but this is not the reason for placing the plant in a solid condition

B. Incorrect. If RCPs are operating, adequate seal DP must be maintained, but it may be maintained whether solid or with a bubble in the PZR

C. Incorrect. Whether solid or on a bubble cooldown rate must be maintained.

D. Correct. Phase 2 degas is performed after PZR is water solid

Technical Reference(s)		
	OP/1/A/6100/SD-8 Rev 21	(Attach if not previously provided)
	SNO-P05, Rev 19	(Including version or revision #)

Proposed references to be provided to applicants during examination: None

Learning Objective: P05 #18, 21, 26, 29 (As available)

Question Source:
- Bank # _____
- Modified Bank # _____ (Note changes or attach parent)
- New X

Question History: Last NRC Exam NA

Question Cognitive Level:
- Memory or Fundamental Knowledge X
- Comprehension or Analysis _____

10 CFR Part 55 Content:
- 55.41 10, 14
- 55.43 _____

Comments:
KA is matched because item evaluates knowledge of the reason for going solid in the PZR. Item after information in parenthesis for KA does not apply to facility.

2. Initial Conditions

_____ 2.1 NC System temperature is less than 240°F.

3. Procedure

☐ 3.1 Evaluate all outstanding R&Rs that may impact performance of this procedure.

3.2 Check the following:

☐ All operable Core Exit Thermocouples are less than 240°F
☐ All NC loop temperatures are less than 240°F

NOTE: Maintaining a bubble in Pzr aids in NC System degassing. Consult with Primary Chemistry personnel to determine optimum time to bring Pzr water solid.

_____ 3.3 Notify Primary Chemistry that Operations is prepared to take PZR to a water solid condition.

_____ _____/_____
Person Notified Date Time

☐ 3.4 Maintain Pzr liquid temperature at saturation temperature for Pzr pressure while taking Pzr water solid.

5.1 Exercise Objectives (Page 2 of 4)

OBJECTIVES	LPRO	LPSO
11. Perform NC System cooldown to 240°F per OP/1/A/6100/SD-4, Cooldown to 240°F. SXNOP05011	X	X
12. Explain why the NC System must be less than or equal to 385 PSID and less than or equal to 350°F prior to placing the ND System in service. SXNOP05012	X	X
13. Place both ND trains in service during plant shutdown per OP/1/A/6100/SD-5, Recirc ND, OP/1/A/6100/SD-6A, Placing Train A ND in Service and OP/1/A/6100/SO-6, Placing the Second ND Train in Service. SXNOP05013	X	X
14. Explain why ND-1 and ND-2 supply breakers are locked in the open position during plant shutdown with ND in operation. SXNOP05014	X	X
15. Place the Pressurizer overpressure low temperature protection circuitry in service per OP/1/A/6100/SO-10, Controlling Procedure for LTOP Operation. SXNOP05015	X	X
16. Secure the S/G Blowdown System per OP/1/A/6250/008, Steam Generator Blowdown. SXNOP05016	X	X
17. Perform NC System cooldown to 200°F per OP/1/A/6100/SD-7, Cooldown to 200°F. SXNOP05017	X	X
18. Perform NC System solid operation per OP/1/A/6100/SD-8, Water Solid Operation. SXNOP05018	X	X
19. Perform OP/1/A/6100/SD-9, Bypass/Restoration of P-12 during plant shutdown. SXNOP05019	X	X
20. Perform OP/1/A/6100/SD-11, Mode 5 Checklist. SXNOP05020	X	X
21. Perform NC System cooldown to 100°F per OP/1/A/6100/SD-12, Cooldown to 100°F. SXNOP05021	X	X
22. Shift the ND System from parallel to single train operation per OP/1/A/6100/SU-14, Removing ND from System. SXNOP05022	X	X

5.1 Exercise Objectives (Page 3 of 4)

OBJECTIVES	LPRO	LPSO
23. Shift the KC System from parallel to single train operation per OP/1/A/6400/005, Component Cooling Water System. SXNOP05023	X	X
24. Perform VP System startup per OP/1/A/6100/SD-13, VP System Startup. SXNOP05024	X	X
25. Perform NC System crud burst per OP/1/A/6100/SD-14, Crud Burst. SXNOP05025	X	X
26. Prepare NC System for draining per OP/1/A/6100/SD-16, Preparing for NC System Drain. SXNOP05026	X	X
27. Perform S/G fill during plant shutdown per OP/1/A/6100/SO-4A(B)(C)(D), Filling S/G 1A(B)(C)(D) . SXNOP05027	X	X
28. Break condenser vacuum per OP/1/A/6100/SD-18, Break Vacuum. SXNOP05028	X	X
29. Drain the NC System per OP/1/A/6100/SD-20, Draining the NC System. SXNOP05029	X	X
30. Perform OP/1/A/6100/SD-21, Mode 6 Checklist. SXNOP05030	X	X
31. Maintain NC System level per OP/1/A/6100/SO-1, Maintaining NC System Level. SXNOP05031	X	X
32. Swap Operating trains of the ND System per OP/1/A/6100/SO-6, Placing the Second Train of ND in Service. SXNOP05032	X	X
33. Control NC System cooldown and depressurization per the McGuire Data Book Press-Temp Limitation Curve and document as required in PT/1/A/4600/009, Surveillance Requirements for Unit Cooldown. SXNOP05033	X	X
34. Diagnose and perform the required corrective actions for alarming Control Room annunciator(s) per the Alarm Response Manual. SXNOP05034	X	X
35. Demonstrate the ability to find and use the guidelines, tables, and curves in the McGuire Data Book as required during unit shutdown from hot standby to cold shutdown. SXNOP05035	X	X

Examination Outline Cross-reference:	Level	RO	SRO
	Tier #	2	
	Group #	1	
	K/A #	005 K2.03	
	Importance Rating	2.7	

(Knowledge of bus power supplies to the following: RCS pressure boundary motor-operated valves)

Proposed Question: Common 3

The following conditions exist on Unit 1:

- Plant shutdown and cooldown to 100°F is in progress.
- NC System temperature 180°F.
- Both trains of ND in service in accordance with station procedures.

Which ONE (1) of the following identifies the power supply to 1ND-1B and 1ND-2AC, "C NC Loop to ND Pump Isolation Valves," and the status of their motor breakers?

A. The valves are powered from Motor Control Centers powered by the **600V Unit Load Centers**, and the breakers are **OPEN**.

B. The valves are powered from Motor Control Centers powered by the **600V Unit Load Centers**, and the breakers are **CLOSED**.

C. The valves are powered from Motor Control Centers powered by the **600V Essential Load Centers**, and the breakers are **OPEN**.

D. The valves are powered from Motor Control Centers powered by the **600V Essential Load Centers**, and the breakers are **CLOSED**.

Proposed Answer: C

Explanation (Optional):

A. Incorrect. Wrong power supply.

B. Incorrect. Wrong power supply, wrong breaker position.

C. Correct. Page 21 of OP-MC-PS-ND (ND System Lesson Plan) indicates that these valves are capable of being closed during a Station Blackout or Loss of Offsite Power. This means that they must be powered by the Essential Power distribution buses. Page 23 states "The normal configuration is to remove power from 1ND-1B and 1ND-2AC after the Unit

has reached Mode 5 during shutdown. OP/1/A/6100/SD-12 identifies the breakers as 1EMXD-8D and 1EMXA/4-3C which are MCCs powered from the 600V Essential Load Centers, and tags the breakers open when the plant is in Mode during a cooldown to 100°F.

D. Incorrect. Correct power supply, wrong breaker position for given plant configuration.

Technical Reference(s)	OP/1/A/6100/SD-12, Rev 33	(Attach if not previously provided)
	OP-MC-PS-ND p19-23, Rev 37	(Including version or revision #)

Proposed references to be provided to applicants during examination: None

Learning Objective: OP-MC-PS-ND 5 (As available)

Question Source:

Bank #		
Modified Bank #		(Note changes or attach parent)
New	X	

Question History: Last NRC Exam NA

Question Cognitive Level:

Memory or Fundamental Knowledge	X
Comprehension or Analysis	

10 CFR Part 55 Content:

55.41	7, 10
55.43	

Comments:
KA is matched because item directly evaluates power source for MOVs, and further discriminates by asking breaker position

2.3 ND System Valves

Objective # 5

2.3.1 ND-1B (C NC Loop to ND Pumps) and ND-2AC (C NC Loop to ND Pumps)

Objective # 6, 7

These safety related motor operated valves (fail as is) are in series in the NCS to ND suction line. Either of these valves can isolate the ND System suction line from the NC System ("C" loop). Open/closed pushbuttons for these valves are located on MC11. These valves may also be controlled from the ASP by transferring control with the "C/R, LOCAL" selector switch. Valve status is provided to the OAC or ASP (after control transfer to ASP).

ND-1B can **not** be opened with the open pushbutton unless NC System WR Loop 'C' pressure is less than 385 psig (as sensed by NCPT5140) and **all** of the following valves are **closed**:

- **FW-27A (FWST Supply to ND)**
- **NI-184B (RB Sump to Train B ND & NS)**
- **NI-136B (B NI Pump Suction from ND)**
- **NS-38B (B ND to NS Cont. Outside Isol)**

ND-2AC can **not** be opened with its open pushbutton unless NC System WR Loop 'D' pressure is less than 385 psig (as sensed by NCPT5120) and **all** of the following valves are **closed**:

- **FW-27A (FWST Supply to ND)**
- **NI-185A (RB Sump to Train A ND & NS)**
- **ND-58A (Train A ND to NV & NI Pumps)**
- **NS-43A (A ND to NS Cont. Outside Isol)**

The interlocks on these valves ensure that:

- **the ND system is not over-pressurized as a result of opening the suction isolations with high NCS pressure.**
- the ND pump suctions will not be simultaneously crossed tied between the NCS, FWST and containment sump. With these valves open, the NCS and the FWST could be drained to the containment sump through ND-4B (B ND Pump Suction from FWST or NC) and ND-19A (A ND Pump Suction from FWST or NC).
- the ND pumps will not spray NCS fluid into containment through the auxiliary containment spray header.
- the NCS fluid will not be diverted from its normal residual heat removal flow path.

There are no automatic closure signals for ND-1B and ND-2AC. Annunciators on AD9, "ND-2A OPEN AND NC HI PRESS" and "ND-1B OPEN AND NC HI PRESS", will warn the operator if NCS pressure is 440 psig (or greater) with ND-1A or ND-2AC open/intermediate. The purpose of this annunciator is to alert the operator that a double barrier isolation between the NCS and ND systems does not exist when the plant is pressurized and **not** on ND cooling. Upon receipt of this alarm, the immediate operator action is to reduce NCS pressure until the alarm clears.

Objective #6

ND-1B and ND-2AC shall be closed with power removed while the ND system is aligned for standby readiness to prevent overpressurization of the ND system. Overpressure protection for the ND system is provided by the ND system suction relief valves which open at 450 psig and the ND to NCS cold leg and hot leg discharge relief valves which lift at 600 psig. Both suction and discharge relief valves discharge to the PRT.

Valve ND-2AC shall be capable of closing to isolate the NC pressure boundary during a station blackout event. ND-1B and ND-2AC shall be capable of opening following a loss of offsite power and station blackout to help cool the unit to a safe shutdown condition. ND-1B and ND-2AC may be controlled from the Auxiliary Shutdown panel following a control room evacuation, to help bring the unit to a safe shutdown condition. ND-2AC can also be operated from the Safe Shutdown Facility (SSF) Control Panel.

Portable motor starter and control stations are provided to control residual heat removal letdown valves after a postulated fire disables normal power supplies to these valves. The power operation of these valves with portable equipment is required to achieve cold shutdown without the need to enter containment to manually operate valves. Emergency power is obtained from motor control centers (MCC) located in the Diesel Generator rooms and is connected to the valves through normal containment penetrations. Portable power supplies and receiver gauges are used to monitor the reactor coolant system pressure should normal indications be lost. This is required by 10CFR50 Appendix R for fire damage control.

The single failure of ND-1B or ND-2AC could prevent the use of the residual heat removal system. Temporary motor starters and actuator hand-wheels are provided to enhance reliability, and low ND flow alarms are provided to alert the operators of system isolation. Additionally, Duke Power committed to have power removed from ND-1B and ND-2AC while the reactor head is unbolted and the refueling canal was filled, to reduce the possibility of a loss of ND suction (Ref. FSAR Question 212.72).

The normal system configuration is to remove power from ND-1B and ND-2AC after the Unit has reached Mode 5 during shutdown (while performing OP/1or 2/A/6100/SD-12, Cooldown to 100^0F). Maintaining power during Mode 4 allows the ND suction isolation valves to be operated from the control room while the NC system is a high energy system and ND piping has high thermal stresses, minimizing shutdown LOCA risk. Power is removed from the valves in Mode 5 to minimize the risk of a loss of ND event due to spurious valve movement. During plant startup, power is removed from ND-1B and ND-2AC after the unit has entered Mode 4 but prior to 350^0F while performing OP/1or 2/A/6100/SU-14 (Removing ND from Service).

The **OPERABILITY** requirements for these valves can be found in the DBD.

2.3.2 ND-4B (B ND Pump Suction From FWST Or NC) and ND-19A (A ND Pump Suction From FWST Or NC)

Objective #5

These valves are controlled from MC11 by open/close pushbuttons. They will auto close when their train related containment sump isolation valve fully opens (NI-184B and NI-185A). This interlock is designed to prevent the FWST from being drained to the containment sump.

ND-4B is interlocked so that it can not be opened unless the following valves are closed:

- **NS-38B (B ND to NS Cont. Outside Isol.) prevents NCS coolant from being pumped to the containment spray ring.**
- **NI-136B (B NI Pump Suction From ND) prevents NI system suction from being overpressurized**
- **NI-184B (RB Sump to Train B ND & NS) prevents FWST from being drained to the containment sump**
- **NS-1B (B NS Suct. From Cont Sump) prevents the NS System suction from being overpressurized.**

ND-19A is interlocked so that it cannot be opened unless the following valves are closed:

- **NS-43A (A ND to NS Cont. Outside Isol.) prevents NCS coolant from being pumped to the containment spray ring.**
- **ND-58A (Train A ND to NV & NI Pumps) prevents NV System suction overpressurization**
- **NI -185A (RB Sump to Train A ND & NS) prevents FWST from being drained to the containment sump**
- **NS-18A (A NS Pump From Cont Sump) prevent NS System suction overpressurization**

_____ 3.4 Defeat S/G Slave Relays per OP/1/A/6250/003 A (BW System).

_____ 3.5 Notify IAE to jumper S/G Lo-Lo Level Reactor Trip signals in 7300 cabinets per IP/0/A/3010/006 D (SSPS Outage Configuration And Power Supply Test).

_____ _____/_____
Person Notified Date Time

NOTE:	The following steps may be performed concurrently or in any order.

_____ 3.6 Notify Maintenance Coordinator to have flange installed at 1FW-76 (Unit 1 Refueling Cavity Flush Drn).

_____ _____/_____
Person Notified Date Time

3.7 Perform the following:

☐ 3.7.1 Notify designated Operator that the requirement to be capable of removing tag and racking in an NI Pump breaker within 15 minutes of dispatch is no longer in effect.

☐ 3.7.2 Delete this item from SRO Turnover Checklist.

3.8 Tag the following open:

☐ 1EMXD-8D (1ND-1B)
☐ 1EMXA4-3C (1ND-2A)

CLASSROOM TIME (Hours)

NLO	NLOR	LPRO	LPSO	LOR
2	2	2	2	1.5

OBJECTIVES

	OBJECTIVE	NLO	NLOR	LPRO	LPSO	LOR
1	Explain the purpose of the ND System. PSND001	X	X	X	X	
2	Sketch the ND System reflecting all major components and interconnections to associated systems (NC, NI, NS) per Drawing 7.1. PSND002	X	X	X	X	
3	Describe the instrumentation and alarms associated with the ND System. PSND003		X	X	X	X
4	List the power supplies for the ND pumps. PSND004	X	X	X	X	
5	Describe the operation of the following ND valves: • ND1B(2AC) - C Loop to ND Pump • ND4B (19A) - B(A) ND Pump Suction from FWST or NC • ND67B (68A) - B(A) ND Pump and B(A) ND HX Mini-Flow • ND15B (30A) - Train B(A) ND to Hot Leg Isolation • ND35 - ND System to FWST Isolation. PSND005		X	X	X	X
6	Explain overpressure protection for the ND System. PSND006		X	X	X	X
7	Explain the interlocks associated with the emergency auto-swap of ND pump suctions to the containment sump during an accident. PSND007	X	X	X	X	X

Examination Outline Cross-reference:	Level	RO	SRO
	Tier #	2	
	Group #	1	
	K/A #	005 K2.03	
	Importance Rating	2.7	

(Knowledge of bus power supplies to the following: RCS pressure boundary motor-operated valves)

Proposed Question: Common 3

The following conditions exist on Unit 1:

- Plant shutdown and cooldown to 100°F is in progress.
- NC System temperature 180°F.
- Both trains of ND in service in accordance with station procedures.

Which ONE (1) of the following identifies the power supply to 1ND-1B and 1ND-2AC, "C NC Loop to ND Pump Isolation Valves," and the status of their motor breakers?

A. The valves are powered from Motor Control Centers powered by the **600V Unit Load Centers**, and the breakers are **OPEN**.

B. The valves are powered from Motor Control Centers powered by the **600V Unit Load Centers**, and the breakers are **CLOSED**.

C. The valves are powered from Motor Control Centers powered by the **600V Essential Load Centers**, and the breakers are **OPEN**.

D. The valves are powered from Motor Control Centers powered by the **600V Essential Load Centers**, and the breakers are **CLOSED**.

Proposed Answer: C

Explanation (Optional):

A. Incorrect. Wrong power supply.

B. Incorrect. Wrong power supply, wrong breaker position.

C. Correct. Page 21 of OP-MC-PS-ND (ND System Lesson Plan) indicates that these valves are capable of being closed during a Station Blackout or Loss of Offsite Power. This means that they must be powered by the Essential Power distribution buses. Page 23 states "The normal configuration is to remove power from 1ND-1B and 1ND-2AC after the Unit

has reached Mode 5 during shutdown. OP/1/A/6100/SD-12 identifies the breakers as 1EMXD-8D and 1EMXA/4-3C which are MCCs powered from the 600V Essential Load Centers, and tags the breakers open when the plant is in Mode during a cooldown to 100°F.

D. Incorrect. Correct power supply, wrong breaker position for given plant configuration.

Technical Reference(s)	OP/1/A/6100/SD-12, Rev 33	(Attach if not previously provided)
	OP-MC-PS-ND p19-23, Rev 37	(Including version or revision #)

Proposed references to be provided to applicants during examination: None

Learning Objective: OP-MC-PS-ND 5 (As available)

Question Source:	Bank #		
	Modified Bank #		(Note changes or attach parent)
	New	X	

Question History: Last NRC Exam NA

Question Cognitive Level:	Memory or Fundamental Knowledge	X
	Comprehension or Analysis	

10 CFR Part 55 Content:	55.41	7, 10
	55.43	

Comments:
KA is matched because item directly evaluates power source for MOVs, and further discriminates by asking breaker position

2.3 ND System Valves

Objective # 5

2.3.1 ND-1B (C NC Loop to ND Pumps) and ND-2AC (C NC Loop to ND Pumps)

Objective # 6, 7

These safety related motor operated valves (fail as is) are in series in the NCS to ND suction line. Either of these valves can isolate the ND System suction line from the NC System ("C" loop). Open/closed pushbuttons for these valves are located on MC11. These valves may also be controlled from the ASP by transferring control with the "C/R, LOCAL" selector switch. Valve status is provided to the OAC or ASP (after control transfer to ASP).

ND-1B can **not** be opened with the open pushbutton unless NC System WR Loop 'C' pressure is less than 385 psig (as sensed by NCPT5140) and **all** of the following valves are **closed**:

- **FW-27A (FWST Supply to ND)**
- **NI-184B (RB Sump to Train B ND & NS)**
- **NI-136B (B NI Pump Suction from ND)**
- **NS-38B (B ND to NS Cont. Outside Isol)**

ND-2AC can **not** be opened with its open pushbutton unless NC System WR Loop 'D' pressure is less than 385 psig (as sensed by NCPT5120) and **all** of the following valves are **closed**:

- **FW-27A (FWST Supply to ND)**
- **NI-185A (RB Sump to Train A ND & NS)**
- **ND-58A (Train A ND to NV & NI Pumps)**
- **NS-43A (A ND to NS Cont. Outside Isol)**

The interlocks on these valves ensure that:

- **the ND system is not over-pressurized as a result of opening the suction isolations with high NCS pressure.**
- the ND pump suctions will not be simultaneously crossed tied between the NCS, FWST and containment sump. With these valves open, the NCS and the FWST could be drained to the containment sump through ND-4B (B ND Pump Suction from FWST or NC) and ND-19A (A ND Pump Suction from FWST or NC).
- the ND pumps will not spray NCS fluid into containment through the auxiliary containment spray header.
- the NCS fluid will not be diverted from its normal residual heat removal flow path.

There are no automatic closure signals for ND-1B and ND-2AC. Annunciators on AD9, "ND-2A OPEN AND NC HI PRESS" and "ND-1B OPEN AND NC HI PRESS", will warn the operator if NCS pressure is 440 psig (or greater) with ND-1A or ND-2AC open/intermediate. The purpose of this annunciator is to alert the operator that a double barrier isolation between the NCS and ND systems does not exist when the plant is pressurized and **not** on ND cooling. Upon receipt of this alarm, the immediate operator action is to reduce NCS pressure until the alarm clears.

Objective #6

ND-1B and ND-2AC shall be closed with power removed while the ND system is aligned for standby readiness to prevent overpressurization of the ND system. Overpressure protection for the ND system is provided by the ND system suction relief valves which open at 450 psig and the ND to NCS cold leg and hot leg discharge relief valves which lift at 600 psig. Both suction and discharge relief valves discharge to the PRT.

Valve ND-2AC shall be capable of closing to isolate the NC pressure boundary during a station blackout event. ND-1B and ND-2AC shall be capable of opening following a loss of offsite power and station blackout to help cool the unit to a safe shutdown condition. ND-1B and ND-2AC may be controlled from the Auxiliary Shutdown panel following a control room evacuation, to help bring the unit to a safe shutdown condition. ND-2AC can also be operated from the Safe Shutdown Facility (SSF) Control Panel.

Portable motor starter and control stations are provided to control residual heat removal letdown valves after a postulated fire disables normal power supplies to these valves. The power operation of these valves with portable equipment is required to achieve cold shutdown without the need to enter containment to manually operate valves. Emergency power is obtained from motor control centers (MCC) located in the Diesel Generator rooms and is connected to the valves through normal containment penetrations. Portable power supplies and receiver gauges are used to monitor the reactor coolant system pressure should normal indications be lost. This is required by 10CFR50 Appendix R for fire damage control.

The single failure of ND-1B or ND-2AC could prevent the use of the residual heat removal system. Temporary motor starters and actuator hand-wheels are provided to enhance reliability, and low ND flow alarms are provided to alert the operators of system isolation. Additionally, Duke Power committed to have power removed from ND-1B and ND-2AC while the reactor head is unbolted and the refueling canal was filled, to reduce the possibility of a loss of ND suction (Ref. FSAR Question 212.72).

The normal system configuration is to remove power from ND-1B and ND-2AC after the Unit has reached Mode 5 during shutdown (while performing OP/1or 2/A/6100/SD-12, Cooldown to 100^{0}F). Maintaining power during Mode 4 allows the ND suction isolation valves to be operated from the control room while the NC system is a high energy system and ND piping has high thermal stresses, minimizing shutdown LOCA risk. Power is removed from the valves in Mode 5 to minimize the risk of a loss of ND event due to spurious valve movement. During plant startup, power is removed from ND-1B and ND-2AC after the unit has entered Mode 4 but prior to 350^{0}F while performing OP/1or 2/A/6100/SU-14 (Removing ND from Service).

The **OPERABILITY** requirements for these valves can be found in the DBD.

2.3.2 ND-4B (B ND Pump Suction From FWST Or NC) and ND-19A (A ND Pump Suction From FWST Or NC)

Objective #5

These valves are controlled from MC11 by open/close pushbuttons. They will auto close when their train related containment sump isolation valve fully opens (NI-184B and NI-185A). This interlock is designed to prevent the FWST from being drained to the containment sump.

ND-4B is interlocked so that it can not be opened unless the following valves are closed:

- **NS-38B (B ND to NS Cont. Outside Isol.) prevents NCS coolant from being pumped to the containment spray ring.**
- **NI-136B (B NI Pump Suction From ND) prevents NI system suction from being overpressurized**
- **NI-184B (RB Sump to Train B ND & NS) prevents FWST from being drained to the containment sump**
- **NS-1B (B NS Suct. From Cont Sump) prevents the NS System suction from being overpressurized.**

ND-19A is interlocked so that it cannot be opened unless the following valves are closed:

- **NS-43A (A ND to NS Cont. Outside Isol.) prevents NCS coolant from being pumped to the containment spray ring.**
- **ND-58A (Train A ND to NV & NI Pumps) prevents NV System suction overpressurization**
- **NI -185A (RB Sump to Train A ND & NS) prevents FWST from being drained to the containment sump**
- **NS-18A (A NS Pump From Cont Sump) prevent NS System suction overpressurization**

_____ 3.4 Defeat S/G Slave Relays per OP/1/A/6250/003 A (BW System).

_____ 3.5 Notify IAE to jumper S/G Lo-Lo Level Reactor Trip signals in 7300 cabinets per IP/0/A/3010/006 D (SSPS Outage Configuration And Power Supply Test).

_____ _____/_____
Person Notified Date Time

NOTE:	The following steps may be performed concurrently or in any order.

_____ 3.6 Notify Maintenance Coordinator to have flange installed at 1FW-76 (Unit 1 Refueling Cavity Flush Drn).

_____ _____/_____
Person Notified Date Time

3.7 Perform the following:

☐ 3.7.1 Notify designated Operator that the requirement to be capable of removing tag and racking in an NI Pump breaker within 15 minutes of dispatch is no longer in effect.

☐ 3.7.2 Delete this item from SRO Turnover Checklist.

3.8 Tag the following open:

☐ 1EMXD-8D (1ND-1B)
☐ 1EMXA4-3C (1ND-2A)

CLASSROOM TIME (Hours)

NLO	NLOR	LPRO	LPSO	LOR
2	2	2	2	1.5

OBJECTIVES

	OBJECTIVE	NLO	NLOR	LPRO	LPSO	LOR
1	Explain the purpose of the ND System. PSND001	X	X	X	X	
2	Sketch the ND System reflecting all major components and interconnections to associated systems (NC, NI, NS) per Drawing 7.1. PSND002	X	X	X	X	
3	Describe the instrumentation and alarms associated with the ND System. PSND003		X	X	X	X
4	List the power supplies for the ND pumps. PSND004	X	X	X	X	
5	Describe the operation of the following ND valves: • ND1B(2AC) - C Loop to ND Pump • ND4B (19A) - B(A) ND Pump Suction from FWST or NC • ND67B (68A) - B(A) ND Pump and B(A) ND HX Mini-Flow • ND15B (30A) - Train B(A) ND to Hot Leg Isolation • ND35 - ND System to FWST Isolation. PSND005		X	X	X	X
6	Explain overpressure protection for the ND System. PSND006		X	X	X	X
7	Explain the interlocks associated with the emergency auto-swap of ND pump suctions to the containment sump during an accident. PSND007	X	X	X	X	X

Examination Outline Cross-reference:	Level	RO	SRO
	Tier #	2	
	Group #	1	
	K/A #	006 A4.01	
	Importance Rating	4.1	

(Ability to manually operate and/or monitor in the control room: Pumps)

Proposed Question: Common 4

While Unit 1 is at power, a Reactor Trip/Safety Injection occurs and all systems operate as designed. The following trend is observed over the next 15 minutes for NC System pressure:

Time after Trip/SI	NC Pressure
1 minute	1800 psig
4 minutes	1600 psig
7 minutes	1400 psig
10 minutes	1200 psig

Which ONE (1) of the following is an NI Pump observable response in the Control Room?

A. Discharge pressure **starts** to decrease and motor amps start to increase between 4-7 minutes.

B. Discharge flow **starts** to increase and motor amps start to decrease between 4-7 minutes.

C. Discharge pressure **starts** to decrease and motor amps start to increase between 7-10 minutes.

D. Discharge flow **starts** to increase and motor amps start to decrease between 7-10 minutes.

Proposed Answer: **A**

Explanation (Optional):

OP-MC-ECC-NI (NI System Lesson Plan) indicates that "Each pump has a shutoff head of 1520 psig and a design capacity of 400 gpm at 2600 feet of head (1125 psid). With this in mind:

A. Correct. Discharge pressure will start to decrease at approximately 5 minutes when NC System pressure drops below the shutoff head of the NI Pumps (1520 psig). Motor amps are indicative of pump work (Wp=MvΔP α IE). As pump flow increases (M), pump amps (I) will increase. As NC system pressure drops below the pump shutoff head, pump flow will increase with a corresponding increase in motor amps.

B. Incorrect. Motor Amps will increase, NOT decrease, as pump flow increases (See A).

C. Incorrect. NI Pump shutoff head is 1520 psig and pump characteristics will change when NC System pressure drops below this value. This occurs at the 5 minute point. Between 7-10 minutes the pump will continue to show signs of decreasing NC System pressure, however, the change in pump characteristics started between 4-7 minutes.

D. Incorrect. Changes in pump characteristics occur earlier (See C), Motor Amps will NOT decrease as pump flow increases.

Technical Reference(s)	OP-MC-ECC-NI p13-17 (Rev.24)	(Attach if not previously provided)
	OP-BNT-CP04, p 28, 30,43,52 Rev 11	(Including version or revision #)

Proposed references to be provided to applicants during examination: None

Learning Objective: ECC-NI 4, BNT-CP04-3C (As available)

Question Source:	Bank #		
	Modified Bank #		(Note changes or attach parent)
	New	X	

Question History: Last NRC Exam

Question Cognitive Level:	Memory or Fundamental Knowledge	
	Comprehension or Analysis	X

10 CFR Part 55 Content:	55.41	7, 8, 14
	55.43	

Comments:
KA is matched because item tests operation and behavior characteristics of

ECCS Pumps under changing plant conditions.

SEQ	PUMPS ENABLING OBJECTIVES	BOT	GFES
1	List and describe the two classifications of pumps. CP04001	X	X
2	Define pump operating characteristics, to include:		
	A. Capacity CP04002	X	X
	B. Pump head terms CP04003		X
	C. Pump lift terms CP04004		X
	D. Net positive suction head available ($NPSH_A$) CP04005	X	X
	E. Net positive suction head required ($NPSH_R$) CP04006	X	X
	F. Pump efficiency CP04007, CP04013		X
3	Explain the following concerning centrifugal pump cavitation, gas binding, runout, and deadheading:		
	A. Description of what takes place CP04008, CP04032, CP04038, CP04043	X	X
	B. Causes CP04009, CP04033, CP04039, CP04044	X	X
	C. Indications CP04010, CP04034, CP04040, CP04045	X	X
	D. Results (problems) CP04011, CP04035, CP04041, CP04046	X	X
	E. Methods of prevention and correction CP04012, CP04036, CP04042, CP04047	X	X
4	Evaluate pump head to determine pump efficiency and pump work. CP04014		X

6.0 CENTRIFUGAL PUMP OPERATION

Objective 8A, B

Before operating a centrifugal pump, the driver should be tested for its direction of rotation. The arrow on the pump casing indicates the proper direction for rotation.

The suction valve should be verified open and positive suction pressure available to ensure adequate $NPSH_A$.

The bearings should be supplied with the proper grade of lubricant and oil lubricated bearings should be filled to the overflow level.

Cooling water should be introduced carefully to pump bearings and lubricating oil. Use only sufficient water to keep the lubricant at a safe working temperature. Before starting the pump, bearing temperatures should be near ambient temperature. Prior to pump start, the main concern is that the bearings are too cold, due to cooling water being supplied with the pump off. If bearing temperatures are low, cooling water should be isolated until pump bearings are at normal operating temperatures.

Final inspection of all parts should be made carefully before starting the pump. It should be possible to rotate the shaft by hand. This starts the flow of oil to the bearing surfaces.

Objective 3

A centrifugal pump should not be operated until it is filled with fluid. If the pump is run without fluid, there is danger of damage to liquid lubricated internal parts. Several methods can be used to ensure that all the air is vented from the pump. The process of filling the pump with liquid and evacuating all gases is called priming. Adequate priming can normally be assured once a solid stream of fluid issues from the vent valve. In some systems, automatic priming is accomplished utilizing a priming pump controlled by a float switch.

Priming the pump and venting the casing during system startup will prevent gas binding. Once the pump is started, the occurrence of gas binding would be indicated by low flow and low discharge pressure readings. Additionally, the motor would be drawing minimum current.

Objective 8B,9

Centrifugal pumps are normally started with the discharge valve closed. Pumps operate at only 35-50 percent of full load when the discharge valve is closed. Pumps started with the discharge valve open require more starting torque. If the liquid on the discharge side of the pump is under sufficient head, the pump can be started with the discharge valve open. When the pump is started, the normal electrical response is high starting amps (three to seven times the normal operating current). This rapidly drops off to a lower equilibrium value.

Additionally, motor current is affected by system (fluid) temperature. At low temperatures, more current is required to circulate the cooler (denser) fluid. As fluid temperature rises, less power is necessary to maintain a constant volumetric flow rate.

Example 3 (GFES)

A pump motor that is circulating water at 180°F in a closed system is drawing 100 amps of current. If the temperature of the fluid decreases such that the fluid density increases by 4 %, how much current will the motor require?

Assume pump head and volumetric flow rate remain constant.

Work is force times distance. Power is the rate of doing work. Therefore:

sometimes called "minimum flow recirculation" since the path provided usually returns (recirculates) back to the pump suction. Mini-flow recirc valve controllers usually sense the flow downstream of the pump discharge and open the recirculation valve if the flow is not at some minimum value.

Shutoff head is generally defined as the maximum value of head that a pump can produce. At this discharge pressure, flow from the pump is stopped. All of the energy input from the prime mover is being converted into pressure. Deadheading occurs when the pump is discharging into its shutoff head. In many applications, a bypass or minimum flow line is utilized to prevent the pump from operating at shutoff head. With these modifications an amount of flow necessary to cool the pump can be maintained. The smallest amount of flow that will prevent overheating is called the pump minimum flow requirement.

Objective 3,8E

6.2 RUNOUT

Starting the pump with the discharge valve fully open may also result in pump "runout" which is defined as excessive flow rate in a centrifugal pump that can lead to mechanical stress and abnormally high motor current. **Pump Runout** refers to the maximum flow rate at the lowest anticipated system head. Pumps that operate in an oversized system can reach their maximum flow rates due to too low a system head loss. Correctly sized pumps can reach runout due to ruptures in the system that drastically reduces head loss.

Runout results in pump efficiency decreasing, eventual flow loss with the possibility of cavitation and overheating of the motor and possible pump vibration.

Runout can be prevented by system design (choose correct pump for system), throttling pump discharge to prevent high flow rates, by creating a minimum static head the pump must always discharge to and with alarms if flow rates become excessive.

6.3 GAS BINDING

Gas binding of a centrifugal pump is a condition where the casing contains gases or vapors to the point where the impeller is no longer able to contact enough liquid to function correctly. The impeller spins in the gas bubble, but is unable to force liquid through the pump. This can lead to problems for the pump's packing and bearings.

Centrifugal pumps are designed so that their pump casings are completely filled with liquid during pump operation. It is important to make sure that all gases are forced from the casing when the pump is being filled. A steady stream of liquid from the casing vent during filling must be observed to verify proper filling and venting. Other system vents must also be observed to emit a solid stream of liquid during filling to ensure all gases have been removed.

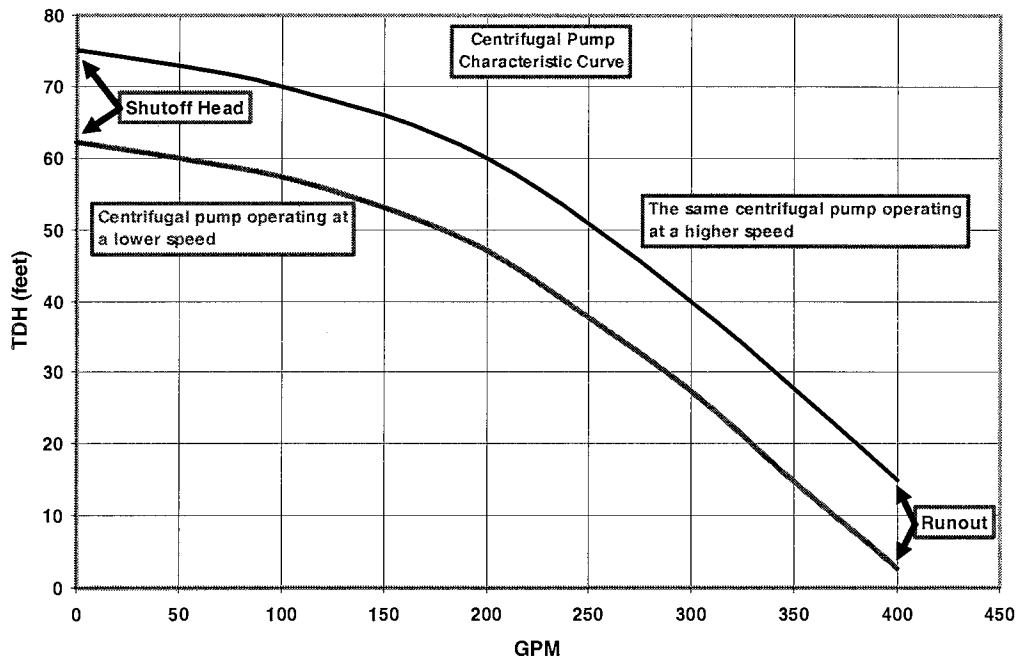

Figure 25 Centrifugal Pump Characteristic Curve

The blue curve of figure 25 depicts the effect of operating the same pump at a higher speed. Increasing the speed of the pump increases the shutoff head. The pump capacity increases by the same factor as the speed increases and the pump discharge head increases as the square of the factor by which the speed increases. If the pump operates at constant efficiency, then the power required to operate the pump at a new speed increases as the cube of the factor by which the speed increases. However, pump efficiency varies widely over an operating range and varies with speed as well.

Another condition that occurs in centrifugal pumps is "runout". Runout is an abnormally high flow rate from a centrifugal pump that can lead to mechanical stress on the pump and excessive motor current. Runout is a result of a loss of downstream pressure (piping not filled and vented, leak or pipe break). The drop in pressure causes more flow and more pump work, resulting in excessive motor current, which may cause damage to the windings. The low backpressure can also result in cavitation. The point of runout is noted on the characteristic curve at high flow and low discharge head. Proper filling and venting of systems prior to startup and starting with the discharge valve throttled or closed will prevent runout. High motor current trips protect the pump motor winding from damage due to runout.

12.1 HEAD VS. FLOW FOR A CENTRIFUGAL PUMP

Objective 18

A centrifugal pump provides an amount of head equal to that lost by friction. The pump characteristic curve can be drawn on the same graph as the head loss for the system. The point where the curves intersect is the point where pump head equals friction loss. This is where the pump operates and is called the operating point as shown in Figure 26.

Centrifugal Pump Operation

Condition	Description	Cause(s)	Indications	Results	Prevention/Correction
Cavitation	Formation and subsequent collapse of vapor bubbles at pump impeller	• Insufficient NPSH • Suction pressure approaching Saturation Pressure of fluid	• Excessive noise • Pump vibration • Fluctuating motor current • Fluctuating discharge pressure • Low or fluctuating flow rates	• Reduced capacity • Pump damage • Flow oscillations • Pump overheating • Pitting and subsequent erosion of impeller	• Head tank to create static pressure at pump suction • Booster pump to increase pressure at pump suction • Large diameter suction to convert fluid KE to fluid PV causing pressure increase at pump suction • Sub-cool liquid to lower NPSH • Pressurize entire system
Gas Binding	Pump casing is filled with vapor or air	• Non-condensable gases out of solution • Incomplete filling and venting of system	• Low or no flow • Low or no discharge pressure • Minimum motor current	• Damage to liquid lubricated/cooled internal pump components due to overheating	Adequate priming (filling and venting) of system prior to pump operation
Runout	Max flow rate at lowest anticipated system head	• Pump operation in oversized system with low system head loss • System ruptures causing reduced head loss	• Very high flow rate • Very high motor current • Low discharge pressure • High pump vibration	• Mechanical stresses due to high pump speed • Motor damage due to excessive motor current	• System design to insure sufficient head loss • Throttle pump discharge to increase head loss • Alarms and protective trips for excessive flow rates • Start a parallel pump
Dead Heading	Operation of a pump at high discharge head with little or no flow	• Operation with discharge valve closed • Operation with blocked discharge • Operating pump against system pressure above pump shut off head	• Low flow • High discharge pressure • Low motor current	• Very low efficiency • Increased fluid temperature in pump possibly resulting in pump damage from overheating	• Minimize operation with discharge valve shut • Establish minimum recirculation flow with bypass flow path
Locked rotor	Pump shaft will not rotate when motor is started or shaft seizes while running	• Bearing failure or rubbing (friction) between moving parts	• No flow • No discharge pressure • Very high motor current	• Motor damage unless thermal overloads or over-current relays actuate	• Stop motor, rebuild pump
Sheared Shaft	Coupling between motor and pump shafts fails or a shaft breaks allowing motor to rotate freely	• Pump bearing failure or rubbing (friction) between moving parts • Locked rotor • Excessive vibration • Inadequate lubrication	• No flow or pressure • Low motor current	• No effect on motor • Cause will require repair	• Repair pump/motor

CLASSROOM TIME (Hours)

NLO	NLOR	LPRO	LPSO	LOR
1.0	1.0	1.0	1.0	1.0

OBJECTIVES

	OBJECTIVE	NLO	NLOR	LPRO	LPSO	LOR
1	State the purpose of the Safety Injection System. ECCNI001	X	X	X	X	
2	Sketch the system drawing (Fig 7.1) including all major components and valves, show all tie-ins to associated systems (ND, NV, NC). ECCNI002	X				
3	Sketch the system drawing (Fig 7.2) including all major components and valves, show all tie-ins to associated systems. ECCNI003		X	X	X	
4	List the pressure at which the NI pumps will begin injecting water into the NC System and state the NI pumps design flowrate. ECCNI004	X	X	X	X	
5	State the power supplies for the NI pumps. ECCNI005	X	X	X	X	
6	List all protection signals that will automatically initiate Safety Injection. ECCNI006	X	X			
7	Describe the signals, setpoints, permissives, and logic required to initiate and reset Safety Injection. ECCNI007	X	X	X	X	X
8	Describe the interlocks associated with the NI System. ECCNI008			X	X	X

2.0 COMPONENT DESCRIPTION

2.1 Suction Supplies

2.1.1 Refueling Water Storage Tank (FWST)

The FWST provides a large volume of borated water to be used during refueling, ECCS actuation, fill of the Cold Leg Accumulators and makeup to the spent fuel pool. The normal volume is 395,000 gallons with a minimum Technical Specification volume of 389,000 gallons (operating). The range of operating temperatures is from 70°F minimum to 100°F maximum. The tank is at atmospheric pressure. A typical Boron concentration is approximately 2700 - 2800 ppm (the actual COLR required value varies each cycle). Check valve NI-101 prevents backflow into the FWST when the ND pumps supply the NI pumps. NI-100B (common), NI-103A (Pump A) and NI-135B (Pump B) are normally Open suction line valves for the NI system.

2.1.2 Containment Sump

In the event of a major LOCA, the containment sump will receive water from the NC system break, ECCS injection flow through the break, and the ice condenser during ice melt. During the recirculation phase, water is taken from the containment sumps by the ND pumps and supplied to the Emergency Core Cooling System pumps including the NI pumps. NI-136B, ND-58A, NI-332A, and NI-333B are normally closed during power operation and Injection Phase, but are opened by operator action for cold leg recirculation and remain open for hot leg recirculation. NI-334B is normally open in this flow path. Annunciators inform the operator when containment sump level has reached greater than 2.5 and greater than 3 feet. This lets the operator know that adequate volume is contained in the sump for the recirculation phase.

2.2 Safety Injection Pumps

Objective # 4

The safety injection pumps are designed to inject water into the NC system when the system pressure remains high, above the pressure at which the accumulator tanks can operate, for a relatively long period of time. **Each pump has a shutoff head of 1520 psig and a design capacity of 400 gpm** at 2600 feet of head (1125 psid). The pumps start on receipt of a safety injection signal. Each pump is a multi-stage, centrifugal pump.

Objective # 5

The pumps are train related and are powered from ETA and ETB, Essential 4160 VAC.

2.2.1 Valve Leak-Off

By original design, valve stem leakoffs inside containment were routed to the NCDT. Since these leakoffs interfered with accurate NC System leakage determination, these leakoffs have been rerouted permanently to the Containment Floor and Equipment Sump. The NI pump discharge piping has several valves that have valve stem leakoffs which could mask Cold Leg Accumulator leakage. These valves are routed to the ND/NS Sump or RHT. In order to quickly identify valves which may have a primary

packing leak, an isolation valve and a test valve are installed in the individual valve stem leakoff tubing for trouble shooting CLA leakage.

2.3 Discharge Paths

2.3.1 Cold Leg Injection Lines

Reference Figure 7.4, 7.5. The cold leg injection lines are used during both injection phase and cold leg recirculation phase of an accident. The cold leg injection isolation valves, NI-118A and150B, are normally Open, tying the two trains of pump discharge together. NI-162A, the common isolation to the cold legs, is required to be Open with power removed. NI-162A would be manually Closed from the control room during hot leg recirculation. Manually adjusted throttle valves provide an acceptable level of total ECCS flow by equalizing flow through all four lines and limiting the total flow through any NI pump to less than runout conditions.

2.3.2 Hot Leg Injection Lines

Reference Figure 7.6. The hot leg injection lines are used during the hot leg recirculation phase of an accident. The hot leg injection isolation valves, NI-121A and152B, are normally Closed with power removed until going into hot leg recirculation. When Opened, NI-121A will supply hot legs "B" and "C" while NI-152B will supply the other two hot legs, "A" and "D." Again, manually adjusted throttle valves provide an acceptable level of total ECCS flow by equalizing flow through all four lines and limiting the total flow through any NI pump to less than runout conditions.

2.3.3 Mini-Flow / Recirculation Lines

The normally Open valves, NI-115B and NI-144B, provide mini-flow protection to prevent dead heading the NI pumps. Each pump has an installed orifice to provide 40 gpm minimum flow. A common isolation valve, NI-147A, is required to be Open with power removed per Tech Specs. The mini-flow is returned to the Refueling Water Storage Tank. During the recirculation phase of an accident, the mini-flow path must be isolated to prevent putting sump water back into the FWST and resulting in an uncontrolled radioactive release via the FWST vent.

2.4 Instrumentation and Controls

2.4.1 NI System Controls

The NI system pumps and valves are controlled from the control room main control board MC-11, Safety Injection section. The controls include:

- Start/Stop pushbuttons for the NI pumps.
- Open/Close pushbuttons for the NI system valves.
- Enable/Disable Power Disconnect switches (to prevent inadvertent operation) for valves NI-100B and NI-147A.

2.4.2 NI System Indications

The NI system indications are located on the main control board MC-11, Safety Injection section. The indications include:

- NI pump Discharge Pressure.
- NI Pump Flow.
- NI Pump Recirc Flow (common line).
- NI Pump Amps.

Local indication is provided for NI Pump Suction, Discharge and Header Pressure.

2.4.3 NI System Alarms

Alarm Panel AD-9

- NI-100B FWST TO NI PUMP NOT FULLY OPEN

Alarm Panel AD-14

- FWST LO LEVEL
- FWST LO-LO LEVEL
- CONT SUMP LEVEL GREATER THAN 2.5 FT
- CONT SUMP LEVEL GREATER THAN 3 FT

Alarm Panel AD-15

- FWST LO LEVEL
- FWST LO-LO LEVEL
- CONT SUMP LEVEL GREATER THAN 2.5 FT
- CONT SUMP LEVEL GREATER THAN 3 FT

Status Panel SI-12

- NI PUMP A OIL CLR LO FLOW
- NI PUMP B OIL CLR LO FLOW

MC-16, ESF MONITOR LIGHT PANEL

- The monitor status panel provides a quick indication for the operator to determine a component out of normal. The panel contains seven groups of lights for different modes of ECCS operation. A component "lights up" or "goes dark" when it is in an Off-Normal condition for the ECCS mode requirements. A few ECCS components are lit during Normal plant operations while they perform non-ECCS functions.

Examination Outline Cross-reference:	Level	RO	SRO
	Tier #	2	
	Group #	1	
	K/A #	007 A3.01	
	Importance Rating	2.7	

(Ability to monitor automatic operation of the PRTS, including: Components which discharge to the PRT)

Proposed Question: Common 5

While Unit 1 is at 100% power the Sealwater Return Filter becomes completely clogged and passes no water.

Which ONE (1) of the following parameters is indicative of this failure?

A. Sealwater supply flow on all four NC Pumps increase.

B. Sealwater return flows on all four NC Pumps decrease to 0 gpm.

C. VCT level increase.

D. PRT level increase.

Proposed Answer: D

Explanation (Optional):

A. Incorrect. The Seal Water supply flow to the NC Pumps is controlled by 1NV-238/1NV-241 which is not impacted by this event.

B. Incorrect. While flow is blocked in the Seal Water Return Line, flow from the common discharge header will continue when the Relief Valve lifts, and flow, although fluctuating, will be indicated on the Seal Water Return flow indicators for all NC Pumps.

C. Incorrect. Sealwater return flow is a mass input into the VCT, and flow is now stopped. This will cause VCT level to decrease and eventually auto makeup to initiate.

D. Correct. With a flow obstruction in the Seal Water Return Line, system pressure will rise to 150 psig and lift the Seal Water Return Relief Valve, which lifts to the PRT. According to Section 2.9 of OP-MC-PS-NC (NC System Lesson Plan) the PRT is equipped with temperature, pressure and level indication. With the Relief Valve lifting PRT will rise.

Technical Reference(s): OP-MC-PS-NC p39, 41 Rev 30 (Attach if not previously provided)

OP-MC-PS-NV, P19,27, 39, 41, 53, 123, 125, 137 Rev 55 (Including version or revision #)

Proposed references to be provided to applicants during examination: None

Learning Objective: PS-NV 3 (As available)

Question Source:
- Bank # _____
- Modified Bank # _____ (Note changes or attach parent)
- New X

Question History: Last NRC Exam _____

Question Cognitive Level:
- Memory or Fundamental Knowledge _____
- Comprehension or Analysis X

10 CFR Part 55 Content:
- 55.41 7
- 55.43 _____

Comments:
KA is matched because item evaluates a component discharging to PRT through a relief valve under abnormal plant conditions

CLASSROOM TIME (Hours)

NLO	NLOR	LPRO	LPSO	LOR
3.0	3.0	3.0	3.0	2.5

OBJECTIVES

SEQ	OBJECTIVE	NLO	NLOR	LPRO	LPSO	LOR
1	Explain the purpose of the NV System.	X	X	X	X	
2	Sketch the NV System to reflect the normal letdown and charging flowpath as well as seal injection and VCT makeup operations per PS-NV-7.1.	X	X	X	X	
3	Sketch the NV System flow balance to include normal flow values. (PS-NV-7.2)	X	X	X	X	
4	Explain the purpose of the following NV System components: • Regenerative Heat Exchanger • Letdown Orifices • Letdown Heat Exchanger • Reactor Coolant Filters • Mixed Bed Demineralizers • Cation Bed Demineralizers • Volume Control Tank • Charging Pumps and PD Pump Suction dampener	X	X	X	X	

Seal Injection

Objective # 3

A portion of the discharge of the charging pump(s) flows through the seal injection filters and then it enters the NCP between the radial bearing and the thermal barrier. At this point the flow splits. Approximately 5 gpm flows down the shaft into NCS and approximately 3 gpm passes up the shaft to the #1 seal. The #1 seal discharges ≅ 3 gpm back to the VCT via the seal return line and through the seal water heat exchanger. Approximately 3 gph passes through the #2 seal to the standpipe. The standpipe provides back pressure on the #2 seal and drains to the NC drain tank (NCDT). Finally, ≅ 100 cc/hr passes through the #3 seal to NCDT.

Excess Letdown

Excess letdown is provided if normal letdown is unavailable or to increase the letdown flow during heat up to assist in removal of water inventory due to thermal expansion. The flow comes from the "C" NC loop cold leg and the flow rate is ≅ 20 gpm. Flow normally goes to the seal return line and then to the VCT, with an alternate flow path to the NCDT.

1.2.2 Chemical Control, Purification and Makeup

Provisions are made for the addition and removal of pH control chemicals, control of oxygen, purification to remove corrosion and fission products, the addition and removal of soluble chemical absorber and makeup to the NCS.

pH Control

The pH control chemical used is lithium hydroxide (LiOH). It is chosen for compatibility with NCS components and is added to the NCS via the chemical mix tank. If the lithium concentration exceeds requirements, the concentration may be reduced by use of a fresh mixed bed demineralizer, the cation bed demineralizer, or letdown feed and bleed to the Recycle Holdup Tank (RHT).

Oxygen Control

Oxygen is controlled by two different methods. When the NC system is less than 250°F, Hydrazine is used. Hydrazine is introduced into the NC system through the chemical mix tank. When the NC system is greater than 250°F, Hydrogen (H_2) is used to control Oxygen. H_2 overpressure is maintained on the VCT to maintain ≈ 40-50 cc/kg H_2 in the NC system. Normally, a portion of this H_2 overpressure is continuously purged to the Waste Gas (WG) system.

Purification

Purification is provided to cleanup the NC system. This is accomplished through the use of a mixed bed demineralizer (one of two). In addition, a cation bed demineralizer may be used in the event of fuel failure or excessive Lithium concentration in the NC system. The mixed bed demineralizers are in the normal letdown flow path while the cation demineralizer has to be valved in for use. During low temperature/low pressure conditions in the NC system, an alternate letdown flow path from the ND System may be used.

2.10 Mixed Bed Demineralizers

Objective # 4

The mixed bed demineralizers, two (2) per unit, maintain Reactor Coolant purity (fission and corrosion products). The type of resins used are Hydrogen-form cation resin and Hydroxyl-form anion resin. The demineralizers are designed to accept letdown flow up to 120 gpm and to have sufficient resin capacity for one (1) core cycle. Further analysis has determined that flowrates up to 150 gpm are acceptable for short duration during crudburst cleanup. (With 2 demineralizers in service, letdown flow up to 185 gpm is allowed.)

When placing a Mixed Bed Demineralizer in service it may be at a different boron concentration than the NC System due to core burnup or other changing system conditions. This could result in a boron dilution or addition to the NC System. If the difference is outside the chemistry limits, the demineralizer must be flushed to the RHT prior to placing it in service.

A change in demineralizer temperature can affect the boron concentration out of the demineralizer. Decrease in temperature can cause a dilution of the NC System (cooler resin holds more boron). An increase in temperature will have the opposite effect. See OE item 5.9.

An exhausted mixed bed demineralizer is sluiced and reloaded with fresh resin. This is normally done several months after the refueling outage to allow for decay time. The fresh mixed bed demineralizer is then used intermittently BOL (until Lithium saturated) to control excessive Li-7 (pH control) and at EOL to deborate.

2.11 Cation Bed Demineralizer

Objective # 4

The cation bed demineralizer is used intermittently to control excessive Li-7 (pH control) and also used in the event of fuel failure. The demineralizer uses hydrogen-form resin and is **sized to accommodate a maximum letdown flow of 75 gpm.** (Flow through the cation bed would require adjustment if it were aligned while letdown flow is increased or decreased.) Normal desired flow is 70-75 gpm, and if a flow of at least 65 gpm is not obtained, then Primary Chemistry should be contacted as this could affect NCS Lithium removal rate.

When placing a Cation Bed Demineralizer in service, it may be at a different boron concentration than the NC System due to core burnup or other changing system conditions. This could result in a boron dilution or addition to the NC System. If the difference is outside the chemistry limits, the demineralizer must be flushed to the RHT prior to placing it in service.

2.12 Volume Control Tank

Objective # 4

The Volume Control Tank (VCT) acts as an additional surge volume for the NC System. Normal inputs to the VCT are letdown flow, NCP #1 Seal Leakoff and NV

Objective # 5

NV-20 is a spring-loaded check valve around NV-13B that opens at 200 psid to relieve any expansion of water that may be trapped on the tube-side in the regenerative heat exchanger.

Pressurizer auxiliary spray from the charging header is controlled by NV-21A. The normal PZR spray valves (NC-27C and NC-29C) must remain closed while NV-21A is open. The normal spray headers are not analyzed for the reverse flow that would be initiated in this condition (PIP M95-1876). This flow path is used for adding chemicals to the pressurizer, during natural circulation cooldown to depressurize the NC System, and to aid in cooling the pressurizer during normal cooldown. NV-21A can also be controlled at the ASP by a manual loader.

Caution: Spray to Pressurizer ΔT must be less than 320°F to prevent thermal shock of the spray nozzle.

Pressurizer spray from the ND system is from the crosstie between the ND pumps and ND heat exchangers. Flow is controlled by a manual loader on the control board for NV-840 and there is a disconnect key switch, which allows for isolating the air to NV-840 when it is required to be isolated. This line is used to provide pressurizer spray when the ND System is in operation.

2.16 NCP's Seal Injection

Objective # 5

The NC pumps seal injection flow is directed to the reactor coolant pumps via the seal water injection filters. The flow (nominally 32-gpm total, 8 gpm/pump) is controlled by a manual loader for NV-241 (Seal Injection Flow Control). Normal seal injection flow is 7-9 gpm per pump.

There are two seal injection filters in parallel with only one filter in service at a time. These filters remove particles that are greater than 5 microns (Filter sizes are variable, with 5 microns being the maximum). The filters have local ΔP indication and a remote high ΔP alarm in the Control Room. The flow then enters the pumps at a point between the thermal barrier cooler and the pump bearing. The flow splits and a portion (normally about 5 gpm) enters the NC system via the labyrinth seals and thermal barrier cooler cavity. The remainder of the flow (normally about 3 gpm) flows up the pump shaft (cooling the lower bearing) and leaves the pump via the No. 1 seal discharge.

The seal leakoff is removed from the NC system as a portion of the letdown flow. The No. 1 seal discharges flow to a common manifold, is joined by Excess Letdown flow, and then exits the containment. It then passes through the seal water filter, joined by CCP recirc flow, and then through the seal water heat exchanger to the VCT. An alternate path to the suction side of the reciprocating charging pump is provided, but not normally used. Back pressure on the No. 1 seal is the summation of flow resistance in the seal water return lines, seal water HX static head, and the VCT pressure.

Leakage past the No. 1 seal supplies the No. 2 seal with water. The pressure on the No. 2 seal is the summation of the flow resistances in the seal water return lines and the VCT pressure. Approximately 3 gph will pass through the No. 2 seal. A standpipe is provided to ensure a back pressure of at least 7 feet of water on the No. 2 seal and warn of excessive No. 2 seal leakage. The first outlet from the standpipe has an orifice to permit normal No. 2 seal leakage to flow to the Reactor Coolant Drain Tank (NCDT); excessive No. 2 leakage results in a rise in standpipe level and, eventually, overflow to the NCDT via a second overflow connection.

No. 1 seal bypass flow can be used during NCS pressure between 100# and 1000#. This ensures an adequate flow to cool the radial bearing during low seal flow conditions.

NOTE: There are other parameters that must be met prior to the bypass of the No. 1 seal. Refer to OP-MC-PS-NCP, Reactor Coolant Pump and Motor (NCP) lesson plan.

The seal water return flow then goes through the containment isolation valves (NV-94AC, inside containment, & NV-95B, outside containment). These valves will automatically close on a Phase "A" Containment Isolation (S_t). The inside containment isolation valve, NV-94AC, can also be controlled from the SSF. A relief valve, NV-96, relieves trapped pressure from the containment penetration back to the upstream side of NV-94AC. The seal return line, inside containment, is protected from overpressure by a relief valve, NV-93, when the line is isolated. The setpoint is 150 psig and the valve relieves to the PRT. The flow then enters the seal water return filter, which collects particulates. In addition to the seal return flow, the excess letdown flow also goes through the seal return filter.

The filter is designed for maximum seal leakage flow and excess letdown flow. This combined flow now enters the tube side of the seal water heat exchanger along with the CCP recirculation mini-flow. The seal water heat exchanger is cooled by Component Cooling (KC) water circulated through shell side of the heat exchanger.

2.17 Excess Letdown

Objective # 5

Excess letdown is provided in the event that normal letdown is unavailable, to help maintain a constant NC inventory / PZR level. The flow comes from the NC Loop C Cold Leg through NV-24B and NV-25B, which can also be controlled from the ASP. The flow then goes through the excess letdown heat exchanger and then through NV-26. A manual loader, for flow control, controls NV-26, which can also be controlled from the ASP. NCS flow is through the tube side (outlet temperature ≈ 165°F) and Component Cooling (KC) water flows through the shell side. The excess letdown discharges to NV-27B, which controls the flow path to be taken, either the NCDT or the seal return to the VCT (normal flow path). NV-27B is controlled from the Control Room and will fail to the VCT position on Loss of Air.

The excess letdown flow of ≈ 20 gpm provides the capability to letdown the seal injection flow entering the NCS of ≈ 5 gpm per pump (≈ 20 gpm).

NV-156 – Downstream of Letdown Pressure Control Valve NV124, protects piping and demineralizers. The setpoint is 255 psig. Relieves to VCT.

NV-170 – VCT Relief set at 75 psig. Relieves to RHT.

NV-229 – Charging Pump Suction, protects the suction line. Set at 220 psig. Relieves to PRT.

NV-220 – Charging Pump Discharge at discharge of PD pump, protects piping if discharge valve closed and pump started. Set at 2735 psig. Relieves to VCT.

NV-93 – Seal Water Return Header, inside containment. Protects seal return line if isolated. Capacity equals maximum flow of pump seals and excess letdown. Set at 150 psig. Relieves to PRT.

NV-155 – Seal Water Return Header, outside containment. Protects piping if flow path isolated, with minimum capacity equal to CCP's mini-flow. Set at 150 psig. Relieves to VCT.

NV-20 – Charging line downstream of Regenerative heat exchanger. This valve is set at 200 psid to account for volumetric expansion of coolant on charging side if charging is isolated. Relieves downstream of NV-13B.

2.21 Valve Stem Leakoff Isolation Valves

Modifications for both Units have installed an isolation valve and a test valve to the valve stem leakoff for various NV valves, including the following: NV-240, 241, 242, 243, 244A, 245B, 219, 237, 238, 239, 803 and 137A. This isolation and test valve will aid in quickly identifying which of the aforementioned valves may have a primary packing leak.

2.22 Instrumentation and Controls

Objective # 6, 7

2.22.1 NV System Controls

NV Pumps – The Centrifugal Charging Pumps are controlled from the Main Control Board with "Start-Stop" pushbuttons, MC-10. They may also be controlled from the Auxiliary Shutdown Panel (ASP). There is a "Remote-Local" switch at the ASP to determine control.

BA Trans Pump – The Boric Acid Transfer Pumps are controlled from the Main Control Board with a 3-position switch, "Stop-Auto-Start", MC-10. They may also be controlled from the ASP. There is a "Remote-Local" switch at the ASP to determine control.

PD Pump – The Positive Displacement Pump is controlled from the Main Control Board with "Start-Stop" pushbuttons, MC-10. It may also be controlled from the ASP. There is a "Remote-Local" switch at the ASP to determine control. PD Pump start is interlocked such that Recirc Valve NV-1047A must be open and the Auxiliary Building Nonessential RN Header Isolation Valve RN-42A must be open. The pump will trip on Low Lube Oil Pressure, after a start time delay. The pump will trip when RN-42A goes closed for loss of cooling water protection. This trip occurs during Safety Injection.

NV-13B and NV-16A – The NV Supply to NC Loop Isolation Valves are controlled from the Main Control Board by "Open-Close" pushbuttons on MC-10. They may also be controlled from the ASP. There is a "Remote-Local" switch at the ASP to determine control. These valves Fail Open on loss of power.

NV-21A – The NV Spray to Pressurizer Isolation Valve is controlled from the Main Control Board by "Open-Close" pushbuttons on MC-10. It may also be controlled from the ASP with a manual loader. There is a "Remote-Local" switch at the ASP to determine control. The valve Fails Closed on loss of power.

NV-840 – The ND to Pressurizer Aux Spray Control Valve is controlled by a Manual Loader located on the Vertical Panel behind MC-10. The valve Fails Closed.

NV-34A, NV-50B, NV-66A and NV-82B – The NC Pump Seal Return Isolation Valves are controlled from the Main Control Board by "Open-Close" pushbuttons on MC-10. These valves Fail Open on loss of power.

NV-92A – The NC Pump Seal Bypass Return Header Isolation Valve is controlled from the Main Control Board by "Open-Close" pushbuttons on MC-10. The valve Fails Closed on loss of power.

NV-24B and NV-25B – The NC Loop To Excess Letdown Heat Exchanger Isolation Valves are controlled by "Open-Close" pushbuttons on MC-10. They may also be controlled from the ASP. There is a "Remote-Local" switch at the ASP to determine control. These valves Fail Closed on loss of power. These valves auto close on an S_S signal.

NV-27B – The Excess Letdown Heat Exchanger 3-Way Control Valve is controlled from the Main Control Board by "NCDT-VCT" pushbuttons on MC-10. The valve Fails to the VCT (normal) position on loss of power.

NV-94AC and NV-95B – The NC Pump Seal Return Containment Isolation Valves are controlled from the Main Control Board by "Open-Close" pushbuttons on MC-10. NV-94AC may also be controlled from the Standby Shutdown Facility. These valves will Auto-Close on an S_T signal.

The NC Makeup Control Switch is a 3-position rotary switch, Stop-Neutral-Start, controlled from the Main Control Board on MC-10. The switch will spring return to Neutral from the Start position.

7.0 DRAWINGS

7.1 NV System Composite (1/28/03)

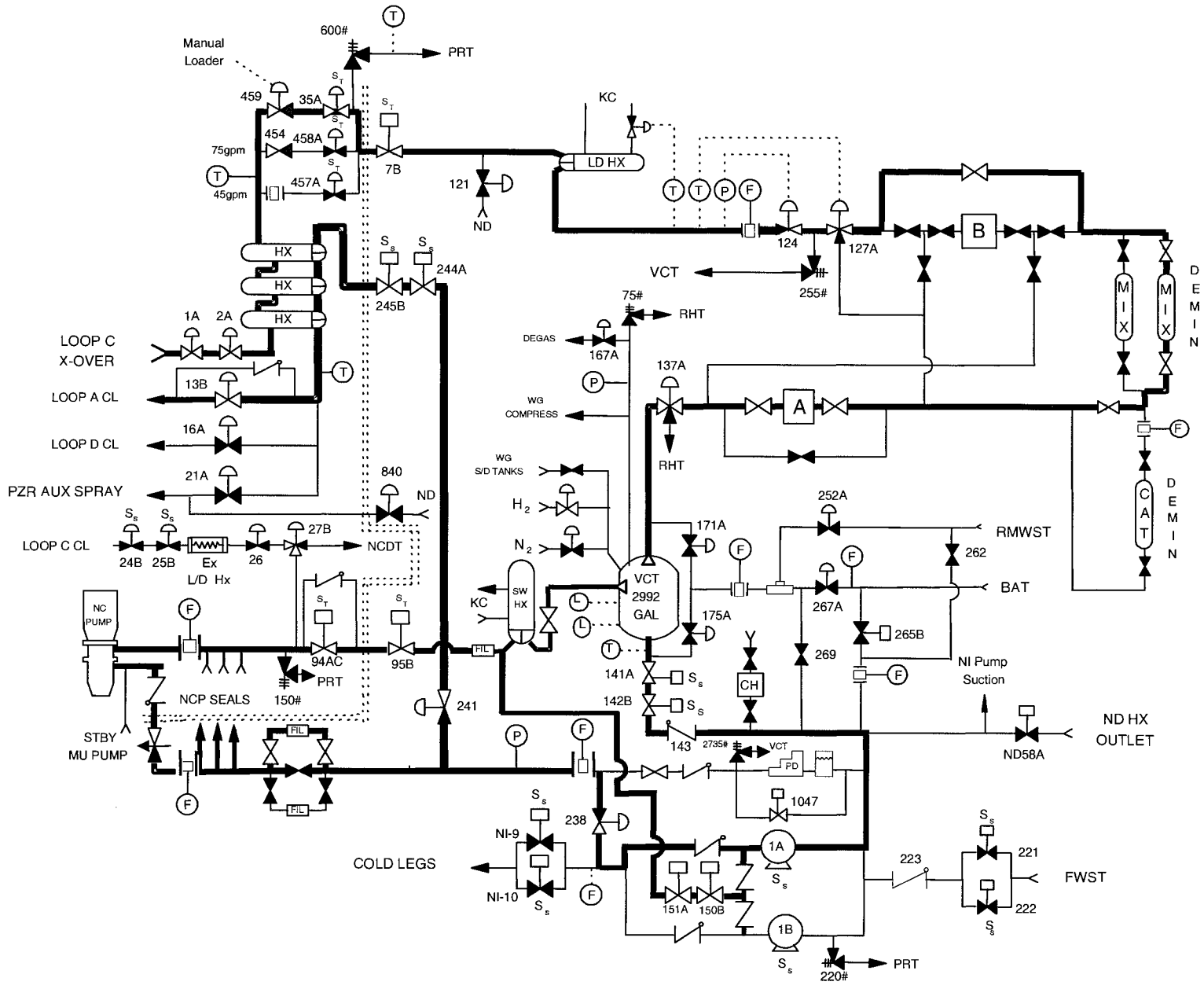

7.2 NV System Flow Balance (05/10/99)

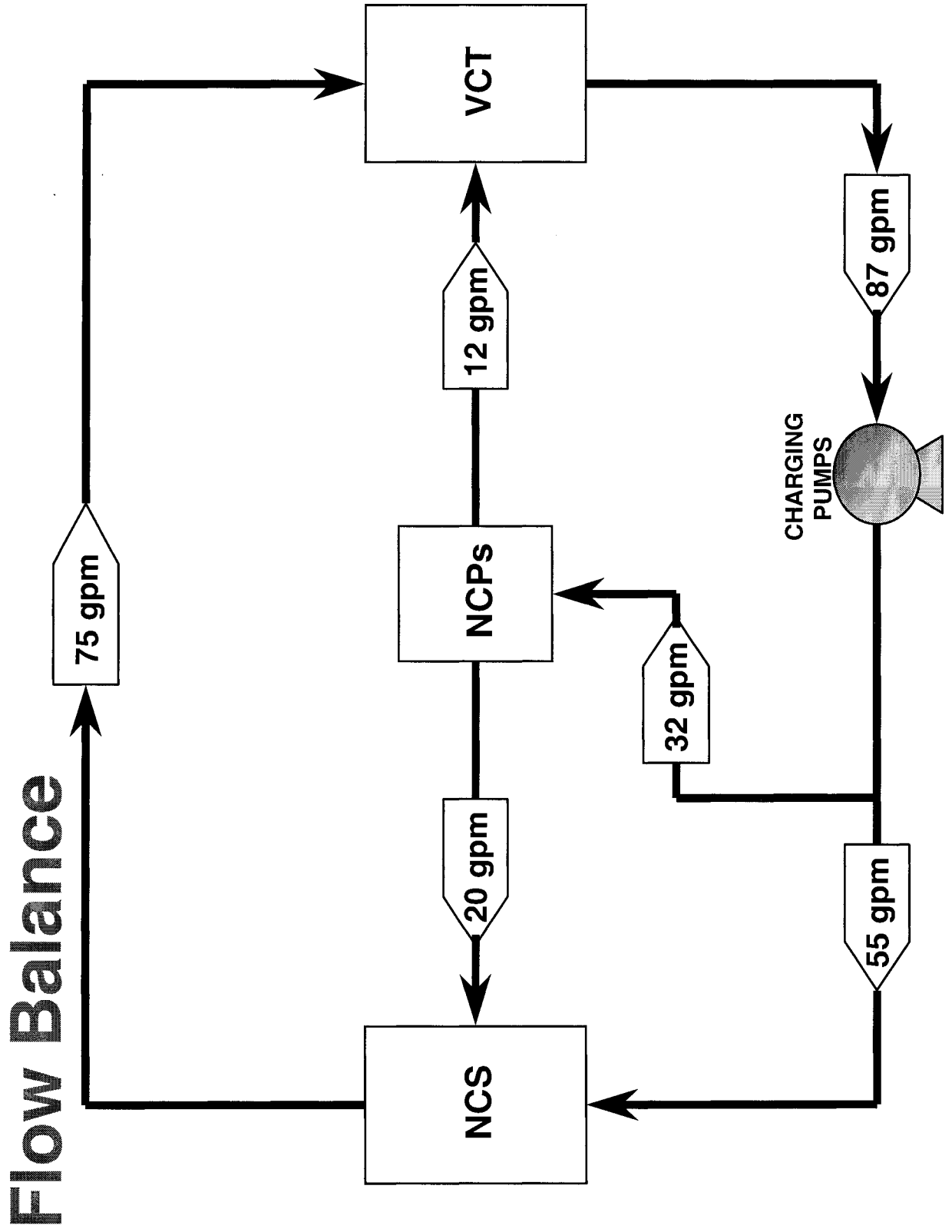

7.8 Seal Water Injection Flowpath (7/28/04)

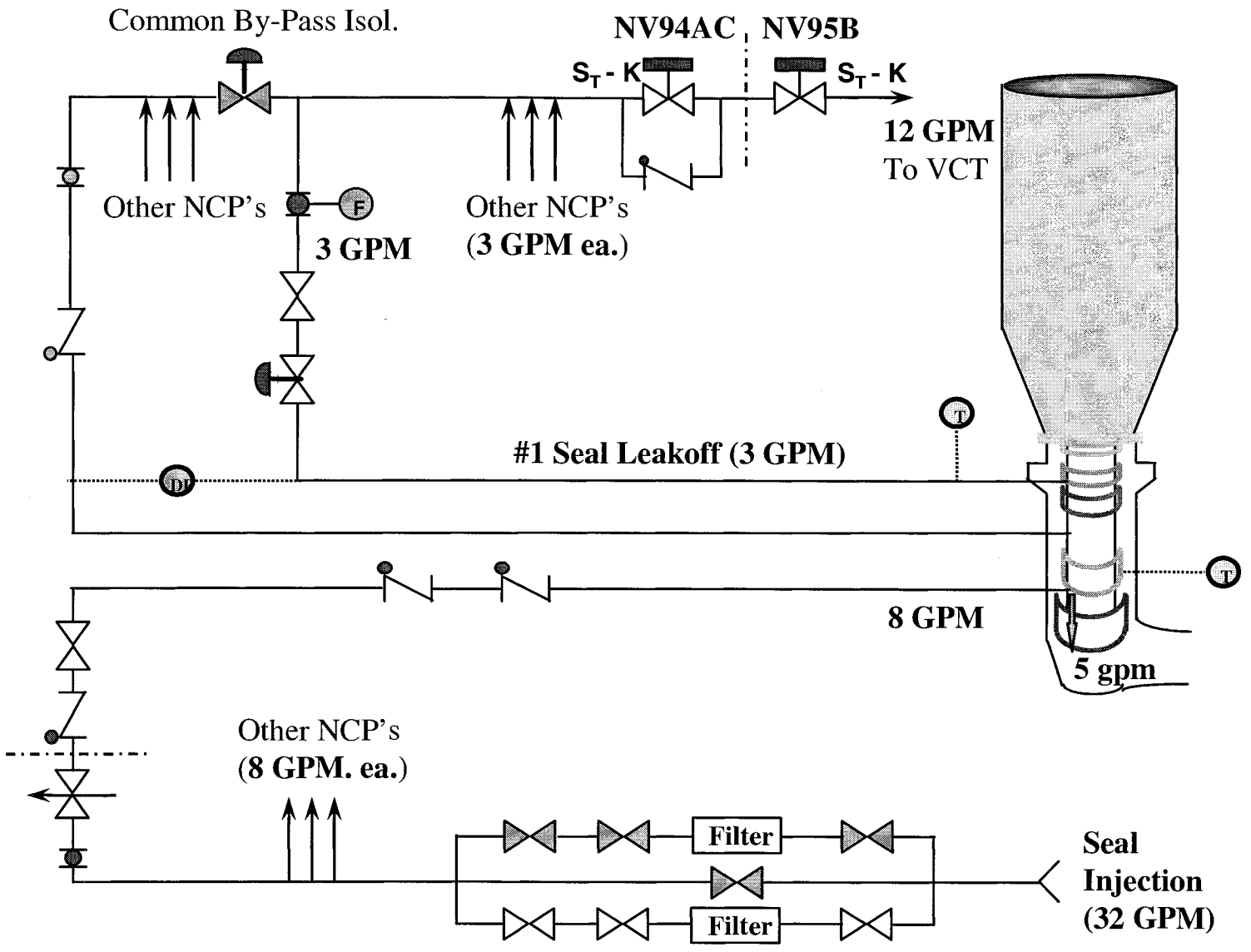

The discharge line from each safety also has a temperature element which provides meter indication on 1(2)MC10 and an alarm on **1(2)AD6 "PZR Safety Discharge Hi Temp " (setpoint 20^0 F above ambient on one out of three).** This indication alerts the operator of leaking/lifting safety valve(s). The discharge line also has an acoustic monitor which "listens" for sounds of a safety valve discharge. This monitor provides input to an alarm on **1(2)AD6 "NC1, 2, or 3 FLO DETECTED"** and also to a control board light **"FLOW/NO FLOW".** Each pressurizer safety valve is equipped with an accelerometer to detect leakage. The accelerometers provide a signal for each pressurizer safety valve at panel ALDM-1 (733 electrical penetration room). Operations can direct an NLO and an IAE technician to this panel when flow has been detected by the control room alarm. This local panel can give a bar graph readout "relative" to leakage indication with IAE assistance This is not a GPM read out but rather a 1 to 10 scale of 0% to 100% flow anticipated from a pressurizer safety at full temperature and pressure.

2.9 Pressurizer Relief Tank (PRT)

Objective # 19

The purpose of the pressurizer relief tank is to condense and cool discharge water from the PORVs and safeties. The tank normally contains water and a N_2 cover gas. The N_2 gas overpressure is used to prevent the O_2 from entering the tank and forming an explosive mixture with the H_2 gas present. The N_2 gas is supplied from bulk N_2 (GN system) or from Shutdown Tank B. When the relief valves lift, the steam is discharged into the PRT through a sparger pipe (under water). The PRT design is based on the requirement to:

- be able absorb the pressurizer discharge during a step load decrease of 10% (equivalent to 110% continuous discharge from the pressurizer).
- the spray rate is designed to cool the tank from 200^0 F to 120^0 F in approximately one hour following the design discharge.
- the volume of the N_2 gas in the PRT is selected to limit the maximum pressure following a design discharge to 50 psig.

The PRT is not designed for relief valve continuous discharge, therefore, it has two rupture discs designed to prevent it from exceeding its design pressure of 100psig. The rupture disc setting is also 100 psig which is twice the calculated pressure resulting from the maximum design safety valve discharge. The tank and rupture discs are also designed for full vacuum to prevent tank collapse if the contents cool following a discharge without nitrogen being added.

The PRT can be vented to containment atmosphere through a manual vent valve at the tank (NC51). This line has a capped connection designed to accept a filter assembly to reduce radioactivity released from the tank to containment. The PRT can also be aligned to the waste gas system for venting.

The PRT is equipped with internal spray and drain system to cool the tank. The PRT is cooled by recirculating its contents with the Reactor Coolant Drain Tank (NCDT/) Pump through the NCDT heat exchanger. If the NCDT pumps are unavailable, the PRT can be cooled by increasing PRT N_2 pressure, initiating PRT spray flow from the RMWST while cycling NC107 maintain level. The PRT has a temperature indication on 1(2)MC10 and an alarm on **1(2)AD6 "PRT Hi Temp" (setpoint 114^0 F)** to inform the operator that the tank needs cooling. The PRT has level and pressure indication on 1(2)MC10 and alarms on **1(2)AD6 "PRT Hi Press" (setpoint 8 psig)** and **"PRT Abnormal Level" (setpoints hi 88% and low 64%).**

Refer to OP/1(2)/A/6150/004 Pressurizer Relief Tank, for PRT operations.

Examination Outline Cross-reference:	Level	RO	SRO
	Tier #	2	
	Group #	1	
	K/A #	008 K2.02	
	Importance Rating	3.0	

(Knowledge of bus power supplies to the following: CCW pump, including emergency backup)

Proposed Question: Common 6

With Unit 2 at 100% power, the following conditions exist:

- B Train equipment in operation.
- The 2B1 KC Pump trips on overcurrent and remains unavailable.
- The operator implements the appropriate response procedures and restores the KC System to normal operation.

Which ONE (1) of the following identifies the electrical power source(s) supplying the operating Component Cooling (KC) Pump(s)?

A. 2ELXA and 2ELXB.

B. 2ETA and 2ETB.

C. 2ELXA.

D. 2ETA.

Proposed Answer: **D**

Explanation (Optional):

The operator will enter AP21, Loss of KC or KC System Leakage and place the A Train in service using Enclosure 4. During the performance of this Enclosure both the 2A1 and 2A2 KC Pumps will be started and the 2B2 KC Pump will be stopped.

A. Incorrect. ELXA and ELXB are 600V Essential Load Center, not 4160 V Buses, and this suggests that train A and 2B2 pumps will be running upon completion of AP21.

B. Incorrect. While the KC Pumps are powered from 2ETA (2A1 and 1A2) and 2ETB (2B1 and 2B2),this suggests that train A and 2B2 pumps will be running upon completion of AP21.

C. Incorrect. While the completion of AP21 will start the A Train Pumps and stop the remaining B Train Pump, ELXA is 600V Essential Load Centers, not 4160 V Buses.

D. Correct. Section 2.1 of OP-MC-PSS-KC (KC System Lesson Plan) states that the KC Pumps are powered from the 4160 volt vital busses (ETA, ETB). Section 9.2.4.2 of the McGuire UFSAR states that the systems function as "two independent subsystems," indicating that the power supplies are train specific. AP21 will direct the operator to start the A Train Pumps and stop the remaining B Train Pump.

Technical Reference(s)	OP-MC-PSS-KC p15 Rev.23	(Attach if not previously provided)
	UFSAR Section 9.2.4.2 (11/06)	(Including version or revision #)
	AP21, Step 9c and Enclosure 4, Rev 9	

Proposed references to be provided to applicants during examination: None

Learning Objective: PSS-KC 6, AP-AP21 #2 (As available)

Question Source:
- Bank # _____
- Modified Bank # 3877 (Note changes or attach parent)
- New _____

Question History: Last NRC Exam NA

Question Cognitive Level:
- Memory or Fundamental Knowledge X
- Comprehension or Analysis _____

10 CFR Part 55 Content:
- 55.41 7, 10
- 55.43 _____

Comments:
KA is matched because the item evaluates knowledge of KC (CCW) pump power supplies in an abnormal plant condition involving swapping of trains

Bank Question 3877

PSSKC025 PSSKC025
1 Pt Which ONE (1) of the following is the normal source of power to Component Cooling Water pump 1B2?

A. 1ELXA.

B. 1ELXB.

C. 1ETA.

D. 1ETB.

Objective #6

The KC Pumps are powered from the 4160 volt vital busses (ETA, ETB).

2.2. Component Cooling Heat Exchangers (KC Heat Exchanger)

Designed to provide the required heat transfer for all modes of operation. One heat exchanger is required for normal operation. One heat exchanger is adequate for Engineered Safeguards (ES) heat transfer requirements.

The KC Heat Exchanger is a horizontal, straight tube, single pass heat exchanger with RN on the tube side due to the tendency of fouling (Easier to clean), and KC on the shell side. The heat exchangers are located at the discharge of the KC Pumps to ensure KC pressure remains higher than RN pressure for the purpose of preventing in-leakage of RN water.

Design parameters are as follows:

Pressure ..... 150 psig

Temperature ..... 200 °F

Shell side flow (KC) ..... 2,610,751 lbm/hr - ≈6200 gpm

Tube side flow (RN) ..... 4,976,600 lbm/hr - ≈10,000 gpm

Manual loader located in Control Room to adjust RN flow to KC Heat Exchanger.

2.3. Component Cooling Surge Tank

There is one component cooling surge tank per unit. It is divided by a baffle plate into two separate compartments for train separation. The tank is located at the high point in the system to facilitate filling and venting of the system and provide NPSH for the KC Pumps. Maximum water volume of the KC Surge Tank is 6600gallons with normal level maintained at approximately 5800 gallons. Level indications for each compartment of the KC Surge Tanks is available in the Control Room (0-9 ft.). An annunciator "KC Surge Tk LVL Abnormal" is provided to indicate high (7 ft, 2 in.) and low (4.0 ft.) level conditions.

ACTION/EXPECTED RESPONSE	RESPONSE NOT OBTAINED
9. (Continued)	
__ b. Check standby KC Surge Tank Level - GREATER THAN 2 FT.	b. Perform the following: 1) Initiate YM makeup to KC Surge Tank as follows: a) Dispatch operator to open the following valves as required to maintain KC Surge Tank level: __ • To makeup to 1A KC Surge Tank, unlock and open 1KC-107 (1A KC Surge Tank Compartment YM Supply Isol) (aux bldg, 767+2, JJ-57, under grating, between KC surge tanks) __ • To makeup to 1B KC Surge Tank, unlock and open 1KC-111 (1B KC Surge Tank Compartment YM Supply Isol) (aux bldg, 767+2, JJ-58, under grating, between KC surge tanks). __ b) Adjust makeup rate as required to prevent overflow of KC Surge Tank (approximately 8.5 ft). __ 2) **IF AT ANY TIME** it is determined that YM makeup is inadequate, **THEN** align RN Makeup to KC **PER** Enclosure 3 (Aligning RN Makeup to KC Surge Tank) as required. __ 3) Do not continue until surge tank level is greater than 2 ft.
c. Start standby KC train **PER** one of the following: __ • To start A Train , **GO TO** Enclosure 4 (Startup of 1A KC Train) OR __ • To start B Train , **GO TO** Enclosure 5 (Startup of 1B KC Train).	

ACTION/EXPECTED RESPONSE	RESPONSE NOT OBTAINED
__ 29. **Stop 1B1 and 1B2 KC pumps.**	
__ 30. **Check KC flow - LESS THAN 4000 GPM PER OPERATING KC PUMP.**	**Throttle the following as required to reduce KC flow to less than 4000 GPM per KC pump:** **CAUTION** **If NC temperature is greater than 200°F, then KC flow must be maintained greater than 2000 GPM to operating ND train.** __ • **IF** 1A KC pumps are feeding 1B ND HX (through cross-tie), **THEN** throttle 1KC-81B (KC To B ND HX). __ • 1KC-56A (KC To A ND HX) __ • KC to KF flow.
__ 31. **Check ND pumps - ANY ON PRIOR TO ENTERING THIS PROCEDURE.**	__ **GO TO Step 37.**

3. Cool the spent fuel pool water.
4. Provide cooling to dissipate waste heat from various primary station components during normal operation and under accident conditions.

Active system components considered vital to the cooling function are redundant. Such redundancy of components does not degrade the performance or reliability of any system served by the Component Cooling System. Any single passive failure in this system does not prevent the system from performing its design function.

The design provides means for the detection of radioactivity entering the system from the Reactor Coolant System and its associated auxiliary systems, and includes provision for isolation of system components.

9.2.4.2 System Description

The Component Cooling System normally functions as two independent subsystems. A summary flow diagram for the Component Cooling System is shown in Figure 9-57. The Component Cooling System consists of eight (four per unit) component cooling pumps, four (two per unit) component cooling heat exchangers, two (one per unit) split volume surge tanks, one drain tank, one drain tank pump and associated valves, piping, and instrumentation.

The equipment receiving cooling flow is arranged in parallel circuits with the component cooling pumps and component cooling heat exchangers placed at a common supply and return location for the various cooling circuits. The surge tanks are connected to the suction piping of the component cooling pumps, and are placed at the highest points in the system in order to facilitate easy filling and venting of the system.

Cooling water is normally available to all components served by the system, even though one or more of these components may be individually isolated. Valves actuated by an Engineered Safety Features signal are used to provide the residual heat removal heat exchangers with cooling water should it become necessary to place these components in service under loss-of-coolant accident conditions.

The four component cooling heat exchangers are of the shell and straight tube type. Raw river water from the Nuclear Service Water System (Section 9.2.2) is circulated through the straight tubes.

The heat exchangers are placed at the discharge of the component cooling pumps in order to provide a higher component cooling water pressure, relative to service water pressure, for the purpose of preventing in-leakage of nuclear service water.

The eight component cooling pumps are horizontal, centrifugal units. These pumps receive electric power from normal or emergency sources. Mechanical seals are provided to minimize leakage.

Two split-volume surge tanks, one per unit, accommodate expansion, contraction, and in-leakage of water and in the event of a leak in the system, assures a continuous supply of component cooling water until the leak can be isolated. The normal supply of makeup water is provided from demineralized water storage tanks through the make up supply header connected to the surge tank. An assured supply of makeup water is available from the Nuclear Service Water System. Because the tanks are normally vented to the atmosphere, a radiation monitor is provided at the discharge of each component cooling heat exchanger. The monitor actuates an alarm if the radiation reaches a preset level above the normal background and sends a signal to close the surge tank vent isolation valve. A major portion of the component cooling system material is carbon steel. Therefore, corrosion is controlled by chemical addition to the surge tanks.

The component cooling drain tank and component cooling drain tank pump are located at the lowest point in the system. All equipment drains and low point drains are piped to the drain tank and then pumped to the appropriate component cooling surge tank, thus minimizing makeup and waste treatment problems

CLASSROOM TIME (Hours)

NLO	NLOR	LPRO	LPSO	LOR
2.0	2.0	2.0	2.0	2.0

OBJECTIVES

	OBJECTIVE	NLO	NLOR	LPRO	LPSO	LOR
1	State the purpose of the Component Cooling System.	X	X	X	X	
2	Draw the Component Cooling System per drawing 7.2.	X	X	X	X	
3	List the loads cooled by the Component Cooling System.	X	X	X	X	
4	Describe the operation (including any auto-alignments) of the Component Cooling System during the following modes:					
	• Normal Operation	X	X	X	X	
	• Following Blackout, Safety Injection, Phase A, Phase B Isolation and EMF actuation.	X	X	X	X	X
5	Describe the automatic action(s) that occur if Component Cooling flow from the thermal barriers goes high.	X	X	X	X	X
6	List the power supplies for the Component Cooling Pumps.	X	X	X	X	
7	Evaluate plant parameters and status indicators to determine any abnormal system conditions that may exist while performing inplant surveillance on the Component Cooling System.	X	X	X	X	
8	Evaluate plant parameters and status indicators to determine any abnormal system conditions that may exist.			X	X	X
9	Describe why caution must be taken when draining or venting the Component Cooling System (Corrosion Inhibitor).	X	X	X	X	X

CLASSROOM TIME (Hours)

NLO	NLOR	LPRO	LPSO	LOR
		1.0	1.0	1.0

OBJECTIVES

	OBJECTIVE	NLO	NLOR	LPRO	LPSO	LOR
1	Explain the purpose for AP/21 (Loss of KC or KC System Leakage). AP21001			X	X	X
2	Analyze the mitigating strategy (major actions) contained in the procedure. AP21002			X	X	X
3	Given scenarios describing accident events and plant conditions, evaluate the basis for any caution, note, or step. AP21003			X	X	X
4	Given scenarios describing accident events and plant conditions, evaluate conditions which require application of continuous action steps. AP21004			X	X	X

Examination Outline Cross-reference:	Level	RO	SRO
	Tier #	2	
	Group #	1	
	K/A #	008 K4.01	
	Importance Rating	3.1	

(Knowledge of CCWS design feature(s) and/or interlock(s) which provide for the following: Automatic start of the standby pump.

Proposed Question: Common 7

Unit 1 is operating at 30% power with the following conditions:

- Train B KC in operation with both the 1B1 and 1B2 KC Pumps operating.
- Train A KC is in standby with both the 1A1 and 1A2 KC pump off.

Which ONE (1) of the following events will automatically start the 1A1 KC Pump?

A. A leak on the shell side of the 1B KC Heat Exchanger.

B. The normal supply breaker to 1ETB opens.

C. An event causing Containment pressure to increase to 1.5 psig.

D. The 1B2 trips on overcurrent.

Proposed Answer: **C**

Explanation (Optional):

A. Incorrect. A pump that is not running but available will only start on an Ss or BO signal. This event will cause neither condition to occur. This is plausible because the operator must know that the standby pumps will NOT start on a low header pressure that will be caused by a leak on the shell side of the 1B KC Heat Exchanger.

B. Incorrect. While a pump that is not running but available will start on a BO signal, the function is train specific. This event is on the B Train essential bus and will auto start the 1B1 and 1B2 KC Pumps after the 1B DG starts and closes onto 1ETB. The event will NOT auto start the 1A1 or 1A2 KC Pumps.

C. Correct. Section 2.1 of OP-MC-PSS-KC states that the pumps automatically start on a Safety Injection (Ss) or Blackout (BO) signal. Section 3.1 of OP-MC-ECC-ISE states that an Ss will occur on Hi-

Containment Pressure of > 1.0 psig. This will automatically start both the 1A1 and the 1A2 KC Pumps.

D. Incorrect. A pump that is not running but available will only start on an Ss or BO signal. This event will cause neither condition to occur. This is plausible because the operator must know that the standby pumps will NOT start on a low system flow condition or abnormal pump breaker alignment that will be caused by a 1B2 Pump trip.

Technical Reference(s)	OP-MC-PSS-KC p13 Rev. 23	(Attach if not previously provided)
	OP-MC-ECC-ISE p21 Rev. 30	(Including version or revision #)

Proposed references to be provided to applicants during examination: _____

Learning Objective: PSS-KC #4 (As available)

Question Source:	Bank #		
	Modified Bank #		(Note changes or attach parent)
	New	X	

Question History: Last NRC Exam _____

Question Cognitive Level:	Memory or Fundamental Knowledge	
	Comprehension or Analysis	X

10 CFR Part 55 Content:	55.41	7
	55.43	

Comments:

KA is matched because item directly evaluates auto start feature of a KC pump in standby

Reactor Building Header

- **Reactor Vessel Support Coolers (isolation valves closed)**
- **Reactor Coolant Pump Motor Upper and Lower Bearing Oil Coolers**
- **Reactor Coolant Pump Thermal Barrier Heat Exchangers**
- **Reactor Coolant Drain Tank Heat Exchanger**
- **Excess Letdown Heat Exchanger**

1.2.2. Chemical Treatment of KC System

A major portion of the system is made of carbon steel. A combination of chemicals are added to the system to help minimize corrosion. These chemicals include Sodium Molybdate (corrosion inhibitor), Tolytriazole (TTA) (a copper corrosion inhibitor), and Sodium Tetraborate (Borax) (a pH buffer).

Objective #9

Care must be exercised when handling these chemicals or chemically treated KC water. **Effects of exposure to these chemicals may include eye, skin and respiratory irritation, dermatitis, headache, nausea and coughing.**

1.2.3. KC System radiation levels are monitored by EMF-46A, B. These EMF's sample the discharge of the KC heat exchanger to detect any radioactive leaks into the KC System.

Objective #10

2.0 COMPONENT DESCRIPTION

2.1. Component Cooling Water Pumps (KC Pumps)

The KC Pumps are horizontal shaft, centrifugal pumps equipped with mechanical seals to minimize leakage. They are designed to provide the maximum cooling water requirements for the system. **They can be operated from the Control Room or ASP by two position START/STOP pushbuttons**. Normal operations parameters are as follows:

Pressure.....95-105 psig

Flow .....2000-3000 gpm Runout = 4000 gpm/pump

Objective #4

Minimum flow is maintained by an automatic recirc valve. Controls for these valves are located in the Control Room. Each valve will open when KC Pump discharge flow decreases to 1000 gpm and closes when flow increases to 1500 gpm. Flowpath is to the KC Surge Tank.

The pumps automatically start on a Safety Injection (S_s) or Blackout (BO) signal.

3.0 SYSTEM OPERATION

3.1 Normal Operation

Objective # 6

Safety Injection Actuation (S_S)

Actuation Signals and logic

Signal	Setpoint	Logic	Interlocks	Reason
Manual		$^1/_2$ pushbuttons		Operator Judgment
Lo-pressurizer pressure	<1845 psig	$^2/_4$ channels	P-11	LOCA Protection
Hi-containment pressure	>1.0 psig	$^2/_3$ channels		LOCA and Steam Break Protection

LOCA protection is provided by the Low Pressurizer Pressure (1845 psig) and the High Containment Pressure (1 psig) Safety Injection Signals.

Steam break protection is provided by the High Containment Pressure (1 psig) Safety Injection Signal.

Objective # 7

Safety Injection Signal (S_S) initiates the following functions:

- Reactor Trip (P4)
- D/G sequencer which in turn starts the following:
  1) **Centrifugal Charging Pumps (NV)**
  2) **Safety Injection Pumps (NI)**
  3) **Residual Heat Removal Pumps (ND)**
  4) **Idle train of Component Cooling Pumps (KC)**
  5) **Idle train of Nuclear Service Water Pumps (RN)**
  6) **Motor Driven Auxiliary Feedwater Pumps (CA)**
  7) Emergency Diesel Generator
  8) Provides start signal to normally running auxiliary building filtered exhaust fans and trips non-filtered exhaust fans

CLASSROOM TIME (Hours)

NLO	NLOR	LPRO	LPSO	LOR
2.0	2.0	2.0	2.0	2.0

OBJECTIVES

	OBJECTIVE	NLO	NLOR	LPRO	LPSO	LOR
1	State the purpose of the Component Cooling System.	X	X	X	X	
2	Draw the Component Cooling System per drawing 7.2.	X	X	X	X	
3	List the loads cooled by the Component Cooling System.	X	X	X	X	
4	Describe the operation (including any auto-alignments) of the Component Cooling System during the following modes:					
	• Normal Operation	X	X	X	X	
	• Following Blackout, Safety Injection, Phase A, Phase B Isolation and EMF actuation.	X	X	X	X	X
5	Describe the automatic action(s) that occur if Component Cooling flow from the thermal barriers goes high.	X	X	X	X	X
6	List the power supplies for the Component Cooling Pumps.	X	X	X	X	
7	Evaluate plant parameters and status indicators to determine any abnormal system conditions that may exist while performing inplant surveillance on the Component Cooling System.	X	X	X	X	
8	Evaluate plant parameters and status indicators to determine any abnormal system conditions that may exist.			X	X	X
9	Describe why caution must be taken when draining or venting the Component Cooling System (Corrosion Inhibitor).	X	X	X	X	X

Examination Outline Cross-reference:	Level	RO	SRO
	Tier #	2	
	Group #	1	
	K/A #	010 K1.07	
	Importance Rating	2.9	

(Knowledge of the physical connections and/or cause-effect relationships between the PZR PCS and the following systems: Containment)

Proposed Question: Common 8

Unit 2 is operating at 100% with the Pressurizer Pressure Control Selector Switch in the **1-4** position.

Which ONE (1) of the following Pressurizer Pressure Channel failure events would result in EMF 38, Containment Particulate Radiation Monitor, going into alarm, assuming no operator action is taken and all systems operate as designed?

A. Channel 1 fails low.

B. Channel 2 fails high.

C. Channel 3 fails high.

D. Channel 4 fails low.

Proposed Answer: **A**

Explanation (Optional):

Section 2.9 of OP-MC-PS-NC indicates that the PORVs discharge to the PRT which is "not designed for continuous discharge, therefore, it has two rupture discs designed to prevent it from exceeding its design pressure of 100 psig." The rupture discs open to the Containment atmosphere. If left unabated in this event, the PRT rupture discs will rupture and open the contents of the PRT to the Containment atmosphere. This can be identified by a number of parameters such as an increase in Containment Pressure, temperature and radiation levels.

A. Correct. According to Section 2.2 of OP-MC-PS-IPE states that in the 1-4 position CH 1 inputs the pressure master controller (heaters, sprays, Low/Hi Press Dev. Annuns, & PORV-34) and CH 4 is used to actuate PORVs 32 & 36 at 2335 psig and feed a "PZR HI PRESS" annunciator at 2310 psig. With Channel 1 failed low the input to the Master Pressure Controller will call for maximum heater output, and the spray valves will not automatically

open. Pressurizer pressure will increase to the PORV setpoint on Channels 2, 3 and 4. When Channel 4 reaches 2385 psig PORVs 1NC-32B and 1NC-36B will open and discharge to the PRT, lowering Pressurizer pressure until Channel 3 closes both PORVs at 2185 psig. This action will cause actual Pzr Pressure in Channels 2, 3 and 4 to increase to 2385 psig where the process will repeat itself. With no operator action, the PRT rupture disc will fail at 100 psig in the PRT and discharge its contents to the Containment causing 1EMF 38 indication to increase.

B. Incorrect. This would be an appropriate response if the Pressurizer Pressure Selector Switch is in 1-2 or 3-2 because Channel 2 failing high would open both 1NC-32B and 1NC-36B until channel 3 reaches 2185 psig. When the PORVs closed on the low pressure interlock, Pressurizer pressure will immediately rise, clearing the low pressure interlock with Channel 2 still above the PORV opening setpoint. The two PORVs would essentially open and close repeatedly causing in effect a continuous PORV discharge to the PRT.

C. Incorrect. Channel 3 failing high will fail the low pressure interlock on PORVs 1NC-32B and 36B, such that it will never clear. However there will be no open signal for the PORVs, and these valves will rmain closed.

D. Incorrect. Channel 4 failing low will fail the low pressure interlock on PORV 1NC-34A, such that the interlock will always prevent this valve from opening. Additionally, PORVs 1NC32B and 1NC-36B receive an open signal from this channel at 2385 which will NOT be attained with the channel failed low.

Technical Reference(s)	OP-MC-PS-IPE p17, 51, and 55 (Rev. 27)	(Attach if not previously provided)
	OP-MC-PS-NC p39 (Rev. 30)	(Including version or revision #)

Proposed references to be provided to applicants during examination: None

Learning Objective:	PS-NC #19 PS-IPE #12		(As available)
Question Source:	Bank #		
	Modified Bank #		(Note changes or attach parent)
	New	X	

Question History: Last NRC Exam

Question Cognitive Level:	Memory or Fundamental Knowledge	_____
	Comprehension or Analysis	X

10 CFR Part 55 Content:	55.41	7
	55.43	_____

Comments:

KA is matched because the item evaluates knowledge of a PZR PCS failure that will result in changing containment conditions if no action is taken

The discharge line from each safety also has a temperature element which provides meter indication on 1(2)MC10 and an alarm on **1(2)AD6 "PZR Safety Discharge Hi Temp " (setpoint 20^0 F above ambient on one out of three).** This indication alerts the operator of leaking/lifting safety valve(s). The discharge line also has an acoustic monitor which "listens" for sounds of a safety valve discharge. This monitor provides input to an alarm on **1(2)AD6 "NC1, 2, or 3 FLO DETECTED"** and also to a control board light **"FLOW/NO FLOW".** Each pressurizer safety valve is equipped with an accelerometer to detect leakage. The accelerometers provide a signal for each pressurizer safety valve at panel ALDM-1 (733 electrical penetration room). Operations can direct an NLO and an IAE technician to this panel when flow has been detected by the control room alarm. This local panel can give a bar graph readout "relative" to leakage indication with IAE assistance This is not a GPM read out but rather a 1 to 10 scale of 0% to 100% flow anticipated from a pressurizer safety at full temperature and pressure.

2.9 Pressurizer Relief Tank (PRT)

Objective # 19

The purpose of the pressurizer relief tank is to condense and cool discharge water from the PORVs and safeties. The tank normally contains water and a N_2 cover gas. The N_2 gas overpressure is used to prevent the O_2 from entering the tank and forming an explosive mixture with the H_2 gas present. The N_2 gas is supplied from bulk N_2 (GN system) or from Shutdown Tank B. When the relief valves lift, the steam is discharged into the PRT through a sparger pipe (under water). The PRT design is based on the requirement to:

- be able absorb the pressurizer discharge during a step load decrease of 10% (equivalent to 110% continuous discharge from the pressurizer).
- the spray rate is designed to cool the tank from 200^0 F to 120^0 F in approximately one hour following the design discharge.
- the volume of the N_2 gas in the PRT is selected to limit the maximum pressure following a design discharge to 50 psig.

The PRT is not designed for relief valve continuous discharge, therefore, it has two rupture discs designed to prevent it from exceeding its design pressure of 100psig. The rupture disc setting is also 100 psig which is twice the calculated pressure resulting from the maximum design safety valve discharge. The tank and rupture discs are also designed for full vacuum to prevent tank collapse if the contents cool following a discharge without nitrogen being added.

The PRT can be vented to containment atmosphere through a manual vent valve at the tank (NC51). This line has a capped connection designed to accept a filter assembly to reduce radioactivity released from the tank to containment. The PRT can also be aligned to the waste gas system for venting.

2.0 COMPONENT DESCRIPTION

2.1 Pressurizer Pressure Channels

Objective #3

The pressurizer pressure transmitters are also called narrow range pressure transmitters as they span a range of pressure from 1700 to 2500 psig. This range encompasses all the setpoints for control and protective actions that need be taken for power operating conditions. The pressure transmitters (channels 1 through 4) tap off the wet reference legs of the pressurizer level transmitters channels 1 through 3. (See drawing 7.2 Pressurizer Pressure and Level Indication (8/22/95) for specifics.) Each channel is displayed on the MCB, with CH 1 also displayed on the Auxiliary Shutdown Panel (ASP). Most control and alarm functions are normally provided from channels 1 and 2. A pressurizer pressure control selector switch is used to replace channel 1 with channel 3 or channel 2 with channel 4 for channel testing or instrument failure. Another pressurizer pressure selector switch will select one of the four channels of pressurizer pressure to the pressure recorder.

2.2 Pressurizer Pressure Control Selector Switch

Objective #3

Refer to Drawing 7.3, Composite Pressurizer Pressure Control. Pressure is selected from the available pressurizer pressure channels via the pressurizer pressure control selector switch located on the MCB. This selector switch has three positions for lining up the pressure transmitters to the control circuitry. Above **each** position of the switch the **two** selected transmitters (channels) are marked. The first listed channel inputs to the master controller and the second listed channel is used to actuate PORVs 32 & 36. The selector switch positions are 1-2, 1-4, and 3-2. A summary of the resulting control of the different positions is as follows:

- **1-2** This is the normally selected position. CH 1 inputs the pressure master controller (heaters, sprays, Low/Hi Press Dev. Annuns, & PORV-34) and CH 2 is used to actuate PORVs 32 & 36 at 2335 psig and feed a "PZR HI PRESS" annunciator at 2310 psig.

- **1-4** This is selected if CH 2 in test or fails. CH 1 still inputs the master controller, but CH 4 is used to actuate PORVs 32 & 36. Note that CH 4 is still used for the 2185 block on PORV 34.

- **3-2** This is selected if CH 1 in test or fails. CH 3 inputs the pressure master controller, CH 2 still is used to actuate PORVs 32 & 36. Note that CH 3 is still used for the 2185 block on PORVs 32 & 36.

7.0 DRAWINGS

7.1 Simplified Pressurizer Pressure Control 02/03/97

Objective #2

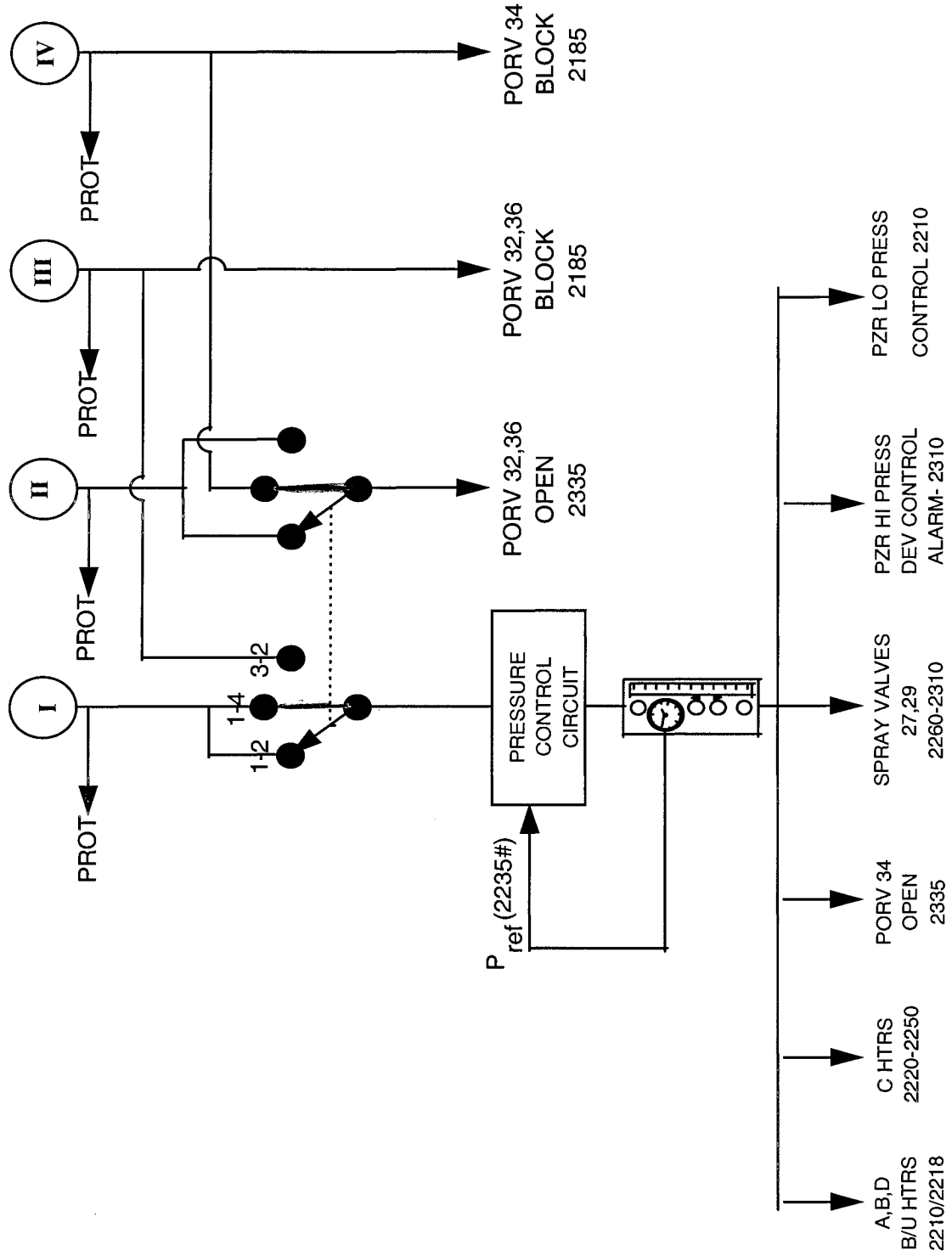

7.3 Composite Pressurizer Pressure Control 9/21/95

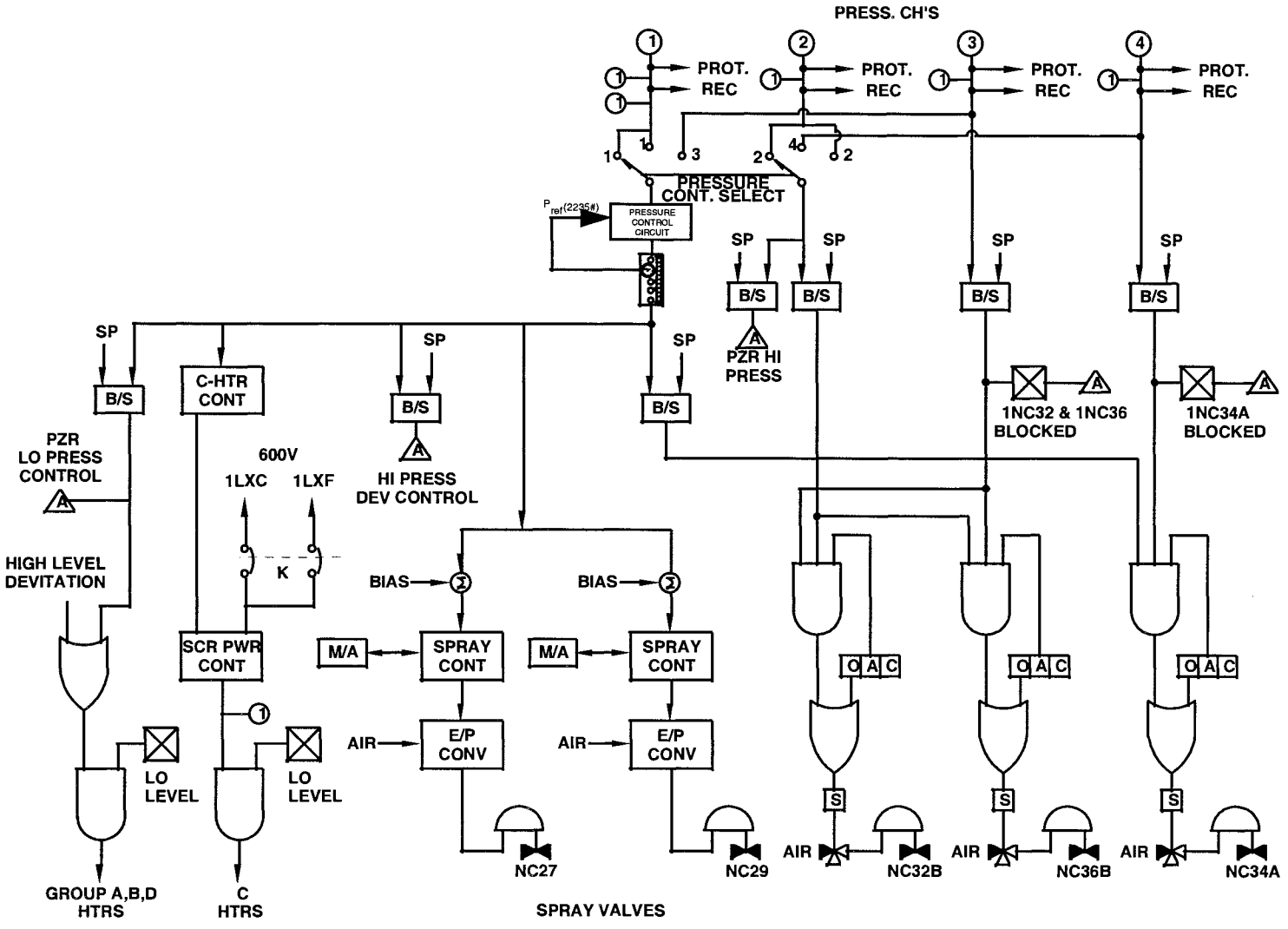

OBJECTIVES

	OBJECTIVE	NLO	NLOR	LPRO	LPSO	LOR
12	Concerning the Pzr cold and hot calibrated level indication:					
	• state the purpose of this indication		X	X	X	
	• describe how the operator corrects the indicated level for temperature		X	X	X	X
	• state the problems which can occur if the level is not corrected for temperature		X	X	X	X
13	State the purpose of the pressurizer power operated relief valves.	X	X	X	X	
14	List the parameters and setpoints associated with the NCS relief valves.	X	X	X	X	
15	Describe the indications which would be used to identify a leaking Pzr PORV or safety.		X	X	X	X
16	Concerning the Pzr PORV loop seals:					
	• what was their original purpose		X	X	X	
	• why are they continuously drained during operation		X	X	X	
	• describe the operational concern of leaving the drain valve open while its associated PORV is leaking		X	X	X	X
	• state from where the loop seal drain valves are operated.		X	X	X	X
17	State the purpose of the Pzr Code safety valve.	X	X	X	X	
18	Concerning the Pzr Code safety valves loop seals:					
	• what was their original purpose		X	X	X	
	• why are they continuously drained during operation		X	X	X	X
19	State the purpose of the pressurizer relief tank and the design features which accomplish the purpose.	X	X	X	X	

10.	Describe all alarms, control functions, and interlocks generated by pressurizer pressure which are not controlled by the Pressurizer Master Controller (include setpoints).		X	X	X	X
11.	Describe the protection (signals, setpoints, permissives) associated with Pressurizer pressure (logic not required).		X	X	X	X
12.	For any Pressurizer Pressure Control System input signal failure, determine the effect and evaluate operator action to be taken.			X	X	X
13.	Concerning the Technical Specifications related to the Pressurizer Pressure Control System:					
	• Given the LCO title, state the LCO (including any COLR values) and applicability.			X	X	X
	• For any LCO's that have action required within one hour, state the action.			X	X	X
	• Given a set of parameter values or system conditions, determine if any Tech. Spec. LCO's is (are) not met and any action(s) required within one hour.			X	X	X
	• Given a set of parameters or system conditions and the appropriate Tech Spec, determine the required action(s)			X	X	X
	• Discuss the bases for a given Tech. Spec. LCO or Safety Limit *** SRO ONLY**				X	*

Examination Outline Cross-reference:	Level	RO	SRO
	Tier #	2	
	Group #	1	
	K/A #	012 A3.03	
	Importance Rating	3.4	

(Ability to monitor automatic operation of the RPS, including: Power supply)

Proposed Question: Common 9

Unit 2 is at 100% power.

- All SSPS Channel I bistable status lights simultaneously illuminate.
- Power Range NI Channel N-41 indication is lost.
- Intermediate Range Channel N-35 indication is lost.
- Power Range Channels N-42, N-43, and N-44 indicate 100%.

Which ONE (1) of the following describes the failure that has occurred, and the response of the Reactor Protection System?

A. Loss of DC Bus DCA; Train A SSPS General Warning Alarm is received.

B. Loss of DC Bus DCA; the PCS Power Supply Failure Protection Cabinet 1 & 2 alarms are received.

C. Loss of 120 VAC Bus EKVA; the SSPS Train A General Warning Alarm is received.

D. Loss of 120 VAC Bus EKVA; the PCS Power Supply Failure Protection Cabinet 1 & 2 alarms are received.

Proposed Answer: **C**

Explanation (Optional):

A. **Incorrect.** Indications are that more than just a loss of DC bus has occurred. Indications given are that 1 channel of 120 VAC has been lost. (AP-15, step 11) Effect is correct, as the GW alarm will be received. Plausible because a loss of 48 VDC or 15 VDC power supply WILL cause SSPS General Warning (IC-IPE, pg 39). But this power supply has not been lost.

B. **Incorrect.** Indications are that more than just a loss of DC bus has occurred. Indications given are that 1 channel of 120 VAC has been lost.

Effect is incorrect, as the GW alarm will be received, but only 1 PCS power failure alarm will be received. (ARP for 2AD-2, C7 and D7)

C. **Correct**. The General Warning will occur on Train A due to the loss of 2EKVA. With channel 1 SSPS illuminated, a loss of channel A power supply is indicated.

D. **Incorrect**. The failure is correct but a loss of 1 channel will not result in PCS loss of power on both train A channels. Plausible because EITHER Train A 120 VAC bus will cause a general warning alarm. It is reasonable to misunderstand which failure affects both channels of Train A power and which failure does not.

Technical Reference(s)	OP-MC-IC-IPE p33, 37, 39 Rev 28	(Attach if not previously provided)
	AP/2/A/5500/15 p2 Rev 15	(Including version or revision #)
	OP/2/A/6100/010C/C-7 OP/2/A/6100/010C/D-7 OP/2/A/6100/010C/E-7	

Proposed references to be provided to applicants during examination: None

Learning Objective: IC-IPE #4/5 (As available)

Question Source:	Bank #		
	Modified Bank #		(Note changes or attach parent)
	New	X	

Question History: Last NRC Exam NA

Question Cognitive Level:	Memory or Fundamental Knowledge	
	Comprehension or Analysis	X

10 CFR Part 55 Content:	55.41	6/7
	55.43	

Comments:
KA is matched because item directly evaluates effect on RPS on loss of power supply. Item also discriminates at a higher level because effect on system is

tested

ACTION/EXPECTED RESPONSE	RESPONSE NOT OBTAINED

B. Symptoms

- Status lights lit for a single channel indicating a loss of that channel
- "BATT EVCA UNDERVOLTAGE" Alarm
- "BATT EVCB UNDERVOLTAGE" Alarm
- "BATT EVCC UNDERVOLTAGE" Alarm
- "BATT EVCD UNDERVOLTAGE" Alarm
- "120VAC ESS PWR CHANNEL A TRBL" Alarm
- "120VAC ESS PWR CHANNEL B TRBL" Alarm
- "120VAC ESS PWR CHANNEL C TRBL" Alarm
- "120VAC ESS PWR CHANNEL D TRBL" Alarm
- "125V DC ESS PWR CHANNEL A TROUBLE" Alarm
- "125V DC ESS PWR CHANNEL B TROUBLE" Alarm
- "125V DC ESS PWR CHANNEL C TROUBLE" Alarm
- "125V DC ESS PWR CHANNEL D TROUBLE" Alarm
- "120 VAC REG PWR KRP TRBL" Alarm
- "240/120 VAC AUX CTRL PWR TRBL" Alarm
- "125V DC AUX CTRL PWR TRBL" Alarm
- "BATT CXA UNDERVOLTAGE" Alarm
- "BATT CXB UNDERVOLTAGE" Alarm
- Loss of control power indication for control board components
- "RPI DISPLAY ON EMERG POWER" Alarm
- Loss of power to either DRPI display screen on 2MC-1
- Loss of "OPERATE" light on multiple EMFs
- Data B failure for all control rods.

ACTION/EXPECTED RESPONSE	RESPONSE NOT OBTAINED
11. **Check Vital AC panelboard 2EKVA energized as follows:** __ • Top row of channel status lights - NORMAL.	**Perform the following:** **CAUTION** **Failure to open the Diesel Fuel Oil Transfer pump breaker in the next step may result in an oil spill in the affected D/G room.** __ a. Dispatch operator to 2A D/G room to perform Enclosure 24 (2A D/G Local Actions). b. **IF** letdown isolated, **THEN** have available operator restore letdown **PER** one of the following while continuing with this procedure: __ • **IF** letdown orifice valves have power, **THEN** establish normal letdown **PER** EP/2/A/5000/G-1 (Generic Enclosures), Enclosure 1 (Establishing Normal Letdown). OR __ • **IF** unable to restore normal letdown, **THEN** establish excess letdown **PER** EP/2/A/5000/G-1 (Generic Enclosures), Enclosure 2 (Establishing Excess Letdown). **NOTE** Auto and manual VCT makeup capability is unavailable. __ c. **IF AT ANY TIME** VCT level goes below 16% ("VCT ABNORMAL LEVEL" alarm (2AD-7, D-3) low setpoint), **THEN** align NV pump suction to FWST **PER** Enclosure 23 (VCT Level Control).

2.6.3 Effects of Loss of Power to Reactor Protection

Objective # 6

Upon loss of a Vital 120 VAC Bus, with the Unit at full power, all bistables on the affected channel will de-energize giving Trip signal inputs while the control board bistable lights for the affected channel will be lit. The Trip Logic will change with one Trip signal present such that the 2/4 logic now becomes 1/3 and the 2/3 logic now becomes 1/2. The power loss should not cause a reactor trip since the redundant power supplies will maintain the UV coils energized.

Alarms associated with the Reactor Protection System include:

SSPS Train A or B General Warning due to the loss of power supply EKVA or EKVB for Train A, EKVC or EKVD for Train B.

SSPS Train A & B loss of power.

PCS Protection Channel loss of power for the cabinet which had the loss.

All the trip alert annunciators for the one channel tripped.

Upon loss of a Vital 120 VAC input to an SSPS input channel, only the bistables powered from the input cabinet will de-energize. The NC Pump undervoltage and under frequency bistables from the NC Pump Monitor Panel will de-energize. The turbine trip (Auto Stop Oil pressure and Turbine Stop valve Closed) bistables will also de-energize. Only the trip logic for the above trips will be affected. The NC pump under voltage and under frequency will go to 1/3 while the turbine trip logic will go to 1/2 for Auto Stop Oil and 3/3 for the Stop Valves Closed.

Alarms associated with the Reactor Protection System include:

SSPS Train A & B loss of power.

SSPS Train A or B General Warning due to the loss to channel 1 or 2 for Train A, or loss to channel 3 or 4 for Train B.

Trip alert annunciators for the affected channel.

Refer to OE item 5.5 in Section 5.0 Industry Events

2.6 Power Supplies

The power to the protection and process systems is configured to provide maximum reliability and minimize common mode failures.

2.6.1 Protection Sets

Objective # 5

Protection Set I is supplied from 120 VAC Instrument Power EKVA. This set powers the following:

Process Control Channel I (PCS Cabinet 1)

- NIS Channel I
- SSPS Channel I Input Bay (Train A & B)
  - NC Pump Monitor Panel Channel I
  - Turbine Trip Relays Channel I
  - 48 VDC and 15 VDC Power Supplies (SSPS - Train A)
- SSPS Train A Output Cabinet

Protection Set II is supplied from 120 VAC Instrument Power EKVB. This set powers the following:

Process Control Channel II (PCS Cabinet 2)

- NIS Channel II
- SSPS Channel II Input Bay (Train A & B)
  - NC Pump Monitor Panel Channel II
  - Turbine Trip Relays Channel II
  - 48 VDC and 15 VDC Power Supplies (SSPS - Train A)

Protection Set III is supplied from 120 VAC Instrument Power EKVC. This set powers the following:

Process Control Channel III (PCS Cabinet 3)

- NIS Channel III
- SSPS Channel III Input Bay (Train A & B)
  - NC Pump Monitor Panel Channel III
  - Turbine Trip Relays Channel III
  - 48 VDC and 15 VDC Power Supplies (SSPS - Train B)

Nomenclature: **PCS PWR SUPPLY FAILURE PROT CAB 1** Window: **C7**

Setpoint: Loss of cabinet power supply

> **NOTE:** The plant is still in a protected condition even with the loss of one vital Instrument and Control Bus.

Origin: Undervoltage relay in Protection Cabinet 1

Probable Cause:

- Loss of normal power supply to 120 VAC Instrument and Control Power Panelboard No. 2EKVA
- Power supply failure in the Protection Cabinet

Automatic Action: None

Immediate Action:

1. **IF** failure of 2EKVA, go to AP/2/A/5500/15 (Loss Of Vital Or Aux Control Power).
2. **IF** multiple failures on a channel, go to AP/2/A/5500/15 (Loss Of Vital Or Aux Control Power).
3. **IF** a single failure on a channel, respond per the appropriate Abnormal Procedure.

Supplementary Action:

1. **IF** failure in Protection Cabinet, swap any process-controlling channel to a channel without a Protection Cabinet failure.
2. Refer to Tech Specs.

References:

- Tech Specs
- WCAP-7913 Process Instrumentation
- NSM MG-22126

End of Response

Nomenclature: **PCS PWR SUPPLY FAILURE PROT CAB 2** Window: **D7**

Setpoint: Loss of cabinet power supply

> **NOTE:** The plant is still in a protected condition even with the loss of one vital Instrument and Control Bus.

Origin: Undervoltage relay in Protection Cabinet 2

Probable Cause:
- Loss of normal power supply to 120VAC Instrument and Control Power Panelboard No. 2EKVB
- Power supply failure in the Protection Cabinet

Automatic Action: None

Immediate Action:
1. **IF** failure of 2EKVB, go to AP/2/A/5500/15 (Loss Of Vital Or Aux Control Power).
2. **IF** multiple failures on a channel, go to AP/2/A/5500/15 (Loss Of Vital Or Aux Control Power).
3. **IF** a single failure on a channel, respond per the appropriate Abnormal Procedure.

Supplementary Action:
1. **IF** failure in Protection Cabinet, swap any process-controlling channel to a channel without a Protection Cabinet failure.
2. Refer to Tech Specs.

References:
- Tech Specs
- WCAP - 7913 Process Instrumentation
- NSM MG-22126

End of Response

Nomenclature: **SSPS TRN A GENERAL WARNING** Window: **E1**

Setpoint: Internal sensing of one of 11 faults in Train A

Origin: Solid State Protection System

Probable Cause:
- Loss of either of two 48VDC power supplies
- Loss of either of two 15VDC power supplies
- Any printed circuit card **NOT** properly inserted
- "Input Error Inhibit" switch in the "Inhibit" position
- "Slave Relay Tester Mode Selector" switch in "Test" position
- Multiplexing Inhibited
- Blown Ground Return Fuse
- Reactor Trip Bypass Breaker closed
- Logic "A" switch **NOT** in "Off" position
- Permissives switch **NOT** in "Off" position
- Memories switch **NOT** in "Off" position

Automatic Action: "General Warning" light lit on affected cabinet.

Immediate Action: None

> **CAUTION:** Testing of Train B SSPS while Train A SSPS in alarm will cause Reactor trip.

Supplementary Action:

1. Notify IAE.

> **NOTE:** One 48VDC power supply **AND** one 15VDC power supply are required to maintain SSPS Train A operability.

2. Refer to Tech Specs for action on inoperable train.

References:
- Tech Specs
- Westinghouse Solid State Logic Protection System Description (WCAP-7488-L)
- NSM MG-21214
- NSM MG-22126

End of Response

2.7 System Alarms

Objective # 7

PCS 2/4 Protection Cabinet Doors Open - warns of a possible testing error. The potential for a Trip exists if work is being performed in cabinets at the same time.

SSPS Train A (B) Loss Of Power - Loss of power to any of the 4 input relay cabinets or the output cabinet of the associated SSPS Train.

PCS Power Supply Failure Protection Cabinet 1 (2, 3, 4) - Loss of power to the associated PCS cabinet or failure of a cabinet internal power supply.

Objective # 4

SSPS Train A (B) General Warning - indicates a reduction in protection caused by one of following:

- **Loss of a 48 VDC or 15 VDC power supply**
- **Printed circuit card not properly inserted**
- **Test Switch in Test**
- **Bypass Breaker in the connected position and Closed**
- **Logic ground return fuse blown**

Objective # 8

First Out Alarms - alarm for each Reactor Trip. The first trip will give a Red Alarm light while the subsequent trip signals give White Alarm lights. The first out alarm must NOT be reset until a note has been made of the cause.

CLASSROOM TIME (Hours)

NLO	NLOR	LPRO	LPSO	LOR
	1.5	3.0	3.0	3.0

OBJECTIVES

SEQ	OBJECTIVE	NLO	NLOR	LPRO	LPSO	LOR
1	State the purpose of the Reactor Protection System. ICIPE001		X	X	X	
2	Describe the reactor core parameters and values the system is designed to prevent exceeding. ICIPE002		X	X	X	X
3	Explain how the following Reactor Trip signals will cause the Reactor Trip Breakers and Bypass Breakers to Open (include coils affected): • Automatic signal from SSPS. • Manual Reactor Trip signal. • Manual Safety Injection signal. ICIPE003			X	X	X
4	Explain the significance of the SSPS General Warning Alarm and the conditions which will initiate it. ICIPE004		X	X	X	X
5	State the power source(s) to each Reactor Protection Channel and Train. ICIPE005		X	X	X	
6	Describe the effect on the RPS due to loss of a power source including bistable status, trip logic and any alarms which would indicate the loss of power. ICIPE006			X	X	X
7	Describe how the operator knows when more than one Protection Cabinet Door is Open. ICIPE007			X	X	X

Examination Outline Cross-reference:	Level	RO	SRO
	Tier #	2	
	Group #	1	
	K/A #	012 K6.03	
	Importance Rating	3.3	

(Knowledge of the effect of a loss or malfunction of the following will have on the RPS: Trip Logic Circuits)

Proposed Question: Common 10

Unit 1 is at 100% power.

Pressurizer Pressure Protection Channel III (1NC-PT-5170) fails and is properly removed from service.

Which ONE (1) of the following identifies the Reactor Protection System and ESF actuation logic required, from the remaining in-service channels, to initiate a reactor trip and safety injection on low pressurizer pressure?

	Reactor Trip	Safety Injection
A.	1/2	1/2
B.	1/3	1/3
C	1/3	2/3
D.	2/3	2/3

Proposed Answer: **B**

Explanation (Optional):

A. **Incorrect**. Plausible because P-11 and PZR level trips employ normal 2 of 3 logic.

B. **Correct.** See IC-IPE, p83

C. **Incorrect**. Plausible because applicant may not understand that RPS and ESF functions are placed in trip condition, and also P-11 being 2 of 3 and only affecting ESF function.

D. **Incorrect**. If channels were placed in bypass instead of trip, this would be correct

Technical Reference(s): OP-MC-IC-IPE, p83 Rev 28 (Attach if not previously provided)
OP-MC-ECC-ISE p 21 Rev 30 (Including version or revision #)

Proposed references to be provided to applicants during examination: None

Learning Objective: IC-IPE #10, ECC-ISE #6 (As available)

Question Source: Bank # X
Modified Bank # _____ (Note changes or attach parent)
New _____

Question History: Last NRC Exam Wolf Creek 2007

Question Cognitive Level: Memory or Fundamental Knowledge _____
Comprehension or Analysis X

10 CFR Part 55 Content: 55.41 6, 7
55.43 _____

Comments:
KA matched because item evaluates knowledge of logic operation with 1 channel out of service

7.5 Reactor Trips (3/27/01)

REACTOR TRIP	SETPOINT	LOGIC	PERMISSIVES	BASES
MANUAL	Sw. turned 45°	1/2 sw.		operator judgment
S.R. NI HIGH	10^5 CPS	1/2 ch.	P6, P10	uncontrolled rod withdrawal/ startup accidents
I.R. NI HIGH	amps-25% power	1/2 ch.	P10	uncontrolled rod withdrawal/ startup accidents
P.R. NI LOW	25% power	2/4 ch.	P10	reactivity excursion from low powers
P.R. NI HIGH	109% power	2/4 ch.		reactivity excursion from all powers DNB
P.R. POS RATE	+5%/2 sec	2/4 ch.		DNB (rod ejection)
PZR HIGH PRESS	2385 psig	2/4 ch.		coolant system integrity
PZR LOW PRESS	1945 psig	2/4 ch.	P7	DNB
PZR HIGH LEVEL	92%	2/3 ch.	P7	water through safeties (system integrity)
OTΔT	$\Delta T \geq$ OTΔTsp	2/4/ ch.		DNB
OPΔT	$\Delta T \geq$ OPΔTsp	2/4 ch.		KW/FT
NCP BUS LOW VOLT	74% of normal	2/4 ch.	P7	DNB (anticipatory loss of flow)
NCP BUS LOW FREQ	56 Hz	2/4 ch.	P7	DNB (anticipatory loss of flow)
S/G LO-LO LVL	17%	2/4 in 1/4 s/g		loss of heat sink
1 LOOP LOSS OF FLOW	88%	2/3 in 1/4 loops	P8	DNB
2 LOOP LOSS OF FLOW	88%	2/3 in 2/4 loops	P7	DNB
SAFETY INJECTION	any S/I signal actuated	1/2 S/I trains		trip reactor if trip not generated by trip instrumentation
GENERAL WARNING ALARM	loose card, loss of voltage, train in test, by-pass bkr connected/closed, logic ground return fuse blown	2/2 alarms		loss of protection
TURBINE TRIP	low Auto-stop oil press <45 psig or all 4 stop valves closed	2/3 ASO Press switches 4/4 valves	P8	trip reactor on turbine trip

3.0 SYSTEM OPERATION

3.1 Normal Operation

Objective # 6

Safety Injection Actuation (S_S)

Actuation Signals and logic

Signal	Setpoint	Logic	Interlocks	Reason
Manual		$^1/_2$ pushbuttons		Operator Judgment
Lo-pressurizer pressure	<1845 psig	$^2/_4$ channels	P-11	LOCA Protection
Hi-containment pressure	>1.0 psig	$^2/_3$ channels		LOCA and Steam Break Protection

LOCA protection is provided by the Low Pressurizer Pressure (1845 psig) and the High Containment Pressure (1 psig) Safety Injection Signals.

Steam break protection is provided by the High Containment Pressure (1 psig) Safety Injection Signal.

Objective # 7

Safety Injection Signal (S_S) initiates the following functions:

- Reactor Trip (P4)
- D/G sequencer which in turn starts the following:
  1) **Centrifugal Charging Pumps (NV)**
  2) **Safety Injection Pumps (NI)**
  3) **Residual Heat Removal Pumps (ND)**
  4) **Idle train of Component Cooling Pumps (KC)**
  5) **Idle train of Nuclear Service Water Pumps (RN)**
  6) **Motor Driven Auxiliary Feedwater Pumps (CA)**
  7) Emergency Diesel Generator
  8) Provides start signal to normally running auxiliary building filtered exhaust fans and trips non-filtered exhaust fans

SEQ	OBJECTIVE	NLO	NLOR	LPRO	LPSO	LOR
8	Describe the function of the First-Out annunciator panel. ICIPE008			X	X	
9	Given a Limit and/or Precaution associated with an operating procedure, discuss its basis and applicability. ICIPE009		X	X	X	X
10	List all the Reactor Trip Signals including the setpoints, logic permissives and bases/protection afforded by each. ICIPE010		X	X	X	X
11	List all the protective system permissive ("P" signal) interlocks to include input parameter(s), logic and function. For interlocks which provide Trip block, state the Trips affected and whether Auto or Manual block. ICIPE011			X	X	X
12	List all the protection system control ("C" signal) interlocks including logic and functions. ICIPE012			X	X	X
13	Briefly describe the incident that occurred at Salem Nuclear Plant and how this event affected McGuire Reactor Trip Breaker operation. ICIPE013			X	X	X

CLASSROOM TIME (Hours)

NLO	NLOR	LPRO	LPSO	LOR
2.5	1.5	1.5	1.5	1.5

OBJECTIVES

	OBJECTIVE	NLO	NLOR	LPRO	LPSO	LOR
1	State the purpose of the Engineered Safeguards System.	X	X	X	X	
2	Explain the need and reasoning behind the redundancy requirements for two trains of safety related systems.	X	X	X	X	
3	State how the operator would be aware if more than one protection cabinet door was opened simultaneously.			X	X	X
4	Define the following terms: S_s, S_t, S_P, S_H	X	X	X	X	
5	List the conditions that will initiate the following: • Safety Injection (S_s) • Phase "A" Isolation (S_t) • Containment Spray/Phase "B" Isolation (S_P) • Containment Ventilation Isolation (S_H) • Main Steam Isolation (MSI) • Main Feedwater Isolation (FWI) • VE (Annulus Ventilation) System Start • H_2 Skimmer and Air Return Fan Start (VX)	X	X			
6	List all Safety Injection (S_s) actuation signals, setpoints, logic, and the type of accident each signal provides protection for.	X	X	X	X	X
7	List the pumps that automatically start following a safety injection actuation.	X	X	X	X	X
8	State which Safety Injection (S_s) signal can be blocked.	X	X	X	X	X
9	Explain the reason for blocking a Safety Injection (S_s) signal.	X	X	X	X	X
10	List the interlock and parameter setpoint that allows blocking Safety Injection (S_s).	X	X	X	X	X
11	Describe the operator action needed to block Safety Injection.			X	X	X
12	List the conditions that allow RESET of Safety Injection.			X	X	X

Examination Outline Cross-reference:	Level	RO	SRO
	Tier #	2	
	Group #	1	
	K/A #	012 K4.08	
	Importance Rating	3.1	

(Knowledge of ESFAS design feature(s) and/or interlock(s) which provide for the following: Redundancy)

Proposed Question: Common 11

Which ONE (1) of the following automatic actuations requires both a Containment Pressure Control System signal and its bistable in the Solid State Protection System (SSPS) output bay to energize in order to occur?

A. Startup of the Containment Spray System.

B. Startup of the Annulus Ventilation System.

C. Startup of the Hydrogen Skimmer Fans.

D. Startup of the Containment Air Return Fans.

Proposed Answer: A

Explanation (Optional):

A. **Correct**. Section 3.1 of OP-MC-ECC-ISE (p27) states that the automatic actuation of Containment Spray is one of the *only functions* that requires the bistable to energize to perform its required action. It is not desirable to have a loss of power actuate containment spray, since the consequences of an inadvertent actuation of containment spray could be serious.

B. **Incorrect.** Does not require CPCS signal. Actuates on Hi-Hi Containment Pressure, however, bistable is de-energize to function. (OP-MC-ECC-ISE p29)

C. **Incorrect.** Requires CPCS signal. Actuates on Hi-Hi Containment Pressure, however, bistable is de-energize to function. (OP-MC-ECC-ISE p29)

D. **Incorrect.** Requires CPCS signal. Actuates on Hi-Hi Containment Pressure, however, bistable is de-energize to function. (OP-MC-ECC-ISE p29)

Technical OP-MC-ECC-ISE p27,29 (Attach if not previously

Reference(s) _____ provided)
_____ (Including version or revision #)

Proposed references to be provided to applicants during examination: None

Learning Objective: ECC-ISE #5 (As available)

Question Source: Bank # _____
Modified Bank # _____ (Note changes or attach parent)
New X

Question History: Last NRC Exam _____

Question Cognitive Level: Memory or Fundamental Knowledge X
Comprehension or Analysis _____

10 CFR Part 55 Content: 55.41 7
55.43 _____

Comments:
KA is matched because channel redundancy is related to both the function provided by the channel and the method of actuation. Containment Spray is the ONLY ESF actuation that requires redundant channels to energize in order for actuation to occur

Phase "A" Containment Isolation (S_t) is actuated by a Safety Injection (S_S) or Manually ($^1/_2$ pushbuttons). Phase "A" isolates all non-essential containment penetrations. A Manual Phase "A" (S_t) actuation will also actuate S_H (Containment Ventilation Isolation). The initiate pushbutton for Phase "A" (S_t) is also the initiate pushbutton for Containment Ventilation Isolation (S_H) but they have separate reset pushbuttons. Phase "A" can be reset with S_S (Safety Injection) signal present (not reset), via Control Board Pushbuttons.

Objective # 13

Containment Spray Actuation (NS) is actuated by:

Hi Hi Containment Pressure	**>3.0 psig on $^2/_4$ channels plus CPCS**
Manually	**$^1/_2$ pushbuttons plus CPCS**

NOTE: Initiate pushbuttons for "Phase B and Containment Spray" are the same, however "Reset" pushbuttons are separate.

The automatic actuation of Containment Spray is one of the only functions that requires the bistable to energize to perform its required action. It is not desirable to have a loss of power actuate containment spray, since the consequences of an inadvertent actuation of containment spray could be serious. Note that this function also has the inoperable channel placed in bypass rather than trip to decrease the probability of an inadvertent actuation.

The Containment Pressure Control System (CPCS) requires a 0.35 psig CPCS signal for permissive. NS can be manually actuated with this permissive. The signal can be manually reset by (2) separate train related pushbuttons.

When containment pressure decreases to < 0.35 psig, CPCS stops the NS Pumps and closes the NS pump discharge containment isolation valves. If the NS signal has not been reset and containment pressure increases to ≥ 0.35 psig, CPCS opens the NS valves. If pressure continues to increase, at ≥ 0.8 psig, pumps restart. Having the pump restart delayed reduces starting duty cycles.

If the NS signal has been reset and containment pressure is < 0.35 psig, NS will secure as stated above. NS will not restart automatically until containment pressure increases to > 3 psig again.

The NS signal can be reset with containment pressure > 3 psig. This would be done in order to transfer NS pump suction to the containment recirc sump in accordance with EP/1(2)/A/5000/ES-1.3 "Transfer to Cold Leg Recirc".

Objective # 13

Phase "B" Containment Isolation is actuated by:

Hi Hi Containment Pressure	**> 3.0 psig on $^2/_4$ channels**
Manually	**$^1/_2$ pushbuttons**

Phase B actuation secures Component Cooling Water (KC) to the Reactor Coolant pumps, Nuclear Service Water (RN) to the Reactor Coolant Pump Motor Coolers, Containment Ventilation Cooling Water (RV) and Instrument Air (VI) to the containment.

Phase "B" can be reset with signal still present, once resets are pushed, we regain control of valves that close on the Phase "B" signal.

Containment Ventilation Isolation (S_H) is initiated by any of the following:

- **Safety Injection (S_S)**
- **Manual Phase "A" (S_t)**
- **Manual NS/Phase "B"**
- **Trip 2 alarm on EMF-38, 39, or 40**

Containment Ventilation Isolation (S_H) signal secures VQ and VP.

To "Reset" Containment Ventilation Isolation following a Safety Injection, Manual Phase "A", or Manual Phase "B", the Containment Ventilation (S_H) "Reset" Pushbuttons must be depressed (can reset without resetting the initiating signal).

To "Reset" Containment Ventilation following an EMF 38, 39, 40 Trip II, the EMF must be reset, then the Containment Ventilation "Reset Pushbuttons must be depressed.

NOTE: **Resetting the S_H signal will allow manual control of VQ valves. VQ valves do not have an auto function.**

Annulus Ventilation System (VE) start maintains negative pressure in annulus. It is actuated automatically by a Hi Hi Containment pressure signal or manually by either depressing Manual "NS/Phase B" Pushbutton or placing VE (Annulus Ventilation) to "ON".

To reset the start signal we must reset the Phase "B" isolation, then, place VE (Annulus Ventilation) fan switch to "Reset" and place back in "auto".

H_2 Skimmer and Air Return Fan (VX) starts on a Hi Hi Containment Pressure (S_p) with CPCS or Manually by NS/Phase B pushbutton and CPCS after a 10 minute time delay.

CLASSROOM TIME (Hours)

NLO	NLOR	LPRO	LPSO	LOR
2.5	1.5	1.5	1.5	1.5

OBJECTIVES

	OBJECTIVE	NLO	NLOR	LPRO	LPSO	LOR
1	State the purpose of the Engineered Safeguards System.	X	X	X	X	
2	Explain the need and reasoning behind the redundancy requirements for two trains of safety related systems.	X	X	X	X	
3	State how the operator would be aware if more than one protection cabinet door was opened simultaneously.			X	X	X
4	Define the following terms: S_S, S_t, S_P, S_H	X	X	X	X	
5	List the conditions that will initiate the following: • Safety Injection (S_S) • Phase "A" Isolation (S_t) • Containment Spray/Phase "B" Isolation (S_P) • Containment Ventilation Isolation (S_H) • Main Steam Isolation (MSI) • Main Feedwater Isolation (FWI) • VE (Annulus Ventilation) System Start • H_2 Skimmer and Air Return Fan Start (VX)	X	X			
6	List all Safety Injection (S_S) actuation signals, setpoints, logic, and the type of accident each signal provides protection for.	X	X	X	X	X
7	List the pumps that automatically start following a safety injection actuation.	X	X	X	X	X
8	State which Safety Injection (S_S) signal can be blocked.	X	X	X	X	X
9	Explain the reason for blocking a Safety Injection (S_S) signal.	X	X	X	X	X
10	List the interlock and parameter setpoint that allows blocking Safety Injection (S_S).	X	X	X	X	X
11	Describe the operator action needed to block Safety Injection.			X	X	X
12	List the conditions that allow RESET of Safety Injection.			X	X	X

Examination Outline Cross-reference:	Level	RO	SRO
	Tier #	2	
	Group #	1	
	K/A #	022 A2.05	
	Importance Rating	3.1	

Ability to (a) predict the impacts of the following malfunctions or operations on the CCS; and (b) based on those predictions, use procedures to correct, control, or mitigate the consequences of those malfunctions or operations: Major leak in CCS

Proposed Question: Common 12

With Unit 1 in Mode 1 the following sequence of events occur:

0750 200 gpm RV System leak occurs inside Containment
0751 MCB Annunciator 1AD-13/C-5, "Containment Floor and Equipment Sump A High Level," – In Alarm.
MCB Annunciator 1AD-13/E-5, "Containment Floor and Equipment Sump B High Level," – In Alarm.
0755 Operators manually close all RV Containment Isolation Valves in order to stop the leak.
0825 Operators have observed 1°F increase in both upper and lower Containment temperature since the RV System was isolated.

- Upper level of Containment was initially at 88°F.
- Lower level of Containment was initially at 104°F.
- Assume that the RV System remains isolated and Containment heat-up rate remains constant.

Which ONE (1) of the following identifies the approximate time before a Technical Specification Containment Temperature limit will be exceeded, and the procedure that must be used to restore Containment sump level?

A. 4 hours, OP/1/A/6500/001, "Liquid Waste System."

B. 4 hours, AP/1/A/5500/44, "Plant Flooding."

C. 6 hours, OP/1/A/6500/001, "Liquid Waste System."

D. 6 hours, AP/1/A/5500/44, "Plant Flooding."

Proposed Answer: **C**

Explanation (Optional):

A. **Incorrect.** 4 hours would result in an increase in Containment Upper and Lower levels of 8°F. This would place the Containment Upper Level at 96°F (4°F < TS Limit of 100°F) and the Containment Lower Level at 112°F (8°F < TS Limit).

B. **Incorrect.** 4 hours would result in an increase in Containment Upper and Lower levels of 8°F. This would place the Containment Upper Level at 96°F (4°F < TS Limit of 100°F) and the Containment Lower Level at 112°F (8°F < TS Limit). Additionally, AP44 is written to handle flooding in the Turbine, Auxiliary and Service Buildings, NOT Containment.

C. **Correct.** 6 hours would result in an increase in Containment Upper and Lower levels of 12°F. This would place the Containment Upper Level at 100°F (The TS Limit) and the Containment Lower Level at 116°F (4°F < TS Limit). Additionally, with the stated MCB Annunciators in alarm the operator will be directed to monitor the removal of the sump water to the FDT via the CFE Sump Pumps in accordance with the Liquid Waste Normal Operating procedure (OP/1/A/6500/001).

D. **Incorrect**. AP44 is written to handle flooding in the Turbine, Auxiliary and Service Buildings, NOT Containment.

Technical Reference(s)	TS 3.6.5 Amendment 184/166	(Attach if not previously provided)
	AP/1/A/5500/44 Rev 7 Purpose Statement	(Including version or revision #)
	ARP 1AD-13/C-5 Rev 71	
	OP/1/A/6500/001 Rev 70	
	OP-MC-WE-WE, p25 Rev 22	

Proposed references to be provided to applicants during examination: None

Learning Objective: WE-WL #5 (As available)

Question Source: Bank # _____
Modified Bank # _____ (Note changes or attach parent)
New X

Question History: Last NRC Exam _____

Question Cognitive Level: Memory or Fundamental Knowledge

	Comprehension or Analysis	X

10 CFR Part 55 Content:	55.41	5,10
	55.43	

Comments:

KA is matched because the impact tested is time to exceed a TS limit, and using procedures is evaluated by which procedure will be applicable for the condition

Level:

Comprehension or Analysis	X

10 CFR Part 55 Content:

55.41 5,10

55.43

Comments:

3.6 CONTAINMENT SYSTEMS

3.6.5 Containment Air Temperature

LCO 3.6.5 Containment average air temperature shall be:

a. ≥ 75°F and ≤ 100°F for the containment upper compartment, and

b. ≥ 100°F and ≤ 120°F for the containment lower compartment.

----------NOTES----------

1. The minimum containment average air temperature in MODES 2, 3, and 4 may be reduced to 60°F.

2. Containment lower compartment temperature may be between 120°F and 125°F for up to 90 cumulative days per calendar year provided lower compartment temperature average over the previous 365 days is less than 120°F. Within this 90 cumulative day period, lower compartment temperature may be between 125°F and 135°F for 72 cumulative hours.

APPLICABILITY: MODES 1, 2, 3, and 4.

ACTIONS

CONDITION	REQUIRED ACTION	COMPLETION TIME
A. Containment average air temperature not within limits.	A.1 Restore containment average air temperature to within limits.	8 hours
B. Required Action and associated Completion Time not met.	B.1 Be in MODE 3. AND B.2 Be in MODE 5.	6 hours 36 hours

SURVEILLANCE REQUIREMENTS

SURVEILLANCE		FREQUENCY
SR 3.6.5.1	Verify containment upper compartment average air temperature is within limits.	24 hours
SR 3.6.5.2	Verify containment lower compartment average air temperature is within limits.	24 hours

A. Purpose

This procedure provides guidance to mitigate the effects of flooding in the Auxiliary, Turbine, and Service Buildings.

Nomenclature:	CONTAINMENT FLOOR & EQUIP SUMP A HI LVL	Window:	C5

Setpoint: 12 inches

Origin: 1WLLT-5250 (Monitoring Containment Floor and Equip Sump A)

Probable Cause: Leak in sump area

Automatic Action: None

Immediate Action:

1. Refer to OP/1/A/6500/001 (Liquid Waste System) to pump down sump.
2. Monitor level **AND** ensure pump auto stops at 7 inches decreasing level.

Supplementary Action:

1. **IF** 1WLLT-5250 (Monitoring Containment Floor and Equip Sump A) inoperable, refer to Tech Spec for leak detection
2. **IF** leakage is excessive, perform PT/1/A/4150/001 B (Reactor Coolant Leakage Calculation).
3. **IF** leakage calculation performed, refer to Tech Spec for limiting conditions for operation on unidentified leakage.
4. Notify Radwaste Chemistry Group.
5. **IF** 1KF-122 open **AND** Refueling Cavity level going down, refer to AP/1/A/5500/40 (Loss of Refueling Cavity Level).

References:

- Equipment Database
- MCEE-160-01.12
- MCEE-160-01.14
- Tech Spec

End Of Response

Unit 1

1. Limits and Precautions

1.1 Ensure sufficient volume available before transferring any tank contents to another tank.

1.2 Transfer and handling of all waste shall be coordinated with Radwaste Chemistry.

1.3 Pumping Containment Floor and Equipment Sump for greater than 30 minutes or increasing level for greater than 30 minutes, makes the Containment Floor and Equipment Sump Level Monitoring System inoperable. {PIP M-06-00204}

2. Initial Conditions

None

3. Procedure

☐ 3.1 Evaluate all outstanding R&Rs that may impact performance of this procedure.

3.2 Perform the following sections, as applicable:

☐ Section 3.3, Pumping Containment Floor and Equipment Sump(s)
☐ Section 3.4, Raising B Containment Floor and Equipment Sump Level
☐ Section 3.5, Pumping Incore Instrument Room Sump

3.3 Pumping Containment Floor and Equipment Sump(s)

_____ SRO 3.3.1 Declare Containment Floor and Equipment Sump Level Monitoring System inoperable.

OR

_____ SRO 3.3.2 Ensure Containment Floor and Equipment Sump pump-out duration is less than 30 minutes.

☐ 3.3.3 Check CFAE Sump(s) to be pumped greater than 8 inches.

NOTE: CFAE Sump Pumps should auto secure at 7 inches to prevent pump damage due to loss of suction.

3.3.4 Record Containment Floor and Equipment Sump level(s) to be pumped.

☐ A CFAE Level - 7 _____ inches
☐ B CFAE Level - 7 _____ inches

☐ 3.3.5 Estimate and record gallons to be pumped (total inches x 36 gallons per inch): _____ gallons

_____ 3.3.6 Notify Radwaste Chemistry of estimated gallons of water to be pumped from Floor and Equipment Sump(s).

_____ _____/_____
Person Notified Date Time

_____ 3.3.7 Open 1WL-65B (RB Sump Pumps Disch Cont Outside Isol).

3.3.8 Start desired CFAE pump(s):

_____ • 1A1 CFAE Pump
_____ • 1A2 CFAE Pump
_____ • 1B1 CFAE Pump
_____ • 1B2 CFAE Pump

NOTE: CFAE Sump Pumps should auto secure at 7 inches to prevent pump damage due to loss of suction.

_____ 3.3.9 **WHEN** desired to secure pumping CFAE, perform the following:

3.3.9.1 Ensure off:

_____ • 1A1 CFAE Pump
_____ • 1A2 CFAE Pump
_____ • 1B1 CFAE Pump
_____ • 1B2 CFAE Pump

_____ 3.3.9.2 Close 1WL-65B (RB Sump Pumps Disch Cont Outside Isol).

_____ SRO 3.3.10 Evaluate Containment Floor and Equipment Sump Level Monitoring System operability.

3.3.11 Record Containment Floor and Equipment Sump levels pumped:

☐ A CFAE Level _____ inches
☐ B CFAE Level _____ inches

☐ 3.3.12 Multiply total level decrease (inches) by 36 (gallons per inch) and record gallons discharged in Autolog.

3.4 Raising B Containment Floor and Equipment Sump Level

_____ SRO 3.4.1 Declare Containment Floor and Equipment Sump Level Monitoring System inoperable.

OR

_____ SRO 3.4.2 Ensure Containment Floor and Equipment Sump level increase is less than 30 minutes.

_____ 3.4.3 Dispatch Operator to Upper Containment to operate 1YM-233 (1A Cont Decon Sink YM Supply Isol) and 1YM-234 (1B Cont Decon Sink YM Supply Isol)

3.4.4 Perform the following:

☐ Establish communication with the Control Room

☐ Have Operator monitor B Containment Floor and Equipment Sump level

_____ 3.4.5 Open 1YM-115B (Unit 1 YM Supply To Rx Bldg Cont Outside Isol).

NOTE: **WHEN** B Floor and Equipment Sump level is raised, the following alarms may be received:
- M1P1068 (U1 Cont Floor & Equip Sump Level Rate)
- M1P1069 (U1 Total Cont Floor & Equip Sump Level Rate)
- M1L4554 (U1 Unidentified Leakage > 1 gpm in Cont)

- It may take 10 - 15 minutes for a level increase to be seen after opening YM supply valves at sink.

3.4.6 Perform the following for the desired sink(s):

_____ • Open 1YM-233 (1A Cont Decon Sink YM Supply Isol) and throttle sink valves so that sink does **NOT** overflow.

_____ • Open 1YM-234 (1B Cont Decon Sink YM Supply Isol) and throttle sink valves so that sink does **NOT** overflow.

NOTE: When the YM valves in the following steps are closed, level in the CF&E sump may continue to increase while the piping drains.

_____ 3.4.7 **WHEN** B Containment Floor and Equipment is at desired level, ensure the following valves closed:

_____ • 1YM-233 (1A Cont Decon Sink YM Supply Isol)

_____ • Valves in Decon Sink A

_____ • 1YM-234 (1B Cont Decon Sink YM Supply Isol)

_____ • Valves in Decon Sink B

_____ 3.4.8 Close 1YM-115B (Unit 1 YM Supply To Rx Bldg Cont Outside Isol).

_____ 3.4.9 Evaluate Containment Floor and Equipment Sump Level Monitoring System operability.
SRO

3.5 Pumping Incore Instrument Room Sump

_____ 3.5.1 Open 1WL-65B (RB Sump Pumps Disch Cont Outside Isol).

☐ 3.5.2 Start 1A Incore Instrument Room Sump Pump.

_____ 3.5.3 **WHEN** 1A Incore Instrument Room Sump Pump stops, close 1WL-65B (RB Sump Pumps Disch Cont Outside Isol)

☐ 3.5.4 Record Incore Instrument Room Sump Pump stop time in Autolog.

_____ 3.5.5 **IF** Incore Instrument Room Sump has been pumped within the past month **AND** it is desired to calculate the Incore Instrument Room Sump input rate, perform the following:

☐ 3.5.5.1 Record previous Incore Instrument Room Sump Pump stop Date_____ and Time _____.

☐ 3.5.5.2 Calculate the time difference between Steps 3.5.4 and 3.5.5.1 in minutes_____.

☐ 3.5.5.3 Divide the volume pumped down (125 gallons) by the time recorded in Step 3.5.5.2_____gpm.

☐ 3.5.5.4 Record the rate of input to Incore Instrument Room Sump in Autolog.

End of Enclosure

2.8 Laundry and Hot Shower Tank Subsystem

Refer to Drawing 7.8, Laundry and Hot Shower Subsystem. The LHST collects soapy liquids that are potentially radioactive and are not recyclable. The sources of input to the LHST are:

- Decontamination Showers
- Decontamination Sink
- Some Auxiliary Building service sinks above the 716' level
- Laundry effluent (LHST Sump - 1202 Bldg)
- Laundry Sump (U2 Equipment Staging Bldg)

The LHST contents' radioactivity should be below the level required for processing to reduce radioactivity. To reduce the environmental effects of discharging the fluid, it is processed through the LHST Post Strainer (40 mesh) and the LHST Primary Filters (25 micron). The LHST is normally pumped to WMT 'A' or 'B'.

2.9 Waste Tanks No Longer Used

- Mixing and Settling Tank
- Recycle Monitor Tanks
- Chemical Drain Tank

2.10 Containment Floor and Equipment Sumps

Objective #5

Refer to Drawing 7.9, Containment Floor and Equipment Sumps. There are two pumps in Sump 'A' and two pumps in Sump 'B', and one in the Incore Instr. (ENA) Room. The Containment Floor and Equipment (CF&E) Sumps have level indication in the control room and Hi Lvl annunciators on AD13. The ENA Room has a Hi Lvl annunciator on AD13 and a Hi Level OAC alarm. Upon high alarm, the sumps are normally pumped to the FDT.

Any of the sump pumps running will automatically stop if a Trip 2 comes in on EMF-38, 39, or 40 (note that a Trip 2 will also bring in an S_H, but it is the Trip 2 itself that trips the pumps), or if WL-64A or 65B closes (note that WL-64A/65B close on an S_T) . The CF&E Sump Pumps (65 gpm) automatically stop at 7 inches of level and the ENA Sump Pump automatically stops at 3 inches.

2.11 Auxiliary FDT and Auxiliary WEFT

Refer to Drawing 7.10, Aux FDT and Aux WEFT. The contents of the FDT can be sent to the Aux FDT or Aux WEFT for chemical treatment or to allow for extra waste storage. The Aux FDT or Aux WEFT contents can be sent to the WMT's via filters and demin.

CLASSROOM TIME (Hours)

NLO	NLOR	LPRO	LPSO	LOR
1	1	1.5	1.5	1

OBJECTIVES

	OBJECTIVE	NLO	NLOR	LPRO	LPSO	LOR
1	State the purpose of the Liquid Waste (WL) System. WEWL001	X	X	X	X	
2	Discuss the purpose/operation of the following: • VUCDT • VUCDT Pump • VUCDT Pump Discharge Pressure Gage • WL-320 (VUCDT EMF Outlet) • WL-324 (VUCDT EMF Bypass) • WL-359 (VUCDT Pump Recirc.) WEWL002	X	X	X	X	
3	Describe the two possible VUCDT discharge flow paths. WEWL003	X	X	X	X	
4	List the control room indication available to indicate a high level in the VUCDT. WEWL004			X	X	X
5	Describe the Containment Floor and Equipment Sump operations. WEWL005	X	X	X	X	X
6	Describe the purpose/operation of the NCDT WEWL006	X	X	X	X	
7	Given a Limit and/or Precaution associated with an operating procedure that Operations personnel are responsible for; discuss its basis and applicability. WEWL007	X	X	X	X	X
8	Evaluate plant parameters to determine any abnormal system condition that may exist. WEWL008			X	X	X
9	Describe the purpose and contents of the NPDES Permit. WEWL009				X	X

Examination Outline Cross-reference:	Level	RO	SRO
	Tier #	2	
	Group #	1	
	K/A #	025 K6.01	
	Importance Rating	3.4	

(Knowledge of the effect of a loss or malfunction of the following will have on the ice condenser system: Upper and lower doors of the ice condenser)

Proposed Question: Common 13

The following conditions exist on Unit 1:

- Plant is starting up following a Refueling Outage.
- An instantaneous double-ended shear of NC Loop C (Large Break LOCA) occurs.
- Several Ice Condenser Upper and Lower doors fail to open.

Which ONE (1) of the following identifies a consequence of the failed doors?

A. The Hydrogen Skimmer and Containment Air Return (VX) System automatic actuation is delayed.

B. Water that accumulates in the Containment Sump will have a substantially lower Boron concentration.

C. Less water will accumulate in the Containment Sump within the first 15 minutes of the event.

D. FWST inventory will decrease at a faster rate.

Proposed Answer: **C**

Explanation (Optional):

A. Incorrect. According to Section 3.1 of OP-MC-ECC-ISE, VX automatic actuation will occur when Containment pressure reaches 3 psig (instantaneously) and after a 10 minute time delay. In actuality, the failed doors will not have an affect on this action. However, the failed doors will require a longer time for the Containment Upper Level pressure to equalize with Lower Containment Pressure. If the operator mistakenly believes that the VX System starts on Containment Upper Level Pressure, which will be lower for a longer period of time, the distractor is plausible.

B. Incorrect. The water that is accumulating in the Containment sump is from the NC System and the FWST. Both of these sources use borated water, and the NCS Boron concentration is at the highest that it will ever be (BOL) during the operating cycle. Had the Ice Condenser operated as designed, water with 2000 ppm would have been added to the Containment Sump. However, the water from the NC System in the sump is close to that concentration, and the water from the RWST is probably higher (TS 3.5.4).

C. Correct. With the doors failing to operate as designed, less ice will melt resulting in less accumulating water in the Containment Sump. Section 3.2 of OP-MC-CNT-NF states that the ice melt provides water for the containment sump inventory available for recirculation through the core. If the system does NOT work as designed there will be less accumulated water in the sump.

D. Incorrect. Containment Pressure will rise higher than predicted due to the failure of the Ice Condenser to operate as designed (Section 3.2 of OP-MC-CNT-NF). With the Containment Pressure higher, inventory from the ECCS pumps flowing into the Containment via the NC System, and the NS pumps directly will occur at a slower rate due to increased ΔP. If anything, FWST inventory depletion will take longer.

Technical Reference(s)	OP-MC-ECC-ISE p29, Rev 30	(Attach if not previously provided)
	OP-MC-CNT-NF P67 Rev 29	(Including version or revision #)
	Unit 1 COLR, p26	

Proposed references to be provided to applicants during examination: None

Learning Objective: CNT-NF #19, 20 (As available)

Question Source:	Bank #		
	Modified Bank #	1009	(Note changes or attach parent)
	New		

Question History: Last NRC Exam NA

Question Cognitive Level:	Memory or Fundamental Knowledge	
	Comprehension or Analysis	X

10 CFR Part 55 Content:	55.41	6, 7, 8
	55.43	

Comments:

KA is matched because the effect evaluated is directly related to failure of Ice Condenser doors

Question 1009 CNTNF046 CNTNF046

1 Pt Which of the following is the major effect of a failure of the ice condenser doors to open on a LOCA?

A. Design basis containment pressure would be exceeded.

B. Increased corrosion of components in containment due to lower pH.

C. Would not be able to remove iodine from the containment atmosphere.

D. Insufficient inventory to maintain the core covered during a LOCA.

Answer 1009

A

CNT-NF, section 3

Objective #19, 20

Operation of the ice condenser is critical to the containment response following a HELBIC. The ice condenser and containment spray work together to maintain containment pressure below 15 psig. If for some reason one or more of the ice condenser doors failed to open, containment pressure could exceed the design basis pressure. Excessive containment leakage or in worst case scenario, a breach of containment, could result in excessive dose to plant personnel and the general population near the plant. In addition, the ice melt provides borated water for the containment sump. Following a LOCA, the melted ice provides 2000 ppm borated water (Tech Spec minimum of 1800 ppm.) to aid in the containment sump inventory available for recirculation through the core.

4.0 TECHNICAL SPECIFICATIONS

Objective # 21

4.1 SLC 16.6.3, Inlet Door Position Monitoring System

4.2 SLC 16.8.1, Containment Penetration Conductor Overcurrent Devices

4.3 Tech. Spec. 3.6.12, Ice Bed

4.4 Tech. Spec. 3.6.13, Ice Condenser Doors

4.5 Tech Spec 3.6.15, Containment Recirculation Drains

Objective # 13

Phase "B" Containment Isolation is actuated by:

Hi Hi Containment Pressure	**> 3.0 psig on $^2/_4$ channels**
Manually	**$^1/_2$ pushbuttons**

Phase B actuation secures Component Cooling Water (KC) to the Reactor Coolant pumps, Nuclear Service Water (RN) to the Reactor Coolant Pump Motor Coolers, Containment Ventilation Cooling Water (RV) and Instrument Air (VI) to the containment.

Phase "B" can be reset with signal still present, once resets are pushed, we regain control of valves that close on the Phase "B" signal.

Containment Ventilation Isolation (S_H) is initiated by any of the following:

- **Safety Injection (S_S)**
- **Manual Phase "A" (S_t)**
- **Manual NS/Phase "B"**
- **Trip 2 alarm on EMF-38, 39, or 40**

Containment Ventilation Isolation (S_H) signal secures VQ and VP.

To "Reset" Containment Ventilation Isolation following a Safety Injection, Manual Phase "A", or Manual Phase "B", the Containment Ventilation (S_H) "Reset" Pushbuttons must be depressed (can reset without resetting the initiating signal).

To "Reset" Containment Ventilation following an EMF 38, 39, 40 Trip II, the EMF must be reset, then the Containment Ventilation "Reset Pushbuttons must be depressed.

NOTE: Resetting the S_H signal will allow manual control of VQ valves. VQ valves do not have an auto function.

Annulus Ventilation System (VE) start maintains negative pressure in annulus. It is actuated automatically by a Hi Hi Containment pressure signal or manually by either depressing Manual "NS/Phase B" Pushbutton or placing VE (Annulus Ventilation) to "ON".

To reset the start signal we must reset the Phase "B" isolation, then, place VE (Annulus Ventilation) fan switch to "Reset" and place back in "auto".

H_2 Skimmer and Air Return Fan (VX) starts on a Hi Hi Containment Pressure (S_p) with CPCS or Manually by NS/Phase B pushbutton and CPCS after a 10 minute time delay.

McGuire 1 Cycle 19 Core Operating Limits Report

2.11 RCS Pressure, Temperature and Flow Limits for DNB (TS 3.4.1)

2.11.1 The RCS pressure, temperature and flow limits for DNB are shown in Table 4.

2.12 Accumulators (TS 3.5.1)

2.12.1 Boron concentration limits during modes 1 and 2, and mode 3 with RCS pressure >1000 psi:

Parameter	Limit
Cold Leg Accumulator minimum boron concentration.	2,475 ppm
Cold Leg Accumulator maximum boron concentration.	2,875 ppm

2.13 Refueling Water Storage Tank - RWST (TS 3.5.4)

2.13.1 Boron concentration limits during modes 1, 2, 3, and 4:

Parameter	Limit
Refueling Water Storage Tank minimum boron concentration.	2,675 ppm
Refueling Water Storage Tank maximum boron concentration.	2,875 ppm

	OBJECTIVE	NLO	NLOR	LPRO	LPSO	LOR
11	Describe how the ice condenser temperature is maintained during normal operation.	X	X	X	X	X
12	State the purpose of the following NF Ice Making System components: • Glycol Recirc Pumps • "Run-Off-Fill" switches • Ice Making Solution Mixing Tank.	X	X	X	X	
13	Discuss the basic flowpath of ice from the ice storage bin to the ice baskets in the ice condenser.	X	X	X	X	
14	Concerning the ice condenser chart recorder: • State the purpose • List the information that can be accessed • Describe the modes of operation.			X	X	X
15	Given a limit and/or precaution associated with an NF System Operating Procedure, discuss its basis and applicability.	X	X	X	X	X
16	State the problems which will occur as a result of operating with elevated Ice condenser temperature.	X	X	X	X	X
17	State the purpose of iodine removal from containment following a LOCA..	X	X	X	X	X
18	Explain how iodine removal from containment atmosphere is accomplished and the effect of (sodium tetraborate) $Na_2B_4O_7$ on the removal process.	X	X	X	X	X
19	Describe how a failure of the ice condenser doors to open on a LOCA will effect containment sump level.	X	X	X	X	X
20	Describe how a failure of the ice condenser doors to open on a HELBIC will effect peak containment pressure.	X	X	X	X	X

Examination Outline Cross-reference:	Level	RO	SRO
	Tier #	2	
	Group #	1	
	K/A #	025 K5.01	
	Importance Rating	3.0	

(Knowledge of operational implications of the following concepts as they apply to the ice condenser system: Relationships between pressure and temperature)

Proposed Question: Common 14

With Unit 1 at power the following Ice Condenser equipment status exists:

- All NF Air Handling Units - On
- 1A and 1B NF Glycol Pumps - On
- 1A, 1B, 1C and 1G NF Chillers - On
- Ice Machines/Ice Loading Equipment - Off

Ice Condenser Aggregate Temperature is being maintained at 15°F.

Subsequently, one Chiller and one Glycol Pump are removed from service, and Ice Condenser Aggregate Temperature stabilizes at 25°F.

Which ONE (1) of the following describes a consequence of this event?

A. Sublimation of the ice will occur at a higher rate.

B. Containment Temperature will approach a Technical Specification limit.

C. Aggravation of the NF System Freeze/Thaw Cycle will be minimized.

D. The Technical Specification limit for Ice bed temperature will be exceeded.

Proposed Answer: A

Explanation (Optional):

A. Correct. Securing a glycol pump and a Chiller will cause Ice Condenser Temperature to elevate. OP-MC-CNT-NF (p63, section 3.1.2) states that operating with elevated ice condenser temperatures during normal operation increases sublimation of the ice.

B. Incorrect. This action will adjust the Temperature of the Ice Condenser, not the Containment. The Ice Condenser is designed to function as a Thermal Barrier between itself and the Containment Atmosphere (Section 2.1.3 (p25, 27) of OP-MC-CNT-NF).

C. Incorrect. According to OP-MC-CNT-NF (Section 3.1.2, p65) operating the Ice Condenser at elevated temperatures will actually have the opposite affect and aggravate the NF System Freeze/Thaw Cycle.

D. Incorrect. The Technical Specification Limit is $\leq 27^{\circ}F$, and is still being maintained.

Technical Reference(s)	OP-MC-CNT-NF p21-28, 67 Rev 29	(Attach if not previously provided)
	TS 3.6.12 Basis Rev 53	(Including version or revision #)

Proposed references to be provided to applicants during examination: _____

Learning Objective: CNT-NF #16 (As available)

Question Source:	Bank #		
	Modified Bank #	1003	(Note changes or attach parent)
	New		

Question History: Last NRC Exam _____

Question Cognitive Level:	Memory or Fundamental Knowledge	X
	Comprehension or Analysis	

10 CFR Part 55 Content:	55.41	7, 14
	55.43	

Comments:

K/A Match: Ice Sublimation has a direct tie to atmospheric conditions (i.e. pressure and temperature). For any given pressure, changes in temperature will result in sublimation rate changes.

Question 1003 CNTNF040 CNTNF040
1 Pt Increased sublimation is one of the problems which can be caused by operating with elevated Ice Condenser temperatures.

Which of the following best describes process of sublimation?

A. Ice melt due to compression caused by the weight of the column of ice.

B. The freeze/thaw cycles which cause buckling of the Ice Condenser wear slab.

C. Process of ice turning directly into a vapor without passing through the liquid phase.

D. Moisture in the air condenses and freezes on the Ice Condenser AHU coils causing blockage of the coils.

Answer 1003 C

Objective # 15

- **WHEN** isolating a portion of the NF System, always allow for expansion of cold glycol to ambient temperatures.

  Basis: Containment has a glycol expansion tank which can overflow. Auxiliary Building has a relief valve to prevent overpressure.

- No less than two chillers should be in operation when 2 Ice Machine Glycol Recirculating Pumps in service.

  Basis: This is done to prevent overpressurization of the system.

- Containment Isolation valves will close on "Lo-Lo Expansion Tank Level".

  Basis: Retains glycol inventory thereby reducing the risk of large spills.

- Formaldehyde may be generated in containment from excessive glycol leaks.

  Basis: Safety Concern

- Valves operated for Penetration Testing alignments must be operated without mechanical assistance.

  Basis: Ensures penetrations are tested as they would normally be isolated, without any extreme measures to isolate the flow path.

3.1.2 Normal Operation

The ice condenser is a passive system which requires no actuation signals. To keep the ice condenser at approximately 15^{0}F, each unit will have 30 AHUs operating to circulate air in the ice condenser, three or four operating chillers circulating glycol as cooling medium and two operating glycol pumps maintaining it at approximately 15^{0}F. The ice machines and ice loading equipment will not be operating.

Objective #16

Operating with elevated ice condenser temperatures during normal operation increases sublimation of the ice which requires ice replacement during outages.

(Sublimation is the process of turning a solid directly to a vapor without passing through the liquid phase.) Operating with elevated temperatures also creates a cyclic freeze/thaw cycle which has been identified with buckling/elevating the ice condenser wear slab which in turn has resulted in cracks adjacent to the inner portal frame. The combination of the elevation of the wear slab and cracks in the inner portal frame has shown to prevent the ice condenser doors from opening or exceeding their design opening torque.

The cyclic freeze/thaw cycle identified is the movement of the frost line in the foam concrete of the ice condenser floor. This movement is caused by the increase in temperature of the lower part of the floor during power operation. In the warmer spots the frost line moves up more, and water is free to work into cracks in the concrete.

Objective #16

When the plant cools during outages the frost line moves lower and more of the water freezes causing the ice to expand pushing the floor upward. The ice bays nearest the higher temperature areas in containment (near the S/G compartments) under go the greatest freeze/thaw amplitude and resulted in the greatest amount of door opening force when tested. Allowing elevated temperatures in the ice condenser aggravates the freeze/thaw cycle.

3.2 Abnormal and Emergency Operation

At the beginning of a LOCA, Lower containment pressure will be greater than upper containment pressure. When differential pressure is greater than 1.0 lbs/ft^2 the lower doors will open. The steam /air flow thru the ice condenser will open the intermediate and top deck doors. The ice will absorb large amounts of energy from the steam/hot air mixture as it passes through the ice condenser. This will reduce the peak pressure in containment.

Hydrogen accumulation inside containment during a LOCA presents an explosion hazard. Emergency procedure EP/1or2/A/5000/E-0 (Reactor Trip or Safety Injection) directs the operator to place the Hydrogen Igniters in operation and dispatch an operator to turn off the NF AHUs once a LOCA has been determined. The containment response to hydrogen combustion as a result of the deliberate ignition of hydrogen (Hydrogen Igniters) following core damage has been analyzed. This analysis has **not** been performed with the NF AHUs in service. Since the containment response analysis does **not** consider the impact of the operation of the NF AHUs, they should be stopped prior to the release of hydrogen in a core damage accident and prior to the operation of the igniters.

Objective #17, 18

Iodine presents a radiological problem (internal dose and dose at the site boundary in the event of containment leakage) in containment following a LOCA. By removing iodine, the radiological airborne hazard can be reduced. Some Iodine (about 80%) will be trapped in the containment sump water by hydrolysis:

$$3I_2 + 3H_2O \rightarrow 5I^- + IO_3^- + 6H^+$$

The efficiency of this interaction can be increased to almost 100% by increasing the pH of the solution. This is accomplished by adding sodium tetraborate to the ice making solution mixing tank.

Objective #2

2. **IF alarm was caused by a small high energy line break which resulted in an initial containment pressure rise to less than 1 PSIG, contact the Superintendent of Operations (or designee) to consider holding any open ice condenser lower inlet doors closed if containment pressure has returned to normal (less than .188 PSIG) and stabilized and the reactor is subcritical. Conditions to consider in making this decision are the core's decay heat load, primary system temperature and pressure, secondary system temperature and pressure, and containment temperature and pressure. This action must be approved by an Operations Section Manager (or higher management).**

3. **Perform a channel check of the inlet door monitoring system by performing PT/1/A/4200/14A (Ice Condenser Intermediate Deck Door and Monitoring System Inspection) or by verifying the alarm is consistent with actual physical ice condenser conditions (Actual observation of the ice condenser lower inlet doors, resultant rise of ice bed temperatures or other appropriate means). Log in the Control Room SRO log that the channel check was done within 4 hours after receiving the alarm. If the channel check is not done, declare the lower inlet door monitoring system inoperable.**

The purpose of the intermediate deck and doors is to provide a:

- **thermal barrier**
- **vapor barrier**
- **walking surface for maintenance of AHUs and inspection of the ice bed, weighing baskets, etc.**

The deck is divided into 48 sections. A subsection covers an area one-half the width of the ice condenser annulus and the length of one bay. Each sub-section consist of four door panels hinged at the center of the sub-section. Flexible membranes are installed from the deck to the adjacent walls to provide a vapor barrier. During a LOCA the doors open once the pressure overcomes gravity and are stopped by impacting against each other.

Objective #2

The top deck provides support for:

- **the bridge crane**
- **personnel**
- **grating which support blanket panels**

The upper doors (blanket panels) provide:

- a thermal barrier atop the upper plenum
- a vapor barrier
- for limited movement of air through vents during normal operation
- for unrestricted flow of air out during an accident

The top door is designed as flexible blanket panels. There are two blankets sandwiched together to cover one-half of a bay. The blanket panels are hinged to the top of the crane wall and extend to the containment wall.

2.1.4 Floor Drains **(refer to Drawing 7.2)**

The purpose of the floor drains during normal operation is to minimize heat (air) inflow to the lower plenum. During accident conditions, the purpose is to allow the melted ice to flow out of the ice condenser compartment to the lower containment sump.

There are 20 drains (each 12 inches wide) which provide a total drain area of 15 ft^2. This total area is needed to prevent water accumulation during small break accidents. For large breaks, water will return through the drains and out the inlet doors. The drain lines contain check valves which seals the ice condenser to prevent the loss of cold air but will open on less than 18 inches of water head. A 1.5 inch drain line taps off upstream of the check valve to prevent collection of water causing the check valve to open. These small drain lines tie into a common 2 inch header which drains to the Containment Floor and Equipment Sump 1A. Water soluble paper held down by water soluble tape cover the 12 inch drain openings to prevent warm air from entering the ice condenser through the drains.

2.2 Refrigeration Sub-system

The Refrigeration System serves as the heat sink for the ice condenser. Each Containment has 30 AHUs, 5 glycol chillers (25 tons units), 3 glycol pumps, and 24 floor cooling coils embedded in the concrete floor. The cooling of the ice condenser is achieved in three stages, the refrigeration loop, the glycol loop and the air cooling loop.

why is this a reference?

B 3.6 CONTAINMENT SYSTEMS

B 3.6.12 Ice Bed

BASES

BACKGROUND

The ice bed consists of a minimum of 1,890,000 lbs of ice stored within the ice condenser. The primary purpose of the ice bed is to provide a large heat sink in the event of a release of energy from a Design Basis Accident (DBA) in containment. The ice would absorb energy and limit containment peak pressure and temperature during the accident transient. Limiting the pressure and temperature reduces the release of fission product radioactivity from containment to the environment in the event of a DBA.

The ice condenser is an annular compartment enclosing approximately 300° of the perimeter of the upper containment compartment, but penetrating the operating deck so that a portion extends into the lower containment compartment. The lower portion has a series of hinged doors exposed to the atmosphere of the lower containment compartment, which, for normal unit operation, are designed to remain closed. At the top of the ice condenser is another set of doors exposed to the atmosphere of the upper compartment, which also remain closed during normal unit operation. Intermediate deck doors, located below the top deck doors, form the floor of a plenum at the upper part of the ice condenser. These doors also remain closed during normal unit operation. The upper plenum area is used to facilitate surveillance and maintenance of the ice bed.

The ice baskets contain the ice within the ice condenser. The ice bed is considered to consist of the total volume from the bottom elevation of the ice baskets to the top elevation of the ice baskets. The ice baskets position the ice within the ice bed in an arrangement to promote heat transfer from steam to ice. This arrangement enhances the ice condenser's primary function of condensing steam and absorbing heat energy released to the containment during a DBA.

In the event of a DBA, the ice condenser inlet doors (located below the operating deck) open due to the pressure rise in the lower compartment. This allows air and steam to flow from the lower compartment into the ice condenser. The resulting pressure increase within the ice condenser causes the intermediate deck doors and the top deck doors to open, which allows the air to flow out of the ice condenser into the upper compartment. Steam condensation within the ice condenser limits the pressure and temperature buildup in containment. A divider barrier (i.e., operating deck and extensions thereof) separates the upper and lower compartments and ensures that the steam is directed into the ice condenser.

BACKGROUND (continued)

The ice, together with the containment spray, is adequate to absorb the initial blowdown of steam and water from a DBA and the additional heat loads that would enter containment during several hours following the initial blowdown. The additional heat loads would come from the residual heat in the reactor core, the hot piping and components, and the secondary system, including the steam generators. During the post blowdown period, the Air Return System (ARS) returns upper compartment air through the divider barrier to the lower compartment. This serves to equalize pressures in containment and to continue circulating heated air and steam from the lower compartment through the ice condenser where the heat is removed by the remaining ice.

As ice melts, the water passes through the ice condenser floor drains into the lower compartment. Thus, a second function of the ice bed is to be a large source of borated water (via the containment sump) for long term Emergency Core Cooling System (ECCS) and Containment Spray System heat removal functions in the recirculation mode.

A third function of the ice bed and melted ice is to remove fission product iodine that may be released from the core during a DBA. Iodine removal occurs during the ice melt phase of the accident and continues as the melted ice is sprayed into the containment atmosphere by the Containment Spray System. The ice is adjusted to an alkaline pH that facilitates removal of radioactive iodine from the containment atmosphere. The alkaline pH also minimizes the occurrence of the chloride and caustic stress corrosion on mechanical systems and components exposed to ECCS and Containment Spray System fluids in the recirculation mode of operation.

It is important for ice to exist in the ice baskets, the ice to be appropriately distributed around the 24 ice condenser bays, and for open flow paths to exist around ice baskets. This is especially important during the initial blowdown so that the steam and water mixture entering the lower compartment do not pass through only part of the ice condenser, depleting the ice there while bypassing the ice in other bays.

Two phenomena that can degrade the ice bed during the long service period are:

a. Loss of ice by melting or sublimation; and

b. Obstruction of flow passages through the ice bed due to buildup of ice.

Both of these degrading phenomena are reduced by minimizing air leakage into and out of the ice condenser.

BACKGROUND (continued)

The ice bed limits the temperature and pressure that could be expected following a DBA, thus limiting leakage of fission product radioactivity from containment to the environment.

APPLICABLE SAFETY ANALYSES

The limiting DBAs considered relative to containment temperature and pressure are the loss of coolant accident (LOCA) and the steam line break (SLB). The LOCA and SLB are analyzed using computer codes designed to predict the resultant containment pressure and temperature transients. DBAs are not assumed to occur simultaneously or consecutively.

Although the ice condenser is a passive system that requires no electrical power to perform its function, the Containment Spray System, RHR Spray System, and the ARS also function to assist the ice bed in limiting pressures and temperatures. Therefore, the postulated DBAs are analyzed in regards to containment Engineered Safety Feature (ESF) systems, assuming the loss of one ESF bus, which is the worst case single active failure and results in one train each of the Containment Spray System, RHR Spray System, and ARS being inoperable.

The limiting DBA analyses (Ref. 1) show that the maximum peak containment pressure results from the LOCA analysis and is calculated to be less than the containment design pressure. For certain aspects of the transient accident analyses, maximizing the calculated containment pressure is not conservative. In particular, the cooling effectiveness of the ECCS during the core reflood phase of a LOCA analysis increases with increasing containment backpressure. For these calculations, the containment backpressure is calculated in a manner designed to conservatively minimize, rather than maximize, the calculated transient containment pressures, in accordance with 10 CFR 50, Appendix K (Ref. 2).

The maximum peak containment atmosphere temperature results from the SLB analysis and is discussed in the Bases for LCO 3.6.5, "Containment Air Temperature."

In addition to calculating the overall peak containment pressures, the DBA analyses include calculation of the transient differential pressures that occur across subcompartment walls during the initial blowdown phase of the accident transient. The internal containment walls and structures are designed to withstand these local transient pressure differentials for the limiting DBAs.

The ice bed satisfies Criterion 3 of 10 CFR 50.36 (Ref. 3).

BASES

LCO

The ice bed LCO requires the existence of the required quantity of stored ice, appropriate distribution of the ice and the ice bed, open flow paths through the ice bed, and appropriate chemical content and pH of the stored ice. The stored ice functions to absorb heat during the blowdown phase and long term phase of a DBA, thereby limiting containment air temperature and pressure. The chemical content and pH of the stored ice provide core SDM (boron content) and remove radioactive iodine from the containment atmosphere when the melted ice is recirculated through the ECCS and the Containment Spray System, respectively.

APPLICABILITY

In MODES 1, 2, 3, and 4, a DBA could cause an increase in containment pressure and temperature requiring the operation of the ice bed. Therefore, the LCO is applicable in MODES 1, 2, 3, and 4.

In MODES 5 and 6, the probability and consequences of these events are reduced due to the pressure and temperature limitations of these MODES. Therefore, the ice bed is not required to be OPERABLE in these MODES.

ACTIONS

A.1

If the ice bed is inoperable, it must be restored to OPERABLE status within 48 hours. The Completion Time was developed based on operating experience, which confirms that due to the very large mass of stored ice, the parameters comprising OPERABILITY do not change appreciably in this time period. Because of this fact, the Surveillance Frequencies are long (months), except for the ice bed temperature, which is checked every 12 hours. If a degraded condition is identified, even for temperature, with such a large mass of ice it is not possible for the degraded condition to significantly degrade further in a 48 hour period. Therefore, 48 hours is a reasonable amount of time to correct a degraded condition before initiating a shutdown.

B.1 and B.2

If the ice bed cannot be restored to OPERABLE status within the required Completion Time, the plant must be brought to a MODE in which the LCO does not apply. To achieve this status, the plant must be brought to at least MODE 3 within 6 hours and to MODE 5 within 36 hours. The allowed Completion Times are reasonable, based on operating experience, to reach the required plant conditions from full power conditions in an orderly manner and without challenging plant systems.

SURVEILLANCE REQUIREMENTS

SR 3.6.12.1

Verifying that the maximum temperature of the ice bed is ≤ 27°F ensures that the ice is kept well below the melting point. The 12 hour Frequency was based on operating experience, which confirmed that, due to the large mass of stored ice, it is not possible for the ice bed temperature to degrade significantly within a 12 hour period and was also based on assessing the proximity of the LCO limit to the melting temperature.

Furthermore, the 12 hour Frequency is considered adequate in view of indications in the control room, including the alarm, to alert the operator to an abnormal ice bed temperature condition. This SR may be satisfied by use of the Ice Bed Temperature Monitoring System.

SR 3.6.12.2

This SR ensures that initial ice fill and any subsequent ice additions meet the boron concentration and pH requirements of SR 3.6.12.7. The SR is modified by a NOTE that allows the chemical analysis to be performed on either the liquid or resulting ice of each sodium tetraborate solution prepared. If ice is obtained from offsite sources, then chemical analysis data must be obtained for the ice supplied.

SR 3.6.12.3

This SR ensures that the air/steam flow channels through the ice bed have not accumulated ice blockage that exceeds 15 percent of the total flow area through the ice bed region. The allowable 15 percent buildup of ice is based on the analysis of the sub-compartment response to a design basis LOCA with partial blockage of the ice condenser flow channels. The analysis did not perform detailed flow area modeling, but rather lumped the ice condenser bays into six sections ranging from 2.75 bays to 6.5 bays. Individual bays are acceptable with greater than 15 percent blockage, as long as 15 percent blockage is not exceeded for any analysis section.

To provide a 95 percent confidence that flow blockage does not exceed the allowed 15 percent, the visual inspection must be made for at least 54 (33 percent) of the 162 flow channels per ice condenser bay. The visual inspection of the ice bed flow channels is to inspect the flow area, by looking down form the top of the ice bed, and where view is achievable up from the bottom of the ice bed. Flow channels to be inspected are determined by random sample. As the most restrictive ice bed flow passage is found at a lattice frame elevation, the 15 percent blockage criteria only applies to "flow channels" that comprise the area:

SURVEILLANCE REQUIREMENTS (continued)

a. Between ice baskets, and

b. Past lattice frames and wall panels.

Due to a significantly larger flow area in the regions of the upper deck grating and the lower inlet plenum support structures and turning vanes, it would require a gross buildup of ice on there structures to obtain a degradation in air/steam flow. Therefore, these structures are excluded as part of a flow channel for application of the 15 percent blockage criteria. Plant and industry experience have shown that removal of ice from the excluded structures during the refueling outage is sufficient to ensure they remain operable throughout the operating cycle. Thus, removal of any gross ice buildup on the excluded structures is performed following outage maintenance activities.

Operating experience has demonstrated that the ice bed is the region that is the most flow restrictive, due to the normal presence of ice accumulation on lattice frames and wall panels. The flow area through the ice basket support platform is not a more restrictive flow area because it is easily accessible from the lower plenum and is maintained clear of ice accumulation. There is not a mechanistically credible method for ice to accumulate on the ice basket support platform during plant operation. Plant and industry experience has shown that the vertical flow area through the ice basket support platform remains clear of ice accumulation that could produce blockage. Normally only a glaze may develop or exist on the ice basket support platform which is not significant to blockage of flow area. Additionally, outage maintenance practices provided measures to clear the ice basket support platform following maintenance activities of any accumulation of ice that could block flow areas.

Activities that have a potential for significant degradation of flow channels should be limited to outage periods. Performance of this SR following completion of these maintenance activities assures the ice bed is in an acceptable condition for the duration of the operating cycle.

Frost buildup or lose ice is not to be considered as flow channel blockage, whereas attached ice is considered blockage of a flow channel. Frost is the solid form of water that is loosely adherent, and can be brushed off with the open hand.

SR 3.6.12.4

Ice mass determination methodology is designed to verify the total as-found (pre-maintenance) mass of ice in the ice bed, and the appropriate distribution of that mass, using a random sampling of individual baskets. The random sample will include at least 30 baskets from each of three

SURVEILLANCE REQUIREMENTS (continued)

defined Radial Zones (at least 90 baskets total). Radial Zone A consists of baskets located in rows 8, and 9 (innermost rows adjacent to the Crane Wall), Radial Zone B consists of baskets located in rows 4, 5, 6, and 7 (middle rows of the ice bed), and Radial Zone C consists of baskets located in rows 1, 2, and 3 (outermost rows adjacent to the Containment Vessel).

The Radial Zones chosen include the row groupings nearest the inside and outside walls of the ice bed and the middle rows of the ice bed. These groupings facilitate the statistical sampling plan by creating sub-populations of ice baskets that have similar mean mass and sublimation characteristics.

Methodology for determining sample ice basket mass will be either by direct lifting or by alternative techniques. Any method chosen will include procedural allowances for the accuracy of the method used. The number of sample baskets in any Radial Zone may be increased once by adding 20 or more randomly selected baskets to verify the total mass of that Radial Zone.

In the event the mass of a selected basket in a sample population (initial or expanded) cannot be determined by any available means (e.g., due to surface ice accumulation or obstruction), a randomly selected representative alternate basket may be used to replace the original selection in that sample population. If employed, the representative alternate must meet the following criteria:

a. Alternate selection must be from the same bay-Zone (i.e., same bay, same Radial Zone) as the original selection, and

b. Alternate selection cannot be a repeated selection (original or alternate) in the current Surveillance, and cannot have been used as an analyzed alternate selection in the three most recent Surveillances.

The complete basis for the methodology used in establishing the 95% confidence level in the total ice bed mass is documented in Ref. 5.

The total ice mass and individual Radial Zone ice mass requirements defined in this Surveillance, and the minimum ice mass per basket requirement defined by SR 3.6.12.5, are the minimum requirements for

SURVEILLANCE REQUIREMENTS (continued)

OPERABILITY. Additional ice mass beyond the SRs is maintained to address sublimation. This sublimation allowance is generally applied to baskets in each Radial Zone, as appropriate, at the beginning of an operating cycle to ensure sufficient ice is available at the end of the operating cycle for the ice condenser to perform its intended design function.

The Frequency of 18 months was based on ice storage tests, and the typical sublimation allowance maintained in the ice mass over and above the minimum ice mass assumed in the safety analyses. Operating and maintenance experience has verified that, with the 18 month Frequency, the minimum mass and distribution requirements in the ice bed are maintained.

SR 3.6.12.5

Verifying that each selected sample basket from SR 3.6.12.4 contains at least 600 lbs of ice in the as-found (pre-maintenance) condition ensures that a significant localized degraded mass condition is avoided.

This SR establishes a per basket limit to ensure any ice mass degradation is consistent with the initial conditions of the DBA by not significantly affecting the containment pressure response. Ref. 5 provides insights through sensitivity runs that demonstrate that the containment peak pressure during a DBA is not significantly affected by the ice mass in a large localized region of baskets being degraded below the required safety analysis mean, when the Radial Zone and total ice mass requirements of SR 3.6.12.4 are satisfied. Any basket identified as containing less than 600 lbs of ice requires appropriately entering the TS Required Action for an inoperable ice bed due to the potential that it may represent a significant condition adverse to quality.

As documented in Ref. 5, maintenance practices actively manage individual ice basket mass above the required safety analysis mean for each Radial Zone. Specifically, each basket is serviced to keep its ice mass above 725 lbs for Radial Zone A, 1043 lbs for Radial Zone B, and 1043 lbs for Radial Zone C. If a basket sublimates below the safety analysis mean value, this instance is identified within the plant's corrective action program, including evaluating maintenance practices to identify the cause and correct any deficiencies. These maintenance practices provide defense in depth beyond compliance with the ice bed surveillance requirements by limiting the occurrence of individual baskets with ice mass less than the required safety analysis mean.

SURVEILLANCE REQUIREMENTS (continued)

SR 3.6.12.6

This SR ensures that a representative sampling of accessible portions of ice baskets, which are relatively thin walled, perforated cylinders, have not been degraded by wear, cracks, corrosion, or other damage. The SR is designed around a full-length inspection of a sample of baskets, and is intended to monitor the effect of the ice condenser environment of ice baskets. The groupings defined in the SR (two baskets in each azimuthal third of the ice bed) ensure that the sampling of baskets is reasonably distributed. The Frequency of 40 months for a visual inspection of the structural soundness of the ice baskets is based on engineering judgment and considers such factors as the thickness of the basket walls relative to corrosion rates expected in their service environment and the results of the long term ice storage testing.

SR 3.6.12.7

Verifying the chemical composition of the stored ice ensures that the stored ice has a boron concentration $\geq$ 1800 ppm and $\leq$ 2330 ppm as sodium tetraborate and a high pH, $\geq$ 9.0 and $\leq$ 9.5 at 20°C, in order to meet the requirement for borated water when the melted ice is used in the ECCS recirculation mode of operation. Additionally, the minimum boron concentration setpoint is used to assure reactor subcriticality in a post LOCA environment, while the maximum boron concentration is used as a bounding value in the hot leg switchover timing calculation (Ref. 4). This is accomplished by obtaining at least 24 ice samples. Each sample is taken approximately one foot from the top of the ice of each randomly selected ice basket in each ice condenser bay. The SR is modified by a NOTE that allows the boron concentration and pH value obtained from averaging the individual samples analysis results to satisfy the requirements of the SR. If either the average boron concentration or average pH value is outside their prescribed limit, then entry into ACTION Condition A is required. Sodium tetraborate has been proven effective in maintaining the boron content for long storage periods, and it also enhances the ability of the solution to remove and retain fission product iodine. The high pH is required to enhance the effectiveness of the ice and the melted ice in removing iodine from the containment atmosphere. This pH range also minimizes the occurrence of chloride and caustic stress corrosion on mechanical systems and components exposed to ECCS and Containment Spray System fluids in the recirculation mode of operation. The Frequency of 54 months is intended to be consistent with the expected length of three fuel cycles, and was developed considering these facts:

a. Long term ice storage tests have determined that the chemical composition of the stored ice is extremely stable;

SURVEILLANCE REQUIREMENTS (continued)

b. There are no normal operating mechanisms that significantly change the boron concentration of the stored ice, and pH remains within a 9.0 – 9.5 range when boron concentrations are above approximately 1200 pm; and

c. Operating experience has demonstrated that meeting the boron concentration and pH requirements has not been a problem.

REFERENCES

1. UFSAR, Section 6.2.

2. 10 CFR 50, Appendix K.

3. 10 CFR 50.36, Technical Specifications, (c)(2)(ii).

4. UFSAR, Section 6.3.3.10.

5. Topical Report ICUG-001, Application of the Active Ice Mass Management Concept to the Ice Condenser Ice Mass Technical Specification, revision 2.

6. UFSAR, Table 18-1 and Section 18.2.14.

7. McGuire License Renewal Commitments MCS-1274.00-00-0016, Section 4.19, Ice Condenser Inspections.

	OBJECTIVE	NLO	NLOR	LPRO	LPSO	LOR
11	Describe how the ice condenser temperature is maintained during normal operation.	X	X	X	X	X
12	State the purpose of the following NF Ice Making System components: • Glycol Recirc Pumps • "Run-Off-Fill" switches • Ice Making Solution Mixing Tank.	X	X	X	X	
13	Discuss the basic flowpath of ice from the ice storage bin to the ice baskets in the ice condenser.	X	X	X	X	
14	Concerning the ice condenser chart recorder: • State the purpose • List the information that can be accessed • Describe the modes of operation.			X	X	X
15	Given a limit and/or precaution associated with an NF System Operating Procedure, discuss its basis and applicability.	X	X	X	X	X
16	State the problems which will occur as a result of operating with elevated Ice condenser temperature.	X	X	X	X	X
17	State the purpose of iodine removal from containment following a LOCA..	X	X	X	X	X
18	Explain how iodine removal from containment atmosphere is accomplished and the effect of (sodium tetraborate) $Na_2B_4O_7$ on the removal process.	X	X	X	X	X
19	Describe how a failure of the ice condenser doors to open on a LOCA will effect containment sump level.	X	X	X	X	X
20	Describe how a failure of the ice condenser doors to open on a HELBIC will effect peak containment pressure.	X	X	X	X	X

Examination Outline Cross-reference:	Level	RO	SRO
	Tier #	2	
	Group #	1	
	K/A #	GKA 2.2.22 (026)	
	Importance Rating	4.0	

(Equipment Control: Knowledge of limiting conditions for operations and safety limits.)

Proposed Question: Common 15

The following conditions exist on Unit 1:

- A plant cooldown and depressurization is in progress.
- NC System Temperature is 320°F
- NC System Pressure is 325 psig.
- All plant components are aligned normally for the present plant conditions.

Subsequently, a fire in the breaker cubicle for the 1B NS Pump occurs.

Which ONE (1) of the following describes the impact on Technical Specification LCO 3.6.6, "Containment Spray System?"

A. LCO 3.6.6 MUST be entered with operability restored within 1 hour.

B. LCO 3.6.6 MUST be entered with operability restored within 72 hours.

C. LCO 3.6.6 will NOT be entered because the A Train of NS is operable.

D. LCO 3.6.6 is NOT applicable in the present plant Mode of Operation.

Proposed Answer: B

Explanation (Optional):

A. Incorrect. While it is true that LCO 3.6.6 requires that two trains of Containment Spray (NS) be Operable in Modes 1-4, and that the plant is in Mode 4, the LCO has no action requirements within 1 hour.

B. Correct. LCO 3.6.6 requires that two trains of Containment Spray (NS) be Operable in Modes 1-4. The plant is in Mode 4, and therefore Trains A and B of NS are required. Action is required (Restore Operability) within 72 hours.

C. Incorrect. In Mode 4 both trains of NS are required to be Operable. To say

that the LCO is satisfied by only the A Train of NS being Operable is an error.

D. Incorrect. Technical Specification Table 1.1-1 defines the Modes of Operation. Mode four is defined as NC Temperature < 350°F > 200°F. This would be correct if the NC System Temperature were < 200°F.

Technical Reference(s): Tech Specs 3.6.6 A#184/166 (Attach if not previously provided)
Tech Specs Table 1.1-1, A#194/175 (Including version or revision #)

Proposed references to be provided to applicants during examination: None

Learning Objective: ECC-NS #13 (As available)

Question Source: Bank # ____
Modified Bank # ____ (Note changes or attach parent)
New X

Question History: Last NRC Exam ____

Question Cognitive Level: Memory or Fundamental Knowledge ____
Comprehension or Analysis X

10 CFR Part 55 Content: 55.41 5
55.43 ____

Comments:
KA is matched because operability of NS (Containment Spray) system is evaluated for lower mode conditions

3.6 CONTAINMENT SYSTEMS

3.6.6 Containment Spray System

LCO 3.6.6 Two containment spray trains shall be OPERABLE.

APPLICABILITY: MODES 1, 2, 3, and 4.

ACTIONS

CONDITION	REQUIRED ACTION	COMPLETION TIME
A. One containment spray train inoperable.	A.1 Restore containment spray train to OPERABLE status.	72 hours
B. Required Action and associated Completion Time not met.	B.1 Be in MODE 3. AND B.2 Be in MODE 5.	6 hours 84 hours

SURVEILLANCE REQUIREMENTS

SURVEILLANCE		FREQUENCY
SR 3.6.6.1	Verify each containment spray manual, power operated, and automatic valve in the flow path that is not locked, sealed, or otherwise secured in position is in the correct position.	31 days

(continued)

SURVEILLANCE		FREQUENCY
SR 3.6.6.2	Verify each containment spray pump's developed head at the flow test point is greater than or equal to the required developed head.	In accordance with the Inservice Testing Program
SR 3.6.6.3	Verify each automatic containment spray valve in the flow path that is not locked, sealed, or otherwise secured in position, actuates to the correct position on an actual or simulated actuation signal.	18 months
SR 3.6.6.4	Verify each containment spray pump starts automatically on an actual or simulated actuation signal.	18 months
SR 3.6.6.5	Verify that each spray pump is de-energized and prevented from starting upon receipt of a terminate signal and is allowed to start upon receipt of a start permissive from the Containment Pressure Control System (CPCS).	18 months
SR 3.6.6.6	Verify that each spray pump discharge valve closes or is prevented from opening upon receipt of a terminate signal and is allowed to open upon receipt of a start permissive from the Containment Pressure Control System (CPCS).	18 months
SR 3.6.6.7	Verify each spray nozzle is unobstructed.	10 years

Table 1.1-1 (page 1 of 1)
MODES

MODE	TITLE	REACTIVITY CONDITION (k_{eff})	% RATED THERMAL POWER[a]	AVERAGE REACTOR COOLANT TEMPERATURE (°F)
1	Power Operation	$\geq$ 0.99	> 5	NA
2	Startup	$\geq$ 0.99	$\leq$ 5	NA
3	Hot Standby	< 0.99	NA	$\geq$ 350
4	Hot Shutdown[b]	< 0.99	NA	350 > T_{avg} > 200
5	Cold Shutdown[b]	< 0.99	NA	$\leq$ 200
6	Refueling[c]	NA	NA	NA

(a) Excluding decay heat.

(b) All reactor vessel head closure bolts fully tensioned.

(c) One or more reactor vessel head closure bolts less than fully tensioned.

OBJECTIVES

	Objective	NLO	NLOR	LPRO	LPSO	LOR
13	Concerning the Technical Specifications related to the NS System:					
	• Given the LCO title, state the LCO including the composition of a Containment Spray Train listed in the LCO section of Bases (including any COLR values) and applicability.			X X	X X	X X
	• For any LCO's that have action required within one hour, state the action.			X	X	X
	• Given a set of parameter values or system conditions, determine if any Tech Spec LCO's is (are) not met and any action(s) required within one hour.			X	X	X
	• Given a set of plant parameters or system conditions and the appropriate Tech Specs, determine the required action.				X	*
	• Discuss the bases for a given Tech Spec LCO or Safety Limit					
	*** SRO Only**					

Examination Outline Cross-reference:	Level	RO	SRO
	Tier #	2	
	Group #	1	
	K/A #	026 K3.02	
	Importance Rating	4.2	

(Knowledge of the effect that a loss or malfunction of the CSS will have on the following: Recirculation spray system)

Proposed Question: Common 16

The following conditions exist on Unit 1:

- Large Break LOCA in progress.
- Train B ND aligned for CLR.
- 1NI-185A (RB Sump to Train A ND and NS) cannot be opened, and 1A ND Pump has been stopped.
- FWST Lo-Lo Level alarm has occurred.
- Both 1A and 1B NS Pumps are stopped.

Which ONE (1) of the following identifies an action that must occur to avoid exceeding peak Containment pressure?

A. The 1A NS Pump must be restarted taking suction from the FWST until the 1B NS pump can be aligned for recirculation.

B. The 1A ND Pump must be restarted taking suction from the FWST until the 1B NS pump can be aligned for recirculation.

C. The 1B NS Pump must be restarted in the recirculation alignment and RN flow established to the 1B NS Heat Exchanger within 3 minutes.

D. The 1B ND Pump must be manually aligned to provide NS within 30 minutes.

Proposed Answer: **C**

Explanation (Optional):

A. Incorrect. Restarting any pump on the FWST with the Lo-Lo Level alarm in will cause vortexing in the FWST and loss of NPSH to the Pump. According to the E-1 Background document (p159, Rev 17), the NS Pumps must be stopped within 45 seconds to protect the pumps from this

phenomena. This is Plausible since ECA-1.1 allows continuing ECCS Pump operation on FWST until 20" is reached (FWST Lo-Lo Level alarm is 33"), after which the FWST is considered empty, and all pumps must be stopped (See ECA-1.1, Steps 9 and 34).

B. Incorrect. Cannot start any pump on FWST (See A).

C. Correct. The E-1 Background document (p159, Rev 17) states that at least one NS Pump must be restarted in the recirculation alignment and cooling water established to the NS Heat Exchanger within 3 minutes of Stopping the NS Pumps in order to limit Peak Containment pressure.

D. Incorrect. According to Step 9 of ES-1.3 this action occurs at > 50 Minutes from the time of the event. FSAR section 6.3.3.9 indicates that this action occurs at approximately 50 minutes to ensure that the Core Decay Heat Removal requirements are being met by operating NV and NI pumps.

Technical Reference(s): ES-1.3 steps 8/9, Rev 23 (Attach if not previously provided)

E-1 Background Document p159, Rev 17 (Including version or revision #)

ECC-NS p 35, 37 Rev 29

Proposed references to be provided to applicants during examination: None

Learning Objective: ECC-NS #11, EP-E1 #7 (As available)

Question Source: Bank # _____

Modified Bank # _____ (Note changes or attach parent)

New X

Question History: Last NRC Exam NA

Question Cognitive Level: Memory or Fundamental Knowledge X

Comprehension or Analysis _____

10 CFR Part 55 Content: 55.41 7, 10

55.43 _____

Comments:

CLASSROOM TIME (Hours)

NLO	NLOR	LPRO	LPSO	LOR
N/A	N/A	5.0	5.0	4.0

OBJECTIVES

SEQ	OBJECTIVE	NLO	NLOR	LPRO	LPSO	LOR
1	Explain the purpose for each procedure in the E-1 series. EPE1001			X	X	
2	Discuss the entry and exit guidance for each procedure in the E-1 series. EPE1002			X	X	
3	Discuss the mitigating strategy (major actions) of each procedure in the E-1 series. EPE1003			X	X	X
4	Discuss the basis for any note, caution or step for each procedure in the E-1 series. EPE1004			X	X	X
5	Given the Foldout page discuss the actions included and the basis for these actions. EPE1005			X	X	X
6	Given the appropriate procedure, evaluate a given scenario describing accident events and plant conditions to determine any required action and its basis. EPE1006			X	X	X
7	Discuss the time critical task(s) associated with the E-1 series procedures including the time requirements and the basis for these requirements. EPE1007			X	X	X

STEP 8 Check if NS should be aligned for recirc:

PURPOSE: To align the NS system for recirculation when FWST level reaches the Lo Lo Alarm Setpoint.

BASIS: The actions to align the NS system for cold leg recirc contained in this step are required by the FSAR. Which assumes the following actions are taken within the required Times:

> The NS Pumps are stopped within 45 sec. of receiving the FWST LoLo level alarm to prevent vortexing and air entrainment.
>
> At least one NS Pump Is restarted in Recirculation Alignment and Cooling Water established to the NS Heat Exchanger within 3 minutes of Stopping the NS Pumps. This is necessary to limit Peak Containment pressure.
>
> See the Time Critical Task Description in Section 10.4

This step requires at least one "3 FT" alarm being lit prior to starting pumps. This ensures adequate level after starting NS pump since sump level may go down approx. 1/2 ft. when NS pump is started due to upper containment holdup.

CAUTION :

- Steps to reset Containment Spray and stop NS pumps must be completed within 45 seconds of Receiving the FWST Level LoLo Alarm
- This Step Applies even after leaving this EP

PURPOSE: To inform the operator of the time critical nature of this step.

3.2. Abnormal and Emergency Operation

Objective #5, 6, 8

The Containment Spray System will be initiated either manually from the Control Room or on coincidence of two out of four High-High Containment Pressure signal. For either initiating signal, CPCS must be at least 0.35 psig for the discharge valves to open or for the pumps to start. Either of the train related discharge valves must also be open to allow a pump start. An "Sp" signal will start the Containment Spray Pumps and open the discharge valves to the spray headers if CPCS interlock is met. If after an "Sp" signal, the containment pressure decreases to < .35 psig the containment spray pumps are automatically turned off and the discharge valves are automatically closed. If the pressure increases after the pumps have stopped, the Containment Pressure Control System will automatically open the discharge valves at ≥ .35 psig and if pressure continues to increase CPCS will restart the pumps at ≥ 0.8 psig. This provides a deadband and prevents frequent cycling of the pumps. The pumps and valves will continue cycling, at these setpoints until the spray signal is reset.

If an "Sp" signal exists and containment pressure increases above .35 psig (opening the valves), the pumps may be manually started from the control room. The NS Pumps can be started with the pump start pushbutton any time CPCS is ≥ .35 psig and its discharge valves are open.

The Residual Heat Removal System shifts from the injection phase to the recirculation phase automatically when the Refueling Water Storage Tank level reaches the low level alarm point (180"). If the automatic switchover fails, the operator is instructed to manually switch to the recirculation.

The NS pumps are manually aligned to the containment sump by the operator when the FWST reaches the low-low level alarm point (33"). When the FWST low-low level alarm is received, the operator has about 45 seconds to stop the NS Pumps before pump vortexing (air entrainment) begins. This 45 seconds assumes that both NS Pumps are running and some conservative assumptions on vortexing phenomena. To accomplish this swap the NS start signal can be reset even if containment pressure is above 3 psig. However the Safety Injection and DG sequencer signals must be reset also to allow the stopping of the NS pumps.

The spray flow from the Residual Heat Removal Pumps is initiated to assure adequate spray to counteract any rise in Containment pressure that might occur after all the ice has melted. FSAR Figure 6-12 shows the ice melt transient lasting about one hour.

NS System CPCS Failures (EP/1/A/5000/FR-Z.1, Enclosure 2)

Objective #3

In the event of a CPCS malfunction, some local operator actions may be required. A malfunction may require the operator to locally place valves in the desired position. Other malfunctions may require obtaining keys from the key locker, and proceeding to the CPCS Cabinet (Auxiliary Building, 750 - Train A, 733 - Train B, Electrical Penetration Room). Here the key would be used to place the appropriate control switch for the malfunctioning component in the "TEST" position. The test potentiometer would then be adjusted until the component responded as desired.

3.3. Time Critical Operator Actions

During transfer to Cold Leg Recirc., NS time critical actions include the following:

- Stopping the NS pumps within 45 seconds of receiving FWST Lo Lo level alarm (times for limiting scenario with 2 trains in service based on FWST depletion rate).
- Align and restart NS (times for limiting scenario with just 1 train in service): Restart one NS pump and initiate RN flow to NS Hx (start opening RN to NS throttle valve) within 3 minutes of stopping NS pumps.

Objective #13

4.0 TECHNICAL SPECIFICATIONS

4.1. Tech Spec 3.6.6, Containment Spray System.

4.2. Tech Spec 3.6.15, Containment Recirculation Drains

4.3. Tech Spec 3.3.2, Engineered Safety Feature Actuation System (ESFAS) Instrumentation

4.4. SLC 16.9.16, Area Temperature Monitoring

5.0 INDUSTRY EVENTS

6.0 SUMMARY

Review Class Objectives

ACTION/EXPECTED RESPONSE	RESPONSE NOT OBTAINED
8. Check if NS should be aligned for recirc as follows:	
__ a. Check "FWST LEVEL LO-LO" alarm - LIT.	a. Perform the following: **CAUTION** • **Steps to reset Containment Spray and stop NS pumps must be completed within 45 seconds of receiving "FWST Level LO-LO" alarm.** • **This step applies even after leaving this EP.** 1) **WHEN** "FWST LEVEL LO-LO" alarm setpoint (33 inches) is reached, **THEN** immediately perform the following: __ a) Reset Containment Spray. __ b) Stop 1A NS pump. __ c) Stop 1B NS pump. __ d) Perform Steps 8.e through 8.i. __ 2) Ensure this step is flagged and crew prepared to perform it immediately upon receiving alarm. __ 3) **GO TO** Step 9.
__ b. Reset Containment Spray.	
__ c. Stop 1A NS pump.	
__ d. Stop 1B NS pump.	

ACTION/EXPECTED RESPONSE	RESPONSE NOT OBTAINED
8. (Continued)	
__ e. Check both NS pumps - OFF.	e. Perform the following: __ 1) Reset Containment Spray. __ 2) Stop both NS pumps. 3) **IF** NS pump still on, **THEN** perform the following: __ a) Depress and hold "RESET" on affected train's sequencer. __ b) Stop NS pump. __ c) Release "RESET" on sequencer. __ 4) **IF** both NS pumps are off, **THEN GO TO** Step 8.f. 5) Dispatch operator to immediately perform the following on running NS pump breaker: __ a) Pull control power fuses. __ b) Open NS pump breaker using "TRIP" button on breaker. __ 6) **IF** 1A NS pump failed to trip from control room, **THEN GO TO** Step 8.h to align 1B NS pump. __ 7) **IF** 1B NS pump failed to trip from control room, **THEN** consider 1B NS pump "NOT" available to run in subsequent steps.
__ f. Check 1A NS pump - AVAILABLE TO RUN.	__ f. **GO TO** Step 8.h.

ACTION/EXPECTED RESPONSE	RESPONSE NOT OBTAINED
8. (Continued)	
g. Align A Train NS to containment sump as follows:	
__ 1) Check 1NI-185A (RB Sump To Train A ND & NS) - OPEN.	__ 1) **GO TO** Step 8.h.
__ 2) Close 1NS-20A (A NS Pump Suct From FWST).	__ 2) **GO TO** Step 8.h.
__ 3) Wait for 1NS-20A to close.	__ 3) **IF** 1NS-20A remains open or intermediate for over 30 seconds, **THEN GO TO** Step 8.h.
__ 4) Open 1NS-18A (A NS Pump Suct From Cont Sump).	__ 4) **GO TO** Step 8.h.
__ 5) Check at least one alarm "CONT SUMP LEVEL GREATER THAN 3 FT" on 1AD-14 or 1AD-15 - LIT.	5) **IF** both alarms are dark, **THEN** perform the following: __ a) **IF** either train containment sump level indication is currently declared inoperable per Tech Specs, **THEN** assume adequate sump level and **GO TO** Step 8.g.6). __ b) **WHEN** either alarm is lit, **THEN** start NS pump. __ c) **GO TO** Step 8.g.8).
__ 6) Wait for 1NS-18A to open.	__ 6) **IF** 1NS-18A remains closed or intermediate for over 30 seconds, **THEN GO TO** Step 8.h.
__ 7) Start 1A NS pump.	__ 7) **GO TO** Step 8.h.
__ 8) Open 1RN-134A (A NS Hx Inlet Isol).	__ 8) **GO TO** Step 8.h.
__ 9) **WHEN** 1RN-134A begins to open, **THEN** throttle open 1RN-137A (A NS Hx Outlet Isol) to establish 3800 GPM to 1A NS HX.	

ACTION/EXPECTED RESPONSE	RESPONSE NOT OBTAINED
8. (Continued)	
h. Align B Train NS to containment sump as follows:	
__ 1) Check 1B NS pump - AVAILABLE TO RUN.	__ 1) **GO TO** Step 8.i.
__ 2) Check 1NI-184B (RB Sump To Train B ND & NS) - OPEN.	__ 2) **GO TO** Step 8.i.
__ 3) Close 1NS-3B (B NS Pump Suct From FWST).	__ 3) **GO TO** Step 8.i.
__ 4) Wait for 1NS-3B to close.	__ 4) **IF** 1NS-3B remains open or intermediate for over 30 seconds, **THEN GO TO** Step 8.i.
__ 5) Open 1NS-1B (B NS Pump Suct From Cont Sump).	__ 5) **GO TO** Step 8.i.
__ 6) Check at least one alarm "CONT SUMP LEVEL GREATER THAN 3 FT" on 1AD-14 or 1AD-15 - LIT.	6) **IF** both alarms are dark, **THEN** perform the following: __ a) **IF** either train containment sump level indication is currently declared inoperable per Tech Specs, **THEN** assume adequate sump level and **GO TO** Step 8.h.7). __ b) **WHEN** either alarm is lit, **THEN** start NS pump. __ c) **GO TO** Step 8.h.9).
__ 7) Wait for 1NS-1B to open.	__ 7) **IF** 1NS-1B remains closed or intermediate for over 30 seconds, **THEN GO TO** Step 8.i.
__ 8) Start 1B NS pump.	__ 8) **GO TO** Step 8.i.
__ 9) Open 1RN-235B (B NS HX Inlet Isol).	__ 9) **GO TO** Step 8.i.
__ 10) **WHEN** 1RN-235B begins to open, **THEN** throttle open 1RN-238B (B NS Hx Outlet Isol) to establish 3100 GPM to 1B NS HX.	

ACTION/EXPECTED RESPONSE	RESPONSE NOT OBTAINED
8. (Continued)	
i. Check NS pumps:	i. Perform the following:
__ • Both NS pumps - ON	1) **IF** any NS pump is isolated from containment sump, **THEN** dispatch operator to perform the following:
__ • Both NS pumps - ALIGNED TO SUMP.	__ a) Pull control power fuses on affected NS pump. __ b) Ensure NS pump breaker is open.
	__ 2) **IF** affected NS pump would not trip from control room, **THEN** place INFO tag on affected NS pump stating "Leave NS pump isolated from sump". (If NS pump sucked in air, the air may go to ND suction if NS suction valve opened.)
	__ 3) **IF AT ANY TIME** the idle NS pump(s) can be started, **THEN** ensure proper alignment **PER** Step 8.g or 8.h as required.

ACTION/EXPECTED RESPONSE	RESPONSE NOT OBTAINED
9. Check if ND aux containment spray is required:	
__ a. Containment pressure - GREATER THAN 3 PSIG.	a. Perform the following: __ 1) **IF AT ANY TIME** containment pressure goes above 3 PSIG, **AND** both trains of ND aux containment spray are closed, **THEN** perform Step 9. __ 2) **GO TO** Step 10.
b. Check the following: __ • Time after reactor trip - GREATER THAN 50 MINUTES • At least one of the following - ENERGIZED: __ • 1NI-173A (Train A ND To A & B CL) OR __ • 1NI-178B (Train B ND To C & D CL).	b. Perform the following: 1) Ensure operator has been dispatched to remove white tags and close the following breakers: __ • 1EMXA-R2A (1A ND To A&B Cold Legs Cont Outside Isol Motor (1NI-173A)) (aux bldg, 750, FF-54, FF-55) __ • 1EMXB1-6B (1B ND To C&D NC Cold Leg Cont Outside Isol Motor (1NI-178B)) (aux bldg, 733, GG-55, GG-56). __ 2) Designate someone to notify crew when 50 minutes from reactor trip have elapsed. **CAUTION** **This step applies even after leaving this EP.** __ 3) **WHEN** at least one valve energized, **AND** time after reactor trip is greater than 50 minutes, **THEN** perform Step 9. __ 4) **GO TO** Step 10.

ACTION/EXPECTED RESPONSE	RESPONSE NOT OBTAINED
9. (Continued)	
__ c. Check at least one alarm "CONT SUMP LEVEL GREATER THAN 3 FT" on 1AD-14 or 1AD-15 - LIT.	c. **IF** both alarms are dark, **THEN** perform the following: __ 1) **IF** either train containment sump level indication is currently declared inoperable per Tech Specs, **THEN** assume adequate sump level and **GO TO** Step 9.d. __ 2) **WHEN** either alarm is lit, **THEN** perform Step 9. __ 3) **GO TO** Step 10.
d. Check if core cooling can be maintained with minimum S/I flow: __ • At least one NV pump - ON __ • At least one NI pump - ON • At least one of the following valves - OPEN: __ • 1NI-9A (NC Cold Leg Inj From NV) OR __ • 1NI-10B (NC Cold Leg Inj From NV).	d. Check ND train status: __ 1) **IF** both ND trains are aligned **AND** operating in Cold Leg Recirc, **THEN** **GO TO** Step 9.e. __ 2) **GO TO** Step 10.

ACTION/EXPECTED RESPONSE	RESPONSE NOT OBTAINED

9. (Continued)

e. Establish ND aux containment spray from one train that is in Cold Leg Recirc mode:

- For A train:

__ 1) Close 1NI-173A (Train A ND To A & B CL).

__ 2) Open 1NS-43A (A ND To NS Cont Outside Isol).

OR

- For B train:

__ 1) Close 1NI-178B (Train B ND To C & D CL).

__ 2) Open 1NS-38B (B ND To NS Cont Outside Isol).

CAUTION **If an ND pump aligned to aux containment spray ever stops with its spray valve open, the associated spray line will void. If this were to occur, Enclosure 4 (ND Pump Restart Requirement If Aux Spray Is Open) will prevent a water hammer and potential pipe failure in the Annulus.**

__ f. **WHEN** time allows, **THEN** place INFO tag on ND pump control switch **PER** Enclosure 4 (ND Pump Restart Requirement If Aux Spray Is Open).

CAUTION **Failure to stop ND aux containment spray when required may result in a negative containment pressure.**

__ g. **WHEN** containment pressure less than 1 PSIG, **THEN** stop ND aux containment spray **PER** Enclosure 5 (Securing ND Aux Containment Spray).

KA is matched because the item evaluates failure of Containment Spray and resulting effects on operation in Recirc mode

Examination Outline Cross-reference:	Level	RO	SRO
	Tier #	2	
	Group #	1	
	K/A #	039 A4.04	
	Importance Rating	3.8	

(Ability to manually operate and/or monitor in the control room: Emergency feedwater pump turbines)

Proposed Question: Common 17

With Unit 2 at 100% power the following occurs:

- B Train equipment is in service.
- The normal supply to 2ETA opens.

Which ONE (1) of the following would be indicative of a normal and expected response by the Turbine Driven CA Pump?

A. Unit 2 Turbine Driven CA Pump RPM at 3600.

B. 2SA-48ABC position status light RED and 2SA-49AB position status light GREEN.

C. No Steam Pressure indicated on 2SA-PT5000 (Steam to FWPT Pressure).

D. 2AD-5/F-3, "CA Pump Turbine Stop Valve NOT Open," – ILLUMINATED.

Proposed Answer: **A**

Explanation (Optional):

The TD CAP will auto start on the blackout (CF-CA, p 15, Rev 39)

A. Correct. According to OP-MC-CF-CA (Section 2.6, p29, Rev 39) the Unit 2 CA TD operates at 3600 RPM.

B. Incorrect. According to OP-MC-CF-CA (Section 2.4, p23, Rev 39) the two Steam admission valves will open independent of the other only on a loss of

power to a valves solenoid. In this case, an actual start signal exists which will open BOTH valves.

C. Incorrect. Figure 7.7 of OP-MC-CF-CA (p73 Rev 39) shows that 2SA-PT5000 monitors Steam Pressure downstream of 2SA-48/49 and upstream of the 2CA TD Stop Valve. With both 2SA-48/49 open steam pressure to the Turbine will be indicated.

D. Incorrect. This annunciator will alarm when the 2CA TD receives a start signal and the Stop Valve is NOT Open indicating an overspeed condition. If operating normally as expected the annunciator will be DARK.

Technical Reference(s)	OP-MC-CF-CA p23, 29, 73 Rev 39	(Attach if not previously provided)
	ARP for 2AD-5/F-3 Rev 30	(Including version or revision #)

Proposed references to be provided to applicants during examination: NA

Learning Objective: CF-CA #4 and 7 (As available)

Question Source:	Bank #		
	Modified Bank #		(Note changes or attach parent)
	New	X	

Question History: Last NRC Exam NA

Question Cognitive Level:	Memory or Fundamental Knowledge	
	Comprehension or Analysis	X

10 CFR Part 55 Content:	55.41	7
	55.43	

Comments:
KA is matched because item evaluates AFW Pump turbine status during an electrical failure

Objective # 6

An Auto-Start Defeat Switch can be used to defeat

- **2/4 low-low level in any SG**
- **Trip of both Main Feedwater pumps**
- **AMSAC (Both Main Feedwater Pumps Tripped)**

NC System pressure must be below the P-11 setpoint (1955 psig) to enable the Auto-Start Defeat feature. The Auto-Start Defeat feature will "auto unblock" when pressure returns above the P-11 setpoint.

Objective # 10

The train related RN pump will automatically start upon any start (including Manual) of the corresponding CA pump to provide necessary cooling to the CA pump motor.

2.2 Turbine Driven CA Pump

Objective # 7, 8

Each unit has one Steam Turbine Driven CA pump. **The turbine receives steam from "B" and "C" steamlines through two redundant valves. The turbine driven pump has a design flow rate of 900 gpm** and supplies all four steam generators. **Steam is admitted to the turbine through two piston operated isolation valves, SA-48ABC and SA-49AB.** See section 2.4 for additional information on these valves.

Objective # 4

Refer to Figure 7.12. **The auto-start signals for the CA Turbine Driven pump (which open SA-48ABC and SA-49AB) are:**

- **2/4 detectors low-low level in any two SGs (17%)**
- **Blackout (> 8 seconds)**
- **1/1 detector from SSF SG Wide Range Low-Low Level on 2/4 SGs (72%) (only opens SA-48ABC)**

NOTE: If a Blackout occurs first followed by a Safety Injection, the Sequencer will reset the start signal to the Turbine Driven CA Pump. If the Turbine Driven CA Pump is running at the time of the Safety Injection, it will continue to run. If the Safety Injection occurs first or coincident with the Blackout, the Safety Injection will BLOCK the Turbine Driven CA Pump start because the sequencer selects the Priority Mode. (This does not affect the Low-Low SG Level auto start signal or the SSF Low-Low Level start signal.)

NOTE: The turbine driven pump will also start on loss of VI to the actuator or loss of power to the solenoid valves, due to the fail-open design of the valves (not considered an ESF actuation.)

The bearing oil of the TD CA Pump is cooled utilizing a small heat exchanger at the pump. The cooling medium is the fluid moving through the pump (CA system water).

2.6 Turbine Governor Valve (GV)

Refer to Figure 7.10, 7.11. Speed adjustment of the governor is accomplished by controlling the position of three pistons: (1) the speed setting pilot valve plunger, (2) the speed setting servo piston, and (3) the power cylinder piston. Adjusting the Woodward Speed Setting knob (Manual Speed Adjusting knob) will position the pilot valve plunger to put more oil to (or vent oil from) the speed setting servo piston. The servo piston, working against spring pressure, will travel downward (upward) and open a port to admit more oil pressure to (or vent oil pressure from) the power cylinder piston, which is also working against spring pressure. The power cylinder piston will travel upward (downward) allowing increased (decreased) steam flow and speed of the CA turbine and Turbine Driven CA pump.

A combination of levers, springs, buffer piston, and flyweights provide a feedback mechanism to allow the turbine to settle in at the new speed setting by "closing off" the oil ports that were originally opened to initiate the speed change.

Prior to turbine operation, the governor oil level should be visible near the top of the sightglass. When the Turbine Driven CA pump is in operation, level should be visible in the sightglass.

The turbine driven pump is rated at 3600 rpm but the Unit 1 turbine/pump's governor was modified to operate at 3500 rpm by minor mod MGMM-12950. This mod was performed due to high resonant vibration on the outboard pump bearing due to the installation of a new pump recirculation valve. In addition, a valve was added to the governor to automatically dump the control oil pressure as soon as the turbine is shutdown.

2.7 Auxiliary Feedwater Automatic Recirculation Valves

Objective # 5

The **Auxiliary Feedwater (CA) Automatic Recirculation Valves (ARV),** CA22, CA26 and CA31, **provide an assured minimum pump flow path. These valves are self-modulating, 3-way valves that function without instrument air or electrical power.** These valves are capable of functioning during all fire related events.

The ARV operates as a combined check valve and globe valve with the globe valve port providing an assured flow path to prevent deadheading conditions on the pump. The Check valve port is the main discharge flow path and is operated in the same manner as the previous discharge check valve. **The ARV valve is designed such that the globe port closes as the check port opens assuring a continuous discharge path for the pump** and automatically eliminating recirculation flow as sufficient normal discharge flow is established. This flowpath ensures that either the normal discharge flowpath or the recirculation flowpath is always available.

To prevent potential air entrainment in the RN Train A assured makeup to CA, RN-to-CA flow must be restricted to less than RN-to-KDHX flow. This requires that either CA-86A or RN-69A be closed with the associated power supply opened on both units. Determination of which valve to use should be based on the following:

- **Closing and de-energizing CA-86A blocks the "A" assured suction to the TDCAP. This makes the TDCAP available, but inoperable due to single failure concerns. IF an RN Train or a MDCAP is inoperable, CA-86A cannot be closed and de-energized as this would make two CA pumps inoperable.**

- **Closing and de-energizing RN-69A blocks the "A" assured suction to both the "A" MDCAP and TDCAP. This option will make the "A" MDCAP inoperable. The TDCAP will remain operable, as single failure criteria is no longer applicable.**

These actions are directed in the RN operating procedure (OP/1(2)/A/6400/006). These actions are assuming a single failure to the CA system. If for example you assume this single failure to be the DG in B train, the B train would be unable to supply the TD CA pump and with the A train valve (CA-86A) closed and de-energized, the TD CA pump would be without an assured RN suction supply. More information concerning these required actions can be found in PIP M-02 -02829 and the TAC sheets for 1/2 CA-86A.

The RN and CA TAC sheets address compensatory measures that can be taken to maintain operability of the affected CA Pumps when CA-86A or RN-69A is closed.

This air entrainment problem is not a concern for the "B" Train RN supply due to the difference in piping configuration.

2.4 CA Turbine Steam Supply Valves

Objective # 7

The CA turbine is supplied steam from the B and C steam generators via SA-49AB and SA-48ABC respectively. These piston operated isolation valves fail OPEN on a loss of power to any one of the solenoids, admitting steam to the turbine. On a Manual Start, Low Low Level on 2 S/Gs or Blackout, solenoid valves (SASV-480, 481 and 483) or (SASV-490, 491 and 492) de-energize and block control air to the pilot valve and/or venting the existing air pressure, allowing the pilot valve to block gas pressure (N2 with VI backup) to the actuator and vents the actuator, which allows the actuator spring to open the steam valve which admits steam to the Turbine Driven CA Pump. See drawing 7.8.

7.7 Main Steam Supply to Turbine Driven CA Pump (9/29/97)

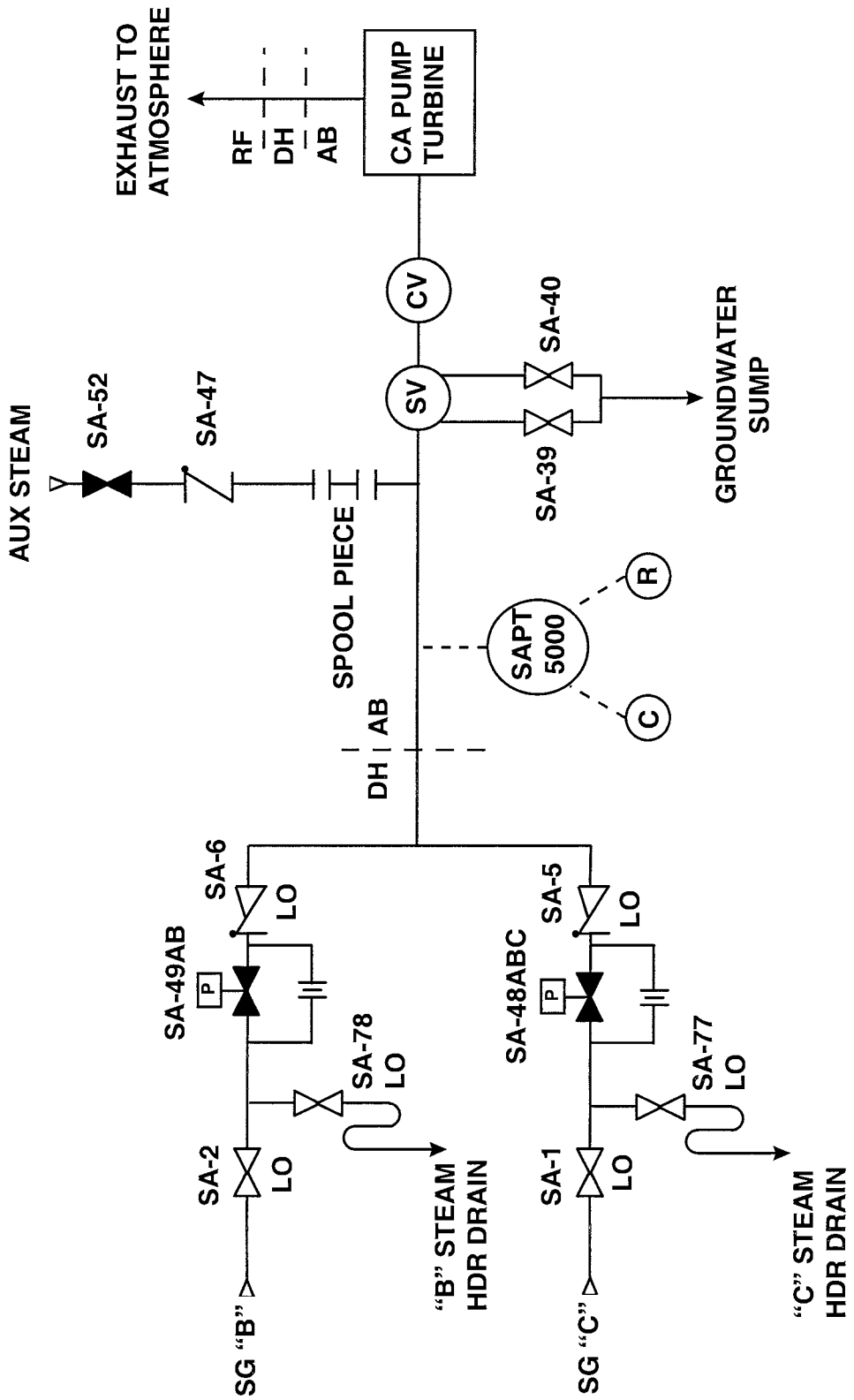

Nomenclature:	TD CA PUMP STOP VLV NOT OPEN	Window:	F3

Setpoint: Valve **NOT** fully open

Origin: Limit switch monitoring valve position (2SALS-5010)

Probable Cause:
- Pump overspeed trip
- Stop valve **NOT** reset

Automatic Action: None

Immediate Action: **IF** necessary, start 2A (2B) CA pumps to maintain S/G level.

Supplementary Action:
1. Send operator to manually open and reset stop valve.
2. Determine cause of overspeed and correct.

References:
- MCEE-247-13
- Equipment Database
- NSM-22126

End of Response

CLASSROOM TIME (Hours)

NLO	NLOR	LPRO	LPSO	LOR
3.0	2.0	3.0	3.0	1.5

OBJECTIVES

	OBJECTIVE	NLO	NLOR	LPRO	LPSO	LOR
1	State the purpose of the CA System.	X	X	X	X	
2	Sketch the system drawing (Fig. 7.1) including all major components and valves, show all tie-ins to associated systems.	X	X	X	X	
3	Describe all CA suction supply sources, including venting requirements and actions.	X	X	X	X	
4	Discuss the auto-start of the motor driven and turbine driven auxiliary feedwater pumps, including concurrent BO/S_S signals and BO followed by S_S.	X	X	X	X	X
5	Describe the CA pump minimum flow and pump runout protection.	X	X	X	X	
6	Describe the function of the Auto Start Defeat Switches; include permissives.	X	X	X	X	X
7	Describe the power supplies and steam supplies for the CA pumps.	X	X	X	X	
8	State the flow rates of the CA pumps.	X	X	X	X	
9	Describe the sources of make-up to the Auxiliary Feedwater Storage Tank, include destination of overflow from the Auxiliary Feedwater Storage Tank.	X	X	X	X	X
10	Describe the interlock between the CA motor driven pump and the associated train RN pump. Include why the interlock is required.	X	X	X	X	X
11	Describe the interlock between the CA pump suction pressure and the RN assured makeup valves.	X	X	X	X	X
12	Describe the interlock between the RN assured makeup valves (CA-15, CA-18) and the DG Hx Inlet Valve. Include why the interlock is required.	X	X	X	X	X

Examination Outline Cross-reference:	Level	RO	SRO
	Tier #	2	
	Group #	1	
	K/A #	039 K4.07	
	Importance Rating	3.4	

(Knowledge of MRSS design feature(s) and/or interlock(s) which provide for the following: Reactor building isolation)

Proposed Question: Common 18

Unit 1 is in Mode 3 conducting a plant depressurization and cooldown in accordance with OP/1/A/6100/SD-2, "Cooldown to 400°F."

The following conditions exist:

- NC System pressure 1900
- NC System temperature 557°F
- All Steam Generator pressures 1100 psig
- Low Pressure SI and Low Pressure Steamline Isolation have been blocked.
- The operator has just begun an 80°F/hour cooldown.

Which ONE (1) of the following conditions would automatically close all four Main Steam Isolation Valves?

A. NC Pressure increases to 2000 psig.

B. Containment Pressure increases to 1 psig.

C. 1A Steam Generator Pressure drops to 900 psig in 2 seconds.

D. 1B Steam Generator drops to 700 psig consistent with NC Cooldown.

Proposed Answer: **C**

Explanation (Optional):

A. Incorrect. If NC Pressure increases to > P-11 (1955 psig), then the Low Steam Pressure SLI will be automatically enabled. However, this action simply enabled the protection circuit (OP-MC-IC-IPE p49 Rev 28), not cause it to function.

B. Incorrect. MSI actuation occurs on 3 psig in Containment, NOT 1 psig. An increase of Containment pressure to 1 psig will actuate Phase A

Containment Isolation.

C. Correct. According to OP-MC-ECC-ISE Section 3.1 (p31 Rev 30), when the Low Press SLI is blocked, the High Steam Line Pressure Negative Rate trip is activated in its place. The setpoint is nominally -100psi/second.

D. Incorrect. Although the B SG has dropped to 700 psig as the NC System has been cooled, and this Steam Pressure is below the Low Steam Pressure SLI setpoint of 775 psig, the procedure has directed the operator block this protection, anticipating that SG Pressure would drop as the NC System is cooled.

Technical Reference(s)	OP/1/A/6100/SD-2 Rev 35	(Attach if not previously provided)
	OP-MC-ECC-ISE p31 rev 30	(Including version or revision #)
	OP-MC-IC-IPE p49 Rev 28	

Proposed references to be provided to applicants during examination: None

Learning Objective: ECC-ISE #5 (As available)

Question Source:	Bank #		
	Modified Bank #		(Note changes or attach parent)
	New	X	

Question History: Last NRC Exam

Question Cognitive Level:	Memory or Fundamental Knowledge	
	Comprehension or Analysis	X

10 CFR Part 55 Content:	55.41	7
	55.43	

Comments:

KA is matched because automatic Main Steam Isolation is tested under abnormal conditions of operation (Lower Mode). MSLI is RB Isolation. (Containment Isolation for Main Steam Lines)

CLASSROOM TIME (Hours)

NLO	NLOR	LPRO	LPSO	LOR
2.5	1.5	1.5	1.5	1.5

OBJECTIVES

	OBJECTIVE	NLO	NLOR	LPRO	LPSO	LOR
1	State the purpose of the Engineered Safeguards System.	X	X	X	X	
2	Explain the need and reasoning behind the redundancy requirements for two trains of safety related systems.	X	X	X	X	
3	State how the operator would be aware if more than one protection cabinet door was opened simultaneously.			X	X	X
4	Define the following terms: S_s , S_t, S_P, S_H	X	X	X	X	
5	List the conditions that will initiate the following: • Safety Injection (S_s) • Phase "A" Isolation (S_t) • Containment Spray/Phase "B" Isolation (S_P) • Containment Ventilation Isolation (S_H) • Main Steam Isolation (MSI) • Main Feedwater Isolation (FWI) • VE (Annulus Ventilation) System Start • H_2 Skimmer and Air Return Fan Start (VX)	X	X			
6	List all Safety Injection (S_s) actuation signals, setpoints, logic, and the type of accident each signal provides protection for.	X	X	X	X	X
7	List the pumps that automatically start following a safety injection actuation.	X	X	X	X	X
8	State which Safety Injection (S_s) signal can be blocked.	X	X	X	X	X
9	Explain the reason for blocking a Safety Injection (S_s) signal.	X	X	X	X	X
10	List the interlock and parameter setpoint that allows blocking Safety Injection (S_s).	X	X	X	X	X
11	Describe the operator action needed to block Safety Injection.			X	X	X
12	List the conditions that allow RESET of Safety Injection.			X	X	X

Objective # 13

A Main Steam Isolation (MSI) signal closes the MSIV's, MSIV bypasses and the PORV's. It can be actuated by any one of the following signals:

Manually		**$^1/_2$ pushbuttons**	
Hi Hi Containment Pressure	**> 3.0 psig**	**$^2/_4$ channels**	
Low Steam Pressure	**< 775 psig**	**$^2/_3$ channels on $^1/_4$ S/G**	**> P-11**
High steamline pressure negative rate	**(-)100 psig/sec**	**$^2/_3$ channels on $^1/_4$ S/G**	**below P-11 if the Lo Press Stm Line Isol is blocked**

If a lower SM depressurization rate is maintained over time, eventually the Main Steam Isolation (MSI) can occur. The 100 psi/sec rate is somewhat of a misnomer. If SM press drops 100 psi in 1 sec, you will get an isolation, but lower rates can also give you an isolation. Here are some examples that will result in a Main Steam Isolation (MSI):

- 100 psi/sec for 1 sec
- 25 psi/sec for approximately 4 seconds
- 8.7 psi/sec for approximately 13 seconds
- 4.3 psi/sec for approximately 30 seconds
- 2.2 psi/sec for approximately 120 seconds
- 2.0 psi/sec for approximately 360 seconds

A steady state Main Steam depressurization rate of less than 2 psi/sec should not result in a Main Steam Isolation (MSI).

NOTE: Some emergency procedures require controlled depressurization of one or more S/G's. The rate of depressurization (psi/sec) can be monitored on the OAC by selecting an individual affected S/G. Use of this information allows the operator to depressurize at a maximum rate while avoiding a Main Steam Isolation.

Main Steam Isolation (MSI) may be reset if initiating signal is cleared or blocked (The Hi Hi Containment pressure is the one initiating signal that can still exist and allow us to reset.) There are two pushbuttons, one for each train.

MSI (Main Steam Isolation) "Reset" permits MSIV operation, allows PORV "Reset" and allows MSIV Bypass "Reset".

NOTE: In order to operate the PORV's or the MSIV bypasses, the MSIV "Resets" must be depressed and then the PORV "Resets" or MSIV Bypass "Resets" must be depressed.

Objective # 11

P-8 (2/4 PR instruments > 48% power) - enables Single Loop Loss of Flow and Reactor Trip upon Turbine Trip.

P-10 (2/4 PR instruments > 10%) - allows Manual Block of PR High Flux / Low Setpoint reactor trip. Allows Manual block of IR High Flux Rod Stop (C-1) and Reactor Trip, blocks Manual reset of SR high voltage and SR reactor trip > P-10. P-10 provides an input to P-7. Below P-10 (3/4 PR instruments < 10%) - allows Manual reset of SR High Voltage and Reactor trip. This is used if one IR channel does not decrease below P-6 to Auto energize the SR circuit.

P-11 (2/3 Presurizer Pressure instruments < 1955 psig) - allows Manual Block of Lo-Pzr pressure SI (Auto instate > P-11); allows Manual block of Lo Press Stm Line Isol (Auto instate > P-11); Allows Manual block of motor driven CA pump Auto-start (Auto instate > P-11); and initiates opening of Cold Leg Accumulator isolation valves when > P-11.

P-12 (2/4 Lo-Lo TAVG < 553°F) - provides Auto-block of steam dumps preventing excessive cooldown by the steam dumps.

P-13 (1/2 Impulse Pressure instruments > 10%) - this turbine at power permissive provides an input to P-7.

P-14 (2/3 Hi-Hi level instruments on 1/4 SGs > 83%) - actuates a Turbine Trip, CFPT Trip and Feedwater Isolation.

3.1.4 Control Interlocks

Objective # 12

C-1 (1/2 IR channels amps > 20%) - blocks Auto and Manual rod withdrawal.

C-2 (1/4 PR channels amps > 103%) - blocks Auto and Manual rod withdrawal.

C-3 (2/4 ΔT channels within 2% of OTΔT setpoint) - blocks Auto and Manual rod withdrawal plus actuates a turbine runback at 200%/min for 2.3 seconds out of 30 seconds.

C-4 (2/4 ΔT channels within 2% of OPΔT setpoint) - blocks Auto and Manual rod withdrawal plus actuates a turbine runback at 200%/min for 2.3 seconds out of 30 seconds.

C-5 (1/1 Impulse Pressure channels < 15%) - blocks Auto rod withdrawal.

C-7A (1/1 Impulse Pressure channel Ch II rate of change decrease > 5%/min or a step change decrease > 10%) - arms condenser dump valves on a load rejection.

NOTE: NC System boron concentration of 2050 ppm (2000 - 2100 ppm) should **NOT** be exceeded until directed by OP/1/A/6100/SD-12 (Cooldown to 100°F).

_____ 3.4 **IF** Crud Burst to be performed, ensure boration of NC System to 2050 ppm in progress per OP/1/A/6150/009 (Boron Concentration Control). {PIP 99-4993}

☐ 3.5 Begin recording NC System parameters per PT/1/A/4600/009 (Surveillance Requirements For Unit Cooldown).

CAUTION:
- "Pzr Lo Press" Safety Injection will occur at 1845 psig unless SI blocks instated.
- Main Steam Line Isolation may occur if indicated SM pressure (via 1SMP5200, chart recorder or OAC) is less than 810 psig, unless SI blocks instated. {PIP 05-1882 CAPR}
- **WHEN** opening Pzr Spray Valves, it is preferred to place Pzr Press Master in "AUTO" and adjust potentiometer. However, care should be taken to prevent opening Pzr PORV. (1NC-34A opens at Pzr Press Master output of 81.2%)

3.6 Reduce NC System pressure to 1905 - 1925 psig by performing the following: {PIP 05-1882 CAPR}

_____ 3.6.1 Ensure Pzr Press Master in "AUTO".

_____ 3.6.2 Adjust potentiometer to maintain the following:

- _____ Pzr Spray Valves 90 - 95% open
- _____ Pzr Press Master output less than 80%

_____ 3.7 **HOLD** until NC System pressure is 1905 - 1925 psig.

☐ 3.8 Maintain NC System pressure 1905 - 1925 psig.

☐ 3.9 Check lit "P-11 Pzr Hi Pressure S/I Block Permissive".

NOTE: Blocking "Steamline Low Pressure" Main Steam Line Isolation signal will arm "Steamline Pressure Rate" Main Steam Line Isolation signal.

3.10 Depress the following:

_____ • "Pzr SI Train A Block"
_____ • "Pzr SI Train B Block"
_____ • "Lo Press Stm Line Isol Trn A Block"
_____ • "Lo Press Stm Line Isol Trn B Block"

3.11 Check lit:

☐ "Pzr Lo Press S/I Train A Blocked"
☐ "Pzr Lo Press S/I Train B Blocked"
☐ "Lo Press Stm Line Isol Train A Blocked"
☐ "Lo Press Stm Line Isol Train B Blocked"

NOTE: **WHEN** using steam dumps to control NC temperature, it is preferred to place "Stm Press Controller" in "AUTO" and adjust potentiometer for desired cooldown rate.

☐ 3.12 Begin cooldown of NC System at less than or equal to 80°F/hr.

CAUTION: **IF** NC pressure increases above P-11 (1955 psig), "Pzr Lo Press" Safety Injection signal and "Steamline Lo Press" Main Steam Line Isolation signal will be automatically reinstated.

NOTE: Exceeding 1955 psig Pzr pressure (P-11) with S/G Steamline Lo Press Bistables lit will result in a Main Steam Line Isolation.

☐ 3.13 Reduce NC System pressure to less than 1850 psig.

☐ 3.14 Maintain NC System pressure within limits of Cooldown Curve.

CAUTION: Pzr level will decrease depending on cooldown rate.

☐ 3.15 Maintain Pzr level.

Examination Outline Cross-reference:	Level	RO	SRO
	Tier #	2	
	Group #	1	
	K/A #	059 A1.03	
	Importance Rating	2.7	

(Ability to predict and/or monitor changes in parameters (to prevent exceeding design limits) associated with operating the MFW controls including: Power level restrictions for operation of MFW pumps and valves.)

Proposed Question: Common 19

The following conditions exist on Unit 1:

- Plant at 41% power.
- AMSAC UNBLOCK Light – LIT
- Power increase in progress.
- A CF Pump running.
- CF Main Control valves at 24% open.

Which ONE (1) of the following will result in an AMSAC actuation?

A. C SG controlling Steam Flow channel fails low.

B. Power level is raised to 55% prior to starting B CF Pump.

C. CF Control Valve bypasses are throttled in the closed direction.

D. Closure of D SG CF Containment Isolation valve.

Proposed Answer: **C**

Explanation (Optional):

AMSAC will actuate under two conditions, Both CF Pumps trip or the loss of CF flow path logic circuit is actuated. The loss of CF flow logic circuit requires indications of loss of flow in 3 of 4 SG, and the protection can be blocked, while the CF Pump trip actuation functions at all times.

A. Incorrect. If a controlling channel fails low, then feed flow will also lower, but only 1 SG will exhibit a low level. AMSAC requires 3 of 4.

B. Incorrect. While this action would violate procedure and strain the ability of the CF System to feed the SGs, it will NOT actuate AMSAC.

C. Correct. The throttling of the Bypass valves to less than full open will cause AMSAC to actuate because the Control Valves are < 25% open with power

>40%.

D. Incorrect. The closing of the D CF CIV will interrupt flow to only one SG, and AMSAC actuation requires flow to be impacted in 3 of 4.

Technical Reference(s): OP-MC-CF-CF p33, 41, and 43 Rev 32 (Attach if not previously provided) (Including version or revision #)

Proposed references to be provided to applicants during examination: None

Learning Objective: CF-CF #14, 16 (As available)

Question Source:
Bank # _____
Modified Bank # _____ (Note changes or attach parent)
New X

Question History: Last NRC Exam NA

Question Cognitive Level:
Memory or Fundamental Knowledge _____
Comprehension or Analysis X

10 CFR Part 55 Content:
55.41 4, 7
55.43 _____

Comments:
KA is matched because item evaluates knowledge of operation of FRV bypass valves at power levels above 40%, as well as operation of AMSAC at power levels above 40%. IF FRV Bypass valves are throttled closed, SG levels will drop and AMSAC will actuate

CF Flow transmitter fails low : Due to CF Flow indicating less than SM flow the Flow Error causes the CF Control Valves to open . S/G level will increase toward the (P14) setpoint where a Turbine/Reactor trip occurs.

CF Flow transmitter fails high: Due to CF Flow indicating greater than SM flow the Flow Error causes the CF Control Valves to throttle closed. S/G level will decrease and approach the Lo Lo Level Reactor Trip setpoint .

Steam Flow transmitter fails low : Due to SM flow indicating less than CF flow, the resulting flow error will close the CF Control valve. S/G Level will decrease toward the Lo Lo Level Reactor trip Setpoint

Steam Flow transmitter fails high : Due to SM flow indicating greater than CF flow, the Flow Error causes the CF Control Valves to open . S/G level will increase toward the (P14) setpoint where a Turbine/Reactor trip occurs.

Steam Pressure transmitter fails low: Since the SM Pressure signal is used to density compensate the SM Flow, the effect will be the same as a Steam Flow transmitter failing low.

Steam Pressure transmitter fails high: the effect will be the same as a Steam Flow transmitter failing high.

S/G N/R Level transmitter fails low: Due to indicated level less than program , the Level Error causes the CF Control Valve to open . S/G level will increase toward the (P14) setpoint where a Turbine/Reactor trip occurs.

S/G N/R Level transmitter fails high: Due to indicated level greater than Program , the resulting Level Error will close the CF Control Valve. S/G Level will decrease toward the Lo Lo Level Reactor trip Setpoint .

For a faulty input channel, select MAN on the Valve controller and maintain level. Swap faulty channels using the '1A (B,C,D) S/G STM FLOW RECORDER CHANNEL SELECT' switch the '1A (B,C,D) S/G CF FLOW RECORDER SELECT' switch or the "1A (BCD) S/G N/R LEVEL RECORDER SELECT" switch, as appropriate. After verifying the recorder for the affected instrument returns to the value of the selected channel, return the S/G CF Control Valve controller to AUTO and verify proper operation.

3.2.3. Controller Malfunction:

A malfunction of the redundant portion of the controller such as a driver card or E/P converter would cause the CF Control valve to open or close without a change in the level or flow error. The operator response would be to place the affected controller in manual and attempt to control level. If manual control was not effective the redundant channel would be selected by placing the CONTROL VALVE SELECTOR Switch to ALT.

2.11 ATWS Mitigation System Actuation Circuitry (AMSAC)

Objective #15

The purpose of this circuit is to:

- **Prevent NCS overpressurization during a loss of main feedwater accompanied by an Anticipated Trip Without a Scram (ATWS).**
- **Trip the Main Turbine and start both motor driven CA pumps if a loss of main feedwater occurs or is anticipated.**

Objective #16, 17, 18, 19, 20, 21

The AMSAC circuit monitors conditions that are indicative of an ATWS event as required by 10CFR50.62. An AMSAC actuation decreases the severity of an ATWS event by minimizing the peak pressure in the NC System.

When actuated, AMSAC will:

- **Trip the Main Turbine**
- **Start both motor driven CA pumps**
- **Light the AMSAC Turb Trip Annunciator (1AD1-B1)**

The AMSAC circuit can be divided into three sections:

- Loss of both CF pumps logic
- Loss of CF flow path to the S/Gs logic
- Block/Unblock logic

The loss of both CF pump logic for AMSAC uses six pressure switches (three for each CF pump) which monitor each pump's control oil pressure (refer to Drawing 7.13).

> Note: The loss of both CF pumps logic for AMSAC is different than the normal scheme that senses loss of both CF pumps. The normal scheme only uses two (2) pressure switch per pump (1LPPS5180 and 1LPPS5184 for "A" CF pump and 1LPPS5190 and 1LPPS5194 for "B" CP pump).

Control oil pressure is used to hold the CF pump turbine stop valves open. If 2 out of 3 pressure switches on the same CF pump turbine sense a loss of oil pressure (setpoint < 45 psig) a signal will be sent to AMSAC. If both CF pumps lose control oil pressure, AMSAC will be actuated on a loss of both CF pumps. The loss of both CF pump AMSAC actuation can not be blocked. A selector switch at each CF pump local control panel provides a means for defeating each pressure switch (one at a time) for testing.

The loss of CF flow path logic looks at the CF containment isolation valves, S/G CF control valves (main control valves and bypass valves), and combinations of these which could result in a loss of CF flow to the S/Gs. (refer to Drawing 7.14)

- When a CF containment isolation valve goes fully closed a signal is sent to AMSAC. If 3 out of 4 CF containment isolation valves close, AMSAC will actuate (if unblocked).
- A CF main feed regulating valve (FRV) must be at least 25% open if its associated bypass valve is not fully open in order for AMSAC to consider the flow path viable. Each S/G has a status light "AMSAC S/G A(B)(C)(D) Low Flow" on 1SI4-A4(B4)(C4)(D4) to warn the operator of the condition of the flow path for that S/G. If the flow path for one S/G does not meet these criteria for 30 seconds, a status light "Any CF S/G path closed > 30 sec" on 1SI4-D3 will warn the operator. If 3 out of 4 flow paths are not viable for 30 seconds, AMSAC will actuate. The 30 second time delay allows operator action or for the transients to stabilize. Annunciator "3 of 4 CF S/G Paths Closed > 30 sec" on 1AD4, F5 indicates that AMSAC will be actuating (assuming it is not blocked).
- Any combination of containment isolation valve closure or CF main FRV closure from 3 out of 4 S/G flow paths will actuate AMSAC.

During normal plant load reduction/plant shutdown, CF flow requirements will be so low that the "Loss of CF flow Path Logic" (i.e. CF bypass valve fully open with CF control valve greater than 25% open) will not be satisfied. Under these controlled evolutions, AMSAC protection is not required, therefore the Block/Unblock logic provides an auto block of AMSAC when turbine impulse pressure decreases below or equal to 260 psig (± 3 psi) for greater than 2 minutes. As power is increased, this circuit will automatically re-instate the protection above 290 psig turbine impulse pressure. When the AMSAC circuit is active (unblocked), the white UNBLOCKED light will be lit (see figure below). The Block/Unblock logic only applies to the Loss of CF Flow path logic. The loss of both CF pumps logic is always active. When tripping the last CF pump during plant shutdown, the operator can depress the CA motor driven pump auto start defeat switch to prevent the auto start of the CA pumps.

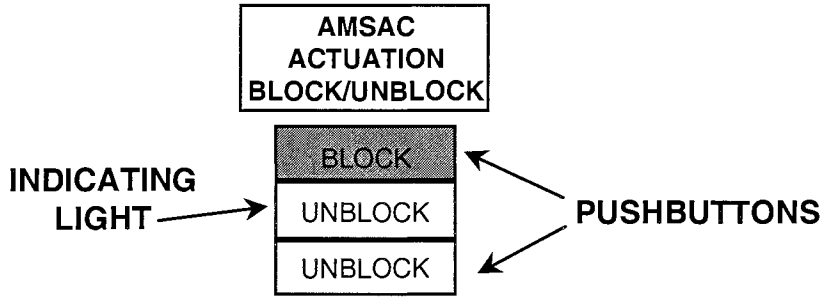

Depressing the AMSAC "UNBLOCK" pushbutton allows the operator to arm AMSAC for the control valve logic when only one pressure switch indicates greater than 290 psig (one pressure switch could have failed low).

CLASSROOM TIME (Hours)

NLO	NLOR	LPRO	LPSO	LOR
NA	2	2	2	2

OBJECTIVES

	OBJECTIVE	NLO	NLOR	LPRO	LPSO	LOR
1.	State the purpose of the S/G Level Control System.		X	X	X	
2.	Draw the S/G Level Control System per training handout MC-CF-IFE-5.		X	X	X	
3.	Draw the S/G Level Program per training handout MC-CF-IFE-4and label all axis.		X	X	X	
4.	Explain the phenomenon of S/G level shrink and swell.		X	X	X	
5.	Explain the reasons for S/G minimum and maximum water levels, including how this relates to S/G programmed level.		X	X	X	X
6.	Discuss the input signals to the S/G level error, FF-SF mismatch, and the Nuclear Power controlling circuit.		X	X	X	X
7.	Describe the operation of the valves controlled by S/G Level Control System.		X	X	X	X
8.	Evaluate plant parameters and status indicators to determine any abnormal system conditions that may exist.			X	X	X
9.	Describe the protection (signals and setpoints) associated with S/G level. (logic not required)		X	X	X	X
10.	Describe the controls and indications associated with the S/G Level Control System.		X	X	X	X
11.	For any S/G Level Control System input signal failure, determine the effect and evaluate operator action to be taken.			X	X	X

SEQ	OBJECTIVE	NLO	NLOR	LPRO	LPSO	LOR
11	Explain why and how CF flow is transferred from the CF nozzle to the CA nozzle and vise versa.	X	X	X	X	
12	Explain the Feedwater Isolation actuation circuit.	X	X	X	X	X
13	List the CF valves that isolate on a Feedwater Isolation Signal.	X	X	X	X	X
14	Describe the automatic actions that occurs on: • Hi Hi Doghouse Level • Hi Hi S/G Level (P-14).	X	X	X	X	X
15	Explain the purpose of the "Anticipated Transient Without Scram Mitigation System Actuation Circuitry" (AMSAC).	X	X	X	X	X
16	Concerning AMSAC: • State the automatic action that occurs as a result of an AMSAC signal • List the parameters that will actuate the AMSAC automatic actions • Discuss the development of the actuation signals, to include the components monitored and setpoints.	X	X	X	X	X
17	Concerning the AMSAC Block/Unblock switch: • State the purpose of each position (Block and Unblock) • State when each position may be used. • Differentiate between the "Manual" block function and "Auto" block functions (include the 2 minute time delay for auto blocking).	X	X	X	X	X

Examination Outline Cross-reference:	Level	RO	SRO
	Tier #	2	
	Group #	1	
	K/A #	061 K3.01	
	Importance Rating	4.4	

(Knowledge of the effect that a loss or malfunction of the AFW will have on the following: RCS)

Proposed Question: Common 20

Unit 1 is operating at 100% power.

After an automatic start of the 1TD CA Pump, a malfunction has occurred which has limited its flow to 300 gpm.

Which ONE (1) of the following identifies the event in which this malfunction will result in a loss of core cooling? (Assuming no mitigation actions are taken by the operator,)

A. Total Loss of All AC Power.

B. Large Break LOCA

C. Both CF Pumps simultaneously trip.

D. All NCPs Trip.

Proposed Answer: **A**

Explanation (Optional):

A. Correct. According to EP-ECA (P29 Rev 12) if CA Flow of at least 450 gpm cannot be maintained, a Secondary Heat Sink cannot be maintained (resulting in NC System heat up). In this event there is no possibility of any additional CA flow because the other pumps have no power.

B. Incorrect. According to EP-FRH (p27 Rev 10) the S/Gs are not needed as a heat sink after a LB LOCA

C. Incorrect. According to Section 2.1 of OP-MC-CF-CA (p13 Rev 39) both MD CA Pumps will start when the two CF Pumps trip. Heat Sink will be maintained.

D. Incorrect. According to Section 2.1 of OP-MC-CF-CA (p13 Rev 39) both MD CA Pumps will start when SG level drops to 17%. This will occur on the Rx Trip associated with a loss of flow. Heat Sink will be maintained.

Technical Reference(s): OP-MC-CF-CA (p13 Rev 39) (Attach if not previously provided)
EP-ECA p29 Rev 12 (Including version or revision #)
EP-FRH p27 Rev 10

Proposed references to be provided to applicants during examination: None

Learning Objective: EP-ECA #4 (As available)

Question Source: Bank # ____
Modified Bank # ____ (Note changes or attach parent)
New X

Question History: Last NRC Exam NA

Question Cognitive Level: Memory or Fundamental Knowledge ____
Comprehension or Analysis X

10 CFR Part 55 Content: 55.41 4, 7, 10
55.43 ____

Comments:
KA is matched because item evaluates conditions in which AFW system is not meeting design requirements. The candidate must determine which condition will potentially cause core uncovery

STEP 7 Check total CA flow - GREATER THAN 450 GPM.

PURPOSE: To ensure CA flow to the S/Gs.

BASIS: Following loss of all AC power, the steam supply valves to the TD CA pump should automatically open and the pump should start to supply CA to the S/Gs. All CA valves should be in or should fail to their proper emergency positions to support TD CA pump operation.

This step checks proper automatic response of the CA System by ensuring CA flow to the S/Gs is equal to the minimum safeguards CA flow requirement for heat removal of 450 GPM. This flow is sufficient to insure an effective secondary heat sink can be maintained.

ACTION/EXPECTED RESPONSE	RESPONSE NOT OBTAINED

C. Operator Actions

__ 1. **IF total feed flow is less than 450 GPM due to operator action, THEN RETURN TO procedure and step in effect.**

CAUTION **If a non-faulted S/G is available, then feed flow should only be established to non-faulted S/G(s) in subsequent steps.**

2. **Check if secondary heat sink is required:**

__ a. NC pressure - GREATER THAN ANY NON-FAULTED S/G PRESSURE.	__ a. **RETURN TO** procedure and step in effect.
__ b. Any NC T-Hot - GREATER THAN 350°F (347°F ACC).	b. Perform the following while continuing in this procedure: 1) Try to place ND in RHR mode: __ a) Ensure NC pressure is less than 385 PSIG. __ b) **IF** S/I has occurred, **THEN** place ND in RHR mode **PER** EP/1/A/5000/G-2 (Placing ND In RHR Mode). __ c) **IF** S/I has not occurred, **THEN** place ND in RHR mode **PER** Enclosure 2 (Placing ND in RHR mode). __ 2) **WHEN** adequate ND cooling is established, **THEN RETURN TO** procedure and step in effect.

__ 3. **Monitor Foldout Page.**

CAUTION If a non-faulted S/G is available, then feed flow should only be established to non-faulted S/Gs in subsequent steps.

PURPOSE: To alert the operator to not reestablish feed flow to a faulted S/G if an intact or ruptured S/G is available to receive the feed flow.

BASIS: Reestablishment of feed flow to a S/G may result in thermal or mechanical shocks to the S/G tubes that could result in tube leakage or tube rupture. If feed flow is reestablished to a faulted S/G and tube leakage resulted, control of the leakage would not be possible until the S/G secondary boundary was restored. Flow restoration to a non-faulted S/G will provide an effective and controllable secondary heat sink.

STEP 2 Check if a secondary heat sink is required:

PURPOSE: To check if a secondary heat sink is required for heat removal.

BASIS: Before implementing actions to restore flow to the S/Gs, the operator should check if secondary heat sink is required. For larger LOCA break sizes, the NC system will depressurize below the intact S/G pressures. The S/Gs no longer function as a heat sink and the core decay heat is removed by the break flow. For this range of LOCA break sizes, the secondary heat sink is not required and actions to restore secondary heat sink are not necessary. For these cases, the operator returns to the procedure and step in effect.

Since Step 19 directs the operator to return to Step 1 if the loss of secondary heat sink parameters are not exceeded, break sizes that take longer to depressurize the NC system will be detected on subsequent passes through Step 1.

If NC system temperature is low enough to place the ND system in service in RHR mode, then the ND system is an alternate heat sink to the secondary system. Therefore, an attempt is made to place the ND system in service (Enclosure 2, Placing ND In RHR Mode) in parallel to the attempts to reestablish feedwater flow. NC system pressure must be below normal ND system pressure limits. When adequate ND cooling is established, then the operator is directed to return to the procedure and step in effect.

Generic Enclosure G-2 (Placing ND in RHR Mode) contains guidance to align one, or both trains, of ND in RHR Mode; leaving one, or no train, available for auto swap to sump; or leaving one train on sump and one train in RHR mode.

The decision for alignment will be made with concurrence/guidance from TSC, if available.

1.0 INTRODUCTION

1.1 Purpose

Objective # 1

The auxiliary feedwater system is provided as a backup for the main feedwater system. **It is designed as a means to dissipate heat from the Reactor Coolant System when normal systems are not available. The auxiliary feedwater system may also be used in normal plant startup and shutdown, as main feedwater, when the flow is less than 3% maximum design feedwater flow.**

1.2 General Description

Objective # 2

Refer to Figure 7.1, 7.2, 7.3, 7.13. The CA system assures required feedwater flow to the steam generators for reactor coolant thermal energy dissipation when the CF system is not available through loss of power or other malfunctions. The CA system is required to operate until normal feedwater flow is restored or until the reactor coolant temperature is lowered to the point where the ND system can be utilized. The CA system is designed to start automatically for any event requiring emergency feedwater. Since the CA system is the only source of makeup water to the steam generators for reactor coolant heat removal when the main feedwater system becomes inoperable, it has been designed with redundancy and diversity. The CA system contains two motor driven pumps and one steam turbine driven pump for each unit.

2.0 COMPONENT DESCRIPTION

2.1 Motor Driven CA Pumps

Objective # 4, 7, 8

The motor driven CA pumps are powered from essential power, ETA (pump A) and ETB (pump B). Each motor driven pump has a design flow rate of 450 gpm and is capable of supplying two steam generators. CA pump "A" supplies steam generators "A" and "B" while CA pump "B" supplies steam generators "C" and "D."

Refer to Figure 7.12. **The auto-start signals for the CA Motor Driven pumps are:**

- **2/4 detectors low-low level in any one SG (17%)**
- **Trip of both Main Feedwater pumps**
- **AMSAC**
    - **Both Feedwater pumps tripped**
    - **Loss of flow to 3/4 SGs**
- **S_S signal**
- **Blackout signal**

CLASSROOM TIME (Hours)

NLO	NLOR	LPRO	LPSO	LOR
		1.5	1.5	1.0

OBJECTIVES

SEQ	OBJECTIVE	NLO	NLOR	LPRO	LPSO	LOR
1	Explain the purpose for each procedure in the ECA-0 series. EPECA001			X	X	
2	Discuss the entry and exit guidance for each procedure in the ECA-0 series. EPECA002			X	X	
3	Discuss the mitigating strategy (major actions) of each procedure in the ECA-0 series. EPECA003			X	X	X
4	Discuss the basis for any note, caution or step for each procedure in the ECA-0 series. EPECA004			X	X	X
5	Describe the immediate actions and include the RNO when appropriate. EPECA005			X	X	X
6	Given the appropriate procedure, evaluate a given scenario describing accident events and plant conditions to determine any required action and its basis. EPECA006			X	X	X
7	Discuss the time critical task(s) associated with the ECA-0 series procedures including the time requirements and the basis for these requirements. EPECA007			X	X	X

Examination Outline Cross-reference:	Level	RO	SRO
	Tier #	2	
	Group #	1	
	K/A #	062 A3.05	
	Importance Rating	3.5	

(Ability to monitor automatic operation of the ac distribution system, including: Safety-related indicators and controls)

Proposed Question: Common 21

The B Train of essential equipment is in operation on Unit 1.

While performing OP/1/A/6350/002 (Diesel Generator) with the 1A Diesel running in parallel to the grid, the following sequence of events occurs:

- Load is reduced on the diesel to 200KW in anticipation of opening the Emergency Breaker.
- The RO accidentally OPENS the Normal Feeder Breaker from 1ATC.

Which ONE (1) of the following describes the system response in this situation?

A. The "Blackout Sequencer Actuated Train A" status light on SI-14 lights **and** the Emergency Breaker trips open, **then** re-closes 8.5 seconds later.

B. The "Blackout Sequencer Actuated Train A" status light on SI-14 remains dark **and** the Emergency Breaker trips open, **then** re-closes 8.5 seconds later.

C. The "Blackout Sequencer Actuated Train A" status light on SI-14 lights **and** 1A DG Load increases.

D. The "Blackout Sequencer Actuated Train A" status light on SI-14 remains dark **and** 1A DG Load increases.

Proposed Answer: **D**

Explanation (Optional):

A. Incorrect. Section 3.3 of OP-MC-DG-EQB states that If 2/3 LOV Relays sense a loss of voltage on their associated 4160V bus, the blackout relay will pick up and actuate a D/G start. If the UV condition still exists after 8.5 seconds, the blackout logic is sealed in. However, with the Emergency

Breaker closed, there is NO loss of voltage on 1ETA.

B. Incorrect. While it is true that the BO signal will not exist, the Diesel Breaker will NOT trip open (Section 2.7 of OP-MC-DG-DG) on overcurrent with the Essential Bus disconnected from another power source.

C. Incorrect. No BO Relay will operate (see A)

D. Correct. The Emergency Breaker is closed and the Diesel will pick up the remaining load on 1ETA.

Technical Reference(s)	OP-MC-DG-EQB pages 17, 23, 3	(Attach if not previously provided)
	OP-MC-DG-DG page 35, Rev 25	(Including version or revision #)

Proposed references to be provided to applicants during examination: None

Learning Objective: DG-EQB #5 (As available)

Question Source:	Bank #		
	Modified Bank #	McGuire NRC Bank # 187	(Note changes or attach parent)
	New		

Question History: Last NRC Exam NA

Question Cognitive Level:	Memory or Fundamental Knowledge	
	Comprehension or Analysis	X

10 CFR Part 55 Content:	55.41	7
	55.43	

Comments:
KA is matched because Sequencer indication (status light) is evaluated for a condition where AC Power is interrupted

The B Train of essential equipment is in operation on Unit 1.

While performing OP/1/A/6350/002 (Diesel Generator) with the 1A Diesel running in parallel to the grid, the following sequence of events occurs:

Load is reduced on the diesel to 200KW in anticipation of opening the EMERGENCY breaker.
The RO accidentally OPENS the normal feeder breaker from 1ATC.
Train 1B is the protected train

Which ONE (1) of the following describes the system response and the proper procedural response to deal with this situation?

A. Degraded voltage is sensed on 1ETA and the BLACKOUT sequencer actuates, the crew will use AP/1/5500/07(Loss of Electrical Power).
B. The Diesel Generator Sequencer does not actuate, and the diesel generator assumes the load of the bus. The operator uses OP/1/A/6350/002 to return to normal alignment.
C. Undervoltage is sensed on 1ETA and the BLACKOUT sequencer actuates, the crew will use AP/1/5500/07.
D. The Diesel Generator BLACKOUT sequencer recloses the breaker from 1ATC. Crew reloads the bus using AP/1/A/5500/07, Enclosure 1 (Manual Loading of Emergency Bus).

Should a Safety Injection signal occur at any time after the first time delay relay completes its cycle, the circuit will automatically initiate separation from the offsite power source and transfer to the emergency diesel generators.

Protection for a severe diesel-generator overload accompanied by a system voltage dip caused by events such as a Loss of Off-Site Power (LOOP) with the Diesel Generator operating in parallel with the grid is provided by the voltage-controlled overcurrent relay (51V). This relay consists of three single phase relays (51VX, 51VY, and 51VZ). The operation of any one of these phase relays will activate an annunciator alarm in the control room (AD-11, A-4 (D-4), D/G A (B) Overcurrent) to warn the operator of an overload condition (800 amps @ 3360 volts). Operation of any two of these overcurrent relays will result in operation of the diesel-generator lockout relay (86D). Diesel-generator lockout relay (86D) will trip and lockout the diesel-generator switchgear breaker and initiate a shutdown of the diesel-generator. This lockout must be reset by hand before the breaker can be reclosed.

3.3 Sequencer operation during a Blackout

Objective # 5

Sequencer operation during a Blackout with no safety injection signal and the under-voltage is not due to fault relay 86N, 86S or 86B.

If 2/3 LOV Relays sense a loss of voltage on their associated 4160V bus, the blackout relay will pick up and actuate a D/G start. If the UV condition still exists after 8.5 seconds, the blackout logic is sealed in. All 4160V breakers on the bus are then tripped open. When D/G speed is ≥ 95%, the output breaker will close. When bus voltage is ≥ 92.5% and D/G speed is ≥ 97%, the accelerated sequence is enabled. Blackout loads will be sequentially applied at intervals of approximately 2 seconds, as long as bus voltage remains ≥ 92.5% and frequency remains > 58.2 Hz. Complete loading of all blackout loads, via the accelerated sequence, could be done in as little as 25 seconds. If during the sequencing of blackout loads the Sequencer RESET pushbuttons are depressed, no additional sequencing will occur. This is because once the RESET pushbuttons are depressed, the blackout signal is removed and since there is power on the 4160V bus a blackout no longer exists. It would require another blackout signal or manual loading of the bus to complete the sequencing of loads.

Should the Accelerated Sequence Relay scheme fail to work, the Committed Sequence would be actuated approximately 10 seconds after the diesel receives its blackout start signal if load shed of the bus has been completed. The committed sequence may take up to 12 minutes to load all blackout loads. The committed sequence does not require any minimum voltage or minimum frequency to allow it to progress as does the Accelerated Sequence. The Committed Sequence is required by Technical Specifications.

Objective # 13

2.7 Diesel Generator Relaying (see drawing 7.17)

The primary protection for phase-to-phase faults on the diesel-generator and circuit breaker is provided by the generator differential relay (87G).

This relay receives current from the current transformers located on the neutral-side of the diesel-generator windings and from the current transformers located on the bus-side of the generator's switchgear breaker.

A phase fault on the diesel-generator, it's output circuit, or circuit breaker will be detected by the differential relay (87G) and operate the diesel-generator lockout relay (86D).

Diesel-generator lockout relay (86D) will trip and lockout the diesel-generator switchgear breaker and initiate a shutdown of the diesel-generator. This lockout must be reset by hand before the breaker can be reclosed.

Protection for a severe diesel-generator overload accompanied by a system voltage dip is provided by the voltage-controlled overcurrent relay **(51V).** This relay consists of three single phase relays (51VX, 51VY, and 51VZ). **The operation of any one of these phase relays will activate an annunciator alarm in the control room (AD-11, A-4 (D-4), D/G A (B) Overcurrent) to warn the operator of an overload condition (800 amps @ 3360 volts). Operation of any two of these overcurrent relays will result in operation of the diesel-generator lockout relay (86D). Diesel-generator lockout relay (86D) will trip and lockout the diesel-generator switchgear breaker and initiate a shutdown of the diesel-generator.** This lockout must be reset by hand before the breaker can be reclosed.

An **instantaneous overcurrent relay (50DGT)** is provided to protect the diesel-generator from an overcurrent condition, caused by a system blackout or fault, while the system and the diesel-generator are paralleled. **The output of relay 50DGT is interlocked with the auxiliary contacts from the normal, standby, and emergency (diesel-generator) breakers, such that, if two breakers are closed (diesel-generator breaker with either the normal or standby breaker), with an instantaneous overcurrent relay (50DGT) actuation the diesel-generator breaker will open (trip) if no SI signal is present. If this overcurrent condition was caused by a system blackout, the diesel-generator sequencer will also trip the incoming breaker (normal or standby, whichever was closed).**

Overcurrent relay 50DGT is energized from the current transformers on the diesel generator switchgear breaker. **With the diesel-generator supplying the essential switchgear loads (separated from the grid), relay 50DGT is not allowed to trip the diesel-generator breaker.**

There are an additional 37 lights on the sequencer panel which are used during testing to monitor the signals sent to the 4160V switchgear and 600V load centers. In addition, these lights verify the status of the contacts after testing and serve as the overlapping requirement for switchgear operation.

Annunciator alarms in Control Room

- "Sequencer A (B) in Test", AD-11, B-1 (E-1)

  This alarm alerts the operator that the sequencer test key switch is in a position other than OFF. The operator has no control of components on the respective bus when this alarm is actuated.
- "Sequencer A (B) Loss of Control Power", AD-11, B-2 (E-2)

  This alarm alerts the operator that the sequencer has lost control power and it will not operate.
- "ETA (ETB) Degraded Voltage", AD-11, L-1 (L-2)

  (< 3689 Volts on ETA (ETB) for 10 seconds (≈88% normal bus voltage)

  1. **IF** a degraded bus voltage condition continues to exist following a 10 second time delay and a Safety injection signal occurs, a separation of offsite power will be initiated immediately (10 minute time delay is bypassed).
  2. **IF** degraded bus voltage condition is not cleared before 10 minute time delay, the bus will be separated from the offsite power supply by the tripping and lockout of 1ETA normal and alternate incoming breakers.
  3. "Loss of voltage" (Blackout) sequencer logic will start as a result of tripping the normal and alternate circuit breaker.

Status indication in Control Room (on SI-14)

- "LOCA Sequencer Actuated Train A or Train B"
- "Blackout Sequencer Actuated Train A or Train B"
- "ETA (ETB) Undervoltage on Phase X, Y or Z
- "ETA (ETB) Degraded Voltage Relays"

Computer Digital Inputs

- Sequencer A (B) Reset complete/not complete
- Sequencer A (B) complete/not complete
- Sequencer A (B) Control Voltage low/normal
- Sequencer A (B) Test Relays actuated/not actuated
- Sequencer A (B) LOCA actuated /not actuated
- Sequencer A (B) Reset actuated/not actuated

There is local indication, a control room annunciator, and a computer point to indicate a loss of control voltage for the 4160-Volt Degraded Voltage Instrumentation

CLASSROOM TIME (Hours)

NLO	NLOR	LPRO	LPSO	LOR
1.0	1.5	1.5	1.5	1.5

OBJECTIVES

	OBJECTIVE	NLO	NLOR	LPRO	LPSO	LOR
1	State the purpose of the Diesel Generator Load Sequencing System.	X	X	X	X	
2	List the Sequencer Automatic Actuation Signals.	X	X	X	X	X
3	List the two Sequencer Modes of Operation and give a brief explanation of each mode.	X	X	X	X	X
4	State which of the Sequencer Modes has priority.	X	X	X	X	X
5	Describe the sequence of events which occur during the Blackout Mode of Sequencer Operation.			X	X	X
6	Describe the sequence of events which occur during the Safety Injection Mode of Sequencer Operation.			X	X	X
7	Describe the sequence of events which occur during a Blackout followed by a Safety Injection.			X	X	X
8	Describe the sequence of events which occur during a Safety Injection Actuation followed by a Blackout. (NOTE: with S_s reset and with S_s not reset).			X	X	X
9	Describe the sequence of events required to be done in order to return the 4.16 KV bus back to normal following a: • Safety Injection • Blackout • Safety Injection followed by a Blackout • Blackout followed by a Safety Injection			X	X	X
10	Given a Limit and/or Precaution associated with an operating procedure, discuss its bases and when the it applies.	X	X	X	X	X

Examination Outline Cross-reference:	Level	RO	SRO
	Tier #	2	
	Group #	1	
	K/A #	063 A1.01	
	Importance Rating	2.5	

(Ability to predict and/or monitor changes in parameters associated with operating the dc electrical system controls including: Battery capacity as it is affected by discharge rate)

Proposed Question: Common 22

McGuire Station has experienced a Loss of Off-site power.

The following conditions exist:

- All essential AC and DC electrical busses are energized.
- DCA and DCB are being powered from Battery CXA and CXB respectively.

The following timeline shows CXA/CXB voltage over the course of the event:

Time after LOOP	CXA	CXB
1 hour	128v	123v
2 hour	124v	116v
3 hour	118v	114 v
4 hour	115v	113 v
5 hour	113v	112 v
6 hour	111v	111v

Assuming the current trends continue, which ONE (1) of the following accurately predicts when the CXA and CXB batteries will be depleted?

A. Battery CXA will be lost in 2 hours, Battery CXB will be lost in 4 hours.

B. Battery CXA will be lost in 2 hours, Battery CXB will be lost in 6 hours.

C. Battery CXA will be lost in 3 hours, Battery CXB will be lost in 4 hours.

D. Battery CXA will be lost in 3 hours, Battery CXB will be lost in 6 hours.

Proposed Answer: **A**

Explanation (Optional):

A. Correct. According to the AP15 Background Document each Battery breaker will open at 107 volts (105 for vital). Also according to AP15 Background document comp measures will be taken at 115 v on both batteries so that life is extended, and that after 115 v the battery voltage will decrease linearly. The timeline for CXA shows that the battery voltage is decreasing a 2v/hr for CXA after 115v, and 1v/hr for CXB after 115v. Therefore, the CXA will decrease to 107 v in 2 hours, and the CXB will decrease to 107 v in 4 hours.
B. Incorrect. The predicted life of CXB is 6 hours which would be true if it were a vital DC Battery.
C. Incorrect. The predicted life of CXA is 3 hours which would be true if it were a vital DC Battery.
D. Incorrect. True if both batteries were vital DC Batteries.

Technical Reference(s): AP15 Background Document p48, Rev 19 (Attach if not previously provided)
(Including version or revision #)

Proposed references to be provided to applicants during examination: None

Learning Objective: EL-EPK #12, 13 (As available)

Question Source: Bank # _____
Modified Bank # _____ (Note changes or attach parent)
New X

Question History: Last NRC Exam NA

Question Cognitive Level: Memory or Fundamental Knowledge _____
Comprehension or Analysis X

10 CFR Part 55 Content: 55.41 4
55.43 _____

Comments:
KA is matched because change in parameters will occur when the battery is depleted. Discharge rate and battery depletion are the key elements of this item

ENCLOSURES:

Unit 1 Encl 1 Response to Degraded DC Bus Voltage:

For the situation where a charger has tripped and the DC Battery is still carrying the bus, the bus voltage will degrade over time. A step in the body of this AP refers the Operator to this enclosure for compensatory actions. The Operator is reminded that under worst case situations, the Vital Batteries will last at least 1 hour, and the Aux Batteries will last at least 4 hours. Depending on which channel is lost and plant conditions, the batteries may last considerably longer. The point at which they're considered lost is when the voltage degrades to the point where the output breaker is opened (107VDC for Aux., 105VDC for Vital), as directed later in this enclosure. An overview of the enclosure is as follows:

First, the enclosure attempts to restore the affected charger to service using the following methods: swap power supplies to charger, check breaker alignment, cross tie to another bus, or use standby charger.

Secondly, the enclosure contains guidance in the event that a charger cannot be started. These actions will be implemented only if bus voltage reaches the undervoltage annunciator setpoint. At 115 volts, the battery still has significant life remaining, but comp measures should be implemented to conserve remaining battery power and prepare for total loss of DC bus. These actions include: (1) swapping the affected bus inverters to alternate source to extend battery life and prevent loss of associated AC bus, (2) reviewing the applicable load list enclosure(s) for the possibility of losing power to the bus, (3) opening the associated battery output breaker once the battery is exhausted. (Note that battery voltage is expected to decrease linearly over time from 115 volts to 105-107 volts, so the operator should be able to estimate when the battery will be exhausted.)

Unit 1 Encl 2 - 5 Restoring Power to Vital DC busses:
Unit 2 Encl 1 - 4

(Note that Unit 2 only attempts to restore power to the Unit 2 panelboard. If the entire distribution center has lost power, Unit 1's AP will address this condition.)

The cautions at the beginning of the enclosure deal with the issue of a tripped breaker. Depending on plant conditions, closing a tripped breaker may be justified prior to visual inspection and troubleshooting. Getting the bus energized quickly to avoid major operational problems versus waiting until it's certain there is no fault on the bus may be worth it from a risk/reward standpoint. Past experience has shown that breakers are capable of tripping more than once to isolate fault conditions. On the other hand, if a fault is known to exist or the breaker is visibly damaged, it would be wise to isolate the fault and repair the breaker prior to energizing the bus, since a high potential for explosion exists upon closure of a degraded circuit (PIP 1-M96-3574). Another caution emphasizes the point of not standing in front of a tripped breaker when re-closing. Although this is a good precaution anytime a breaker is closed, it is especially pertinent in this case, since an unknown fault could cause breaker failure.

First, the enclosure attempts to reclose any tripped open panelboard breaker. If this works, the enclosure is exited. If this isn't the problem, the next steps open the supply breaker to the inverters (they're not running anyway), and evaluate placing the AC bus on KRP per applicable enclosure. Then the bus is energized from its charger or via tiebreakers, whichever is desired. Generally it is preferred to energize a DC bus with its charger instead of tiebreakers, because the tiebreakers don't meet Tech Spec operability requirements and places the system at reduced redundancy. In the step that cross ties busses, opening the Main Incoming Fuse to the Distribution Center could be extremely important because it prevents tying the sister charger to a potentially degraded battery, which could draw an excessive amount of current and trip the running charger and/or result in degraded voltage on sister distribution center as well.

	OBJECTIVE	NLO	NLOR	LPRO	LPSO	LOR
9	Describe any of the Kirk-Key Interlocks associated with the 125 VDC Auxiliary Control Power System and state the purpose of the Kirk-Key arrangement. ELEPK009	X	X	X	X	X
10	Explain how the Standby Battery Charger is used during an equalizing charge of a 125 VDC Battery for the 125VDC Auxiliary Control Power System. ELEPK011	X	X	X	X	X
11	Explain how each battery, associated with the 125 VDC Auxiliary Control Power System, is connected to its associated power system. ELEPK012	X	X	X	X	
12	State the duty-cycle requirements associated with each 125 VDC Battery for the 125VDC Auxiliary Control Power System. ELEPK013	X	X	X	X	
13	State the condition(s) that will cause the battery to assume all of its associated DC Bus loads. ELEPK014	X	X	X	X	X
14	Describe the purpose of the DC Tie Breakers associated with DC Distribution Centers DCA and DCB. ELEPK015	X	X	X	X	
15	Explain how the 125 VDC and the 240/120 VAC Auxiliary Control Power Systems are interconnected. ELEPK016	X	X	X	X	
16	Describe operation of the Automatic Static Transfer Switch associated with the Static Inverters. ELEPK017	X	X	X	X	X
17	Describe operation of the Manual Bypass Switch associated with the Static Inverters. ELEPK018	X	X	X	X	X

Examination Outline Cross-reference:	Level	RO	SRO
	Tier #	2	
	Group #	1	
	K/A #	064 K6.08	
	Importance Rating	3.2	

(Knowledge of the effect of a loss or malfunction of the following will have on the ED/G system: Fuel oil storage tanks)

Proposed Question: Common 23

Given the following conditions on Unit 1:

- The unit is at 100% power
- 1A EDG is in standby.
- A fuel oil leak in 1A EDG Fuel Oil Storage Tank is occurring.
- Fuel Oil Storage Tank volume was 43,600 gallons at the start of the leak.
- When the leak is contained, Fuel Oil Storage Tank level was stabilized with a volume of 30,000 gallons.
- Trend of volume as follows:

1030	39,900 gallons
1100	38,600 gallons
1130	31,200 gallons
1200	30,000 gallons

Of the following choices, which ONE of the following is the EARLIEST time that 1A DG parameters require entry into a technical specification action statement?

A. 1030

B. 1100

C. 1130

D. 1200

Proposed Answer: **B**

Explanation (Optional):

A. Incorrect. EDG fuel oil will still be meeting TS LCO limits because >39,500 gallons is available. Plausible because number is below 40,000.
B. Correct. Below 39,500 gallons, the crew has 48 hours to restore level.
C. Incorrect. Already in an action statement, but plausible because this value is below the value where the EDG will be declared inoperable.
D. Incorrect. This value is below both operability limits, and is plausible because it is a value below the limits. Just not the first value that is below the limits.

Technical Reference(s): TS 3.8.3 Rev 184/166 (Attach if not previously provided)
(Including version or revision #)

Proposed references to be provided to applicants during examination: None

Learning Objective: DG-DG #11 (As available)

Question Source: Bank # ____
Modified Bank # ____ (Note changes or attach parent)
New X

Question History: Last NRC Exam ____

Question Cognitive Level: Memory or Fundamental Knowledge X
Comprehension or Analysis ____

10 CFR Part 55 Content: 55.41 7, 10
55.43 ____

Comments:
KA is matched because malfunction of the Fuel Oil Storage Tank (leak) will result in TS action statement entry, and eventually, unavailability of the EDG

3.8 ELECTRICAL POWER SYSTEMS

3.8.3 Diesel Fuel Oil and Starting Air

LCO 3.8.3 The stored diesel fuel oil and starting air subsystem shall be within limits for each required diesel generator (DG).

APPLICABILITY: When associated DG is required to be OPERABLE.

ACTIONS

----------NOTE----------
Separate Condition entry is allowed for each DG.

CONDITION		REQUIRED ACTION		COMPLETION TIME
A.	One or more DGs with fuel oil inventory < 39,500 gal and > 31,600 gal.	A.1	Restore fuel oil level to within limits.	48 hours
B.	One or more DGs with stored fuel oil total particulates not within limit.	B.1	Restore fuel oil total particulates within limit.	7 days
C.	One or more DGs with new fuel oil properties not within limits.	C.1	Restore stored fuel oil properties to within limits.	30 days

(continued)

ACTIONS (continued)

CONDITION	REQUIRED ACTION	COMPLETION TIME
D. One or more DGs with 1 of 2 starting air receiver pressures < 210 psig.	D.1 Initiate action to isolate the degraded starting air receiver. AND D.2 Restore both starting air receiver pressures to ≥ 210 psig.	Immediately 48 hours
E. Required Action and associated Completion Time not met. OR One or more DGs diesel fuel oil or starting air subsystem not within limits for reasons other than Condition A, B, C, or D.	E.1 Declare associated DG inoperable.	Immediately

SURVEILLANCE REQUIREMENTS

SURVEILLANCE		FREQUENCY
SR 3.8.3.1	Verify the fuel oil storage system contains ≥ 39,500 gal of fuel for each DG.	31 days
SR 3.8.3.2	Verify fuel oil properties of new and stored fuel oil are tested in accordance with, and maintained within the limits of, the Diesel Fuel Oil Testing Program.	In accordance with the Diesel Fuel Oil Testing Program
SR 3.8.3.3	Verify each DG air start receiver pressure is ≥ 210 psig.	31 days
SR 3.8.3.4	Check for and remove accumulated water from the fuel oil storage tank.	31 days

OBJECTIVES

	OBJECTIVE	NLO	NLOR	LPRO	LPSO	LOR
11	Concerning the Technical Specifications related to the Diesel Generator (Tech Specs 3.8.1, 3.8.2, 3.8.3):					
	• Given the LCO title, state what constitutes the LCO and applicability as stated in Tech Spec bases.			X	X	X
	• For any LCO's that have action required within one hour, state the action.			X	X	X
	• Given a set of parameter values or system conditions, determine if any Tech Spec LCO's is (are) not met and any action(s) required within one hour.			X	X	X
	• Given a set of plant parameters or system conditions and the appropriate Tech Specs, determine required actions.			X	X	X
	• Discuss the bases for a given Tech Spec LCO or Safety Limit.				X	*
	***SRO Only**					

Examination Outline Cross-reference:	Level	RO	SRO
	Tier #	2	
	Group #	1	
	K/A #	073 A2.01	
	Importance Rating	2.5	

(Ability to (a) predict the impacts of the following malfunctions or operations on the PRM system; and (b) based on those predictions, use procedures to correct, control, or mitigate the consequences of those malfunctions or operations: Erratic or failed power supply)

Proposed Question: Common 24

With Unit 2 at 100% power, the following conditions exist:

- Train A equipment in operation
- The power supply to 2EMF46A, "Train A Component Cooling," has failed.

Which ONE (1) of the following describes the impact of this event, and what procedure will be used to address the situation?

A. KC-122, "Component Cooling Water Surge Tank Vent," will automatically close, Address Annunciator Response for 2RAD-1/A-4 "2EMF 46A Train A KC Hi Rad."

B. KC-122, "Component Cooling Water Surge Tank Vent," will automatically close, Address AP/2/A/5500/21, "Loss of KC or KC System Leakage."

C. A Main Control Board alarm only will occur, Address Annunciator Response for 2RAD-1/A-4 "2EMF 46A Train A KC Hi Rad."

D. A Main Control Board alarm only will occur, Address OP/2/A/6400/005, "Component Cooling Water System," to swap KC Trains.

Proposed Answer: **A**

Explanation (Optional):

A. Correct. Pg 59 of OP-MC-WE-EMF states that the RP-86A modules are fail-safe and actuate Trip 1 and Trip 2 during a loss of power. The High Rad alarm will sound and lock in until reset (once power comes back). If power is lost to 2EMF-46A, Trip 2 will occur. P33 states that Should a Trip 2 high radiation alarm be received on either 1EMF-46A or 1EMF-46B, the component cooling water surge tank vent 1KC122 is automatically closed to

Examination Outline Cross-reference:	Level	RO	SRO
	Tier #	2	
	Group #	1	
	K/A #	073 A2.01	
	Importance Rating	2.5	

(Ability to (a) predict the impacts of the following malfunctions or operations on the PRM system; and (b) based on those predictions, use procedures to correct, control, or mitigate the consequences of those malfunctions or operations: Erratic or failed power supply)

Proposed Question: Common 24

With Unit 2 at 100% power, the following conditions exist:

- Train A equipment in operation
- The power supply to 2EMF46A, "Train A Component Cooling," has failed.

Which ONE (1) of the following describes the impact of this event, and what procedure will be used to address the situation?

A. KC-122, "Component Cooling Water Surge Tank Vent," will automatically close, Address Annunciator Response for 2RAD-1/A-4 "2EMF 46A Train A KC Hi Rad."

B. KC-122, "Component Cooling Water Surge Tank Vent," will automatically close, Address AP/2/A/5500/21, "Loss of KC or KC System Leakage."

C. A Main Control Board alarm only will occur, Address Annunciator Response for 2RAD-1/A-4 "2EMF 46A Train A KC Hi Rad."

D. A Main Control Board alarm only will occur, Address OP/2/A/6400/005, "Component Cooling Water System," to swap KC Trains.

Proposed Answer: **A**

Explanation (Optional):

A. Correct. Pg 59 of OP-MC-WE-EMF states that the RP-86A modules are fail-safe and actuate Trip 1 and Trip 2 during a loss of power. The High Rad alarm will sound and lock in until reset (once power comes back). If power is lost to 2EMF-46A, Trip 2 will occur. P33 states that Should a Trip 2 high radiation alarm be received on either 1EMF-46A or 1EMF-46B, the

prevent release of volatile fission products. The Annunciator Response is the appropriate procedure to address due to the alarm condition. AP21 does not include High Radiation as an entry condition. The ARP has the operator check for increasing Surge Tank level and if so, directs the Operator to the AP.

B. Incorrect. The impact on the system is correct, however, the AP does not include hi radiation as a symptom. The ARP will direct the operator to the AP if surge tank level increases.

C. Incorrect. Trip 2 will cause the KC Surge Tank Vent to close (More than an alarm).

D. Incorrect. Trip 2 will cause the KC Surge Tank Vent to close (More than an alarm), the ARP will be addressed prior to consideration being given to swapping to the opposite train, if consideration is given at all.

Technical Reference(s): OP-MC-WE-EMF p33, 59 Rev 28 (Attach if not previously provided)
ARP1RAD-1/A-4 Rev 38 (Including version or revision #)
AP21 Rev 7

Proposed references to be provided to applicants during examination: None

Learning Objective: WE-EMF #3, AP-AP21 #3 (As available)

Question Source: Bank # ____
Modified Bank # ____ (Note changes or attach parent)
New X

Question History: Last NRC Exam NA

Question Cognitive Level: Memory or Fundamental Knowledge X
Comprehension or Analysis ____

10 CFR Part 55 Content: 55.41 11
55.43 ____

Comments:
KA is matched because impact is evaluated by asking what will occur, and action

The alarm indications are:

- **Trip 1 - Yellow LED comes on and Trip 1 relay de-energizes when level is greater than or equal to Trip 1 setpoint. As long as the level is greater than or equal to Trip 1 relay pressing [CLR] will have no effect on Trip 1 or the relay. No annunciator alarm will be generated.**
- **Trip 2 - Red LED comes on Trip 2 relay de-energizes when level is greater than or equal to Trip 2 setpoint. [CLR] function works the same as Trip 1. Trip 2 will generate an annunciator alarm for that EMF.**

During normal operation, the green "OPERATE" LED is energized. The "OPERATE" LED will de-energize and a failure relay will de-energize under the following conditions:

- **Operate/Calibrate switch set to calibrate**
- **Loss of High Voltage**
- **Loss of Signal (0 counts over specified time)**
- **Safety Loop Open**
- **Loss of Power**

When a failure occurs, an error message on the dot matrix display will describe the cause of the failure. The failure screen will continue to be displayed until acknowledged by pressing [CLR]. A "Cabinet Trouble" annunciator will also alarm.

In addition, the RP-86A modules are fail-safe and actuate Trip 1 and Trip 2 during a loss of power. The High Rad alarm will sound and lock in until reset (once power comes back).

2.5 Annunciators and OAC Functions

2.5.1 Annunciators

Beta Optron 30 window annunciators are used for alarm readouts. One annunciator unit is used on each process and area cabinet group. The type of conditions which are annunciated consist of:

- Low range process monitor high level trips.
- Low flow alarms for each process monitor, except 1/2 EMF33 and EMF50.
- Low flow alarms on 1EMF44, 2EMF44 and EMF49 will occur only if flow is present and subsequently lost.
- Area monitor high level trips.
- Cabinet trouble - actuated on any low flow or non-operate condition.

2.1.11 Component Cooling Water Monitor

The Component Cooling Water System is monitored by the following channels:

- 1(2) EMF 46A - Unit 1(2) Component Cooling A
- 1(2) EMF 46B - Unit 1(2) Component Cooling B

Objective # 2

These channels monitor the component cooling water downstream of the component cooling water coolers. 1EMF-46A monitors heat exchanger 1A while 1EMF-46B monitors heat exchanger 1B. 2EMF-46A monitors heat exchanger 2A while 2EMF-46B monitors heat exchanger 2B.

A radiation indication would indicate a failure of any of various heat exchangers containing primary reactor coolant or the presence of NA-24 due to sodium activation from chemical compounds (Sodium Molybdate and Sodium Tetraborate) added to the system as a corrosion inhibitor.

Objective # 2, 3

Should a Trip 2 high radiation alarm be received on either 1EMF-46A or 1EMF-46B, the component cooling water surge tank vent 1KC122 is automatically closed to prevent release of volatile fission products. A high radiation alarm on 2EMF-46A or 2EMF-46B will automatically close 2KC122.

The purpose of Auto actions: KC122 shutting will not prevent a water release to the Aux. Building. should a primary to KC leak occur, but if the leak is small it will terminate an airborne release to the Aux. Bldg. which originates in the KC System.

These channels use a single range gamma liquid (NaI Scint.) detector.

2.1.12 Boron Recycle Evaporator Distillate Monitor

Objective # 2

0EMF-47 - Boron Recycle is used to monitor the Boron Recycle evaporator distillate downstream of the filter.

Objective # 2, 3

Normally, the distillate will be routed to the Reactor Makeup Water Storage Tanks. On a Trip 2 high radiation alarm, valve 1NB219 will divert this flow to the Boron Recycle Holdup Tank.

The purpose of Auto actions are to prevents contaminating RMWST should the NB evaporator fail to function as designed.

This channel uses a single range gamma liquid (NaI Scint.) detector.

ACTION/EXPECTED RESPONSE	RESPONSE NOT OBTAINED

B. Symptoms

- **"LO KC HX A INLET FLOW" computer alarm**
- **"LO KC HX B INLET FLOW" computer alarm**
- **Low flow alarms on components supplied by KC**
- **High temperature alarms on components supplied by KC**
- **Low level or level going down in KC Surge Tank**
- **Abnormal KC pump Flow**
- **"LO KC SURGE TANK COMPARTMENT A LEVEL" computer alarm**
- **"LO KC SURGE TANK COMPARTMENT B LEVEL" computer alarm**
- **"KC SURGE TANK ABNORMAL LEVEL" alarm.**

C. Operator Actions

__ 1. **Check any KC pump - ON.**

Perform the following:

a. Isolate:

__ • Normal letdown

__ • Excess letdown

__ • ND letdown.

__ b. Close all NM valves located on 2MC-8 (vertical board).

__ 2. **Monitor Foldout page.**

__ 3. **Secure any dilution in progress.**

__ 4. **Check ND - IN RHR MODE.**

__ **GO TO Step 7.**

Nomenclature:	2EMF 46A TRAIN A KC HI RAD	Window:	A4

Setpoint: Trip 2

Origin: 2EMF-46A Gamma Scintillation Detector (Train A)

Probable Cause:
- Tube leak on any heat exchanger with radioactive water
- Normal increase due to Sodium activation

> **NOTE:** 2KC-122 (KC Surge Tank Vent) will reopen when 2EMF-46A alarm clears.

Automatic Action: Automatic closure of 2KC-122 (KC Surge Tank Vent).

Immediate Action: Ensure KC Surge Tank Vent closes.

Supplementary Action:

1. Notify Chemistry/RP to sample for activity.
2. Attempt to locate source of leakage.
3. **IF** KC Surge Tank level is going up in an uncontrolled manner:
   A. Check OAC points for NC Pump Thermal Barrier KC Outlet flow alarms normal.
   B. **IF** alarms are **NOT** normal, close the following valve on the affected NC Pump:
      - 2KC-394A (A NC Pump Therm Bar Otlt)
      - 2KC-364B (B NC Pump Therm Bar Otlt)
      - 2KC-345A (C NC Pump Therm Bar Otlt)
      - 2KC-413B (D NC Pump Therm Bar Otlt)
   C. **IF** NC to KC leak still exists, go to AP/2/A/5500/010 (NC System Leakage Within Capacity of Both NV Pumps)

References:
- MC-2573-1.0
- HP/0/B/1003/008 (Determination of Radiation Monitor Setpoints (EMFs))

End of Response

Unit 2

CLASSROOM TIME (Hours)

NLO	NLOR	LPRO	LPSO	LOR
		1.0	1.0	1.0

OBJECTIVES

	OBJECTIVE	NLO	NLOR	LPRO	LPSO	LOR
1	Explain the purpose for AP/21 (Loss of KC or KC System Leakage). AP21001			X	X	X
2	Analyze the mitigating strategy (major actions) contained in the procedure. AP21002			X	X	X
3	Given scenarios describing accident events and plant conditions, evaluate the basis for any caution, note, or step. AP21003			X	X	X
4	Given scenarios describing accident events and plant conditions, evaluate conditions which require application of continuous action steps. AP21004			X	X	X

CLASSROOM TIME (Hours)

NLO	NLOR	LPRO	LPSO	LOR
3	3	3	3	2

OBJECTIVES

SEQ	OBJECTIVE	NLO	NLOR	LPRO	LPSO	LOR
1	State the purpose of the Process and Area Radiation Monitoring System. WEEMF001	X	X	X	X	
2	List the process monitored by each EMF and why it is monitored. WEEMF002	X	X	X	X	X
3	Describe the automatic actions that occur as a result of a Trip alarm for each of the following EMFs • 1(2) EMF 31 Unit 1(2) Conv. Waste Treatment System • 1(2) EMF 34(L) Unit 1(2) Steam Generator Sample • 1(2) EMF 35(L) Unit 1(2) Unit Vent Part. (low range) • 1(2) EMF 36(L) Unit 1(2) Unit Vent Gas (low range) • 1(2) EMF 37 Unit 1(2) Unit Vent Iodine Monitor • 1(2) EMF 38(L) Unit 1(2) Cont. Part. (low range) • 1(2) EMF 39(L) Unit 1(2) Cont. Gas (low range) • 1(2) EMF 40 Unit 1(2) Cont. Iodine • 0EMF 41 Aux. Bldg Vent. • 1(2) EMF 42 Unit 1(2) Spent Fuel Bldg. Vent. • 1(2) EMF 44(L) Unit 1(2) Cont. Vent. Drain Tank • 1(2) EMF 46A/B Unit 1(2) Component Cooling • 0EMF 47 Boron Recycle Evap. Distillate (cont.)	X	X	X	X	X

{SEQ is the order in which the objective is first covered in the lesson plan)

is addressed by determination of response for the selected impact

Examination Outline Cross-reference:	Level	RO	SRO
	Tier #	2	
	Group #	1	
	K/A #	GKA 2.4.30 (076)	
	Importance Rating	2.7	

(Emergency Procedures / Plan; Knowledge of events related to system operation / status that must be reported to internal organizations or external agencies, such as the state, the NRC, or the transmission system operator.)

Proposed Question: Common 25

The following conditions exist on Unit 1:

- The 1A RN Pump has been OOS for 80 hours.
- The OSM has determined that Unit 1 was not brought to Mode 3 as required by Technical Specifications within the allotted Completion Time, and declares an Unusual Event.
- 5 minutes after declaring the Unusual Event, the Emergency Notification form is completed, and the OSM directs you to make the State notification.

Which ONE (1) of the following identifies the time frame within which this notification must be made?

A. 5 minutes.

B. 10 minutes.

C. 25 minutes.

D. 55 minutes.

Proposed Answer: **B**

Explanation (Optional):

A. Incorrect. Plausible because there are 5 minute action requirements in technical specifications

B. Correct. RP/0/A/5700/029 states that initial to the State and counties must

be made within 15 minutes of the event declaration.

C. Incorrect. Plausible because there are 30 minute action requirements in technical specifications

D. Incorrect. Plausible because the NRC must be notified in this time frame

Technical Reference(s): RP/0/B/5700/029, Rev 9 (Attach if not previously provided)

EP-EMP, p13 Rev 12 (Including version or revision #)

Proposed references to be provided to applicants during examination: None

Learning Objective: N/A (As available)

Question Source:
- Bank # _____
- Modified Bank # McGuire NRC Exam Bank #283 (Note changes or attach parent)
- New _____

Question History: Last NRC Exam NA

Question Cognitive Level:
- Memory or Fundamental Knowledge X
- Comprehension or Analysis _____

10 CFR Part 55 Content:
- 55.41 10
- 55.43 _____

Comments:
KA is matched at the RO level because a loss of RN (Service Water) may result in emergency classification. If it does, notifications must be made.

Question 283 EPEALN01 EPEALN01

1 Pt

Unit 1 is at full power, steady state. Given the following events and conditions:

- Power is lost to all control room annunciators.
- 20 minutes later, the OSM determines that the declaration of an Unusual Event is warranted.
- 5 minutes after declaring the Unusual Event, the Emergency Notification form is completed, and the OSM directs an operator to make the State notification.

From the time of completion of the notification form, how much time does the operator have to make the State notification?

A. 5 minutes

B. 10 minutes

C. 15 minutes

D. 35 minutes

Answer 283

B
EP-EAL, objective 7

3) This EAL will be declared if the point total from the Fission Product Barrier Matrix (Enclosure 4.1) is 1- 3 points or if criteria are met in Enclosures 4.1 through 4.7 of RP/000. Note that the matrix is only applicable in Modes 1 –4.

4) Examples:

- Potential Loss of Containment (1 point)
- Loss of Containment (3 points)
- Unidentified leakage or pressure boundary leakage greater than or equal to 10 gpm in Modes 1- 4.
- Identified leakage greater than or equal to 25 gpm in Modes 1- 4.
- If a Main Steam line is ruptured inside containment it is considered to be an explosion inside containment and the fact that the steam line is damaged is enough to meet the criteria for Notification of Unusual Event under Enclosure 4.6 (Fire/Explosion) of RP/000.

5) Make the following notifications within 15 minutes of declaring the event:

(a) North Carolina

(b) Lincoln, Gaston, Iredell, Catawba, Cabarrus, and Mecklenburg Counties.

6) Make the following notification immediately after notifying states and counties <u>BUT</u> within 1 hour.

(a) NRC (ENS phone)

7) Station Manager or Designee shall be notified as soon as is reasonably possible.

NOTE: To ensure complete understanding of the Emergency Organization activation method, discuss actions contained in Response Procedures.

b) <u>Alert</u>

1) Events are in progress or have occurred which involve an <u>actual or potential</u> substantial degradation of the level of safety of the plant or a security event that involves probable life threatening risk to site personnel or damage to site equipment because of HOSTILE ACTION.

2) Any releases are expected to be limited to small fractions of the EPA Protective Action Guideline exposure levels.

3) This EAL will be declared if the point total from the Fission Product Barrier Matrix is 4 - 6 points. Note that the matrix is only applicable in Modes 1 – 4.

_____ 1. Make initial notifications according to the following criteria:

Initial Notifications {G-07-0127}

1. Initial notifications to the State(s) and counties must be made within 15 minutes of the event declaration using the Emergency Notification form (ENF).
2. For an upgrade in classification prior to or while transmitting an initial message:

   -The notification for the lesser emergency classification must be made within 15 minutes of the lesser classification declaration time.

   -The agencies must be informed that an upgrade in classification will be coming.

   -The upgraded classification message must be transmitted within 15 minutes of the upgraded classification declaration time.

2. Complete an Emergency Notification Form by one of the following:

☐ Obtain a preprinted ENF.

OR

☐ Obtain a blank ENF.

NOTE: Messages are sequentially numbered throughout the drill/event beginning with message number 1, and continues until termination of the drill/event.

2.1 Complete Line 1 as follows:

☐ 2.1.1 Check A (Drill) **OR** B (Actual Event).

☐ 2.1.2 Record message number.

NOTE: Notification Time, Date, and Authentication will be completed during message transmission.

☐ 2.2 On Line 2 check A (Initial).

2.3 Complete Line 3 as follows:

☐ 2.3.1 Record "McGuire Nuclear Site" as Site.

☐ 2.3.2 Record (704) 875-6044 as confirmation telephone number.

Examination Outline Cross-reference:	Level	RO	SRO
	Tier #	2	
	Group #	1	
	K/A #	076 K3.07	
	Importance Rating	3.7	

(Knowledge of the effect that a loss or malfunction of the SWS will have on the following: ESF loads)

Proposed Question: Common 26

Following a reactor trip from 100% power the following conditions exist on Unit 2:

- NC Pressure - 1400 psig
- Containment Pressure – Risen slowly to 2.4 psig
- 2A RN Pump fails to start (auto and manual).
- All other components function as designed.

Which ONE (1) of the following describes the impact of the failure of the 2A RN Pump to start?

A. 2A1 and 2A2 DG VG Air Compressors will overheat.

B. 2A NV Pump Gear oil will overheat.

C. 2A NS Pump Motor will overheat.

D. All Makeup capability is lost to the 2A DG KD Surge Tank.

Proposed Answer: **B**

Explanation (Optional):

A. Incorrect. The VG Air Compressors are NOT safety related and will receive a shunt trip signal on an Ss. (OP-MC-DG-DGA (pg25)

B. Correct. The 2A NV Pump start on an SI signal which is present under the stated conditions. Section 2.4 of OP-MC-PSS-RN identifies the Centrifugal Charging Pump Gear Oil Cooler as a load supplied by the RN System off of the essential header, that will be needed during an SI. (OP-MC-PSS-RN (p31))

C. Incorrect. The 2A NS is not running under the present conditions (OP-MC-PSS-RN p31). Containment Spray Actuation occurs at 3 psig in Containment (OP-MC-IC-ISE p__).

D. Incorrect. Makeup capability to the 2A DG KD system can be supplied by the RN or the YM System. (OP-MC-DG-DGA (pg47))

Technical Reference(s)	OP-MC-PSS-RN p31 Rev 38	(Attach if not previously provided)
	OP-MC-DG-DGA p25, 47 Rev 29	(Including version or revision #)
	OP-MC-IC-ISE p27 Rev 30	

Proposed references to be provided to applicants during examination: None

Learning Objective: PSS-RN#10 (As available)

Question Source:	Bank #		
	Modified Bank #	3970	(Note changes or attach parent)
	New		

Question History: Last NRC Exam NA

Question Cognitive Level:	Memory or Fundamental Knowledge	
	Comprehension or Analysis	X

10 CFR Part 55 Content:	55.41	7
	55.43	

Comments:
KA is directly matched because item evaluates failure of RN effect on ESF loads (NV Pump, high head SI)

Question 3970 PSSRN021 PSSRN021
1 Pt Which of the following is a Nuclear Service Water System essential header load?

A. Steam generator blowdown heat exchanger.

B. Auxiliary feedwater pump motor cooler.

C. Reactor coolant pump motor winding cooler.

D. Positive displacement pump bearing oil cooler.

Answer 3970
B
PSS-RN, section 2.4
Objective 10

To **operate** the turning gear while engaged, open the Cylinder Port Valves from each cylinder on the diesel engine, start the before & after lube oil pump and plug in the remote unit.

To **disengage** the turning gear, release the pressure of the drive gear against the flywheel, slowly remove the locking pin and then lower assembly to its resting-place.

Objective # 3

There are two limit switches associated with the turning gear that will prevent an automatic or manual start of the diesel if the turning gear is engaged. Both limit switches must be made to prevent an auto start. Only one switch must be made to prevent a manual start. A failure of either limit switch while the diesel operates will result in a manual mode trip. If both limit switches fail while operating in the auto mode, the diesel will not trip. If the diesel is prevented from automatically starting then it is inoperable.

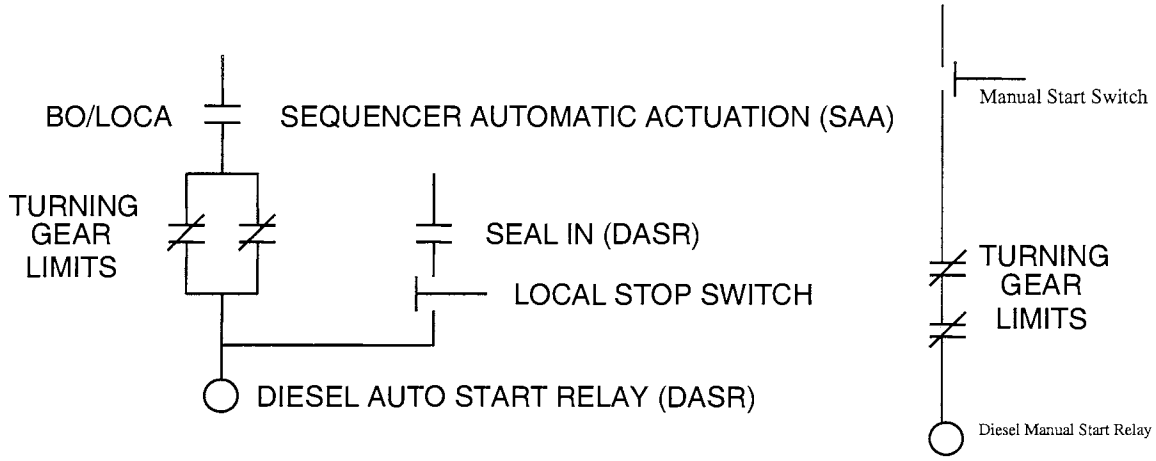

2.2 Starting Air System

Objective # 4

The Starting Air System provides fast start capability by using high-pressure air to roll the diesel engine until it is firing on its own.

Objective # 5

Each air compressor is designed to maintain its associated header pressure at 225-235 psig. As header pressure decreases to 225 psig the compressor will automatically start. Once pressure increases to 235 psig, the compressor will automatically stop.

Each compressor inlet is filtered. This reduces/prevents damage to compressor components and also helps reduce the overall air system particulate contamination.

A relief valve is installed on each compressor outlet (set at 275 psig) to provide overpressure protection.

The VG Compressors are not safety related equipment and is therefore an unnecessary load during a Safety Injection event. Each compressor is equipped with a shunt trip device that will load shed the compressor on a Safety Injection actuation. This load shed does not occur during a Blackout.

2.4 Supply Headers

Objective # 8, 10

The RN system provides flow to the following **headers**:

- "A" and "B" essential headers
- Reactor building Non-essential headers
- Auxiliary Building Non- essential headers

There is one redundant **essential header** for each train. These headers contain the equipment and component essential for safe shutdown of the plant. (**Refer to Drawing 7.4 and 7.6).** The following loads are supplied by the essential header. Included in this listing is whether these components are supplied on S_S , BO or S_P:

LOADS	S_S	BO	*S_P
1) Pump motor coolers/AHU			
• Component Cooling Pump motor (KC)	X	X	
• Centrifugal Charging Pump motor (NV)	X	X	
• Safety Injection Pump motor (NI)	X		
• Residual Heat Removal Pump motor (ND)	X		
• Containment Spray Pump motor (NS)	X		
• Fuel Pool Cooling Pump motor (KF)	X	X	
• Nuclear Service Water Pump motor (RN)	X	X	
• Auxiliary Feedwater Pump (CA)	X	X	
2) Heat exchangers:			
• Containment Spray (NS)			X
• Component Cooling (KC)	X	X	
• Diesel Generator Engine Cooling (KD)	X	X	
• D/G Starting Air Compressor After Cooler	X	X	
• Control, Cable and Equip Room A/C Cond (YC)	X	X	
3) Oil coolers :			
• Centrifugal Charging Pump Bearing (NV)	X	X	
• Centrifugal Charging Pump Gear (NV)	X	X	
• Safety Injection Pump Bearing (NI)	X		

* Note: If an S_P is present you will also have had an S_S. The S_P column only shows the additional loads which would be served when the S_P occurs.

Phase "A" Containment Isolation (S_t) is actuated by a Safety Injection (S_S) or Manually ($^1/_2$ pushbuttons). Phase "A" isolates all non-essential containment penetrations. A Manual Phase "A" (S_t) actuation will also actuate S_H (Containment Ventilation Isolation). The initiate pushbutton for Phase "A" (S_t) is also the initiate pushbutton for Containment Ventilation Isolation (S_H) but they have separate reset pushbuttons. Phase "A" can be reset with S_S (Safety Injection) signal present (not reset), via Control Board Pushbuttons.

Objective # 13

Containment Spray Actuation (NS) is actuated by:

Hi Hi Containment Pressure	**>3.0 psig on $^2/_4$ channels <u>plus</u> CPCS**
Manually	**$^1/_2$ pushbuttons <u>plus</u> CPCS**

<u>NOTE</u>: Initiate pushbuttons for "Phase B and Containment Spray" are the same, however "Reset" pushbuttons are separate.

The automatic actuation of Containment Spray is one of the only functions that requires the bistable to energize to perform its required action. It is not desirable to have a loss of power actuate containment spray, since the consequences of an inadvertent actuation of containment spray could be serious. Note that this function also has the inoperable channel placed in bypass rather than trip to decrease the probability of an inadvertent actuation.

The Containment Pressure Control System (CPCS) requires a 0.35 psig CPCS signal for permissive. NS can be manually <u>actuated</u> with this permissive. The signal can be manually <u>reset</u> by (2) separate train related pushbuttons.

When containment pressure decreases to < 0.35 psig, CPCS stops the NS Pumps and closes the NS pump discharge containment isolation valves. If the NS signal has not been reset and containment pressure increases to ≥ 0.35 psig, CPCS opens the NS valves. If pressure continues to increase, at ≥ 0.8 psig, pumps restart. Having the pump restart delayed reduces starting duty cycles.

If the NS signal has been reset and containment pressure is < 0.35 psig, NS will secure as stated above. NS will not restart automatically until containment pressure increases to > 3 psig again.

The NS signal <u>can be reset</u> with containment pressure > 3 psig. This would be done in order to transfer NS pump suction to the containment recirc sump in accordance with EP/1(2)/A/5000/ES-1.3 "Transfer to Cold Leg Recirc".

The total system capacity is 800 gallons with the Surge Tank having a capacity of 100 gallons.

Objective # 27

Normal makeup to the system is from the Demineralized Water System (YM) and assured makeup to the system is from the Nuclear Service Water System (RN). Both make-up sources are manually initiated.

Objective # 29

There are three diesel trips (Manual Mode only) that come directly from the Engine Cooling Water System.

1. If the Jacket Water and Intercooler Water Pump discharge pressure is not >15 psig before the 20 second timer times out, the diesel will trip.
2. If the system surge tank level decreases to <11.5 " H_2O, the diesel will trip. Also, surge tank level must be >11.5 " H_2O to allow a diesel start in the manual mode.
3. Normal engine outlet temperature while operating will run from 165°F to 175°F. If engine outlet temperature exceeds 200°F, the diesel will trip. Also, cooling water temperature must be <200°F to allow a diesel start in the manual mode.

2.5 Diesel Fuel Oil System

Objective # 30

The Diesel Engine Fuel Oil System provides the fuel oil needs of the diesel.

The Fuel Oil Transfer Pump takes a suction on the Fuel Oil Storage Tank and pumps fuel to maintain level in the Fuel Oil Day Tank.

The Fuel Oil Storage Tank has a 50,000-gallon capacity and is used to store fuel for use by the diesel. The tank is sized for 5 days full load operation.

Objective # 33 & 35

The Fuel Oil Transfer Pump will automatically start when the day tank is at make-up level and then auto stop when proper day tank level is achieved. If a fire in the diesel room occurs the pump will trip (Manual Mode Only).

The Fuel Oil Transfer Filters are used to remove any particulate from the fuel oil. Normally one filter in service at a time. The mechanical maintenance department, based on notification by Operations of high differential pressure does element change out.

OBJECTIVES

	OBJECTIVE	NLO	NLOR	LPRO	LPSO	LOR
8	Describe the RN System Flow path (suction source, essential and non-essential header alignment and discharge point) for the following:					
	• Normal operation	X	X	X	X	
	• Operation following a Blackout	X	X	X	X	X
	• Operation following a Safety Injection	X	X	X	X	X
9	Explain the reason for taking a suction on the low level intake.	X	X	X	X	
10	Concerning the RN essential and non-essential headers:					
	• List the loads supplied by each header	X	X	X	X	
	• Identify which loads are automatically supplied on a Blackout, Safety injection and/or Phase B.	X	X	X	X	X
11	Explain the reason for **NOT** isolating the auxiliary building non-essential header on a Blackout signal.	X	X	X	X	X
12	Describe the operation including any interlocks for the following valves: • RN42A (AB Non Ess Supply Isol) • RN-70A (171B) (A(B) D/G Supply Isol) • 1RN1 (Low Level Intake Isolation) • Engineering Safeguards Modulating Control Valves and Reset Circuitry	X	X	X	X	X
13	Describe the operational concerns when cycling RN valves that are shared between Unit 1 and Unit 2.			X	X	X
14	Given a parameter associated with the RN system, describe the indications for that parameter.	X	X	X	X	
15	Given a Limit and Precaution associated with the RN System, discuss its basis and when it applies.	X	X	X	X	X

Examination Outline Cross-reference:	Level	RO	SRO
	Tier #	2	
	Group #	1	
	K/A #	GKA 2.4.35 (078)	
	Importance Rating	3.8	

(Emergency Procedures / Plan: Knowledge of local auxiliary operator tasks during emergency and the resultant operational effects.)

Proposed Question: Common 27

Given the following:

- Unit 1 is at 100% power.
- The VI system is in a normal lineup.
- The VS system is in a normal lineup.
- A VI header rupture occurs.
- VI system pressure is 80 psig and lowering.
- The crew is performing actions of AP/22, Loss of VI.
- The CRSRO dispatches an operator to perform Enclosure 2, Startup of D, E and F VI Compressors.

Which ONE (1) of the following identifies the actions required to be performed to prepare D, E, and F VI Compressors for starting?

A. RL Pumps must be verified running with adequate discharge pressure prior to startup of D, E, and F VI compressors. Performance of Enclosure 6, D, E and F VI Compressor Operation with Low Control Air, is NOT required.

B. RL Pumps must be verified running with adequate discharge pressure prior to startup of D, E, and F VI compressors. Enclosure 6, D, E and F VI Compressor Operation with Low Control Air, must <u>also</u> be performed to provide VB control air supply to VI compressors.

C. KR Pumps must be verified running with adequate discharge pressure prior to startup of D, E, and F VI compressors. Performance of Enclosure 6, D, E and F VI Compressor Operation with Low Control Air, is NOT required.

D. KR Pumps must be verified running with adequate discharge pressure prior to startup of D, E, and F VI compressors. Enclosure 6, D, E and F VI Compressor Operation with Low Control Air, must <u>also</u> be performed to

provide VB control air supply to VI compressors.

Proposed Answer: **C**

Explanation (Optional):

A. Incorrect. RL Pumps are required for startup of A, B, C air compressors. D, E, and F require KR to be running. Second half of choice is correct.

B. Incorrect. RL Pumps are required for startup of A, B, C air compressors. D, E, and F require KR to be running. Second half of choice is incorrect, because air pressure is not low enough for Enclosure 6 to be required. (70 psig).

C. Correct. AP/22 requires performance of Enclosure 2, which ensures KR Pumps running prior to starting D, E, F air compressors

D. Incorrect. Plausible because first half is correct, but wrong because second half of choice is incorrect

Technical Reference(s)	AP/1/A/5500/22, Rev 27	(Attach if not previously provided)
	AP 22 Background Document p4,5,6, Rev 12	(Including version or revision #)
	SS-VI, p 27, 51 Rev 32	

Proposed references to be provided to applicants during examination: None

Learning Objective: AP-AP22 #2, 3 (As available)

Question Source:	Bank #		
	Modified Bank #		(Note changes or attach parent)
	New	X	

Question History: Last NRC Exam NA

Question Cognitive Level:	Memory or Fundamental Knowledge	
	Comprehension or Analysis	X

10 CFR Part 55 55.41 4, 10

Content: _____

55.43 _____

Comments:

KA is matched because item evaluates AO responsibility during a loss of Instrument Air, and also evaluates status of components for proper operation of system

ACTION/EXPECTED RESPONSE | RESPONSE NOT OBTAINED

B. Symptoms

- **Abnormally low VI pressure**
- **VI pressure - GOING DOWN**
- **"VI COMP PNL TROUBLE" alarm**
- **"VI/VS LO PRESS" alarm**
- **"VI/VS LO LO PRESS" alarm**
- **Erratic plant instrumentation and/or control**
- **Loss of KR flow to VI compressors.**

C. Operator Actions

__ 1. **Announce occurrence on page.**

__ 2. **Ensure at least 2 KR pumps running.**

__ 3. **Ensure at least 2 KC pumps running.**

STEP DESCRIPTION FOR AP22

STEP 1:

PURPOSE:

Alert plant personnel of loss of instrument air.

DISCUSSION:

Plant pages of abnormal conditions can have two benefits. One is alerting any personnel that actions they have taken could have led to the abnormal condition (with the expectation that they contact the CR). The other is alerting personnel to help with the abnormal condition (STA to the control room, NLOs mobilized, etc.).

REFERENCES:

STEP 2:

PURPOSE:

The KR System is a required support system for the operation of 'A' through 'F' VI Compressors'. This step will attempt to get at least the minimum of two KR pumps required for this support.

DISCUSSION:

Cooling water flow is necessary to prevent compressor damage caused by excessive temperatures. D, E, and F VI Compressors are interlocked to prevent startup of an operating compressor unless proper cooling water flow is provided (low cooling water flow interlock). All six VI Compressors (A-F) will trip on a High Discharge Air Temperature and / or High Oil Temperature. Both of these trips could be indicative of insufficient cooling water flow.

This step is early in the AP as prompt action here could prevent additional compressor damage and/or trips (Compressors A, B, or C) or at a minimum setup the cooling support before step which attempts to get additional compressors running, as required.

- **Excessive Vibration (Factory Set Value)**

  For each of the above conditions, an indicating light on the Air Compressor Control Panel will energize. Each safety trip circuit includes a seal-in that may be de-energized with the RESET switch once the initiating trouble has been cleared. This action also de-energizes the associated TROUBLE indicating light. The Excessive Vibration Trip requires an additional RESET to regain control of its associated Compressor. This additional RESET is a recessed pushbutton located on the compressor base.

The reciprocating air compressors (A, B, & C) are normally aligned for standby operation (available to support the centrifugal air compressors, upon decreasing air pressure, and supply the instrument air needs of the plant) while the centrifugal air compressors (D, E, & F) supply the instrument air needs of the plant.

Objective # 3

The Reciprocating Air Compressors are two-stage water-cooled compressors, designed to deliver 650 scfm of air at 100 psig. **Cooling water, provided for the intercoolers, oil coolers, and the compressor water jackets, is supplied by the Recirculated Cooling Water System (KR).**

Objective # 3

1.2.4 VI Reciprocating Air Compressor Aftercoolers

Two 100% capacity aftercoolers are located at the outlet for A, B, and C compressors, connected with the common discharge header of the three compressors, and in parallel with each other. **The two identical aftercoolers are each capable of cooling 1800 scfm of air flow within 15°F of it's cooling medium, Low Pressure Service Water System (RL), which ranges from 50°F to 80°F and is normally 60°F.**

1.2.5 VI Reciprocating Air Compressor Moisture Separators

Two 100% capacity moisture separators (A and B) are located just downstream of their respective aftercooler. The moisture separator section forces the air to swirl, removing the water particles by centrifugal force.

1.2.6 VI Centrifugal Air Compressor Air Intake Filters

The Centrifugal Compressor Air Intake Filters are free standing felted media with a normal retention of 1 micron. Therefore, these filters prevent large and relatively small particulate from entering the compressor intake.

A differential pressure sensing device and a manometer senses filter differential pressure. Should filter ΔP reach 8 inches of water, operations should notify mechanical maintenance for cleaning or replacement.

ACTION/EXPECTED RESPONSE	RESPONSE NOT OBTAINED
4. **Restore VI as follows:**	
__ a. Check VI header pressure - GREATER THAN 70 PSIG.	a. Perform the following: 1) Dispatch operator to perform the following enclosures using copy located beside Service Bldg Lube Oil Station door: __ • Enclosure 3 (Startup of A, B, and C VI Compressors) __ • Enclosure 6 (D, E and F VI Compressor Operation with Low Control Air) __ 2) **GO TO** Step 4.c.
b. Dispatch operator(s) to start VI compressors as necessary to restore VI using copy of enclosures located beside Service Bldg Lube Oil Station door: __ • Enclosure 2 (Startup of D, E and F VI Compressors) __ • Enclosure 3 (Startup of A, B, and C VI Compressors).	
__ c. Dispatch operator to search for possible leaks.	
__ d. **IF AT ANY TIME** VI header pressure is 90 PSIG and going down ("VI/VS LO PRESS" alarm), **THEN** dispatch operator to ensure Diesel VI compressors running **PER** Enclosure 4 (Diesel VI Compressor Operation), using copy of procedure located on column 2B32, Unit 2 TB, near exit door leading to Diesel VI compressors.	
__ e. **IF AT ANY TIME** VI header pressure goes below 82 PSIG ("VI/VS LO-LO PRESS" alarm), **THEN** dispatch operator to bypass VI dryers and isolate VS **PER** Enclosure 5 (VI Dryer and VI to VS System Isolation) using copy of procedure located beside Service Bldg Lube Oil Station door.	

ACTION/EXPECTED RESPONSE	RESPONSE NOT OBTAINED
__ 2. **Check VI pressure as read on 0MVIPT5090 (VI Supply to Unit 2 Hdr Press) (Unit 2 TB, 739, column 2N-32) - GREATER THAN 70 PSIG.**	**Perform the following:** __ a. **IF** VI pressure greater than 35 PSIG, **THEN** start A, B, and C VI compressors **PER** Enclosure 3 (Startup of A, B, and C VI Compressors). **CAUTION** **The VI header normally supplies control air to D, E, and F VI Compressors. If control air pressure is less than 70 PSIG, compressor performance may be degraded.** b. Perform one of the following to start D, E, and F VI Compressors: __ • **IF** desired to start compressors with control air aligned to alternate supply, **THEN GO TO** Enclosure 6 (D, E and F VI Compressor Operation with Low Control Air). OR __ • **IF** currently running compressors are capable of raising VI pressure greater than 70 PSIG in a timely manner, **THEN** wait until pressure is greater than 70 PSIG before starting compressor(s) in subsequent steps.
3. **Start all compressors that are capable of being started as follows:** __ • To start D VI compressor, **GO TO** Step 4. __ • To start E VI compressor, **GO TO** Step 5. __ • To start F VI compressor, **GO TO** Step 6.	__ **IF all compressors that are capable of being started are already running, THEN GO TO Step 7.**

ACTION/EXPECTED RESPONSE	RESPONSE NOT OBTAINED
1. **Check KR in service as follows:** __ • Any KR pump - RUNNING __ • KR pump discharge pressure - GREATER THAN 50 PSIG.	**Perform the following:** __ a. Check at least 4 ft in sight glass on side of KR Storage Tank. b. **IF** KR Storage Tank level less than 4 ft, **THEN** cycle one of the following to maintain level greater than 4 ft: __ • 1KR-16 (KR Storage Tank YM Makeup Isol) (at KR Storage Tank) OR __ • 1KR-97 (KR Storage Tank Makeup From CM Isol) (at KR Storage Tank). __ c. **IF** KR pump running, **THEN** vent pump and system as necessary. d. **IF** all KR pumps are off, **THEN** perform the following: __ 1) Select KR pump to be started. __ 2) Ensure selected pump is vented. 3) Throttle selected pump's discharge valve one quarter turn open: __ • A pump: 1KR-7 (Recirculated Cooling Water Pump A Disch Isol) __ • B pump: 1KR-8 (Recirculated Cooling Water Pump B Disch Isol) __ • C pump: 1KR-9 (Recirculated Cooling Water Pump C Disch Isol). __ 4) Have Control Room start selected pump. __ 5) Slowly open KR pump discharge valve. __ 6) **IF** available, **THEN** have Control Room start second pump. __ e. **WHEN** time allows, **THEN REFER TO** OP/0/B/6400/004 (Recirculating Cooling Water System), Enclosure 4.1 (KR System Startup and Normal Operation).

STEP 3:

PURPOSE:

Avoid KC pump runout.

DISCUSSION:

KC flow control valves on most components fail open on a loss of instrument air. A loss of VI could significantly increase KC flow, possibly beyond the 4000 gpm/ pump limit for runout for continued operation. If only one KC pump is running, then starting a second one could prevent severe runout. A pump operating well over its runout point can sustain damage in very little time. This step is early in the AP because this action doesn't take much time for the benefit that may be gained. A loss of VI KC flow model was performed under Plan 95-0791. The assumption for the model was 2 KC pumps running. The model indicated 4700gpm/pump flow as a result of loss of VI, with the 2 pumps running. Based on discussions with the vendor, this would present no pump problems for a short duration of approx. 3 hrs. A step later in the AP addresses getting KC flow to less than 4000gpm/pump for sustained losses of VI.

REFERENCES:
Plan 95-0791, Loss of VI KC flow modeling.

STEP 4:

PURPOSE:

Restore VI pressure.

DISCUSSION:

This is the only step in the body of the AP that restores VI pressure. It attempts this by getting VI compressors running, bypassing the VI dryers/isolating VS, and stopping VI leaks (if applicable).

The compressors of choice are D, E, and F because of their capacity, quality of air, and reliability. An operator is dispatched to perform an enclosure to get these three compressors running. Also, as necessary, an operator is dispatched to perform an enclosure to start A, B, and C compressors.

There are two basic requirements in the enclosures for starting D, E, and F compressors. First, KR must be available (> 50 psig should be sufficient cooling water). KR is interlocked such that the compressors will not start without KR.

Second, sufficient control air pressure must be available for proper operation. "70 PSIG" VI header pressure determines which enclosure the operator will use to start and monitor D, E, and F compressor operation (Enclosure 2 or 6). Note that if VI pressure is less than 70 PSIG, the AP requires implementation of Enclosure 6, even if all three compressors are running. This is because D, E, and F VI compressors may be running in a degraded condition. (In 2003, Grand Gulf Nuclear Station had an event where their VI compressors began failing similar to what is described below.)

D, E, and F VI compressors respond to low control air pressure as follows:

1. VI compressor inlet and bypass valves require control air to operate. As control air pressure drops below 70 PSIG, these valves begin moving toward their fail safe position, causing compressor output to go down. If control air pressure continues to drop, these valves eventually reach their fail safe position, and the compressor will be fully unloaded.

2. Compressor "surge" is another possible outcome of low control air pressure. If the VI compressor inlet valve fails closed faster than the bypass valve fails open, a reversal of flow through the compressor may occur, resulting in "surge". If surge occurs, the compressor will automatically unload, and control air must be restored to re-load the compressor.

3. If control air pressure drops low enough, the compressor will trip on low seal air pressure.

Enclosure 6 (D, E, and F VI Compressor Operation with Low Control Air) uses the following strategies to restore VI:

1. If running compressors are able to restore VI to normal, Enclosure 6 is exited.

2. If running compressors cannot restore pressure above 70 PSIG, VB will be aligned to the control air header. This should restore normal control air pressure to the compressor control valves so that proper compressor operation is possible.

3. Station management may decide to isolate the Unit 1/ Unit 2 Turbine bldg headers to reduce VI system demand, and thus restore normal VI pressure. This option may be worthwhile if running compressors are unable restore VI to normal and VI header pressure has dropped to the point that air operated valves have begun to fail. Note, however, that isolating either Turbine Bldg header too soon could end up causing a transient (i.e. uncontrolled cooldown due to steam drains failing open, CF reg valves failing closed, etc).

4. If VB is unavailable, it may be necessary to align nitrogen cylinders to the VI compressor control air header.

If VI header pressure is 90 psig and going down, this step dispatches an operator to ensure G and H diesel compressors are running. G and H get an auto start signal when 0VIPS5070

The oil cooler works in conjunction with a 3-way temperature control valve to maintain the oil cooler outlet temperature ≅110 °F. An oil filter is located on the outlet of the 3-way temperature control valve. This filter is used to remove any large particulate from the oil as it circulates through the system.

Objective # 7

A relief valve, on the filter outlet, is used to control system pressure, between 25 and 30 psig, and relieves back into the oil reservoir. **Several interlocks / trips are associated with lube oil pressure:**

- **The compressor will trip or will not operate with lube oil pressure <16 psig.**

Several oil system parameters are monitored on each compressor's control panel:

- Pre-lube Pump "running"
- Oil Pressure
- Oil Temperature

A dip stick is also available at the reservoir to monitor oil sump level (D VI Compressor Only). An Oil Level Gauge is used by "E" & "F" VI Compressors to monitor oil level.

Objective # 3

1.2.9 D, E, and F VI Centrifugal Air Compressor Intercooler, Aftercooler, and Moisture Separator

Located between the first and second stages of each Centrifugal Compressor are the compressor's intercooler and moisture separator. There is an after cooler and moisture separator mounted to the system after the second stage also.

The intercooler cools the first stage discharge air to within 15°F of its cooling medium, **Recirculated Cooling Water System (KR)** which is normally 90°F, prior to second stage entry. Cooling the compressor's first stage discharge air minimizes damage to the compressor's second stage compressor blades.

Objective # 3

The aftercooler cools the second stage discharge air and is capable of cooling 1500 scfm of air flow within 15°F of it's cooling medium, **Recirculated Cooling Water System (KR)** which is normally 90°F.

All this air cooling results in condensation entrainment, caused by the subsequent reduction in air dewpoint. The moisture separators use a fibrous material to separate moisture from the air and automatically discharge it to a trough through water traps.

Recirculated Cooling Water System (KR) is also used as the cooling medium for both the aftercooler and the oil cooler. The intercooler and aftercooler shell sides are continuously vented to the cooler discharge to ensure that the cooler remains full of water at all times.

The VI System is protected from overpressure by a relief valve downstream of each compressor set at 115 psig.

CLASSROOM TIME (Hours)

NLO	NLOR	LPRO	LPSO	LOR
		1.0	1.0	1.0

OBJECTIVES

	OBJECTIVE	NLO	NLOR	LPRO	LPSO	LOR
1	Explain the purpose for AP/22 (Loss of VI). AP22001			X	X	X
2	Analyze the mitigating strategy (major actions) contained in the procedure. AP22002			X	X	X
3	Given scenarios describing accident events and plant conditions, evaluate the basis for any caution, note, or step. AP22003			X	X	X
4	Given scenarios describing accident events and plant conditions, evaluate conditions which require application of continuous action steps. AP22004			X	X	X

Examination Outline Cross-reference:	Level	RO	SRO
	Tier #	2	
	Group #	1	
	K/A #	103 A4.01	
	Importance Rating	3.2	

(Ability to manually operate and/or monitor in the control room: Flow control, pressure control, and temperature control valves, including pneumatic valve controller)

Proposed Question: Common 28

The following valves are associated with control of the Containment Atmospheric conditions (i.e. Temperature and Pressure):

- 1VQ-3, Containment Air Addition Inlet from Auxiliary Building Isolation Valve
- 1VQ-4, Containment Air Release to Unit Vent

Which ONE (1) of the following describes how each of the valves can be operated from the Control Room?

	VQ-3	VQ-4
A.	Operates based on the selection of the system Mode of Operation.	Press open/close pushbuttons.
B.	Press open/close pushbuttons.	Manually adjust the output of a pneumatic controller.
C.	Press open/close pushbuttons.	Operates automatically when other system valves are opened manually.
D.	Operates automatically when other system valves are opened manually.	Manually adjust the output of a pneumatic controller.

Proposed Answer: **B**

Explanation (Optional):

VQ-3, Containment Air Addition Inlet from Auxiliary Building Isolation Valve – Pressure Control Valve. It will open when VQ-6A and VQ5B are manually

opened on a -0.20 psig Containment pressure signal to allow air to be drawn in from the Auxiliary Building.
VQ-4, Containment Air Release to Unit Vent – Flow Control Valve. It will open and close by operation of a manually operated loader.

A. Incorrect. (See Above)
B. Correct. (See Above)
C. Incorrect. Includes Press open/close pushbuttons which none of the valves have in the Control Room.
D. Incorrect. Includes Press open/close pushbuttons which none of the valves have in the Control Room.

Technical Reference(s): OP-MC-CNT-VQ p13,33 Rev 17 (Attach if not previously provided) (Including version or revision #)

Proposed references to be provided to applicants during examination: None

Learning Objective: CNT-VQ #3, 5 (As available)

Question Source: Bank # ____ Modified Bank # ____ (Note changes or attach parent) New X

Question History: Last NRC Exam NA

Question Cognitive Level: Memory or Fundamental Knowledge X
Comprehension or Analysis ____

10 CFR Part 55 Content: 55.41 7
55.43 ____

Comments:
KA is matched because item directly evaluates operation of containment pressure control valves by operation of their controls

2.0 COMPONENT DESCRIPTION

2.1 PAC Filters

The VQ filters are PAC filters. The Particulate section removes large particles. The Absolute section removes small particulate while the Charcoal section removes iodine. A local pressure gauge to indicate D/P across the filters is checked on the Unit #2 Auxiliary Building rounds sheets for the 767' elevation. A satisfactory reading is less than or equal to 3.4 inches WC. When a filter D/P reaches 6.0 inches WC, the other filter is placed in service. Normally only one filter is in service at a time.

2.2 Valves

Objective # 5

VQ-1A (Inside) and **VQ-2B** (outside) "Containment Air Release Isolation" valves are air operated diaphragm valves operated from the Control Room on MC-11 to align the release flow path. This valve will fail closed on a loss of air. These valves will auto close on:

1) S_T (phase "A" isolation)

2) S_H (containment ventilation isolation)

VQ-3 "Containment Air Addition Inlet from Auxiliary Building Isolation Valve" is a piston operated gate valve. This valve is manually opened with VQ-6A and VQ5B on a -0.20 psig Containment pressure signal to allow air to be drawn in from the Auxiliary Building. VQ-3 fails closed on a loss of air.

Objective #6

VQ-4 "Containment Air Release to Unit Vent" is an air operated gate valve which has a manually operated loader with open/close indication located on MC-9 **(refer to Drawing 7.3)**. This valve is adjusted to control the release rate. This valve will fail closed on a loss of air.

VQ-5B(outside) and **VQ-6A**(inside) "Containment Air Addition Isolation" valves are air operated diaphragm valves operated from the Control Room on MC-11 to align the flow path for air addition. This valve will fail closed on a loss of air. These valves will auto close on:

1) S_T

2) S_H

7.3 VQ-4 Controller and Indication (09/25/97)

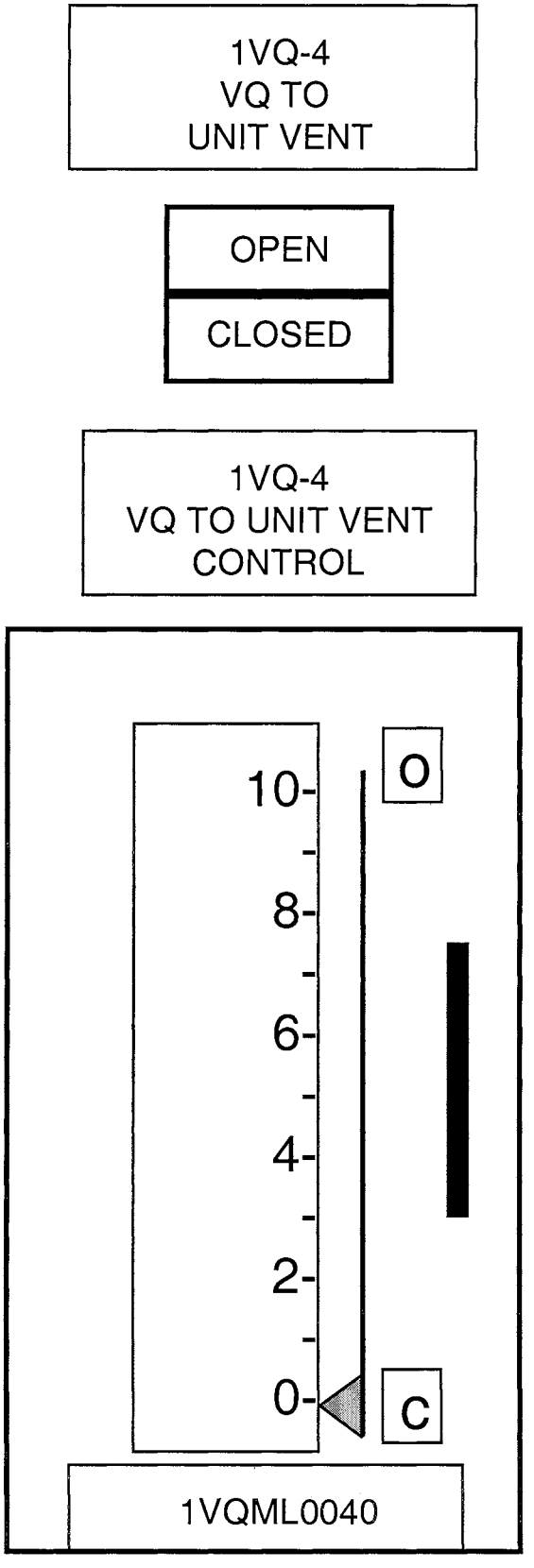

CLASSROOM TIME (Hours)

NLO	NLOR	LPRO	LPSO	LOR
1	1	1	1	1

OBJECTIVES

	OBJECTIVE	NLO	NLOR	LPRO	LPSO	LOR
1	State the purpose of the Containment Air Release and Addition System (VQ).	X	X	X	X	
2	Draw the VQ System per Drawing 7.1 and/or describe the flow path for addition and release.	X	X	X	X	
3	Describe the normal operating conditions which will result in containment pressure increases or decreases (excluding primary and secondary leaks).	X	X	X	X	
4	State why air removal is from lower containment and air addition is to upper containment.	X	X	X	X	
5	State which signals will isolate the VQ System.	X	X	X	X	X
6	Describe the Control Room instrumentation and controls associated with the VQ System.			X	X	X
7	Given a limit and/or precaution associated with the VQ System, discuss it's basis and when it applies.	X	X	X	X	X
8	State the differences between a VQ release with the totalizer operable versus a release with the totalizer inoperable.			X	X	X

Examination Outline Cross-reference:	Level	RO	SRO
	Tier #	2	
	Group #	2	
	K/A #	014 K4.03	
	Importance Rating	3.2	

(Knowledge of RPIS design feature(s) and/or interlock(s) which provide for the following: Rod Bottom Lights)

Proposed Question: Common 29

Given the following plant conditions:

- Unit 1 Reactor Startup in progress, withdrawing Control Bank A in "MANUAL"
- Control Bank A rod positions are currently at 180 steps.
- Assume proper rod withdrawal sequencing and bank overlap.
- Control Bank B, rod F-2 drops into the core.

Which ONE (1) of the following provides the resulting DRPI indications associated with Control Rod F-2?

A. Rod F-2 displayed as Green bar with an Orange background, with a Green DRPI Rod Bottom (RB) light.

B. Rod F-2 displayed as Green bar with an Orange background, with a Red DRPI Rod Bottom (RB) light.

C. Rod F-2 displayed as Red bar with a Black background, with a Green DRPI Rod Bottom (RB) light.

D. Rod F-2 displayed as Red bar with a Black background, with a Red DRPI Rod Bottom (RB) light.

Proposed Answer: **A**

Explanation (Optional):

A. Correct. There is no indication of Data A or B failure so Rod position Bar is Green. There is > 12 Step deviation between Rod F-2 and other Control Rods in Bank B, so Orange Background. There is no indication of Data A or B failure so RB light is Green

B. Incorrect. First part is correct but rod bottom indication is green.

C. Incorrect. Correct if Bank A is at 124 steps (< 8 Step deviation of F-2 from

others in Bank B).

D. Incorrect. Red Bar and RB would be displayed if Data Failure on A and B, but RB light is green, not red.

Technical Reference(s)	OP-MC-IC-EDA p37, Rev 13	(Attach if not previously provided)
	OP-MC-IC-IRE p49, Rev 19	(Including version or revision #)

Proposed references to be provided to applicants during examination: _____

Learning Objective: IC-EDA #7 (As available)

Question Source:	Bank #	_____	
	Modified Bank #	McGuire Bank #2970	(Note changes or attach parent)
	New	_____	

Question History: Last NRC Exam NA

Question Cognitive Level:	Memory or Fundamental Knowledge	_____
	Comprehension or Analysis	X

10 CFR Part 55 Content:	55.41	6
	55.43	_____

Comments:

KA is matched because indication for rob bottom is directly evaluated. Item further discriminates by evaluating additional indications for dropped rod

Question 2970 ICEDA023 ICEDA023
1 Pt Given the following plant conditions:
Unit 1 Reactor Startup in progress, withdrawing Control Bank A in "MANUAL".
Control Bank A rod positions are currently at 180 steps.
Assume proper rod withdrawal sequencing and bank overlap.
Control Bank B, rod F-2 drops into the core.

Which ONE (1) of the following provides the expected indications associated with this dropped rod?

A. RPI at Bottom Rod Drop Annunciator Alarm with a green DRPI Rod Bottom (RB) light for rod F-2.

B. RPI Non-Urgent Failure Annunciator Alarm with a red DRPI Rod Bottom (RB) light for rod F-2.

C. RPI at Bottom >1 Rod Dropped Annunciator Alarm with a green DRPI Rod Bottom LED for rod F-2.

D. RPI at Bottom >1 Rod Dropped Annunciator Alarm with a red DRPI Rod Bottom (RB) light for rod F-2.

.
Answer 2970 A

6.0 SUMMARY

Review the objectives

Review the table below for DRPI operation:

EVENT	ANNUNCIATORS	CRT DISPLAY	ACTUAL	OPERATOR ACTION
Normal	NONE	All rods green	± 4 from ind.	NONE
Data A Fail On ≥1 rod	RPI Non-Urgent Failure	Affected rod(s)Yellow, "DATA A FAILURE" yellow yellow "A" above rod(s)	Affected rod(s) +/- 12 from ind.	Select ""A + B DATA" or "B DATA ONLY"
Data B Fail On ≥1 rod	RPI Non-Urgent Failure	Affected rod(s)Yellow, "DATA B FAILURE" yellow yellow "B" above rod(s)	Affected rod(s) +/- 12 from ind.	Select ""A + B DATA" or "A DATA ONLY"
Data A and B Fail On ≥1 rod	RPI Non-Urgent RPI Urgent RPI at Bottom Rod Drop	Affected rod(s)red & @ 0, "DATA A FAILURE" yellow "DATA B FAILURE" yellow "URGENT ALARM" red red "U" above rod(s)	Affected rod(s) indicated position is shown "0". Actual could be anywhere	Declare DRPI "INOPERABLE" for the affected rod(s)"
Data A and B disagree (B > A, or A more than 1 > B) On ≥1 rod	RPI Non-Urgent Very likely to get RPI Urgent Failure" due to a >12 step deviation indicated	Affected rod(s)yellow, Very likely will get orange background on affected rod(s) and "DEVIATION > 12 STEPS" and so also "URGENT ALARM"	Very likely one trains data is correct, and so would be +/- 12 Steps using that train.	Select the train of data that appears correct. If neither train is correct, declare DRPI INOPERABLE
Rod(s) ≥ 12 steps from other rods in same bank	RPI Urgent Failure	Orange background on affected rod(s), "DEVIATION > 12 STEPS" and so also "URGENT ALARM	Affected rod(s) green and ± 4 from ind.	AP/14 to re-align the rod(s)
Dropped rod(s)	RPI Urgent Failure RPI at Bottom Rod Drop Likely Rod Control Urgent Failure	Orange background on affected rod(s), "DEVIATION > 12 STEPS", so also "URGENT ALARM and green "RB" light lit	Affected rod(s) green and ± 4 from ind.	AP/14) If > 1 rod, manually trip & E-0
Ejected rod	RPI Urgent Failure RPI at Bottom Rod Drop Likely Rod Control Urgent Failure	Affected rod red, red "U" above rod, red "RB" light lit Orange background on affected rod, "DEVIATION > 12 STEPS" and so also "URGENT ALARM	Affected rod has no indication, defaults to "0".	E-0
Loss of KRA	RPI on Emerg Power	Potential momentary loss of left CRT Display All rods Yellow Rod height avg of A+B	Affected rod(s) +/- 12 Steps from ind. (using B Data only)	Select "B DATA ONLY"
Loss of KRB	RPI Non-Urgent Failure	Loss of the right CRT Display All rods Yellow, "DATA B FAILURE" yellow yellow "B" above rod(s)	Affected rod(s) +/- 12 Steps from ind.	Select ""A + B DATA" or "A DATA ONLY"

7.0 DRAWINGS

7.4. Bank Overlap (05/11/05)

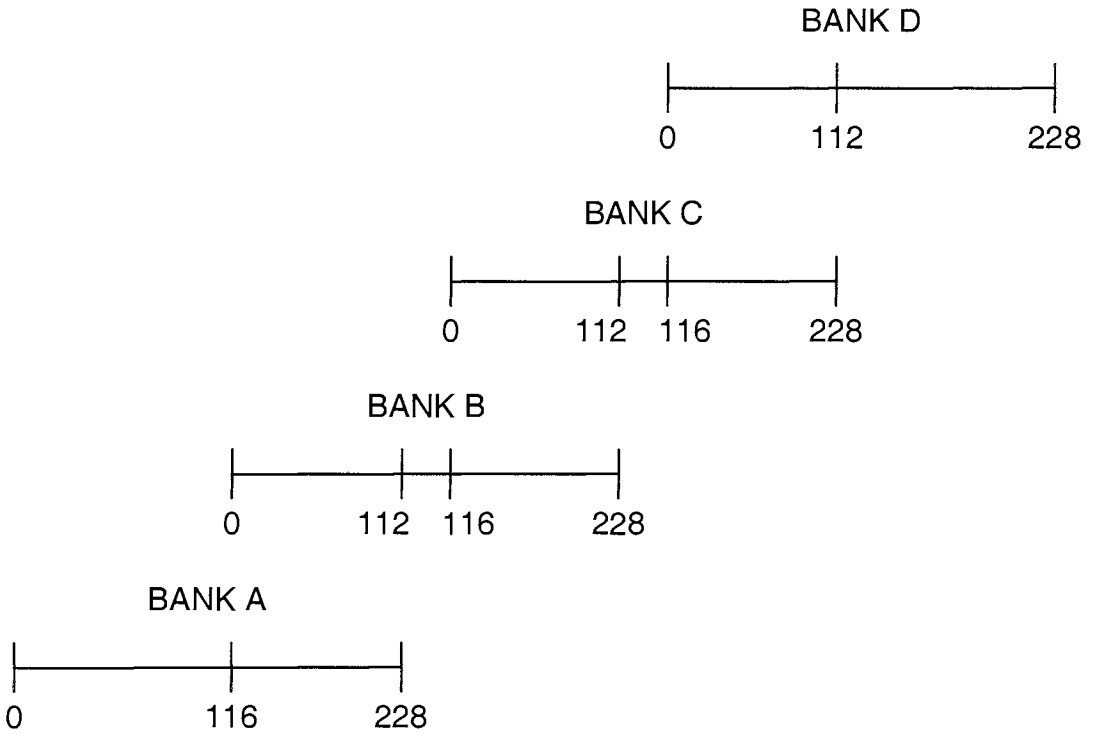

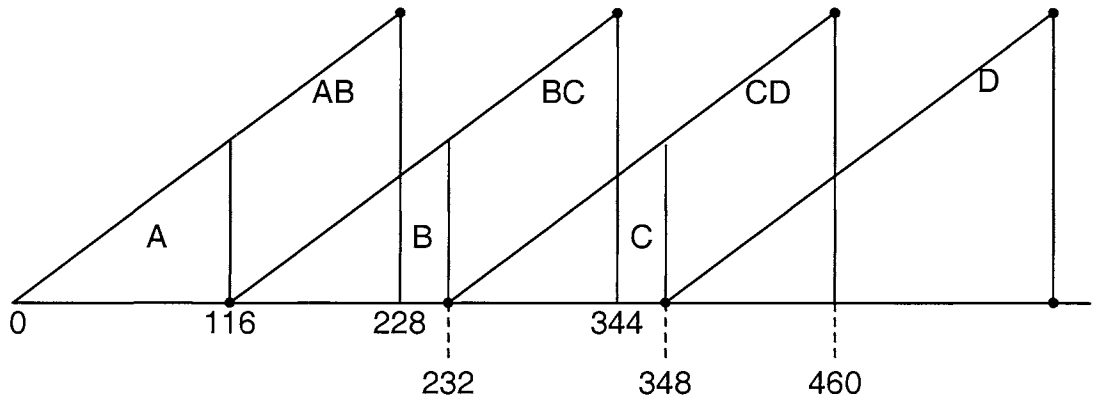

CLASSROOM TIME (Hours)

NLO	NLOR	LPRO	LPSO	LOR
NA	1	1	1	1

OBJECTIVES

	OBJECTIVE	NLO	NLOR	LPRO	LPSO	LOR
1.	State the purpose Digital Rod Position Indication System.		X	X	X	X
2.	Explain the purpose and operation of the Detectors (coils).		X	X	X	X
3.	Explain the purpose and operation of the Data Cabinets.		X	X	X	X
4.	Explain the purpose and operation of the DRPI Computer and the OAC DRPI Program.		X	X	X	X
5.	Explain the purpose and operation of the Control Board Displays.		X	X	X	X
6.	Discuss the causes and effect on the accuracy of the displayed rod position for the Alarms indicated on the Control Board Displays.			X	X	X
7.	State what conditions would generate a Rod Bottom Light for a given Rod under normal and abnormal system operation.			X	X	X
8.	State what conditions would generate a Urgent Alarm for a given Rod on the Control Board Displays or the Annunciator.			X	X	X
9.	Explain the operation of the "RPI at Bottom Rod Drop" annunciator during a Reactor start up. (beginning with all rods, shutdown and control banks on the bottom)			X	X	X

Examination Outline Cross-reference:	Level	RO	SRO
	Tier #	2	
	Group #	2	
	K/A #	017 K6.01	
	Importance Rating	2.7	

(Knowledge of the effect of a loss or malfunction of the following ITM system components: Sensors and detectors)

Proposed Question: Common 30

Which ONE (1) of the following malfunctions will cause the Train A ICCM Subcooling Margin Monitor to indicate MORE subcooling than actual?

A. 1 of 3 Loop C NR Thot instruments fails low.

B. Loop D Wide Range Tcold fails low.

C. Loop D Wide Range Pressure fails high.

D. The controlling Pressurizer Pressure instrument fails high.

Proposed Answer: **C**

Explanation (Optional):

Subcooled Margin is calculated by Tsat NC – Tactual NC = °F NC System Subcooled

A. Incorrect. The SCM Monitor uses an average of the five highest CETs when comparing actual Core Exit temperature to Tsat. When the highest reading CET fails low, it will be removed from the five highest CET readings and have no impact on the SCM Monitor.

B. Incorrect. The SCM Monitor monitors NC temperature using the five highest CETs (average) and WR Thot to calculate NC Subcooled Margin. This failure has no effect on the SCM Monitor readings.

C. Correct. Loop D WR Pressure is used to determine Tsat for the NC System. If it fails high Tsat will appear higher than normal, and the variance between it and the Actual NC System Temperature will increase.

D. Incorrect. The Pzr Pressure instrument does not input directly into the SCM calculation. However, a failure of this type would cause the Spray valves to open and NC System pressure (as measured by both Pzr and WR Loop pressure) to decrease. As WR Loop pressure decreases, Tsat will decrease. As Tsat decreases, the variance between it and the Actual NC System Temperature will decrease.

Technical Reference(s): OP-MC-IC-ICM p33, Rev 16 (Attach if not previously provided)
(Including version or revision #)

Proposed references to be provided to applicants during examination: None

Learning Objective: OP-MC-IC-ICM #8, 9 (As available)

Question Source:
- Bank # _____
- Modified Bank # McGuire General Bank #3174 (Note changes or attach parent)
- New _____

Question History: Last NRC Exam None

Question Cognitive Level:
- Memory or Fundamental Knowledge _____
- Comprehension or Analysis X

10 CFR Part 55 Content:
- 55.41 7
- 55.43 _____

Comments:
KA is matched because it evaluates a condition related to ICCM that will change indication on ICCM

Question 3174 ICICMR06 ICICMR06
1 Pt With Unit 1 at 100% power, 1NCLP5120 (NC loop "D" WR Pressure) fails high. Which one of the following describes the effect this will have on the ICCM (Inadequate Core Cooling Monitor)?

A. One Train of the D/P RVLIS indication is inoperable because the Normal D/P indication will fail high.

B. One Train of Incore Thermocouples is inoperable because WR Pressure is used for compensation of the temperature output.

C. One Train of the Subcooling Margin Monitor is inoperable because WR Pressure is used to calculate T-sat.

D. One Train of the Lower Range RVLIS is inoperable because it shares a common tap with the WR Pressure Loop.

Answer 3174 C

2.3 Subcooling Margin Monitor

Objective # 9

This monitor calculates and displays the subcooling margin of the average of the 5 highest T/Cs and two loop wide range T_h and provides alarms for approaching and loss of subcooling.

The monitor calculates subcooling using the equation:

$$\text{Subcooling} = T_{sat} - T_{measured}$$

This comparison is made for:

- (T_{sat} - T/C 5 highest) = subcooling based on the average of 5 highest core exit T/Cs)
- (T_{sat} - T_h) = subcooling based on loop wide range T_h

The monitor determines T_{sat} by using wide range loop pressure and then adjusts the value for instrument error associated with the pressure and temperature instruments. The results is a saturation curve similar to the Data Book Curve which the operator uses if the instrument is inoperable. There are provisions for increasing the instrument error in the event containment pressure increases above 3 psig (S_P). This provision is <u>not used at present</u> since the pressure transmitters are located outside containment and would not be exposed to a hostile environment.

Inputs to the subcooling monitor are: (refer to Drawing 7.2)

- wide range loop pressure (loop "D" for Train A ICCM and loop "C" for Train B) from the 7300 Process Control System.
- average of the 5 highest T/Cs from the core exit thermocouple monitor calculation
- wide range Th (Train A ICCM uses loops "C" and "D" while Train B uses loops "A" and "B") from the 7300 Process Control System
- phase B contact is used to indicate that containment pressure is greater than 3 psi. This provides the monitor with the capability of changing the T_{sat} curve to account for post accident instrument uncertainty however, this function is not used since the displayed curves are the post-accident values.

The subcooling monitor provides the following Control Room Annunciators:

1) <u>Subcooling Margin Alert</u> (AD2-D4) This alarm is driven by the train A ICCM only. It will alarm under the following conditions:
   - 2^0F subcooling from average of 5 T/Cs or either WR Th
2) <u>Loss of Subcooling</u> (AD2-D5) This alarm is driven by the train A ICCM only. It will alarm under the following condition:
   - 0^0F subcooling from the average of the 5 highest T/Cs or, 0^0F subcooling from either WR T_h

<u>INSTRUCTOR ACTIVITY</u>

SEQ	OBJECTIVE	NLO	NLOR	LPRO	LPSO	LOR
6	Describe the three RVLIS Ranges of indication in terms of: • The relationship to RCS inventory and void content • Instrument span • Indication provided • Units of indication • The conditions under which each range provides valid indication, including whether or not a particular range is valid during natural circulation ICICM006		X	X	X	X
7	List the parameters used by the ICCM to calculate the RVLIS indication and briefly explain the purpose of each. ICICM007		X	X	X	X

8	Describe the Core Exit Thermocouple Monitor function in terms of:
	• Number of T/Cs and allotment per train
	• Reference junction temperature compensation
	• Indicated parameters:
	  • Quadrant maximum, minimum, and average
	  • 5 highest T/Cs
	  • Average of 5 highest T/Cs
	• Range of indication
	ICICM008
			X	X	X	X

9	Describe the Subcooling Margin Monitor Function of the ICCM in terms of: • Parameters used to determine subcooling margin for each train • Indication provided • Instrument uncertainty correction • Range of indication • Alarms provided ICICM009		X	X	X	X

Examination Outline Cross-reference:	Level	RO	SRO
	Tier #	2	
	Group #	2	
	K/A #	015 K2.01	
	Importance Rating	3.3	

(Knowledge of bus power supplies to the following: NIS channels, components, and interconnections)

Proposed Question: Common 31

The following conditions exist on Unit 1:

- A Reactor Startup is in progress.
- Power level is 1 x 10^{-8} amps.

Subsequently, 120 Vital AC Bus EKVB is lost.

Which ONE (1) of the following identifies the plant response?

A reactor trip will occur due to loss of...

A. IR NI-35; SR NI-32 will energize

B. IR NI-35; SR NI-32 will NOT energize

C. IR NI-36; SR NI-31 will energize.

D. IR NI-36; SR NI-31 will NOT energize.

Proposed Answer: **C**

Explanation (Optional):

A. Incorrect. Loss of EKVB will result in a loss of Channel II, which will de-energize SR N-32 and IR N-36.

B. Incorrect. N-35 still has power. N-36 bistable causes reactor trip when it de-energizes. Second hlf is a true statement for conditions presented

C. Correct.

D. Incorrect. First part is correct but second part is incorrect because SR N-31 will still have power. Also possible to confuse P-6 and whether or not EITHER SR instruments will automatically energize post-trip.

Technical Reference(s): OP-MC-IC-ENB p19, 21, 23, 25, 51, 79, 81. Rev. 25 (Attach if not previously provided)

(Including version or revision #)

Proposed references to be provided to applicants during examination: None

Learning Objective: IC-ENB #4, 10, 12 (As available)

Question Source:
- Bank # X
- Modified Bank # _____ (Note changes or attach parent)
- New _____

Question History: Last NRC Exam _____

Question Cognitive Level:
- Memory or Fundamental Knowledge _____
- Comprehension or Analysis X

10 CFR Part 55 Content:
- 55.41 7
- 55.43 _____

Comments:
KA is matched at a higher cog level because item evaluates effect of loss of power on NI system, and resulting operation of NI detectors

7.0 DRAWINGS

7.1 Excore Nuclear Instrumentation System (03/20/97)

			MISC CONTROL & INDICATION
N-31 SOURCE RANGE	N-32 SOURCE RANGE		AUDIO COUNT RATE TIMER-SCALER
N-35 INTERMEDIATE RANGE	N-36 INTERMEDIATE RANGE		COMPARATOR & RATE
N-41 POWER RANGE DRAWER "A"	N-42 POWER RANGE DRAWER "A"	N-43 POWER RANGE DRAWER "A"	N-44 POWER RANGE DRAWER "A"
N-41 POWER RANGE DRAWER "B"	N-42 POWER RANGE DRAWER "B"	N-43 POWER RANGE DRAWER "B"	N-44 POWER RANGE DRAWER "B"
TERMINAL BLOCKS			

The Pulse Shaper shapes pulses into uniform square waves.

The Pulse Driver matches impedance between the Pulse Shaper and the Log Pulse Integrator.

The Log Pulse Integrator changes the pulse signal to a voltage output proportional to logarithm of pulse rate.

The Level Amplifier amplifies the signal from the Log Pulse Integrator to drive bistables, indicators and other circuits.

A Bistable Relay Driver provides the "**High Flux at Shutdown**" Alarm and the "**Containment Evacuation**" Alarm whenever the source range counts exceed the setpoint. Another Bistable Relay Driver provides the "**High Level Trip**" signal (10^5 cps).

An isolation amplifier feeds the OAC, SUR Circuitry, Control Board Meter, and the NR-45 Chart Recorder.

2.1.3 Source Range Outputs

Both Source Range channels read out on the Control Board with a range of 10^0 to 10^6 counts per second (cps). The Source Range level can be monitored on the NR-45 Control Room Chart Recorder. In addition to counts per second, Source Range Start-up Rate (SUR) is indicated for each channel in decades per minute (-0.5 to 5.0 DPM).

The High Flux at Shutdown alarm actuates when source range level reaches the setpoint of one half decade above normal shutdown counts. High Flux at Shutdown also actuates the Containment evacuation alarm inside the containment. A 5 second time delay precludes short duration spikes from actuating the Hi Flux at Shutdown and Containment Evacuation alarms.

2.1.4 Source Range Drawer Panel (Reference **Figure 7.5**).

Objective # 8

Detector Volts Meter - Indicates high voltage supplied to proportional counter detector.

Neutron Level Meter - Scale 10^0 to 10^6 cps.

Instrument Power "ON" Lamp - 118 volts AC Instrument power applied to drawer.

Control Power "ON" Lamp - 118 volts AC Control Power applied to drawer.

Channel "On Test" Lamp - Indicates the operation selector switch is in a position other than "NORMAL".

Loss of Detector Volt Lamp - Indicates high voltage to detector off or low.

Level Trip Lamp - indicates neutron level greater than trip setpoint in Source Range.(10^5 cps)

Level Trip Bypass Lamp - On when Level Trip switch in "Bypass" for test or calibration.

High Flux at Shutdown Lamp - Neutron level greater than 1/2 decade above normal shutdown level in Mode 6 and $\leq$ 5 times shutdown level in Modes 3,4&5.

Bistable Trip Spare Lamp - No function.

Instrument Power Fuses - Overcurrent protection for power supply circuits. Instrument power supplies the meters, circuit processing components, high voltage supply and detector power. This is true for the IR and PR drawers/circuits also.

Control Power Fuses - Overcurrent protection for control signal circuit transformers. Control power supplies the lights on the drawer and 118 VAC to the bistable relay drivers to the plant relays. (High flux at shutdown alarm and SR high level trip). This is true for the IR and PR drawers/circuits also.

NOTE (Reference **Figure 7.21**): If either instrument or control power fuses are removed, the bistables will trip. Level Trip Bypass will prevent bistable trip for Instrument Power fuses only.

Objective # 10

Level Trip Switch - Two position switch: Normal - Switch Inactive; Bypass - Enables Operation Selector Switch for test and calibration; Provides AC signal to prevent Rx trip signal during testing.

Operation Selector Switch - Eight position switch enabled by Level Trip Switch to 'Bypass' position. Channel On Test lamp lights when not in Normal. Normal - Switch Inactive; Six Test Positions with Preset cps test values; Level Adjust - Level Adjust Potentiometer in circuit.

Level Adjust Potentiometer - Adjustable test signal into level amp. - Enables adjustment of the trip level of various bistables.

Objective # 10

High Flux at Shutdown Switch - Two position switch. Normal -allows circuit to provide "High Flux at Shutdown" and "Containment Evacuation" alarm when setpoint is exceeded; Block-used during startup - Blocks High Flux at Shutdown Alarm and Containment Evacuation Alarm.

2.2 Intermediate Range

2.2.1 Intermediate Range Detectors

Objective # 6

Reference **Figure 7.6**. Both intermediate range channels use compensated ion chambers to determine reactor power. These detectors are located just above the source range detectors in the same housing. The compensated ion chamber (CIC) uses two concentric Nitrogen gas filled, volumes: the "outer" is sensitive to both neutrons and gamma (boron lined); the "inner" sensitive only to gamma. As the two volumes are mounted concentrically in one unit, both are in essentially the same radiation field. By placing a negative potential on the inner lead, the gamma signal generated in the inner volume is made to compensate or cancel out the gamma signal generated in the outer volume. Since the two volumes can not be manufactured exactly the same size, the high voltage to the center electrode is variable to adjust the sensitivity of the inner volume. Operating in the recombination region, a change in inner volume detector voltage will vary the gamma current for a given flux level. The outer volume operates in the ion chamber region where all the ion pairs are collected.

Objective # 5

Gamma radiation becomes a smaller percentage of the detector interactions as power increases and becomes insignificant after 10^{-9} amps (first two decades). Above this power level gamma compensation is no longer required for accurate indication.

2.2.2 Over Compensation And Under Compensation

Objective # 7

Reference **Figure 7.7**. With the inner chamber voltage set properly, inner chamber gamma current will exactly match outer chamber gamma current and the two will cancel leaving only the neutron current. With inner chamber voltage set too high, inner chamber current will exceed outer chamber gamma current canceling all gamma current plus some of the neutron current. This is "over-compensation". The following are consequences of **over-compensation**:

- The indicated power level will read lower than the actual power level.
- The intermediate range instrument will "come on scale" at a higher source range level producing less overlap between the two ranges.
- During startup, the P-6 permissive will be received later, at a higher actual neutron flux level and the source range will be closer to the 10^5 cps, Hi Level Trip setpoint.
- After a Reactor Trip, power will decay to the P-6 reset sooner than normal.
- Initially, indicated SUR will be higher than actual SUR.

The effects of improper compensation are much more pronounced at low power and become a non-factor prior to taking critical data at 10^{-8} amps.

With inner chamber voltage set too low, inner chamber current will be less than outer chamber gamma current, canceling only a portion of the gamma current. This is "under-compensation". The following are consequences of **under-compensation**:

- The indicated power level will read higher than the actual power level.
- The intermediate range instrument will "come on scale" at a lower source range level producing more overlap between the two ranges.
- During startup, the P-6 permissive will be received earlier, at a lower actual neutron flux level.
- After a Reactor Trip, power will decay to the P-6 reset later than normal and may prevent automatic re-energizing of the source range detectors.
- Initially, indicated SUR will be lower than actual SUR.

2.2.3 Intermediate Range Circuitry

Objective # 4

Reference **Figure 7.8**. The Intermediate Range should normally start to indicate power at a Source Range power level of 10^3 cps and the Source Range should be blocked by the time level is 10^4 cps and Intermediate level is at 10^{-10} amps. The indicating range for the Intermediate Range instrument is 10^{-11} to 10^{-3} amps, which overlaps the entire power range.

The current flow from the intermediate range detectors is too low to be used directly for control purposes so the output feeds a log level amplifier (log amp) for conversion to a usable voltage. The log level amplifier also converts the detector signal to a logarithmic output and drives the bistables, indicators and other circuits.

Bistable Relay Drivers provide the "**P-6 Permissive**," the "**Low Power Rod Stop**" and the "**Reactor Trip**" whenever the intermediate range amps exceed the setpoint. An isolation amplifier feeds the OAC, SUR Circuitry, Control Board Meter, and the NR-45 Chart Recorder.

2.2.4 Intermediate Range Outputs

Both Intermediate range channels read out on the Control Board with a range of 10^{-11} to 10^{-3} amps. The Intermediate Range level can be monitored on the NR-45 Control Room Chart Recorder. In addition to counts per second, Intermediate Range Start-Up Rate (SUR) is indicated for each channel in decades per minute (-0.5 to 5.0 DPM).

The **P-6 Source Range Block Permissive** actuates when **"1-out-of-2" (1/2) IR channels exceeds 10^{-10} amps**.

The **Low Power Rod Stop** prevents outward motion of the rods in Auto and Manual when **1/2 IR channels exceeds amps equivalent to 20% reactor power**.

The **Low Power Reactor Trip** protects the core from startup accidents when **1/2 IR channels exceeds amps equivalent to 25% reactor power**.

2.2.5 Intermediate Range Drawer Panel (Reference **Figure 7.9**).

Objective # 8

Ampere Neutron Level Meter - Indicates current output of detector in amps with a range of eight decades (10^{-11} to 10^{-3} amps)

Instrument Power "ON" Lamp - 118 volt AC instrument power is applied to drawer.

Control Power "ON" Lamp - 118 volt AC control power is applied to driver assembly control circuits.

Channel On Test Lamp - Indicates Operation Selector switch is in a position other than "NORMAL".

Level Trip Bypass Lamp - Indicates Level Trip switch in "BYPASS" position.

High Level Trip Lamp - ON when neutron flux in IR exceeds current equivalent to 25% full power. (Approximately 5.5×10^{-5} amp).

High Level Rod Stop lamp - ON when IR current equivalent to 20% full power.

Power Above Permissive P-6 Lamp - Lights when IR reaches 10^{-10} amps. **Allows blocking Source Range Instruments**.

Loss of Detector Volt Lamp - Indicates low or loss of high voltage to detector.

Loss of Comp. Volt Lamp - Indicates loss of compensating voltage to detector.

AC Inst. Power Fuses - Overcurrent protection for instrument power.

AC Control Power Fuses - Overcurrent protection for control power.

NOTE (Reference **Figure 7.21**): If either instrument or control power fuses are removed, the bistables will trip. Level Trip Bypass will prevent bistable trip for Instrument Power fuses only.

3.1.4 Setpoints

Objective # 11, 12

- SR High Flux at Shutdown - 1/2 channels 0.5 decade above shutdown counts in Mode 6 (TS Basis 3.9.3) and $\leq$ 5 times shutdown background counts in Modes 3,4&5 (TS Basis 3.3.1).
- SR High Flux Level Rx Trip - 1/2 channels greater than 10^5 cps.
- IR **P-6** - 1/2 channels greater than 10^{-10} Amps, resets at $7X10^{-11}$ amps decreasing. Requires 2/2 channels < setpoint to reset.
- IR High Flux Rod Stop **C-1** - 1/2 channels current equivalent to greater than 20% power.
- IR High Flux Level Rx Trip - 1/2 channels current equivalent to 25% power.
- Power Range Permissive **P-10** - 2/4 channels $\geq$ 10% power, resets when 3/4 channels < 10% power (Actual values are 10.5% increasing and 9.5% decreasing power).
- PR Rx Trip Low Range - 2/4 channels $\geq$ 25% power.
- PR Permissive **P-8** - 2/4 channels $\geq$ 48% power, resets when 3/4 channels < 48% power.
- PR Permissive **C-2** - 1/4 channels $\geq$ 103% power.
- PR Overpower Trip High Range - 2/4 channels $\geq$ 109% power.
- PR Positive Rate Trip - 2/4 channels $\geq$ +5% power in 2 seconds.
- PR Channel Deviation - Deviation between Channels.
- PR Upper Section Deviation - Deviation between Upper Detectors and the average of all the Upper Detectors.
- PR Lower Section Deviation - Deviation between Lower Detectors and the average of all the Lower Detectors.

NOTE: For a complete listing of the Protection Permissive Interlocks and Control Permissive Interlocks ("Ps" and "Cs") see the Reactor Protection Lesson Plan (IC-IPE).

7.2 Operating Ranges (01/09/02)

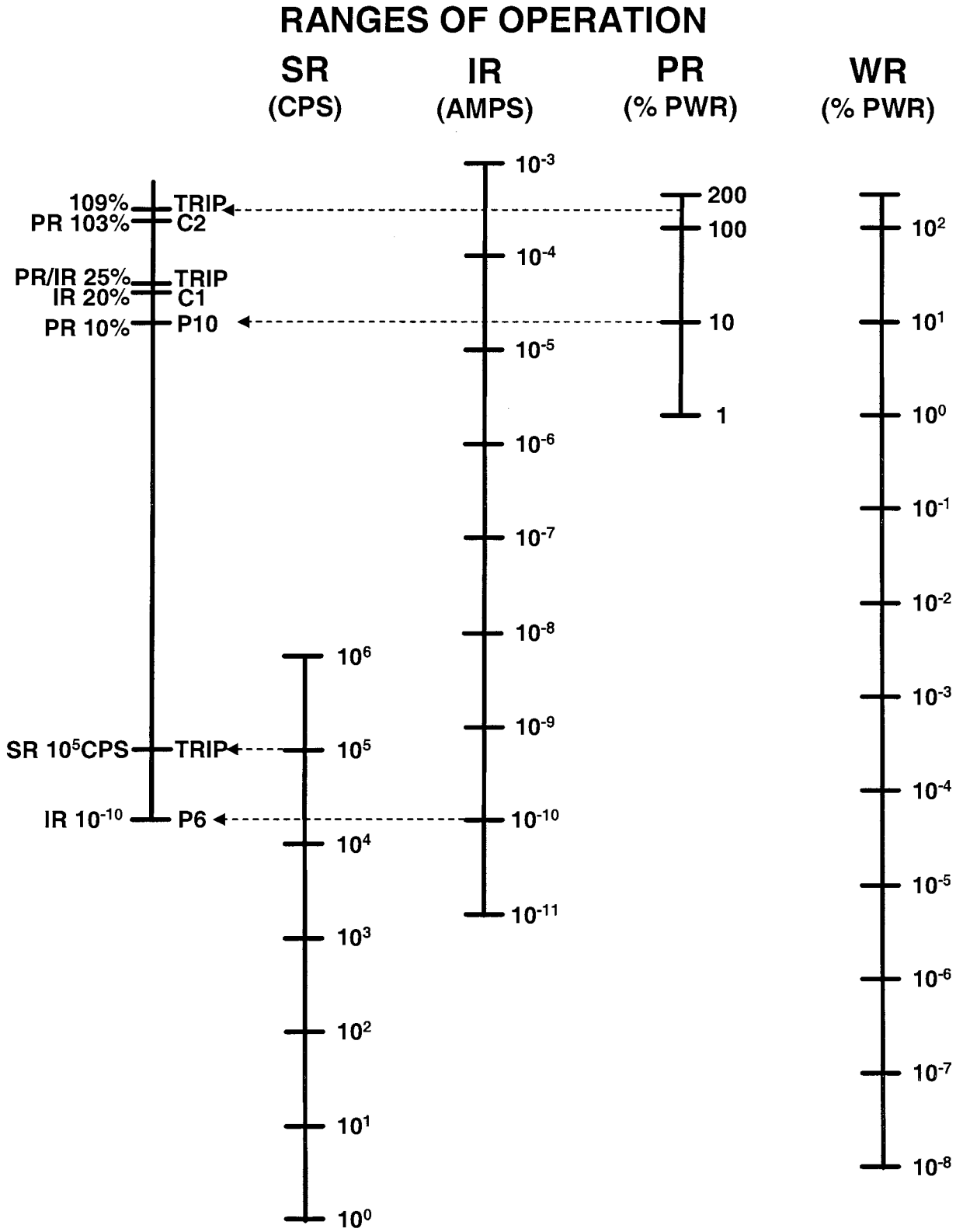

CLASSROOM TIME (Hours)

NLO	NLOR	LPRO	LPSO	LOR
	2.0	3.0	3.0	2.0

OBJECTIVES

	OBJECTIVE	NLO	NLOR	LPRO	LPSO	LOR
1	State the purpose of the Nuclear Instrumentation System.		X	X	X	
2	Explain why it is necessary to use three ranges of Excore Nuclear Instrumentation.		X	X	X	
3	Explain the operation of the detector used in each range of instrumentation.		X	X	X	
4	Sketch the outputs of each range of Nuclear Instrumentation, to include all indication, control and protective circuits.		X	X	X	
5	Explain why gamma compensation is necessary in the Source Range and Intermediate Range but not in the Power Range.		X	X	X	
6	Describe the methods of gamma compensation used by the Source and Intermediate Ranges.		X	X	X	
7	Describe the effects of 'over' and 'under' compensation on the Intermediate Range.		X	X	X	
8	Explain the functions of the control switches for each range of Nuclear Instrumentation.		X	X	X	X
9	Concerning the channel current comparator and detector current comparator:					
	• Explain the function of each.		X	X	X	
	• List the alarm setpoints for each.		X	X	X	X
10	Explain the functions of all related bypass and block switches on the Nuclear Instrumentation miscellaneous panels.		X	X	X	X
11	List the Reactor Trips associated with the Nuclear Instrumentation System. (Include setpoints, logic and interlocks)		X	X	X	X

12	List the Protection and Control Interlocks (Ps and Cs) associated with the Nuclear Instrumentation System. (Include setpoints and logic)		X	X	X	X
13	State the purpose of the Wide Range Neutron Detection System.		X	X	X	
14	Concerning the Wide Range Neutron Detection System:					
	• Describe the operation.		X	X	X	
	• Describe the indications and controls.		X	X	X	X
15	State the purpose of the Gamma-Metrics Shutdown Monitor System.		X	X	X	
16	Concerning the Gamma-Metrics Shutdown Monitor System:					
	• Describe the operation.		X	X	X	
	• Describe the alarms, indications and controls.		X	X	X	X
17	Determine the validity of indicated reactor power using alternate indications of power level.		X	X	X	X
18	Describe the Source Range instrumentation response for voiding in the core and downcomer region.		X	X	X	X
19	Concerning the Technical Specifications related to the Nuclear Instrumentation System;					
	• Given the LCO title, state the LCO (including any COLR values) and applicability.			X	X	X
	• For any LCO's that have action required within one hour, state the action.			X	X	X
	• Given a set of parameter values or system conditions, determine if any Tech Spec LCO's is(are) not met and any action(s) required within one hour.			X	X	X
	• Given a set of plant parameters or system conditions and the appropriate Tech Specs, determine required action(s).			X	X	X
	• Discuss the basis for a given Tech Spec LCO or Safety Limit.				X	*
	* SRO Only					

Examination Outline Cross-reference:	Level	RO	SRO
	Tier #	2	
	Group #	2	
	K/A #	028 K1.01	
	Importance Rating	2.5	

(Knowledge of the physical connections and/or cause-effect relationships between the HRPS and the following systems: Containment annulus ventilation system (including pressure limits))

Proposed Question: Common 32

A Large Break LOCA has occurred on Unit 2, the Technical Support Center has recommended the startup of the H_2 Purge System.

The operator then takes action to place the system in service in accordance with OP/1/A/6450/010, "Operation of the Hydrogen Skimmer, Containment Air Return and Hydrogen Purge System."

Which ONE (1) of the following describes the **initial response** of annulus pressure to this action, and the annulus **pressure range** which must be maintained?

A. Increase, maintained at -1.2 to -4.2 "H_2O.

B. Increase, maintained at -5.5 to -7.0 "H_2O.

C. Decrease, maintained at -1.2 to -4.2 "H_2O.

D. Decrease, maintained at -5.5 to -7.0 "H_2O.

Proposed Answer: **A**

Explanation (Optional):

A. Correct. According to Section 1.2 of OP-MC-CNT-VE, the Hydrogen Purge System assists in the reduction of H_2 buildup in containment following a LOCA by diluting the containment atmosphere with outside air and venting it back to the annulus. The H_2 Blower takes a suction on the outside atmosphere and discharges the air into containment. A separate return line vents the air from containment into the annulus area. With this arrangement, air will enter the Annulus from the Containment when the system is placed in service increasing the Annulus pressure.

According to Section 3.2 of OP-MC-CNT-VE, upon actuation of a containment isolation Phase B signal (S_P), each train of the VE System will discharge to the Unit Vent until Annulus pressure reaches a negative pressure of 4.2 inches WG (takes about 48 seconds). When pressure reaches -4.2 inches WG, the VE system will shift to the recirculation mode at which time pressure will began to increase. When pressure increases to -1.2 inches WG the system will shift back to the discharge mode. Cycling between the exhaust and recirculation mode will continue until the system is secured. Enclosure 4.2 of OP/1/A/6450/010, "Operation of the Hydrogen Skimmer, Containment Air Return and Hydrogen Purge System," identifies the VE system maintaining -1.2 to -4.2 "H_2O as an initial condition to placing the H2 Purge System in service. The procedure also lists the final step of placing the system in service as "slowly throttling open 1VE-9 (Cont H2 to Annulus) ensuring Annulus pressure stays in normal range."

B. Incorrect. Pressure in correct direction, wrong system pressure range. According to Section 3.2 of OP-MC-CNT-VE, Pressure transmitters monitor annulus pressure and provide inputs to the OAC. A low pressure alarm is generated at -5.5" inches WG. At -7.0 inches WG a low-low pressure alarm is generated and the respective VE Fan trips if in the exhaust mode.

C. Incorrect. Pressure in wrong direction, correct system pressure range.

D. Incorrect. Pressure in wrong direction, and incorrect system pressure range (See B).

Technical Reference(s)	OP-MC-CNT-VE p11, 19, 25, 31 Rev. 25	(Attach if not previously provided)
	OP/1/A/6450/010 Enc. 4.2, p1 of 2, Rev. 27	(Including version or revision #)

Proposed references to be provided to applicants during examination: None

Learning Objective: CNT-VE #3-7 (As available)

Question Source:	Bank #		
	Modified Bank #		(Note changes or attach parent)
	New	X	

Question History: Last NRC Exam

Question Cognitive Level: Memory or Fundamental Knowledge X

Comprehension or Analysis

10 CFR Part 55 Content:	55.41	5, 7, 14
	55.43	

Comments:
KA directly matched because annulus pressure limits are evaluated for operation of the HRPS

1.0 INTRODUCTION

1.1. Purpose

Objective #1

The Annulus Ventilation System (VE) is designed to produce and maintain a negative pressure zone in the annular space between the steel vessel (primary containment) and the Reactor Building (secondary containment). This negative pressure prevents the unfiltered leakage of radioisotopes through the Reactor Building and into the environment following a loss of coolant accident. The system also provides long-term fission product removal capability by decay and filtration.

Proper operation of this system is required to ensure that the thyroid and whole body doses at the exclusion area boundary and low population zone are within the guidelines of 10 CFR 100 following a loss of coolant accident.

Objective #2

The Containment Hydrogen Purge Subsystem provides a backup to the hydrogen recombiners for control of hydrogen concentration inside containment following a loss of coolant accident.

1.2. General Description (refer to Drawing 7.1)

The Annulus Ventilation System is one of the barriers that prevents the release of fission products to the environment, to protect the health and safety of the public. It consists of two (2) 100% redundant trains per unit. Each train consists of a fan and a filter train. Each filter train consists of a moisture eliminator, a pre-heater, a pre-filter, two High Efficiency Particulate Air (HEPA) filters, a carbon absorber, dampers and controls.

Objective #3

When an annulus ventilation fan starts, air from the annulus is drawn into the suction distribution header and flows through the filter train to the fan. The fan then discharges the filtered air to the unit vent or back into the annulus. The suction ring headers are located high in the annulus, and the discharge ring headers are located low in the annulus to ensure that any contaminated in-leakage is mixed in as large a volume of air as possible. The Annulus Ventilation System will maintain the annulus pressure between -1.2 inches WG and -4.2 inches WG by cycling between a recirculation and discharge mode of operation.

Objective #4

The Hydrogen Purge System assists in the reduction of H_2 buildup in containment following a LOCA by diluting the containment atmosphere with outside air and venting it back to the annulus. **The H_2 Blower takes a suction on the outside and discharges the air into containment. A separate return line vents the air from containment into the annulus area.**

have a higher pressure at the top of the annulus than at the same location outside and this could result in out-leakage.

2.4. H_2 Purge Blower

Objective #11

The Containment H_2 Purge Blower supplies clean air to Containment while venting the air in Containment to the annulus for removal by the Annulus Ventilation System (refer to Drawing 7.1). This can be done to maintain Containment H_2 concentration < 4%. **The Annulus Ventilation System discharges the air to the unit vent through a filtration system.** The H_2 Purge Blower is a rotary positive displacement blower which delivers 100 cfm of outside air (from Auxiliary Building) into containment. It is driven by a 3 hp, 3600 rpm, 575 volt, 3 phase, 60 Hz motor, powered from MXN. This part of the VE System is NOT assumed in our design bases.

The Containment H_2 Purge Blower is manually placed in service and secured when the Technical Support Center (TSC) makes recommendations after an accident. The Start/Stop switch for the blower is located on the Control Room HVAC panel (refer to Drawing 7.3). H_2 Purge Isolation valves close on Containment Isolation Phase A (S_T) signal. The associated Phase A (S_T) reset buttons must be reset to open these valves.

VE-9 (manual loader) must be throttled to ensure annulus pressure remains in the normal operating range (-1.2" to -4.2" of water) as indicated on the HVAC local annulus pressure gages. The manual controller is located on the Control Room HVAC Panel. CAUTION: The indication on 1VE-9 is from 0% to 100%. At 100% 1VE-9 is Fully closed. At 0% 1VE-9 is Fully opened.

2.5. Annulus Door Monitoring System (refer to Drawing 7.4)

The function of the annulus door monitoring system is to provide indication in the Control Room, via an annunciator, that an annulus door has been open for two (2) minutes. The annunciator is labeled "VE Door Open" and once the alarm is received, the operator must dispatch personnel to the Unit 1 MG Set Room to determine the exact door that has been opened. This indication will be provided by the reflash module and will be retained until the operator acknowledges the signal on the module and until the alarm signal is removed (the door is latched). Once the signal has been acknowledged the operator may leave the monitoring cabinet since the indication will be removed when the door is latched. If the door is latched prior to the operator reaching the cabinet the indication will remain until the signal has been acknowledged.

The system may be disabled with a key switch mounted on the monitoring cabinet. There are two key switches on the monitoring panel, one for each unit. When a switch is placed in the "OFF" position, inputs to the reflash module will not function, the Control Room annunciator (1AD13-A8 or 2AD13-A8) is blocked and the system enable light for the appropriate unit on the monitor panel de-energizes. The intended purpose for

3.2. Abnormal and Emergency Operation

Upon actuation of a containment isolation Phase B signal (S_P), each train of the VE System will discharge to the Unit Vent until Annulus pressure reaches a negative pressure of 4.2 inches WG (takes about 48 seconds). When pressure reaches -4.2 inches WG, the VE system will shift to the recirculation mode at which time pressure will began to increase. When pressure increases to -1.2 inches WG the system will shift back to the discharge mode. Cycling between the exhaust and recirculation mode will continue until the system is secured. The air will pass through the filters in both the discharge and recirculation modes.

Annulus Low-Low Pressure Protection

Pressure transmitters monitor annulus pressure and provide inputs to the OAC. A low pressure alarm is generated at -5.5" inches WG. At -7.0 inches WG a low-low pressure alarm is generated and the respective VE Fan trips if in the exhaust mode. The Fan will restart automatically when the low-low pressure signal resets after a 10 second time delay provided the S_P signal has not been reset. The low-low pressure controls may be bypassed by placing the VE Fan switch to "ON".

If an annulus pressure instrument is inoperable, the respective VE train is inoperable.

H_2 Purge Blower Operation (manual operation)

Start blower when TSC recommends operation of the system. Exercise caution when operating the system to prevent pressurizing annulus. Annulus pressure is controlled by VE-9 manual loader located on the Control Room HVAC Panel.

4.0 TECHNICAL SPECIFICATIONS

Objective #14

4.1 T.S. 3.6.10 Annulus Ventilation System (AVS)

Refer to current copy of T.S. #3.6.10, Annulus Ventilation System (AVS) and associated basis for further details.

NOTE: An inoperable heater does NOT make the associated VE train inoperable per the TS Bases.

4.2 T.S. 3.6.16 Reactor Building

Refer to current copy of T.S. #3.6.16, Reactor Building for further details.

7.1 Annulus Ventilation System (6/16/99)

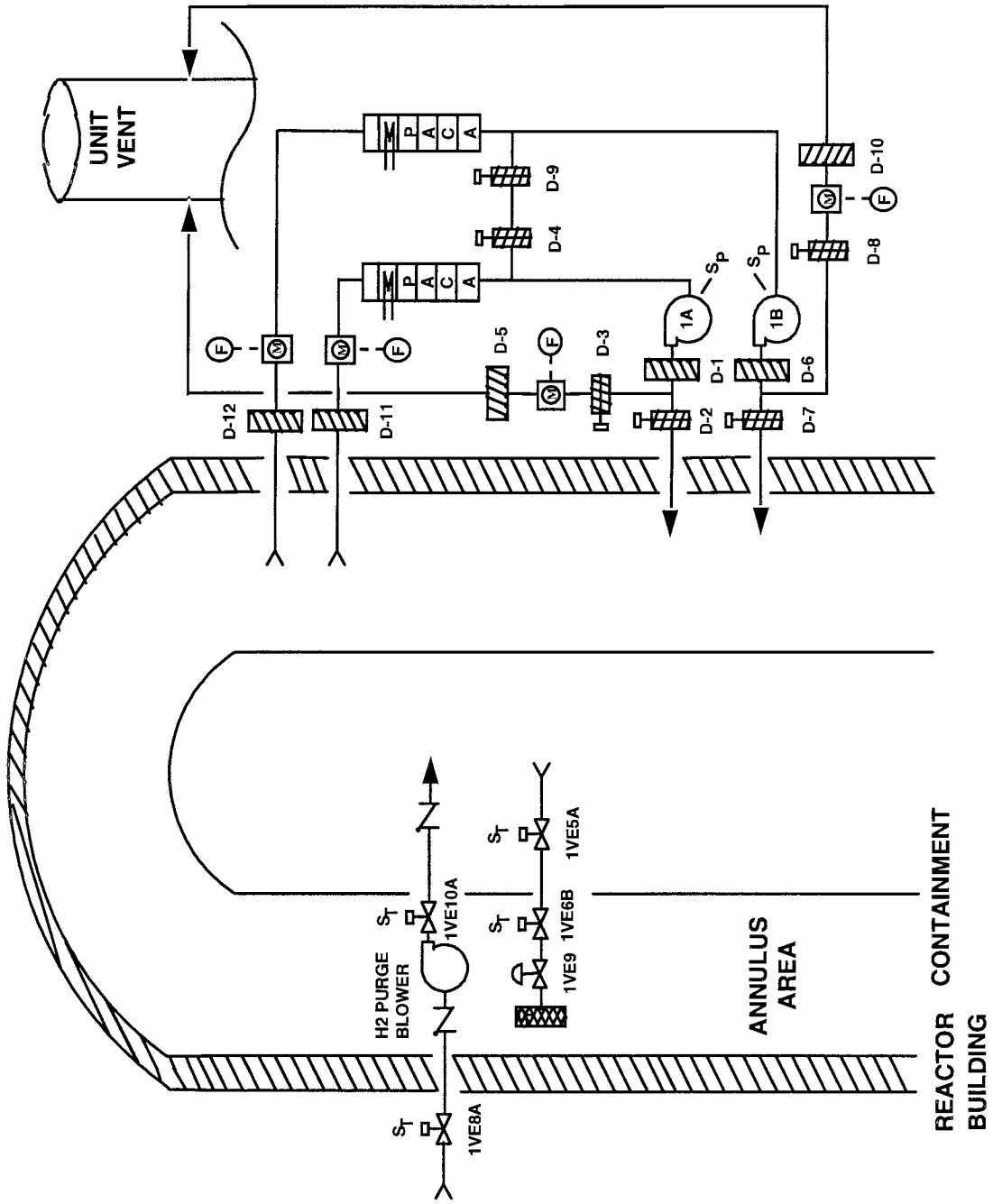

1. Limits and Precautions

1.1 Never allow H_2 concentration in containment to reach 4 percent.

1.2 Do **NOT** move ventilation balancing valves after initial valve setting as this would vary flow rates throughout containment.

1.3 All engineered safeguards electrically operated valves must be cycled electrically after manual operation.

2. Initial Conditions

_____ 2.1 VE System is in operation maintaining Annulus pressure between -1.2 and -4.2 inches of water.

_____ 2.2 Containment H_2 concentration is greater than 3.5 percent and Technical Support Center has recommended placing H_2 Purge System in operation.

3. Procedure

CAUTION: **IF** symptoms of degraded core cooling have been observed, operating H2 Purge System may result in exceeding offsite release limits.

3.1 Startup

3.1.1 Open the following:

- _____ 1VE-5A (Cont H_2 Purge to Annulus Isol)
- _____ 1VE-6B (Cont H_2 Purge to Annulus Isol)
- _____ 1VE-8A (Cont H_2 Purge Blower Suction)
- _____ 1VE-10A (Cont H_2 Purge Blower Disch)

_____ 3.1.2 Start "Cont H_2 Purge Blwr".

_____ 3.1.3 Slowly open 1VE-9 (Cont H_2 Purge to Annulus) ensuring Annulus pressure stays in normal range.

3.2 Shutdown

_____ 3.2.1 Close 1VE-9 (Cont H_2 Purge to Annulus).

_____ 3.2.2 Stop "Cont H_2 Purge Blwr".

3.3 **WHEN** H_2 Blower will no longer be used for H_2 Concentration Control, close the following:

_____ • 1VE-5A (Cont H_2 Purge to Annulus Isol)
_____ • 1VE-6B (Cont H_2 Purge to Annulus Isol)
_____ • 1VE-8A (Cont H_2 Purge Blower Suction)
_____ • 1VE-10A (Cont H_2 Purge Blower Disch)

End of Enclosure

CLASSROOM TIME (Hours)

NLO	NLOR	LPRO	LPSO	LOR
1.0	1.0	2.0	2.0	1.0

OBJECTIVES

	OBJECTIVE	NLO	NLOR	LPRO	LPSO	LOR
1	State the purpose of the Annulus Ventilation System.	X	X	X	X	
2	State the purpose of the Hydrogen Purge System.	X	X	X	X	
3	Describe the basic flow path of the Annulus Ventilation System.	X	X	X	X	
4	Describe the basic flow path of the Hydrogen Purge System.	X	X	X	X	
5	Describe the Control Room controls and indications associated with the VE System.			X	X	X
6	State the signals necessary to automatically start the Annulus Ventilation Fans.	X	X	X	X	X
7	Explain the protection provided against excessive negative pressure in the annulus.	X	X	X	X	X
8	Evaluate plant parameters to determine any abnormal system conditions that may exist.			X	X	X
9	State the purpose of the following VE filter train components: • Moisture eliminator • Pre-filter • HEPA filter • Charcoal filter	X	X	X	X	

Examination Outline Cross-reference:	Level	RO	SRO
	Tier #	2	
	Group #	2	
	K/A #	029 A4.04	
	Importance Rating	3.5	

(Ability to manually operate and/or monitor in the control room: Containment Evacuation Signal)

Proposed Question: Common 33

Unit 1 is in Mode 6 conducting Refueling Operations.

Communications has been established between the Refueling SRO and the OATC in the Control Room.

Which ONE (1) of the following, assuming its automatic action has failed, would require the manual actuation of the Containment Evacuation Alarm?

A. Trip 2 on 1EMF-38 (Containment Particulate Monitor).

B. Trip 2 on 1EMF-16 (Containment Refueling Bridge).

C. Gammametrics Shutdown Monitor A HI CPS Alarm.

D. Containment Fire Zone alarms on EDA Computer.

Proposed Answer: **B**

Explanation (Optional):

A. Incorrect. OP-MC-WE-EMF p25, rev 28 identifies that 1EMF-39 (Gaseous Monitor), not 1EMF-38 (Particulate Monitor) automatically sounds the CEA.

B. Correct. OP-MC-WE-EMF p43, Rev 28 identifies that 1EMF-16 sounds the CEA when at Trip 2.

C. Incorrect. OP-MC-IC-ENB p41/43 Rev 26 states that the Source Range Monitors sound the CEA (Unless the Hi CPS Trips are Blocked), however the SDM do NOT.

D. Incorrect. The Zone Detectors do not automatically actuate the CEA. OP/0/A/6400/002C states that if the EDA Alarms are in the Containment then the CEA should be manually actuated.

Technical Reference(s)	OP-MC-IC-ENB p43-45 Rev 26	(Attach if not previously provided)
	OP-MC-WE-EMF p25, 43 Rev 28	(Including version or revision #)
	OP/0/A/6400/002C, Rev 42	

Proposed references to be provided to applicants during examination: None

Learning Objective: IC-ENB #16, SS-EFA #4, WE-EMF #3 (As available)

Question Source:	Bank #		
	Modified Bank #		(Note changes or attach parent)
	New	X	

Question History: Last NRC Exam NA

Question Cognitive Level:	Memory or Fundamental Knowledge	X
	Comprehension or Analysis	

10 CFR Part 55 Content:	55.41	4, 11
	55.43	

Comments:
KA is matched because conditions requiring actuation of the containment evacuation signal are being tested

The three sample points are monitored by a single Particulate-Iodine-Gas detector assembly. Selection of the point to be sampled is made using the toggle switches on the sample flow select module on the control cabinet (refer to Drawing 7.1). To prevent damage to the sample pump, at least one flow path must be opened. The sample air is returned to the containment.

According to the basis of T.S. 3.4.15 (RCS Leakage Detection Instrumentation), a sample from the lower containment region is required for NC leakage detection. The reason is that the NC system is physically located within the lower containment region. The incore area and lower containment samples are both obtained from the lower containment region. Applicable RP and Operations procedures reflect this requirement. For example, the Semi-Daily PT has a note to alert the operators that EMF-38 is inoperable if the sample pump is selected to Upper Containment only for greater than 15 minutes.

Objective # 3

A Trip 2 high radiation alarm on EMF-38(L), EMF-40(L), or EMF-39(L) channels will stop the CFAES pumps and the Incore Sump pump. Also, trip 2 will initiate a containment ventilation isolation signal through the Solid State Protection System. This SH signal will:

- **Secure VQ**
- **Secure VP**
- **Shut off containment sump pumps 1A1, 1A2, 1B1, 1B2, and incore sump pump.**

A high alarm on the EMF-39(L) (gaseous) channel will also sound the Containment Evacuation Alarm unless both source range high flux trips are blocked.

The purpose of the auto actions are to:

- **terminate a release originating in containment which is discharging to the Unit Vent if the release limits are exceeded.**
- **Stop the containment sump pumps to prevent pumping potentially highly contaminated water into the Aux. Building (i.e., FDT or WEFT).**
- **Sound the containment evacuation alarm to inform personnel to leave the containment due to the potential for high airborne concentration existing in containment.**

The Gas channel has a high and low range. The low range uses a plastic Scint detector while the high range uses a GM detector. The iodine portion uses a NaI Scint.

2.2 Area Monitors Functional Description

2.2.1 Area Radiation Monitors - Low Range

Objective #2

Detectors are situated to monitor the following areas for radiation hazards to personnel.

- **Auxiliary Building Corridors: 1EMF 1, 2, 3, 4, 6, 7, 8, 10, 23; 2EMF 9**
- **Sample Rooms: 1EMF 5; 2EMF 1**
- **Control Room: 1EMF 12**
- **Hot Machine Shop: 1EMF 15**
- **Laboratory (RP Shift Office) 1EMF 13**
- **Waste Drumming and Shipping Area: 1EMF 11 & 14**
- **Rx Bldg and SFP Refueling Bridge: 1EMF 16 and 17; 2EMF 3 and 4**
- **Incore Instrumentation Rooms: 1EMF 9; 2EMF 2**
- **New Fuel Buildings: 1EMF 20 & 21; 2EMF 7 & 8**
- **Diesel Generator Rooms: 1EMF 28; 2EMF 14**
- **Technical Support Center: EMF 22**
- **QA Radiographic Shooting Vault: EMF 29**

Objective #3

No control actions are performed by these channels with the exception of 1EMF-16 and 2EMF-3 (Containment Refueling Bridge). **On a Trip 2 High Radiation Alarm, the respective EMF (1EMF-16 and 2EMF-3) will actuate the Containment Evacuation alarm. This alarm is blocked when both Source Range high flux trips are blocked.**

These channels use a Geiger-Mueller detector. The instrument range is 0.1 to 10^4 mr/hr.

2.2.2 Reactor Coolant Filter Area Monitor

Objective #2

The following EMFs are used to monitor the activity level of the reactor coolant filters:

- **1 EMF 18 Reactor Coolant Filter 1A**
- **1 EMF 19 Reactor Coolant Filter 1B**
- **2 EMF 5 Reactor Coolant Filter 2A**
- **2 EMF 6 Reactor Coolant Filter 2B**

Two position selector switches are also installed to enable the Reactor Operator to bypass the alarm signal from the Shutdown Monitor to the Source Range High Flux at Shutdown annunciator panel.

Objective # 16

The Shutdown Monitors continuously display source range countrate and the high flux alarm setpoint, and will supplement the Source Range Instrumentation during shutdown, refueling, and startup operations. Tech Spec bases provide for the use of the Gamma-Metrics monitors in addition to one of the existing Source Range Nuclear Instruments to meet the requirements of Tech Spec 3.9.3, Nuclear Instrumentation.

The Shutdown Monitors function to provide Control Room indication of core reactivity. The Shutdown Monitors serve as a supplemental indication for the Source Range Nuclear Instrumentation during reactor conditions that fall within the monitors measurement range (10^{-1} to 10^{4} cps).

The Shutdown Monitors receive qualified neutron signals from neutron flux detectors via a signal processor. The Signal Processors are located in the ETA and ETB switchgear rooms. The Shutdown Monitors indicating range is slightly narrower than the Source Range Nuclear Instrumentation indication range.

A visual indication of alarm (Hi Flux at Shutdown) is provided on the Shutdown Monitor (0.5 decades above background). The Shutdown Monitors will provide a signal to annunciators 1AD2/D3 (Unit 1) & 2AD2/D3 (Unit 2) - S/R Hi Flux at Shutdown. **The Control Room Operator is able to bypass this alarm signal via two selector switches on MC1 located between the shutdown monitors. When the switch is in the bypass position, the shutdown monitor is inoperable per Tech. Spec. 3.9.3. The cause of inoperability, in this case, is the monitor will not drive the annunciators (PIP M-7-02486)**

Unlike the Excore Source Range Instruments, the Shutdown Monitors DO NOT activate the containment evacuation alarm.

2.6.2 Shutdown Monitor Panel

LED readouts for A and B Train are in the Control Room between the DRPI Panel and Chart Recorder NR-45 (10^{-1} - 10^{4} cps). The Hi flux at Shutdown alarm comes in at 0.5 decades above background. This alarm is bypassed by operators on startup using selector switches adjacent to the display panels .

<u>Countrate Display</u>: Local, continuous display of the average rate of the last 600 or more counts. Utilizes 20 registers to obtain average. Each register contains the calculated countrate over the last one second OR 30 counts, whichever is longer.

- Example 1: For a countrate of <30 cps, next register will not update until 30 counts are received. At that time, the register will contain the countrate over the last 30 counts and the Countrate Display will update to the new average of all 20 registers. For a continued countrate of <30 cps, the Countrate Display will not update until every 30 counts are detected. For a continuous countrate of 10 cps, the Countrate Display will update every 3 seconds.

- Example 2: For a countrate of >30 cps, next register will update after 1 second. At that time, the register will contain the current countrate and the Countrate Display will update to the new average of the last 20 registers. For a continued countrate of >30 cps, the Countrate Display will update every second, regardless of actual countrate.

1/N: - Local pushbutton which results in display of the inverse of the average countrate. Useful as an alternative method for monitoring rate of change of countrate.

Alarm Setpoint: - Local, continuous display of the alarm setpoint calculated as the lowest value yet of the product of the alarm ratio and the average rate of the last 1200 or more counts. Utilizes 40 registers each containing the countrate calculated from 30 counts of 1 second, whichever is longer. The alarm setpoint is approximately .5 decades above the average countrate contained in the 40 registers.

The Alarm Setpoint (and display) updates automatically on continuously decreasing countrate. The setpoint will update when the next register fills with a still lower countrate. The registers fill upon receiving 30 counts or after 1 second, whichever is longer.

For continuously increasing countrate, the alarm setpoint DOES NOT automatically update but must be manually reset using the ALARM SETPOINT RESET local pushbutton. Note that the countrate will not update until the next register is filled as described above.

Alarm Setpoint Reset: - Local pushbutton which will reset the alarm setpoint (and display) upon receiving the next countrate (i.e. at next register fill). This pushbutton must be depressed to update/increase setpoint on increasing setpoints. Note that to prevent nuisance alarms, countrate and setpoint displays should be monitored during startup and refueling and alarm setpoint reset when counts are approaching setpoint.

Alarm Light: - Local LED which illuminates when Countrate equals Alarm Setpoint. Note that annunciator is also received.

Alarm Reset: - Local pushbutton which resets the alarm condition if the countrate is less than the setpoint.

Test: - Local pushbutton which initiates a self-test feature to ensure instrument operation. Displays will return to normal if no error conditions and will display an error code otherwise. IAE should be contacted if error code is displayed. Test pushbutton should only be used as described in Recommended Operating Instructions.

Annunciator AD2.D-3, S/R Hi Flux at Shutdown: - Annunciator which illuminates upon receipt of High Flux at Shutdown condition (i.e. displayed countrate exceeds the alarm setpoint). This is the same annunciator actuated by the NIS High Flux at Shutdown but DOES NOT initiate the Containment Evacuation Alarm.

Annunciator Blocks: - Switches located on Main Control Board which block the alarm output of the Shutdown Monitors to the High Flux at Shutdown Annunciator. The switches have no effect on the local Shutdown Monitor alarm indication. Should only be placed in BLOCK condition as described in the Recommended Operating Instructions.

1. Limits and Precautions

None

2. Initial Conditions

None

3. Procedure

☐ 3.1 **IF** EFA computer out of service **AND CANNOT** be immediately restarted, perform the following within 1 hour (SLC).

NOTE:	Steps 3.1.1 - 3.1.7 may be performed concurrently. (E-fil references provide more detail)

3.1.1 Initiate a continuous Fire Watch on the following:

- ☐ Zone 41 (Switchgear Room 1ETA and Switchgear AHU 1A & 1B Room (Room 803A)) (E-fil M-0303)
- ☐ Zone 43 (Switchgear Room 2ETA and Switchgear AHU 2A & 2B Room (Room 805A)) (E-fil M-0303)
- ☐ Any breached fire barriers

☐ 3.1.2 Initiate an hourly fire watch for zones in Table 4.1-2 (DGP 45 Sub-zones) Local Monitoring Requirements, except as noted in Table. (E-fil M-0305)

3.1.3 Check the following once per hour:

- ☐ Unit 1 Annulus Detection Panel
- ☐ Unit 2 Annulus Detection Panel
- ☐ DGPs listed in Table 4.1-1 (Local Monitoring Requirements) (E-fil M-304)

☐ 3.1.4 **IF** any fire zone found in alarm, check affected zone locally.

NOTE:	Surveillance requirements for containment SLC fire zones are satisfied by monitoring containment temperatures as described below.

☐ 3.1.5 Monitor Upper Containment average temperature hourly for Unit 1 and 2. (E-fil M-0306)

☐ 3.1.6 Monitor Lower Containment weighted average temperature hourly for Unit 1 and 2. (E-fil M-0306)

☐ 3.1.7 **IF** fire verified in containment, manually actuate Containment Evacuation alarm.

12	List the Protection and Control Interlocks (Ps and Cs) associated with the Nuclear Instrumentation System. (Include setpoints and logic)		X	X	X	X
13	State the purpose of the Wide Range Neutron Detection System.		X	X	X	
14	Concerning the Wide Range Neutron Detection System:					
	• Describe the operation.		X	X	X	
	• Describe the indications and controls.		X	X	X	X
15	State the purpose of the Gamma-Metrics Shutdown Monitor System.		X	X	X	
16	Concerning the Gamma-Metrics Shutdown Monitor System:					
	• Describe the operation.		X	X	X	
	• Describe the alarms, indications and controls.		X	X	X	X
17	Determine the validity of indicated reactor power using alternate indications of power level.		X	X	X	X
18	Describe the Source Range instrumentation response for voiding in the core and downcomer region.		X	X	X	X
19	Concerning the Technical Specifications related to the Nuclear Instrumentation System;					
	• Given the LCO title, state the LCO (including any COLR values) and applicability.			X	X	X
	• For any LCO's that have action required within one hour, state the action.			X	X	X
	• Given a set of parameter values or system conditions, determine if any Tech Spec LCO's is(are) not met and any action(s) required within one hour.			X	X	X
	• Given a set of plant parameters or system conditions and the appropriate Tech Specs, determine required action(s).			X	X	X
	• Discuss the basis for a given Tech Spec LCO or Safety Limit.				X	*
	* SRO Only					

CLASSROOM TIME (Hours)

NLO	NLOR	LPRO	LPSO	LOR
3	3	3	3	2

OBJECTIVES

SEQ	OBJECTIVE	NLO	NLOR	LPRO	LPSO	LOR
1	State the purpose of the Process and Area Radiation Monitoring System. WEEMF001	X	X	X	X	
2	List the process monitored by each EMF and why it is monitored. WEEMF002	X	X	X	X	X
3	Describe the automatic actions that occur as a result of a Trip alarm for each of the following EMFs • 1(2) EMF 31 Unit 1(2) Conv. Waste Treatment System • 1(2) EMF 34(L) Unit 1(2) Steam Generator Sample • 1(2) EMF 35(L) Unit 1(2) Unit Vent Part. (low range) • 1(2) EMF 36(L) Unit 1(2) Unit Vent Gas (low range) • 1(2) EMF 37 Unit 1(2) Unit Vent Iodine Monitor • 1(2) EMF 38(L) Unit 1(2) Cont. Part. (low range) • 1(2) EMF 39(L) Unit 1(2) Cont. Gas (low range) • 1(2) EMF 40 Unit 1(2) Cont. Iodine • 0EMF 41 Aux. Bldg Vent. • 1(2) EMF 42 Unit 1(2) Spent Fuel Bldg. Vent. • 1(2) EMF 44(L) Unit 1(2) Cont. Vent. Drain Tank • 1(2) EMF 46A/B Unit 1(2) Component Cooling • 0EMF 47 Boron Recycle Evap. Distillate (cont.)	X	X	X	X	X

{SEQ is the order in which the objective is first covered in the lesson plan)

SEQ	OBJECTIVE	NLO	NLOR	LPRO	LPSO	LOR
	• 0EMF 49(L) Liquid Waste Discharge • 0EMF 50(L) Waste Gas Discharge • 0EMF 52 Interim Radwaste Facility Vent. • 0EMF 53 Contaminated Mat'ls Warehouse Vent. • 0EMF 54A/B TSC Vent. • 2EMF 59 Equipment Staging Building Vent. • 1(2) EMF 36(HH) Unit 1(2) Unit Vent Activity Monitor • 2EMF 3 Unit #2 containment Refueling Bridge • 1EMF 16 Unit #1 containment Refueling Bridge WEEMF003					
4	Describe the sampling capabilities of EMF-38, 39, 40. WEEMF004	X	X	X	X	X
5	Describe the sampling process of 0EMF-41. WEEMF005	X	X	X	X	X
6	Describe the type of detector used in each EMF. WEEMF006	X	X	X	X	
7	Describe the basic flowpath and operation of a Particulate, Iodine, and Gas Detector Assembly. WEEMF007	X	X	X	X	
8	Describe the operation of the Fixed Filter Assemblies for Unit Vent and Containment Atmosphere EMF's. WEEMF008	X	X	X	X	X
9	Describe the indications and controls on the following readout modules • RP-2A • RP-2C • RP-86A WEEMF009			X	X	X

CLASSROOM TIME (Hours)

NLO	NLOR	LPRO	LPSO	LOR
1	1	1	1	1

OBJECTIVES

	OBJECTIVE	NLO	NLOR	LPRO	LPSO	LOR
1	State the purpose of the Fire Detection System.	X	X	X	X	
2	Describe layout and basic operation of the Fire Detection System to include: • Detector types and operation of each • Data Gathering Panels (DGPs) • Fire Detection Processing Control Center (EFAPCC). • Determination of which zone is in alarm.	X	X	X	X	
3	Describe the type of information contained in the following enclosures of the Fire Detection Procedure (OP/0/A/6400/002 C). • Fire Zone Data • Control Code Listings	X	X	X	X	
4	Discuss the following ALARM/STATUS indications (including Annunciator Response Procedures) associated with the Fire Detection System: • Fire Detection System Alert • Fire Detection System CPU Power Failure • 1AD-13 Reset Pushbutton.	X	X	X	X	X

Examination Outline Cross-reference:	Level	RO	SRO
	Tier #	2	
	Group #	2	
	K/A #	033 K3.01	
	Importance Rating	2.6	

(Knowledge of the effect that a loss or malfunction of the Spent Fuel Pool Cooling System will have on the following: Area ventilation systems)

Proposed Question: Common 34

Unit 1 is in Mode 5 with the following conditions:

- Spent Fuel Pool fuel handling operations secured 4 hours ago.
- 1ETB and related equipment has been just removed from service.
- VF System operating normally in accordance with OP/1/A/6450/004, "Fuel Pool Ventilation System."
- The 1A KF Pump trips.
- "SPENT FUEL POOL TEMP HI" OAC alarm occurs.
- EMF-42, Fuel Building Ventilation Radiation Monitor in Trip 2.

Which ONE (1) of the following describes an automatic response by the Fuel Handling Building Ventilation System (VF)?

A. The Outside Air Damper (D-1) will close.

B. The Exhaust Filter Bypass Damper (D-5) will close.

C. The Filter Isolation Dampers (D-3 & D-4) will close.

D. The Supply fan will stop.

Proposed Answer: **B**

Explanation (Optional):

OP-MC-FH-KF (p23) states that each Spent Fuel Pool Cooling Pump receives power from its respective Essential Bus, 1(2)ETA (4160V) or 1(2)ETB (4160V) (the same buses that can be powered by the Emergency Diesel Generators). This means that all KF has been lost and AP/1/A/5500/41, Case I, entry conditions are met.

OP-MC-FH-VF (p19) states that "Normal system operation will bypass the Filter Train Unit and direct exhaust flow, via both Fuel Pool Exhaust Fans, to the Unit

Vent."

A. Incorrect. OP-MC-FH-VF (p19, Rev 18) states that the Damper will operate automatically with Supply Fan status. When the fan is running the Damper opens and when it stops the Damper will close.

B. Correct. OP-MC-FH-VF (p17) states that a Trip 2 condition on EMF-42, Fuel Building Ventilation Radiation Monitor, will result in automatic termination of BYPASS MODE operation and automatic alignment to the FILTRATION MODE of operation." In this condition the Filter Train Bypass Damper (D-5) will close, the Filter Train Inlet Damper (D-3) and the Filter Train Outlet Damper (D-4) will open.

C. Incorrect. OP-MC-FH-VF (p17) states that a Trip 2 condition on EMF-42, Fuel Building Ventilation Radiation Monitor, will result in automatic termination of BYPASS MODE operation and automatic alignment to the FILTRATION MODE of operation." In this condition the Filter Train Bypass Damper (D-5) will close, the Filter Train Inlet Damper (D-3) and the Filter Train Outlet Damper (D-4) will open.

D. Incorrect. The Supply Fan has automatic trips associated with system temperature which will not be affected by these events. Additionally, the Supply fan will automatically operate with the Exhaust Fan. The stated conditions will not affect Exhaust fan operation and therefore the status of the Supply Fan will NOT change. OP-MC-FH-VF (p13)

Technical Reference(s)	AP/1/A/5500/41, Rev 6	(Attach if not previously provided)
	OP-MC-FH-KF p22, Rev 29	(Including version or revision #)
	OP-MC-FH-VF p17, 19, 23 Rev 18	

Proposed references to be provided to applicants during examination: None

Learning Objective: FH-KF #6, FH-VF #8/9 (As available)

Question Source:	Bank #		
	Modified Bank #		(Note changes or attach parent)
	New	X	

Question History: Last NRC Exam

Question Cognitive Level: Memory or Fundamental Knowledge X

Comprehension or Analysis _____

10 CFR Part 55 Content: 55.41 7, 10 _____

55.43 _____

Comments:
KA is matched because pump failure and resulting high radiation level will eventually result in effect on system as described.

The following is a listing of these Annunciator Alarms and Status Lights:

VF Filter RF Trouble *(OAD-12 E1* and *Status Light)*

Indicates an open or shorted sensor circuit associated with the Fire Protection System. Immediately, dispatch an NLO (Non-Licensed Operator) to the Filter Train Unit to determine which sensor *(inlet or outlet)* is malfunctioning.

VF Filter High Temperature *(OAD-12 E2* and *Status Light)*

Indicates a high temperature condition (220°F) **or a temperature sensor instrument failure, within the Charcoal (Adsorber) Filter**. Immediately, dispatch an NLO (Non-Licensed Operator) to the Filter Train Unit to determine the cause of the alarm.

VF Filter Fire *(OAD-12 E3* and *Status Light)*

Indicates a fire condition (325°F) within the Charcoal (Adsorber) Filter. Immediately, inform the OSM (Operations Shift Manager) and MANUALLY activate the FIRE PROTECTION SYSTEM by performing the following:

- OPEN RY-113 (Aux. Bldg. West Fire Protection Deluge Valve)
- OPEN RY-114 (Aux. Bldg. East Fire Protection Deluge Valve)
- CLOSE RF-1065 (Fuel Pool Filter Low Point Drain Valve)

- UNLOCK and OPEN RF-480 (Fuel Pool Area Filter Isolation Valve)
- UNLOCK and OPEN RF-1118 (Fuel Pool Filter Isolation Valve)

2.3 Fuel Pool Exhaust Fans

The Fuel Pool Exhaust Fans are driven by 50 HP, 575 VAC, 3∅ motor (Unit 1 / 1A Exhaust Fan 1MXJ and 1B Exhaust Fan 1MXK **and** Unit 2 / 2A Exhaust Fan 2MXJ and 2B Exhaust Fan 2MXK).

Objective # 5

A two-position (OFF / FANS A & B) selector switch, located in the Control Room on the HVAC Panel, will start both Exhaust Fans simultaneously when placed into the FANS A & B position. Operation of the Fuel Pool Exhaust Fans will activate their respective discharge pressure switch (VFPS9140 and VFPS9150) **and :**

- **Initiate a "start" signal to the Supply Unit Fan #**
- **Provide a "permissive" signal** for Filter Train **BYPASS MODE** operation.

Objective # 4

This interlock **requires <u>only one of the two</u> Fuel Pool Exhaust Fans to be operating to automatically "start" the Supply Unit Supply Fan.** However, **both fans are always started simultaneously due to selector switch design. A *loss of flow condition*, as sensed by <u>both</u> Fuel Pool Exhaust Fans, would be required to "trip" the Supply Unit Supply Fan.**

Objective # 10

Normal system operation will bypass the Filter Train Unit and direct exhaust flow, via both Fuel Pool Exhaust Fans, to the Unit Vent. System flow is adjusted to

Borated water, from the Refueling Water Storage Tank (FWST), should be used for makeup if the ***last SFP boron sample indicated < 2775 ppm or boration is desired.***

Objective # 4 & 5

Non-borated lake water *(Assured Makeup)*, from the Nuclear Service Water System (RN), can be used for makeup. The *Assured Makeup* **should only be used if borated and demineralized water are not available for makeup** *and* **the Spent Fuel Pool Level is low enough to cause a** *radiation hazard to employees or the public.*

Electrical Power Supply

Objective # 6

Each Spent Fuel Pool Cooling Pump receives power from its respective *Essential Bus, 1(2)ETA* **(4160V)** *or 1(2)ETB* **(4160V)** *(the same buses that can be powered by the Emergency Diesel Generators).*

Each KF AHU receives power from its respective *Essential Motor Control Center, 1(2) EMXA* **(600V)** *or 1(2) EMXB* **(600V).**

The Fuel Pool Skimmer Pump receives power from one of the normal station buses *1(2) MXK* **(600V)** and can be operated anytime the bus is energized. However, this pump is not required during emergency operations.

Motor-operated valve 1(2)KF-12, Purification Loop Isolation Valve, is also powered from a normal station bus *1(2) MXJ* **(600V)** and can be operated remotely anytime the bus is energized. *Manual operation of this valve can be performed if power is unavailable.*

Spent Fuel Pool Chemistry

One spent fuel pool water volume is circulated, through the *purification loop,* every 24 hours. This allows proper maintenance of Spent Fuel Pool chemistry as specified and required by the Chemistry Department.

achieve an exhaust flowrate greater than supply flowrate, by at least 8000 cfm; maintaining a slight negative pressure, within the Fuel Handling Building, and minimizing any out-leakage. Operating indication, for the Exhaust Fans and associated back-draft dampers, is provided at the HVAC and Auxiliary Building Panels:

Objective # 5

HVAC Panel Indication

- **"A" Exhaust Fan ON / OFF** (red / green) **status lights**.
- **"B" Exhaust Fan ON / OFF** (red / green) **status lights**.
- **Exhaust Damper** D-1 **OPEN / CLOSED** (red / green) **status lights**.
- **Exhaust Damper** D-2 **OPEN / CLOSED** (red / green) **status lights**.

Objective # 3

Auxiliary Building Panel (AB-ECP-2A) Indication

- **"A" Exhaust Fan ON / OFF** (red / green) **status lights**.

In addition, the OFF (green) status light will "flash" to indicate when the Exhaust Fan has tripped on an *overload*.

- **"B" Exhaust Fan ON / OFF** (red / green) **status lights**.

In addition, the OFF (green) status light will "flash" to indicate when the Exhaust Fan has tripped on an *overload*.

- **Exhaust Damper** D-1 **OPEN / CLOSED** (red / green) **status lights**.
- **Exhaust Damper** D-2 **OPEN / CLOSED** (red / green) **status lights**.

In addition, Exhaust Fan operating status is provided on the OAC (Operator Aid Computer) and the Exhaust Fans will TRIP on a Filter Train FIRE (VF Filter Fire "white" status light at the HVAC Panel).

2.4 Fuel Handling Building Ventilation Pneumatic Dampers

Objective # 3

Supply Unit Inlet Damper (D-1)

The **Supply Unit Inlet Damper** (FPS-D-1) **opens automatically when the Supply Unit Fan starts. Operating status** is provided **indirectly through FLOW / NO FLOW** (red / green) **status light indication on Auxiliary Building Panel** AB-ECP-2A.

Objective # 5

Filter Train Unit Pneumatic Dampers (D-3, D-4, and D-5)

The **Filter Train Unit Dampers** (FPX-D-3, FPX-D-4, and FPX-D-5) **are operated by a two-position (OPEN / CLOSED) selector switch on the HVAC Panel**. This selector switch is **labeled as VF EXH BYP DMPR CNTRL**.

Placing this switch to the **OPEN** position will align the Filter Train Unit for **BYPASS MODE** of operation (normal system operation with the following damper alignments:

- **Filter Train Bypass Damper** (D-5) * **OPEN**
- **Filter Train Inlet Damper** (D-3) **CLOSED**
- **Filter Train Outlet Damper** (D-4) **CLOSED**

***Operation of the Exhaust Filter Train Bypass Damper is verified at the HVAC Panel (OPEN / CLOSED status lights).**

2.2 Filter Train Unit

The Filter Train Unit consists of an Absolute (HEPA) Filter with a Charcoal (Adsorber) Filter. The Absolute Filter is capable of removing 99.9% of particles >.30 microns at a flow rate of 35,000 cfm ± 10% to prevent decreasing the efficiency of the Charcoal (Adsorber) Filter to remove iodine from the air being discharged to the Unit Vent.

Objective # 8

Both Fuel Pool Exhaust Fans operating will provide a "permissive" signal for BYPASS MODE operation (normal system operation). However, a Trip 2 condition on EMF-42, Fuel Building Ventilation Radiation Monitor, will result in automatic termination of BYPASS MODE operation and automatic alignment to the FILTRATION MODE of operation:

- **Filter Train Bypass Damper** (D-5) **CLOSED**
- **Filter Train Inlet Damper** (D-3) **OPEN**
- **Filter Train Outlet Damper** (D-4) **OPEN**

Objective # 5
Objective # 9

Filter Train alignment is controlled from the HVAC Panel within the Control Room. A two-position (OPEN / CLOSED) selector switch is provided. This switch, VF EXH BYP DMPR CNTRL, is used to align the Filter Train Unit for BYPASS MODE or FILTRATION MODE of operation.

Placing this switch to the OPEN position will align the Filter Train Unit for BYPASS MODE operation (normal system operation). BYPASS MODE of operation damper alignment:

- **Filter Train Bypass Damper** (D-5) * **OPEN**
- **Filter Train Inlet Damper** (D-3) **CLOSED**
- **Filter Train Outlet Damper** (D-4) **CLOSED**

  ***Operation of the Exhaust Filter Train Bypass Damper is verified at the HVAC Panel (OPEN / CLOSED status lights).**

Placing this switch to the **CLOSED** position **will align the Filter Train Unit for FILTRATION MODE operation (fuel handling system operation). FILTRATION MODE of operation damper alignment:**

- **Filter Train Bypass Damper** (D-5) * **CLOSED**
- **Filter Train Inlet Damper** (D-3) **OPEN**
- **Filter Train Outlet Damper** (D-4) **OPEN**

  ***Operation of the Exhaust Filter Train Bypass Damper is verified at the HVAC Panel (OPEN / CLOSED status lights).**

When in the FILTRATION MODE, flow through the charcoal filter must be locally verified by use of the ΔP gage at the filter unit (1MVFPG9180).

A *manually activated* FIRE PROTECTION System, associated with the Filter Train Unit, is provided with *alarms* and *status lights* at the HVAC Panel within the Control Room. Heat generated by the decay of radioactive iodine, trapped within the charcoal beads, would be the most probable cause of such a fire.

2.0 COMPONENT DESCRIPTION

2.1 Fuel Handling Building Ventilation Supply Unit

The Fuel Handling Building Ventilation Supply Unit is an Air Handling Unit comprised of a Supply Fan (FPSU-1), Cooling Coils, Hot Water Heating Coils, and Pre-filter. The VF Supply Unit provides sufficient air flow for the Fuel Pool Exhaust Fans to discharge 35,000 cfm ± 10% *(required flowrate whenever irradiated fuel is being moved within the Spent Fuel Pool and/or crane operation with a load over the Spent Fuel Pool).*

Objective # 3

The Supply Fan, powered by a 30 HP, 575 VAC, 3∅ motor *(Unit 1 / 1MXK and Unit 2 / 2MXK)*, **is controlled by a two-position selector switch (AUTO / OFF) located on Auxiliary Building Panel** AB-ECP-2A. **This switch will initiate the following actions when placed in the AUTO position:**

- **Supply Fan will automatically "start" when both Exhaust Fans are running. #**
- **The Supply Fan "start" will activate Fuel Handling Area Temperature Control** (Minor Modification 7804) and **OPEN the Supply Unit Inlet Damper (D-1).**
- **Supply Fan will automatically "trip" on Inlet Air Temperature <35°F or Filter Train Inlet Air Temperature >160°F** *(Refer to Training Drawing 7.2, Fuel Handling Building Ventilation System - Composite).*

Objective # 4

 # This interlock requires only one of the two Fuel Pool Exhaust Fans to be operating to automatically "start" the Supply Unit Supply Fan. However, both fans are always started simultaneously due to selector switch design. A *loss of flow condition*, as sensed by both Fuel Pool Exhaust Fans, would be required to "trip" the Supply Unit Supply Fan.

Operation of the Supply Fan activates a pressure switch (VFPS9050) **to provide:**

- **A "permissive" signal for operation of the YH Secondary Water Pumps** (YH).
- **Confirmation of operation with indication provided at the HVAC and Auxiliary Building Panels.**

Objective # 5

HVAC Panel Indication

The Supply Fan has a NORMAL / OFF (red / green) indication, for VF SUPPLY AIR FLOW, on the HVAC Panel. The NORMAL flow indication light will only illuminate after the Supply Fan is started and operation has been confirmed by "pressure switch" (VFPS9050) **activation.** *(Refer to Training Drawing 7.3, Fuel Handling Building Ventilation System - Unit 1 HVAC Controls).*

CLASSROOM TIME (Hours)

NLO	NLOR	LPRO	LPSO	LOR
2	2	2	2	2

OBJECTIVES

	OBJECTIVE	NLO	NLOR	LPRO	LPSO	LOR
1	State the purpose of the Fuel Handling Building Ventilation System.	X	X	X	X	
2	Draw the Fuel Handling Building Ventilation System (including all major components) per Training Drawing 7.1, Fuel Handling Building Ventilation System - Simplified.	X	X	X	X	
3	Describe the Auxiliary Building Panel controls / indications associated with operation of the Fuel Handling Building Ventilation System.	X	X	X	X	X
4	Explain the INTERLOCK(s) associated with operation of the Fuel Handling Building Ventilation System "supply" and "exhaust" fans.	X	X	X	X	X
5	Describe the HVAC Panel controls / indications associated with operation of the Fuel Handling Building Ventilation System.			X	X	X
6	State the cooling medium utilized for the Fuel Handling Building Ventilation System.	X	X	X	X	
7	State the heating medium utilized for the Fuel Handling Building Ventilation System.	X	X	X	X	
8	Explain the INTERLOCK associated with EMF-42 and the Fuel Handling Building Ventilation System.	X	X	X	X	X
9	Describe the major difference(s) between "normal system operation" and "fuel handling system operation" of the Fuel Handling Building Ventilation System.	X	X	X	X	X
10	Explain operation of the Fuel Handling Building Ventilation System to maintain "negative pressure" within the Fuel Handling Building.	X	X	X	X	X
11	Given a Limit and/or Precaution, associated with operation of the Fuel Handling Building Ventilation System, discuss it's basis and applicability.	X	X	X	X	X

CLASSROOM TIME (Hours)

NLO	NLOR	LPRO	LPSO	LOR
2	2	2	2	2

OBJECTIVES

	OBJECTIVE	NLO	NLOR	LPRO	LPSO	LOR
1	State the purpose of the Spent Fuel Pool Cooling System.	X	X	X	X	
2	Draw a simplified diagram of the Spent Fuel Pool Cooling System (including all major components) per Training Drawing 7.1, Spent Fuel Pool Cooling System - Simplified.	X	X	X	X	
3	State the flowrates through each of the following flowpaths: • Spent Fuel Pool Cooling Loop • Spent Fuel Pool Purification Loop • Spent Fuel Pool Skimmer Loop	X	X	X	X	
4	List the sources of makeup to the Spent Fuel Pool Cooling System; including the source grade (i.e., borated, non-borated demineralized, and non-borated lake water).	X	X	X	X	
5	Explain the conditions which would require *"assured makeup"*, from the Nuclear Service Water System, to the Spent Fuel Pool Cooling System.	X	X	X	X	X
6	List the power supply for the following Spent Fuel Pool Cooling System Pumps (Unit 1 and Unit 2): • KF Pump(s) • KF Skimmer Pump(s)	X	X	X	X	
7	Describe the controls, indications, and/or alarms, associated with Spent Fuel Pool Cooling System operation, located <u>within</u> the <u>Control Room</u>.			X	X	X
8	Describe how the KF Pump motor(s) is cooled during system operation.	X	X	X	X	
9	State the cooling medium for the Spent Fuel Pool Cooling System Heat Exchanger(s).	X	X	X	X	
10	Describe the controls, indications, and/or alarms, associated with Spent Fuel Pool Cooling System operation, located <u>outside</u> the <u>Control Room</u>.	X	X	X	X	

ACTION/EXPECTED RESPONSE	RESPONSE NOT OBTAINED

B. Symptoms

- **"SPENT FUEL POOL TEMP HI" OAC alarm**
- **Both KF pumps off**

C. Operator Actions

__ 1. **Check Fuel movement - IN PROGRESS:**	**Perform the following:** a. **IF** any radioactive component is being handled in the Spent Fuel Pool, **THEN** perform the following: __ • Lower component to fully down OR __ • Reinstall component OR __ • Place component below top of fuel racks. __ b. **GO TO** Step 3.
2. **Notify fuel handling crew to perform the following:**	
__ a. Lower any fuel assembly in the spent fuel manipulator crane to fully down.	__ a. Release brake and hand crank hoist down.
__ b. Lower any fuel assembly in upender to fully down.	__ b. Release brake and hand crank upender down.
__ 3. **Check KC aligned to either ND Hx.**	__ **GO TO Step 5.**
__ 4. **Check all KC pumps - RUNNING.**	__ **Start all KC pumps PER OP/1/A/6400/005 (Component Cooling Water System), Enclosure 4.3 (KC Pump Operation).**

Examination Outline Cross-reference:	Level	RO	SRO
	Tier #	2	
	Group #	2	
	K/A #	035 A2.05	
	Importance Rating	3.2	

(Ability to (a) predict the impacts of the following mal-functions or operations on the GS; and (b) based on those predictions, use procedures to correct, control, or mitigate the consequences of those malfunctions or operations: Unbalanced flows to the S/Gs)

Proposed Question: Common 35

Unit 1 is operating at 100% power and aligned normally when the following event occurs:

- 1SMLP5080 (1A SG Steam Pressure Channel 1) fails high.

Which ONE (1) of the following describes the **actual** impact on the 1A Steam Generator and the procedure that would be used to respond to the event?

A. Steam flow increases, AP/1/A/5500/001 (Steam Leak)

B. Steam flow decreases, AP/1/A/5500/001 (Steam Leak)

C. Feed flow increases, AP/1/A/5500/006 (SG Feedwater Malfunction)

D. Feed flow decreases, AP/1/A/5500/006 (SG Feedwater Malfunction)

Proposed Answer: **C**

Explanation (Optional):
OP-MC-CF-IFE (p17) states that SG Steam flow is indicated on the control board for both channels of each steam generator, 1A(B,C,D) STEAM GENERATOR 'SM FLOW' for channels 1&2 with a range of 0-120%. The channel to be used for level control is selected using the switch '1A S/G STM FLOW SELECT', for example. (located on the main control board next to the feedwater control valve controllers). There is one switch per loop (S/G), with CH 1 & CH2 positions, and normally channel 1 is selected for control. Drawing 7.2 of OP-MC-CF-IFE shows that channel 1 Steam Pressure provides density compensation for Channel 1 Steam flow, and these channels are normally selected.

A. Incorrect. Channel 1 Steam Pressure does not input into the SG PORV control circuit. The PORV has its own pressure sensor (Shown on Drawing

7.1 of OP-MC-STM-SM). The PORV will not open. However, this is plausible in that if the Steam Pressure transmitter controlling the PORV did fail high, the PORV would open and increase Steam Flow. Additionally, if this occurred the Operator would mitigate the consequences by completing AP1 (Steam Leak).

B. Incorrect. The pressure channel failing high is failing in the wrong direction for Steam Line isolation which would, with other failures, actuate and result in Steam Flow decreasing.

C. Correct. According to OP-MC-CF-IFE (p17) the Steam Flow measurement in the Steam Generator Water Level Control System must be density compensated in order to adequately compare Steam and Feed flows for a given Steam Generator. Steam Pressure is directly proportional to Steam Flow. If Steam Pressure fails high, steam flow will also be high, although in error. OP-MC-CF-IFE (p33) describes the effect of a Steam Flow Transmitter Failure as follows: Steam Flow transmitter fails high : Due to SM flow indicating greater than CF flow, the Flow Error causes the CF Control Valves to open . S/G level will increase toward the (P14) setpoint where a Turbine/Reactor trip occurs. The same reference describes the failure of a Steam Pressure transmitter failure as follows: Steam Pressure transmitter fails high: the effect will be the same as a Steam Flow transmitter failing high. Steam Generator level going up or down in an uncontrolled manner is an identified symptom of AP6, "SG Feedwater Malfunction."

D. Incorrect. Correct procedure, however, Feed flow will NOT decrease. Feed flow would decrease if the Steam Pressure Channel failed low because the desity compensation would again be lost to the controlling Steam Flow channel. With density compensation lost, the Steam Flow transmitter would read correspondingly lower, and a flow error in which the CF Control Valve would tend to close decreasing flow.

Technical Reference(s)	OP-MC-CF-IFE (p17, 45,) Rev 21	(Attach if not previously provided)
	OP-MC-STM-SM (p69) Rev 25	(Including version or revision #)
	AP6 Symptoms	

Proposed references to be provided to applicants during examination: None

Learning Objective: STM-SM #9, CF-IFE #6, 10 and 11 (As available)

Question Source: Bank # _____

Modified Bank _____ (Note changes or attach

#	_____	parent)
New	X	

Question History: Last NRC Exam _____

Question Cognitive Level:

Memory or Fundamental Knowledge	_____
Comprehension or Analysis	X

10 CFR Part 55 Content:

55.41	7, 14
55.43	_____

Comments:

KA is matched because item evaluates a condition that will result in a change in flow to only 1 SG. Impact and procedure are required to answer this item

Objective #6 & #10

2.1.3. Steam Flow

There are two steam flow channels per steam generator. To measure steam flow, differential pressure is measured across the flow restrictor in the top of the steam generator. To compensate for density, the differential pressure is multiplied by the steam line pressure. If this compensation were not used, volume flow would be measured. Mass flow rate is proportional to the square root of the differential pressure multiplied by the steam line pressure.

$$m \ \alpha \ \sqrt{P(\Delta P)}$$

This allows comparison of steam mass flow rate to feedwater mass flow rate. Steam pressure is indicated on the control board for all three channels of each steam generator, 1A(B,C,D) STEAM GENERATOR 'SM PRESS'. The three indications for B & C S/Gs are on channels 1,2, & 3. The three indications for A & D S/Gs are on channels 1,2, & 4. The indications have a range of 0-1300 psig.

Steam flow is indicated on the control board for both channels of each steam generator, 1A(B,C,D) STEAM GENERATOR 'SM FLOW' for channels 1&2 with a range of 0-120%. The channel to be used for level control is selected using the switch '1A S/G STM FLOW SELECT', for example. (located on the main control board next to the feedwater control valve controllers). There is one switch per loop (S/G), with CH 1 & CH2 positions, and normally channel 1 is selected for control. This switch fails to the channel 1 position on a selector switch relay failure.

Isolation amplifiers separate protection and control circuits to prevent a control fault from affecting protection. Steam flow for the channel selected is recorded on the main control board, one recorder per loop. The signal for steam flow goes to the flow summing amp and is compared to feedwater flow.

2.1.4. The flow mismatch signal is equal to the feedwater flow minus the steam flow.

2.1.5. To maintain constant S/G level, steam flow = feed flow. If feedwater flow is low, annunciator S/G A (B,C,D) FLOW MISMATCH LOW CF FLOW, will alarm when CF flow is $.75 \times 10^6$ lb/hr less than steam flow. If steam flow is low, annunciator S/G A (B,C,D) FLOW MISMATCH LOW STM FLOW, will alarm when STM flow is $.75 \times 10^6$ lb/hr less than CF flow.

7.2 Steam Generator Level Control (MC-CF-IFE-1) 11/18/05

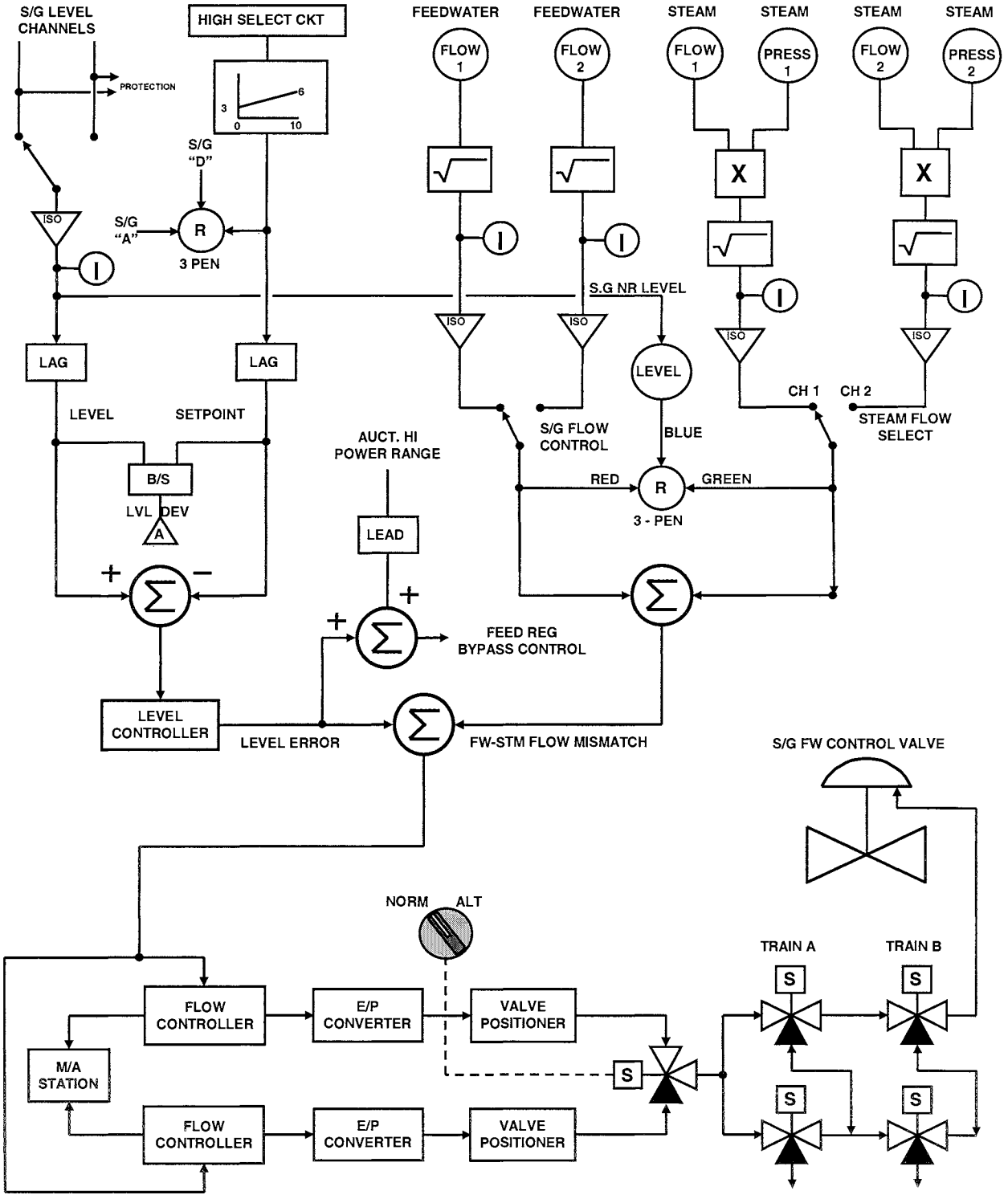

7.0 DRAWINGS

Objective #3, 4

7.1. Main Steam System (MC-STM-SM-1) 9/9/02

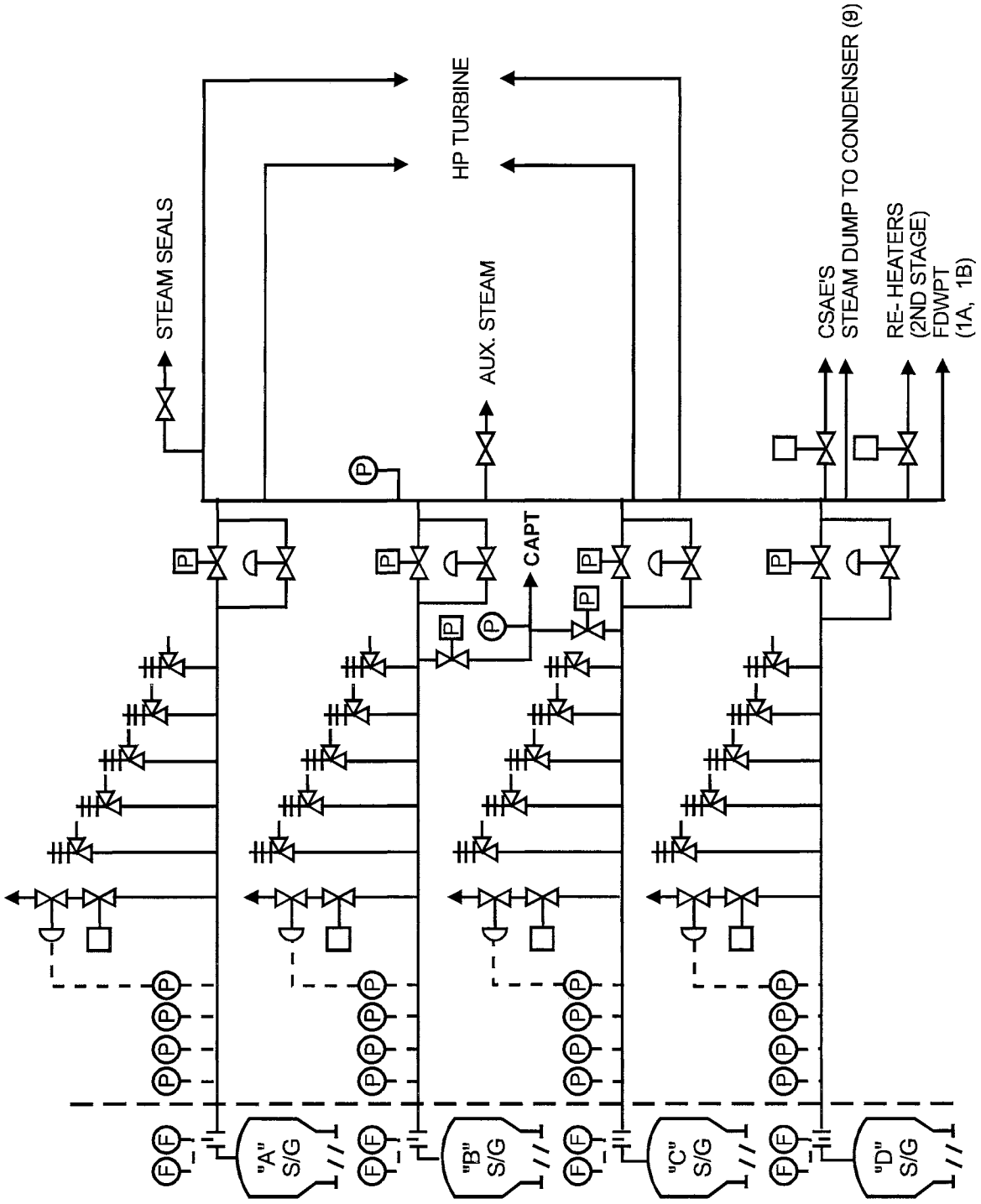

Objective #6 & #10

2.1.3. Steam Flow

There are two steam flow channels per steam generator. To measure steam flow, differential pressure is measured across the flow restrictor in the top of the steam generator. To compensate for density, the differential pressure is multiplied by the steam line pressure. If this compensation were not used, volume flow would be measured. Mass flow rate is proportional to the square root of the differential pressure multiplied by the steam line pressure.

$$m \ \alpha \ \sqrt{P(\Delta P)}$$

This allows comparison of steam mass flow rate to feedwater mass flow rate. Steam pressure is indicated on the control board for all three channels of each steam generator, 1A(B,C,D) STEAM GENERATOR 'SM PRESS'. The three indications for B & C S/Gs are on channels 1,2, & 3. The three indications for A & D S/Gs are on channels 1,2, & 4. The indications have a range of 0-1300 psig.

Steam flow is indicated on the control board for both channels of each steam generator, 1A(B,C,D) STEAM GENERATOR 'SM FLOW' for channels 1&2 with a range of 0-120%. The channel to be used for level control is selected using the switch '1A S/G STM FLOW SELECT', for example. (located on the main control board next to the feedwater control valve controllers). There is one switch per loop (S/G), with CH 1 & CH2 positions, and normally channel 1 is selected for control. This switch fails to the channel 1 position on a selector switch relay failure.

Isolation amplifiers separate protection and control circuits to prevent a control fault from affecting protection. Steam flow for the channel selected is recorded on the main control board, one recorder per loop. The signal for steam flow goes to the flow summing amp and is compared to feedwater flow.

2.1.4. The flow mismatch signal is equal to the feedwater flow minus the steam flow.

2.1.5. To maintain constant S/G level, steam flow = feed flow. If feedwater flow is low, annunciator S/G A (B,C,D) FLOW MISMATCH LOW CF FLOW, will alarm when CF flow is $.75 \times 10^6$ lb/hr less than steam flow. If steam flow is low, annunciator S/G A (B,C,D) FLOW MISMATCH LOW STM FLOW, will alarm when STM flow is $.75 \times 10^6$ lb/hr less than CF flow.

CF Flow transmitter fails low : Due to CF Flow indicating less than SM flow the Flow Error causes the CF Control Valves to open . S/G level will increase toward the (P14) setpoint where a Turbine/Reactor trip occurs.

CF Flow transmitter fails high: Due to CF Flow indicating greater than SM flow the Flow Error causes the CF Control Valves to throttle closed. S/G level will decrease and approach the Lo Lo Level Reactor Trip setpoint .

Steam Flow transmitter fails low : Due to SM flow indicating less than CF flow, the resulting flow error will close the CF Control valve. S/G Level will decrease toward the Lo Lo Level Reactor trip Setpoint

Steam Flow transmitter fails high : Due to SM flow indicating greater than CF flow, the Flow Error causes the CF Control Valves to open . S/G level will increase toward the (P14) setpoint where a Turbine/Reactor trip occurs.

Steam Pressure transmitter fails low: Since the SM Pressure signal is used to density compensate the SM Flow, the effect will be the same as a Steam Flow transmitter failing low.

Steam Pressure transmitter fails high: the effect will be the same as a Steam Flow transmitter failing high.

S/G N/R Level transmitter fails low: Due to indicated level less than program , the Level Error causes the CF Control Valve to open . S/G level will increase toward the (P14) setpoint where a Turbine/Reactor trip occurs.

S/G N/R Level transmitter fails high: Due to indicated level greater than Program , the resulting Level Error will close the CF Control Valve. S/G Level will decrease toward the Lo Lo Level Reactor trip Setpoint .

For a faulty input channel, select MAN on the Valve controller and maintain level. Swap faulty channels using the '1A (B,C,D) S/G STM FLOW RECORDER CHANNEL SELECT' switch the '1A (B,C,D) S/G CF FLOW RECORDER SELECT' switch or the "1A (BCD) S/G N/R LEVEL RECORDER SELECT" switch, as appropriate. After verifying the recorder for the affected instrument returns to the value of the selected channel, return the S/G CF Control Valve controller to AUTO and verify proper operation.

3.2.3. Controller Malfunction:

A malfunction of the redundant portion of the controller such as a driver card or E/P converter would cause the CF Control valve to open or close without a change in the level or flow error. The operator response would be to place the affected controller in manual and attempt to control level. If manual control was not effective the redundant channel would be selected by placing the CONTROL VALVE SELECTOR Switch to ALT.

ACTION/EXPECTED RESPONSE	RESPONSE NOT OBTAINED

B. Symptoms

- **CF control or bypass valve failures:**
  - S/G level(s) - GOING UP OR DOWN IN AN UNCONTROLLED MANNER.
- **CF pump malfunctions:**
  - S/G level(s) - GOING UP OR DOWN IN AN UNCONTROLLED MANNER
  - CF pump(s) - TRIPPED WITH TURBINE IMPULSE PRESSURE LESS THAN 56% (400-410 PSIG)
  - CF pump(s) at rollback speed due to Reactor Trip breakers opening.
- **CF isolation on any S/G:**
  - "S/G A FDW ISOLATED" (1SI-4) - LIT
  - "S/G B FDW ISOLATED" (1SI-4) - LIT
  - "S/G C FDW ISOLATED" (1SI-4) - LIT
  - "S/G D FDW ISOLATED" (1SI-4) - LIT.

CF Flow transmitter fails low : Due to CF Flow indicating less than SM flow the Flow Error causes the CF Control Valves to open . S/G level will increase toward the (P14) setpoint where a Turbine/Reactor trip occurs.

CF Flow transmitter fails high: Due to CF Flow indicating greater than SM flow the Flow Error causes the CF Control Valves to throttle closed. S/G level will decrease and approach the Lo Lo Level Reactor Trip setpoint .

Steam Flow transmitter fails low : Due to SM flow indicating less than CF flow, the resulting flow error will close the CF Control valve. S/G Level will decrease toward the Lo Lo Level Reactor trip Setpoint

Steam Flow transmitter fails high : Due to SM flow indicating greater than CF flow, the Flow Error causes the CF Control Valves to open . S/G level will increase toward the (P14) setpoint where a Turbine/Reactor trip occurs.

Steam Pressure transmitter fails low: Since the SM Pressure signal is used to density compensate the SM Flow, the effect will be the same as a Steam Flow transmitter failing low.

Steam Pressure transmitter fails high: the effect will be the same as a Steam Flow transmitter failing high.

S/G N/R Level transmitter fails low: Due to indicated level less than program , the Level Error causes the CF Control Valve to open . S/G level will increase toward the (P14) setpoint where a Turbine/Reactor trip occurs.

S/G N/R Level transmitter fails high: Due to indicated level greater than Program , the resulting Level Error will close the CF Control Valve. S/G Level will decrease toward the Lo Lo Level Reactor trip Setpoint .

For a faulty input channel, select MAN on the Valve controller and maintain level. Swap faulty channels using the '1A (B,C,D) S/G STM FLOW RECORDER CHANNEL SELECT' switch the '1A (B,C,D) S/G CF FLOW RECORDER SELECT' switch or the "1A (BCD) S/G N/R LEVEL RECORDER SELECT" switch, as appropriate. After verifying the recorder for the affected instrument returns to the value of the selected channel, return the S/G CF Control Valve controller to AUTO and verify proper operation.

3.2.3. Controller Malfunction:

A malfunction of the redundant portion of the controller such as a driver card or E/P converter would cause the CF Control valve to open or close without a change in the level or flow error. The operator response would be to place the affected controller in manual and attempt to control level. If manual control was not effective the redundant channel would be selected by placing the CONTROL VALVE SELECTOR Switch to ALT.

OBJECTIVES

No.	OBJECTIVE	NLO	NLOR	LPRO	LPSO	LOR
9.	Concerning the S/G PORV's;					
	• List the open and close set points.	X	X	X	X	X
	• Discuss local operation of the valves.	X	X	X	X	X
	• Describe the operation and control of the valves.	X	X	X	X	X
10.	Concerning the Steam line Isolation signals;					
	• List the Steam line Isolation signals.	X	X	X	X	X
	• List the components affected by a MSI signal	X	X	X	X	X
	• State the set points and logic requirements for initiation.	X	X	X	X	X
	• Describe any operator actions required to reset the signal.			X	X	X
11.	Concerning the Main Steam line Isolation Valves;					
	• State the purpose of the Main Steam line Isolation Valves.	X	X	X	X	
	• Describe the operation and control during opening and closing.			X	X	X
	• Explain the importance of establishing less than 50 psid across the MSIV's prior to opening.			X	X	X
12.	Evaluate plant parameters to determine any abnormal system conditions that may exist.			X	X	X
13.	Concerning the Tech Specs related to the Main Steam System;					
	• Given the LCO title, state the LCO (including any COLR values) and applicability			X	X	X
	• For any LCO's that have action within one hour, state the action.			X	X	X
	• Given a set of parameter values or system conditions, determine if any Tech Spec LCO(s) is(are) not met and any action(s) required within one hour.			X	X	X
	• Given a set of plant parameters or system conditions and the appropriate Tech Specs, determine the required action.			X	X	X
	• Discuss the basis for a given Tech Spec LCO or Safety Limit.				X	*
	* SRO Only					

CLASSROOM TIME (Hours)

NLO	NLOR	LPRO	LPSO	LOR
NA	2	2	2	2

OBJECTIVES

	OBJECTIVE	NLO	NLOR	LPRO	LPSO	LOR
1.	State the purpose of the S/G Level Control System.		X	X	X	
2.	Draw the S/G Level Control System per training handout MC-CF-IFE-5.		X	X	X	
3.	Draw the S/G Level Program per training handout MC-CF-IFE-4and label all axis.		X	X	X	
4.	Explain the phenomenon of S/G level shrink and swell.		X	X	X	
5.	Explain the reasons for S/G minimum and maximum water levels, including how this relates to S/G programmed level.		X	X	X	X
6.	Discuss the input signals to the S/G level error, FF-SF mismatch, and the Nuclear Power controlling circuit.		X	X	X	X
7.	Describe the operation of the valves controlled by S/G Level Control System.		X	X	X	X
8.	Evaluate plant parameters and status indicators to determine any abnormal system conditions that may exist.			X	X	X
9.	Describe the protection (signals and setpoints) associated with S/G level. (logic not required)		X	X	X	X
10.	Describe the controls and indications associated with the S/G Level Control System.		X	X	X	X
11.	For any S/G Level Control System input signal failure, determine the effect and evaluate operator action to be taken.			X	X	X

Examination Outline Cross-reference:	Level	RO	SRO
	Tier #	2	
	Group #	2	
	K/A #	041 A3.03	
	Importance Rating	2.7	

(Ability to monitor automatic operation of the SDS, including: Steam flow)

Proposed Question: Common 36

With Unit 2 at 100% power the following conditions exist:

- A Loss of Off-site Power occurs.
- Tavg is 564°F and decreasing.

Which ONE (1) of the following describes expected Control Room indications for the present conditions?

A. Steam Dump valve green (closed) position indicating lights only - LIT, NO Steam flow indicated on ANY SG.

B. Steam Dump valve green (closed) position indicating lights only - LIT, Steam flow indicated on ALL SGs.

C. Steam Dump valve red (open) position indicating lights only - LIT, NO Steam flow indicated on ANY SG.

D. Steam Dump valve red (open) position indicating lights only - LIT, Steam flow indicated on ALL SGs.

Proposed Answer: **B**

Explanation (Optional):

Drawing 7.1 of OP-MC-STM-IDE shows that the Steam Dump system by itself does NOT include a Steam flow indication separate than that of the Main Steam System. Drawing 7.1 of OP-MC-STM-SM indicates that each of the four steam generators have steam flow transmitters that will provide indication of Steam Dump operation. If the Steam Dump valves open, a corresponding increase in steam flow will occur on the steam flow from each unisolated Steam Generator. Additionally, if the SG PORVs, Main Steam Safety Valves or the Steam Supply to the TD CA Pump (B&C SG Only) are open, steam flow will also increase.

OP-MC-STM-IDE (p15) states that limit switches provide control room indications when individual steam dump valves are fully open or closed. Both lights will be lit when valve is modulating.

OP-MC-STM-IDE (p27) states that the C-9 interlock blocks steam dump to the condenser if vacuum is low or there is insufficient circulating water flow. The LOOP will stop RC Pumps and cause Condenser Vacuum to be lost blocking Steam Dump operation.

A. Incorrect. SG PORVs are open causing Steam Flow indication (See B)

B. Correct. C-9 has blocked the Steam Dump operation, and the Steam Dump Valve position indicating lights will be green (Closed). However, the SG PORVs are set to automatically open at SG Pressure of 1125 psig. Tavg is higher than Tsat of the SG and therefore the SG PORVs will still be open causing steam flow indication on all four SGs.

C. Incorrect. While steam flow will be indicated due to the open SG PORVs, C-9 has blocked Steam Dump Valves from opening and therefore the red indicating lights lit on the Steam Dump valves would not be an expected response.

D. Incorrect. While steam flow will be indicated due to the open SG PORVs, C-9 has blocked Steam Dump Valves from opening and therefore the red indicating lights lit on the Steam Dump valves would not be an expected response.

Technical Reference(s)	OP-MC-STM-IDE p15, 28, Rev 29	(Attach if not previously provided)
	OP-MC-STM-SM, p15,70 , Rev 25	(Including version or revision #)

Proposed references to be provided to applicants during examination: Steam Tables

Learning Objective: STM-IDE #5, 6 (As available)

Question Source:	Bank #		
	Modified Bank #	609	(Note changes or attach parent)
	New		

Question History: Last NRC Exam

Question Cognitive Level:	Memory or Fundamental Knowledge	
	Comprehension or Analysis	X

10 CFR Part 55 Content: 55.41 7

55.43 _____

Comments:
KA is matched because item evaluates abnormal condition where applicant has to determine valve indication as well as whether any steam flow indication will exist

Question 609 ASTMIDER03 ASTMIDER03
1 Pt Given the following conditions:

- A Loss of Off-site Power is in progress
- Tavg is 554 □F
- Steam dumps are placed in the Steam Pressure mode
- Steam dump demand is manually increased to begin cooldown, but the steam dumps will NOT open

Which one of the following correctly explains why the steam dumps will NOT open?

A. P-12, Lo-Lo Tavg, has disarmed the steam dumps

B. P-4, Reactor Trip, has disarmed the steam dumps

C. C-9, Condenser Available, has disarmed the steam dumps

D. The steam dump demand will not work in manual when the steam dumps are in the Steam Pressure mode

Answer 609

C
STM-IDE, objective 5, 6

7.0 DRAWINGS

7.1. Steam Dump System Valve Arrangement (9/16/03)

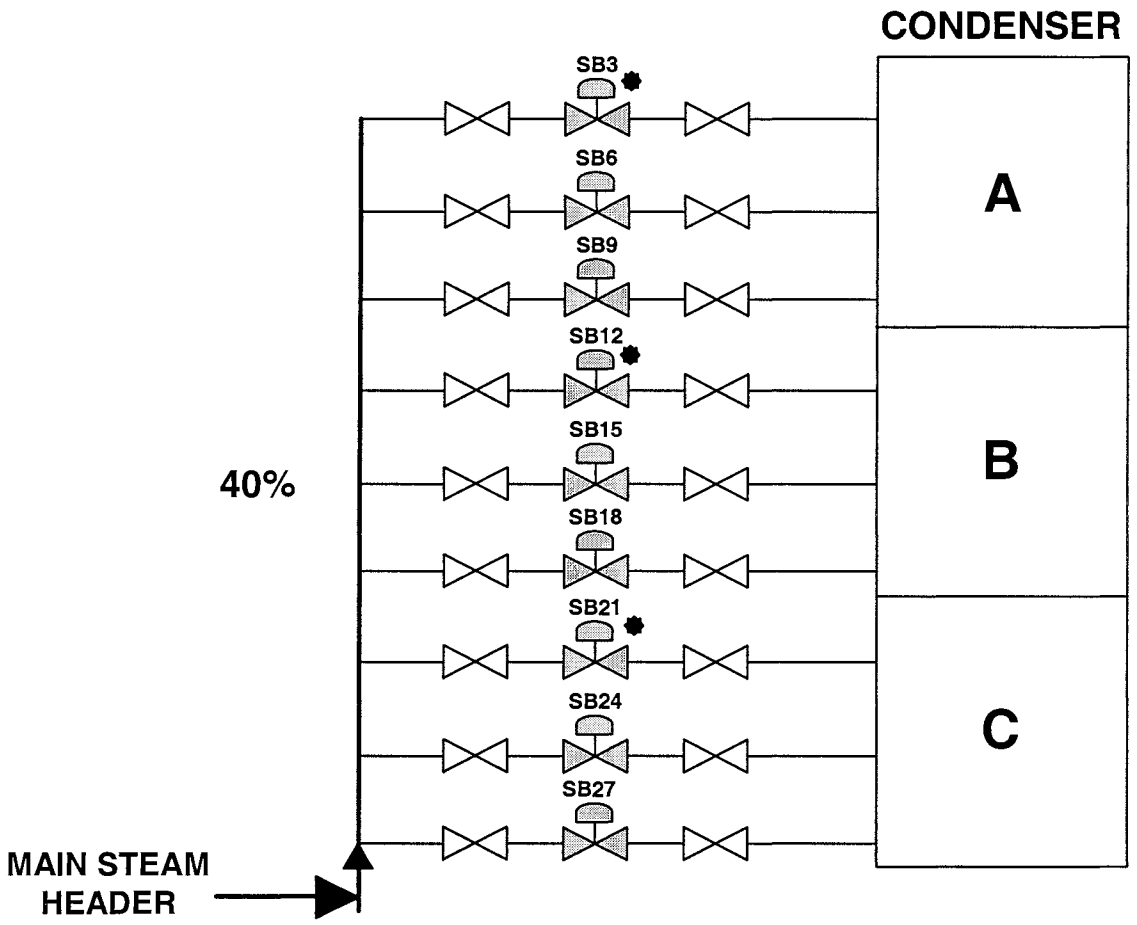

✸ Cooldown Below P12

7.0 DRAWINGS

Objective #3, 4

7.1. Main Steam System (MC-STM-SM-1) 9/9/02

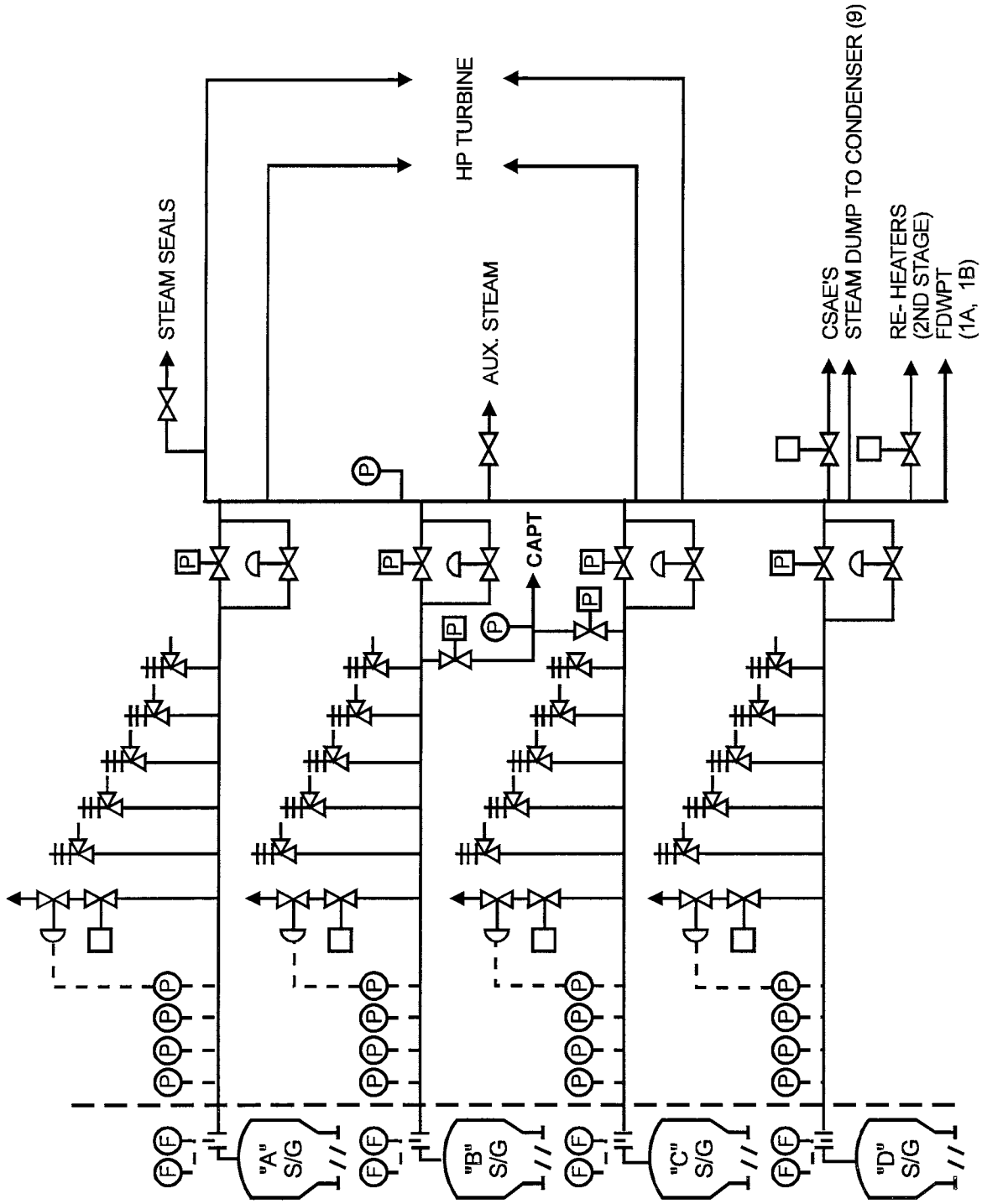

2.0 COMPONENT DESCRIPTION

2.1. Pneumatic Dump Valve Control - Condenser Dump Valves

Objective #3

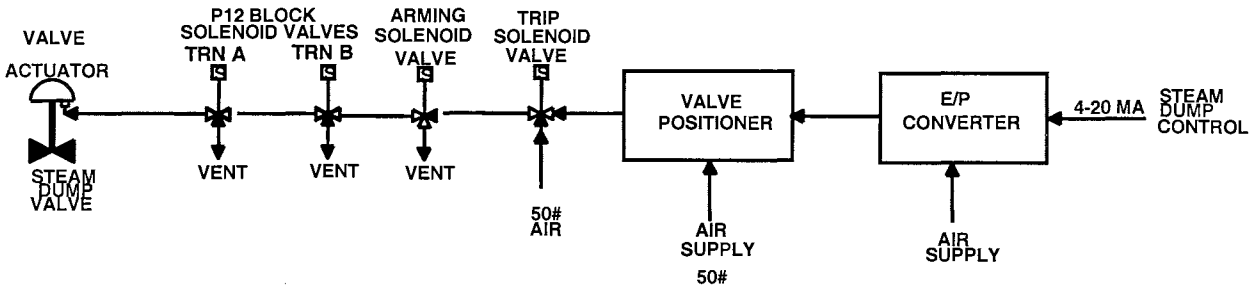

7.3, Condenser Dump Valve Pneumatic Control (9/16/03)

NOTE: Each valve has its own E/P converter, valve positioner, and set of solenoid valves.

The Condenser Dump Valves use pneumatic valve actuators. On a loss of air supply, the dump valves will close. The Steam Dump Control System supplies a 4-20ma electrical signal which is converted to a 3-15 psig pneumatic control signal by the E/P converter (4ma = 3 psig = dump valve closed). The valve positioner provides valve actuating air pressure and volume to maintain a valve position proportional to control signal.

The three solenoid valves, P-12 Block (Train A&B) and the Arming solenoid, must be energized to allow the air to reach the valve actuator and position the steam dump valve. At normal steady state operating temperature, T_{avg} > 553 ºF, the P-12 solenoids will be energized and the arming solenoid deenergized, as shown above.

A trip solenoid valve, when energized, aids in faster valve response time to reach the full open position. When de-energized, the modulating air signal from the valve positioner is sent to the valve actuator. When energized, 50 psig supply air will go directly to the actuator. This will cause the dump valve to open faster (three seconds) than it could be modulated open. The trip solenoid valves for a particular bank of valves are energized by trip bistables when the error signal used to modulate the valves exceeds the value corresponding to a full open demand.

Limit switches provide control room indications when individual dump valves are fully open or closed. Both lights will be lit when valve is modulating.

Objective #6

Condenser Available Interlock (C-9)

This interlock blocks steam dump to the condenser if vacuum is low or there is insufficient circulating water flow. If Pressure switch 1ZMPT5030, located in condenser Section A, indicates condenser pressure is greater than 20" vacuum and at least two Circulating Water Pump breakers are closed, C-9 will be satisfied and permissive light C-9 COND AVAILABLE TO STEAM DUMP will be illuminated.

Objective #6

Loss of Load Interlock (C-7A)

Turbine load is measured by the turbine impulse chamber pressure Channel II transmitter SMPT5220.

NOTE: In order to meet the single failure criteria . Impulse Pressure Channel 1 is used to develop the T_{ref} signal used in the Load Rejection Controller.

Turbine pressure (FIRST STAGE TURBINE PRESSURE II) goes to the plant computer and to control board indicator. The derivative part of the circuit has the output proportional to the size of a step change in pressure or to rate of change for a ramp pressure change. Output is zero for an unchanging pressure signal. The Condenser arming bistable will actuate on a 10% step or > 5%/min ramp load decrease. (C7A). C-7A, LOSS OF LOAD INTLK COND DUMP will illuminate.

Objective #6

Steam exits from S/G by a 34" main steam line. Steam lines exit Containment into the lower portions of the doghouses.

- **A and D in the exterior doghouse**
- **B and C in the interior doghouse**

2.2. Main Steam line Drains

2.2.1. Isolation valves (SM83, 89, 95 & 101)

A 2 inch drain line taps off the bottom of each main steam line. Each drain line has an air operated isolation valve in it which is Normally Open and FAILS CLOSED on loss of instrument air pressure or upon loss of power to its Solenoid valve(s).

2.2.2. Drain Valves (SM78, 84, 90 & 96)

These drain valves are provided to automatically drain water from steam lines, to prevent water accumulation. Controls are located on MC-9. They are normally selected to auto to allow automatic modulation of drain valve. Operator may manually open drain valve by selecting "OPEN". A new procedure enclosure (SM Drain Valve Failure) is provided if automatic function is lost. The operator is directed to cycle the drain valves at different times based on different power levels.

2.3. Power Operated Relief Valves (PORV's)

The main steam lines rise to the upper portions of the doghouses where a six inch line taps off the top of each line for the PORV.

Objective #9

The PORV's assist the lowest setting safety valve during transients. The PORV lift setpoint is 1125 psig. This ensures the PORV is open prior to the first safety valve setpoint (1170 psig) being reached. They provide a margin for safety valve reseating.
The PORV reclose at 1092 psig. This pressure is low enough to ensure the safety valves reseat.
They also provide a means of removing heat from the NCS if the steam dumps or turbines are not available.
The PORV's are air operated valves that FAIL CLOSED on loss of instrument air pressure (VI), loss of power to valve solenoid or receipt of a Main Steam line isolation signal.

2.3.1. PORV Controls

- **PORV Mode select switch (Auto or Manual)**
- **Manual loader - 0 to 100%**

CLASSROOM TIME (Hours)

NLO	NLOR	LPRO	LPSO	LOR
NA	2	3	3	2

OBJECTIVES

No.	Objective	NLO	NLOR	LPRO	LPSO	LOR
1.	State the purpose of the Steam Dump Control System		X	X	X	
2.	List the banks of steam dumps and the number of valves in each bank.		X	X	X	
3.	Sketch the valve arrangement per Drawing 7.3, Steam Dump Valve Pneumatic Control.		X	X	X	
4.	Describe the effect of a failed or stuck open steam dump valve on primary plant parameters, and determine any compensatory Operator action			X	X	X
5.	Explain the operation of the system in steam pressure, plant trip and load rejection mode. Include the fast response "trip open bistables". Include the input signals for each control.		X	X	X	X
6.	Describe all control and permissive interlocks (C9, C7A, P4, P12) required for various modes of operation.		X	X	X	X
7.	Describe all selector switches and their functions for various modes of operation		X	X	X	X
8.	Describe the effect on the system resulting from a failure of each input to the system.		X	X	X	X
9.	Explain what occurs in the IDE System during start-up, power operation, shutdown and cooldown of the plant. Include all manual functions required to be performed by the operator during these modes.			X	X	X
10.	Relate % steam dump demand indication to corresponding steam dump valve operation			X	X	X

Examination Outline Cross-reference:	Level	RO	SRO
	Tier #	2	
	Group #	2	
	K/A #	071 A1.06	
	Importance Rating	2.5	

(Ability to predict and/or monitor changes in parameters(to prevent exceeding design limits) associated with Waste Gas Disposal System operating the controls including: Ventilation system)

Proposed Question: Common 37

Both Units are in at 100% power:

- The VA System is operating normally, with the 1A/1B AHU, Filtered Exhaust Fans, and Unfiltered Exhaust fans all running.
- The Filtered Exhaust Filter is bypassed.
- While operating a valve associated with Waste Gas Compressor A, a leak develops and releases approximately 500 ft^3 of radioactive gas into the Auxiliary Building over a 2 hour period.

Which ONE (1) of the following could detect this leak **and** cause an automatic response by the VA System?

A. 1EMF-36 (Unit Vent Gas) **ONLY**

B. 1EMF-41 (Aux Building Ventilation) **ONLY**

C. **EITHER** 1EMF-36 (Unit Vent Gas) **OR** 1EMF-37 (Unit Vent Iodine)

D. **EITHER** 1EMF-41 (Aux Building Ventilation) **OR** 1EMF-37 (Unit Vent Iodine)

Proposed Answer: **D**

Explanation (Optional):

A. Incorrect. The only automatic action associated with 1EMF-36 is to close WG-160. (WE-WG, p29)

B. Incorrect. While 1EMF-41 will cause an automatic action (Filter will be placed in service), 1EMF-37 will also cause an action (Shutdown Unfiltered Exhaust Fans/VA AHUs).

C. Incorrect. The only automatic action associated with 1EMF-36 is to close WG-160.

D. Correct. 1EMF-41 will cause Filter to be placed in service, and 1EMF-37 will Shutdown Unfiltered Exhaust Fans/VA AHUs.

Technical Reference(s)	OP-MC-WE-WG p29, Rev 11	(Attach if not previously provided)
	OP-MC-PSS-VA p29, Rev 20	(Including version or revision #)
	OP-MC-WE-EMF p21, 27 Rev 28	

Proposed references to be provided to applicants during examination: None

Learning Objective: PSS-VA #12, WE-EMF #3 (As available)

Question Source:	Bank #		
	Modified Bank #		(Note changes or attach parent)
	New	X	

Question History: Last NRC Exam NA

Question Cognitive Level:	Memory or Fundamental Knowledge	X
	Comprehension or Analysis	

10 CFR Part 55 Content:	55.41	4, 13
	55.43	

Comments:
KA is matched because the item evaluates effect on Aux Building Ventilation (VA) system for a failure of Waste Gas Compressor seals

Objective #5

1WG160, Waste Gas Discharge Flow Controller trips closed when:

- **Unit vent gas 1EMF36(L) (Unit 1 only) trip two setpoint is reached.**
- **Waste gas 1EMF50(L) trip two setpoint is reached.**

Waste Gas Radiation Monitor (2 channels) and Plant Vent Radiation Monitor are indicated on the Waste Gas Processing Panel.

Alarms

The following annunciators alarm on the Waste Gas Panel.

- Gas Tank Pressure High (One for each of 8 tanks).
- Waste Gas Moisture Separator Level High-Low (2).
- Waste Gas Monitor Radiation High.
- Plant Vent Monitor Radiation High.
- Waste Gas Moisture Separator High Pressure (2).
- Waste Gas Moisture Separator Low Pressure (2).
- Waste Gas Compressor Suction Pressure Low.
- Recombiner No. 1 Alarm.
- Recombiner No. 2 Alarm.
- N_2 Header Supply Pressure Low.
- Primary Makeup Water to Gas Decay Tanks High Volume.
- H_2 Header Supply Pressure Low.
- H_2 Recombiner HX KC Outlet Flow Low (2).
- Waste Gas Compressor HX KC Flow Low (2).

Any of these alarms will actuate the Waste Gas Panel Trouble Annunciator in the Control Room

3.2. Abnormal and Emergency Operation

None

Objective # 12

3.2.3 Auxiliary Building Ventilation System **response to EMF Signals**

- EMF-41 "Auxiliary Building Ventilation" Trip II will place the filtered exhaust filters in service by closing the bypass damper and opening the filter inlet and outlet dampers on both units filter trains
- EMF-35(L) "Unit Vent Particulate (Low Range)" or EMF-37 "Unit Vent Iodine" Trip II on either unit will shutdown all the Unfiltered Exhaust Fans (which will secure the AB Supply AHUs).
- EMF-53 "Contaminated Materials Warehouse Ventilation" Trip II will secure the contaminated parts ventilation exhaust fan, which secures the supply AHU and secures the Waste Handling Exhaust Fans, which secures the associated Waste Handling Supply Units.
- EMF-52 "Interim Radwaste Facility Ventilation" Trip II will secure the Interim Radwaste Facility Exhaust Fan, which secures it's associated Supply AHU.

4.0 TECHNICAL SPECIFICATIONS

Objective # 13

4.1 Tech Spec 3.7.11 Auxiliary Building Filtered Ventilation Exhaust System

4.2 SLC 16.9.16 Auxiliary Systems – Area Temperature Monitoring

The purpose of the auto actions:

- **EMF34 effluent is directed to ground water drainage sump "A", therefore isolating this flowpath prevents contaminating this sump.**
- **S/G blowdown blowoff tank effluent may be directed to either the condensate system or the turbine building sump, isolating blowdown will prevent contaminating these systems via the blowdown pathway.**
- **Conventional sampling effluent may be directed to the CST or turbine building sump, isolating conventional sampling will prevent contaminating these systems via this pathway.**

These channels use dual range gamma liquid assembly. The low range uses a gamma liquid (NaI Scint) while the high range uses a GM detector.

2.1.4 Unit Vent Airborne Monitor

The following channels are used to monitor the unit vent:

- 1(2) EMF 35 (L) Unit 1(2) Unit Vent Particulate (Low Range)
- 1(2) EMF 36 (L) Unit 1(2) Unit Vent Gas (Low Range)
- 1(2) EMF 36 (H) Unit 1(2) Unit Vent Gas (High Range)
- 1(2) EMF 37 Unit 1(2) Unit Vent Iodine

Objective # 2

These EMFs, utilize a sample probe located within the Unit Vent to monitor, record, and alarm the gaseous, iodine and air particulate activity levels released to the atmosphere from the combined ventilation systems within the station.

Atmosphere from the Containment Purge, Containment Annulus Ventilation, Auxiliary Building Ventilation, Condenser Air Ejector, Fuel Pool Ventilation and other potentially radioactive systems are discharged through the Unit Vent.

Objective # 2, 3

The automatic actions for these EMFs are as follows:

- **A Trip 2 high radiation alarm on 1EMF 35 (L), 1EMF 37, 2EMF 35 (L), or 2EMF 37 will stop Auxiliary Building Unfiltered Exhaust Fans 1ABFXF-1A, 1ABFXF-1B, 2ABFXF-1A, and 2ABFXF-2B.**
- **A Trip 2 high radiation alarm on 1EMF 36 (L) will close 1WG160 to terminate waste gas discharge.**
- **1EMF 36 (L) will also alarm and indicate at the Waste Gas Processing Panel.**

2.1.6 Auxiliary Building Ventilation Monitor

The Auxiliary Building is monitored by 0EMF 41 - Aux Building Ventilation.

Objective # 2, 5

EMF-41 uses a scanner capable of monitoring 12 points within the Auxiliary Building ventilation ducts. These points are located to provide maximum coverage of Auxiliary Building rooms. (refer to Drawing 7.2 and 7.3)

NOTE: Sample point 6 has been deleted, so only 11 points are currently monitored.

A timed sample system is used to control the solenoid valves (refer to Drawing 7.4). **Each sample point takes about 2.5 minutes, 1.5 minutes to purge and 1 minute to sample. Thus, each point will be sampled twice per hour.** The flow rate for each sample line is 1 scfm. This 1 scfm from the sampled line is routed through the detector. A SCAN/STOP switch is provided to control EMF 41 operation mode: (refer to Drawing 7.4)

- **Scan Mode - provides automatic sequential sampling of 11 Aux. Bldg areas. PT/1/A/4600/03B requires the toggle switch to be in the scan position.**
- **Stop - provides continuous sampling of one area.**

A ready light - illuminates while EMF is sampling and off while purging. A STEP switch allows manual selection of desired sample point. This option is available in the SCAN mode only. A point window provides an LED readout that displays selected sample point. When the scanner is selected to a single point, remote readout to the OAC and Pi database is disabled. Only the local Control Room module readout is available.

Objective # 2, 3

On a Trip 2 high radiation alarm, Aux. Building Ventilation will be passed through filter units ABFU-1 and ABFU-2 (filter bypass will be terminated). The following dampers will open:

- 1ABF-D-4A 2ABF-D-4A
- 1ABF-D-4B 2ABF-D-4B
- 1ABF-D-5A 2ABF-D-5A
- 1ABF-D-5B 2ABF-D-5B

The following dampers will close:

- 1ABF-D-3
- 2ABF-D-3
- 1ABF-D-6
- 2ABF-D-6

OBJECTIVES

	OBJECTIVE	NLO	NLOR	LPRO	LPSO	LOR
10	Describe the operation of the VA System following a Blackout and/or Safety Injection signal.	X	X	X	X	X
11	Discuss when the VA Systems Filtered Exhaust Fan's "RESET" pushbutton will be used.	X	X	X	X	X
12	Discuss the response of the VA System to a Trip II alarm on the following EMFs. • EMF-35(L) Unit Vent Particulate (Low Range) • EMF-37 Unit Vent Iodine • EMF-41 Auxiliary Building Ventilation	X	X	X	X	X
13	Concerning the Technical Specifications related to the VA System:					
	• Given the LCO title, state the LCO (including any COLR values) and applicability.			X	X	X
	• For any LCO's that have action required within one hour, state the action.			X	X	X
	• Given a set of parameter values or system conditions, determine if any Tech Spec LCO's is(are) not met and any action(s) required within one hour.			X	X	X
	• Given a set of parameter values or system conditions and the appropriate Tech Spec, determine required action(s).			X	X	X
	• Discuss the bases for a given Tech. Spec. LCO or Safety Limit.				X	*
	* SRO ONLY					

CLASSROOM TIME (Hours)

NLO	NLOR	LPRO	LPSO	LOR
3	3	3	3	2

OBJECTIVES

SEQ	OBJECTIVE	NLO	NLOR	LPRO	LPSO	LOR
1	State the purpose of the Process and Area Radiation Monitoring System. WEEMF001	X	X	X	X	
2	List the process monitored by each EMF and why it is monitored. WEEMF002	X	X	X	X	X
3	Describe the automatic actions that occur as a result of a Trip alarm for each of the following EMFs • 1(2) EMF 31 Unit 1(2) Conv. Waste Treatment System • 1(2) EMF 34(L) Unit 1(2) Steam Generator Sample • 1(2) EMF 35(L) Unit 1(2) Unit Vent Part. (low range) • 1(2) EMF 36(L) Unit 1(2) Unit Vent Gas (low range) • 1(2) EMF 37 Unit 1(2) Unit Vent Iodine Monitor • 1(2) EMF 38(L) Unit 1(2) Cont. Part. (low range) • 1(2) EMF 39(L) Unit 1(2) Cont. Gas (low range) • 1(2) EMF 40 Unit 1(2) Cont. Iodine • 0EMF 41 Aux. Bldg Vent. • 1(2) EMF 42 Unit 1(2) Spent Fuel Bldg. Vent. • 1(2) EMF 44(L) Unit 1(2) Cont. Vent. Drain Tank • 1(2) EMF 46A/B Unit 1(2) Component Cooling • 0EMF 47 Boron Recycle Evap. Distillate (cont.)	X	X	X	X	X

{SEQ is the order in which the objective is first covered in the lesson plan)

Examination Outline Cross-reference:	Level	RO	SRO
	Tier #	2	
	Group #	2	
	K/A #	086 K5.03	
	Importance Rating	3.1	

(Knowledge of the operational implication of the following concepts as they apply to the Fire Protection System: Effect of water spray on electrical components)

Proposed Question: Common 38

Which ONE (1) of the following describes the primary fire suppression system used in the Unit 2 Cable Spreading Room, and the reason for this type of system?

A. A manually operated Mulsifyre system, because water spray is an effective means for extinguishing deep-seated Class C fires.

B. An automatically operated Mulsifyre system, because water spray reduces the risk of electrical explosion as opposed to deluge systems.

C. A manually operated Halon 1301 system, because halon provides effective extinguishing properties for electrical components with minimal spread of hazardous material.

D. An automatically operated Halon 1301 system, because water spray is NOT an effective means for extinguishing deep-seated Class C fires.

Proposed Answer: **A**

Explanation (Optional):

A. Correct. OP-MC-SS-RFY (p37) states that manually operated mulsifyre systems are provided for the Unit 1 and Unit 2 cable rooms and ETA HVAC equipment rooms. These systems are further described as "Consisting of a number of open spray nozzles with locked closed manual isolation valves."

B. Incorrect. Extensive use of Automatic deluge systems is employed at McGuire, typically protecting systems containing oil, or other class B fuels, as well as ventilation systems. This system is not automatically operated OP-MC-SS-RFY (p37)

C. Incorrect. Halon 1301 Total Flooding systems are used in the DG Rooms, the CA Pump rooms and the Computer Room in the Admin Building.

Plausible because Halon does provide protection against electrical fires by removing oxygen OP-MC-SS-RFY (p35)

D. Incorrect. Halon 1301 Total Flooding systems are used in the DG Rooms, the CA Pump rooms and the Computer Room in the Admin Building. Plausible because Halon does provide protection against electrical fires by removing oxygen OP-MC-SS-RFY (p47)

Technical Reference(s): OP-MC-SS-RFY p35-37, 47 Rev 26 (Attach if not previously provided)
(Including version or revision #)

Proposed references to be provided to applicants during examination: _____

Learning Objective: SS-RFY Obj 11 (As available)

Question Source:
Bank # _____
Modified Bank # 4578 (Note changes or attach parent)
New _____

Question History: Last NRC Exam NA

Question Cognitive Level:
Memory or Fundamental Knowledge X
Comprehension or Analysis _____

10 CFR Part 55 Content:
55.41 8
55.43 _____

Comments:
KA is matched because item evaluates knowledge of a system used to extinguish an electrical fire in the cable spreading room

Question 4578 SSRFY003 SSRFY003
1 Pt In an area where a Sprinkler or Mulsifyre System is the primary fire suppression system, a backup system is also utilized. What type of suppression system is normally used as a backup?

A. Hose Stations

B. A C-02 Suppression System

C. Halon 1301

D. Fire Hydrants

Answer 4578
A

2.9 Components/Areas Protected by Mulsifyre System

Objective #11

The Automatic deluge (Mulsifyre) systems, which provide fixed spray patterns of water similar to a sprinkler system, are provided for:

- **Main and station oil filled power transformers (1A, 1B, 2A & 2B)**
- **Auxiliary transformers(1ATA, 1ATB, 2ATA, & 2ATB)**
- **Auxiliary Electric Boiler oil filled transformers (1ATE, 2ATE)**
- **Turbine oil reservoirs, oil piping, and bearings in Unit 1 & 2 as follows:**
  - **Main Turbine piping and bearings**
  - **MTOT**
  - **FWPT lube oil reservoir**
  - **Hydrogen seal oil unit**
  - **D/G lube oil transfer storage tanks(clean and dirty)**
  - **Main Turbine lube oil transfer tanks**
  - **Oil Purifier areas**
  - **Lube Oil house in service building**
- **Acetylene and oxygen storage in the yard**

Manually operated mulsifyre systems are provided for the unit 1 & 2 cable rooms and for the 1(2)ETA HVAC equipment rooms. These systems consist of a number of open spray nozzles with locked closed manual isolation valves. When the valve is opened, water discharges from all the nozzles in the system.

The following HVAC filters contain built in deluge systems:

- **VE filters (1A, 1B, 2A, 2B)**
- **Fuel Pool area filters Unit 1 & 2**
- **Auxiliary Building exhaust filters (1A, 1B, 2A, 2B)**
- **Reactor Building Purge Exhaust filters (1A, 1B, 2A, 2B)**
- **Control Room Ventilation Unit 1 & 2**
- **Counting Room supply unit**
- **Incore Instrumentation room purge exhaust filter Unit 1 & 2**
- **Onsite TSC filter unit**

2.8 Components/Areas Protected by Sprinkler System

Objective #11

The Automatic sprinkler systems provide protection for the following major areas:

- **Selected areas in the Turbine Building (mezzanine and basement)**
- **The oil storage house**
- **The warehouse, maintenance shops, and shared equipment area (Service Building)**
- **The QA Warehouse**
- **The condenser pits**
- **The administration building (only certain storage areas)**
- **SSF Diesel Generator**
- **ND Pump Rooms (1A, 1B, 2A, 2B)**
- **CCP rooms (1A, 1B, 2A, 2B)**
- **RN Pumps (1A, 1B, 2A, 2B)**
- **Contaminated Warehouse**
- **Room 600 and 601 (RN Strainers, Motor driven CA pumps, WZ sump pumps and FDT Sump pumps**
- **Cable shaft**
- **Battery rooms**
- **KC Pumps (750, 733 elev)**
- **695 elev. corridor**
- **Equipment decon room**
- **NC Pumps 1A, 1B, 1C, 1D, 2A, 2B, 2C, 2D**
- **Lower Containment Filter Units 1A, 1B, 2A, 2B**
- **Pipe corridor Units 1 & 2**
- **Annulus Units 1 & 2**

Objective #19

The **Reactor Building fire header** is **charged by opening the air operated, safety related containment isolation valve, 1RF-821A (Unit #1 RF Cont. Outside Isol) or 1RF-832A (Unit #2 RF Cont. Outside Isol), from the control room on the respective unit's MC-9 (refer to Drawing 7.2).** These valves are normally **closed** in modes 1-4 except during emergencies. They have been exempted from on-line testing which means we don't do valve stroke timing testing on-line. The test acceptance criteria states that these valves must remain closed to prevent containment flooding and that is the justification for not testing. The TAC also states that these valves must be capable of opening; otherwise, that portion of RF is inoperable. Since these valves are not tested, they must remain closed for the penetration to be considered operable, but since they must be capable of opening we can't remove air or power from the valves either. Procedurally, we are not allowed to open these valves in modes 1-4 which is how we administratively control operability of the penetration. These valves close on an S_T signal, a loss of instrument air or loss of power to the solenoid. They must be manually reopened, if needed, following a closure. When the valves open, an annunicator will activate to indicate the header is pressurized. There is one containment isolation valve for each Reactor Building header. **The Annulus isolation valves, 1RF-27 (Unit 1 Annulus Sprinkler Hdr Isol) and 1RF-28 (Unit 2 Annulus Sprinkler Hdr Isol), are opened automatically by the annulus heat detectors or can be opened manually at the local panel on elev 733' at the lower Annulus door.** The Annulus header pressure switch is set to alarm if header pressure decreases to less than 65 psig which would indicate a loss of piping integrity.

2.12 Halon 1301 Fire Suppression System

Objective #20

2.12.1 Components/Areas Protected by the Halon System

The Halon 1301 Fire Suppression System provides protection for the following:

- **Emergency Diesel Generator rooms**
- **Turbine Driven Auxiliary Feedwater Pump**
- **Computer Room in Admin Bldg.**

1.0 INTRODUCTION

1.1 Purpose

Objective #1

The Fire Protection System is designed to perform and provide the following:

- **Provide fire protection in areas of the plant by means of portable extinguishers and manual hose stations.**
- **Provide fire extinguishment by fixed water sprinkler system or Halon 1301 extinguishment systems in areas of the plant containing equipment required to bring the unit to a safe shutdown condition.**
- **Provide automatic water spray (deluge) systems over oil hazard areas.**
- **Provide automatic Halon 1301 extinguishing systems in selected areas of the plant with appropriate alarms and warning devices to alert personnel to pending discharges.**
- **Provide maximum protection against an unsafe condition or damage to safety class equipment due to failure of any portion of the RF/RY System.**

1.2 General Description

Objective #2

The Fire Protection System (RF/RY) provides the plant area, Administration Building and exterior yard areas with protection from postulated fires. The RY denotes the part of the system outside of the building boundaries or in the yard. RF denotes the part of the system inside building boundaries. Included in this system are fire hydrants, hose stations, water suppression spray systems and Halon 1301 systems. Portable CO_2 extinguishers are located at strategic points so that backup fire fighting capability is available. In areas where automatic systems are provided, hose stations are strategically located for backup protection. Primary and backup water systems are separated by valves and supplied from two separate headers to prevent a single failure from impairing both systems.

The exterior Fire Protection System consists of an underground yard main which loops the periphery of the plant. Multiple connections to the Unit 1 & 2 Turbine Buildings and redundant connections to the Auxiliary Building are provided from this loop. Post indicator valves are arranged to provide isolation of portions of the main loop or branches for maintenance. Hydrants are spaced about every 250 feet along this header. Any part of the exterior system not underground is provided with a means to preclude freezing.

The conventional side Fire Protection System (Secondary side) consists of fire hydrants, hose stations, portable fire extinguishers, and spray systems. It provides protection in the Turbine Building, Service Building, Administration Building and other areas exterior to the Auxiliary and Reactor Building. These fire protection devices are located throughout the interior of the Turbine and Service Buildings and Admin Building.

A large carbon dioxide wheeled Fire Extinguishing unit has been placed in each Turbine Building basement for use on large electrical motors (HWP's or CBP's) or breaker panels.

Fire protection for the Auxiliary Building is provided by portable fire extinguishers, small hose stations, spray systems and halon suppression systems. The hose stations and sprinkler systems are connected to the Auxiliary Building header which loops each floor. Primary sprinkler systems and backup hose stations are separated by valves and feed from this loop in such a way that a single failure will not impair both systems. The Auxiliary Building header is normally pressurized by two 2.5 inch lines. These lines are capable of supplying sufficient water for any two hose stations or any automatic sprinkler system in the Auxiliary Building. There are two fire protection water supply headers which lead into the Auxiliary Building. Each header is equipped with a deluge valve in a 6' line which normally isolates the 12 inch supply line in order to protect the buildings ESF equipment from an inadvertent pipe break (flooding). In the event of a fire, the two deluge valves can be opened either from the control room, from breakglass stations located throughout the Auxiliary Building, or manually at the valves themselves.

Fire protection for the Unit 1 & 2 Reactor Buildings is provided by portable fire extinguishers, hose stations, and sprinkler systems. The hose stations and sprinkler systems are connected to the Auxiliary Building header. Two headers penetrate the Reactor Building wall with one supplying the annulus and the other supplying containment. The containment isolation valves are air operated valves controlled from the control room. The annulus isolation valves are air operated valves opened automatically by the heat and smoke detectors inside the annulus. The Containment headers are normally drained downstream of the isolation valves. The annulus headers are pressurized with the isolation valve closed. A pressure switch downstream of the isolation valve senses header pressure and is set to alarm in control room if header pressure is less than 65 psig. This pressure switch is used to ensure the integrity of the annulus header piping at all times. A low pressure condition could be indicative of a fire header pipe rupture.

Halon is a colorless, odorless, non-conductive gas that inhibits the chemical reaction of fuel and oxygen. In order for this to work effectively , the halon gas must be at a sufficient concentration in the air. Therefore it must not be allowed to be drawn off or diluted by the ventilation system or drift out through openings such as doors or open ventilation ducts after it has been discharged into a room. The Halon System has automatic and administrative features which will ensure a sufficient halon concentration can be delivered to the room and maintained. Thus the Halon System provides protection to vital pieces of equipment which are located in enclosed rooms. The Halon system consist of banks of halon bottles (a primary and reserve banks), control panels, automatic and manual actuation devices and sensors.

2.12.2 Diesel Generator Halon Fire Suppression System

The two Diesel Generators provided for each unit are protected by one Halon 1301 fire suppression system (refer to Drawing 7.8). This system has a main and reserve bank of cylinders. **It is designed so that a bank of cylinders will discharge into either of the Diesel Generator rooms if needed. Each Diesel Generator room is equipped with thermostats, pushbutton discharge stations, an abort switch, a selector valve and alarms. If there is a fire in a Diesel Generator room, the thermostats in this area automatically cause each of the following:**

- **An alarm and blue light**
- **Shutdown of air intake and discharge ports for the Diesel Generator**
- **Discharge of halon**
- **Opening of the selector valve for this room**
- **Trip the diesel**
- **Trip all lube and fuel oil pumps**

Actuation of the halon system can also be done manually by the manual discharge switches located on two panels in each room or by a manual lever located on the cylinder assembly. If the manual lever is used, the pilot valve which controls the opening of the selector valve must be manually opened.

This halon system is also equipped with a time delay device which will delay the discharge of halon for 20 seconds after an automatic actuation. This allows the operator time to abort the discharge. The time delay operates only on automatic actuation of the system.

Objective #21

Each Diesel Generator Halon Fire Suppression System is equipped with the following controls and indication:

- **A "Transfer Switch" (main/reserve positions) located at the halon cylinders.**
- **A manual actuator lever and pull key for each main and reserve halon bottle.**
- **Two Fire Protection Control Panels in each Diesel room (one at the front and rear of the room) each of which contain: (refer to Drawing 7.9)**
  - **Main Actuator pushbutton**
  - **Reserve Actuator pushbutton**
  - **An ABORT/OFF pushbutton**
- **A halon supply control valve (pilot valve) and pull key on one of the two halon actuation panels in each diesel room. (these panels are located near the door connecting the Diesel generator rooms)**
- **A CARDOX pressure switch plunger (push to reset) on the halon actuator panels in each diesel room.**

2.12.3 Turbine Driven Auxiliary Feedwater Pump Halon Fire Suppression System

There is one Auxiliary Feedwater Pump Turbine Halon 1301 Fire Suppression system per unit. It has one main and one reserve halon cylinder located in the Turb Bldg basement on the north wall between col. 1L34 and 1M34 for unit #1 and 2L34 and 2M34 for unit #2. The operation of the system is basically the same as that of the Diesel Generator. The exception is that there are no room selector valves because each system is dedicated to one area. **Each Auxiliary Feedwater Pump Turbine Halon Fire Suppression system is equipped with the following controls and indication:**

- **A CARDOX pressure switch plunger (push to reset)**
- **A manual actuation lever and pull key for both the main and reserve cylinders**
- **A discharge station main ON/OFF switch**
- **A discharge station reserve ON/OFF switch**
- **A system ABORT ON/OFF switch**
- **A "CA Halon Bank Select Switch"**

Objective #24

The <u>CARDOX pressure switch plunger</u> (push to reset), located on the discharge manifold near the Halon cylinders, is used to generate a signal. This signal is used to close fire dampers on ventilation duct work entering the Auxiliary Feedwater Pump Turbine Room. It also energizes alarm bells inside and outside the Turbine Room to alert the plant that a halon discharge has occurred. An annunciator alarm is also generated from this pressure switch.

- AD-13, D3 Fire Protection System Alert

Objective #25

Each halon cylinder has a <u>pull key and manual actuator lever</u> associated with it to allow manual pneumatic operation (refer to Drawing 7.12). These devices work in conjunction with each other to allow an operator to manually dump halon into the CA Turbine Room. The operator removes the pull key from the halon bottle. The operator then pulls downward on the manual actuation lever allowing halon to escape from the bottle. This escaped halon is used as a pilot pressure to open the bottles main valve to the manifold. This allows halon to be dumped into the room.

Objective #26

MAIN and RESERVE ON/OFF switches are located on the CA Turbine Halon discharge station to allow manual electric operation (refer to Drawing 7.13). The ON/OFF switch is used to activate that cylinder. If the MAIN or RESERVE ON/OFF switch is selected to ON, a signal is sent to the fire dampers in the CA Turbine room to close. A signal is also sent to the solenoid valve mounted on the appropriate MAIN/RESERVE cylinder. When energized this solenoid valve allows halon from the bottle to be admitted to the manifold and into the turbine room. Once halon enters the header the CARDOX pressure switch is energized to give an alarm and closes the room fire dampers.

A system **ABORT ON/OFF switch is also located on halon control panel in the CA Pump ROOM. To block a halon discharge the OFF pushbutton must be depressed**. Switch position is normally placed in the ON position. An agastat time delay "ON" relay is used to detect fires in the CA Turbine Room. The 30 second time delay gives the operator enough time to abort the actuation if its needed. The agastat is set to close at a temperature of 190°F. Once closed it will energize the MAIN/RESERVE cylinder solenoid valve selected by the "CA Halon Bank Select Switch". It will also energize the alarm bells in the area to warn operators of a fire. A computer alarm is also generated to alert the control room of a CA Turbine room fire. If the MAIN cylinder was selected and the fire is insufficiently extinguished, the operator must then select RESERVE on the "CA Halon Bank Select Switch". This enables the reserve bottle to be dumped into the CA Turbine room.

2.12.4 Admin Computer Room Halon System

There is one Admin Computer Room Halon 1301 fire suppression system. The system incorporates two main and two reserve cylinders. The main cylinders are automatically released whenever one of the thermal detectors are activated. Reserve cylinders are activated manually by selecting reserve on the control panel. Operation of this system is totally automatic.

3.0 SYSTEM OPERATION

3.1 Normal Operation

Objective #27

3.1.1 Limits and Precautions

The following are the limits and precautions listed in the Fire Protection Procedure OP/1/A/6400/02A:

1. The Duplex Strainers on the suction of the Jockey Pumps must be shifted periodically and cleaned when the D/P is greater than 3.0 PSID.

   Basis: Provides the normal swap differential pressure for the strainer. This ensures the structural integrity of the strainer and ensure the strainer D/P will not interfere with the proper suction pressure to the jockey pumps.

	OBJECTIVE	NLO	NLOR	LPRO	LPSO	LOR
8	Discuss the function of the following components on the Fire Pump Room thermostat panels: • Temperature setting control knob • Hi/Lo speed indication • AUTO/OFF Switch • Room heaters	X	X	X	X	
9	Discuss the following supply headers tapping off the Main Fire Pump discharge header: • Low Level Intake Pump bearing • Condenser Circulating Water Pump bearing • CCW Intake Screen Backwash	X	X	X	X	
10	Describe the operational differences between a mulsifyre system and a sprinkler system.	X	X	X	X	
11	Describe the major areas that are protected by the following fire protection systems: • Mulsifyre System • Sprinkler system	X	X	X	X	
12	Explain the basic principle of mulsifyre operation including how holding pressure is relieved.	X	X	X	X	
13	Discuss the three basic devices used to trip a mulsifyre.	X	X	X	X	
14	Discuss how alarms are generated on the Fire Protection System annunciator alarm panels (AD-1,2,3,4 and 5).	X	X	X	X	
15	Discuss operator response to alarms on the Fire Protection System Annunciator Alarm Panels including how to acknowledge and silence alarms.	X	X	X	X	