CHAPTER 11

RADIOACTIVE WASTE MANAGEMENT SYSTEM

TABLE OF CONTENTS

Section	Title	Page
11.0	RADIOACTIVE WASTE MANAGEMENT SYSTEM	11.1-1
11.1	SOURCE TERMS	11.1-1
11.2	LIQUID WASTE MANAGEMENT SYSTEM	11.2-1
11.2.1.5	Site-Specific Cost-Benefit Analysis	11.2-1
11.2.1.6	Mobile or Temporary Equipment	11.2-1
11.2.2	System Description	11.2-1
11.2.3.1	Radioactive Effluent Releases and Dose Calculation in Normal Operation	11.2-2
11.2.3.2	Radioactive Effluent Releases Due to Liquid Containing Tank Failures	11.2-4
11.2.4	Combined License Information	11.2-4
11.2.5	References	11.2-4
11.3	GASEOUS WASTE MANAGEMENT SYSTEM	11.3-1
11.3.1.5	Site-Specific Cost-Benefit Analysis	11.3-1
11.3.2	System Description	11.3-1
11.3.3.1	Radioactive Effluent Releases and Dose Calculation in Normal Operation	11.3-1
11.3.3.3	Offsite Dose Calculation Manual	11.3-2
11.3.7	Combined License Information	11.3-3
11.3.8	References	11.3-3
11.4	SOLID WASTE MANAGEMENT SYSTEM	11.4-1
11.4.1.3	Other Design Considerations	11.4-1
11.4.1.5	Site-Specific Cost-Benefit Analysis	11.4-1
11.4.1.6	Mobile or Temporary Equipment	11.4-1
11.4.2.1.1	Dry Active Wastes	11.4-2
11.4.2.2.1	Spent Resin Handling and De-watering Subsystem	11.4-2
11.4.2.3	Packaging, Storage, and Shipping	11.4-2
11.4.3.2	Process Control Program	11.4-3
11.4.4.5	Mobile De-watering System	11.4-4
11.4.8	Combined License Information	11.4-4

CHAPTER 11

RADIOACTIVE WASTE MANAGEMENT SYSTEM

TABLE OF CONTENTS

Section	Title	Page
11.5	PROCESS EFFLUENT RADIATION MONITORING AND SAMPLING SYSTEMS	11.5-1
11.5.2.6	Reliability and Quality Assurance	11.5-1
11.5.2.7	Determination of Instrumentation Alarm Setpoints for Effluents	11.5-1
11.5.2.8	Compliance with Effluent Release Requirements	11.5-1
11.5.2.9	Offsite Dose Calculation Manual	11.5-2
11.5.2.10	Radiological Environmental Monitoring Program	11.5-2
11.5.2.11	Site-Specific Cost-Benefit Analysis	11.5-2
11.5.5	Combined License Information	11.5-3
11.5.6	References	11.5-3

LIST OF TABLES

Number	Title
11.2-10R	Liquid Releases Calculated by PWR GALE Code
11.2-11R	Liquid Releases with Maximum Defined Fuel Defects
11.2-12R	Comparison of Annual Average Liquid Release Concentrations with10 CFR 20 (Expected Releases)
11.2-13R	Comparison of Annual Average Liquid Release Concentrations with10 CFR 20 (Maximum Releases)
11.2-14R	Input Parameters for the LADTAP II Code
11.2-15R	Individual Doses from Liquid Effluents
11.3-8R	Input Parameters for the GASPAR II Code
11.3-9R	Calculated Doses from Gaseous Effluents
11.3-201	Population Distribution within 50 mi for Population Dose Calculation
11.3-202	Release Rates from the Evaporation Pond to Atmosphere
11.3-203	Input Parameters for Dose Calculation from Evaporation Pond
11.3-204	Calculated Doses from Evaporation Pond
11.3-205	Total Doses Due to Gaseous Effluent from Vent Stack and Evaporation Pond

LIST OF FIGURES

Number	Title
11.2-201	Liquid Waste Management System Piping and Instrumentation Diagram
11.3-201	Gaseous Waste Management System Piping and Instrumentation Diagram
11.4-201	Solid Waste Management System Piping and Instrumentation Diagram

A/B	auxiliary building
AC/B	access building
ACC	accumulator
AOO	anticipated operational occurrence
CFR	Code of Federal Regulations
COL	Combined License
CPNPP	Comanche Peak Nuclear Power Plant
CVCS	chemical and volume control system
CVDT	containment vessel reactor coolant drain tank
DCD	Design Control Document
DOT	Department of Transportation
EAB	exclusion area boundary
ESW	essential service water
FSAR	final safety analysis report
GWMS	gaseous waste management system
HT	holdup tank
HVAC	heating, ventilation, and air conditioning
Hx	heat exchanger
LWMS	liquid waste management system
NEI	Nuclear Energy Institute
ODCM	offsite dose calculation manual
PCP	process control program
PERMS	process effluent radiation monitoring and sampling system
P&ID	piping and instrumentation diagram
PMW	primary makeup water
PWR	pressurized-water reactor
R/B	reactor building
RCP	reactor coolant pump
RCS	reactor coolant system
RG	regulatory guide
RWSAT	refueling water storage auxiliary tank
SG	steam generator
SRST	spent resin storage tank
SSC	structure, system, and component
SWMS	solid waste management system
VCT	volume control tank
WHT	waste holdup tank
WMT	waste monitor tank

11.0 RADIOACTIVE WASTE MANAGEMENT SYSTEM

11.1 SOURCE TERMS

This section of the referenced Design Control Document (DCD) is incorporated by reference with no departures or supplements.

11.2 LIQUID WASTE MANAGEMENT SYSTEM

This section of the referenced DCD is incorporated by reference with the following departures and/or supplements.

11.2.1.5 Site-Specific Cost-Benefit Analysis

CP COL 11.2(5) Replace the third paragraph in DCD Subsection 11.2.1.5 with the following.

A site-specific cost benefit analysis using the guidance of regulatory guide (RG) 1.110 was performed based on the site-specific calculated radiation doses as a result of radioactive liquid effluents during normal operations, including anticipated operational occurrences (AOOs). The result of the dose analysis indicated a public exposure of less than 1 person-rem per year resulting from the discharge of radioactive effluents, effecting a dose cost of less than $1000 per year, in 1975 dollars. Based on a population dose results of 2.14 person-rem per year (Total Body), 2.04 person-rem per year (Thyroid) and the equipment and operating costs as presented in RG 1.110, the cost benefit analysis demonstrates that addition of processing equipment of reasonable treatment technology is not favorable or cost beneficial, and that the design provided herein complies with Title 10, Code of Federal Regulations (CFR), Part 50, Appendix I.

11.2.1.6 Mobile or Temporary Equipment

CP COL 11.2(1) Add the following text at the end of the paragraph in DCD Subsection 11.2.1.6.

Process piping connections are designed to have connectors different from the utility connectors to prevent cross-connection and contamination.

11.2.2 System Description

CP COL 11.2(2) Replace third paragraph in DCD Subsection 11.2.2 with the following.
CP COL 11.2(6)

Process flow diagrams with process equipment, flow data, tank batch capabilities, and key control instrumentation are provided to indicate process design, method of operation, and release monitoring for the site specific liquid waste management system (LWMS).

Figure 11.2-201, Sheets 1 through 9 illustrate the piping and process equipment, instrumentation and controls for Comanche Peak Nuclear Power Plant (CPNPP) Units 3 and 4 LWMS.

The treated liquid effluent is discharged to Squaw Creek Reservoir via CPNPP Units 1 and 2 circulating water return line with provision to divert a portion of the flow to an evaporation pond. The shape of the flow orifices and other technical details will be developed in the detail design phase. Subsection 11.2.3.1 discusses the design of the evaporation pond and return line connections.

11.2.3.1 Radioactive Effluent Releases and Dose Calculation in Normal Operation

---

CP COL 11.2(4) Replace the second and third sentences of the second paragraph in DCD Subsection 11.2.3.1 with the following.

The parameters used by the PWR-GALE Code are provided in Table 11.2-9, and the calculated effluents are provided in Table 11.2-10R. The calculated effluents for the maximum releases are provided in Table 11.2-11R. On this site-specific application, handling of contaminated laundry is contracted to off-site services. Therefore, the detergent waste effluent need not be considered.

CP COL 11.2(2) Replace the last four paragraphs in DCD Subsection 11.2.3.1 with the following.

CP COL 11.2(4)

The calculated effluent concentrations using annual release rates are then compared against the concentration limits of 10 CFR 20 Appendix B (see Tables 11.2-12R and 11.2-13R.).

Once it is confirmed that the treated effluent meets discharge requirements, the effluent is released into Squaw Creek Reservoir via the CPNPP Units 1 and 2 circulating water return line. The liquid effluent is maintained at ambient temperature, as it is stored inside the auxiliary building (A/B) waste monitoring tanks. Currently, Squaw Creek Reservoir has a tritium concentration limit of 30,000 pCi/L (Reference 11.2-201). Based on an analysis, the tritium concentration in Squaw Creek Reservoir, the tritium concentration in Squaw Creek Reservoir is anticipated to be within the tritium limit due to the local rainfall, evaporation, and spillover (control release) from Squaw Creek Reservoir to Squaw Creek. However, during the maximum tritium generation condition (i.e., all four units operating at full power), the tritium concentration could be exceeded. A portion of the liquid effluent from CPNPP Units 3 and 4 discharge header can be diverted to an evaporation pond located within the site boundary. Under this maximum tritium generation condition, and maintaining a 20 percent margin below the offsite dose calculation manual (ODCM) limit, up to half of liquid effluent is diverted into the evaporation pond. In the event that both CPNPP Units

1 and 2 are temporarily not in operation, or when there is no dilution flow, the waste holdup tanks (WHTs) and waste monitor tanks (WMTs) have enough capacity to store more than a month of the daily waste input. The evaporation pond can also receive 100 percent of the liquid effluent on a temporary basis. It is noted that before CPNPP Units 1 and 2 retire, an evaluation is needed to address the requirement of the circulating water as dilution water to CPNPP Units 3 and 4 effluents.

CPNPP Units 3 and 4 discharge header and the evaporation pond discharge lines are connected to the circulating water return line for CPNPP Units 1 and 2 in two locations before the circulating water is discharged into Squaw Creek Reservoir. The locations of the connections provide sufficient distance for thorough mixing before the liquid is released into Squaw Creek Reservoir. The exact locations of the connections into the circulating water discharge header is determined in the detail design phase with consideration of the impact of sharing structure, system, and components (SSCs) among the nuclear units.

The evaporation pond is designed to provide sufficient surface area for natural evaporation based on the local area rainfall and evaporation rate and half of liquid effluent. The evaporation pond is sized to prevent overflow due to local maximum rainfall condition. The pond design includes a discharge line and transfer pump. A discharge line connects into CPNPP Units 1 and 2 circulating water return line to keep the pond from overflowing during periods of extreme weather conditions. Doses from airborne particulates from the evaporation pond are described in Subsection 11.3.3.

Isotopic concentrations are calculated, assuming 247,500 gpm per unit of circulating water from CPNPP Units 1 and 2 (Reference 11.2-201, ODCM for CPNPP Units 1 and 2). The isotopic ratios between the expected releases and the concentration limits of 10 CFR 20 Appendix B are listed in Table 11.2-12R. The isotopic ratios between the maximum releases and the concentration limits of 10 CFR 20 Appendix B are listed in Table 11.2-13R. These ratio values are less than the allowable value of 1.0.

The individual doses and population doses are evaluated with the LADTAP II Code (Reference 11.2-14). The site-specific parameters used in the LADTAP II Code are listed in Table 11.2-14R, and the calculated individual doses are listed in Table 11.2-15R. And the calculated population dose from liquid effluents is 2.14 person-rem for whole-body and 2.04 persom-rem for thyroid. Based on these parameters, the maximum individual dose to total body is 0.90 mrem/yr (adult) and the maximum individual dose to organ is 1.28 mrem/yr (teenager's liver). These values are less than the 10 CFR 50 Appendix I criteria of 3 mrem/yr and 10 mrem/yr, respectively. According to NUREG-0543 (Reference 11.2-202), there is reasonable assurance that sites with up to four operating reactors that have releases within Appendix I design objective values are also in conformance with the EPA Uranium Fuel Cycle Standard, 40 CFR 190. Once the proposed CPNPP Units 3 and 4 are constructed, the Comanche Peak site will consist of four operating reactors.

11.2.3.2 Radioactive Effluent Releases Due to Liquid Containing Tank Failures

CP COL 11.2(3) Replace the last paragraph in DCD Subsection 11.2.3.2 with the following.

Site-specific hydrogeological data indicate that contaminant migration time is about two years (see Subsection 2.4.12), exceeding the travel time used in the above analysis. Additionally, the tank cubicles are equipped with drainpipes to a local sump that is designed to detect leakage and/or overflow, and initiate an alarm for operator action. Hence, the potential for groundwater contamination is greatly reduced and further analysis is not warranted.

11.2.4 Combined License Information

Replace the content of DCD Subsection 11.2.4 with the following.

CP COL 11.2(1) ***11.2(1)*** *The mobile and temporary liquid radwaste processing equipment*

This combined license (COL) item is addressed in Subsection 11.2.1.6.

CP COL 11.2(2) ***11.2(2)*** *Site-specific information of the LWMS*

This COL item is addressed in Subsections 11.2.2 and 11.2.3.1.

CP COL 11.2(3) ***11.2(3)*** *The liquid containing tank failure*

This COL item is addressed in Subsection 11.2.3.2.

CP COL 11.2(4) ***11.2(4)*** *The site-specific dose calculation*

This COL item is addressed in Subsection 11.2.3.1, Table 11.2-10R, Table 11.2-11R, Table 11.2-12R, Table 11.2-13R, Table 11.2-14R and Table 11.2-15R.

CP COL 11.2(5) ***11.2(5)*** *Site-specific cost benefit analysis*

This COL item is addressed in Subsection 11.2.1.5.

CP COL 11.2(6) ***11.2(6)*** *Piping and instrumentation diagrams*

This COL item is addressed in Subsection 11.2.2 and Figure 11.2-201.

11.2.5 References

Add the following references after the last reference in DCD subsection 11.2.5.

11.2-201 *Offsite Dose Calculation Manual for CPNPP Units 1 & 2*, Revision 26.

11.2-202 U.S. Nuclear Regulatory Commission, *Methods for Demonstrating LWR Compliance With the EPA Uranium Fuel Cycle Standard (40 CFR 190),* NUREG-0543, Washington, DC, 1980.

CP COL 11.2(4)

Table 11.2-10R (Sheet 1 of 2)
Liquid Releases Calculated by PWR GALE Code (Ci/yr)

Isotope	Shim Bleed	Misc. Wastes	Turbine Building	Combined Releases	Detergent Waste(3)	TOTAL Releases (1)
Corrosion and Activation Products						
Na-24	0.00000	0.00029	0.00002	0.00031	N/A	4.70E-03
P-32	0.00000	0.00000	0.00000	0.00000	N/A	0.00E+00
Cr-51	0.00000	0.00008	0.00000	0.00008	N/A	1.30E-03
Mn-54	0.00000	0.00004	0.00000	0.00005	N/A	7.00E-04
Fe-55	0.00000	0.00003	0.00000	0.00003	N/A	5.00E-04
Fe-59	0.00000	0.00001	0.00000	0.00001	N/A	1.00E-04
Co-58	0.00000	0.00012	0.00000	0.00013	N/A	1.90E-03
Co-60	0.00000	0.00001	0.00000	0.00002	N/A	0.00E+00
Ni-63	0.00000	0.00000	0.00000	0.00000	N/A	0.00E+00
Zn-65	0.00000	0.00001	0.00000	0.00001	N/A	2.20E-04
W-187	0.00000	0.00002	0.00000	0.00002	N/A	3.50E-04
Np-239	0.00000	0.00003	0.00000	0.00004	N/A	5.30E-04
Fission Products						
Rb-88	0.00000	0.00187	0.00000	0.00187	N/A	2.80E-02
Sr-89	0.00000	0.00000	0.00000	0.00000	N/A	6.00E-05
Sr-90	0.00000	0.00000	0.00000	0.00000	N/A	8.00E-06
Sr-91	0.00000	0.00000	0.00000	0.00000	N/A	6.80E-05
Y-91m	0.00000	0.00000	0.00000	0.00000	N/A	4.40E-05
Y-91	0.00000	0.00000	0.00000	0.00000	N/A	1.00E-05
Y-93	0.00000	0.00002	0.00000	0.00002	N/A	2.90E-04
Zr-95	0.00000	0.00001	0.00000	0.00001	N/A	2.00E-04
Nb-95	0.00000	0.00001	0.00000	0.00001	N/A	1.00E-04
Mo-99	0.00000	0.00011	0.00000	0.00011	N/A	1.64E-03
Tc-99m	0.00000	0.00011	0.00000	0.00011	N/A	1.70E-03
Ru-103	0.00001	0.00020	0.00000	0.00021	N/A	3.11E-03
Rh-103m	0.00001	0.00020	0.00000	0.00021	N/A	3.10E-03
Ru-106	0.00010	0.00243	0.00005	0.00257	N/A	3.81E-02
Rh-106	0.00010	0.00243	0.00005	0.00257	N/A	3.90E-05
Ag-110m	0.00000	0.00003	0.00000	0.00004	N/A	6.00E-04
Ag-110	0.00000	0.00000	0.00000	0.00000	N/A	7.20E-05
Sb-124	0.00000	0.00000	0.00000	0.00000	N/A	0.00E+00
Te-129m	0.00000	0.00000	0.00000	0.00001	N/A	7.80E-05
Te-129	0.00000	0.00002	0.00000	0.00002	N/A	3.10E-04
Te-131m	0.00000	0.00002	0.00000	0.00002	N/A	2.50E-04
Te-131	0.00000	0.00000	0.00000	0.00001	N/A	7.60E-05
I-131	0.00002	0.00001	0.00000	0.00002	N/A	4.00E-04
Te-132	0.00000	0.00003	0.00000	0.00003	N/A	4.70E-04
I-132	0.00000	0.00001	0.00001	0.00002	N/A	3.10E-04
I-133	0.00001	0.00002	0.00003	0.00005	N/A	8.10E-04
I-134	0.00000	0.00001	0.00000	0.00001	N/A	8.90E-05
Cs-134	0.00002	0.00005	0.00000	0.00007	N/A	1.00E-03
I-135	0.00000	0.00002	0.00003	0.00005	N/A	7.80E-04
Cs-136	0.00030	0.00112	0.00000	0.00141	N/A	2.16E-02
Cs-137	0.00003	0.00008	0.00000	0.00011	N/A	2.00E-03

Notes:
1. The release totals include an adjustment of 0.16 Ci/yr added by the PWR-GALE Code to account for AOOs.
2. An entry of 0.00000 indicates that the value is less than 1.0E-5 Ci/yr.
3. For this site-specific application, contaminated laundry is contracted for off-site services.

CP COL 11.2(4)

Table 11.2-10R (Sheet 2 of 2)
Liquid Releases Calculated by PWR GALE Code (Ci/yr)

Isotope	Shim Bleed	Misc. Wastes	Turbine Building	Combined Releases	Detergent Waste(3)	TOTAL Releases (1)
Fission Products						
Ba-137m	0.00003	0.00000	0.00000	0.00003	N/A	4.60E-04
Ba-140	0.00001	0.00031	0.00001	0.00033	N/A	4.89E-03
La-140	0.00001	0.00051	0.00001	0.00053	N/A	8.00E-03
Ce-141	0.00000	0.00000	0.00000	0.00000	N/A	6.00E-05
Ce-143	0.00000	0.00003	0.00000	0.00003	N/A	5.00E-04
Pr-143	0.00000	0.00001	0.00000	0.00001	N/A	7.90E-05
Ce-144	0.00000	0.00011	0.00000	0.00011	N/A	1.70E-03
Pr-144	0.00000	0.00011	0.00000	0.00011	N/A	1.70E-03
All others	0.00000	0.00000	0.00000	0.00000	N/A	1.20E-05
TOTAL (except H-3)	**0.00065**	**0.01053**	**0.00025**	**0.01143**	N/A	**1.70E-01**
H-3 release						1.60E+03

Notes:
1. The release totals include an adjustment of 0.16 Ci/yr added by the PWR-GALE Code to account for AOOs.
2. An entry of 0.00000 indicates that the value is less than 1.0E-5 Ci/yr.
3. For this site-specific application, contaminated laundry is contracted for off-site services.

CP COL 11.2(4)

Table 11.2-11R (Sheet 1 of 2)
Liquid Releases with Maximum Defined Fuel Defects (Ci/yr)

Isotope	Shim Bleed	Misc. Wastes	Turbine Building	Combined Releases	Detergent Waste(3)	TOTAL Releases (1)
Corrosion and Activation Products						
Na-24	0.00000	0.00029	0.00002	0.00031	N/A	3.20E-04
P-32	0.00000	0.00000	0.00000	0.00000	N/A	0.00E+00
Cr-51	0.00000	0.00008	0.00000	0.00008	N/A	8.25E-05
Mn-54	0.00000	0.00004	0.00000	0.00004	N/A	4.13E-05
Fe-55	0.00000	0.00003	0.00000	0.00003	N/A	3.10E-05
Fe-59	0.00000	0.00001	0.00000	0.00001	N/A	1.03E-05
Co-58	0.00000	0.00012	0.00000	0.00012	N/A	1.24E-04
Co-60	0.00000	0.00001	0.00000	0.00001	N/A	1.03E-05
Ni-63	0.00000	0.00000	0.00000	0.00000	N/A	0.00E+00
Zn-65	0.00000	0.00001	0.00000	0.00001	N/A	1.03E-05
W-187	0.00000	0.00002	0.00000	0.00002	N/A	2.06E-05
Np-239	0.00000	0.00003	0.00000	0.00003	N/A	3.10E-05
Fission Products						
Rb-88	0.00000	0.03849	0.00000	0.03849	N/A	3.97E-02
Sr-89	0.00000	0.00000	0.00000	0.00000	N/A	0.00E+00
Sr-90	0.00000	0.00000	0.00000	0.00000	N/A	0.00E+00
Sr-91	0.00000	0.00000	0.00000	0.00000	N/A	0.00E+00
Y-91m	0.00000	0.00000	0.00000	0.00000	N/A	0.00E+00
Y-91	0.00000	0.00000	0.00000	0.00000	N/A	0.00E+00
Y-93	0.00000	0.00000	0.00000	0.00000	N/A	0.00E+00
Zr-95	0.00000	0.00001	0.00000	0.00001	N/A	1.03E-05
Nb-95	0.00000	0.00002	0.00000	0.00002	N/A	2.06E-05
Mo-99	0.00000	0.01333	0.00000	0.01333	N/A	1.38E-02
Tc-99m	0.00000	0.00527	0.00000	0.00527	N/A	5.44E-03
Ru-103	0.00000	0.00001	0.00000	0.00001	N/A	1.03E-05
Rh-103m	0.00000	0.00001	0.00000	0.00001	N/A	1.03E-05
Ru-106	0.00000	0.00001	0.00000	0.00001	N/A	1.03E-05
Rh-106	0.00000	0.00001	0.00000	0.00001	N/A	1.03E-05
Ag-110m	0.00000	0.00000	0.00000	0.00000	N/A	0.00E+00
Ag-110	0.00000	0.00000	0.00000	0.00000	N/A	0.00E+00
Sb-124	0.00000	0.00000	0.00000	0.00000	N/A	0.00E+00
Te-129m	0.00000	0.00000	0.00000	0.00000	N/A	0.00E+00
Te-129	0.00000	0.00000	0.00000	0.00000	N/A	0.00E+00
Te-131m	0.00000	0.00033	0.00000	0.00033	N/A	3.40E-04
Te-131	0.00000	0.00000	0.00000	0.00000	N/A	0.00E+00
I-131	0.00113	0.00056	0.00000	0.00169	N/A	1.74E-03
Te-132	0.00000	0.00526	0.00000	0.00526	N/A	5.43E-03
I-132	0.00000	0.00015	0.00015	0.00030	N/A	3.10E-04
I-133	0.00163	0.00327	0.00491	0.00981	N/A	1.01E-02
I-134	0.00000	0.00005	0.00000	0.00005	N/A	5.16E-05
Cs-134	0.73457	1.83643	0.00000	2.57100	N/A	2.65E+00
I-135	0.00000	0.00083	0.00125	0.00208	N/A	2.15E-03
Cs-136	0.12019	0.44873	0.00000	0.56892	N/A	5.87E-01
Cs-137	0.43698	1.16528	0.00000	1.60226	N/A	1.65E+00

Notes:
1. The release totals include an adjustment of 0.16 Ci/yr added by the PWR-GALE Code to account for AOOs.
2. An entry of 0.00000 indicates that the value is less than 1.0E-5 Ci/yr.
3. For this site-specific application, contaminated laundry is contracted for off-site services.

CP COL 11.2(4)

Table 11.2-11R (Sheet 2 of 2)
Liquid Releases with Maximum Defined Fuel Defects (Ci/yr)

Isotope	Shim Bleed	Misc. Wastes	Turbine Building	Combined Releases	Detergent Waste(3)	TOTAL Releases (1)
Fission Products						
Ba-137m	0.20917	0.00000	0.00000	0.20917	N/A	2.16E-01
Ba-140	0.00000	0.00010	0.00000	0.00010	N/A	1.03E-04
La-140	0.00000	0.00002	0.00000	0.00002	N/A	2.06E-05
Ce-141	0.00000	0.00000	0.00000	0.00000	N/A	0.00E+00
Ce-143	0.00000	0.00000	0.00000	0.00000	N/A	0.00E+00
Pr-143	0.00000	0.00000	0.00000	0.00000	N/A	0.00E+00
Ce-144	0.00000	0.00001	0.00000	0.00001	N/A	1.03E-05
Pr-144	0.00000	0.00001	0.00000	0.00001	N/A	1.03E-05
TOTAL (except H-3)	**1.50367**	**3.51883**	**0.00633**	**5.02883**	N/A	**5.19E+00**
H-3 release						1.60E+03

Notes:
1. The release totals include an adjustment of 0.16 Ci/yr added by the PWR-GALE Code to account for AOOs.
2. An entry of 0.00000 indicates that the value is less than 1.0E-5 Ci/yr.
3. For this site-specific application, contaminated laundry is contracted for off-site services.

CP COL 11.2(4)

Table 11.2-12R (Sheet 1 of 2)
Comparison of Annual Average Liquid Release Concentrations with 10 CFR 20 (Expected Releases)

Isotope (1)	Discharge Concentration (µCi/ml) (2)	Effluent Concentration Limit (µCi/ml) (3)	Fraction of Concentration Limit
Na-24	1.19E-11	5.00E-05	2.39E-07
P-32	0.00E+00	9.00E-06	0.00E+00
Cr-51	3.30E-12	5.00E-04	6.60E-09
Mn-54	1.78E-12	3.00E-05	5.92E-08
Fe-55	1.27E-12	1.00E-04	1.27E-08
Fe-59	2.54E-13	1.00E-05	2.54E-08
Co-58	4.82E-12	2.00E-05	2.41E-07
Co-60	0.00E+00	3.00E-06	0.00E+00
Ni-63	0.00E+00	1.00E-04	0.00E+00
Zn-65	5.58E-13	5.00E-06	1.12E-07
W-187	8.88E-13	3.00E-05	2.96E-08
Np-239	1.35E-12	2.00E-05	6.73E-08
Rb-88	7.11E-11	4.00E-04	1.78E-07
Sr-89	1.52E-13	8.00E-06	1.90E-08
Sr-90	2.03E-14	5.00E-07	4.06E-08
Sr-91	1.73E-13	2.00E-05	8.63E-09
Y-91m	1.12E-13	2.00E-03	5.58E-11
Y-91	2.54E-14	8.00E-06	3.17E-09
Y-93	7.36E-13	2.00E-05	3.68E-08
Zr-95	5.08E-13	2.00E-05	2.54E-08
Nb-95	2.54E-13	3.00E-05	8.46E-09
Mo-99	4.16E-12	2.00E-05	2.08E-07
Tc-99m	4.32E-12	1.00E-03	4.32E-09
Ru-103	7.89E-12	3.00E-05	2.63E-07
Rh-103m	7.87E-12	6.00E-03	1.31E-09
Ru-106	9.67E-11	3.00E-06	3.22E-05
Ag-110m	1.52E-12	6.00E-06	2.54E-07
Sb-124	0.00E+00	7.00E-06	0.00E+00
Te-129m	1.98E-13	7.00E-06	2.83E-08
Te-129	7.87E-13	4.00E-04	1.97E-09
Te-131m	6.35E-13	8.00E-06	7.93E-08
Te-131	1.93E-13	8.00E-05	2.41E-09
I-131	1.02E-12	1.00E-06	1.02E-06
Te-132	1.19E-12	9.00E-06	1.33E-07
I-132	7.87E-13	1.00E-04	7.87E-09
I-133	2.06E-12	7.00E-06	2.94E-07

Notes:
1. Rh-106, Ag-110, Ba-137m are not included in Table 2 of 10 CFR 20 Appendix B. Therefore, these nuclides are excluded from the calculation of the discharge concentration.
2. Annual average discharge concentration based on release of average daily discharge for 292 days per year with 247,500 gpm dilution flow.
3. 10 CFR 20 Appendix B, Table 2

CP COL 11.2(4)

Table 11.2-12R (Sheet 2 of 2)
Comparison of Annual Average Liquid Release Concentrations with 10 CFR 20 (Expected Releases)

Isotope (1)	Discharge Concentration (µCi/ml) (2)	Effluent Concentration Limit (µCi/ml) (3)	Fraction of Concentration Limit
I-134	2.26E-13	4.00E-04	5.65E-10
Cs-134	2.54E-12	9.00E-07	2.82E-06
I-135	1.98E-12	3.00E-05	6.60E-08
Cs-136	5.49E-11	6.00E-06	9.15E-06
Cs-137	5.08E-12	1.00E-06	5.08E-06
Ba-140	1.24E-11	8.00E-06	1.55E-06
La-140	2.03E-11	9.00E-06	2.26E-06
Ce-141	1.52E-13	3.00E-05	5.08E-09
Ce-143	1.27E-12	2.00E-05	6.35E-08
Pr-143	2.01E-13	2.00E-05	1.00E-08
Ce-144	4.32E-12	3.00E-06	1.44E-06
Pr-144	4.32E-12	6.00E-04	7.19E-09
H-3	4.06E-06	1.00E-03	4.06E-03
TOTAL			4.12E-03

Notes:

1. Rh-106, Ag-110, Ba-137m are not included in Table 2 of 10 CFR 20 Appendix B. Therefore, these nuclides are excluded from the calculation of the discharge concentration.
2. Annual average discharge concentration based on release of average daily discharge for 292 days per year with 247,500 gpm dilution flow.
3. 10 CFR 20 Appendix B, Table 2

CP COL 11.2(4)

Table 11.2-13R (Sheet 1 of 2)
Comparison of Annual Average Liquid Release Concentrations with 10 CFR 20 (Maximum Releases)

Isotope (1)	Discharge Concentration (µCi/ml) (2)	Effluent Concentration Limit (µCi/ml) (3)	Fraction of Concentration Limit
Na-24	8.12E-13	5.00E-05	1.62E-08
P-32	0.00E+00	9.00E-06	0.00E+00
Cr-51	2.10E-13	5.00E-04	4.19E-10
Mn-54	1.05E-13	3.00E-05	3.49E-09
Fe-55	7.86E-14	1.00E-04	7.86E-10
Fe-59	2.62E-14	1.00E-05	2.62E-09
Co-58	3.14E-13	2.00E-05	1.57E-08
Co-60	2.62E-14	3.00E-06	8.73E-09
Ni-63	0.00E+00	1.00E-04	0.00E+00
Zn-65	2.62E-14	5.00E-06	5.24E-09
W-187	5.24E-14	3.00E-05	1.75E-09
Np-239	7.86E-14	2.00E-05	3.93E-09
Rb-88	1.01E-10	4.00E-04	2.52E-07
Sr-89	0.00E+00	8.00E-06	0.00E+00
Sr-90	0.00E+00	5.00E-07	0.00E+00
Sr-91	0.00E+00	2.00E-05	0.00E+00
Y-91m	0.00E+00	2.00E-03	0.00E+00
Y-91	0.00E+00	8.00E-06	0.00E+00
Y-93	0.00E+00	2.00E-05	0.00E+00
Zr-95	2.62E-14	2.00E-05	1.31E-09
Nb-95	5.24E-14	3.00E-05	1.75E-09
Mo-99	3.49E-11	2.00E-05	1.75E-06
Tc-99m	1.38E-11	1.00E-03	1.38E-08
Ru-103	2.62E-14	3.00E-05	8.73E-10
Rh-103m	2.62E-14	6.00E-03	4.37E-12
Ru-106	2.62E-14	3.00E-06	8.73E-09
Ag-110m	0.00E+00	6.00E-06	0.00E+00
Sb-124	0.00E+00	7.00E-06	0.00E+00
Te-129m	0.00E+00	7.00E-06	0.00E+00
Te-129	0.00E+00	4.00E-04	0.00E+00
Te-131m	8.64E-13	8.00E-06	1.08E-07
Te-131	0.00E+00	8.00E-05	0.00E+00
I-131	4.43E-12	1.00E-06	4.43E-06
Te-132	1.38E-11	9.00E-06	1.53E-06
I-132	7.86E-13	1.00E-04	7.86E-09
I-133	2.57E-11	7.00E-06	3.67E-06
I-134	1.31E-13	4.00E-04	3.27E-10
Cs-134	6.73E-09	9.00E-07	7.48E-03

Notes:

1. Rh-106, Ag-110, Ba-137m are not included in Table 2 of 10 CFR 20 Appendix B. Therefore, these nuclides are excluded from the calculation of the discharge concentration.
2. Annual average discharge concentration based on release of average daily discharge for 292 days per year with 247,500 gpm dilution flow.
3. 10 CFR 20 Appendix B, Table 2

CP COL 11.2(4)

Table 11.2-13R (Sheet 2 of 2)
Comparison of Annual Average Liquid Release Concentrations with 10 CFR 20 (Maximum Releases)

Isotope (1)	Discharge Concentration (µCi/ml) (2)	Effluent Concentration Limit (µCi/ml) (3)	Fraction of Concentration Limit
I-135	5.45E-12	3.00E-05	1.82E-07
Cs-136	1.49E-09	6.00E-06	2.48E-04
Cs-137	4.20E-09	1.00E-06	4.20E-03
Ba-140	2.62E-13	8.00E-06	3.27E-08
La-140	5.24E-14	9.00E-06	5.82E-09
Ce-141	0.00E+00	3.00E-05	0.00E+00
Ce-143	0.00E+00	2.00E-05	0.00E+00
Pr-143	0.00E+00	2.00E-05	0.00E+00
Ce-144	2.62E-14	3.00E-06	8.73E-09
Pr-144	2.62E-14	6.00E-04	4.37E-11
H-3	4.06E-06	1.00E-03	4.06E-03
TOTAL			**1.60E-02**

Notes:
1. Rh-106, Ag-110, Ba-137m are not included in Table 2 of 10 CFR 20 Appendix B. Therefore, these nuclides are excluded from the calculation of the discharge concentration.
2. Annual average discharge concentration based on release of average daily discharge for 292 days per year with 247,500 gpm dilution flow.
3. 10 CFR 20 Appendix B, Table 2

CP COL 11.2(4)

Table 11.2-14R (Sheet 1 of 2)
Input Parameters for the LADTAP II Code

Parameter	Value
Midpoint of Plant Life(yr)	30
Circulating Water System discharge rate (gpm)	247,500
Water type selection	Freshwater
Reconcentration model index	1 (Complete mix)
Discharge rate to receiving water(ft^3/sec)	1.5(1) 45.4(2)
Total impoundment volume(ft^3)	6.3E+09
Shore-width factor	0.2 (Squaw Creek) 0.3(Whitney Reservoir)
Dilution factor -Squaw Creek(3)	1.0
Dilution factor - Brazos River(4)	822.7(1) 27.2(2)
Dilution factor - Whitney Reservoir(5)	1645.4 (1) 54.4 (2)
Transit time – Squaw Creek	7.3
Transit time – Brazos River	66
Transit time – Whitney Reservoir	77
Irrigation rate(Liter/m^2-month)	74.6
Animal considered for milk pathway	Cow
Fraction of animal feed not contaminated	0
Fraction of animal water not contaminated	0
Source terms	Table 11.2-10R
Source term multiplier	1
50 mile population	3,493,553
Total Production within 50 miles(kg/yr,L/yr)	Leafy Vegetable : 25,000 kg/yr Vegetable : 5,270,000 kg/yr Milk : 943,000 L/yr Meat : 281,000 kg/yr
Annual local harvest for sports harvest fishing(kg/yr)	324,375
Annual local harvest for commercial fishing harvest(kg/yr)	None
Annual local harvest for sports invertebrate harvest (kg/yr)	None
Annual local harvest for commercial invertebrate harvest (kg/yr)	None

Note:
1. The conditions for maximum individual dose calculation.
2. The conditions for population dose calculation.
3. The water of Squaw Creek is considered following evaluations.
   - Dose from fish (Maximum individual dose)
   - Dose from shoreline (Maximum individual dose)
4. The water of Brazos River is considered following evaluation.
   - Dose from drinking water in Cleburne (Maximum individual dose and population dose)
   - Dose from irrigation water (Maximum individual dose and population dose)
   - Dose from sports fishing (Population dose)
5. The water of Whitney Reservoir is considered following evaluation.
   - Dose from drinking water in Whitney (Population dose)
   - Dose from shoreline, swimming and boating (Population dose)

CP COL 11.2(4)

Table 11.2-14R (Sheet 2 of 2)
Input Parameters for the LADTAP II Code

Parameter	Value
Population using water-supply system	3722 (City of Whitney) 53,440 (City of Cleburne)
Total shoreline usage time(person-hr/yr)	22,358,746
Total swimming usage time(person-hr/yr)	22,358,746
Total boating usage time(person-hr/yr)	22,358,746
Other parameters	RG 1.109

CP COL 11.2(4)

Table 11.2-15R
Individual Doses from Liquid Effluents

	Annual Doses (mrem/yr)							
PATHWAY	SKIN	BONE	LIVER	T.BODY	THYROID	KIDNEY	LUNG	GI-LLI
Drinking								
Adult	-	2.40E-05	6.39E-03	6.39E-03	6.37E-03	6.38E-03	6.37E-03	6.42E-03
Teenager	-	2.24E-05	4.51E-03	4.50E-03	4.49E-03	4.50E-03	4.49E-03	4.52E-03
Child	-	6.32E-05	8.67E-03	8.63E-03	8.62E-03	8.64E-03	8.62E-03	8.65E-03
Infant	-	6.16E-05	8.52E-03	8.47E-03	8.46E-03	8.48E-03	8.47E-03	8.48E-03
Fish								
Adult	-	7.86E-01	1.25E+00	8.83E-01	1.36E-01	5.15E-01	2.61E-01	1.72E-01
Teenager	-	8.38E-01	1.26E+00	5.22E-01	1.04E-01	4.98E-01	2.56E-01	1.32E-01
Child	-	1.05E+00	1.13E+00	2.49E-01	8.64E-02	4.26E-01	2.08E-01	9.74E-02
Shoreline								
Adult	1.52E-03	1.30E-03	1.30E-03	1.30E-03	1.30E-03	1.30E-03	1.30E-03	1.30E-03
Teenager	8.47E-03	7.25E-03	7.25E-03	7.25E-03	7.25E-03	7.25E-03	7.25E-03	7.25E-03
Child	1.77E-03	1.51E-03	1.51E-03	1.51E-03	1.51E-03	1.51E-03	1.51E-03	1.51E-03
Irrigated Foods：Vegetables								
Adult	-	1.17E-04	4.64E-03	4.60E-03	4.53E-03	4.57E-03	4.54E-03	4.74E-03
Teenager	-	1.89E-04	5.72E-03	5.60E-03	5.53E-03	5.60E-03	5.56E-03	5.80E-03
Child	-	4.38E-04	9.09E-03	8.82E-03	8.77E-03	8.89E-03	8.81E-03	8.99E-03
Irrigated Foods：Leafy Vegetables								
Adult	-	1.44E-05	5.72E-04	5.68E-04	5.58E-04	5.64E-04	5.60E-04	5.85E-04
Teenager	-	1.26E-05	3.82E-04	3.74E-04	3.70E-04	3.74E-04	3.71E-04	3.88E-04
Child	-	2.19E-05	4.55E-04	4.42E-04	4.39E-04	4.45E-04	4.41E-04	4.50E-04
Irrigated Foods：Milk								
Adult	-	6.84E-05	2.80E-03	2.77E-03	2.71E-03	2.74E-03	2.72E-03	2.71E-03
Teenager	-	1.23E-04	3.69E-03	3.58E-03	3.52E-03	3.58E-03	3.54E-03	3.53E-03
Child	-	2.95E-04	5.86E-03	5.62E-03	5.58E-03	5.67E-03	5.61E-03	5.58E-03
Irrigated Foods：Meat								
Adult	-	4.04E-05	9.71E-04	9.71E-04	9.60E-04	1.03E-03	9.61E-04	3.04E-03
Teenager	-	3.39E-05	5.81E-04	5.79E-04	5.72E-04	6.27E-04	5.73E-04	1.87E-03
Child	-	6.34E-05	7.05E-04	7.01E-04	6.93E-04	7.65E-04	6.94E-04	1.48E-03
Total								
Adult	1.52E-03	7.88E-01	1.27E+00	9.00E-01	1.52E-01	5.32E-01	2.77E-01	1.91E-01
Teenager	8.47E-03	8.46E-01	1.28E+00	5.44E-01	1.26E-01	5.20E-01	2.78E-01	1.55E-01
Child	1.77E-03	1.05E+00	1.16E+00	2.75E-01	1.12E-01	4.52E-01	2.34E-01	1.24E-01
Infant	-	6.16E-05	8.52E-03	8.47E-03	8.46E-03	8.48E-03	8.47E-03	8.48E-03

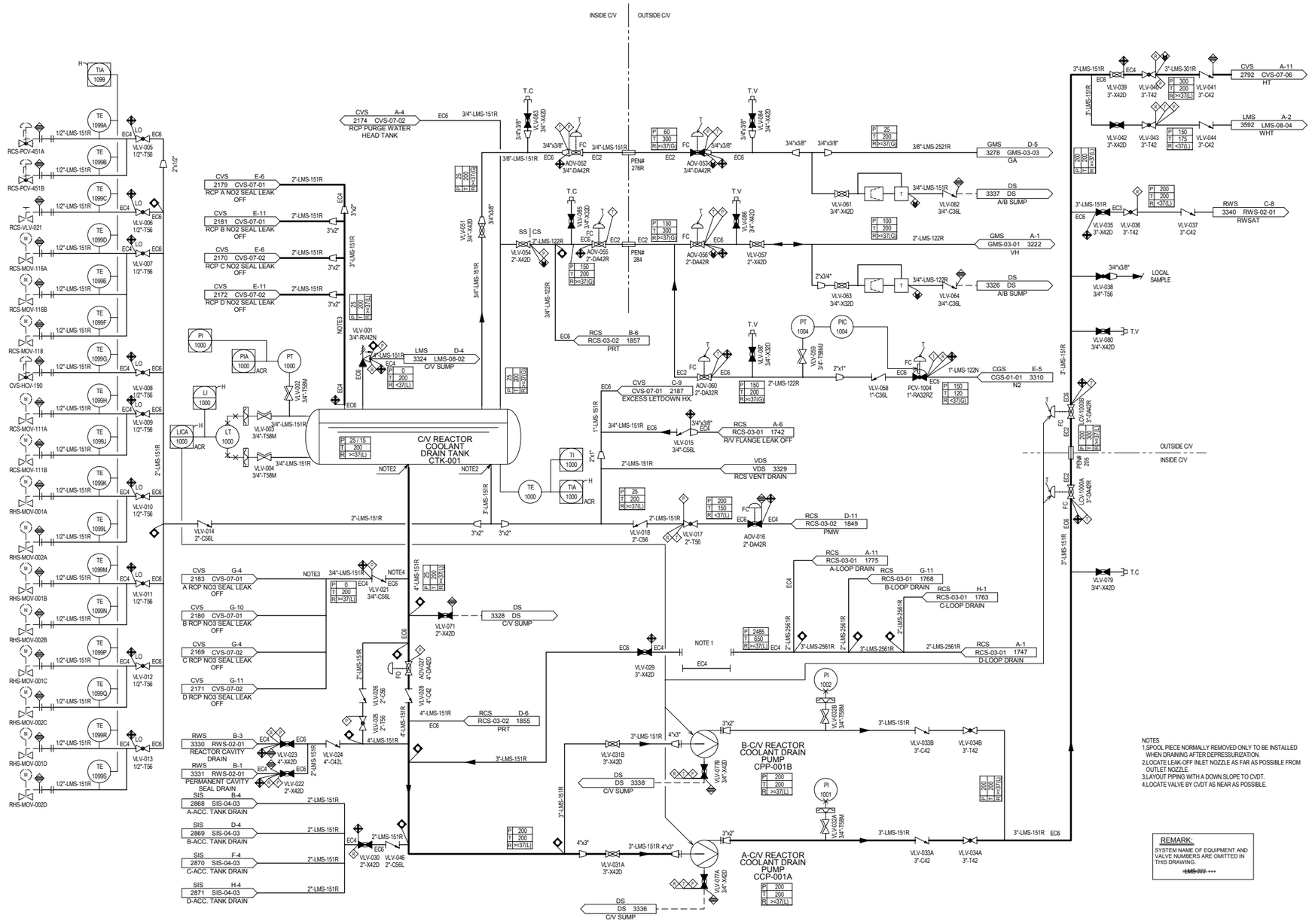

CP COL 11.2(6)

Figure 11.2-201 Liquid Waste Management System Piping and Instrumentation Diagram (Sheet 1 of 9)

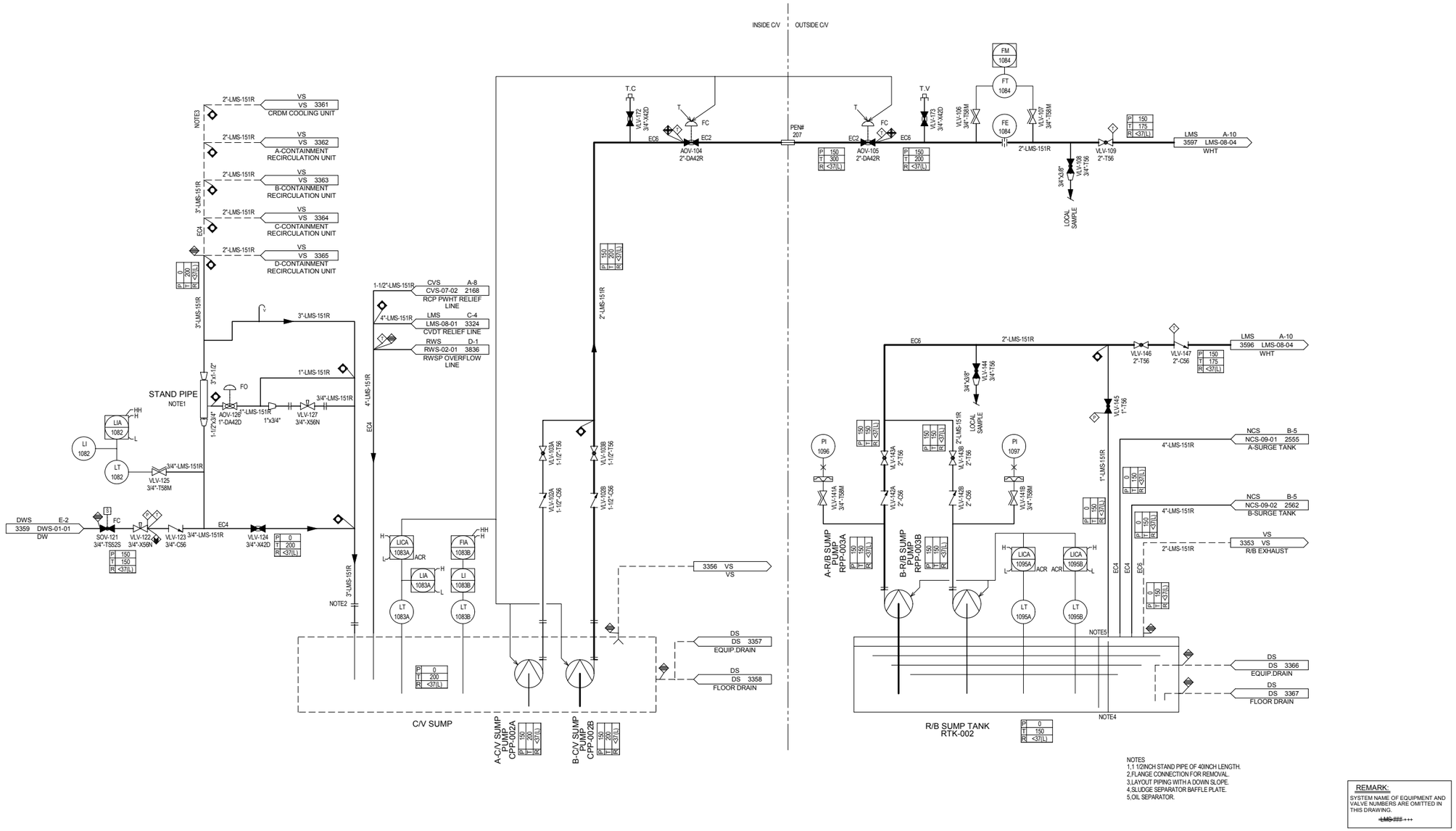

CP COL 11.2(6)

Figure 11.2-201 Liquid Waste Management System Piping and Instrumentation Diagram (Sheet 2 of 9)

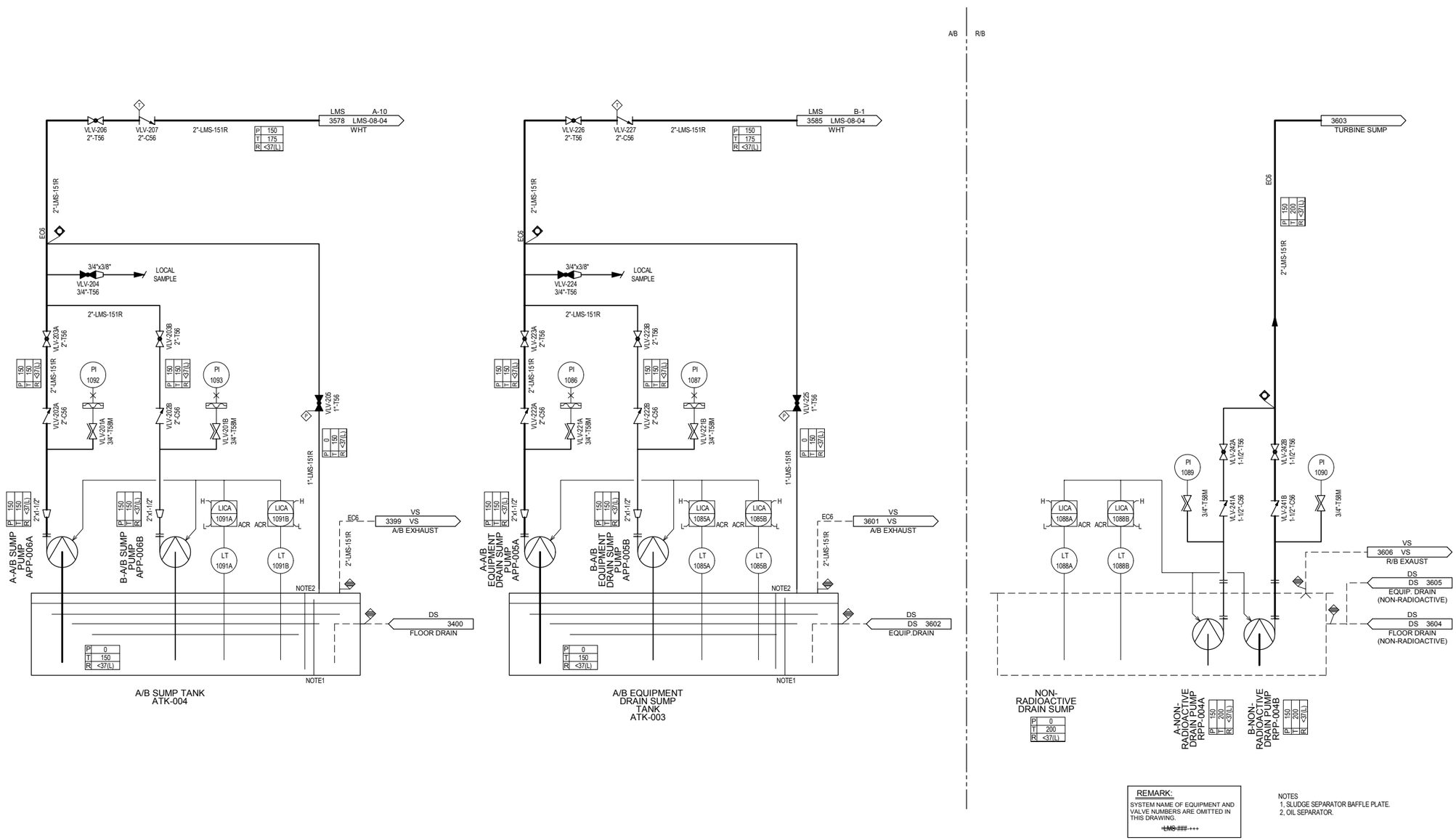

CP COL 11.2(6)

Figure 11.2-201 Liquid Waste Management System Piping and Instrumentation Diagram (Sheet 3 of 9)

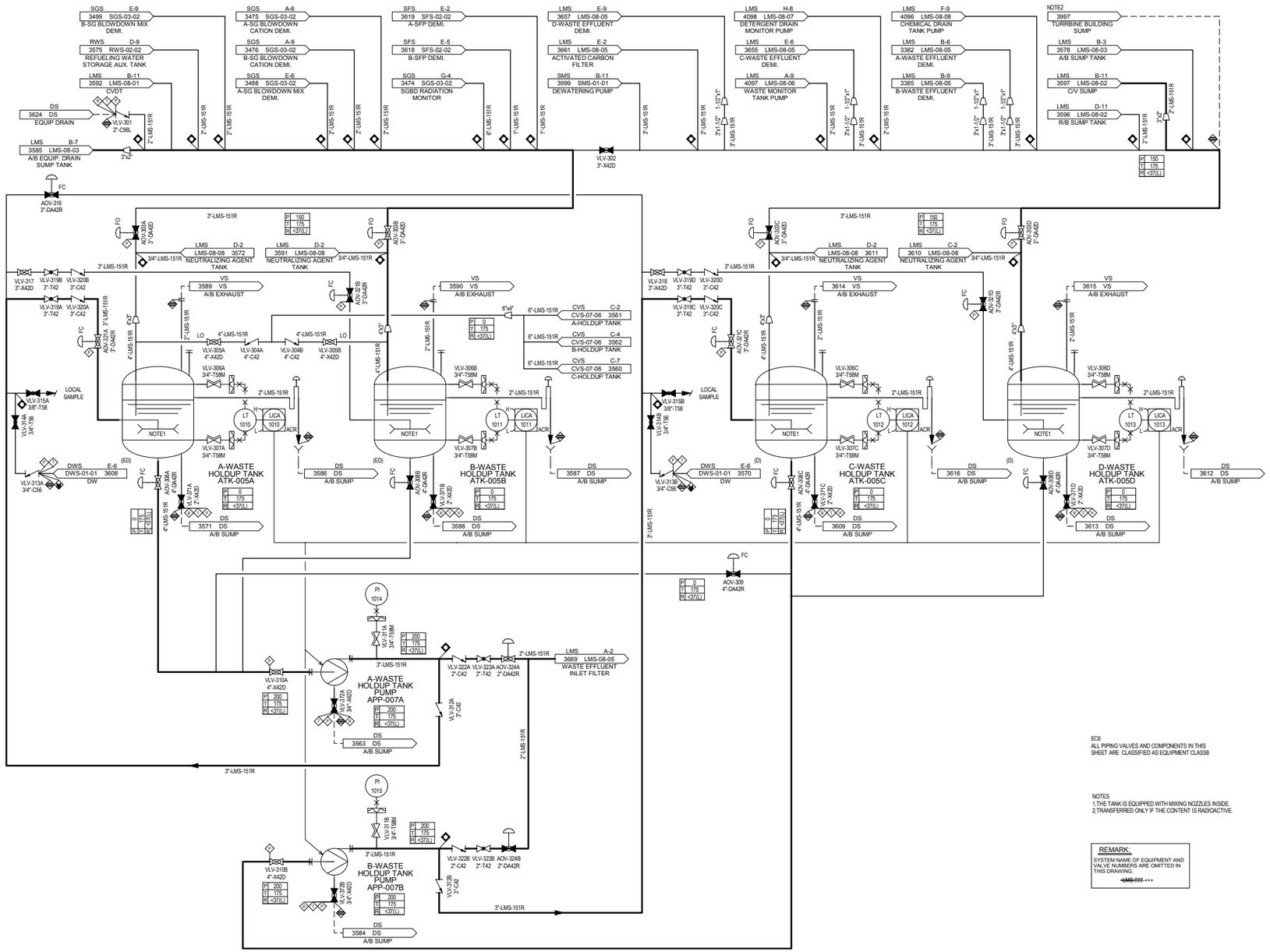

CP COL 11.2(6)

Figure 11.2-201 Liquid Waste Management System Piping and Instrumentation Diagram (Sheet 4 of 9)

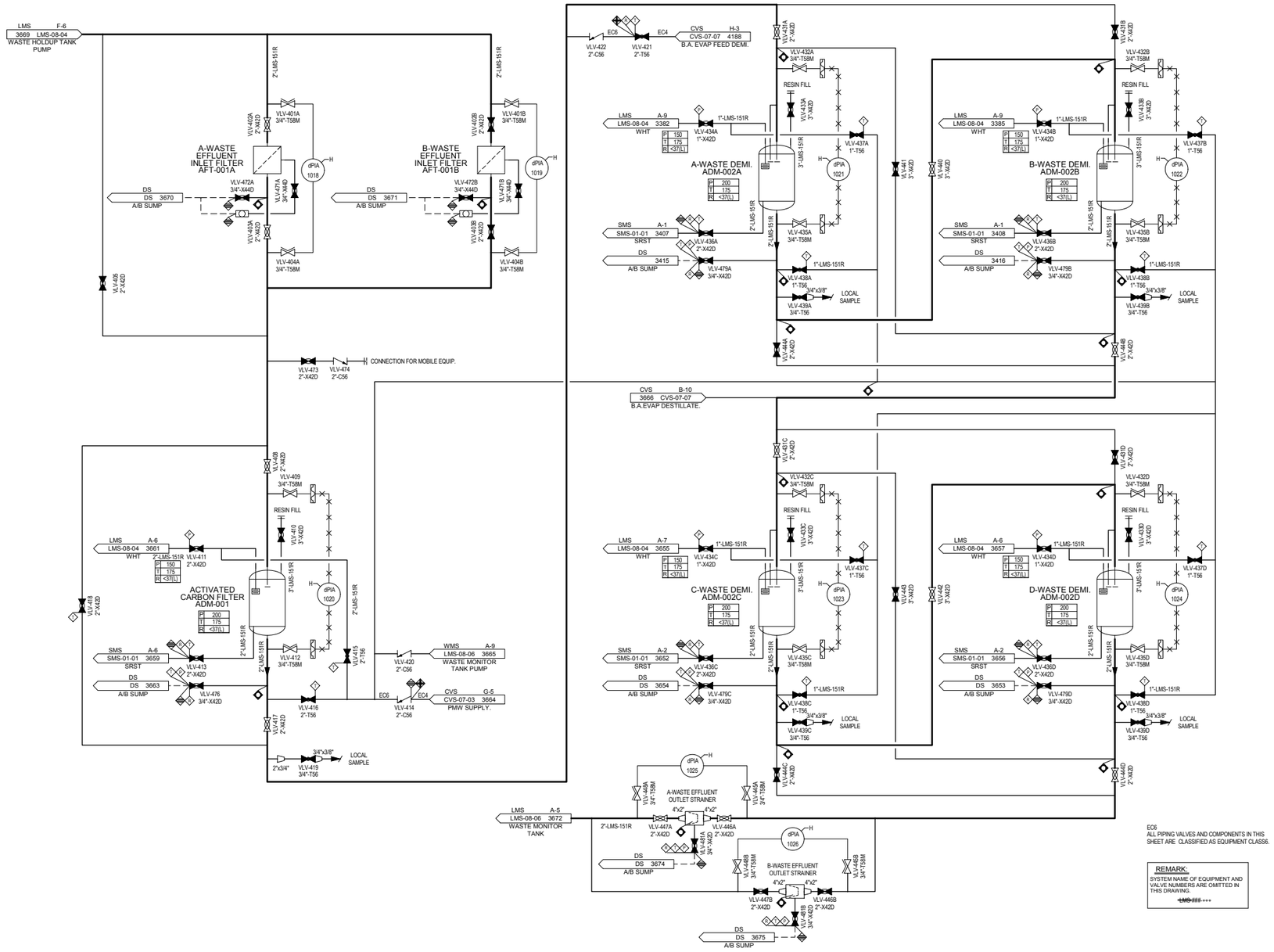

CP COL 11.2(6)

Figure 11.2-201 Liquid Waste Management System Piping and Instrumentation Diagram (Sheet 5 of 9)

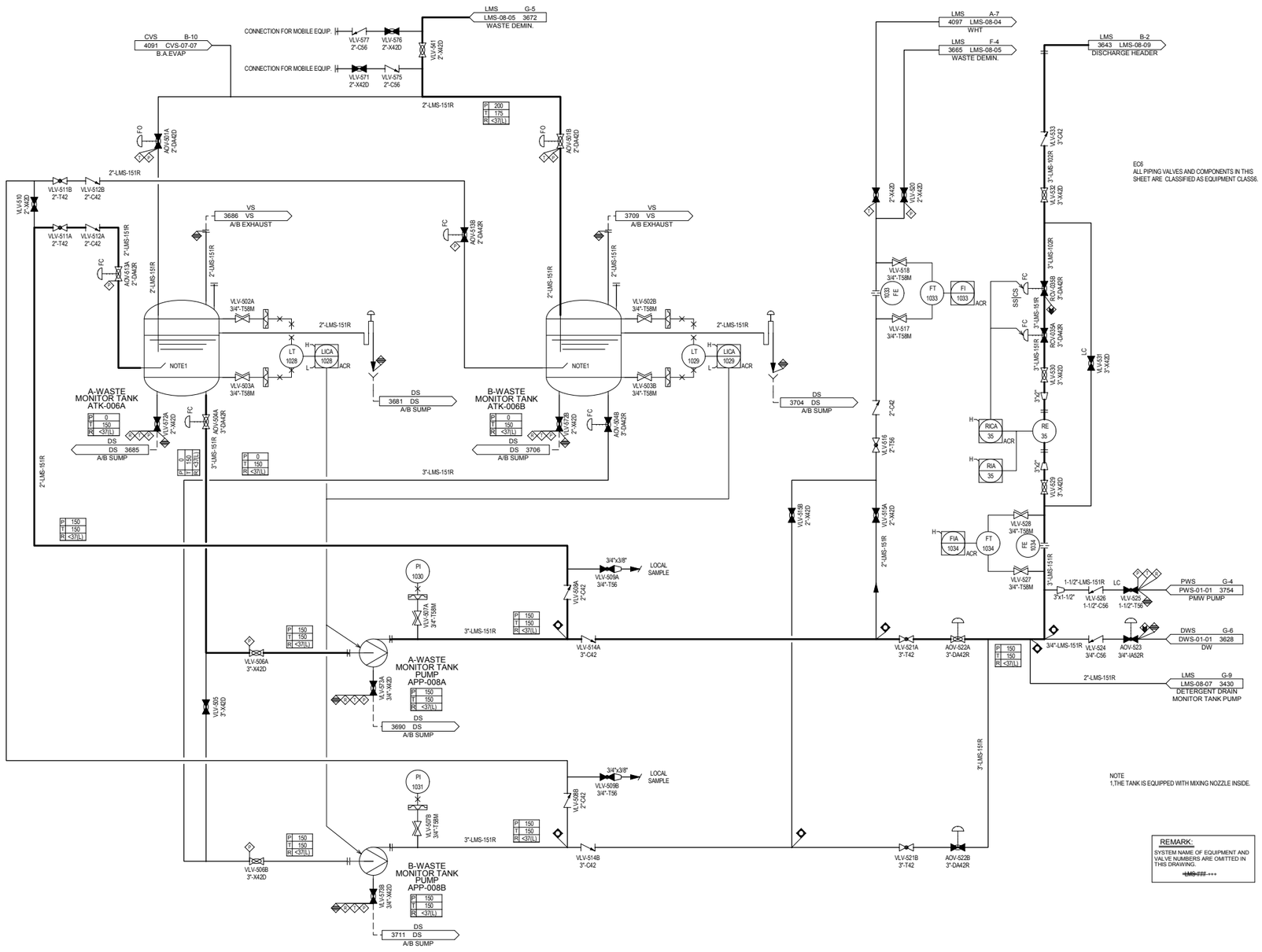

CP COL 11.2(6)

Figure 11.2-201 Liquid Waste Management System Piping and Instrumentation Diagram (Sheet 6 of 9)

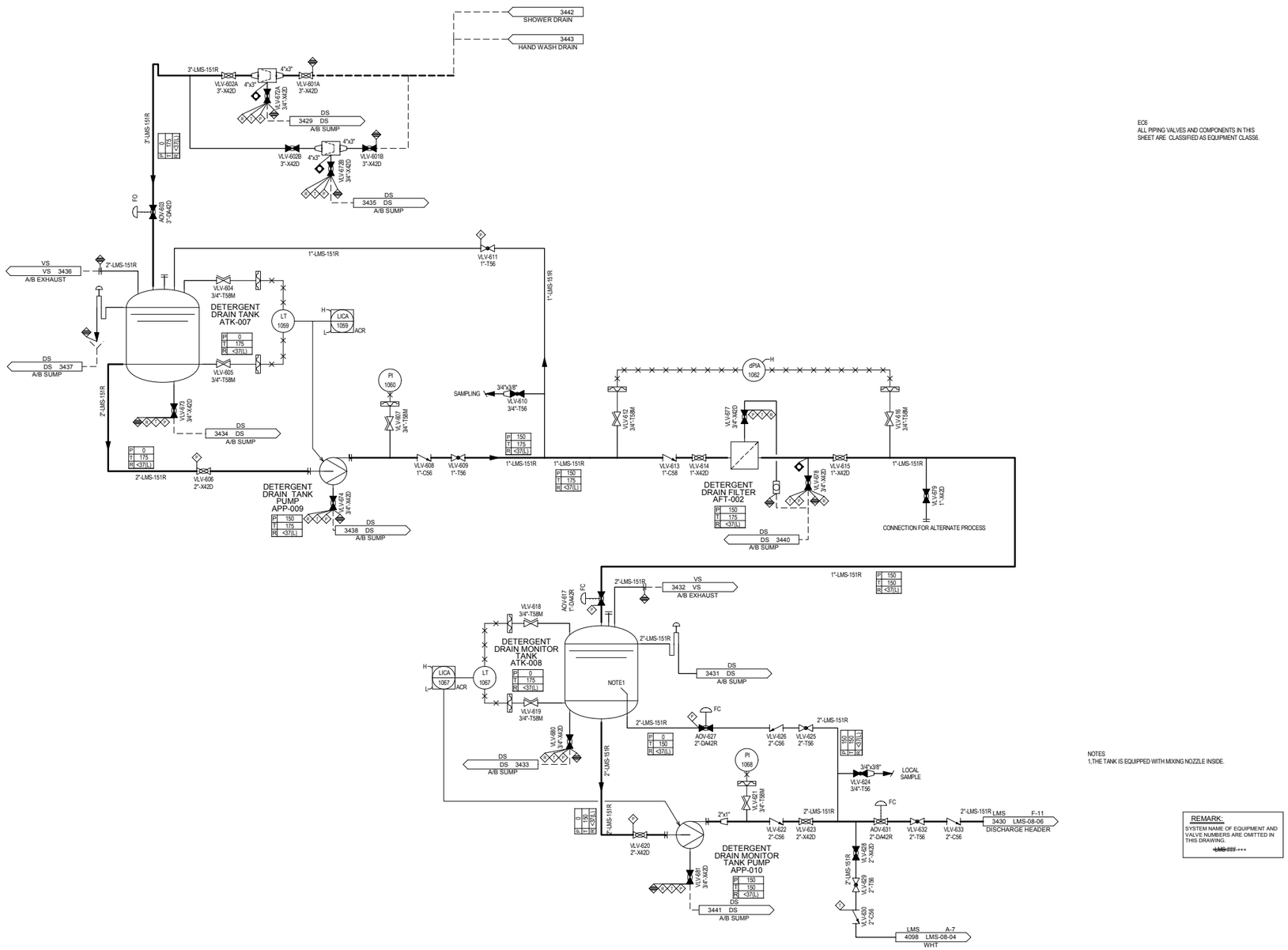

CP COL 11.2(6)

Figure 11.2-201 Liquid Waste Management System Piping and Instrumentation Diagram (Sheet 7 of 9)

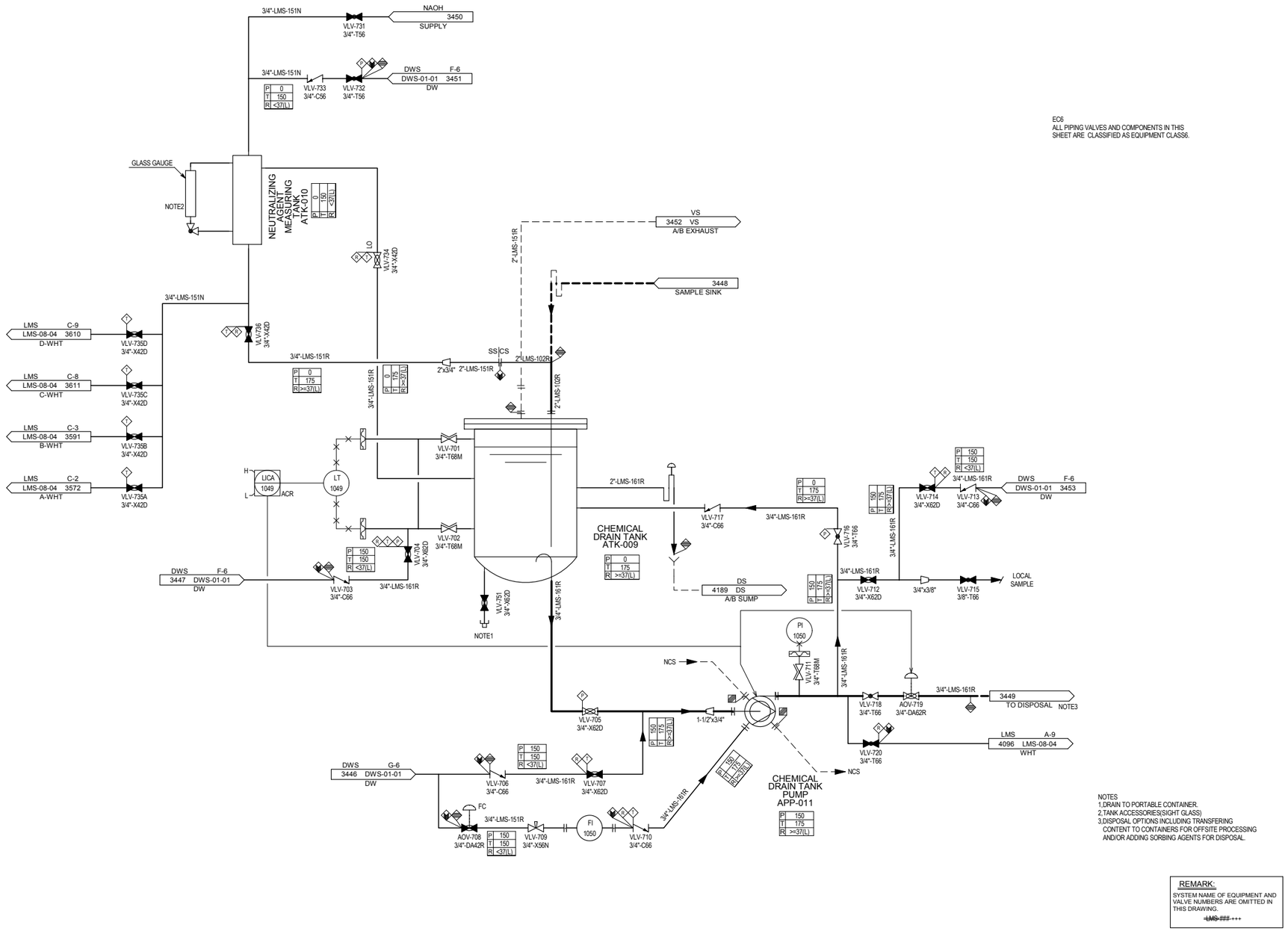

EC6
ALL PIPING VALVES AND COMPONENTS IN THIS SHEET ARE CLASSIFIED AS EQUIPMENT CLASS6.

NOTES
1.DRAIN TO PORTABLE CONTAINER.
2.TANK ACCESSORIES(SIGHT GLASS)
3.DISPOSAL OPTIONS INCLUDING TRANSFERING CONTENT TO CONTAINERS FOR OFFSITE PROCESSING AND/OR ADDING SORBING AGENTS FOR DISPOSAL.

REMARK:
SYSTEM NAME OF EQUIPMENT AND VALVE NUMBERS ARE OMITTED IN THIS DRAWING.
~~LMS~~-###-+++

CP COL 11.2(6)

Figure 11.2-201 Liquid Waste Management System Piping and Instrumentation Diagram (Sheet 8 of 9)

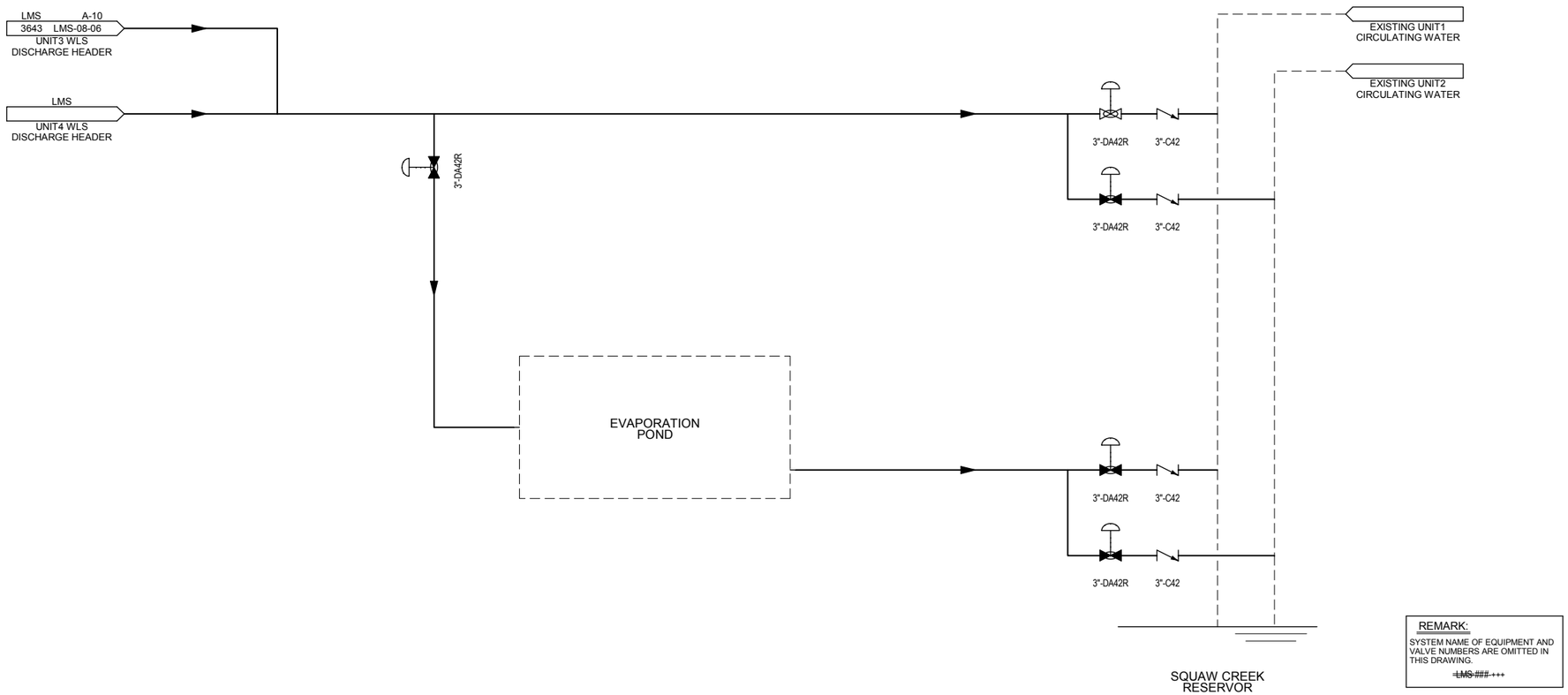

CP COL 11.2(6)

Figure 11.2-201 Liquid Waste Management System Piping and Instrumentation Diagram (Sheet 9 of 9)

11.3 GASEOUS WASTE MANAGEMENT SYSTEM

This section of the referenced DCD is incorporated by reference with the following departures and/or supplements.

11.3.1.5 Site-Specific Cost Analysis

CP COL 11.3(8) Replace the third paragraph in DCD Subsection 11.3.1.5 with the following.

A site-specific cost benefit analysis using the guidance of RG 1.110 was performed based on the site-specific calculated radiation doses as a result of radioactive gaseous effluents during normal operations, including AOOs. The result of the dose analysis indicated a public exposure of less than 1 person-rem per year resulting from the discharge of radioactive effluents, effecting a dose cost of less than $1000 per year, in 1975 dollars. Based on a population dose results of 2.59 person-rem per year (Total Body), 2.97 person-rem per year (Thyroid) and the equipment and operating costs as presented in RG 1.110, the cost benefit analysis demonstrates that addition of processing equipment of reasonable treatment technology is not favorable or cost beneficial, and that the design provided herein complies with 10 CFR 50, Appendix I.

11.3.2 System Description

STD COL 11.3(9) Add the following text at the end of the second paragraph in DCD Subsection 11.3.2.

The piping and instrumentation diagrams (P&IDs) for the gaseous waste management system (GWMS) are provided in Figure 11.3-201 (Sheets 1 through 3).

CP COL 11.3(3) Replace the last sentence in the last paragraph in DCD Subsection 11.3.2 with the following.

The release point of vent stack is at an elevation of 1051’ 5”, which is same height of the top of the containment.

11.3.3.1 Radioactive Effluent Releases and Dose Calculation in Normal Operation

CP COL 11.3(6) Replace the fifth and sixth paragraph in DCD Subsection 11.3.3.1 with the following.

The site-specific long-term annual average atmospheric dispersion factors (χ/Q) are given in Tables 2.3-340 through 2.3-346 are bounded by the value given in DCD Table 2.0-1 (1.6E-05 s/m^3). These values are calculated by methods presented in RG1.111. Therefore, also the radioactive concentrations at exclusion area boundary (EAB) are bounded by the values given in DCD Tables 11.3-5 through 11.3-7. The maximum individual doses are calculated using the GASPAR II Code (Reference 11.3-17) which implements the exposure methodology described in RG1.109. The site-specific parameters for the GASPAR II Code calculation are tabulated in Table 11.3-8R. Calculated doses are tabulated in Table 11.3-9R. The gamma dose in air is 5.77E-03 mrad/yr and the beta dose in air is 4.46E-02 mrad/yr, which are less than the criteria of 10 mrad/yr and 20 mrad/yr, respectively, that are required in 10 CFR 50, Appendix I. All of the dose to total body, the dose to skin, and the dose to organ are less than the criteria in 10 CFR 50, Appendix I: 4.72E-02 mrem/yr for 5 mrem/yr, 8.55E-02 mrem/yr for 15 mrem/yr, and 1.40E+00 mrem/yr [child's bone] for 15 mrem/yr, respectively. The compliance with 10 CFR 20.1302 is also demonstrated.

The population doses within the 50mi are calculated using the GASPAR II Code (Reference 11.3-17). The GASPAR II Code input parameters for the population dose are tabulated in Table 11.3-8R and Table 11.3-201. Calculated doses are 1.58 person-rem(Total body) and 1.98 person-rem(Thyroid).

Additionally, the dose from the evaporation pond is also calculated using the GASPAR II Code (Reference 11.3-17). The half of the liquid effluent is assumed to be diverted into the evaporation pond. Conservatively, all of the radioactive nuclides in the evaporation pond are assumed to be discharged to atmosphere as aerosol and vapor. The annual release rates from the evaporation pond to atmosphere are listed in Table 11.3-202, and parameters for the GASPAR II Code calculation are listed in Table 11.3-203. Calculated individual doses are listed in Table 11.3-204. And population doses are 1.01 person-rem(Total body) and 0.995 person-rem(Thyroid). Moreover, the total of individual doses from the vent stack and the evaporation pond are listed in Table 11.3-205. And the total of population doses are 2.59 person-rem(Total body) and 2.97 person-rem(Thyroid). The results are well below the dose criteria in 10 CFR 50 Appendix I. According to NUREG-0543 (Reference 11.3-201), there is reasonable assurance that sites with up to four operating reactors that have releases within Appendix I design objective values are also in conformance with the EPA Uranium Fuel Cycle Standard, 40 CFR 190. Once the proposed CPNPP Units 3 and 4 are constructed, the Comanche Peak site will consist of four operating reactors.

11.3.3.3 Offsite Dose Calculation Manual

CP COL 11.3(5) Replace the content of DCD Subsection 11.3.3.3 with the following.

The ODCM provides the methodology for calculating the radiation doses to offsite personnel from released effluents. This document is site-specific as it must take into consideration local meteorology, land use patterns, and distances to the site boundary. The ODCM also provides the rationale for compliance with the radiological effluent Technical Specifications and for the calculation of appropriate setpoints for radioactive effluent monitors. The ODCM is developed using the guidance of Nuclear Energy Institute (NEI) Technical Report 07-09, and is implemented in accordance with the milestone listed in Table 13.4-201. CPNPP Units 1 and 2 also have an existing ODCM (Reference 11.3-202) that is to reflect the new reactor units.

11.3.7 Combined License Information

Replace the content of DCD Subsection 11.3.7 with the following.

11.3(1) *Deleted from the DCD.*

11.3(2) *Deleted from the DCD.*

CP COL 11.3(3) ***11.3(3)*** *Onsite vent stack design parameters*

This COL item is addressed in Subsection 11.3.2.

11.3(4) *Deleted from the DCD.*

CP COL 11.3(5) ***11.3(5)*** *Offsite dose calculation manual*

This COL item is addressed in Subsection 11.3.3.3.

CP COL 11.3(6) ***11.3(6)*** *Site-specific dose calculation*

This COL item is addressed in Subsection 11.3.3.1, Table 11.3-8R, Table 11.3-9R, Table 11.3-201, Table 11.3-202, Table 11.3-203, Table 11.3-204 and Table 11.2-205.

11.3(7) *Deleted from the DCD.*

CP COL 11.3(8) ***11.3(8)****Site-specific cost-benefit analysis*

This COL item is addressed in Subsection 11.3.1.5.

STD COL 11.3(9) ***11.3(9)*** *Piping and instrumentation diagrams*

This COL item is addressed in Subsection 11.3.2 and Figure 11.3-201.

11.3.8 References

Add the following references after the last reference in DCD Subsection 11.3.8.

11.3-201 U.S. Nuclear Regulatory Commission, *Methods for Demonstrating LWR Compliance With the EPA Uranium Fuel Cycle Standard (40 CFR 190),* NUREG-0543, Washington, DC, 1980.

11.3-202 *Offsite Dose Calculation Manual for CPNPP Units 1 & 2*, Revision 26.

CP COL 11.3(6)

Table 11.3-8R
Input Parameters for the GASPAR II Code

Parameter	Value
χ/Q (s/m^3)	
For maximum individual dose calculation	
No Decay, Undepleted	4.40E-07
2.28 Day Decay, Undepleted	4.40E-07
8 Day Decay, Depleted	3.90E-07
For population dose calculation	Section 2.3
D/Q (1/m^2)	
For maximum individual dose calculation	4.50E-09
For population dose calculation	Section 2.3
Distance to Residence (mi)	0.79
Midpoint of plant life (s)	9.46E+08(30yr)
Fraction of the year that leafy vegetables are grown.	1.0
Fraction of the year that milk cows are on pasture.	1.0
Fraction of milk-cow feed intake that is from pasture while on pasture.	1.0
Fraction of the year that goats are on pasture.	1.0
Fraction of goat feed intake that is from pasture while on pasture.	1.0
Fraction of the maximum individual's vegetable intake that is from his own garden.	0.76
Average absolute humidity over the growing season(g/m^3).	8.0
Fraction of the year that beef cattle are on pasture.	1.0
Fraction of beef-cattle feed intake that is from pasture while the cattle are on pasture	1.0
Animal considered for milk pathway	Cow and Goat
Annual milk production for each distance and direction within 50 miles (L)	9.08E+08
Annual meat production for each distance and direction within 50 miles(kg)	4.25E+07
Annual vegetable production for each distance and direction within 50 miles (kg)	4.81E+08
Population Distribution	Table 11.3-201
Source term	DCD Table 11.3-5 (Sheet 1 to 3)
Other parameters	RG 1.109

CP COL 11.3(6)

Table 11.3-9R
Calculated Doses from Gaseous Effluents (Sheets 1 of 2)

Type of Dose	Dose [1]
Gamma dose in air (mrad/yr)	5.77E-03
Beta dose in air (mrad/yr)	4.46E-02
Dose to total body (mrem/yr)	3.69E-03
Dose to skin (mrem/yr)	3.45E-02

Note:
1. Dose due to noble gases that include Ar-41

CP COL 11.3(6)

Table 11.3-9R
Calculated Doses from Gaseous Effluents (Sheets 2 of 2)

Pathway	Dose to each organ [1] (mrem/yr)					
	GI-Tract	Bone	Liver	Kidney	Thyroid	Lung
Ground	4.35E-02	4.35E-02	4.35E-02	4.35E-02	4.35E-02	4.35E-02
Vegetable						
Adult	3.44E-02	2.50E-01	3.09E-02	2.48E-02	5.70E-02	2.27E-02
Teen	4.75E-02	3.62E-01	4.76E-02	3.83E-02	7.71E-02	3.53E-02
Child	8.77E-02	7.99E-01	1.01E-01	8.53E-02	1.59E-01	8.04E-02
Meat						
Adult	1.42E-02	3.70E-02	8.36E-03	7.68E-03	8.79E-03	7.42E-03
Teen	9.96E-03	3.09E-02	6.90E-03	6.35E-03	7.13E-03	6.16E-03
Child	1.33E-02	5.77E-02	1.23E-02	1.16E-02	1.28E-02	1.13E-02
Cow Milk						
Adult	9.72E-03	5.06E-02	1.65E-02	1.14E-02	5.40E-02	9.43E-03
Teen	1.66E-02	9.04E-02	2.91E-02	2.02E-02	8.75E-02	1.69E-02
Child	3.72E-02	2.17E-01	5.95E-02	4.42E-02	1.82E-01	3.87E-02
Infant	7.52E-02	3.96E-01	1.19E-01	8.71E-02	4.28E-01	7.89E-02
Goat Milk						
Adult	1.09E-02	6.92E-02	3.33E-02	1.78E-02	6.42E-02	1.23E-02
Teen	1.83E-02	1.21E-01	5.78E-02	3.07E-02	1.03E-01	2.19E-02
Child	3.97E-02	2.86E-01	1.07E-01	6.13E-02	2.13E-01	4.63E-02
Infant	7.90E-02	4.95E-01	2.09E-01	1.14E-01	5.03E-01	9.18E-02
Inhalation						
Adult	1.91E-03	4.80E-04	1.87E-03	1.85E-03	4.27E-03	2.98E-03
Teen	1.92E-03	5.67E-04	1.91E-03	1.88E-03	5.09E-03	3.59E-03
Child	1.65E-03	6.72E-04	1.70E-03	1.66E-03	5.74E-03	3.08E-03
Infant	9.38E-04	2.97E-04	9.92E-04	9.60E-04	4.74E-03	1.95E-03
Total[2]						
Adult	1.15E-01	4.51E-01	1.34E-01	1.07E-01	2.32E-01	9.83E-02
Teen	1.38E-01	6.48E-01	1.87E-01	1.41E-01	3.23E-01	1.27E-01
Child	2.23E-01	1.40E+00	3.25E-01	2.48E-01	6.16E-01	2.23E-01
Infant	1.99E-01	9.35E-01	3.72E-01	2.46E-01	9.79E-01	2.16E-01

Note:
1. Dose due to iodine, particulate, H-3 and C-14
2. Conservatively, both Cow Milk and Goat Milk are considered.

CP COL 11.3(6)

Table 11.3-201
Population Distribution within 50 mi for Population Dose Calculation

Direction	Distance(mi)									
	0-1	1-2	2-3	3-4	4-5	5-10	10-20	20-30	30-40	40-50
N	0	13	39	111	266	74921	16318	25429	138627	30361
NNE	0	17	39	92	180	12920	12812	12527	125434	145586
NE	0	11	37	228	282	5473	6950	17815	694190	1245916
ENE	0	0	25	46	146	5377	4410	67032	134023	270180
E	0	0	84	141	37	340	2658	94985	16681	17747
ESE	0	4	74	82	145	1162	836	3528	7779	18881
SE	0	25	151	4644	3679	1920	500	2778	34161	4755
SSE	0	40	265	136	1314	5917	382	5164	14827	4572
S	0	114	40	29	588	1153	1650	1003	1320	3655
SSW	16	126	19	1135	32	369	780	2903	451	6930
SW	15	95	33	35	70	206	905	1528	1488	1424
WSW	33	109	31	62	29	204	888	40500	10651	5304
W	13	17	31	105	161	313	645	5302	2108	923
WNW	1	5	12	57	110	560	925	1675	1691	1495
NW	1	3	7	8	6	2295	1243	2789	2885	1440
NNW	0	1	17	32	114	1949	6660	5089	58611	10106

CP COL 11.3(6)

Table 11.3-202
Release Rates from the Evaporation Pond to Atmosphere

Isotope	Release Rate[1] (Ci/yr)	Isotope	Release Rate[1] (Ci/yr)
Na-24	2.35E-03	Rh-106	1.95E-02
P-32	0.00E+00	Ag-110M	3.00E-04
Cr-51	6.50E-03	Ag-110	3.60E-05
Mn-54	3.50E-04	Sb-124	0.00E+00
Fe-55	2.50E-04	Te-129M	3.90E-05
Fe-59	5.00E-05	Te-129	1.55E-04
Co-58	9.50E-04	Te-131M	1.25E-04
Co-60	0.00E+00	Te-131	3.80E-05
Ni-63	0.00E+00	I-131	2.00E-04
Zn-65	1.10E-04	Te-132	2.35E-04
W-87	1.75E-04	I-132	1.55E-04
Np-239	2.65E-04	I-133	4.05E-04
Rb-88	1.40E-02	I-134	4.45E-05
Sr-89	3.00E-05	Cs-134	5.00E-04
Sr-90	4.00E-06	I-135	3.90E-04
Sr-91	3.40E-05	Cs-136	1.08E-02
Y-91M	2.20E-05	Cs-137	1.00E-03
Y-91	5.00E-06	Ba-137M	2.30E-04
Y-93	1.45E-04	Ba-140	2.45E-03
Zr-95	1.00E-04	La-140	4.00E-03
Nb-95	5.00E-05	Ce-141	3.00E-05
Mo-99	8.20E-04	Ce-143	2.50E-04
Tc-99M	8.50E-04	Pr-143	3.95E-05
Ru-103	1.56E-03	Ce-144	8.50E-04
Rh-103M	1.55E-03	Pr-144	8.50E-04
Ru-106	1.91E-02	H-3	8.00E+02

Note:
1. The release rates are half of the total liquid release rates that be shown in Table 11.2-10R.

CP COL 11.3(6)

Table 11.3-203
Input Parameters for Dose Calculation from Evaporation Pond

Parameter	Value
χ/Q (s/m^3)	
For maximum individual dose calculation	
No Decay, Undepleted	3.10E-06
2.28 Day Decay, Undepleted	3.10E-06
8 Day Decay, Depleted	2.90E-06
For population dose calculation	Section 2.3
D/Q (1/m^2)	
For maximum individual dose calculation	2.10E-08
For population dose calculation	Section 2.3
Distance to Residence (mi)	0.31
Midpoint of plant life (s)	9.46E+08(30yr)
Fraction of the year that leafy vegetables are grown.	1.0
Fraction of the year that milk cows are on pasture.	1.0
Fraction of milk-cow feed intake that is from pasture while on pasture.	1.0
Fraction of the year that goats are on pasture.	1.0
Fraction of goat feed intake that is from pasture while on pasture.	1.0
Fraction of the maximum individual's vegetable intake that is from his own garden.	0.76
Average absolute humidity over the growing season(g/m^3).	8.0
Fraction of the year that beef cattle are on pasture.	1.0
Fraction of beef-cattle feed intake that is from pasture while the cattle are on pasture	1.0
Animal considered for milk pathway	Cow and Goat
Annual milk production for each distance and direction within 50 miles (L)	9.08E+08
Annual meat production for each distance and direction within 50 miles(kg)	4.25E+07
Annual vegetable production for each distance and direction within 50 miles (kg)	4.81E+08
Population Distribution	Table 11.3-201
Source term	Table 11.3-202
Other parameters	RG 1.109

CP COL 11.3(6)

Table 11.3-204
Calculated Doses from Evaporation Pond

Pathway	Dose to each organ [1] (mrem/yr)					
	GI-Tract	Bone	Liver	Kidney	Thyroid	Lung
Ground	2.20E-02	2.20E-02	2.20E-02	2.20E-02	2.20E-02	2.20E-02
Vegetable						
Adult	2.87E-01	1.33E-02	1.16E-01	1.13E-01	1.10E-01	1.04E-01
Teen	3.38E-01	2.04E-02	1.38E-01	1.34E-01	1.26E-01	1.19E-01
Child	3.54E-01	4.68E-02	2.17E-01	2.09E-01	1.99E-01	1.85E-01
Meat						
Adult	1.89E+00	2.97E-02	1.62E-02	7.12E-02	1.50E-02	1.48E-02
Teen	1.18E+00	2.50E-02	9.98E-03	5.62E-02	9.01E-03	8.91E-03
Child	7.22E-01	4.69E-02	1.21E-02	7.31E-02	1.10E-02	1.08E-02
Cow Milk						
Adult	3.97E-02	7.69E-03	5.11E-02	4.18E-02	4.38E-02	3.61E-02
Teen	5.10E-02	1.36E-02	7.35E-02	5.73E-02	5.95E-02	4.80E-02
Child	7.53E-02	3.18E-02	1.18E-01	9.07E-02	1.00E-01	7.58E-02
Infant	1.13E-01	5.32E-02	2.00E-01	1.39E-01	1.78E-01	1.17E-01
Goat Milk						
Adult	7.39E-02	2.24E-02	1.19E-01	9.15E-02	8.15E-02	7.51E-02
Teen	9.59E-02	3.97E-02	1.76E-01	1.27E-01	1.09E-01	1.01E-01
Child	1.48E-01	9.33E-02	2.83E-01	2.02E-01	1.80E-01	1.59E-01
Infant	2.23E-01	1.56E-01	4.93E-01	3.09E-01	3.05E-01	2.47E-01
Inhalation						
Adult	5.85E-02	5.16E-04	5.68E-02	5.69E-02	5.68E-02	7.43E-02
Teen	5.91E-02	7.25E-04	5.75E-02	5.75E-02	5.74E-02	8.74E-02
Child	5.13E-02	9.89E-04	5.08E-02	5.09E-02	5.08E-02	7.74E-02
Infant	2.93E-02	5.44E-04	2.93E-02	2.93E-02	2.94E-02	5.08E-02
Total[2]						
Adult	2.37E+00	9.57E-02	3.81E-01	3.97E-01	3.29E-01	3.26E-01
Teen	1.75E+00	1.21E-01	4.78E-01	4.54E-01	3.83E-01	3.86E-01
Child	1.37E+00	2.42E-01	7.02E-01	6.48E-01	5.63E-01	5.30E-01
Infant	3.87E-01	2.32E-01	7.45E-01	4.99E-01	5.34E-01	4.37E-01

Note:
1. Dose due to iodine, particulate and H-3
2. Conservatively, both Cow Milk and Goat Milk are considered.

CP COL 11.3(6)

Table 11.3-205
Total Doses Due to Gaseous Effluent from Vent Stack and Evaporation Pond

Pathway	Dose to each organ [1] (mrem/yr)					
	GI-Tract	Bone	Liver	Kidney	Thyroid	Lung
Ground	6.55E-02	6.55E-02	6.55E-02	6.55E-02	6.55E-02	6.55E-02
Vegetable						
Adult	3.21E-01	2.63E-01	1.47E-01	1.38E-01	1.67E-01	1.27E-01
Teen	3.86E-01	3.82E-01	1.86E-01	1.72E-01	2.03E-01	1.54E-01
Child	4.42E-01	8.46E-01	3.18E-01	2.95E-01	3.58E-01	2.65E-01
Meat						
Adult	1.90E+00	6.67E-02	2.46E-02	7.89E-02	2.38E-02	2.22E-02
Teen	1.19E+00	5.59E-02	1.69E-02	6.25E-02	1.61E-02	1.51E-02
Child	7.35E-01	1.05E-01	2.44E-02	8.47E-02	2.38E-02	2.21E-02
Cow Milk						
Adult	4.94E-02	5.83E-02	6.76E-02	5.32E-02	9.78E-02	4.55E-02
Teen	6.76E-02	1.04E-01	1.03E-01	7.75E-02	1.47E-01	6.49E-02
Child	1.12E-01	2.49E-01	1.77E-01	1.35E-01	2.82E-01	1.15E-01
Infant	1.88E-01	4.49E-01	3.19E-01	2.26E-01	6.06E-01	1.96E-01
Goat Milk						
Adult	8.48E-02	9.16E-02	1.52E-01	1.09E-01	1.46E-01	8.74E-02
Teen	1.14E-01	1.61E-01	2.34E-01	1.58E-01	2.12E-01	1.23E-01
Child	1.88E-01	3.79E-01	3.90E-01	2.63E-01	3.93E-01	2.05E-01
Infant	3.02E-01	6.51E-01	7.02E-01	4.23E-01	8.08E-01	3.39E-01
Inhalation						
Adult	6.04E-02	9.96E-04	5.87E-02	5.88E-02	6.11E-02	7.73E-02
Teen	6.10E-02	1.29E-03	5.94E-02	5.94E-02	6.25E-02	9.10E-02
Child	5.29E-02	1.66E-03	5.25E-02	5.26E-02	5.65E-02	8.05E-02
Infant	3.02E-02	8.41E-04	3.03E-02	3.03E-02	3.41E-02	5.28E-02
Total[2]						
Adult	2.48E+00	5.47E-01	5.16E-01	5.04E-01	5.61E-01	4.25E-01
Teen	1.88E+00	7.70E-01	6.64E-01	5.95E-01	7.06E-01	5.14E-01
Child	1.60E+00	1.65E+00	1.03E+00	8.96E-01	1.18E+00	7.53E-01
Infant	5.86E-01	1.17E+00	1.12E+00	7.45E-01	1.51E+00	6.53E-01

Note:
1. Dose due to iodine, particulate and H-3
2. Conservatively, both Cow Milk and Goat Milk are considered.

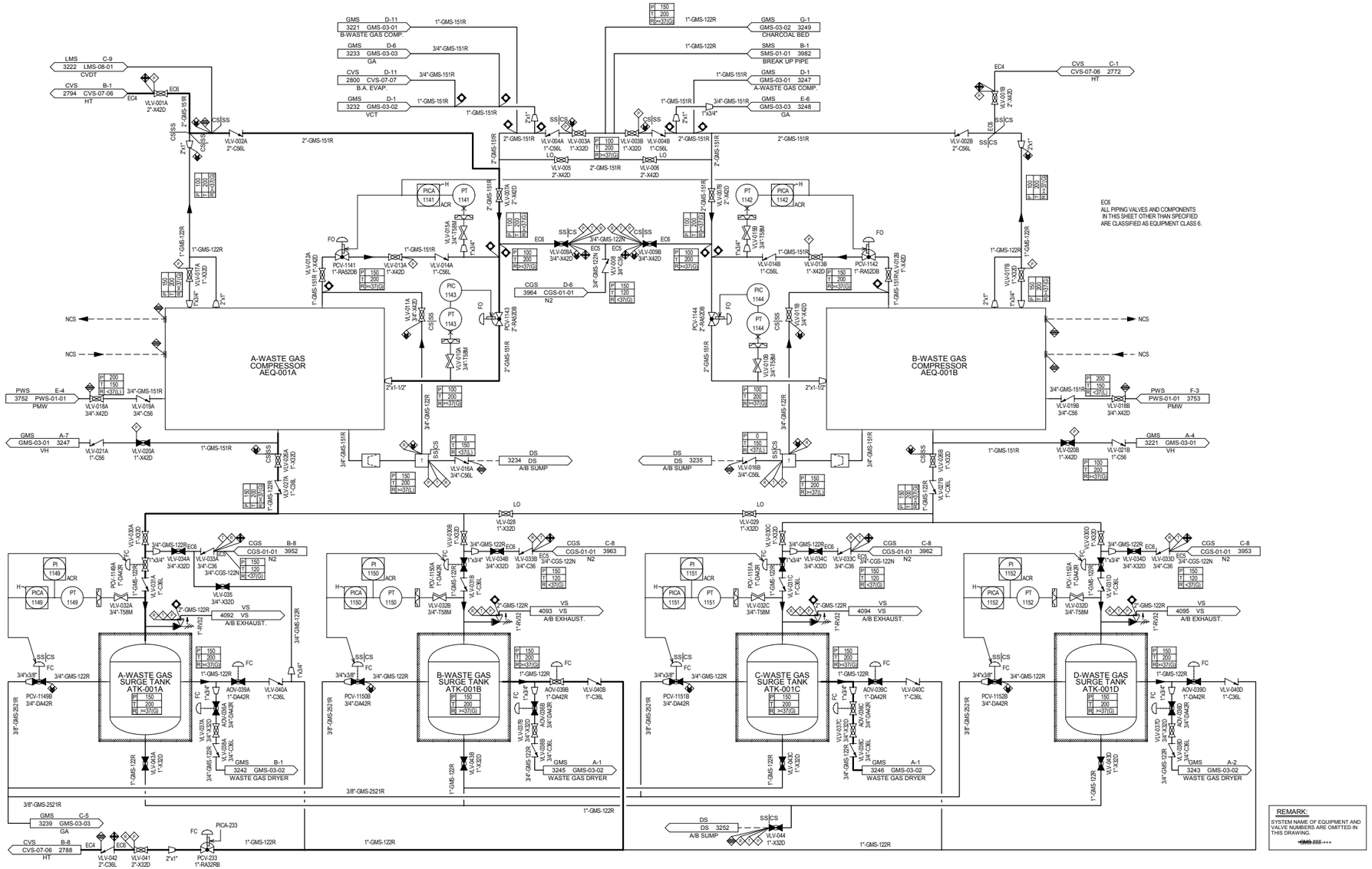

STD COL 11.3(9)

Figure 11.3-201 Gaseous Waste Management System Piping and Instrumentation Diagram (Sheet 1 of 3)

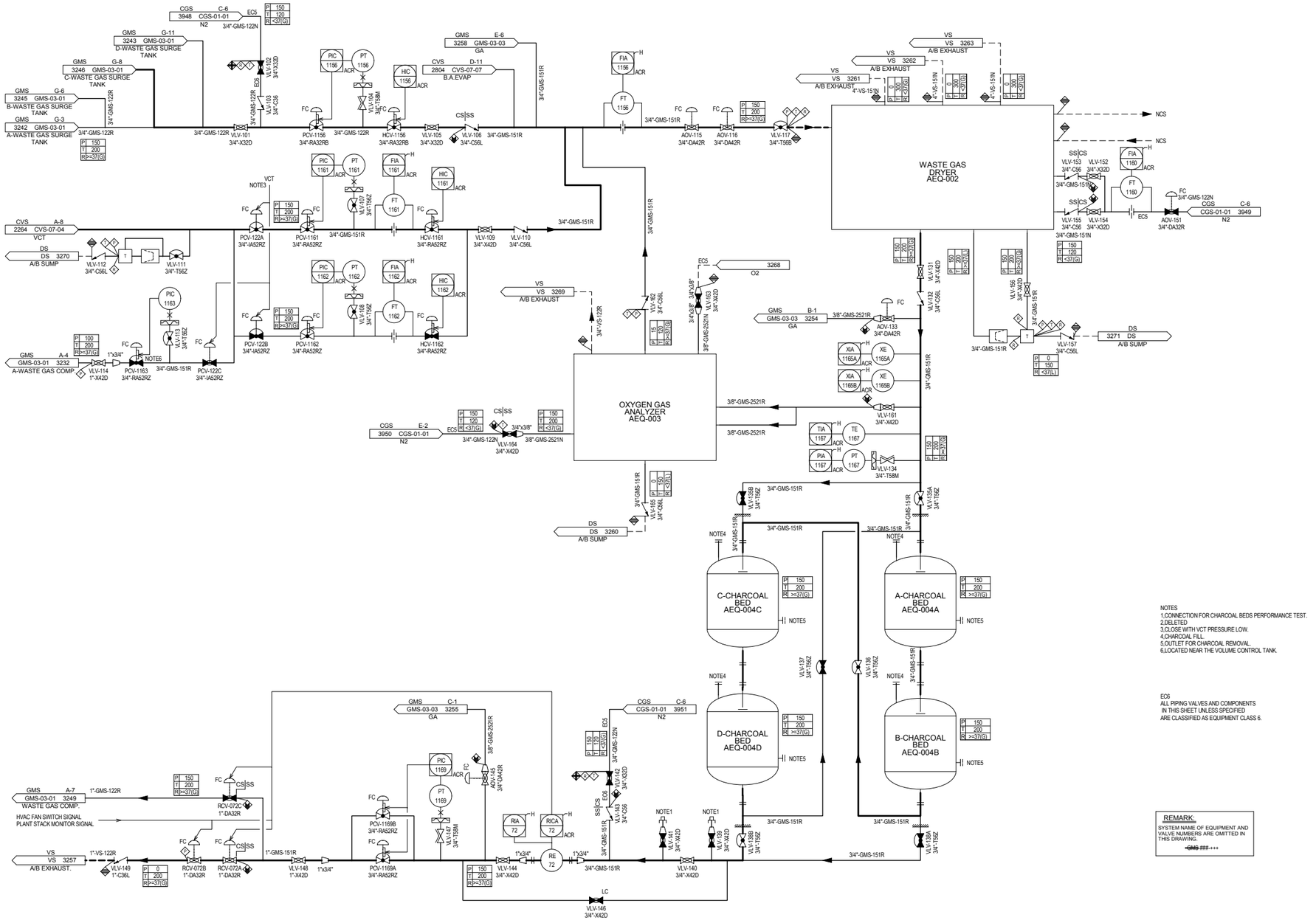

STD COL 11.3(9)

Figure 11.3-201 Gaseous Waste Management System Piping and Instrumentation Diagram (Sheet 2 of 3)

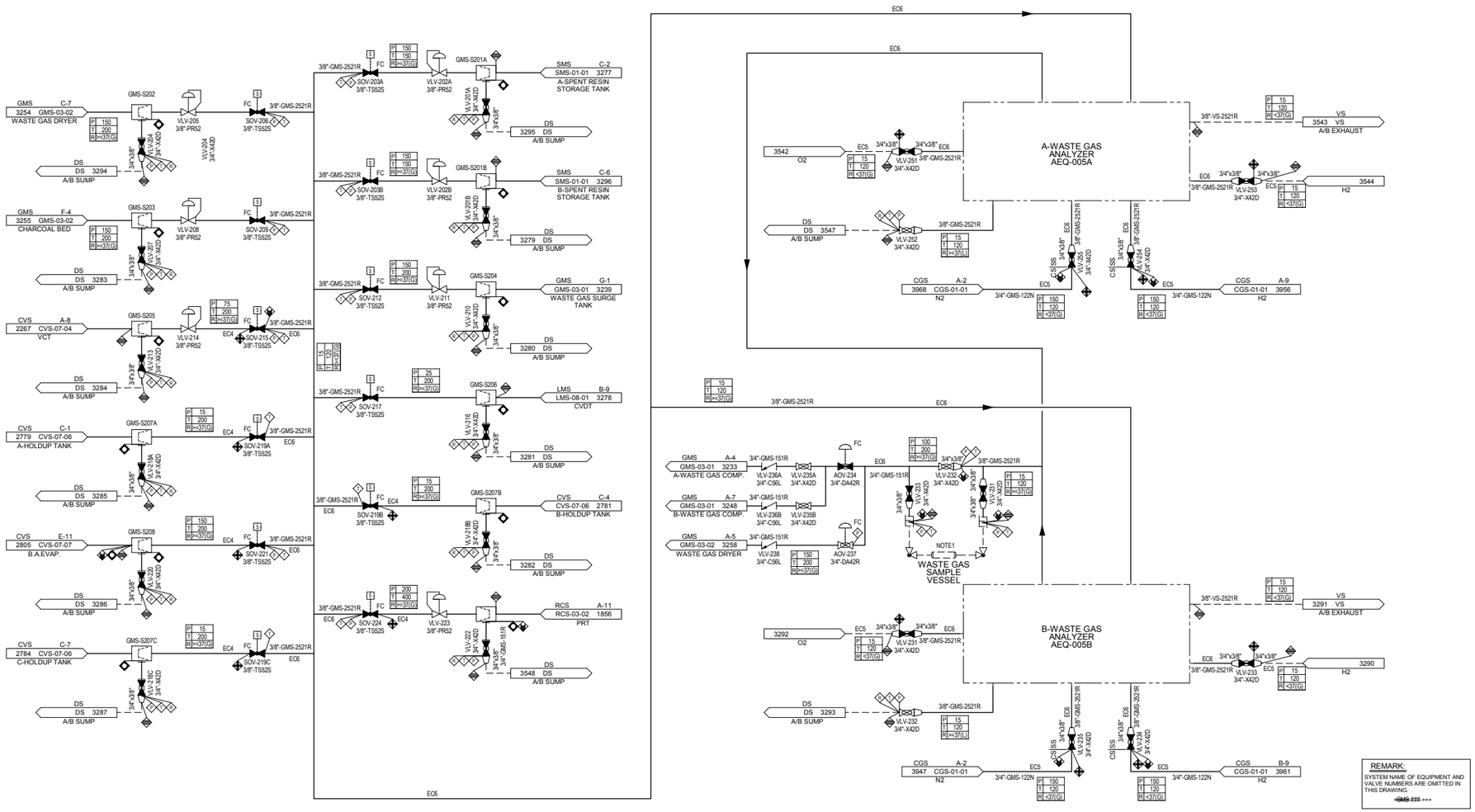

STD COL 11.3(9)

Figure 11.3-201 Gaseous Waste Management System Piping and Instrumentation Diagram (Sheet 3 of 3)

11.4 SOLID WASTE MANAGEMENT SYSTEM

This section of the referenced DCD is incorporated by reference with the following departures and/or supplements.

11.4.1.3 Other Design Considerations

CP COL 11.4(5) Replace the fourth bullet in DCD Subsection 11.4.1.3 with the following.

- The current design provides collection and packaging of potentially contaminated clothing for offsite processing and/or disposal. Laundry services are performed offsite at appropriate vendor facilities. Waste resulting from these processes is forwarded directly from the vendor's location to the disposal facility or returned to the long-term storage facility, as appropriate.

11.4.1.5 Site-Specific Cost-Benefit Analysis

STD COL 11.4(6) Replace the second paragraph in DCD Subsection 11.4.1.5 with the following.

The solid waste management system (SWMS) is designed to handle spent resin, sludge, oily waste, spent filters, and dry active waste including contaminated clothing, broken equipment, and maintenance items that cannot be easily decontaminated and reused. The SWMS provides staging areas and handling equipment for waste packaging and storage for the above wastes. Any liquid and gaseous wastes resulting from the solid waste handling operation are collected and returned to LWMS and GWMS, for processing. As such, there is no unique direct release pathway from the solid waste handling operation to the environment, and a cost benefit analysis for the SWMS is included in the consideration of the LWMS and GWMS.

11.4.1.6 Mobile or Temporary Equipment

CP COL 11.4(5)
CP COL 11.4(7)

Add the following text at the last sentence in DCD Subsection 11.4.1.6.

The de-watering station is contracted for vendor services.

11.4.2.1.1 Dry Active Wastes

CP COL 11.4(1) Replace the last paragraph in DCD Subsection 11.4.2.1.1 with the following.

Descriptions of wastes other than normally accumulated non-radioactive wastes such as wasted activated carbon from GWMS charcoal beds, solid wastes coming from component (Steam generator, Reactor vessel etc.) replacement activities, and other unusual cases will be described in the process control program and will be implemented in accordance with the milestone listed in Table 13.4-201.

11.4.2.2.1 Spent Resin Handling and De-watering Subsystem

STD COL 11.4(8) Add the following text at the end of the second paragraph in DCD Subsection 11.4.2.2.1.

The P&ID for the SWMS is provided in Figure 11.4-201.

11.4.2.3 Packaging, Storage, and Shipping

CP COL 11.4(1) Replace the last sentence of the fourth paragraph in DCD Subsection 11.4.2.3 with the following.

A common radwaste interim storage facility is provided between Units 3 and 4 and is designed to store classes A, B, and C wastes from all four CPNPP units for up to 10 years. The common radwaste facility is designed to maintain onsite and offsite radiological doses within the limits in 10 CFR Part 20 and to maintain occupational exposures ALARA. This common radwaste interim storage facility reflects the site-specific waste volume reduction requirements and the current waste disposal strategy of the State of Texas. As design proceeds, the interim storage facility design may be revised to meet future waste acceptance and disposal criteria.

The common radwaste interim storage facility also includes a separate storage area for mixed waste and temporary staging of large equipment items for maintenance.

This interim storage facility is provided with the knowledge that as of July 1, 2008, the low level radioactive waste disposal facility in Barnwell, South Carolina, is no longer accepting Class B and C wastes from sources in states such as Texas

that are outside of the Atlantic Compact, and that the disposal facility in Clive, Utah, is still accepting Class A waste from out of state. Class B and C waste constitutes a small fraction of the total low level radioactive waste that will be generated by CPNPP.

CPNPP Units 3 and 4 are scheduled to load fuel and begin commercial operation no earlier than 2016. Therefore, these units will not be generating Class B and C waste prior to that time. Although the interim storage facility is designed to store the Class A, B and C wastes generated by CPNPP Units 1, 2, 3, and 4 for 10 years, the facility could store waste for a proportionally longer period of operation if only Class B and C wastes were to be stored in that facility. It is likely that another disposal facility will be available that will accept Class B and C waste from sources in Texas well before the storage space in the interim storage facility is filled. In particular, in 2004, Waste Control Specialists applied for a license from the Texas Commission on Environmental Quality to develop a disposal facility in Andrews County, Texas, for Class A, B, and C waste. In August 2008 Waste Control Specialists received a draft license from the Texas Commission on Environmental Quality. According to its website, Waste Control Specialists plans on opening the Andrews County site in about December of 2010. Notwithstanding this, if additional storage capacity were eventually to be needed, CPNPP could expand the interim storage facility or construct additional storage facilities in accordance with applicable NRC guidance, such as Regulatory Issue Summary 2008-12, Considerations for Extended Interim Storage of Low-Level Radioactive Waste by Fuel Cycle and Materials Licenses, and Standard Review Plan 11.4.

11.4.3.2 Process Control Program

CP COL 11.4(3) Replace the content of DCD Subsection 11.4.3.2 with the following.

This subsection adopts NEI 07-10, which is currently under review by the NRC staff. The Process Control Program (PCP) describes the administrative and operational controls used for the solidification of liquid or wet solid waste and the dewatering of wet solid waste. The purpose of the PCP is to provide the necessary controls such that the final disposal waste product meets applicable federal regulations (10 CFR Parts 20, 50, 61, 71, and 49 CFR Part 173), state regulations, and disposal site waste form requirements for burial at a low level waste disposal site that is licensed in accordance with 10 CFR Part 61. Waste processing (solidification and/or dewatering) equipment and services may be provided by third-party vendors. The process used in the existing design meets the applicable requirements of the PCP. Table 13.4-201 provides the milestone for PCP implementation.

Additional onsite radioactive solid waste storage is provided and is discussed in Subsection 11.4.2.3.

11.4.4.5 Mobile De-watering System

CP COL 11.4(4)
CP COL 11.4(7)

Replace the last sentence in DCD Subsection 11.4.4.5 with the following.

The de-watering station is vendor supplied and operated with the specific requirements and layout based on vendor specifications. Operating procedures will be developed and implemented with PCP so that the guidance and information in IE Bulletin 80-10 (Reference 11.4-29) is followed. The milestone for procedure implementation is listed in Table 13.4-201.

11.4.8 Combined License Information

Replace the content of DCD Subsection 11.4.8 with the following.

CP COL 11.4(1) ***11.4(1)*** *Plant-specific needs for onsite waste storage*

This COL item is addressed in Subsection 11.4.2.1.1 and 11.4.2.3.

11.4(2) *Deleted from the DCD*

CP COL 11.4(3) ***11.4(3)*** *Plan for the process control program describing the process and effluent monitoring and sampling program*

This COL item is addressed in Subsection 11.4.3.2.

CP COL 11.4(4) ***11.4(4)*** *Mobile/portable SWMS connections*

This COL item is addressed in Subsection 11.4.4.5.

CP COL 11.4(5) ***11.4(5)*** *Offsite laundry facility processing and/or a mobile compaction*

This COL item is addressed in Subsections 11.4.1.3 and 11.4.1.6.

STD COL 11.4(6) ***11.4(6)*** *Site-specific cost benefit analysis*

This COL item is addressed in Subsection 11.4.1.5.

CP COL 11.4(7) ***11.4(7)*** *Site-specific solid waste processing facility*

This COL item is addressed in Subsections 11.4.1.6 and 11.4.4.5.

STD COL 11.4(8) ***11.4(8)*** *Piping and instrumentation diagrams*

This COL item is addressed in Subsection 11.4.2.2.1 and Figure 11.4-201.

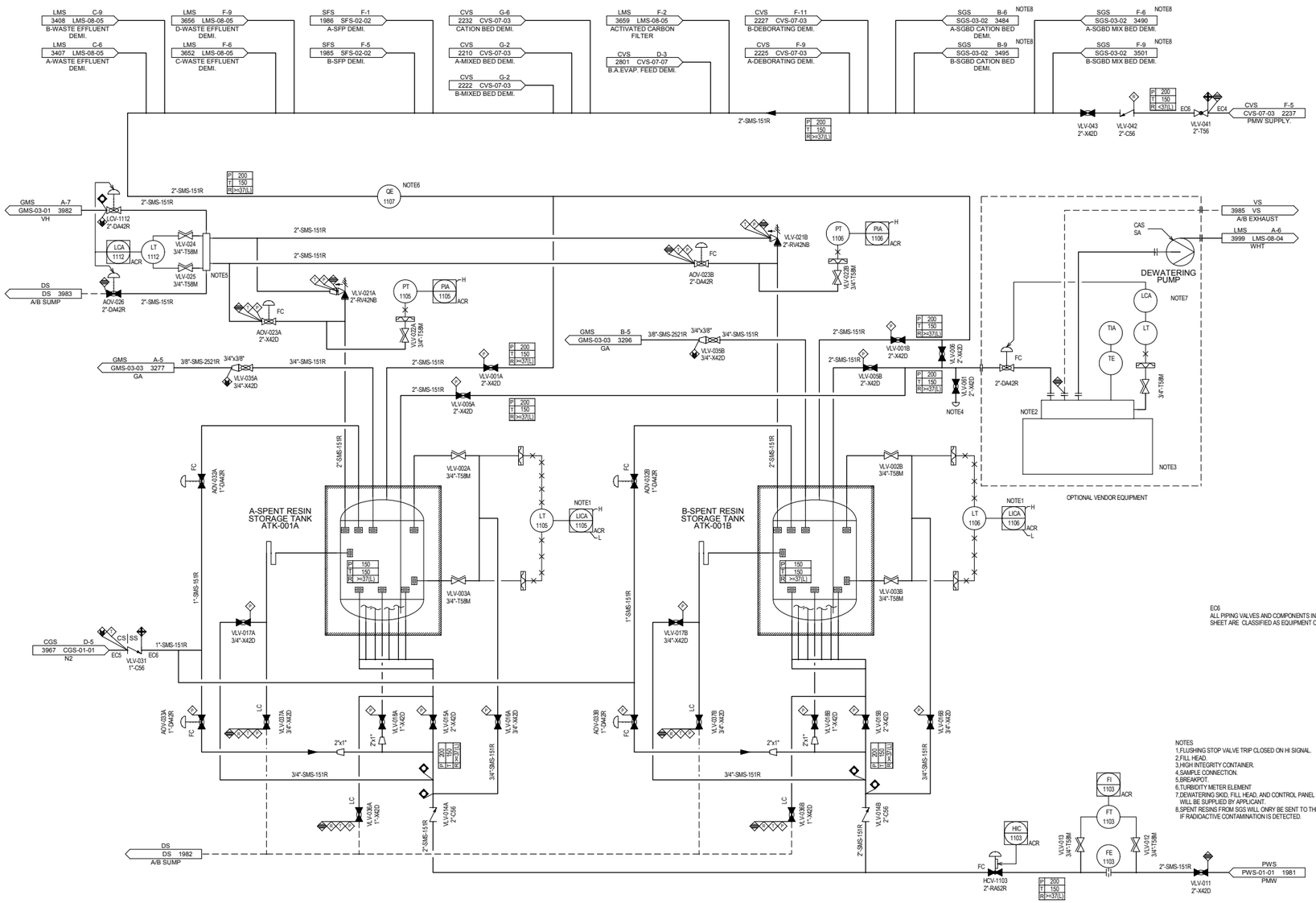

STD COL 11.4(8)

Figure 11.4-201 Solid Waste Management System Piping and Instrumentation Diagram

11.5 PROCESS EFFLUENT RADIATION MONITORING AND SAMPLING SYSTEMS

This section of the referenced DCD is incorporated by reference with the following departures and/or supplements.

CP SUP 11.5(1) Add the following text to the end of the last paragraph in DCD Section 11.5.

Essential service water(ESW) pipe tunnel structure at elevation 793'-1'' has been changed in site-specific layout. However, the location of process effluent radiation monitors in DCD Chapter 11 is not affected by the modification of ESW pipe tunnel structure, and Figures 11.5-2 can be used except for the structure of ESW pipe tunnel remains valid. The structure of ESW pipe tunnel is shown on Figure 1.2-2R.

11.5.2.6 Reliability and Quality Assurance

CP COL 11.5(4)
CP COL 11.5(5) Replace the first sentence in the third paragraph in DCD Subsection 11.5.2.6 with the following.

The procedures for acquiring and evaluating samples of radioactive effluents, as well as procedures for inspection, calibration, and maintenance of the monitoring and sampling equipment are developed in accordance with RG 1.21 and RG 4.15. The procedures for the radioactive waste systems are developed in accordance with RG 1.33. The analytical procedures are developed in accordance with RG 1.21. These procedures are prepared and implemented under the quality assurance program referenced in Chapter 17.

11.5.2.7 Determination of Instrumentation Alarm Setpoints for Effluents

---

CP COL 11.5(2) Replace the second sentence in DCD Subsection 11.5.2.7 with the following.

The methodology for the calculation of the alarm setpoints is part of the ODCM described in Subsection 11.5.2.9.

11.5.2.8 Compliance with Effluent Release Requirements

CP COL 11.5(4)
CP COL 11.5(5)

Replace the last sentence in DCD Subsection 11.5.2.8 with the following.

Site-specific procedures on equipment inspection, calibration, maintenance, and regulated record keeping, which meet the requirements of 10 CFR 20.1301, 10 CFR 20.1302, and 10 CFR 50 Appendix I, are prepared and implemented under the quality assurance program referenced in Chapter 17.

11.5.2.9 Offsite Dose Calculation Manual

Replace the first sentence in DCD Subection 11.5.2.9 with the following.

CP COL 11.5(1)
CP COL 11.5(2)

Fulfillment of the 10 CFR 50 Appendix I guidelines requires effluent monitor data. A description of the monitor controls and the calculation of the monitor setpoints are part of the ODCM. The ODCM also provides the rationale for compliance with the radiological effluent Technical Specifications and for the calculation of appropriate setpoints for effluent monitors. The ODCM follows the guidance of NEI 07-09. The ODCM and radiological effluent Technical Specifications, which reflect the new reactor units, are implemented in accordance with the milestone listed in Table 13.4-201. CPNPP has already had an existing ODCM (Reference 11.5-201) that is to reflect the new reactor units.

11.5.2.10 Radiological Environmental Monitoring Program

CP COL 11.5(3)

Replace the content of DCD Subsection 11.5.2.10 with the following.

CPNPP currently has a radiological environmental monitoring program for CPNPP Units 1 and 2 that is described in the plant Technical Specifications and the existing ODCM. The program for CPNPP Units 3 and 4 is going to be described in the plant Technical Specification of CPNPP Units 3 and 4 and the ODCM, which reflect the new reactor units, is implemented in accordance with the milestone listed in Table 13.4-201. This program measures direct radiation using thermoluminescent dosimeters as well as analyses of samples of the air, water, vegetation, and fauna in the surrounding area. The guidance outlined in NUREG-1301 (Reference 11.5-21) and NUREG-0133 (Reference 11.5-18) is to be used when developing the radiological environmental monitoring program.

11.5.2.11 Site-Specific Cost-Benefit Analysis

CP COL 11.5(6) Replace the content of DCD Subsection 11.5.2.11 with the following.

The results of site-specific cost-benefit analysis are described in Subsections 11.2.1.5 and 11.3.1.5.

11.5.5 Combined License Information

Replace the content of DCD Subsection 11.5.5 with the following.

CP COL 11.5(1) ***11.5(1)*** *Site-specific aspects*

This COL item is addressed in Subsection 11.5.2.9.

CP COL 11.5(2) ***11.5(2)*** *Offsite dose calculation manual*

This COL item is addressed in Subsection 11.5.2.7 and 11.5.2.9.

CP COL 11.5(3) ***11.5(3)*** *Radiological and environmental monitoring program*

This COL item is addressed in Subsection 11.5.2.10.

CP COL 11.5(4) ***11.5(4)*** *Inspection, decontamination, and replacement*

This COL item is addressed in Subsections 11.5.2.6 and 11.5.2.8.

CP COL 11.5(5) ***11.5(5)*** *Analytical procedures*

This COL item is addressed in Subsections 11.5.2.6 and 11.5.2.8.

CP COL 11.5(6) ***11.5(6)*** *The site-specific cost benefit analysis*

This COL item is addressed in Subsection 11.5.2.11.

11.5.6 References

Add the following reference after the last reference in DCD Subsection 11.5.6.

11.5-201 *Offsite Dose Calculation Manual for CPNPP Units 1 & 2*, Revision 26.