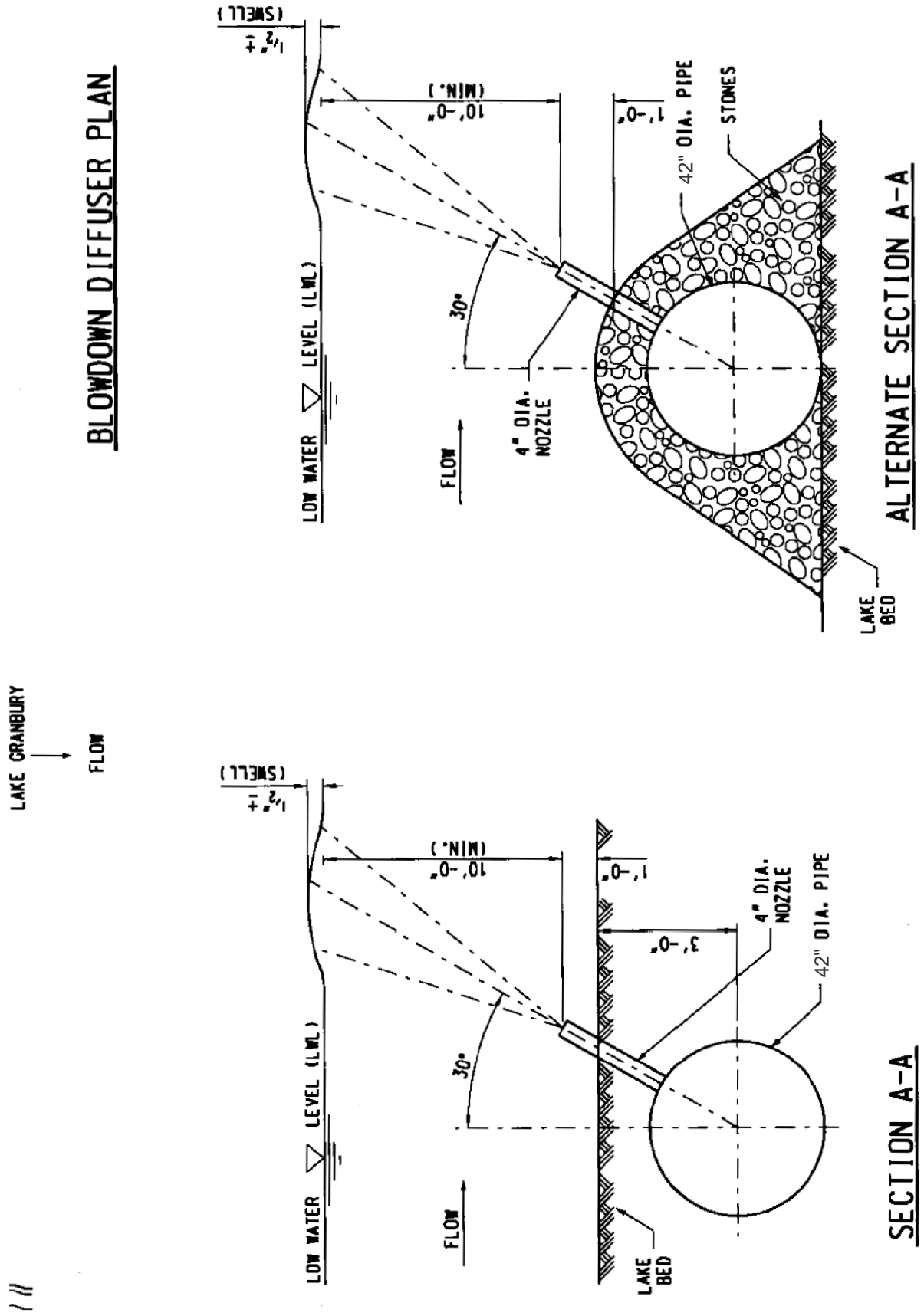

Proposed Multi-Port Diffuser Discharge System FIGURE 9.4-4 Rev 0	COMANCHE PEAK NUCLEAR POWER PLANT UNITS 3 AND 4