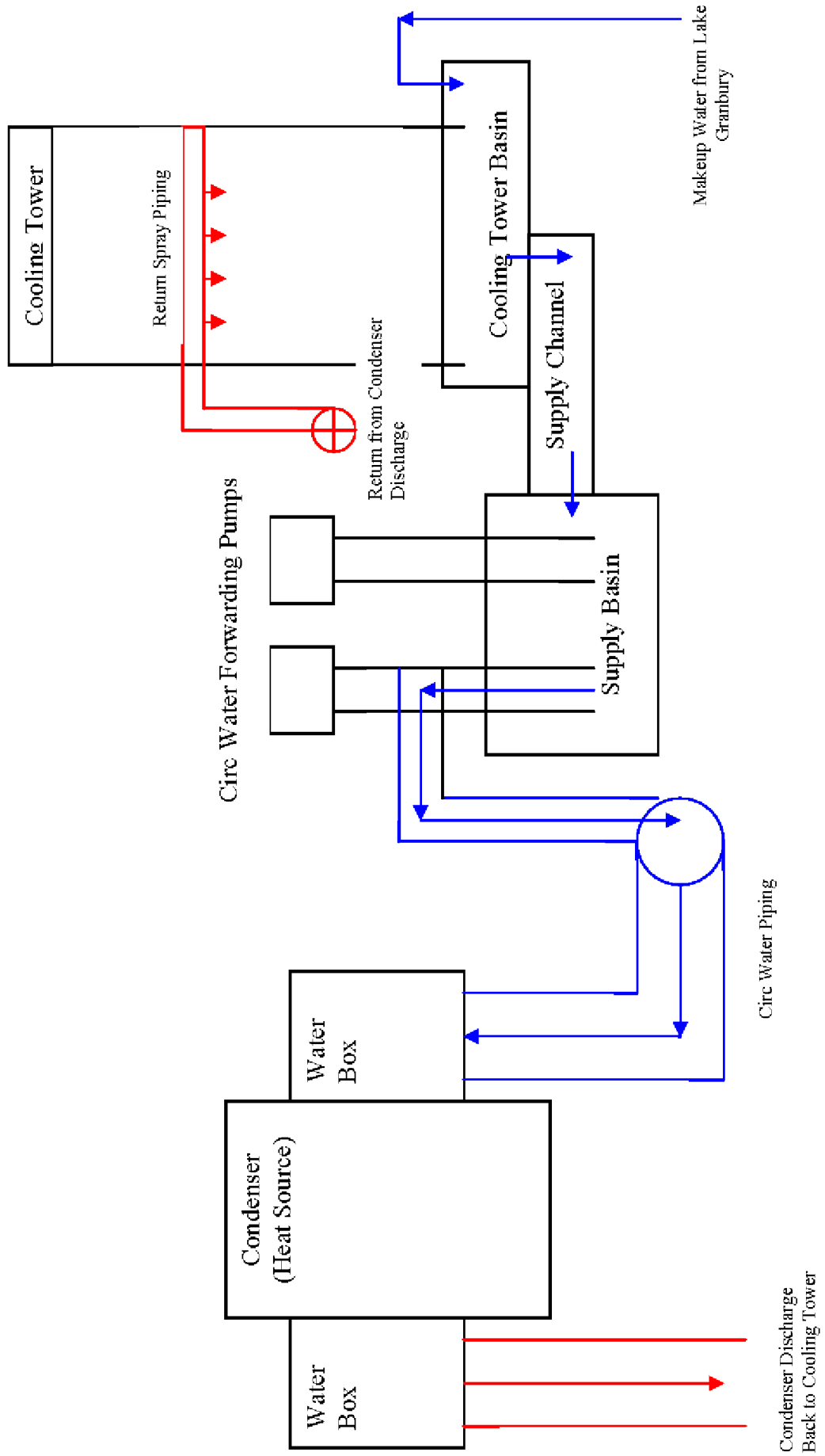

Proposed Cooling Water System
Closed Cycle Mechanical Draft (Wet) Cooling Tower
FIGURE 9.4-3 Rev 0

COMANCHE PEAK NUCLEAR POWER PLANT
UNITS 3 AND 4