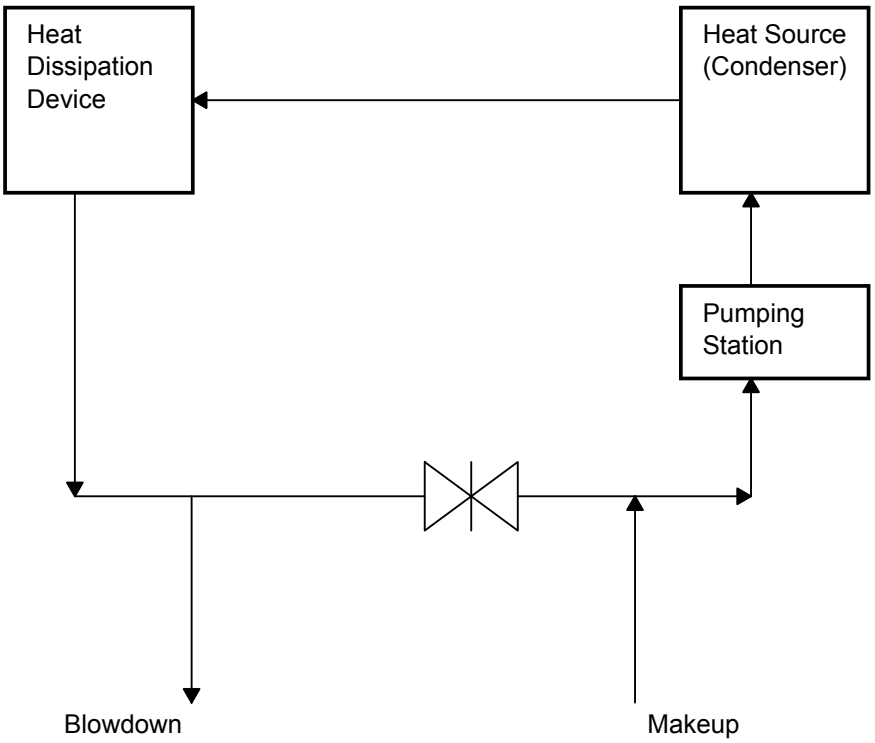

Alternative Cooling System, Typical Closed Cycle System
FIGURE 9.4-1 Rev 0

COMANCHE PEAK NUCLEAR POWER PLANT
UNITS 3 AND 4