U.S.NRC

UNITED STATES NUCLEAR REGULATORY COMMISSION

Protecting People and the Environment

Public Meeting

Draft Test Plan for DC Circuit Testing

September 23, 2008

Presentation of Test Plan – Fire-Induced Failure Modes and Effects Testing of Direct Current Drive Control Circuit Cables

&

Request for Public Comments

Office of Nuclear Regulatory Research

Fire Research Branch

Meeting Topics & Presenters

Introduction

Mark Henry Salley, PE
Fire Research Branch Chief, RES

Test Plan

Harold Barrett, PE
Fire Protection Branch, NRR

Gabriel Taylor
Fire Research Branch, RES

Steven P. Nowlen
Distinguished Member of the Technical Staff
Risk & Reliability Analysis Department
Sandia National Laboratories

Smoke

Jason Dreisbach
Fire Research Branch, RES

Greeting and Introductions

- Slide available online in NRCs ADAMS Accession No. ML082630912
- Category 2
- Agenda for this meeting is attached to the meeting notice posted on the NRCs public website

http://www.nrc.gov/public-involve/public-meetings/index.cfm

Federal Register Notice (FRN)

- Draft Test Plan Issued for Public Comment on September 16, 2008 (73 FR 53452)
- Public comment period closes October 24, 2008
- FRN provides comment submittal process
  - http://www.regulations.gov
  - Search Docket ID # NRC-2008-0505

Draft Test Plan

- Publically Available in ADAMS under Accession No. ML082520518
- Public comments will be resolved and documented
- Test plan should be viewed as “nominal” test set – subject to change based on insights gained as testing progresses

Cooperative Research

- Interested parties may participate in RES program via the Electric Power Research Institute (EPRI).
- NRC/RES can amend its fire addendum to the memorandum of understanding (MOU) with EPRI to include participation roles, and responsibilities with this test program.
- Components and equipment that will add value to this testing program will be addressed during this presentation.

Project Schedule

October 24, 2008 – Public Comment Period Ends

November – Peer-review of Post-Public comment test plan

December – Incorporate peer-review comments and issue test plan final (publicly available)

December – Begin small-scale testing

March ‘09 – Begin intermediate-scale testing

July ’09 – Issue DRAFT report for public comment

September ‘09 – ACRS Review

December ’09 – Submit final NUREG/CR report to publishing

Need for Testing

- DC is used throughout nuclear power plants
- DC is used in many important circuits
  - Both Safety Related and Non-Safety Related
- Fire testing on electrical circuits to date has been almost exclusively performed on AC circuits
- The limited DC testing suggests that DC circuits may not perform the same as AC circuits when damaged by fire

Need for Testing (continued)

- Limited DC testing experience indicates
  - DC Hot short probability may be higher than AC
  - DC Hot short duration may be longer than AC
- In some applications, circuit design may be an important consideration in assessing risk
  - Anti-pump feature of circuit breakers may limit impact of spurious operations

Insights from Duke Energy Tests (2006)

- Duke performed two DC tests
  - One indicated 6 out of 8 possible spurious actuations occurred
  - The other indicated that 5 of 5 that experienced damage had spurious actuations
    - 3 additional could have actuated but were terminated before damage occurred
  - During the second test, several circuits experienced hot shorts of both close and open coils at the same time

Experimental Approach

- Similar approach as was taken for CAROLFIRE Project (2006)
  - NUREG/CR-6931, “Cable Response To Live Fire”
- Small-scale & Intermediate-scale testing will be pursued
- Less emphasis on fire model improvement
- Begin to explore smoke impact on sensitive electrical components

Experimental Approach (continued)

- *Penlight* Apparatus

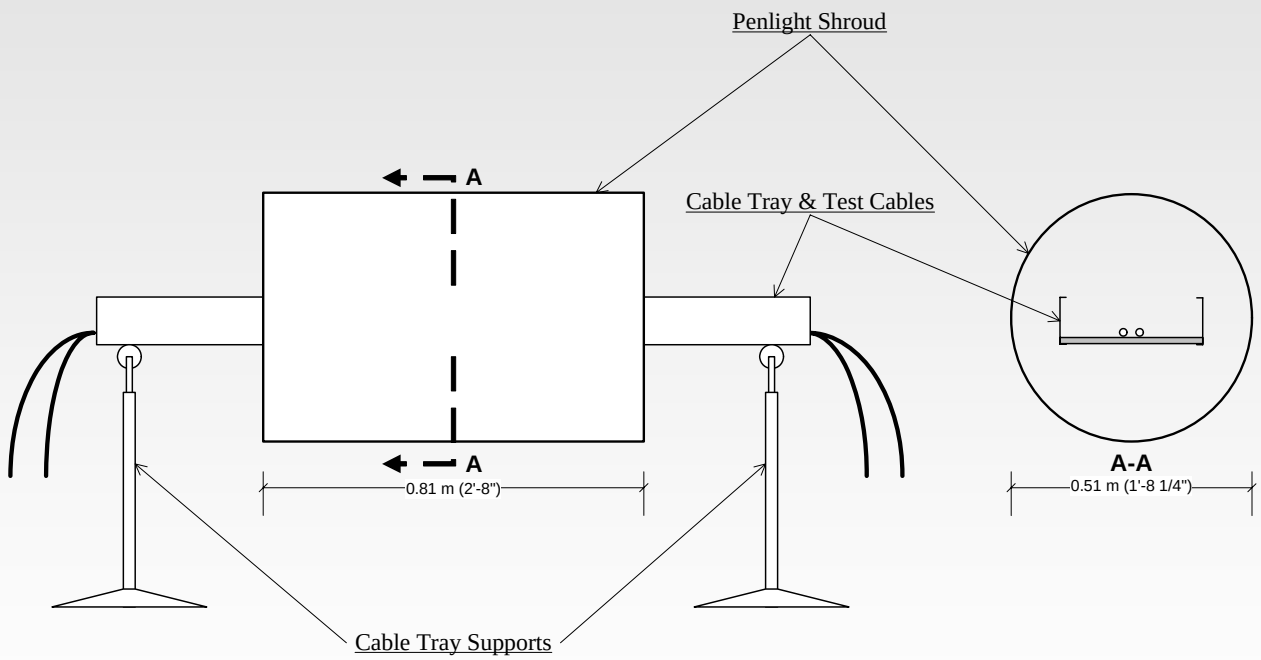

Experimental Approach (continued)

- *Penlight* Apparatus

Experimental Approach (continued)

- Small-scale testing using *Penlight*
  - Apparatus allows for variable heat flux
    - Control cable failure time in the 10-30 minute range
    - 5.9kW/m^2 (325 ºC) up to 26.9kW/m^2 (600 ºC)
      - Heat exposure consummate with cable type (TS higher then TP)
    - Well defined and controlled thermal exposure
  - Efficient
    - 2-3 tests can be run a day
    - Allows for early indication on circuit response
  - Limited by
    - Amount of combustible material placed within shroud
    - Largely radiant heat exposure

Experimental Approach (continued)

- Intermediate-scale

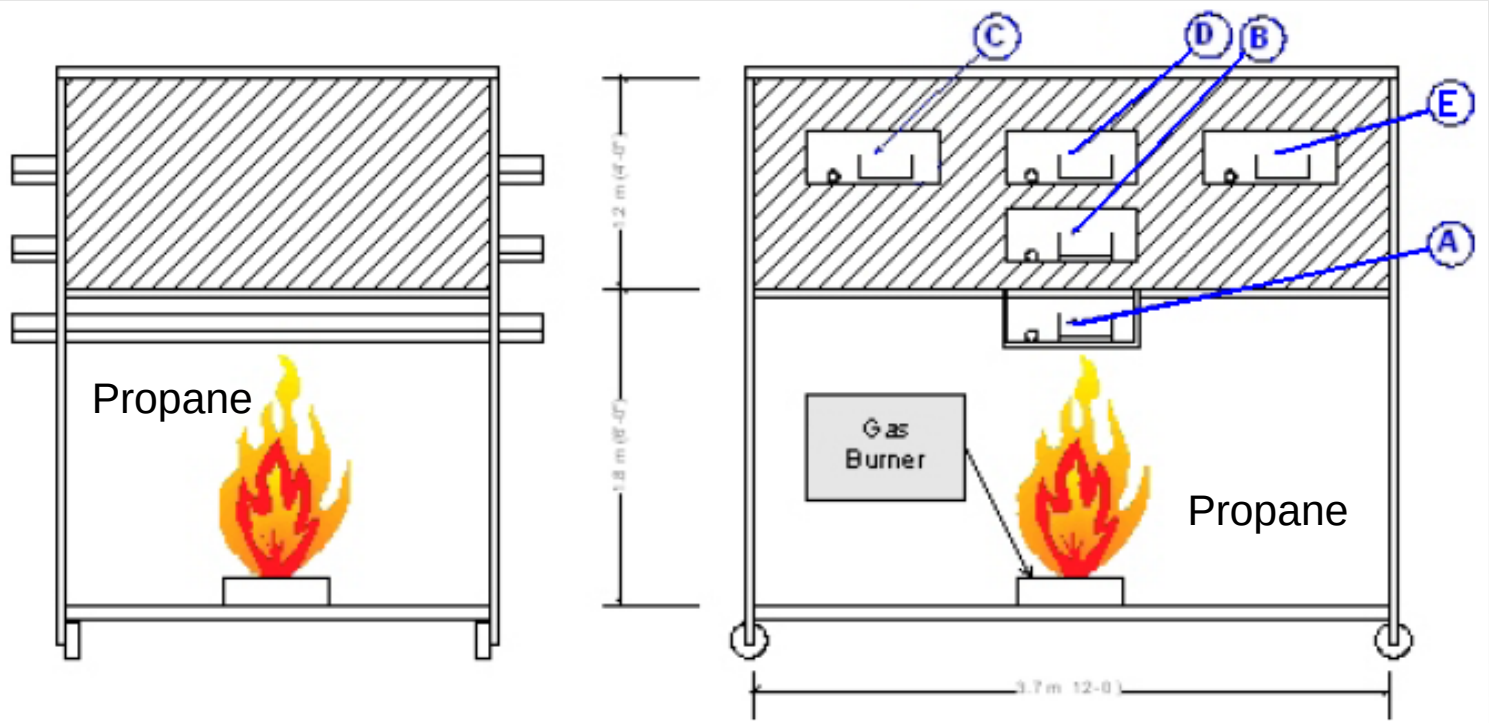

Experimental Approach (continued)

- Intermediate-scale
  - Apparatus provides realistic fire conditions
    - Hood sized same as ASTM E603 Standard Test Room
    - Flame region, plume, hot gas layer
    - 200 kW nominal Heat Release Rate (HRR)
      - Preliminary tests will allow for adjustments in heat exposure to achieve desired cable failure times (10-30 minutes)
    - Propane gas will be fuel source (C_3H_6)
  - Large amount of cable can be used, if desired
    - Full cable trays, full conduits
  - All circuit monitoring systems can be used in one test
  - Limited by
    - At most 1 test per day
    - Not well characterized heat exposure
    - Room size results in slow response for calorimeter calculations

Test Matrix

Penlight

	Insulation type										Exposure shroud temperature													
	Thermosets			Thermoplastics			TS/TP	Cable item #	Bundle size		Thermoplastic levels			Thermoset Levels			Raceway type		Cable Diagnostic System					
Test #	XLPE / CSPE	EPR	SR	Tefzel	PE/PVC	PVC/PVC	XLPE/PVC		1	3	300	325	400	470	525	700	Tray	Conduit	IRMS (DC)	Pilot solenoid valve	4kV Breaker	PORV	Motor Starter	Instrument Loop
1	X								X					X			X		X					
2	X								X						X		X		X					
3	X								X					X			X			X				
4	X								X						X		X			X				
5	X								X					X			X				X			
6	X								X						X		X				X			
7	X								X					X			X					X		
8	X								X						X		X					X		
9	X								X					X			X						X	
10	X								X						X		X						X	
11					X				X			X					X		X					
12					X				X			X					X			X				
13					X				X			X					X				X			
14					X				X			X					X					X		
15					X				X			X					X						X	
16		X							X					X			X				X			
17			X						X							X	X				X			
18				X					X				X				X				X			
19						X			X			X					X				X			
20							X		X					X			X				X			
21	XX				X					X					X		X		X	X		X		
22	XX				X					X					X		X		X		X		X	
23	X	XX								X					X		X		X	X		X		
24				X	X	X				X			X				X		X		X		X	
25	X								X					X			X							X
26	X								X					X			X							X
27						X			X			X					X							X
28						X			X			X					X							X
29	X								X					X				X	X					
30	X								X					X				X		X				
31	X								X					X				X			X			
32	X								X					X				X				X		
33	X								X					X				X					X	
34					X				X			X						X	X					
35					X				X			X						X		X				
36					X				X			X						X			X			
37					X				X			X						X				X		
38					X				X			X						X					X	
39		X							X					X				X			X			
40			X						X							X		X			X			
41				X					X				X					X			X			
42						X			X			X						X			X			
43							X		X					X				X			X			
44	XX				X					X					X			X	X	X		X		
45	XX				X					X					X			X	X		X		X	
46	X								X					X				X						X
47	X								X					X				X						X
48						X			X			X						X						X
49						X			X			X						X						X

Test Matrix

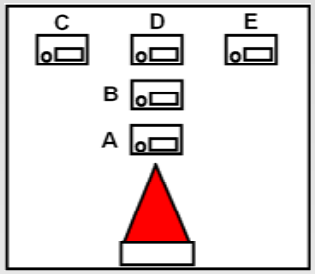

Intermediate Scale Test Matrix - Revision A (8-22-2008)

Comments:

1) All tests were conducted as open burns with a Propene (Propylene) gas sand burner
2) Conductor Size for the all the proposed experiments is 12 AWG

Burn Test #	Loc.	Cable Insulation Material							Number of Conductors		Cable Bundle Size					Water Spary Options	Raceway Type	
		Thermoset			Thermoplastic			TS/TP										
		XLPE	EPR	Silicone	PE	PVC	Tefzel	TS/TP	3	7	1	3	6	12	Load Tr	*	12" Tray	2.5" Cnd
Prelim 1	A	X							X		X						X	
	A	X								X	X							X
Prelim 2	A	X							X		X							X
	A	X								X	X						X	
Prelim 3	A					X			X		X						X	
	A					X				X	X							X
Prelim 4	A					X			X		X							X
	A					X				X	X						X	
1	A	X								X					X		X	
	B	X								X				X			X	
	C	X								X		X						X
	D	X								X		X						X
	E	X								X				X			X	
2	A	X								X				X			X	
	B	X								X			X				X	
	A	X			X					X				X			X	
	B	X			X					X			X				X	
	C					X				X	X						X	
	E					X				X	X						X	
3	A	X	X							X			X				X	
	B	X	X							X			X				X	
	A		X		X					X			X				X	
	B		X		X					X			X				X	
	C					X			X		X						X	
	E					X			X		X						X	

Cable Selection

- Majority of testing will use cables procured for the CAROLFIRE Project
  - Cable voltage rating appropriate for DC circuits to be tested
- Focus on seven conductor (7/C) control cables
  - 7/C is considered typical for Nuclear Power Plant (NPP) applications
- 12-14 AWG[1] conductor size
  - Typical conductor size for 125Vdc & 250Vdc control circuits

[1] AWG stands for American Wire Gauge

Thermoset Cable Selection

- Core Thermoset Cable
  - XLPE insulted / CSPE (Hypalon) jacketed
    - XLPE : Cross-linked Polyethylene
    - CSPE : Chlorosulphonated Polyethylene
- Other Thermoset (TS) cables include:
  - Ethylene Propylene Rubber (EPR)
  - Silicon Rubber

Thermoplastic Cable Selection

- Core Thermoplastic Cable
  - PE insulated / PVC jacketed
    - PE : Polyethylene
    - PVC : Polyvinyl Chloride
- Other Thermoplastic cables include
  - Tefzel 280 insulated / 200 jacketed
  - PVC/PVC
- One Mixed Cable will be included in limited number of tests
  - XLPE insulated / PVC jacketed

Other Cables

- Armored Control Cables
  - Tests performed by Duke Energy involving armored control cables indicated irregular circuit failure results
  - More testing needed to better understand phenomena
  - Armored control cable desired for testing
- Kerite FR
  - Thermoset (TS) that responds similar to a Themoplastic (TP)
  - EQ testing provided conflicting results on the thermal robustness
  - Vintage Kerite (New Old-Stock (NOS), i.e., bought in 70's never used)

Cable Selection

Other Thermosets
2 – EPR/CSPE
9 – SR/Aramid Braid

Core TS
10 - XLPE/CSPE

Core TP
15 – PE/PVC

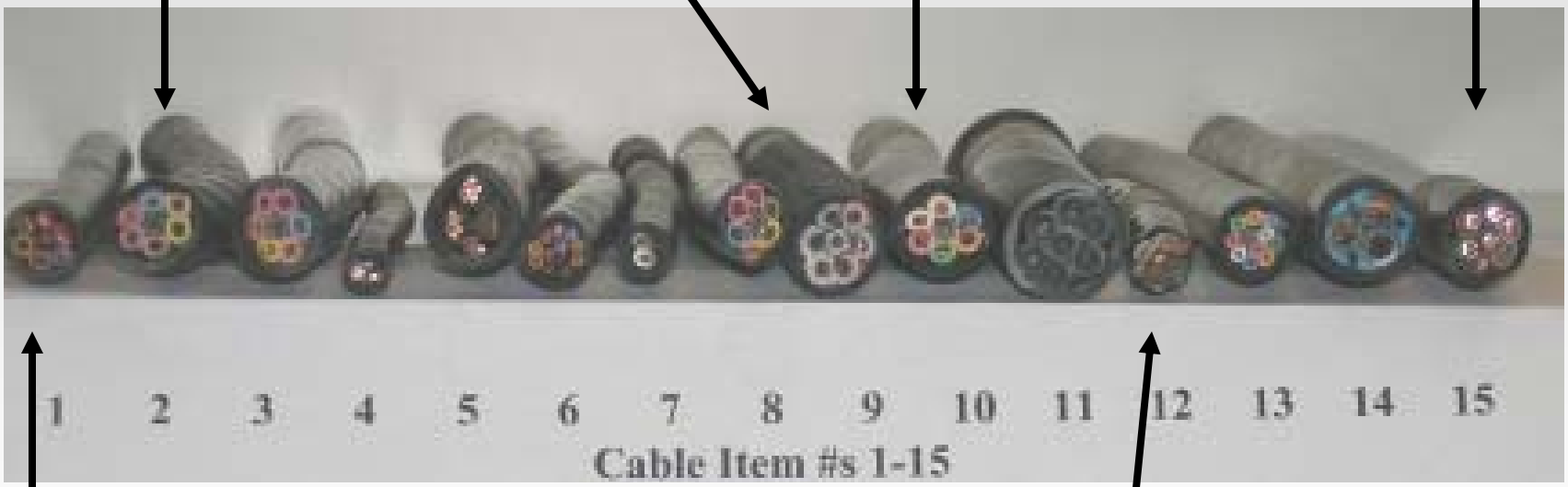

Other Thermoplastics
12 – Tef(280)/Tef(200)
1 – PVC/PVC

Armored Cable

Tested by Duke Energy

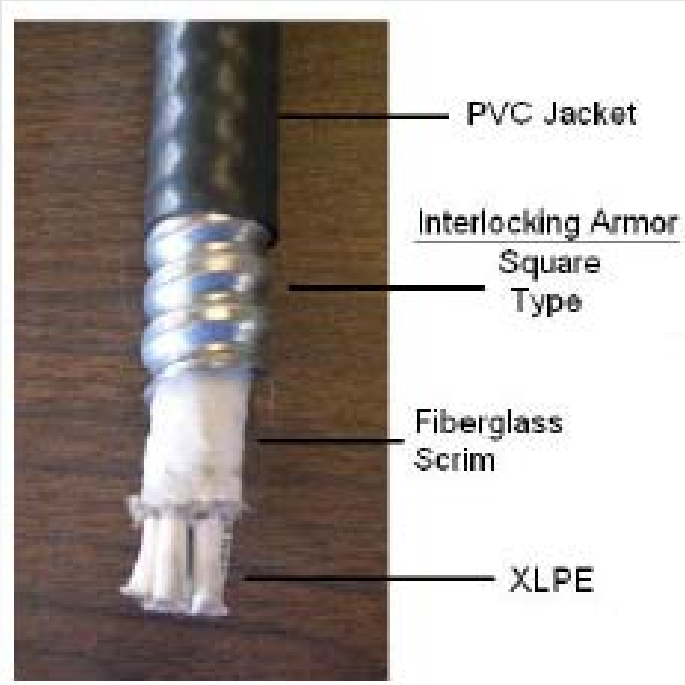

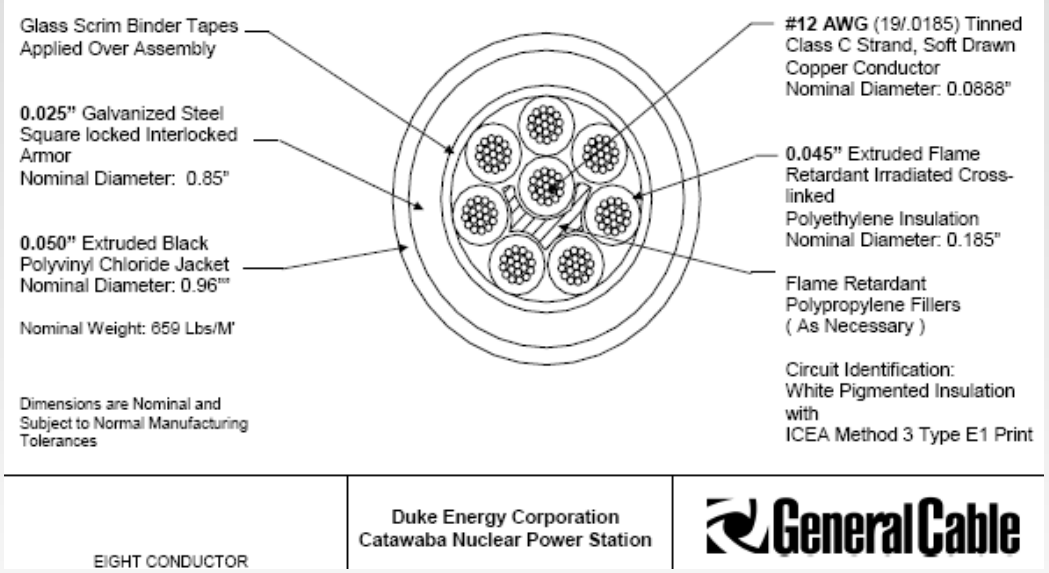

Thermal Response

- DC testing program is opportunity to collect cable thermal response data
- Similar approach to what was done in CAROLFIRE
  - Except less thermal instrumentation density in DC testing

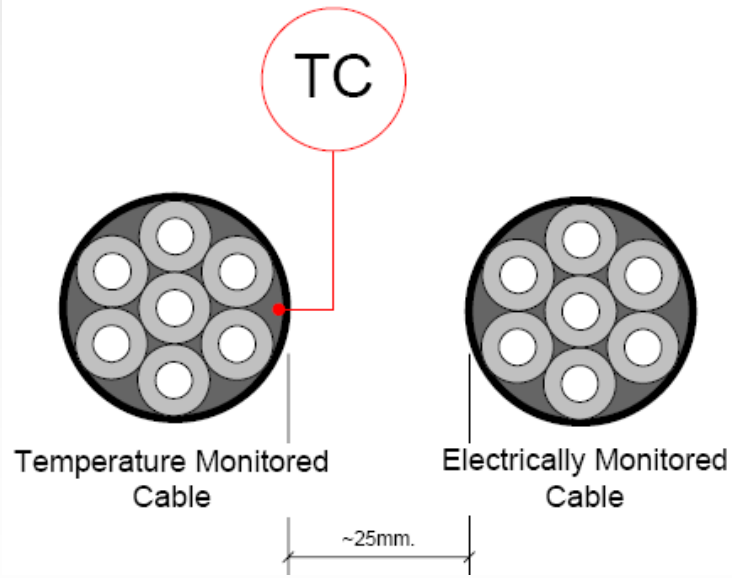

Thermal Response Uncertainty

- Cables monitored for electrical response cannot be monitored for thermal response
  - Would result in experimentally induced failure mode
- Separate cables will be used to collect thermal data
- Limited number of *Penlight* tests will be thermal response comparison tests
  - address the uncertainty associated with using separate cables to indicate failure temperature of electrically instrumented cables

Thermal Comparison Tests

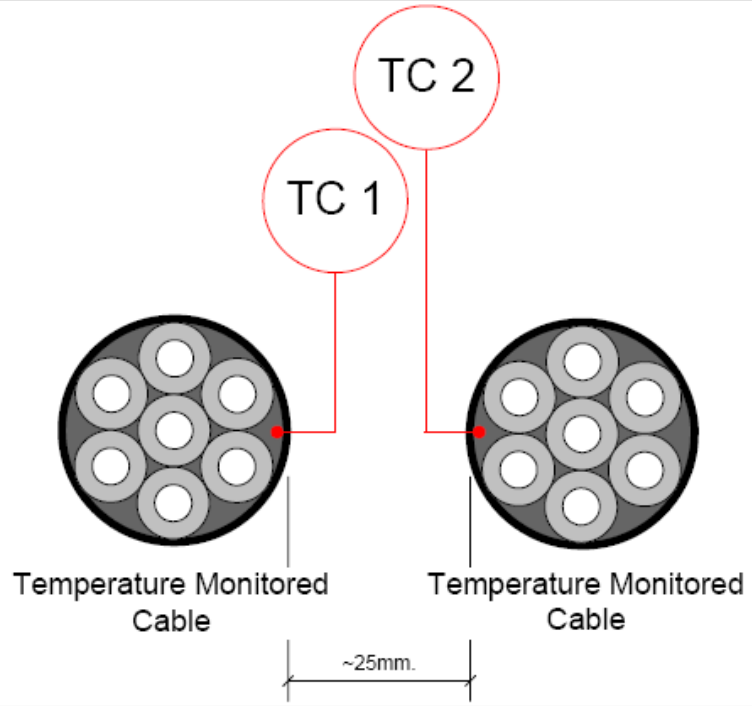

Public Comment Period

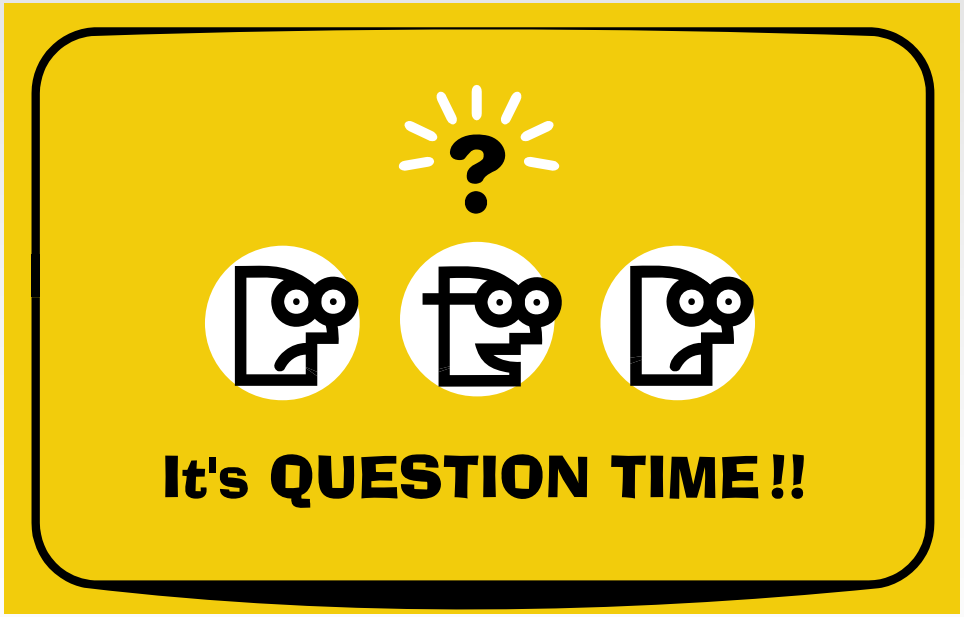

Electrical Response

- Two (2) types of electrical monitoring systems will be used
  - Circuit simulator (i.e., surrogate circuits)
  - DC IRMS (Insulation Resistance Measuring System)
- Both systems will be used in *Penlight* and Intermediate-scale testing

Electrical Response DC IRMS

- Sequentially applies low power dc voltage signals to individual conductors and monitors other conductors for leakage current
- Set of equations derived from Ohms law allow for calculation of insulation resistance between conductor-to-conductor and conductor-to-ground

DC IRMS

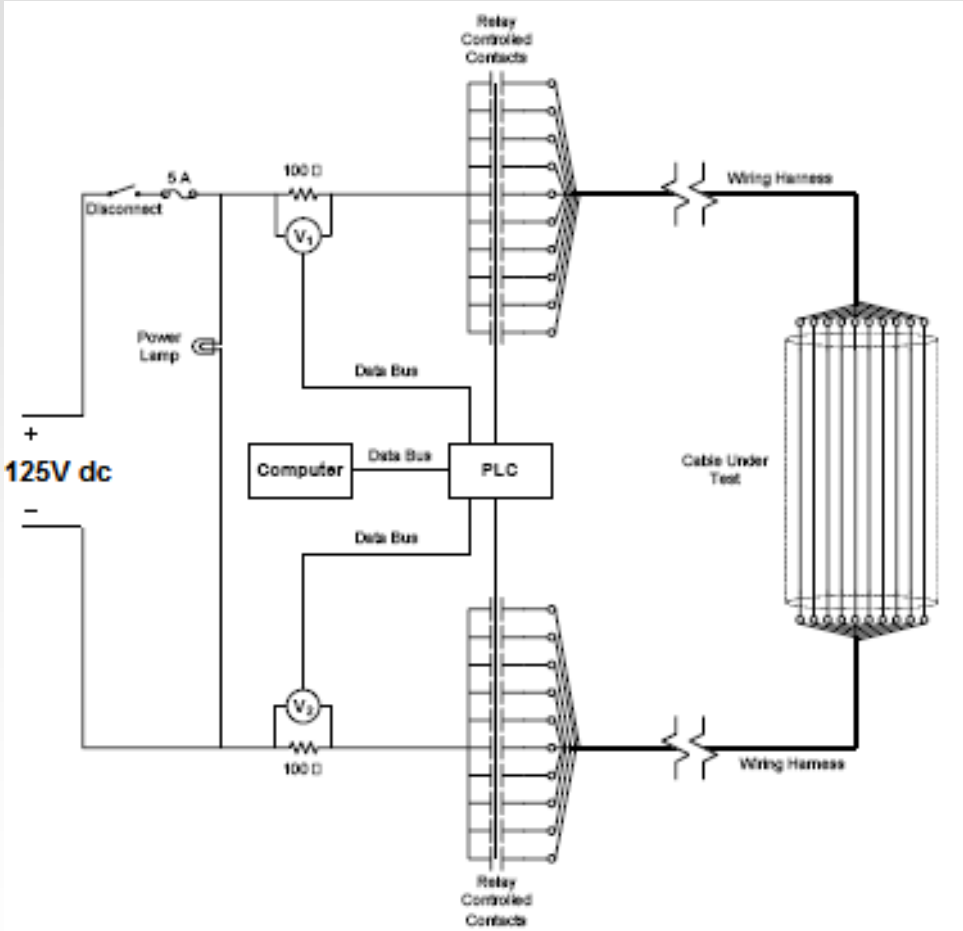
Relay Controlled Contacts
5 A
Disconnect
100 Ω
V_1
Wiring Harness
Power Lamp
Data Bus
+
125V dc
–
Computer
Data Bus
PLC
Cable Under Test
Data Bus
V_2
100 Ω
Wiring Harness
Relay Controlled Contacts

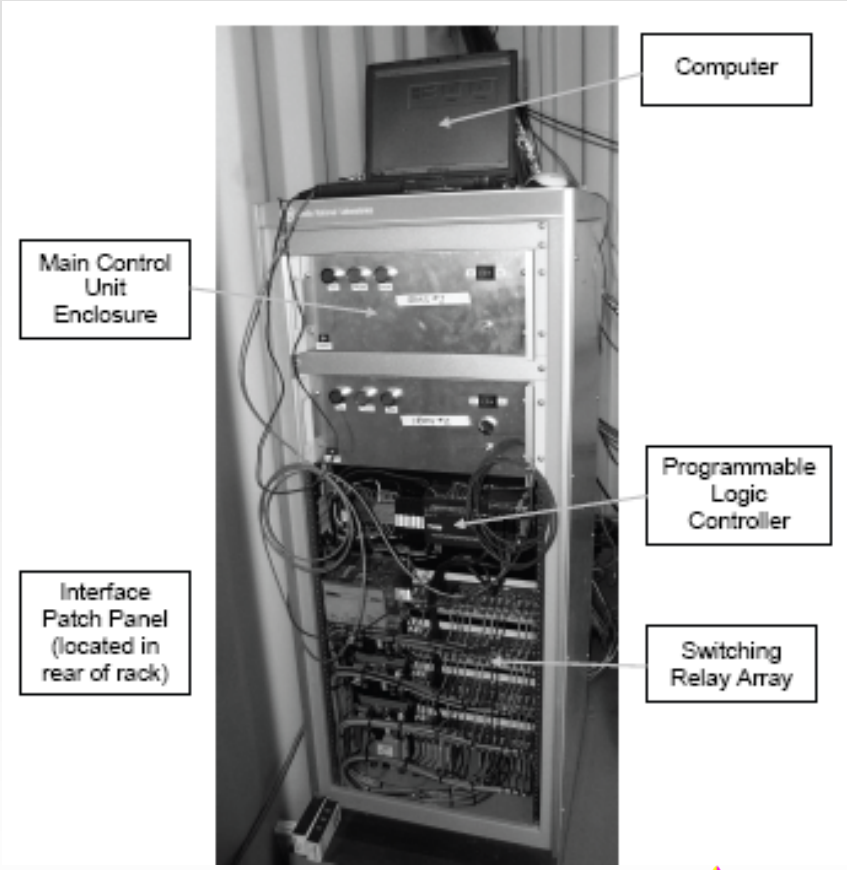
Computer
Main Control Unit Enclosure
Programmable Logic Controller
Interface Patch Panel (located in rear of rack)
Switching Relay Array

IRMS Results

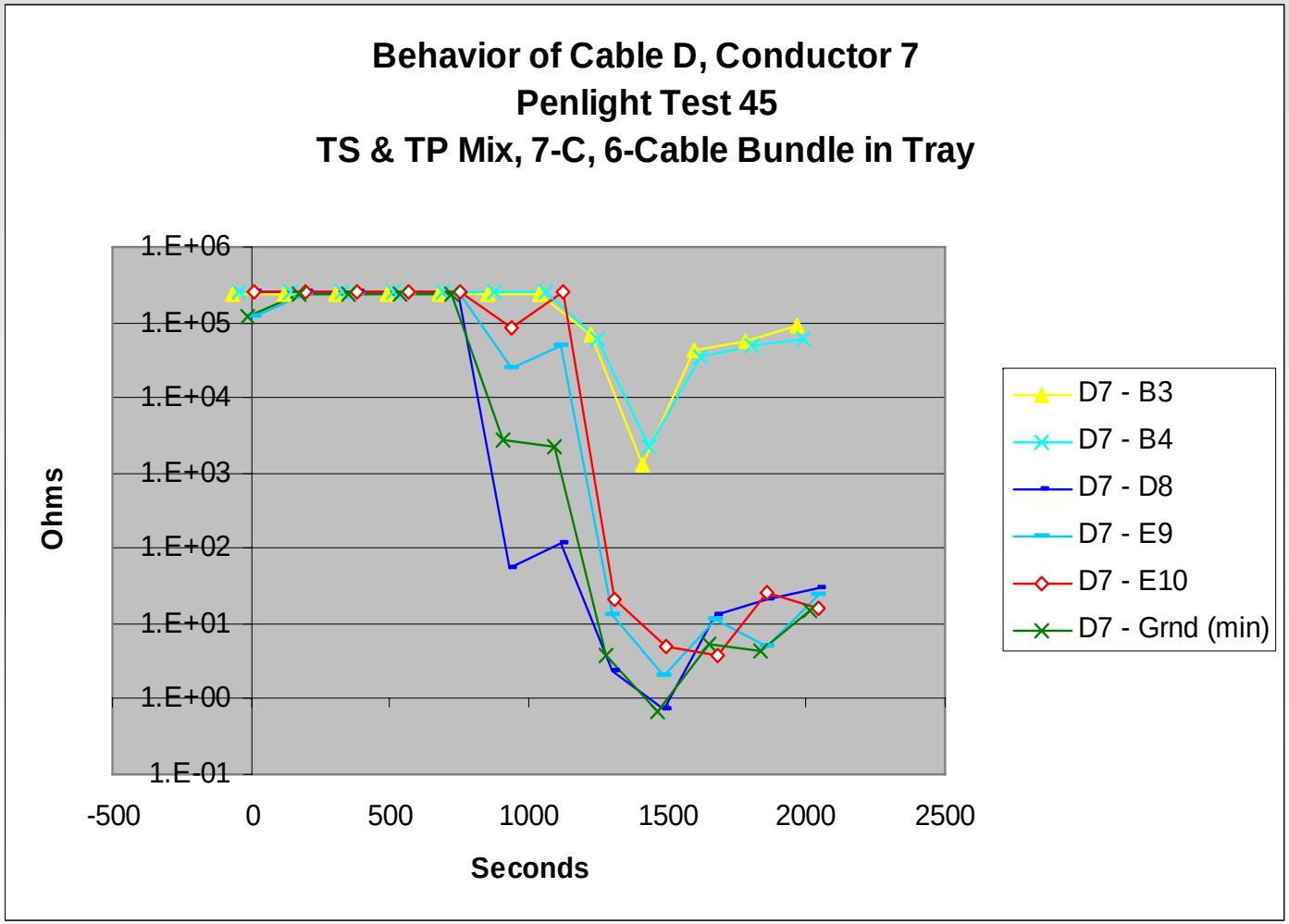

DC Control Circuits

- Five (5) different types of dc circuits
  - Small solenoid operated valve (SOV) used to operate air operated valve (AOV)
  - Large PORV coil
  - Control circuit for 4160Vac Circuit Breaker
  - DC Motor Starter Circuit
  - Instrumentation Loop (4-20mA)
- Circuits will be simulated via a DC Control Circuit Simulator (DCCCS)
- DCCCS will be UNGROUNDED, unless otherwise noted.

Appendix C
DC MOV

- DC MOV DCCCS is similar to AC Surrogate Circuit Diagnostic Unit (SCDU).
  - Two (2) source conductors
  - Two (2) active targets
  - One (1) passive target
  - One (1) common return path, simulate powered indication lamp (via 1750 W resistor)
  - One (1) spare
- Difference: DC motor starter instead of AC
- Electrical and mechanical interlocks

U.S.NRC
UNITED STATES NUCLEAR REGULATORY COMMISSION
Protecting People and the Environment

Appendix C
DC MOV

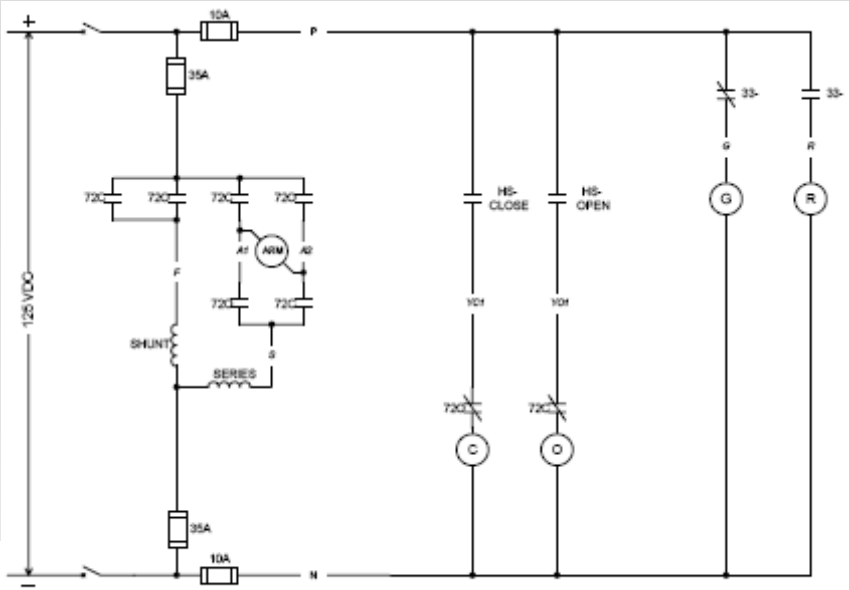

Figure 9: Electrical Schematic Diagram of a Typical DC Motor Operated Value (MOV)

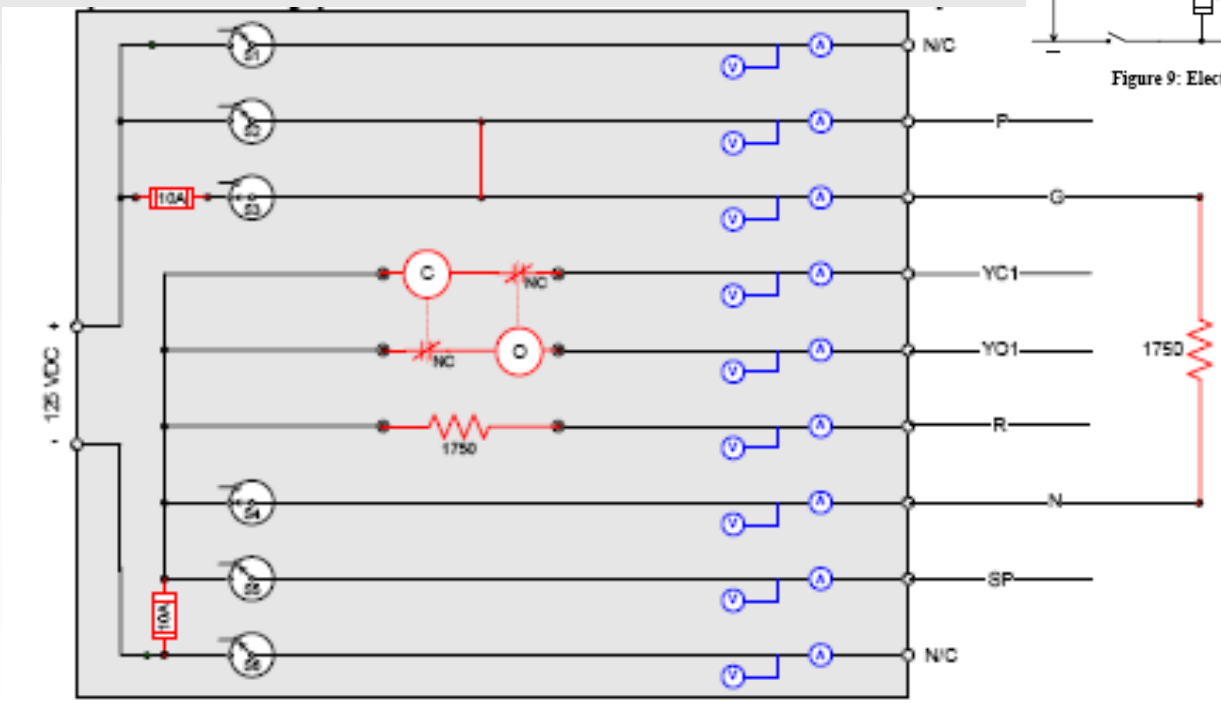

Figure 11: DCCCS layout for the control circuit on a DC MOV.

Office of Nuclear Regulatory Research

Fire Research Branch

Appendix D - 4kV Circuit Breaker Control Circuit

- Fire-Induced spurious actuation of control cable conductors could cause a breaker to trip open or closed.
  - These interactions could cause equipment to start or stop unexpectedly
- Evaluation of 4160V CBs with anti-pumping circuitry may indicate lower probabilities of prolonged spurious actuations.
  - Anti-pump circuits act to lock out equipment operation when repetitive trip/close demands occur
- 1-2 tests will involve a 4kV CB circuit with a double break design

4kV Circuit Breakers

(Continued)

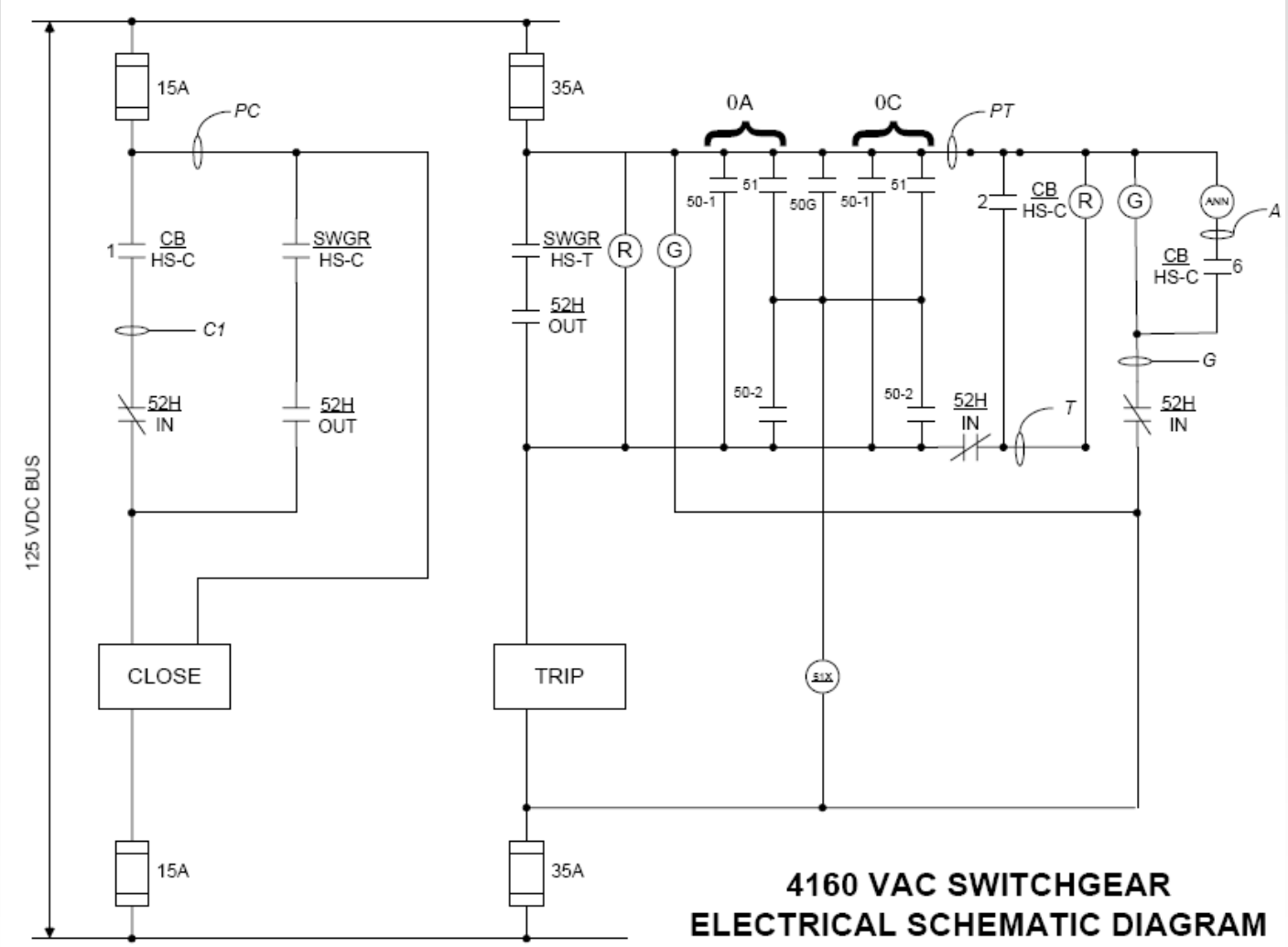

4kV Circuit Breakers

(Continued)

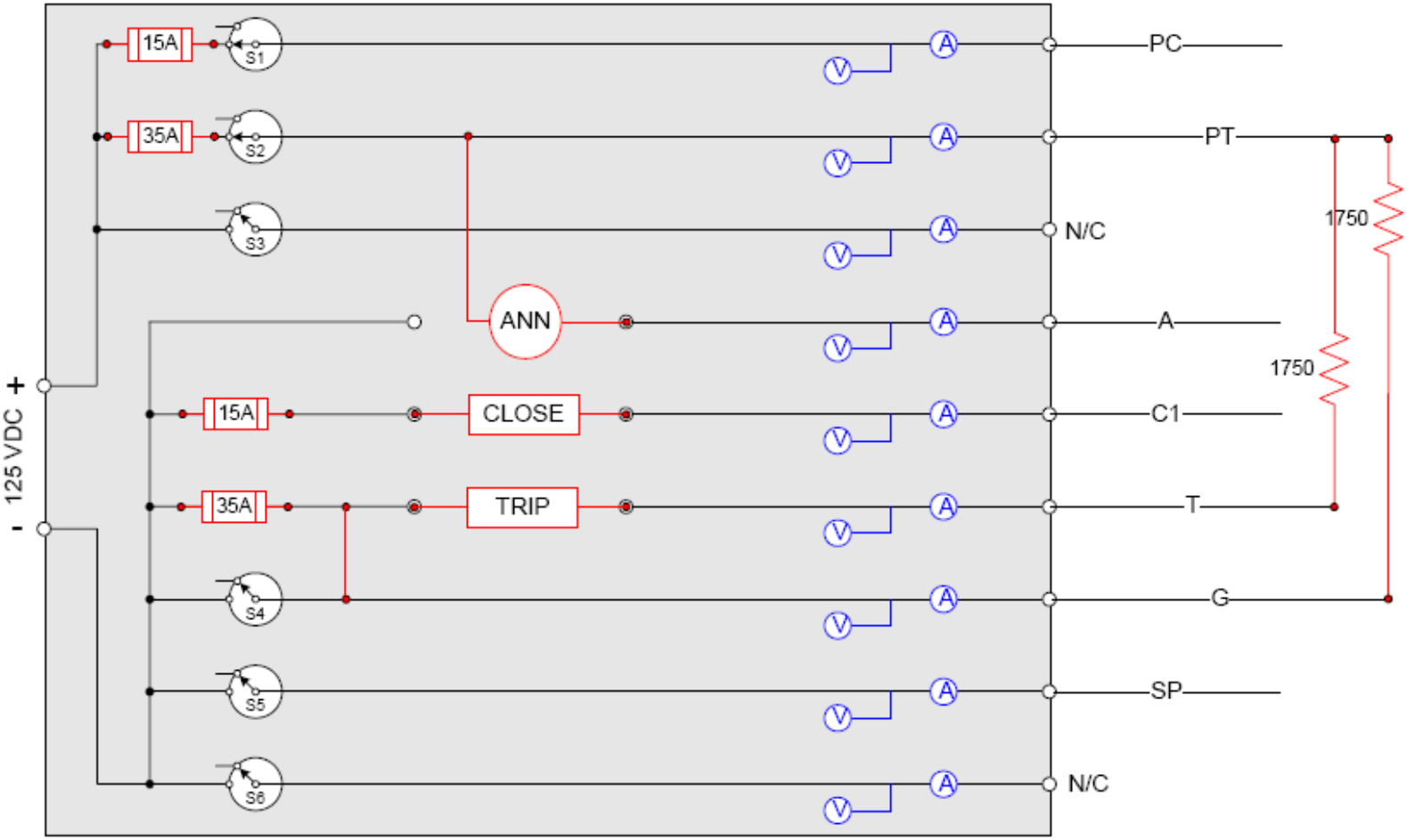

Figure 15: DCCCS Layout for the control circuit on a typical 4160 VAC switchgear

4160Vac CB's of Interest

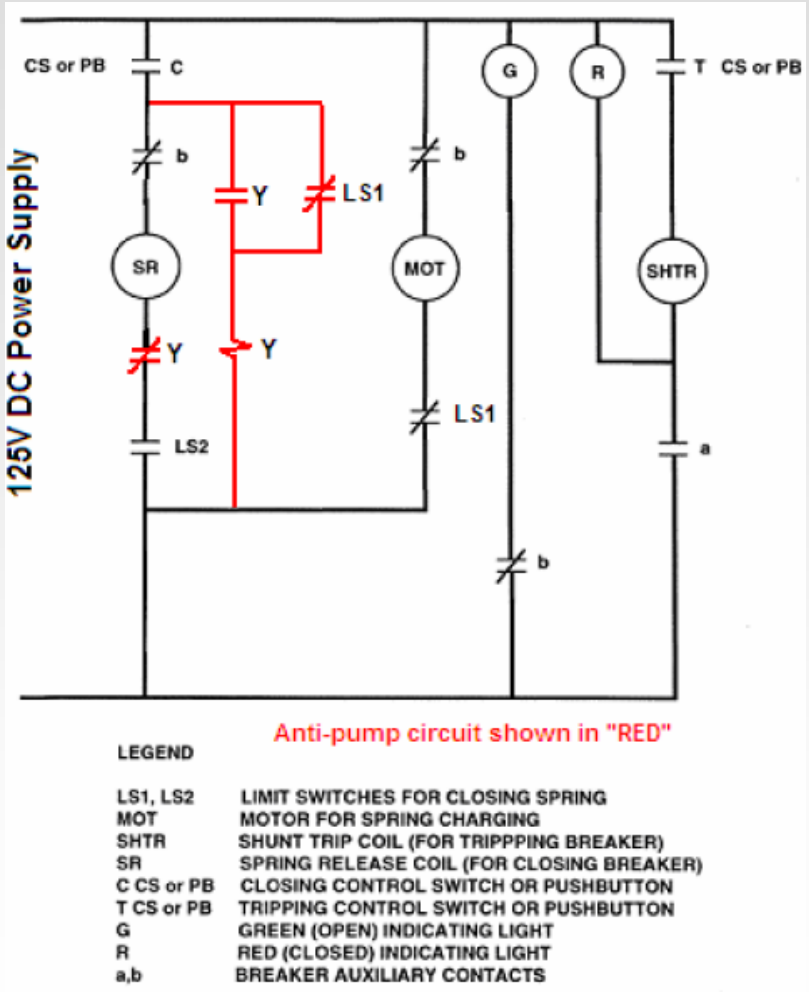

Figure 12: 4.16kV Circuit Breaker Schematic

- Anti-pumping circuit
  - GE Magna-blast
  - Allis-Chalmers
  - I-T-E
  - Westinghouse
  - ABB

U.S.NRC
UNITED STATES NUCLEAR REGULATORY COMMISSION
Protecting People and the Environment

Appendix E
Pilot SOV

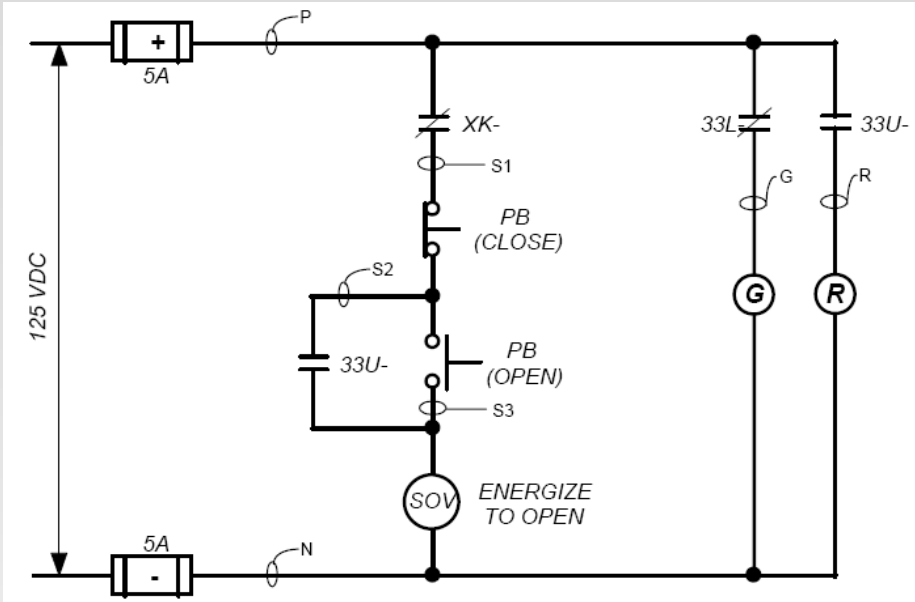

Figure 16: Electrical Schematic Diagram for a Small Solenoid Operated Valve

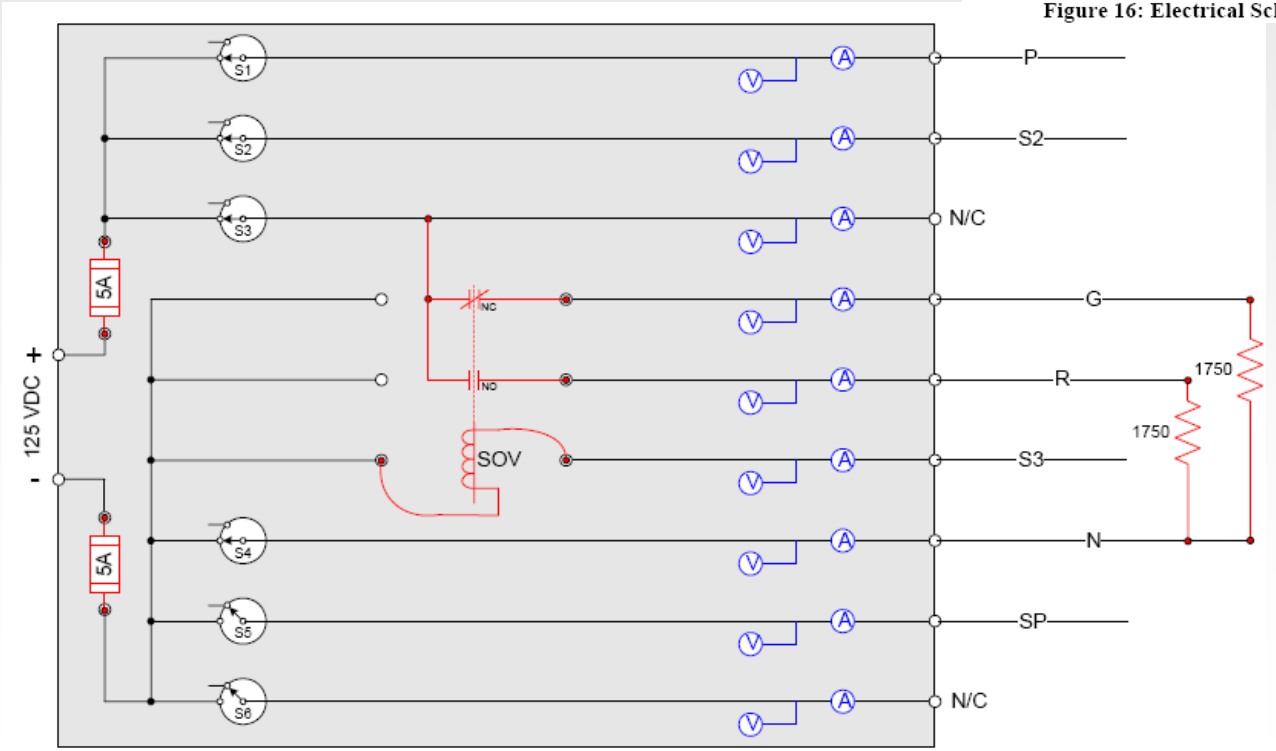

Figure 18: DCCCS Layout for a Small SOV DC Circuit

Fire Research Branch

Appendix E
Pilot SOV

- SOV assumed normally closed position, hot short could cause valve to spuriously open
  - Two (2) source conductors
  - One (1) active target → SOV coil
  - Two (2) source/target used for indication
    - interlock ensures there will always be one source and one target
  - One (1) common return path
  - One (1) spare
- Unlike MOV circuits, de-energizing (clearing of spurious actuation) will cause valve to reposition to fail safe position (typically closed)

Appendix F
Power Operated Relief Valve (PORV) Circuit

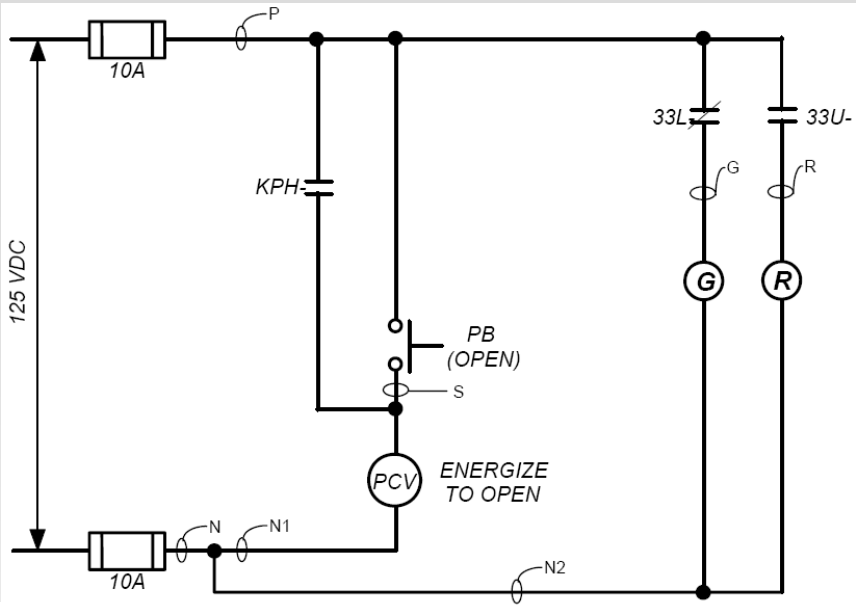

Figure 19: Electrical Schematic Diagram of a Typical Power Operated Valve (PORV)

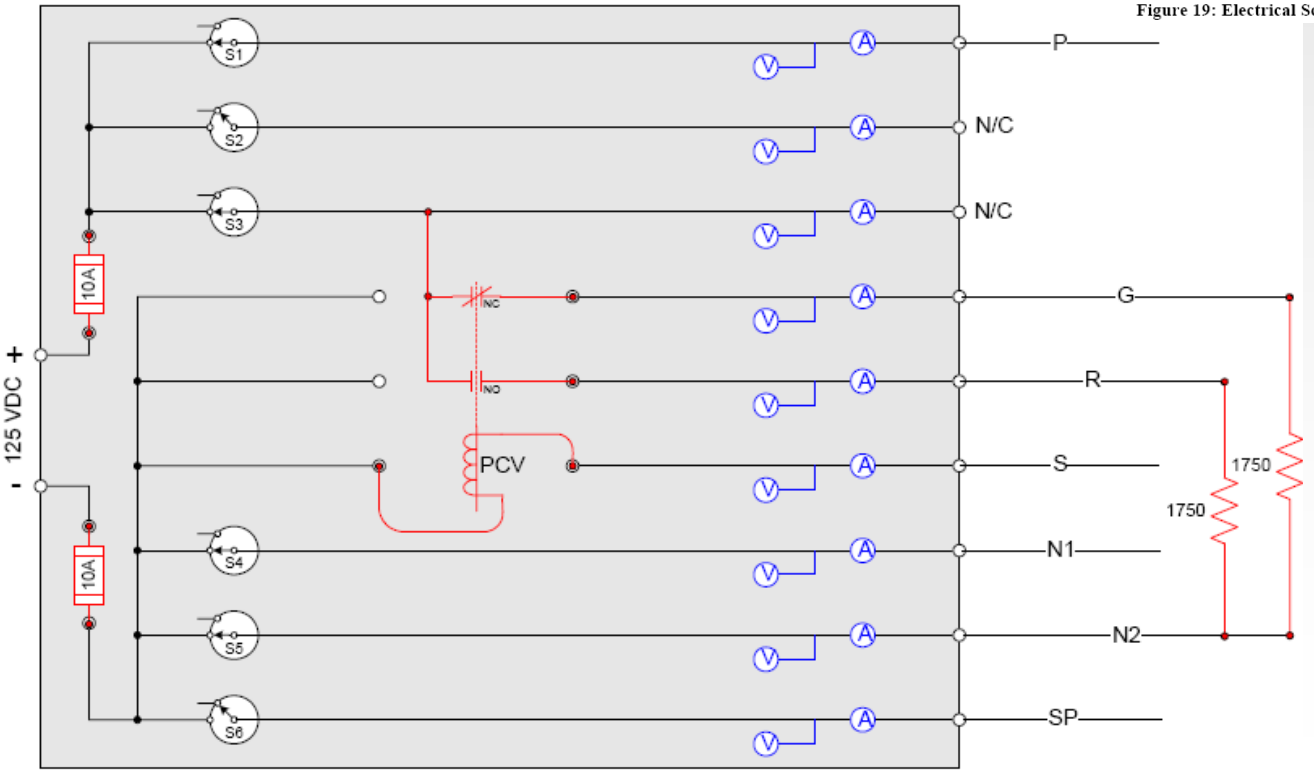

Figure 21: DCCCS Layout of a Typical DC Power Operated Valve (PORV)

Appendix F
PORV Circuit

- PORV circuit similar to pilot SOV circuit, just larger
- PORVs provided important function
  - Maintain pressure of the reactor coolant boundary below specific limits
- PORV have larger probabilities of remaining open after being energized
  - Therefore, PORVs carry higher risk of not properly re-seating after actuation
- PORV DCCCS will have
  - One (1) source
  - Two (2) source/targets (indication paths)
  - One (1) active target
  - Two (2) common return paths
  - One (1) spare

Appendix G Instrumentation Circuit

- NEI/EPRI Fire-Induced Circuit Testing (2001)
  - Four (4) tests included instrumentation circuits to evaluate response
  - Distinctive differences between thermoset and thermoplastic failure modes
  - Limited number of instrument circuit tests to better understand failure modes of instrument circuits
  - Results documented in NUREG/CR-6776

Instrumentation Circuit

- Current plan is to use a voltage monitored resistive network and constant current source (10-20mA) to record current loss.
- Interested in developing other “simple” ways to test instrumentation circuits
  - Any suggestions?
- Twisted-pair, 16-18AWG, shielded cables
- 1 – thermoplastic; 1 – thermoset

Instrument Circuit

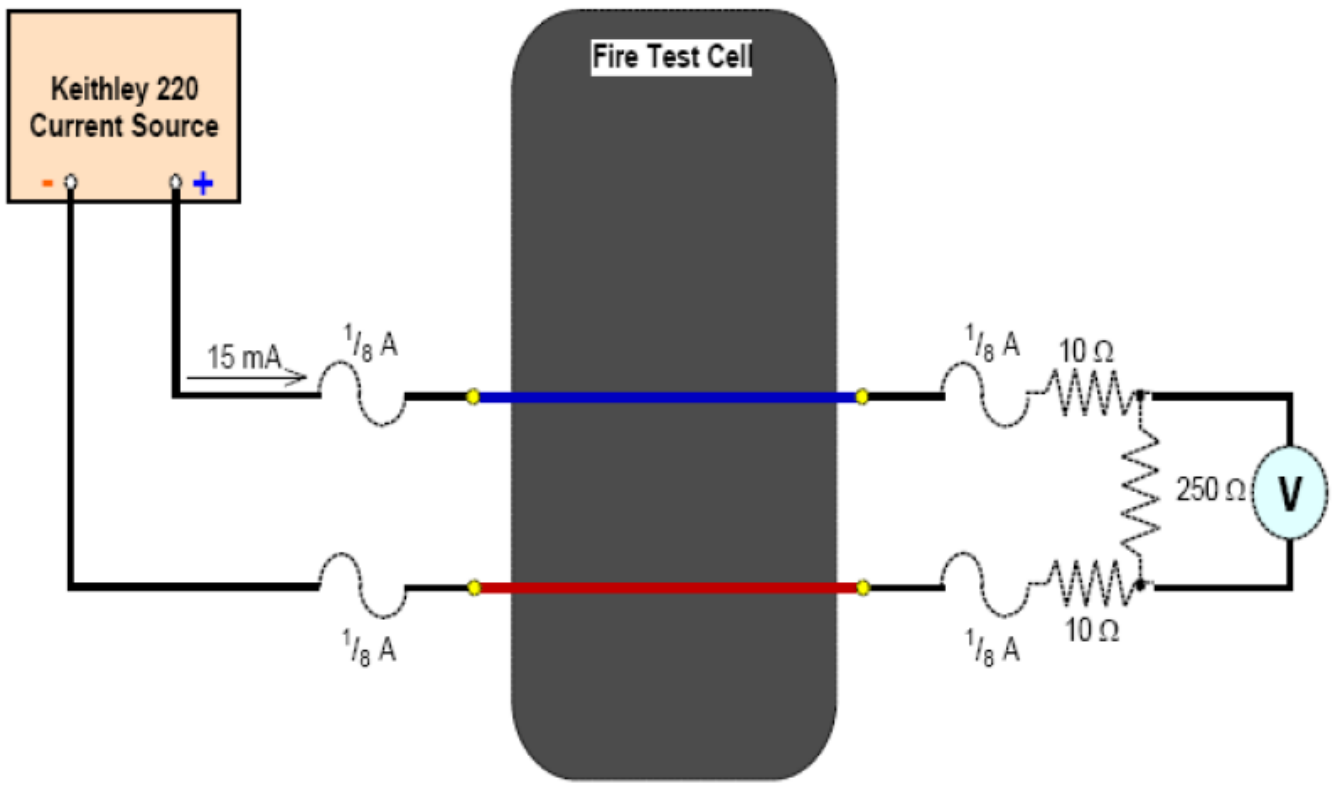

Figure 25: Schematic Representation of the Instrument Loop Mock-Up

AC MOV

- CAROLFIRE program provided results for resolution of RIS 2004-03 Bin 2 Items & fire model improvements
- An oversight of proper AC MOV actuators resulted in a deviation from the desired testing objective of determining CPT effects on spurious actuation liklihood
- DC Testing plan allows for opportunity to address issue

CAROLFIRE SCDU AC MOV

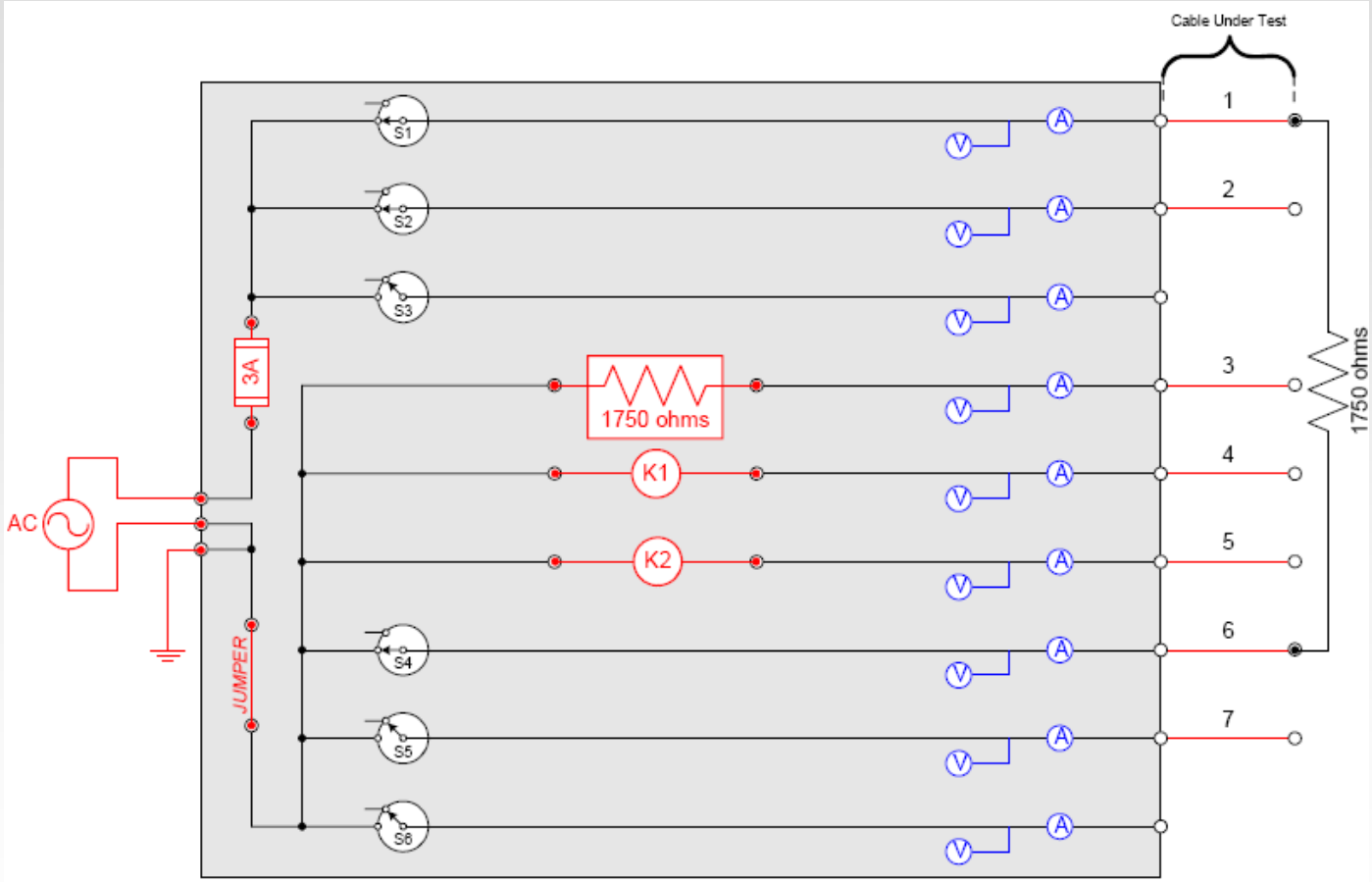

Figure 7: Simulated AC Motor Operated Valve Control Circuit, Without CPT.

Similar to DC MOV

- Two (2) source
- One (1) spare
- One (1) Common Return
- Two (2) active targets
- One (1) passive target

Smoke

- Possible approach to understand the effect of smoke on electrical equipment.
- Electrical Equipment
- Smoke Equipment

Summary

- Accelerated schedule to support NFPA 805 transition plants
- Thorough public and peer review of test plan
- Cooperative Research Participation through EPRI
- Public comment period of Draft Test Plan will end October 24, 2008

EPRI stand for the Electric Power Research Institute

U.S.NRC
UNITED STATES NUCLEAR REGULATORY COMMISSION
Protecting People and the Environment

Questions?

Office of Nuclear Regulatory Research

Fire Research Branch