DESIGN CONTROL DOCUMENT FOR THE
US-APWR
Chapter 5
Reactor Coolant and Connecting Systems

MUAP- DC005
REVISION 1
AUGUST 2008

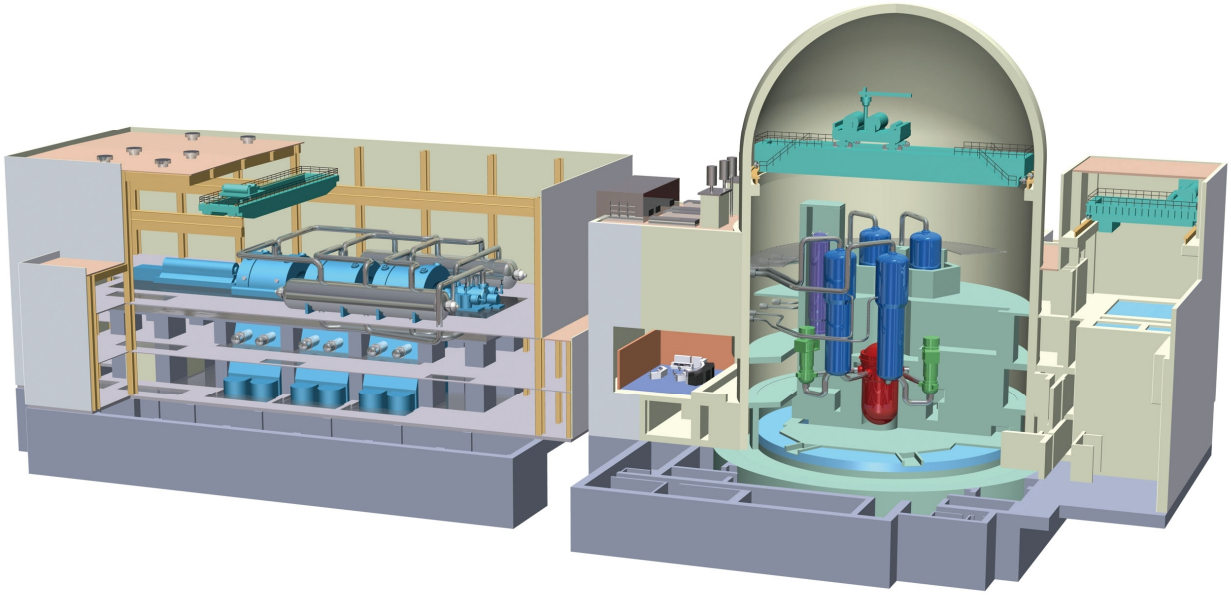

MITSUBISHI HEAVY INDUSTRIES, LTD.

©2008
Mitsubishi Heavy Industries, Ltd.
All Rights Reserved

© 2008

MITSUBISHI HEAVY INDUSTRIES, LTD.

All Rights Reserved

This document has been prepared by Mitsubishi Heavy Industries, Ltd. ("MHI") in connection with the U.S. Nuclear Regulatory Commission's ("NRC") licensing review of MHI's US-APWR nuclear power plant design. No right to disclose, use or copy any of the information in this document, other than by the NRC and its contractors in support of the licensing review of the US-APWR, is authorized without the express written permission of MHI.

This document contains technology information and intellectual property relating to the US-APWR and it is delivered to the NRC on the express condition that it not be disclosed, copied or reproduced in whole or in part, or used for the benefit of anyone other than MHI without the express written permission of MHI, except as set forth in the previous paragraph.

This document is protected by the laws of Japan, U.S. copyright law, international treaties and conventions, and the applicable laws of any country where it is being used.

Mitsubishi Heavy Industries, Ltd.

16-5, Konan 2-chome, Minato-ku

Tokyo 108-8215 Japan

CONTENTS

Page

5.0 REACTOR COOLANT AND CONNECTING SYSTEMS.....5.1-1

5.1 Summary Description.....5.1-1

5.1.1 Schematic Flow Diagrams.....5.1-3

5.1.2 Piping and Instrumentation Schematics.....5.1-4

5.1.3 Elevation Drawing.....5.1-5

5.1.4 Combined License Information.....5.1-5

5.1.5 References.....5.1-5

5.2 Integrity of Reactor Coolant Pressure Boundary.....5.2-1

5.2.1 Compliance with Codes and Code Cases.....5.2-1

5.2.1.1 Compliance with 10 CFR 50, Section 50.55a.....5.2-1

5.2.1.2 Compliance with Applicable Code Cases.....5.2-2

5.2.2 Overpressure Protection.....5.2-5

5.2.2.1 Design Bases.....5.2-5

5.2.2.2 Design Evaluation.....5.2-8

5.2.2.3 Piping and Instrumentation Diagrams.....5.2-10

5.2.2.4 Equipment and Component Description.....5.2-10

5.2.2.5 Mounting of Pressure Relief Devices.....5.2-10

5.2.2.6 Applicable Codes and Classification.....5.2-10

5.2.2.7 Material Specifications.....5.2-11

5.2.2.8 Process Instrumentation.....5.2-11

5.2.2.9 System Reliability.....5.2-11

5.2.2.10 Testing and Inspection.....5.2-11

5.2.3 Reactor Coolant Pressure Boundary Materials.....5.2-15

5.2.3.1 Material Specifications 5.2-15

5.2.3.2 Compatibility with Reactor Coolant 5.2-16

5.2.3.3 Fabrication and Processing of Ferritic Materials 5.2-18

5.2.3.4 Fabrication and Processing of Austenitic Stainless Steels 5.2-20

5.2.3.5 Prevention of Primary Water Stress Corrosion Cracking (PWSCC) for Nickel-Base Alloys 5.2-23

5.2.3.6 Threaded Fasteners 5.2-23

5.2.4 Inservice Inspection and Testing of the RCPB 5.2-31

5.2.4.1 Inservice Inspection and Testing Program 5.2-31

5.2.4.2 Preservice Inspection and Testing Program 5.2-34

5.2.5 Reactor Coolant Pressure Boundary (RCPB) Leakage Detection 5.2-35

5.2.5.1 Design Bases 5.2-35

5.2.5.2 Classification of Leakage 5.2-35

5.2.5.3 Detection of Identified Leakage 5.2-35

5.2.5.4 Detection of Unidentified Leakage 5.2-37

5.2.5.5 Safety Evaluation 5.2-40

5.2.5.6 Instrumentation Applications 5.2-40

5.2.5.7 Testing, Calibration and Inspection Requirements 5.2-41

5.2.5.8 Limits for Reactor Coolant Leakage Rates within the RCPB 5.2-41

5.2.6 Combined License Information 5.2-42

5.2.7 References 5.2-43

5.3 Reactor Vessel 5.3-1

5.3.1 Reactor Vessel Materials 5.3-1

5.3.1.1 Material Specifications 5.3-1

5.3.1.2 Special Processes Used for Manufacturing and Fabrication 5.3-2

5.3.1.3 Special Methods for Nondestructive Examination 5.3-3

5.3.1.4 Special Controls for Ferritic and Austenitic Stainless Steels.....5.3-4

5.3.1.5 Fracture Toughness.....5.3-6

5.3.1.6 Material Surveillance.....5.3-7

5.3.1.7 Reactor Vessel Fasteners.....5.3-10

5.3.2 Pressure-Temperature Limits, Pressurized Thermal Shock, and Charpy Upper Shelf Energy Data and Analyses 5.3-11

5.3.2.1 Limit Curves 5.3-12

5.3.2.2 Operating Procedures.....5.3-17

5.3.2.3 Pressurized Thermal Shock.....5.3-17

5.3.2.4 Upper Shelf Energy.....5.3-17

5.3.3 Reactor Vessel Integrity 5.3-18

5.3.3.1 Design.....5.3-18

5.3.3.2 Materials of Construction 5.3-22

5.3.3.3 Fabrication Methods.....5.3-22

5.3.3.4 Inspection Requirements 5.3-23

5.3.3.5 Shipment and Installation.....5.3-23

5.3.3.6 Operating Conditions 5.3-23

5.3.3.7 Inservice Surveillance 5.3-24

5.3.3.8 Threaded Fasteners.....5.3-26

5.3.4 Combined License Information.....5.3-27

5.3.5 References 5.3-27

5.4 Reactor Coolant System Component and Subsystem Design.....5.4-1

5.4.1 Reactor Coolant Pumps 5.4-1

5.4.1.1 Pump Flywheel Integrity.....5.4-1

5.4.1.2 Reactor Coolant Pump Design Bases.....5.4-2

5.4.1.3 Pump Assembly Description 5.4-2

5.4.1.4 Design Evaluation 5.4-4
5.4.1.5 Tests and Inspections 5.4-7
5.4.2 Steam Generators 5.4-12
5.4.2.1 Steam Generator Materials 5.4-12
5.4.2.2 Steam Generator Program 5.4-18
5.4.3 Reactor Coolant Piping 5.4-27
5.4.3.1 Design Bases 5.4-27
5.4.3.2 Design Description 5.4-27
5.4.3.3 Design Evaluation 5.4-29
5.4.3.4 Material Corrosion/Erosion Evaluation 5.4-29
5.4.3.5 Test and Inspections 5.4-29
5.4.4 Main Steam Line Flow Restrictor 5.4-34
5.4.4.1 Design Bases 5.4-34
5.4.4.2 Design Description 5.4-34
5.4.4.3 Design Evaluation 5.4-34
5.4.5 Reserved by NRC as per RG 1.206 ..... 5.4-35
5.4.6 Reactor Core Isolation Cooling System 5.4-35
5.4.7 Residual Heat Removal System 5.4-35
5.4.7.1 Design Bases 5.4-35
5.4.7.2 System Design 5.4-37
5.4.7.3 Performance Evaluation 5.4-47
5.4.8 Reactor Water Cleanup System 5.4-69
5.4.9 Reserved by NRC as per RG 1.206 ..... 5.4-69
5.4.10 Pressurizer 5.4-69
5.4.10.1 Design Bases 5.4-69

5.4.10.2 System Description 5.4-70
5.4.10.3 Performance Evaluation 5.4-72
5.4.10.4 Tests and Inspections 5.4-73
5.4.11 Pressurizer Relief Tank 5.4-81
5.4.11.1 Design Bases 5.4-81
5.4.11.2 System Description 5.4-81
5.4.11.3 Performance Evaluation 5.4-82
5.4.11.4 Instrumentation Requirements 5.4-82
5.4.12 Reactor Coolant System High Point Vents 5.4-86
5.4.12.1 Design Bases 5.4-86
5.4.12.2 System Design 5.4-86
5.4.12.3 Performance Evaluation 5.4-88
5.4.12.4 Inspection and Testing Requirements 5.4-90
5.4.12.5 Instrumentation Requirements 5.4-90
5.4.13 Combined License Information 5.4-92
5.4.14 References 5.4-92

TABLES

Page

Table 5.1-1 Reactor Coolant System Design and Operating Parameters 5.1-6

Table 5.1-2 Principal System Pressure, Temperature and Flow Rates Under Normal Steady-State Full Power Operating Conditions.....5.1-8

Table 5.1-3 Thermal-Hydraulic Parameter 5.1-10

Table 5.2.1-1 Applicable Code Addenda for RCS Class 1 Components.....5.2-3

Table 5.2.1-2 ASME Code Cases.....5.2-4

Table 5.2.2-1 Pressurizer Safety Valve Design Data 5.2-12

Table 5.2.2-2 CS/RHRS Pump Suction Relief Valve Design Data 5.2-13

Table 5.2.3-1 Reactor Coolant Pressure Boundary Material Specifications.....5.2-25

Table 5.2.3-2 Recommended Reactor Coolant Water Chemistry Specification 5.2-29

Table 5.3-1 Chemical Composition Requirements for Reactor Vessel Materials 5.3-30

Table 5.3-2 Inspection Plan for Reactor Vessel Materials.....5.3-31

Table 5.3-3 Inspection Plan for Reactor Vessel Welds 5.3-32

Table 5.3-4 End-of Life RT_{NDT} and USE for Beltline Materials.....5.3-33

Table 5.3-5 Reactor Vessel Design Data 5.3-34

Table 5.4.1-1 Reactor Coolant Pump Design Data 5.4-9

Table 5.4.1-2 Tests and Inspections of the Reactor Coolant Pump Materials.....5.4-10

Table 5.4.2-1 Steam Generator Design Data 5.4-22

Table 5.4.2-2 Tests and Inspections of the Steam Generator Materials 5.4-23

Table 5.4.2-3 Corrosion Allowances of Steam Generator Materials.....5.4-24

Table 5.4.3-1 Reactor Coolant Piping Design Parameters.....5.4-31

Table 5.4.3-2 Tests and Inspections of the Reactor Coolant Piping Materials 5.4-32

Table 5.4.3-3 Inspection Plan for Reactor Coolant Piping Joints 5.4-32

Table 5.4.7-1 Failure Modes and Effect Analysis 5.4-50

Table 5.4.7-2 Equipment Design Parameters 5.4-57

Table 5.4.10-1 Pressurizer Design Data 5.4-75

Table 5.4.10-2 Pressurizer Heater Group Parameters 5.4-76

Table 5.4.10-3 Reactor Coolant System Design Pressure Settings 5.4-77

Table 5.4.10-4 Tests and Inspections of the Pressurizer Materials 5.4-78

Table 5.4.10-5 Tests and Inspections of the Pressurizer Weld Joints 5.4-79

Table 5.4.11-1 Pressurizer Relief Tank Design Data 5.4-83

Table 5.4.11-2 Discharges to the Pressurizer Relief Tank 5.4-84

Table 5.4.12-1 Reactor vessel head vent Design Parameters 5.4-91

Table 5.4.12-2 Safety Depressurization Valve Design Parameters 5.4-91

Table 5.4.12-3 Depressurization Valve Design Parameters 5.4-91

FIGURES

Page

Figure 5.1-1 Reactor Coolant System Schematic Flow diagram 5.1-11

Figure 5.1-2 Reactor Coolant System Piping and Instrumentation Diagram 5.1-12

Figure 5.1-3 Reactor Coolant System Loop Layout 5.1-15

Figure 5.1-4 Reactor Coolant System-Elevation.....5.1-16

Figure 5.2.2-1 Mounting of the pressurizer safety valves 5.2-14

Figure 5.2.3-1 Lithium Control Band 5.2-30

Figure 5.3-1 Orientation of Surveillance Capsules 5.3-35

Figure 5.3-2 Representative P-T Limit Curve for Heatup up to 60EFPY 5.3-36

Figure 5.3-3 Representative P-T Limit Curve for Cooldown up to 60EFPY.....5.3-36

Figure 5.3-4 Reactor Vessel Side View 5.3-37

Figure 5.3-5 Reactor Vessel Cross-Sectional View at Inlet and Outlet Nozzle Center 5.3-38

Figure 5.4.1-1 Reactor Coolant Pump. 5.4-11

Figure 5.4.2–1 Model 91TT-1 Steam Generator.....5.4-25

Figure 5.4.2–2 Broached Tube Support Plate Hole Pattern 5.4-26

Figure 5.4.3-1 Reactor Coolant Piping.....5.4-33

Figure 5.4.7-1 Residual Heat Removal System Flow Diagram.....5.4-59

Figure 5.4.7-2 Residual Heat Removal System P&ID 5.4-60

Figure 5.4.7-3 CS/RHR Pump Characteristic Curve.....5.4-62

Figure 5.4.7-4 Residual Heat Removal System Mode Diagram 5.4-63

Figure 5.4.7-5 RCS Temperature Transient Curve (Normal Shutdown).....5.4-67

Figure 5.4.7-6 RCS Temperature Transient Curve (Safe shutdown).....5.4-68

Figure 5.4.10-1 Pressurizer 5.4-80

Figure 5.4.11-1 Pressurizer Relief Tank 5.4-85

ACRONYMS AND ABBREVIATIONS

ALARA	as low as reasonably achievable
ANS	American Nuclear Society
ANSI	American National Standards Institute
AOO	anticipated operational occurrence
ASME	American Society of Mechanical Engineers
ASTM	American Society for Testing and Materials
BEF	best estimate flow
BTP	branch technical position
CCW	component cooling water
CCWS	component cooling water system
CFR	Code of Federal Regulations
CRDM	control rod drive mechanism
CS	containment spray
CS/RHR	containment spray/ residual heat removal
CSS	containment spray system
CT	compact tension
C/V	containment vessel
CVN	charpy v-notch
CVCS	chemical and volume control system
CVDT	containment vessel reactor coolant drain tank
DNBR	departure from nucleate boiling ratio
DV	depressurization valve
ECCS	emergency core cooling system
ECT	eddy-current inspection
EFPY	effective full power years
EOL	end-of-life
EPRI	Electric Power Research Institute
FLB	feedwater line break
GDC	General Design Criteria
GMAW	gas metal arc welding
GTAW	gas tungsten arc welding
HAZ	heat-affected zone
HLT	helium leak test
HPME	high pressure melt ejection
HVAC	heating, ventilation, and air conditioning
IEEE	Institute of Electrical and Electronics Engineers
IGA	intergranular attack
ISI	inservice inspection
IST	inservice testing

ITAAC	inspections, tests, analyses, and acceptance criteria
LBB	leak before break
LCO	limiting condition for operation
LOCA	loss-of-coolant accident
LOOP	loss of offsite power
LTOP	low temperature overpressure protection
MCP	main coolant piping
MCR	main control room
MSLB	main steam line break
MSS	main steam supply system
NDE	nondestructive examination
NDTT	nil ductility transition temperature
Ni-Cr-Fe	nickel-chromium-iron
NPSH	net positive suction head
ODSCC/IGA	outside diameter stress corrosion cracking/intergranular attack
PAW	plasma arc welding
PRT	pressurizer relief tank
PSI	preservice inspection
PSS	process and post-accident sampling system
PT	liquid penetrant examination
P-T	pressure-temperature
PTS	pressurized thermal shock
PWR	pressurized-water reactor
PWSCC	primary water stress corrosion cracking
RCDT	reactor coolant drain tank
RCL	reactor coolant loop
RCP	reactor coolant pump
RCPB	reactor coolant pressure boundary
RCS	reactor coolant system
RG	Regulatory Guide
RHR	residual heat removal
RHRS	residual heat removal system
RMI	reflective metal insulation
RTD	resistance temperature detectors
RT_{NDT}	reference nil ductility temperature
RT_{PTS}	reference pressurized thermal shock temperature
RV	reactor vessel
RWSP	refueling water storage pit
SAW	submerged arc weld
SBO	station blackout

SCC	stress corrosion cracking
SDV	safety depressurization valve
SFP	spent fuel pit
SG	steam generator
SI	safety injection
SIS	safety injection system
SMAW	shielded metal arc welding
SRP	Standard Review Plan
SSC	structure, system, and component
SSE	safe-shutdown earthquake
TI-SGTR	temperature induced steam generator tube rupture
TMI	Three Mile Island
TT	thermal treatment
UCC	underclad cracking
USE	upper shelf energy
UT	ultrasonic examination
VCT	volume control tank
WPS	welding procedure specifications

5.0 REACTOR COOLANT AND CONNECTING SYSTEMS

5.1 Summary Description

The reactor coolant system (RCS) provides reactor cooling by transferring the heat from the core to the secondary system to produce steam for the turbine. The major components of the RCS consists of a reactor vessel (RV), steam generators (SGs), reactor coolant pumps (RCPs), pressurizer, pressurizer relief tank (PRT), reactor coolant pipes and valves. Design and operating parameters of the RCS are provided in Table 5.1-1.

The RCS, including connections to related auxiliary systems, constitutes the reactor coolant pressure boundary (RCPB).

The performance and safety design bases of the RCS and its major components are interrelated. The design bases are listed as follows:

- The RCS has the capability to transfer heat produced during the power operation, when the reactor is subcritical, including the initial phase of plant cool-down, to the Main Steam System.
- The RCS has the capability to transfer to the residual heat removal system (RHRS) the heat produced during the subsequent phase of plant cooldown and cold shutdown.
- The RCS heat removal capability, under power operation and normal operational transients including the transition from forced to natural circulation, ensures no fuel damage within the operating bounds permitted by the Reactor Control and Protection Systems.
- The RCS provides the water used as the core neutron moderator and reflector for conserving thermal neutrons and improving neutron economy, and as a solvent for the neutron absorber used in chemical shim reactivity control.
- The RCS maintains the homogeneity of the soluble neutron poison concentration and the rate of change of the coolant temperature so that uncontrolled reactivity changes do not occur.
- The RCS pressure boundary components are capable of accommodating the temperatures and pressures associated with operational transients.
- The pressurizer maintains the system pressure during operation and limits pressure transients. During the reduction or increase of plant load, the pressurizer accommodates volume changes in the reactor coolant.
- The RCPs supply the coolant flow necessary to remove heat from the reactor core and transfer it to the SGs.

- The SGs provide high-quality steam to the turbine. The tubes and tube sheet boundary are designed to prevent the transfer of radioactivity generated within the core to the secondary system.

- The RCS piping contains the coolant under operating temperature and pressure conditions and limits leakage (and activity release) to the containment atmosphere. The RCS piping contains demineralized borated water that is circulated at the flow rate and temperature consistent with achieving the reactor core thermal and hydraulic performance.

- The RCS is monitored for loose parts. This is further described in detail in Subsection 4.4.6.

- The RCPB components are consistent with 10 CFR 50.2 (Ref. 5.1-1) and 10 CFR 50.55a (Ref. 5.1-2). Applicable codes and standards of RCS components are identified in Tables 3.2-2.

- The RV is equipped with suitable provision for connecting the head vent that meets the requirements of 10CFR50.34 (f)(2)(vi) (Ref. 5.1-3) (Three Mile Island (TMI) Action Item II.B.1).

- Each of the pressurizer spray lines interconnected to the RCS and the pressurizer surge line are instrumented with temperature detectors to detect low temperature. The low temperature indicates insufficient flow through the pressurizer spray bypass line, which may cause thermal shock at the spray nozzle when pressurizer spray valves open. Thermal shock is avoided by means of the pressurizer spray bypass line, through a normally open bypass valve, that provides a constant small flow to maintain the pressurizer spray line temperature.

A. Component Description

Outline of the descriptions of the major components of the RCS are written below;

1. Reactor vessel (RV)

   The RV is cylindrical and the top and bottom are hemispherical. The reactor vessel has four inlet and four outlet nozzles and four direct vessel injection nozzles, which are between the upper shell flange and the top of the core. This design maintains the water inventory in the RV in case of leakage from any reactor coolant loop.

   A more detailed description can be found in Section 5.3.

2. Steam generators (SGs)

   The SGs are vertical shell and U-tube heat exchangers with integral moisture separator on the secondary side. The channel head is of hemispherical shape and divided into the inlet and outlet parts separated by a divider plate.

   A more detailed description can be found in Subsection 5.4.2.

3. Reactor coolant pumps (RCPs)

   The RCPs are vertical single-stage centrifugal pumps, each driven by a three-phase induction motor mounted above the pump. A flywheel attached to the motor provides additional inertia, thereby, preventing a rapid reduction in the reactor coolant flow during a loss of offsite power.

   A more detailed description can be found in Subsection 5.4.1.

4. Reactor coolant piping

   The inside diameter of the cross-over leg (piping between the SG and the pump suction), the hot leg (piping between the RV and the SG) and the cold leg (piping between the RCP and the RV) is 31 inches.

   The reactor coolant piping (hot leg, cold leg, and cross-over leg) is seamless stainless steel. Other piping such as the pressurizer surge line, pressurizer spray lines, pressurizer safety valve lines, loop drain line, and connecting lines to other systems are also stainless steel.

   A more detailed description can be found in Subsection 5.4.3.

5. Pressurizer

   The pressurizer provides a point in the RCS where liquid and vapor can be maintained in equilibrium under saturated conditions for pressure control purposes.

   The pressurizer is a vertical cylindrical vessel, with a hemispherical top and bottom head. Electric heaters are installed through the bottom head of the vessel and the spray nozzle, safety valve and safety depressurization valve connections are located on the top head of the vessel.

   A more detailed description can be found in Subsection 5.4.10.

6. Pressurizer relief tank (PRT)

   The PRT collects and cools the steam and water discharged from various safety and relief valves in the containment. The PRT is a horizontal, cylindrical vessel with elliptical dished heads. The vessel is constructed of austenitic stainless steel and is overpressure protected by means of rupture disks.

   A more detailed description can be found in Subsection 5.4.11.

5.1.1 Schematic Flow Diagrams

The schematic flow diagram of the RCS is shown in Figure 5.1-1. Table 5.1-2 shows the principal pressures, temperatures and flow rates of the system at the locations noted in Figure 5.1-1 under normal steady-state full-power operating conditions. These parameters are based on the best-estimate flow at the reactor coolant pump discharge. The RCS volume is presented in Subsection 4.4.3.

5.1.2 Piping and Instrumentation Schematics

The RCS piping and instrumentation schematics, shown in Figures 5.1-2, consist of four identical heat transfer loops connected in parallel to the reactor pressure vessel. Each loop contains a SG, a RCP and associated piping and valves. In addition, the system includes a pressurizer, PRT, valves such as pressurizer safety valves, interconnecting piping, and instrumentation. All the above components are located in the containment vessel.

During operation, the RCS transfers the heat generated in the core to the SGs, where steam is produced to drive the turbine-generator. Borated de-mineralized water is circulated in the RCS at a flow rate and temperature consistent with achieving the reactor core thermal-hydraulic performance. The thermal-hydraulic parameters are provided in Table 5.1-3.

The water also acts as a neutron moderator and reflector and as a solvent for the neutron absorber used in chemical shim control (boric acid). The RCPB provides a barrier against the release of radioactivity generated within the reactor and is designed to ensure a high degree of integrity throughout the life of the plant.

The RCS pressure is controlled by the use of the pressurizer where water and steam are maintained at saturation conditions by electrical heaters and water sprays. The flow restriction devices prevent the actuation of safety injection signal and supply makeup water from the chemical and volume control system (CVCS) to the RCS. Steam can be formed (by the heaters) or condensed (by the pressurizer spray) to minimize pressure variations due to contraction and expansion of the reactor coolant. Spring-loaded safety valves connected to the pressurizer provide over-pressure protection. Discharged steam is piped to the PRT, where the steam is condensed and cooled by mixing with water in the PRT.

The isolation valves are connected in series to the RCS and are a part of the RCPB. These valves minimize the possibility and extent of a loss-of-coolant accident. The closure time of the isolation valve is determined such that, in the event of postulated rupture of the components during normal reactor operation, the reactor can be shutdown and cooled down in an orderly manner, with the makeup provided by the CVCS only. The isolation valves are designed to meet the exclusion requirements of 10CFR50.55a(c) (Ref. 5.1-2).

The RCS is interfaced with a number of auxiliary systems, including the CVCS, the RHRS, the main steam supply system (MSS), the process and post-accident sampling system (PSS), the component cooling water system (CCWS) and the safety injection system (SIS).

The piping and instrumentation diagram, Figure 5.1-2, shows the extent of the system located within the containment and the points of separation between the RCS and the secondary system.

5.1.3 Elevation Drawing

Figures 5.1-3 and 5.1-4 show the plan and section view of the reactor coolant loops. These figures show the principal dimensions of the RCS in relationship to supporting and surrounding steel and concrete structures and demonstrate the protection provided to the RCS by its physical layout.

5.1.4 Combined License Information

No additional information is required to be provided by a COL applicant in connection with this section.

5.1.5 References

5.1-1 Definitions, NRC Regulations Title 10, Code of Federal Regulations, 10CFR 50.2

5.1-2 Codes and Standards, NRC Regulations Title 10, Code of Federal Regulations, 10CFR 50.55a

5.1-3 Contents of Construction Permit and Operating License Applications; Technical Information, NRC Regulations Title 10, Code of Federal Regulations, 10CFR 50.34

Table 5.1-1 Reactor Coolant System Design and Operating Parameters (Sheet 1 of 2)

General	
Plant design life (years)	60
NSSS thermal output (MW)	4,466
Core thermal output (MW)	4,451
Nominal Operating Pressure (psig)	2,235
Number of heat transfer loops	4
Pipes	
Pipe inner diameter (in.)	31
Reactor Coolant Pumps	
Type of reactor coolant pumps	Vertical shaft, single-stage, mixed flow type
Number of reactor coolant pumps	4
Motor output (hp/unit)	8,200
Pressurizer	
Type of pressurizer	Vertical cylindrical type
Number of units	1
Total volume (ft^3)	2,900
Total spray flow rate (gpm)	800

Table 5.1-1 Reactor Coolant System Design and Operating Parameters (Sheet 2 of 2)

Steam Generators	
Type of Steam generators	Vertical U-tube heat exchanger (91TT-1)
Number of steam generators	4
Heat transfer rate (MW/unit)	1,116.5
Heat transfer area (ft^2/unit)	91,500 (without plug)
Secondary side design pressure (psig)	1,185
Zero load temperature (°F)	557.0
Feedwater temperature (°F)	456.7
Steam pressure at full power (psig)	957
Steam flow late per steam generator (lb/hr)	5.0×10^6
Total steam flow late (lb/hr)	2.0×10^7

Table 5.1-2 Principal System Pressure, Temperature and Flow Rates Under Normal Steady-State Full Power Operating Conditions (Sheet 1 of 2)

Location (Figure 5.1-1)	Description	Fluid	Pressure (psig)	Nominal Temp. (°F)	Flow (gpm)
1	Hot Leg	Reactor Coolant	2,248	614.7	135,010
2	Hot Leg	Reactor Coolant	2,248	614.7	135,010
3	Hot Leg	Reactor Coolant	2,248	614.7	135,010
4	Hot Leg	Reactor Coolant	2,248	614.7	135,010
5	Cold Leg	Reactor Coolant	2,296	552.9	121,000
6	Cold Leg	Reactor Coolant	2,296	552.9	121,000
7	Cold Leg	Reactor Coolant	2,296	552.9	121,000
8	Cold Leg	Reactor Coolant	2,296	552.9	121,000
9	Cross Over Leg	Reactor Coolant	2,204	552.6	121,110
10	Cross Over Leg	Reactor Coolant	2,204	552.6	121,110
11	Cross Over Leg	Reactor Coolant	2,204	552.6	121,110
12	Cross Over Leg	Reactor Coolant	2,204	552.6	121,110
13	Surge Line Inlet	Reactor Coolant	2,248	614.7	-

Table 5.1-2 Principal System Pressure, Temperature and Flow Rates Under Normal Steady-State Full Power Operating Conditions (Sheet 2 of 2)

Location (Figure 5.1-1)	Description	Fluid	Pressure (psig)	Nominal Temp. (°F)	Flow (gpm)
14	Pressurizer Inlet	Reactor Coolant	2,243	652.7	-
15	Pressurizer Liquid	Reactor Coolant	2,235	652.7	-
16	Pressurizer Steam	Steam	2,235	652.7	-
17	Pressurizer Spray Line	Reactor Coolant	2,296	552.9	4
18	Pressurizer Spray Line	Reactor Coolant	2,296	552.9	4
19	Common Pressurizer Spray Line	Reactor Coolant	2,296	552.9	8
20	Pressurizer Safety Valve Inlet	Steam	2,235	652.7	-
21	Inlet SDV Inlet	Steam	2,235	652.7	-

Table 5.1-3 Thermal-Hydraulic Parameter

Best Estimate Flow (BEF)	Without Plugging	With 10 % Tube Plugging
Flow rate (gpm/loop)	121,000	-
Reactor vessel outlet temperature (°F)	614.7	-
Reactor vessel inlet temperature (°F)	552.9	-
Minimum Measured Flow (MMF)		
Flow rate (gpm/loop)	-	115,000
Thermal Design Flow (TDF)		
Flow rate (gpm/loop)	114,000	112,000
Reactor vessel outlet temperature (°F)	616.5	617.0
Reactor vessel inlet temperature (°F)	551.1	550.6
Mechanical Design Flow (MDF)		
Flow rate (gpm/loop)	130,000	-

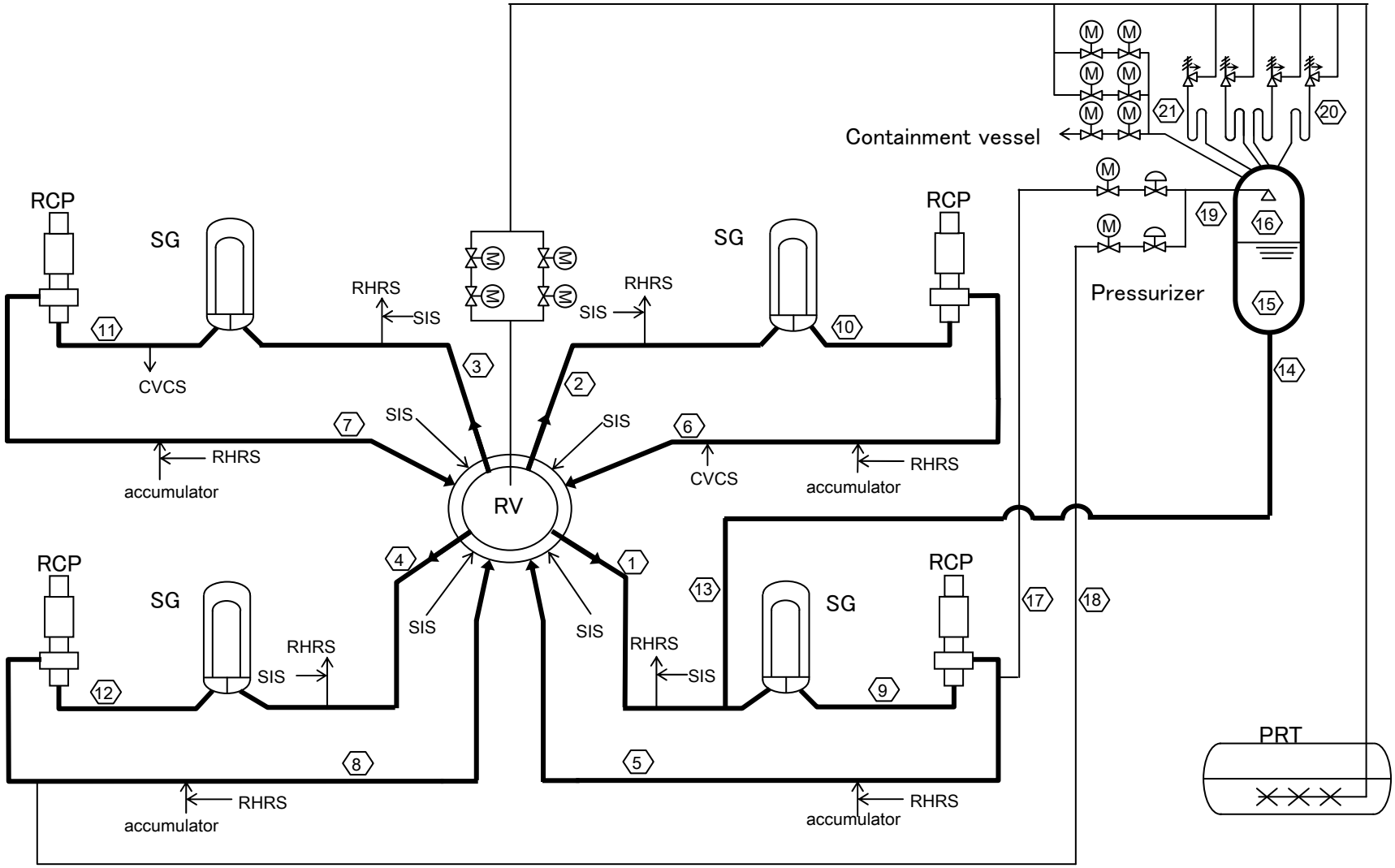

Figure 5.1-1 Reactor Coolant System Schematic Flow Diagram

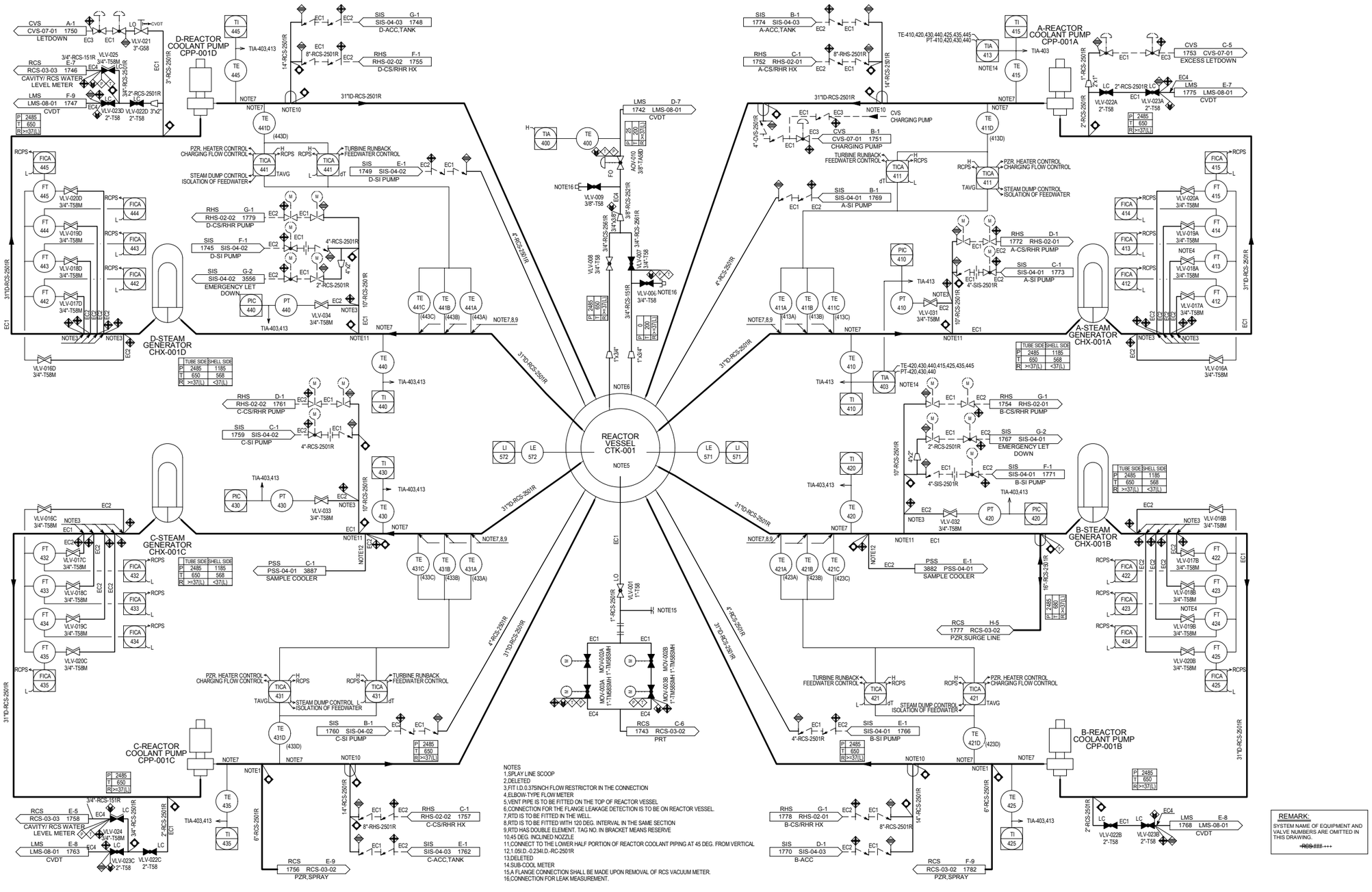

Figure 5.1-2 Reactor Coolant System Piping and Instrumentation Diagram (Sheet 1 of 3)

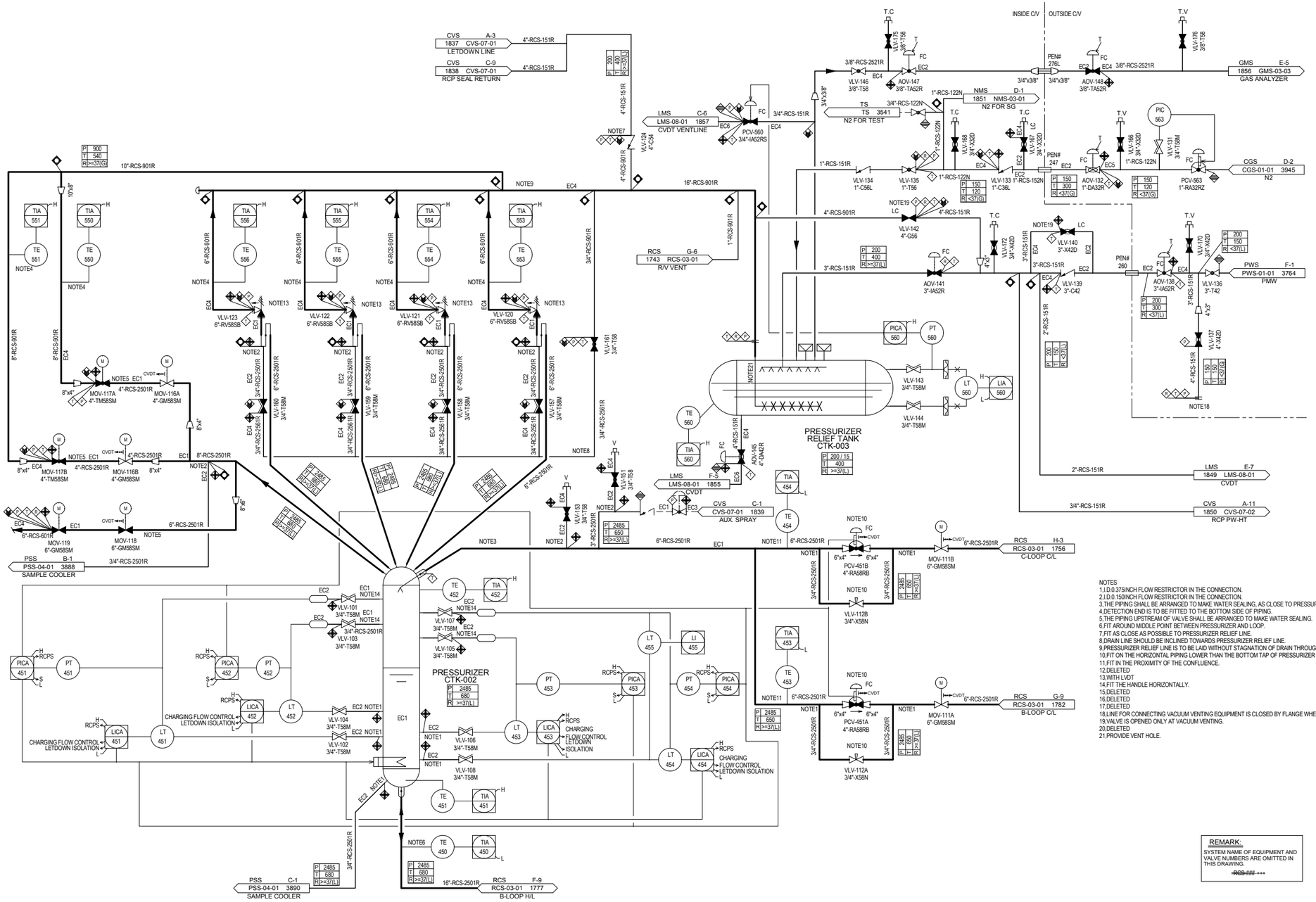

Figure 5.1-2 Reactor Coolant System Piping and Instrumentation Diagram (Sheet 2 of 3)

	A REACTOR COOLANT PUMP		B REACTOR COOLANT PUMP		C REACTOR COOLANT PUMP		D REACTOR COOLANT PUMP	
OIL LIFT PUMP PRESSURE	PCA	510	PCA	520	PCA	530	PCA	540
LOWER OIL RESERVOIR LEVEL	LA	512	LA	522	LA	532	LA	542
UPPER OIL RESERVOIR LEVEL	LA	511	LA	521	LA	531	LA	541
THRUST BEARING UPPER SHOE TEMP	TE	513	TE	523	TE	533	TE	543
THRUST BEARING LOWER SHOE TEMP	TE	514	TE	524	TE	534	TE	544
STATOR WINDING TEMP	TE	515	TE	525	TE	535	TE	545
UPPER RADIAL BEARING TEMP	TE	511	TE	521	TE	531	TE	541
LOWER RADIAL BEARING TEMP	TE	512	TE	522	TE	532	TE	542
UPPER FRAME VIBRATION TRANSMITTER (X)	VT	516A	VT	526A	VT	536A	VT	546A
UPPER FRAME VIBRATION TRANSMITTER (Y)	VT	516B	VT	526B	VT	536B	VT	546B
UPPER FRAME VIBRATION INDICATOR & ALARM	VIA	516	VIA	526	VIA	536	VIA	546
LOWER FRAME VIBRATION TRANSMITTER (X)	VT	517A	VT	527A	VT	537A	VT	547A
LOWER FRAME VIBRATION TRANSMITTER (Y)	VT	517B	VT	527B	VT	537B	VT	547B
LOWER FRAME VIBRATION INDICATOR & ALARM	VIA	517	VIA	527	VIA	537	VIA	547
SHAFT VIBRATION TRANSMITTER (X)	VT	518A	VT	528A	VT	538A	VT	548A
SHAFT VIBRATION TRANSMITTER (Y)	VT	518B	VT	528B	VT	538B	VT	548B
SHAFT VIBRATION INDICATOR & ALARM	VIA	518	VIA	528	VIA	538	VIA	548
FRAME VIBRATION RECORDER	VR	516	VR	526	VR	536	VR	546
SHAFT VIBRATION RECORDER	VR	518	VR	528	VR	538	VR	548
SPEED	SICA	418	SICA	428	SICA	438	SICA	448

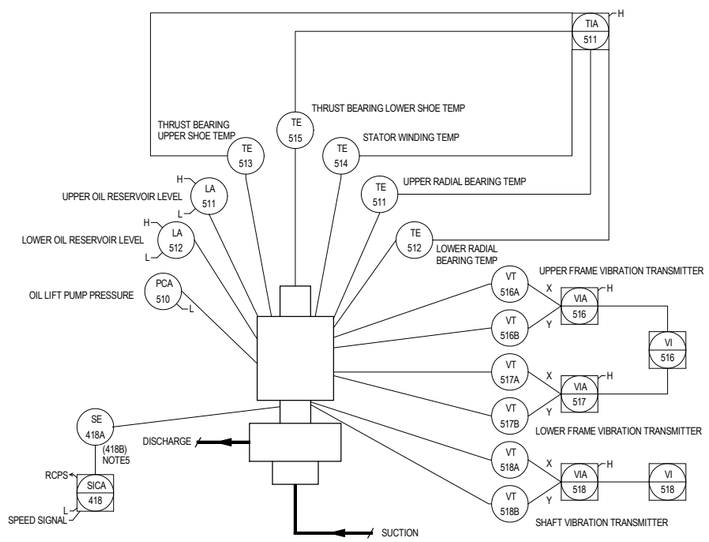

REACTOR COOLANT PUMP INSTRUMENTATION

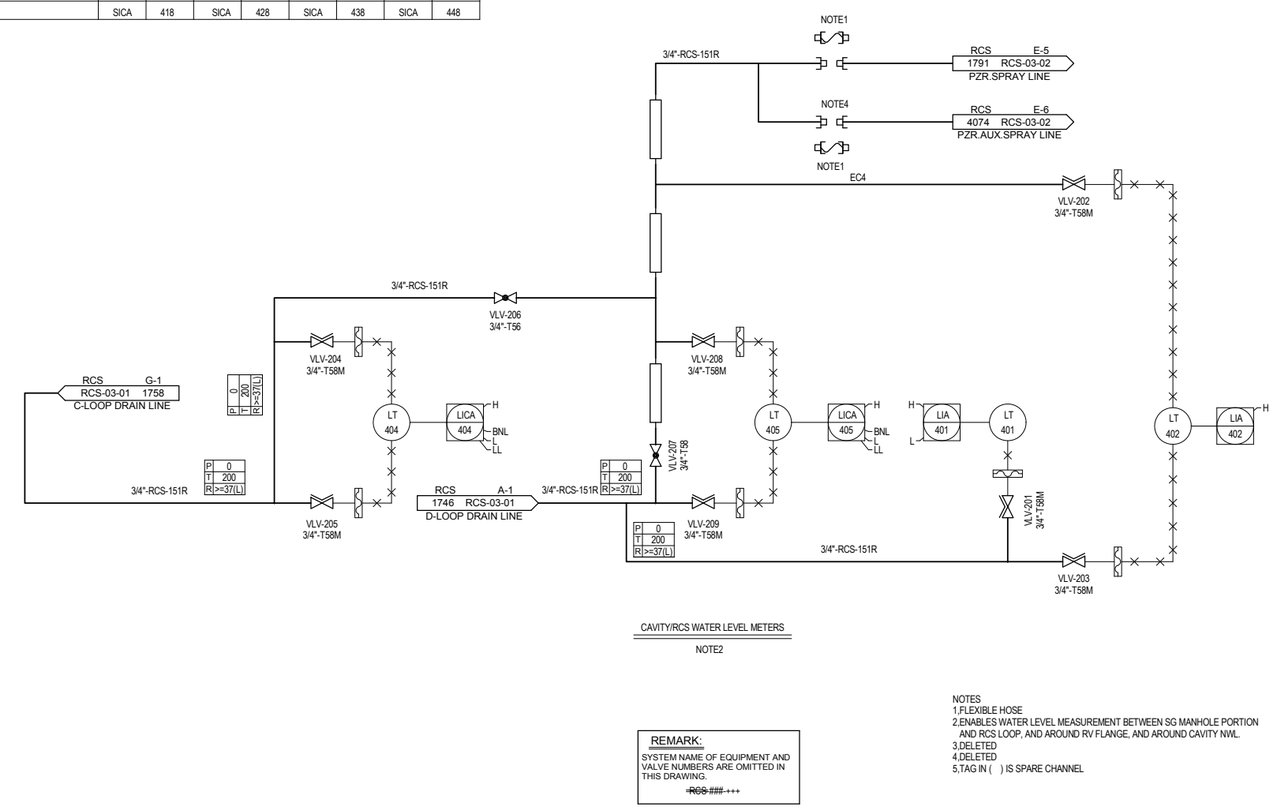

REMARK:
SYSTEM NAME OF EQUIPMENT AND VALVE NUMBERS ARE OMITTED IN THIS DRAWING.
~~*RCS-###-+++~~

NOTES
1,FLEXIBLE HOSE
2,ENABLES WATER LEVEL MEASUREMENT BETWEEN SG MANHOLE PORTION AND RCS LOOP, AND AROUND RV FLANGE, AND AROUND CAVITY NWL.
3,DELETED
4,DELETED
5,TAG IN ( ) IS SPARE CHANNEL

Figure 5.1-2 Reactor Coolant System Piping and Instrumentation Diagram (Sheet 3 of 3)

(SRI)

Figure 5.1-3 Reactor Coolant System Loop Layout

(SRI)

Figure 5.1-4 Reactor Coolant System-Elevation

5.2 Integrity of Reactor Coolant Pressure Boundary

This section describes the measures to provide and maintain the integrity of the reactor coolant pressure boundary (RCPB) during plant operation. Title 10 CFR 50.2 (Ref.5.2-1) defines the RCPB as those pressure-containing components such as pressure vessels, piping, pumps, and valves which are part of the reactor coolant system (RCS), or connected to the RCS up to, and including, the following:

1. The outermost containment isolation valve in system piping that penetrates the containment.
2. The second of two valves closed during normal plant operation in the system piping that does not penetrate the primary reactor containment.
3. The RCS safety and relief valves.

Components which are part of the RCPB but not discussed in this section are described in the following reference sections:

1. RCPB components which are part of the emergency core cooling system (ECCS) are described in Section 6.3**.**
2. RCPB components which are part of the chemical and volume control system (CVCS) are described in Subsection 9.3.4
3. Design loading, stress limits, and analyses applied to the RCS and ASME Code Class 1, 2, and 3 are provided in Subsection 3.9.1 and Subsection 3.9.3

5.2.1 Compliance with Codes and Code Cases

5.2.1.1 Compliance with 10 CFR 50, Section 50.55a

RCPB components are designed and fabricated in accordance with 10 CFR 50.55a (Ref. 5.2-3) which requires compliance with the requirements for Class 1 components in the American Society of Mechanical Engineers (ASME) Code. Some of the components such as the isolation valves and the flow restricting device meet the exclusion requirements of 10 CFR 50.55a(c) (2) (Ref. 5.2-3) and are classified as Quality Group B in accordance with Regulatory Guide 1.26 (Ref. 5.2-6). The quality group classification for the RCPB is in accordance with GDC-1 of 10 CFR 50 Appendix-A (Ref. 5.2-4) and is identified in Subsection 3.2.2, Table 3.2-2. The quality group classification is used to determine the appropriate sections of the ASME Code or other standards to be applied to the components.

The applicable edition and addenda of the ASME Code applied in the design of each Class 1 component are listed in Table 5.2.1-1.The use of Code editions and addenda issued and endorsed by the NRC subsequent to the design certification is permitted. Proposed inspections, tests, analyses, and acceptance criteria (ITAAC), as required by 10 CFR 52.47(b)(1), are covered in Tier 1 document based on the selection criteria of Section 14.3. (Ref. 5.2-34)

5.2.1.2 Compliance with Applicable Code Cases

The applicable ASME Code Cases for RCPB Class 1 components are listed in Table 5.2.1-2. In addition, other ASME Code Cases in effect at the time of the design certification may be used for pressure boundary components. Code Cases for Class 2 and 3 piping are covered in Section 3.12.

Any Code Case conditionally approved in Regulatory Guide 1.84 (Ref. 5.2-9) for Class 1 components meets the condition established in the Regulatory Guide.

The Combined License (COL) applicant addresses the addition of ASME Code Cases that are approved in Regulatory Guide 1.84. The COL applicant addresses ASME Code Cases that are approved in Regulatory Guide 1.147 “Inservice Inspection Code Case Acceptability, ASME Section XI, Division 1.” and 1.192 “Operation and Maintenance Code Case Acceptability, ASME OM Code.” (Ref. 5.2-18, Ref.5.2-20).

Table 5.2.1-1 Applicable Code Addenda for RCS Class 1 Components

RV	**ASME Code Section II, III, V, XI** **2001 Edition with 2003 Addenda**
SG	**ASME Code Section II, III, V, XI** **2001 Edition with 2003 Addenda**
pressurizer	**ASME Code Section II, III, V, XI** **2001 Edition with 2003 Addenda**
Control Rod Drive Mechanism (CRDM) housing	**ASME Code Section II, III, V, XI** **2001 Edition with 2003 Addenda**
CRDM head adapter	**ASME Code Section II, III, V, XI** **2001 Edition with 2003 Addenda**
RCP	**ASME Code Section II, III, V, XI** **2001 Edition with 2003 Addenda**
Piping or reactor coolant piping	**ASME Code Section II, III (*), V, XI** **2001 Edition with 2003 Addenda**
valves	**ASME Code Section II, III, V, XI** **2001 Edition with 2003 Addenda**

Note (1) (*): For seismic design, 1992 Edition including 1992 Addenda will be used for ASME Section III NB-3200, NB-3600, NC-3600, ND-3600 analyses, in accordance with the requirements of 10 CFR 50.55a (b) (1) (iii).

Note (2) ASME Code Section IX : Latest edition and addenda should be used.

Note (3) ASME Code Section XI : Refer to Subsection 5.2.4.1 in case ISI program is conducted.

Table 5.2.1-2 ASME Code Cases

Code Case Number	Title	Applicable components
N-71-18	Additional Material for Subsection NF, Class 1, 2, 3 and MC Supports Fabricated by Welding, Section III Division 1	Supports for SG, pressurizer, RCP, PRT
N-122-2	Procedure for Evaluation of the Design of Rectangular Cross Section Attachments on Class 1 Piping Section III, Division 1	Class 1 Piping
N-249-14	Additional Materials for Subsection NF, Class 1, 2, 3, and MC Component Supports Fabricated Without Welding, Section III, Division 1	Supports for SG and RCP
N-319-3	Alternate Procedure for Evaluation of Stresses in Butt Welding Elbows in class 1 Piping Section III, division 1	Class 1 Piping
N-391-2	Procedure for Evaluation of the Design of Hollow Circular Cross Section Welded Attachments on Class 1 Piping Section III, Division 1	Class 1 Piping
N-525	Design Stress Intensities and Yield Strength Values for UNS N06690 With a Minimum Specified Yield Strength of 30 ksi, Class 1 Components Section III, Division 1	RV
N-698	Design Stress Intensities and Yield Strength Values for UNS N06690 with a Minimum Specified Yield Strength of 35 ksi (240 MPa), Class 1 Components Section III, Division 1	RV
2142-2	F-Number Grouping for Ni-Cr-Fe Filer Metals Section IX (Applicable to all Sections, including Section III, Division 1, and Section XI)	RV, SG, Pressurizer

5.2.2 Overpressure Protection

Overpressure protection systems include all pressure-relieving devices for the following systems:

- Reactor coolant system (RCS)
- Primary side of auxiliary or emergency systems connected to the RCS
- Any blowdown or heat dissipation systems connected to the discharge of these pressure-relieving devices
- Secondary side of steam generators (SGs)

RCS and main steam system overpressure protection during power operation are provided by the pressurizer safety valves and the main steam safety valves, in conjunction with the resulting action of the reactor protection system. Combinations of these systems provide compliance with the overpressure protection requirements of the ASME Boiler and Pressure Vessel Code, Section III, Paragraphs NB-7200, Overpressure Protection Report for pressurized water reactor systems.

The only portions of an auxiliary system connected to the RCS that are utilized for RCS overpressure protection are the containment spray/residual heat removal (CS/RHR) pump suction relief valves. These valves protect the RCS during low temperature operations when the RHRS is in service.

The pressurizer safety valves discharge to the pressurizer relief tank. Blowdown and heat dissipation are further discussed in Subsection 5.4.11.

The CS/RHR pump suction relief valves discharge to the refueling water storage pit (RWSP) in the containment.

Overpressure protection for the secondary side of the SGs is provided by the main steam safety valves addressed in Subsection 10.3.2.

5.2.2.1 Design Bases

5.2.2.1.1 Design Bases for Overpressure Protection of RCS

The functional design of the overpressure protection is in conformance with the requirements of GDC 15 and GDC 31. (Ref. 5.2-4) Compliance with GDC is discussed in Section 3.1.

The overpressure protection system is able to perform its function assuming any single active failure and loss of offsite power.

Overpressure protection during power operation is provided for the RCS by the pressurizer safety valves. This overpressure protection is provided for the following bounding events that could lead to overpressure of the RCS if adequate overpressure protection is not provided:

- Loss of external electrical load.
- Loss of normal feedwater flow.
- Reactor coolant pump shaft break.
- Uncontrolled rod cluster control assembly bank withdrawal from a subcritical or low-power startup condition.
- Spectrum of rod ejection accidents.

The sizing of the pressurizer safety valves is based on analysis of a complete loss of steam flow to the turbine with the reactor operating at 102% of the design NSSS thermal power. In this analysis, feedwater flow is also assumed to be lost, and no credit is taken for operation of the pressurizer level control system, pressurizer spray system, rod control system, turbine bypass system, or main steam relief valves. The reactor is maintained at full power (no credit for reactor trip), and steam relief through the main steam safety valves is considered. The total pressurizer safety valve capacity is required to be at least as large as the maximum surge rate into the pressurizer during this transient.

This sizing procedure results in a pressurizer safety valve capacity in excess of the capacity required to prevent exceeding 110% of system design pressure for the events listed above.

The sizing of pressurizer is discussed in Subsection 5.4.10.

5.2.2.1.2 Design Bases for Low Temperature Overpressure Protection (LTOP)

An important aspect of RCS overpressure protection at low temperatures is the use of administrative controls which are discussed in paragraph 5.2.2.2.2.2, Administrative Controls. Although specific alarms do not exist to invoke specific administrative procedures, annunciation is provided to alert the operator to arm the cold overpressure mitigation system. Operating procedures maximize the use of a pressurizer steam bubble, since a steam bubble reduces the maximum pressure reached for some transients, and slows the rate of pressure increase for others, and aids the operator in controlling RCS pressure during low temperature operation.

When the RCS is at temperatures below approximately 350^0F, the RCS is aligned to the RHRS for the purposes of removing residual heat from the core, providing a path for letdown to the purification subsystem, and controlling the RCS pressure when the pressurizer is operating in a water solid mode. The RHRS is provided with self-actuated water relief valves to prevent overpressure in this relatively low design pressure system caused either within the system itself or from transients transmitted from the RCS. The CS/RHR pump suction relief valves mitigate pressure transients originating in the RCS to maximum pressure values determined by the relief valve set pressure. The CS/RHR pump suction relief valves discharge to the refueling water storage pit (RWSP) in the containment.

The low design pressure RHRS is normally isolated from the high design pressure RCS during reactor power operation at temperatures above approximately 350^0F by two isolation valves in series.

The LTOP is designed to meet the following requirements: (Ref. Standard Review Plan Branch Technical Position 5-2).

- The system is designed and installed to prevent exceeding the applicable technical specifications and Appendix G limits for the RCS while operating at low temperatures. The system is capable of relieving pressure during all anticipated over-pressurization events at a rate sufficient to satisfy the technical specification limits, particularly while the RCS is in a water-solid condition.

- The LTOP system is operable during startup and shutdown conditions below the enable temperature, defined as the water temperature corresponding to a metal temperature of at least RT(NDT) + 90^oF at the beltline location (1/4t or 3/4t) that is controlling the ASME Code, Section III, Appendix G limit calculations.

- The system is able to perform its function assuming any single active component failure. Analyses using appropriate calculation techniques will demonstrate that the system provides the required pressure relief capacity assuming the most limiting single active failure. The cause for initiation of the event (e.g., operator error, component malfunction) will not be considered as the single active failure. The analyses will assume the most limiting allowable operating conditions and systems configuration at the time of the postulated cause of the overpressure event.

  All potential over-pressurization events are considered when establishing the worst-case event. Some events may be prevented by using protective interlocks or by locking out power. These events will be identified individually.

- The design of the system uses Institute of Electrical and Electronics Engineers (IEEE) Standard 603 as guidance. The system may be manually enabled; however, an alarm will be provided to alert the operator to enable the system at the correct plant condition during cool down. Positive indication will be provided to indicate when the system is enabled. An alarm will activate when the protective action is initiated.

- To ensure operational readiness, the overpressure protection system is testable. Technical specification surveillance requirements include a test for valve operability, as a minimum, to be conducted as specified in ASME Code Section XI.

- The system meets the requirements of Regulatory Guide 1.26 (Ref. 5.2-6) and Section III of the ASME Code.

- The overpressure protection system is designed to function during an operating-basis earthquake. It does not compromise the design criteria of any other safety-grade system with which it would interface, such that the requirements of Regulatory Guide 1.29 (Ref. 5.2-7) are met.

- The overpressure protection system does not depend on the availability of offsite power to perform its function.
- Pressure relief is from a low-pressure system not normally connected to the primary system, so interlocks that would isolate the low pressure system from the primary coolant system do not defeat the overpressure protection function.

5.2.2.2 Design Evaluation

5.2.2.2.1 Design Evaluation for Overpressure Protection of RCS

An Overpressure Protection Evaluation for RCS, except LTOP, is included in Chapter 15. The evaluation addresses design description of the incidents, assumptions made, method of analysis, and conclusions. A description of the pressurizer safety valves performance characteristics is also included Chapter 15.

The relief capacities of the pressurizer safety valves are determined from the postulated overpressure transient conditions in conjunction with the resulting action of the reactor protection system.

A LTOP Report including LTOP analyses is prepared according to NB-7200 of Section III of the ASME code**.**

5.2.2.2.2 Design Evaluation During Low-Temperature Operation

5.2.2.2.2.1 Low Temperature Transient Evaluation During Water Solid Conditions

Potential overpressurization transients to the RCS, while at relatively low temperatures, can be caused by either of two types of events to the RCS; i.e., mass input or heat input.

Both types result in more rapid pressure changes when the RCS is water solid.

For those low-temperature modes of operation when operation with a water solid pressurizer is possible, the CS/RHR pump suction relief valves provide low-temperature overpressure protection for the reactor coolant system. The valve is sized to prevent overpressure during the following credible events with a water-solid pressurizer:

- Inadvertent safety injection
- Charging/letdown flow mismatch
- Inadvertent actuation of the pressurizer heaters
- Loss of residual heat removal cooling
- Inadvertent start of one reactor coolant pump.

Anticipated mass and heat input transients are evaluated to demonstrate conformance with ASME III, Appendix G. The most limiting mass input transient is an inadvertent

safety injection. The most limiting heat input transient is an inadvertent reactor coolant pump startup in a loop where the steam generator temperature is 50°F higher than the other temperatures in the loop. The range of RCS temperatures was 70°F to 280°F with a corresponding range of steam generator temperatures from 120°F to 330°F.

5.2.2.2.2.2 Administrative Controls

During plant operation the following precautions are observed:

- At least two RHR inlet lines from the reactor coolant loop are not isolated unless there is a steam bubble in the pressurizer. This precaution ensures that there are relief paths from the reactor coolant loop to a CS/RHR pump suction relief valve when the RCS is at low temperature and the pressurizer is water solid.

- Whenever the pressurizer is water solid and the reactor coolant pressure is being maintained by the low pressure letdown control valve, letdown should include flow from the operating RHR loop through the RHRS cleanup to the letdown heat exchanger valve.

- One RCP should normally be running anytime RCS temperature is changed by more than 10°F in 1 hour. Additionally, RCPs should not be started if SG secondary water temperature is greater than 50°F above the RCS temperature.

- During a typical plant cool down, operable steam generators are connected to the steam header to ensure a uniform cool down of the reactor coolant loops.

- To preclude inadvertent emergency core cooling system (ECCS) actuation during heat-up and cool-down, blocking of signals actuation logic by the low pressurizer pressure and low steam line pressure is required. During further cool-down, closure and power lockout of the accumulator isolation valves is performed at 1000 psig and power lockout to the two safety injection pumps is performed at approximately 350°F in the RCS.

- Periodic ECCS performance testing of the ECCS pumps is done only during normal power operation or at hot shutdown conditions. Testing at these conditions preclude any potential for a cold overpressurization transient.

  Should cold shutdown testing of the pumps be required, the test is done when the reactor vessel is open to atmosphere, again precluding overpressurization potential.

  If cold shutdown testing with the reactor vessel closed is necessary, the procedures require only one pump to be tested with the ECCS discharge valve closed isolating potential ECCS pump pressure and the RCS is aligned to the CS/RHR pump suction relief valves.

  The SI signal circuitry testing, if performed during cold shutdown, also requires RHRS alignment and safety injection pumps power lockout to preclude developing cold over-pressurization transients.

5.2.2.3 Piping and Instrumentation Diagrams

Overpressure protection for the RCS is provided by the pressurizer safety valves shown on Figure 5.1-2, RCS Piping & Instrumentation Diagrams, in Subsection 5.1.2. The discharge line of these valves is connected to the pressurizer relief tank (PRT) inside the containment vessel.

The CS/RHR pump suction relief valves, provided for low temperature RCPB overpressure protection, are addressed in Subsection 5.4.7, and are shown on the RHRS piping and instrumentation diagrams.

5.2.2.4 Equipment and Component Description

The pressure relief system consists of the following design features:

Four pressurizer safety valves are installed on separate relief lines at the top of the pressurizer. The pressurizer safety valves prevent exceeding 110% of the system design pressure. The pressurizer safety valves are spring loaded, self actuated with backpressure compensation. The set pressure of the safety valves is the same as the design pressure of the system. The total capacity of the valves is equal to or greater than the maximum surge rate resulting from complete loss of load with only main steam safety valves. To reduce the problem of leakage through a closed valve, a water seal is formed at the inlet side of the safety valve. The temperature detector at the outlet side of the safety valve alerts the operator to the leakage or valve lifting.

One relief valve is installed in each of the four CS/RHR pump suction lines to provide low temperature overpressure protection for RCS components when the RHRS is aligned to the RCS to provide decay heat removal during plant shutdown and startup operations. The relief valves on the RHR have an accumulation of 10% of the set pressure. The set pressure is at the lower bound of the reactor vessel low temperature pressure limit.

Open and closed indication of each safety valve or relief valve is provided in accordance with the recommendations of TMI action plan item II.D.3 in 10 CFR 50.34(f) (2)(xi) (Ref. 5.2-2).

The design parameters of the pressurizer safety valves and CS/RHR pump suction relief valves are shown in Table 5.2.2-1 and Table 5.2.2-2.

The COL applicant addresses the actual throat area of the pressurizer safety valves and the CS/RHR pump suction relief valves.

5.2.2.5 Mounting of Pressure Relief Devices

The mounting of the pressurizer safety valves are shown in Figure 5.2.2-1.

The design basis for the assumed loads for the primary and secondary side pressure relief devices are described in Subsection 3.9.3.

5.2.2.6 Applicable Codes and Classification

The requirements of the ASME Boiler and Pressure Vessel Code, Section III, Paragraphs NB-7200 (Overpressure Protection Report) and NB-7300 (Relieving Capacity Requirement), are met.

Piping, valves, and associated equipment used for overpressure protection are classified according to the classification system discussed in Subsection 3.2.2, System Quality Group Classification.

5.2.2.7 Material Specifications

Refer to Subsection 5.2.3, for a description of RCPB materials specifications.

5.2.2.8 Process Instrumentation

Each pressurizer safety valve discharge line incorporates a temperature indication and alarm to notify the operator in the main control room of steam discharge due to either leakage or actual valve operation.

Open and closed indications for each pressurizer safety valve and the CS/RHR pump suction relief valves are provided in accordance with the recommendations of TMI action plan item II.D.3 in10 CFR 50.34(f)(2)(xi)

5.2.2.9 System Reliability

Safety valves and relief valves are in compliance with ASME sections III and XI. ASME Code safety valves and relief valves have demonstrated a high degree of reliability over many years of service. The testing and inspection of safety valves and relief valves (addressed in 5.2.2.10) provide assurance of continued reliability and conformance to set points.

The pressurizer safety valves are the pop type with backpressure compensation features, and are spring loaded and self-actuated by fluid pressure, when the set point pressure is exceeded. Therefore, full credit is taken for the pressurizer safety valves.

5.2.2.10 Testing and Inspection

Testing and inspection of the overpressure protection components are discussed in Subsection 5.4.7, Section14.2, Subsection 3.9.6, and Section 6.6.

The testing and inspection requirements are in conformance with industry standards, including Section XI of the ASME Code and the recommendations of TMI action plan item II.D.1 in 10 CFR 50.34(f)(2)(x).

Table 5.2.2-1 Pressurizer Safety Valve Design Data

Number	4
Design pressure (psig)	2,485
Design temperature (°F)	680
Minimum required capacity per valve (lb/hr), at 3% accumulation of set pressure	432,000
Set pressure (psig)	2,485
Fluid	Saturated steam
Inlet and Outlet size (in.)	6
Inlet piping length (in.)	110
Environmental condition Ambient temperature (°F) Relative humidity (%)	 Up to 120 Up to 100

Table 5.2.2-2 CS/RHR Pump Suction Relief Valve Design Data

Number	4
Design pressure (psig)	900
Design temperature (°F)	400
Minimum required capacity per valve (gpm)	1,320
Set pressure (psig)	470
Fluid	Reactor Coolant
Inlet and Outlet size (in.)	6
Environmental condition Ambient temperature (°F) Relative humidity (%)	 Up to 120 Up to 100

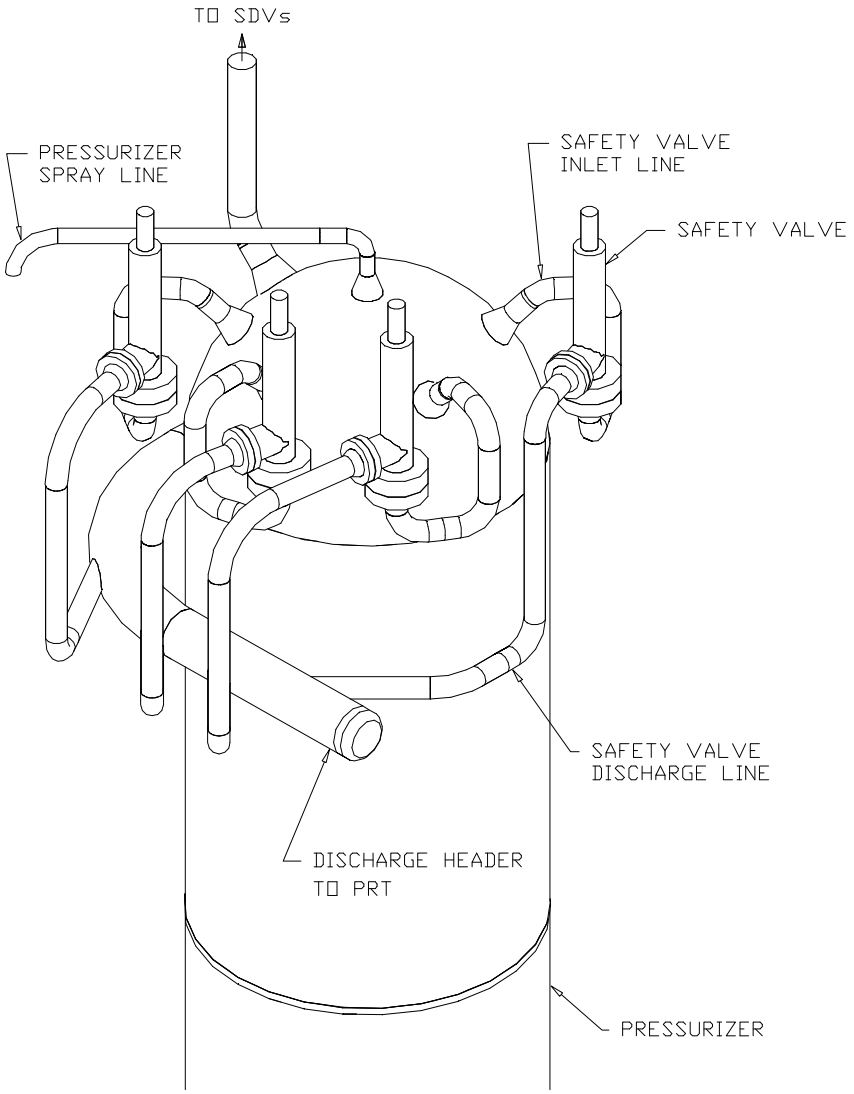

Figure 5.2.2-1 Mounting of the pressurizer safety valves

5.2.3 Reactor Coolant Pressure Boundary Materials

This subsection describes material specifications issues common to the reactor coolant pressure boundary (RCPB) components. Material specification discussions for the RV are provided in Section 5.3. RCPB materials are fabricated in accordance with the requirements of GDC 1, GDC 30 of 10 CFR 50 Appendix-A and 10 CFR 50.55a which meets the requirements for Class 1 components in ASME Code Section III. (Ref.5.2-4, Ref.5.2-3)

5.2.3.1 Material Specifications

Typical material specifications used for the US-APWR RCPB components are listed in Table 5.2.3-1. The table shows the grade or type and final metallurgical condition, where applicable, for the ferritic steels, austenitic stainless steels, and nickel-base-alloys used.

The materials used in the RCPB satisfy the applicable material requirements of ASME Code Section III and conform to the applicable ASME Code Section II material specifications. (Ref.5.2-21)

ASME SA-508 materials are used for the Class 1 ferritic pressure boundary forgings and SA-533 materials are used for the Class 1 ferritic pressure boundary parts formed from plates. ASME type F316/ F304 or F316 LN/ F304LN materials are used for austenitic pressure boundary stainless steel forgings and ASME type 316/ 304 or 316 LN/ 304LN are used for austenitic stainless steel pressure boundary parts formed from plates.

Austenitic stainless steel base materials for RCPB applications are solution heat treated to prevent sensitization and stress corrosion cracking (SCC). Nickel-chromium-iron alloy materials for RCPB applications are thermally treated to enhance their resistance to primary water stress corrosion cracking (PWSCC).

The welding materials used for joining RCPB ferritic base materials conform to the requirements of ASME Code Section III, and to the welding material specification or to the requirements for other welding material as permitted in Section IX. (Ref.5.2-19)

The welding materials used for joining the austenitic stainless steels, austenitic stainless steel cladding and austenitic stainless steel buttering conform to the requirements of the welding material specification SFA 5.4 or 5.9 in ASME Code Section II or to the requirements of other welding material as permitted in ASME Code Section IX (Ref.5.2-24). In addition, the above welding materials conform to the requirements of ASME Code Section III. (Ref.5.2-22)

The welding materials used for joining nickel-chromium-iron alloy or austenitic stainless steel for RCPB base material combinations of similar material and dissimilar ferritic material and nickel-chromium-iron alloy cladding conform to the requirements of the welding material specification SFA 5.11 or 5.14 in ASME Code Section II and to the requirements of ASME Code Section III.

The fabrication inspection requirements for major components are described in Subsections 5.3.1.3, 5.4.1.5, 5.4.2.1, 5.4.3.5, and 5.4.10.4.

5.2.3.2 Compatibility with Reactor Coolant

5.2.3.2.1 Chemistry with Reactor Coolant

RCS water chemistry specifications are shown in Table 5.2.3-2. RCS water chemistry is specified to minimize corrosion. Routinely scheduled chemical analysis is performed to verify that the reactor coolant chemistry stays within specified limits.

The CVCS provides means for adding chemicals to the RCS to perform the following functions:

- Control the pH during pre-startup testing and subsequent operation
- Scavenge oxygen from the coolant before heat-up
- Control radiolysis reactions involving hydrogen, oxygen, and nitrogen during power operation subsequent to startup

Normal limits for chemical additives and reactor coolant impurities are given in Table 5.2.3-2. Standard and limited values are consistent with Electric Power Research Institute (EPRI) Primary Water chemistry Guidelines. (Ref. 5.2-27)

The pH control is accomplished using lithium hydroxide monohydrate where the lithium is in the form of a lithium-7 isotope that is enriched to greater than 99.9%. This chemical is chosen for its compatibility with the water chemistry of borated water/stainless steel/zirconium/Inconel systems. The lithium-7 hydroxide solution is prepared in the laboratory and transferred to the chemical additive tank. Reactor makeup water is then used to flush the solution to the suction header of the charging pumps. If the concentration of lithium-7 hydroxide exceeds the specified range, a cation bed demineralizer is employed in the let down line in series operation with the mix bed demineralizer to maintain the proper concentration.

During cold reactor startup, hydrazine is employed as an oxygen scavenging agent. The hydrazine solution is introduced into the RCS in the same manner as the pH control agent.

The reactor coolant is treated with dissolved hydrogen to control the net decomposition of water that occurs due to radiolysis in the core region. The hydrogen also reacts with oxygen and nitrogen impurities under the impetus of core radiation. Sufficient hydrogen partial pressure is maintained in the volume control tank so that the desired equilibrium concentration of hydrogen is maintained. A self-contained pressure control valve maintains a minimum pressure in the vapor space of the volume control tank. This pressure can be adjusted to provide the required equilibrium hydrogen concentration.

Boron in the chemical form of boric acid is added to the RCS for long-term reactivity control of the core.

A soluble zinc (Zn) compound depleted of Zn-64 may be added to the reactor coolant as a means to reduce radiation fields within the primary system. When used, the target

system zinc concentration is normally maintained to a concentration no greater than 10 ppb.

Suspended solid (corrosion product particles) and other impurity concentrations are maintained below specified limits by controlling the chemical quality of makeup water and chemical additives and by purification of the reactor coolant through the CVCS.

5.2.3.2.2 Compatibility of Construction Materials with Reactor Coolant

ASME SA-508 Grade 3 forgings and SA-533 Grade B formed plate are used for the Class 1 ferritic pressure boundary. Field experience has shown that these materials offer the strength and toughness required to meet the pressure boundary safety and design life objectives.

All ferritic low-alloy and carbon steel surfaces that may come into contact with the reactor coolant and are used in RCPB applications are covered with stainless steel or nickel-chromium-iron cladding for corrosion resistance. Stainless steel and nickel-chromium-iron alloy cladding have been proven to be effective at preventing corrosion of RCPB base metals.

Ferritic low-alloy and carbon steel nozzles of RCPB components have stainless steel safe ends that are attached using stainless steel or nickel-chromium-iron alloy weld metal.

Austenitic stainless steel base materials used in RCPB applications are solution heat treated to avoid sensitization, although pressurized-water reactor (PWR) water chemistry is well controlled to prevent SCC of austenitic stainless steels. Nickel-chromium-iron alloy base materials are thermally treated to maximize the resistance to SCC and intergranular corrosion. Heat treatment is required by material specifications.

Components using stainless steel sensitized in the manner expected during component fabrication and installation operate satisfactory under normal plant chemistry conditions in PWR systems because chlorides, fluorides, and oxygen are controlled to very low levels. Austenitic stainless steel materials used in RCPB conform to Regulatory Guide 1.44, “Control of the Use of Sensitized Stainless Steel.” (Ref.5.2-14)

Nonmetallic materials exposed to reactor coolant in RCS are limited. Grafoil is used for primary manway gasket filler in steam generators and pressurizers. The hoop of the gasket is SB-168, nickel-chromium-iron alloy, and only a very limited area of the Grafoil is exposed to reactor coolant. Field experience proves that Grafoil is compatible with reactor coolant.

5.2.3.2.3 Compatibility of Construction Materials with External Insulation and Reactor Coolant

The US-APWR design utilizes the reflective metal insulation (RMI), to the great extent practical, for the pipe lines and components subject to jet impingement from a high-energy line break, in order to mitigate the generation of insulation debris. RMI is made of stainless steel and applied to most part of the RCS components and piping. (Ref. 5.2-36)

Nonmetallic insulating materials, which may be applied to small segments of pipe line, comply with Regulatory Guide 1.36, "Nonmetallic Thermal Insulation for Austenitic Stainless Steel" (Ref.5.2-11) and American Society for Testing and Materials (ASTM) C795-03, "Standard Specifications for Thermal Insulation for Use in Contact with Austenitic Stainless Steel" (Ref.5.2-26). Use of insulation containing halogen compounds that exceed the limits of Regulatory Guide 1.36 is not permitted by Mitsubishi Heavy Industries, Ltd. (MHI) specifications. The level of leachable contaminants, especially chlorides and fluorides, is maintained at the lowest practicable levels to minimize the potential for SCC.

Chloride and fluoride ions can cause SCC of austenitic stainless steel, while sodium and silicates produce corrosion inhibiting ions. Basically, the balance of contaminant anions and cations determines the severity of SCC. Accidental leakage of fluid through pipe fittings, valves, or nearby equipment could lead to corrosion of the RCPB materials. Therefore, by design, leakage paths of such components have been evaluated to minimize contact with the RCPB materials. In regions where contact cannot be prevented, the insulation is designed to be easily removable to permit more thorough examination.

In the event that ferritic materials are exposed to reactor coolant leakage, the ferritic materials will experience increased general corrosion. Materials compatible with the coolant are used where minor leakage is considered possible based on service experience (such as valve packing, pump seals, etc.). During in service operation, coolant leakage can be detected by monitoring the water level of the container vessel sump. Ferritic materials exposed to coolant leakage can be readily identified by an inservice visual and/or nondestructive inspection program.

5.2.3.3 Fabrication and Processing of Ferritic Materials

5.2.3.3.1 Fracture Toughness

RCPB components are constructed of high durability grade materials. All Class 1 pressure retaining components comply with ASME Code Section III, Article NB-2300 “Fracture Toughness Requirements for Materials”. (Ref.5.2-22)

Fracture toughness of ferritic RCPB materials complies with ASME Code Section III, NB-2300 and NB-2400, and the reference nil ductility temperature (RT_{NDT}) of these materials does not exceed 10ºF.

Fracture toughness properties of reactor vessel materials are covered in Subsection 5.3.1.5, and fracture toughness of threaded fastener materials is covered in Subsection 5.2.3.6.

Pressure retaining materials comply with Appendix G of 10CFR50 and with Article NB-2300 and Appendix G of Section III of the ASME Code. (Ref.5.2-5, Ref.5.2-22) The RT_{NDT} is established for all required pressure retaining materials used in the Class 1 vessels. The actual as procured fracture toughness data will be submitted to the NRC staff at a predetermined time e.g., ITAAC.

For the ferritic materials used for piping, pumps, and valves of the RCPB, impact testing is performed in accordance with NB-2332 for maximum thickness of 2.5 inches, and in accordance with NB-2331 for thicknesses greater than 2.5 inches.

Calibration of instruments and equipment is performed as required by the ASME Code, Section III, NB-2360.

5.2.3.3.2 Control of Welding

All welding is conducted using procedures in compliance with the rules of ASME Code Sections III and IX to avoid cold cracking and embrittlement of the welded materials. Preheating is performed for Class 1 component weld joints in accordance with the qualified welding procedure specifications (WPS) in compliance with ASME Code Sections III and IX.

The proposed minimum preheat and maximum interpass temperatures for welding of low alloy steel components of the RCPB are as follows.

Minimum preheat temperatures are generally kept higher than those listed in Appendix D of ASME Section III, which is 250°F for P-No.3 material. However, minimum preheat temperatures below this temperature may be applied to the first passes of P-No.3 material provided a welding procedure qualification demonstrates acceptable weld integrity and quality. Maximum interpass temperatures for production welding shall be those specified in welding procedure qualification. For low alloy steels, generally the maximum interpass temperature is 500°F.

Hydrogen is removed by either post heating at a temperature and time sufficient to preclude the effects of hydrogen assisted cracking, or by maintaining preheat until post weld heat treatment is performed. Volumetric NDE are carried out for pressure boundary welds. Welding electrodes and fluxes are baked and stored in ovens prior to delivery to the welder because it is generally recognized that atomic hydrogen absorption and diffusion into and through the region being welded have an important influence on the tendency to form cracks. Holding temperature is maintained while being stored in ovens (after baking) before delivery.

As mentioned in Regulatory Guide 1.43 "Control of Stainless Steel Weld Cladding of Low-Alloy Steel Components" (Ref.5.2-13), underclad cracking (UCC) has been reported only in forgings and plate material of SA-508 Class 2 composition made to coarse-grain practice when clad using a high-heat input welding process (Ref. 5.2-28, Ref.5.2-29). The designation of SA-508 Class 2 material in the Regulatory Guide 1.43 was changed to SA-508 Grade 2 Class 1 or 2 because the designation changed in the 1998 edition of the ASME Code. The US-APWR Class 1 components use SA-508 Grade 3 Class 1 or 2 and SA-533 Type B Class 1 or 2 of ASME Code Section II (2001 edition). Generally, SA-508 Class 2 (current SA-508 Grade 2) is susceptible to UCC, while SA-508 Class 3 (current SA-508 Grade 3) is resistant, as demonstrated by MHI in UCC susceptibility tests.

As mentioned in Regulatory Guide 1.34, “Control of Electroslag Properties,” (Ref.5.2-10) electroslag welding for longitudinal joints is not applied to SA-508 Class 1 and 2 components. Submerged arc welding and electroslag welding processes are, however, used successfully in the industry for overlay welding procedures with a strip electrode.

MHI has researched and developed these corrosion resistant overlay welding procedures for nuclear plant applications. The electroslag welding procedure offers excellent properties such as low dilution and good bead shape. MHI has applied electroslag welding for corrosion resistant overlays on nuclear components throughout the world since 1981.

All welder qualifications comply with ASME Code Section IX. (Ref.5.2-24) Regulatory Guide 1.71, applied for field welding applications, specifies welder qualification requirements in addition to those of Section III and IX. (Ref.5.2-17) These additional requirements do not apply for shop fabrication where the welders' physical position relative to the welds is controlled.

5.2.3.3.3 Non Destructive Examination

Nondestructive examinations of ferritic steel tubular products of RCPB components satisfy the requirements of GDC 1, GDC 30, and 10 CFR 50.55a regarding quality standards by compliance with ASME Code Section III, Subsection NB-2550 through NB-2570. Additional testing and inspection for major components are described in Subsections 5.3.1.3, 5.4.1.5, 5.4.2.1, 5.4.3.5, and 5.4.10.4.

5.2.3.4 Fabrication and Processing of Austenitic Stainless Steels

Unstabilized stainless steel can be subject to SCC when the steels are sensitized and certain contaminants are adhered to the surface of the materials, and the materials are exposed to a stressed condition. In PWR plants, dissolved oxygen and chloride contents of the reactor coolant are well controlled to prevent SCC of austenitic stainless steel. Field experience has shown that de-oxygenated, hydrogenated PWR primary water does not cause SCC in sensitized materials, unlike BWRs with oxygenated water (Ref. 5.2-31).

Although the water chemistry condition is well controlled, good metallurgical and environmental practices will be followed to further assurance of avoiding SCC, such as:

- Process control of cleaning and protection against contamination
- Use of materials in the final heat treated condition
- Control of welding processes and procedures to avoid heat-affected zone (HAZ) sensitization

Subsections 5.2.3.4.1 and 5.2.3.4.2 address Regulatory Guide 1.44, “Control of the Use of Sensitized Stainless Steel,” and present the methods and controls to avoid sensitization and to prevent intergranular attack (IGA) of austenitic stainless steel components.

5.2.3.4.1 Cleaning and Contamination Protection

Control of cleaning and protection against contamination is necessary to prevent SCC of austenitic stainless steel.

Austenitic stainless steels are susceptible to SCC under conditions where dissolved oxygen and halogens (such as chloride and fluoride) are present. The RCS water chemistry is controlled to prevent the intrusion of these aggressive substances. During normal operation, chloride is kept below 0.15 ppm and dissolved oxygen below 0.1 ppm (Table 5.2.3-2, US-APWR water chemistry limits). The effectiveness of these measures has been demonstrated by both laboratory tests and PWR operating experience. Therefore, the possibility of SCC of austenitic stainless steel is considered minimal in the US-APWR plant.

MHI imposes strict process controls for cleaning and protection against contamination for austenitic stainless steel materials during all stages of component manufacture. These process controls are applied to RCPB components, components of systems that are required for reactor shutdown, systems required for emergency core cooling, and reactor vessel internals. Exposure to contaminants is avoided by carefully controlling all cleaning and processing materials that contact the stainless steel during manufacture and installation. Halogens, especially chloride and fluoride, and their compounds are controlled in the expendable materials, such as packing materials, gaskets, insulation, tape, and lubricants.

Water quality of cleaning solutions, hydrostatic test solutions, and wet layup solutions are also controlled. The water used for final cleaning or flushing of RCPB Class 1 components is demineralized water with chloride and fluoride concentrations less than 0.15 ppm. MHI standards also provide for control of tools used in abrasive work operations such as grinding. Non-sensitization of the material is verified using the methods discussed in Regulatory Guide 1.44 ”Control of the use of sensitized stainless steel.” Pickling of sensitized stainless steel is prevented. Tools used in abrasive work operations on austenitic stainless steel, such as grinding or wire brushing, do not contain and are not contaminated with ferritic carbon steel or other materials that could contribute to intergranular cracking or SCC.

Adhesive tapes and binding agents on the surfaces of the austenitic stainless steel are completely removed using suitable solvent.

Low melting point materials such as lead, zinc, tin, antimony, cadmium, indium, mercury, and their compounds can have a detrimental effect on austenitic stainless steel and nickel-chromium-iron alloys, therefore low melting point materials are strictly controlled during the manufacturing and installation processes.

Threaded fastener lubricants containing molybdenum sulphide are prohibited from being used.

The surface cleanliness achieved by the MHI procedures satisfies the requirements of Regulatory Guides 1.37 (Ref.5.2-12) and 1.44.

5.2.3.4.2 Solution Heat Treatment Requirements

Sensitized stainless steel is more susceptible to SCC than non-sensitized stainless steel. Solution heat treated austenitic stainless steel exhibits good resistance against SCC. The types of austenitic stainless steels listed in Table 5.2.3-1 are solution heat treated as required by ASME Section II.

SCC of austenitic stainless steel, especially at the location of the HAZ, has been observed in BWR plants. Intergranular stress corrosion cracking of weld-sensitized austenitic stainless steels has since been extensively investigated (Ref. 5.2-30). The tests identified oxygenated high-purity water and elevated temperature as being contributing factors in BWR pipe cracking. These test programs also demonstrated that solution heat treatment of the material is an effective means to avoid such SCC.

The carbon content of austenitic stainless steels that used in the US-APWR RCPB conforms to RG 1.44.

Cold-worked grade austenitic stainless steel is not used for RCPB components that come into contact with the RCS coolant.

5.2.3.4.3 Material Testing Program

Austenitic stainless steel material products with simple shapes not subject to distortion during heat treatment do not need to be corrosion tested provided the solution heat treatment is followed by water quenching. Simple shapes are defined as plates, sheets, bars, pipes, and tubes, as well as forgings, fittings, and other shaped products that do not have inaccesible chambers that would preclude rapid cooling during water quenching.

In case that testing is required, the tests are performed according to the guideline of ASTM A 262, Practice A or E.

5.2.3.4.4 Control of Welding

The following paragraphs address Regulatory Guide 1.31, “Control of Ferrite Content in Stainless Steel Weld Metal”, and methods used for austenitic stainless steel welding. (Ref.5.2-8)

The welding of austenitic stainless steel is controlled to mitigate the occurrence of micro fissuring or hot cracking in the weld. It has been well documented in the technical literature that the presence of delta ferrite reduces the susceptibility of stainless steel welds to hot cracking. A minimum level of delta ferrite required to provide this protection lies somewhere between 0 and 3%.

Welding materials used for fabrication and installation welds of austenitic stainless steel materials and components are procured so as to meet the requirements of ASME Code Section III and contain not less than 5% delta ferrite. Welding materials are tested using the welding energy inputs typical of production welding.

Undiluted weld deposits or filler metal of the welding materials are required to contain a minimum of 5% delta ferrite as determined by chemical analysis and by calculation, using the appropriate weld metal constitution diagrams from Section III.

As mentioned in Regulatory Guide 1.34, “Control of Electroslag Properties,” electroslag welding for longitudinal joints is not applied to SA-508 Class 1 and 2 components. However, for overlay welding procedures with a strip electrode, submerged arc welding and electroslag welding processes are used successfully. MHI has researched and developed these corrosion resistant overlay welding procedures for nuclear plant

applications. The electroslag welding procedure offers excellent properties such as low dilution and good bead shape. MHI has applied electroslag welding for corrosion resistant overlays on nuclear components throughout the world since 1981.

All welder qualifications comply with ASME Code Section IX. Regulatory Guide 1.71 applied for field welding applications specifies welder qualification requirements in addition to those of Section III and IX. (Ref.5.2-17) These additional requirements do not apply for shop fabrication where the welders' physical position relative to the welds is controlled.

5.2.3.4.5 Nondestructive Examination

Nondestructive examination of austenitic stainless steel tubular products of RCPB components satisfies the quality standard requirements of GDC 1, GDC 30, and 10 CFR 50.55a by compliance with ASME Code Section III, Subsection NB-2550 through NB-2570. Additional testing and inspection for major components are described in Subsections 5.3.1.3, 5.4.1.5, 5.4.2.1, 5.4.3.5, and 5.4.10.4.

5.2.3.5 Prevention of Primary Water Stress Corrosion Cracking (PWSCC) for Nickel-Base Alloys

Thermally treated alloy 690 (TT690) is used in US-APWR RCPB materials to prevent PWSCC. TT690 has excellent performance against PWSCC as demonstrated by test programs and field experiences around the world. Major TT690 material parts such as steam generator tubes are inspected by the inservice inspection (ISI) program.

PWSCC of Alloy 600 has been investigated since the first report in 1959. Many results of PWSCC test programs have been reported including MHI test programs.

During comprehensive research and development program of TT690, various corrosion test programs were performed using TT690 materials, including test programs by MHI. Through these programs TT690 has been recognized to have excellent performance against PWSCC. (Ref. 5.2-32, Ref. 5.2-33)

TT690 material has been in service in PWR steam generators and reactor vessels for the last 20 years without any incidence of PWSCC. This is consistent with all laboratory results where Alloy 600 has cracked but TT690 did not. Because of this proven immunity to PWSCC, TT690 material has replaced Alloy 600 for all new MHI PWR applications.

5.2.3.6 Threaded Fasteners

Pressure-retaining threaded fasteners used for Class 1 components are fabricated from materials that have good toughness properties throughout the life cycle and meet the requirements of ASME Code Section III, Subsection NB as described in Subsection 3.13.1.3.

The reactor vessel stud bolting material is SA-540 Grade B24, which complies with Regulatory Guide 1.65 (Ref.5.2-16). Nondestructive examination of the stud bolts and nuts will be performed according to NB-2580 of Section III. Ultrasonic examination will be conducted according to ASME Code specification SA-388, "Ultrasonic Examination of

Heavy Steel Forging." Magnetic particle or liquid penetrant examination will be performed on the studs and nuts after final heat treatment and threading.

Threaded fasteners for the other pressure retaining parts of Class 1 components are made of SA-540 Grade B24, SA-193 Grade B7, or SA-194 Grade 4 or 7 low alloy steel bolting materials.

Mechanical tensile and charpy v-notch (CVN) impact tests are performed for the threaded fastener materials. CVN tests are performed to confirm the materials comply with ASME Code Section III NB-2330 fracture toughness requirements.

Fracture toughness for bolting materials with nominal diameter exceeding 4 inches are required to meet both the 25 mils lateral expansion and the 45 ft-lb CVN value, and for those with nominal diameter exceeding 1inch but less than and equal to 4inches are required to meet 25 mils lateral expansion specified in NB-2333.

Actual results of these tests are provided to the NRC staff at a predetermined time, e.g., ITAAC.

Table 5.2.3-1 Reactor Coolant Pressure Boundary Material Specifications (Sheet 1 of 4)

Component	Material	Class, Grade, or Type
Reactor Vessel Parts		
Top head dome	SA-508	Gr. 3 Cl.1
Shell and flange ring forgings	SA-508	Gr. 3 Cl.1
Bottom head dome	SA-508	Gr. 3 Cl.1
Nozzle forgings	SA-508	Gr. 3 Cl.1
Nozzle safe ends	SA-182	Gr. F316 or F316LN
Upper head penetration nozzles	SB-167	UNS N06690 (Thermally Treated 690)
Vent pipe	SB-167	UNS N06690 (Thermally Treated 690)
Radial support	SB-166	UNS N06690 (Thermally Treated 690)
Reactor vessel closure stud bolts, nuts, washers	SA-540	Gr.B24
Cladding, buttering and welds	SFA-5.4	E309L-16 E308L-16
	SFA-5.9	ER309L ER308L ER316L
	SFA-5.11	ENiCrFe-7
	SFA-5.14	ERNiCrFe-7
	Code Case 2142-2 UNS N06054	-
	Type 308L/309L Stainless Steel Strip Electrode	-
Pressure boundary welds (Low alloy steel)	SFA-5.5	E9016-G
	SFA-5.23	F9P4-EG-G, E9P4-EGN-GN
	SFA-5.28	ER80S-G
Pressure boundary welds (Stainless steel or Ni-base alloy)	SFA-5.4	E309L-16 E308L-16
	SFA-5.9	ER309L ER308L
	SFA-5.11	ENiCrFe-7
	SFA-5.14	ERNiCrFe-7
	Code Case 2142-2 UNS N06054	-
Steam Generator Parts		
Pressure forgings (including nozzles)	SA-508	Gr. 3 Cl.2
Pressure plates	SA-533	Type B Cl.2
Tubes	SB-163	UNS N06690 (Thermally Treated 690)

Table 5.2.3-1 Reactor Coolant Pressure Boundary Material Specifications (Sheet 2 of 4)

Component	Material	Class, Grade, or Type
Nozzle safe ends	SA-182	Gr. F316 or F316LN
Closure Stud bolts	SA-193	Gr. B7
Closure nuts	SA-194	Gr. 4
Cladding, buttering and welds	SFA-5.4	E309L-16 E308L-16
	SFA-5.9	ER309L ER308L
	SFA-5.11	ENiCrFe-7
	SFA-5.14	ERNiCrFe-7
	Code Case 2142-2 UNS N06054	-
	Type 308L/309L Stainless Steel Strip Electrode	-
Pressure boundary welds (Low alloy steel)	SFA-5.5	E9016-G E10016-G
	SFA-5.23	F9P4-EG-G E9P4-EGN-GN P10P2-EG-G
	SFA-5.28	ER80S-G ER90S-G
Pressure boundary welds (Stainless steel or Ni-base alloy)	SFA-5.4	E309L-16 E308L-16
	SFA-5.9	ER309L ER308L
	SFA-5.11	ENiCrFe-7
	SFA-5.14	ERNiCrFe-7
	Code Case 2142-2 UNS N06054	-
Pressurizer Parts		
Pressure forgings	SA-508	Gr. 3 Cl.1 or Cl.2
Pressure plates	SA-533	Type B Cl.1 or 2
Nozzle safe ends	SA-182	Gr. F316 or F316LN
Heater sleeves	SA-182	Gr. F316 or F316LN
Closure Stud bolts	SA-193	Gr. B7
Closure nuts	SA-194	Gr. 4

Table 5.2.3-1 Reactor Coolant Pressure Boundary Material Specifications (Sheet 3 of 4)

Component	Material	Class, Grade, or Type
Cladding, buttering and welds	SFA-5.4	E309L-16 E308L-16
	SFA-5.9	ER309L ER308L
	SFA-5.11	ENiCrFe-7
	SFA-5.14	ERNiCrFe-7
	Code Case 2142-2 UNS N06054	-
	Type 308L/309L Stainless Steel Strip Electrode	-
Pressure boundary welds (Low alloy steel)	SFA-5.5	E9016-G E10016-G
	SFA-5.23	F9P4-EG-G E9P4-EGN-GN P10P2-EG-G
	SFA-5.28	ER80S-G ER90S-G
Pressure boundary welds (Stainless steel or Ni-base alloy)	SFA-5.4	E309L-16 E308L-16
	SFA-5.9	ER309L ER308L
	SFA-5.11	ENiCrFe-7
	SFA-5.14	ERNiCrFe-7
	Code Case 2142-2 UNS N06054	-
Reactor Coolant Pump Parts		
Pressure casting	SA-351	Gr. CF8
Pressure forgings	SA-182	Gr. F304 or F304LN Gr.F316 or F316LN
Tubes and pipes	SA-213 SA-312	Type 316 Type 316
Flywheel	SA-533	Type B Class 1
Closure Stud bolts, Nuts, Washer	SA-540	Gr. B24 Cl.4 and Cl.2
Reactor Coolant Piping		
Main coolant pipe and elbow	SA-182 or SA-336	Gr. F316 or F316LN
Main coolant branch nozzles	SA-182	Gr. F316 or F316LN
Pressure Boundary Welds	SFA-5.4 SFA-5.9	E316L-16 ER316L
Surge line, spray line, and other RCS piping	SA-312 or SA-376	Type 316 or 316LN

Table 5.2.3-1 Reactor Coolant Pressure Boundary Material Specifications (Sheet 4 of 4)

Component	Material	Class, Grade, or Type
Auxiliary Pressure Vessels, Tanks		
Pressure Plates	SA-240	Type 304
Pressure Forgings	SA-182	Gr. F304
	SA-105	-
Valves		
Bodies	SA-351	CF3A, CF3M, CF8, CF8M
	SA-182	Gr.F304, F304L, F304LN Gr.F316, F316L, F316LN
Bonnets	SA-351	CF3A, CF3M, CF8, CF8M
	SA-240	Type 304, 304L, 304LN Type 316, 316L, 316LN
	SA-182	Gr.F304, F304L, F304LN Gr.F316, F316L, F316LN
Disks	SA-564	Type 630
	SA-479	Type 304, 304L, 304LN Type 316, 316L, 316LN
	SA-351	CF3A, CF3M, CF8, CF8M
	SA-182	Gr.F304, F304L, F304LN Gr.F316, F316L, F316LN
	SB-637	UNS N07718
Stems	SA-564	Type 630
	SA-479	Type 304, 304L, 304LN Type 316, 316L, 316LN Type 403
	SB-637	UNS N07718
Closure Stud Bolts	SA-453	Gr.660
	SA-193	Gr.B7, B16
	SA-564	Type 630
Closure Nuts	SA-453	Gr.660
	SA-193	Gr.B7, B16
	SA-194	Gr.6 or 8

(Note) Material specifications for Reactor Vessel Internals and Control Rod Drive Mechanism are described at Section 4.4.

Table-5.2.3-2 Recommended Reactor Coolant Water Chemistry Specification

	Analysis item	Unit	Standard value	Limiting value	Standard value for recommended analysis
1	pH at 77°F (25°C)	------	4.2 - 10.5 *1	-	—
2	Electrical conductivity	mS/m at 77°F (25°C)*6	0.1 - 4.0 *1	-	
3	Boron	ppm	0 - 4000 *2	-	
4	Chloride ion	ppm	≦ 0.05	≦ 0.15	
5	Fluoride ion	ppm	≦ 0.05	≦ 0.15	
6	Dissolved oxygen	ppm	≦ 0.005	≦ 0.1	
7	Dissolved hydrogen	cm^3-STP/kg・H_2O *3, *6	25 - 35	15 - 50	
8	Lithium	ppm	0.2 - 3.5 *4	-	
9	Suspended solids	ppm	≦ 0.35	-	
10	Acid soluble iron	ppm	-	-	≦ 0.05 *5
11	Silica	ppm	-	-	≦ 1.0
12	Zinc	ppm	-	≦ 0.01	—

*1 pH and electrical conductivity are determined by boric acid and lithium concentration.
*2 Boron concentration changes according to plant operation condition.
*3 STP means standard temperature and pressure (32°F (0°C), 0.1MPa)
*4 Lithium concentration shall be kept within upper limit concentration, when lithium concentration will be over 2.2ppm, according to Figure-5.2.3.1
*5 Acid soluble iron is indicator of the amount of corrosion product.
*6 These units are in accordance with EPRI Primary Water Chemistry Guidelines.

Definition of each values are as follows:
[Standard value]
Standard value is the achievable expected value of water chemistry when power plant is operating normally. If the water chemistry is over the standard value, suitable action should be taken to maintain the water chemistry within the standard.
[Limiting value]
The limiting value is the value, which if exceeded, requires corrective action. Plant operation shall be stopped, or, if the water chemistry is not be recovered, appropriate protective measures with operation shall be undertaken.
[Standard value for recommended analysis]
Standard value for recommended analysis is the value for normal plant operation. If the water chemistry exceeds or will exceed the value, the cause of the exceedance should be investigated, but no corrective action is required.

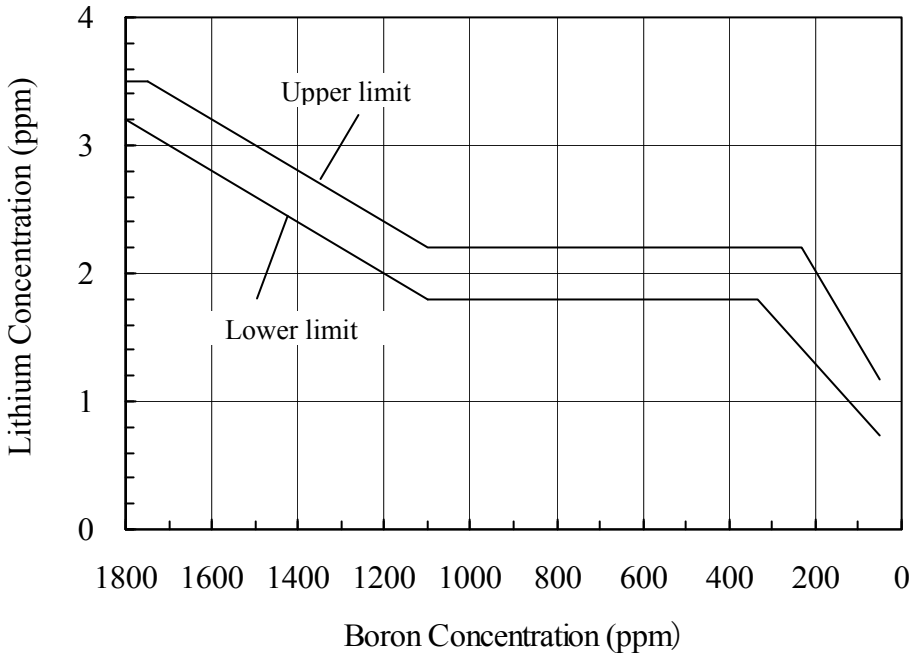

Figure-5.2.3-1 Lithium Control Band

5.2.4 Inservice Inspection and Testing of the RCPB

5.2.4.1 Inservice Inspection and Testing Program

This subsection describes the inservice inspection and testing program for the NRC Quality Group A components of the RCPB (ASME Boiler and Pressure Vessel Code Class 1 components). In particular, it includes components (other than SG tubes) and associated supports including all pressure vessels, piping, pumps, valves, and bolting. This program is performed in accordance with Section XI of the ASME Code, Rules for Inservice Inspection of Nuclear Power Plant Components (Ref. 5.2-25), including addenda in accordance with 10 CFR 50.55a (Ref. 5.2-3). This includes all ASME Code Section XI mandatory appendices.

The inservice inspection and testing program complies with the requirements of ASME Section XI incorporated by reference in 10 CFR 50.55a(b). Inservice examinations conducted during initial and successive 120-month inspection intervals comply with the requirements of the latest edition and addenda of the Code incorporated by reference in 10 CFR 50.55a(b) 12 months before the start of the inspection interval. In addition, ASME Code Cases listed in NRC RG 1.147 that are incorporated by reference in paragraph (b) of 10 CFR 50.55a, are incorporated as needed in the program for use. The Code includes requirements for system pressure tests and functional tests for active components. The requirements for system pressure tests are defined in Section XI, IWA-5000 (Ref. 5.2-25). These tests verify the pressure boundary integrity in conjunction with inservice inspection (ISI).

Subsection 3.9.6 discusses the inservice functional testing of pumps and valves for operational readiness in accordance with the requirements of Articles ISTB and ISTC of the Code (Ref. 5.2-35). Section 6.6 discusses Classes 2 and 3 component examinations.

In conformance with ASME Code and NRC requirements, the preparation of inspection and testing program is the responsibility of the COL applicant. The ISI program and inservice testing (IST) program will be submitted to the NRC. These programs comply with applicable ISI provisions of 10 CFR 50.55a(b)(2) (Ref. 5.2-3).

The ISI and IST program detail the areas subject to examination and the method, extent, and frequency of examinations, including a program to detect and correct potential RCPB corrosion caused by boric acid leaks, as described in NRC Generic Letter 88-05. (Ref. 5.2-37) Additionally, component supports and snubber testing requirements are included in the inspection program.

The ISI and IST program includes those ASME Class 1 pressure retaining components (and their supports) within the RCPB as defined in 10CFR50.2, 10CFR50.55a and Regulatory Guide 1.26 (Ref.5.2-6).

5.2.4.1.1 Arrangement and Accessibility

The physical arrangement of ASME Code Class 1 components is designed to allow personnel and equipment access to the extent practical to perform the required inservice examinations specified by the ASME Code Section XI and mandatory appendices. (Ref.

5.2-25) Design provisions, in accordance with Section XI, Article IWA-1500, are incorporated in the design processes for Class 1 components. (Ref. 5.2-25)

Piping and pipe support locations, insulation, hangers, and stops are designed so as not to interfere with inspection equipment personnel. Where this cannot be done, the components are easily and quickly removable with minimal special handling equipment.

Removable insulation and shielding are provided on those piping systems requiring volumetric and surface examination. Removable hangers are provided, as necessary and practical, to facilitate ISI. Working platforms are provided in areas requiring inspection and servicing of pumps and valves. Temporary or permanent working platforms, walkways, scaffolding, and ladders are provided to facilitate access to piping and component welds. The components and welds requiring ISI allow for the application of the required inservice inspection methods. Such design features include sufficient clearances for personnel and equipment, maximized examination surface distances, favorable materials, weld-joint simplicity, elimination of geometrical interferences, and proper weld surface preparation.

Piping arrangement allows for adequate separation of piping welds so that space is available to perform ISI. Welds in piping that pass through wall are located such that there is sufficient clearance and access into the wall penetration to perform weld examination.

Space is provided to handle and store insulation, structural members, shielding, and other materials related to the inspection. Suitable hoists and other handling equipment, lighting, and sources of power for inspection equipment are installed at appropriate locations.

The RV inspections are performed primarily from the vessel internal surfaces. Other areas of the RV, such as the closure head, are accessible from the outer surfaces of the vessel for inspection. Closure studs, nuts, and washers are removed to a dry location for direct inspection. Permanent access is provided around the RV nozzles to facilitate ISI of the RV nozzle to safe-end welds and safe-end to reactor coolant pipe welds from the outside.

Space is provided in accordance with IWA-1500(d) for the performance of examinations alternative to those specified in the event structural defects or modifications are revealed that may require alternative examinations. Space is also provided per IWA-1500(e) for necessary operations to the extent practical associated with repair/replacement activities.

The high energy system piping between containment isolation valves should receive an augmented ISI as described at Subsection 6.6.8.

5.2.4.1.2 Examination Categories and Methods

The visual, surface, and volumetric examination techniques and procedures agree with the requirements of Subarticle IWA-2200, IWB-2000 and Table IWB-2500-1 of the ASME Code, Section XI (Ref. 5.2-25). Qualification of the ultrasonic inspection equipment, personnel, and procedures is in compliance with Appendix VII and Appendix VIII of the ASME Code, Section XI (Ref. 5.2-25). The liquid penetrant method, eddy current,

ultrasonic or the magnetic particle method is used for surface examinations. Radiography, ultrasonic, or eddy current techniques (manual or remote) are used for volumetric examinations.

The methods, procedures, and requirements for ultrasonic examination of RV welds are in accordance with the requirements of Appendix VIII of Section XI of the ASME Code.

Performance demonstration for ultrasonic examination procedures, equipment, and personnel used to detect flaws is in accordance with the requirements of Appendix VIII of Section XI of the ASME Code.

Sufficient clearance is provided around pipe or component welds requiring volumetric or surface examination for ISI.

Inspections carried out remotely are considered for high radiation areas to support as low as reasonably achievable (ALARA) goals. Remote inspections are also considered in areas where physical limitations restrict or prevent manual methods.

5.2.4.1.3 Inspection Intervals

Inspection intervals are established as defined in Subarticles IWA-2400 and IWB-2400 of the ASME Code, Section XI (Ref. 5.2-25). The interval may be reduced or extended by as much as one year so that inspections are concurrent with plant outages. It is intended that inservice examinations be performed during normal plant outages such as refueling shutdowns or maintenance shutdowns occurring during the inspection interval.

5.2.4.1.4 Evaluation of Examination Results

Examination results are evaluated according to ASME Section XI, IWB-3000, with flaw indications according to IWB-3400 and Table IWB-3410-1. Repair and replacement activities, if required, are according to IWA-4000 of the ASME Code, Section XI (Ref. 5.2-25).

5.2.4.1.5 System Pressure Tests

System pressure tests comply with IWB-5000 of the ASME Code, Section XI and the technical specification requirements for operating limitations during heat-up, cool-down, and system hydrostatic pressure testing. These system pressure tests are included in the design transients defined in Subsection 3.9.1. This subsection discusses the transients included in the evaluation of fatigue of Class 1 components due to cyclic loads.

5.2.4.1.6 Code Exemptions

The ASME Section XI Code exemptions are permitted by Subarticle IWB-1220, “Components Exempt from Examination”.

Complete list of code exemptions is provided in the plant-specific ISI program.

5.2.4.1.7 Relief from ASME Code Requirements

Relief requests from ASME Code requirements, that are impractical as a result of limitations of component design, geometry, or materials of construction, are developed through the regulatory process in accordance with 10 CFR 50.55a(a) (3) or 50.55a (g) (5). In such cases, specific information is provided which identifies the applicable Code requirements, justification for the relief request, and the inspection method to be used as an alternative.

5.2.4.1.8 Code Cases

Code cases referenced by the COL application that may have been invoked in connection with the ISI program are in compliance with Regulatory Guide 1.147 (Ref. 5.2-18).

5.2.4.2 Preservice Inspection and Testing Program

The preservice examination program is based on the requirements of Article NB-5280 of Section III, Division I of the ASME Code. The PSI program complies with the edition and addenda of ASME Code section XI incorporated by reference in 10 CFR 50.55a (b). In addition, ASME code cases listed in NRC RG 1.147 that are incorporated by reference in paragraph (b) of 10 CFR 50.55a, are incorporated, as needed, in the program for use. The preparation of the inspection and testing program is the responsibility of the COL applicant.

The preservice program provides details of areas subject to examination as well as the method and extent of preservice examinations.

5.2.5 Reactor Coolant Pressure Boundary (RCPB) Leakage Detection

The reactor coolant pressure boundary (RCPB) leak monitoring system provides a means of detecting and, to the extent practical, identifying the source of reactor coolant leakage and monitoring leaks from the reactor coolant and associated systems. This system provides information which permits the plant operators to take corrective action if a leak is evaluated as detrimental to the safety of the facility.

5.2.5.1 Design Bases

The leak monitoring system is designed in accordance with the requirements of General Design Criterion 30 and the regulatory guidance as identified below:

- General Design Criterion 30, “Quality of Reactor Coolant Pressure Boundary” of Appendix A of 10 CFR Part 50, “General Design Criteria for Nuclear Power Plants,” to provide a means of detecting and, to the extent practical, identifying the source of reactor coolant leakage.
- Regulatory Guide 1.45, “Reactor Coolant Pressure Boundary Leakage Detection Systems” (Ref.5.2-15).
- Regulatory Guide 1.29, “Seismic Design Classification” (Ref.5.2-7).

5.2.5.2 Classification of Leakage

RCPB leakage is classified as either identified or unidentified leakage in accordance with the guidance of position 1 of regulatory guide 1.45.

Identified leakage includes the following:

- Leakage into closed systems such as pump seals or valve packing leaks that are captured, flow metered, and conducted to a sump or collecting tank.
- Leakage into the containment atmosphere for which the location is identified, without interfering with the unidentified leakage detection system or is identified as leakage from other than the RCPB.
- Leakage into auxiliary systems and secondary systems.

Unidentified leakage is all other leakages.

5.2.5.3 Detection of Identified Leakage

Identified leakage other than intersystem leakage, such as pump seal or valve packing, is directed to the C/V reactor coolant drain tank where it is monitored by tank pressure, temperature, and level indications.

An important identified leakage path for reactor coolant into other systems is a flow to the secondary side of the steam generator (SG) through the SG tubes.

Identified leakage through the SG (primary-to-secondary leakage) is detected by one or more of the following:

- Steam generator blowdown water radiation monitor
- High sensitivity main steam line monitor
- Condenser vacuum pump exhaust line radiation monitor
- Liquid samples taken from SG blowdown sampling line.

5.2.5.3.1 Identified Intersystem Leakage Detection

Auxiliary systems connected to or interfacing with the RCPB incorporate design and administrative provisions that serve to limit leakage. Leakage is detected by increasing auxiliary system level, temperature, and pressure indications or lifting of relief valves accompanied by increasing values of monitored parameters in the relief valve discharge path. These systems are isolated from the RCS by normally closed valves and/or check valves. A detailed explanation of Intersystem leakage (RHRS, SIS etc.), such as tag numbers of isolation valves and/or pressure relief valves, instrument used for monitoring leakage is described below.

A. Residual Heat Removal System (RHRS) (Suction Side)

The RHRS is isolated from the RCS on the suction side by motor-operated valves RHS-MOV-001A through -001D and RHS-MOV-002A through -002D. Leakage past these valves will increase the piping temperature. A surface mounted resistance temperature detectors (RTD) which is located downstream these valves is installed on the bottom of each target pipe. Leakage past these valves is detected by these RTDs and alarms in the main control room (MCR).

B. Safety Injection System (SIS)/Accumulators

The accumulators are isolated from the RCS by check valves SIS-VLV-102A through -102D and SIS-VLV-103A through -103D. Leakage past these valves and into the accumulator subsystem is detected by accumulator level indications and alarms in the MCR.

C. Safety Injection Pumps Discharge

The safety injection pumps discharge lines are isolated from the RCS by check valves SIS-VLV-015A through -015D and normally closed motor operated valves SIS-MOV-014A through -014D. Leakage past these valves will increase the piping temperature. A surface mounted RTD which is located downstream these valves is installed on the bottom of each target pipe. Leakage past these valves is detected by these RTDs and alarms in the MCR.

D. SIS Direct Vessel Injection Line

This direct vessel injection lines are isolated from the RCS by check valves SIS-VLV-012A through -012D and SIS-VLV-013A through -013D. Leakage past these valves will increase the piping temperature. A surface mounted RTD which is located downstream these valves is installed on the bottom of each target pipe. Leakage past these valves is detected by these RTDs and alarms in the MCR.

E. RHR Emergency Letdown Lines

The RHR emergency letdown lines are isolated from the RCS by normally closed motor operated valves SIS-MOV-031B and -031D and SIS-MOV-032B and -032D. Leakage past these valves will increase the piping temperature. A surface mounted RTD which is located downstream these valves is installed on the bottom of each target pipe. Leakage past these valves is detected by these RTDs and alarms in the MCR.

F. Reactor Head Seal

Seal leakage is detected by means of two monitoring tubes in the upper shell flange, one located between the inner and outer O-rings, and one located outside the outer O-rings. Piping and associated valves direct any leakage to the C/V reactor coolant drain tank.

A surface mounted RTD, installed on the bottom of the common pipe, sends a high temperature alarm signal to the MCR indicating the possibility of a leakage from the Reactor Vessel head seal.

G. Component Cooling Water System

Leakage from the RCS to the component cooling water (CCW) system is detected by the CCW radiation monitors and/or increase in the CCW surge tank level.

5.2.5.4 Detection of Unidentified Leakage

Indications of unidentified coolant leakage into the containment are provided by an air particulate radioactivity monitor, an airborne gaseous radioactivity monitor, an air cooler condensate flow rate monitoring system, and a containment sump level and flow monitoring system.

In normal operation, these monitors show a background level that is indicative of the normal level of unidentified leakage inside the containment. Variations in airborne radioactivity or specific humidity above the normal level signify an increase in unidentified leakage rates and signal to the plant operators that corrective action may be required. Similarly, increases in containment sump level signify an increase in unidentified leakage.

The sensitivity and response time of leakage detection equipment for unidentified leakage is such that a leakage rate, or its equivalent, of 1 gpm can be detected in less than an hour.

The methods employed for detecting leakage to the containment from unidentified sources are:

- Containment sump level
- Containment airborne particulate radioactivity
- Containment airborne gaseous radioactivity
- Condensate flow rate from air coolers.

Additionally, humidity, temperature, and pressure monitoring of the containment atmosphere are used for alarms and indirect indication of leakage to the containment. They do not quantify the reactor coolant leakage.

5.2.5.4.1 System Description of Unidentified Leakage detection

5.2.5.4.1.1 Containment Sump Level and Flow Monitoring System

Any leakage inside the containment from the RCPB and other components, not otherwise identified, condenses and flows by gravity through the floor drains and other drains to the containment sump, where the sump level meter measures the increase in the sump level indicating the leak rates. Indication of increasing sump level is transmitted from the sump to the MCR by means of a sump level transmitter and recorded.

A leak rate greater than or equal to 1 gpm is detectable within one hour, with an alarm actuating in the MCR to alert the operators as stated in positions 5 and 7 of regulatory guide 1.45.

The sump level monitoring system is qualified for seismic events not requiring a plant shutdown.

5.2.5.4.1.2 Containment Airborne Particulate Radioactivity Monitor

In US-APWR, this monitor corresponds to the containment radiation monitor (RMS-RE-40). Refer to Chapter 11, Subsection 11.5.2. The containment airborne particulate radioactivity monitor performs continuous sampling of the containment air and measures the radiation level in the particulate. This monitor is qualified for a safe-shutdown earthquake (SSE). An air sample is drawn outside the containment and passed through a gamma monitor that monitors its gamma rays in radioactive particulate. After passing through the monitor, the sample is returned via the closed system to the containment atmosphere. The measuring range for the monitor is from $1x10^{-10}$ μ Ci /cm^3. An indication of the monitor counting rate is provided to the MCR and electronically recorded.

The detection sensitivity of the airborne particulate radioactivity monitor for reactor coolant leak rate depends on conditions, such as radioactive concentration in the reactor coolant and a distribution coefficient of radioactive particles to the containment atmosphere.

In addition, provided that a radioactive concentration of airborne particulate in the containment is within the measuring range of the airborne particulate radioactivity monitor, an alarm is adjustable to actuate upon detection of a severalfold increase.

Assuming that corrosion and activation product concentration in the reactor coolant is $2x10^{-1}$ μ Ci /g (Na-24,Cr-51,Zr-65,Mn-54,56, Co-58,60, Fe-55,59) and the distribution coefficient is 0.3, after leak occurrence, a leak rate of 1gpm can be detected within one hour.

5.2.5.4.1.3 Containment Airborne Gaseous Radioactivity Monitor

In US-APWR, this monitor corresponds to the containment radiation monitor (RMS-RE-41). Refer to Chapter 11, Subsection 11.5.2. The containment airborne gaseous radioactivity monitor measures the radiation level in the gas stream from the containment atmosphere. This monitor is equipped with the scintillation monitor, which performs continuous sampling taken from the air inside the containment to outside the containment and continuously measures the sample gas after passing through the containment airborne particulate radioactivity monitor. The measured gas returns to inside the containment. The sensitivity of the monitor is 5 $x10^{-7}$ μ Ci /cm^3. The counting rate of the monitor is provided to the MCR and recorded.

Assuming that Xe-133 concentration in the reactor coolant is 3.2 μ Ci /g, after leak occurrence, a leak rate of 1 gpm can be detected within one hour.

This monitor is qualified for seismic events not requiring a plant shutdown.

5.2.5.4.1.4 Containment Air Cooler Condensate Flow Rate Monitoring System

The containment air cooler condensate flow rate monitoring system consists of a containment cooler drain collection header, a vertical standpipe, valves, and standpipe level instrumentation. The monitoring system collects the condensate from the cooling coils of the containment recirculation unit coolers and CRDM cooling unit and enables volume measurements. Both humidity in the containment and the collected condensate which start to increase are associated with indication of leakage. Under equilibrium state, the fluid volume, which condenses in HVAC units inside the containment, is equivalent to evaporated primary coolant volume at the leak source. The condensation from the containment air coolers flows via the collection header to the vertical standpipe. A differential pressure transmitter provides standpipe level signals. The system provides measurements of low leakages by monitoring standpipe level increase versus time. The condensate flow rate is recorded and high alarms are provided in the MCR.

The humidity at the inlet of the HVAC unit cooling coil inside the containment starts to increase by vapor generated from the leak source resulting in the condensate volume increase. During normal operation, leakage of 1gpm can be detected within one hour of occurrence since containment recirculation fans sufficiently circulate the air inside the containment.

This monitoring system is qualified for seismic events not requiring a plant shutdown.

5.2.5.4.2 Additional Unidentified Leakage Detection Methods

A. Charging Pump Operation

During normal operation, one of the charging pumps is in operation. If a gross increase in reactor coolant leakage occurred, the flow rate of the charging pump would increase, indicating leakage from the RCS. This leakage would cause a decrease in the volume control tank level. The flow rate of the charging pump would automatically increase to

maintain pressurizer level. The indications of charging flow rate and volume control tank level are provided in the MCR.

The leakage rate can be determined by the amount that charging flow rate increases above the letdown flow rate to maintain constant pressurizer level. Any significant increase in the charging flow rate is a possible indication of a leak.

B. Containment Humidity Monitoring

The containment humidity monitoring system, utilizing temperature-compensated humidity detectors, is provided to determine the water-vapor content of the containment atmosphere. An increase in the humidity of the containment atmosphere indicates a release of water within the containment. A rapid increase of humidity indicates the possibility of a leak.

C. Liquid Inventory

Operators can surmise gross leakage from changes in the reactor coolant inventory. A significant decrease in the pressurizer level not associated with known changes in plant conditions is investigated. Makeup water usage information which is available from the plant computer is checked on a regular basis for unusual makeup rates not attributed to plant conditions.

5.2.5.5 Safety Evaluation

Leak detection monitoring has no safety-related function. The containment airborne particulate radioactivity monitor system is seismic category I.
The containment airborne gaseous radioactivity monitor, the containment air cooler condensate flow rate monitoring system and the containment sump level and flow monitoring system are qualified for seismic events not requiring a plant shutdown.

5.2.5.6 Instrumentation Applications

The following leak detection systems instruments will provide the indications of reactor pressure boundary leakage in the MCR with alarms. The alarms will alert the operating personnel to monitor for leakage. Procedures for converting various indications to a common leakage equivalent will be available to operating personnel. Monitors for items A through D below are provided in gallon per minute leakage equivalent.

A. Containment airborne particulate radioactivity monitor

(Containment radiation monitor, RMS-RE-40) - airborne particulate radioactivity

B. Containment airborne gaseous radioactivity monitor

(Containment radiation monitor, RMS-RE-41) - airborne gaseous radioactivity

C. Containment air cooler condensate flow rate monitoring system - standpipe level

D. Containment sump level and flow monitoring system – sump level

E. Gross leakage detection methods - charging flow rate, letdown flow rate, pressurizer level, VCT level and reactor coolant temperatures are available as inputs for detection by RCS inventory balance. Containment sump levels and pump operation are also available. Total makeup water flow is available from the plant computer for liquid inventory.

F. Containment temperature, pressure, and humidity will only have readouts in the MCR and alarms to indicate occurrence of leakage within the containment. This method is used only to detect leaks and is not used to quantity leak rates.

5.2.5.7 Testing, Calibration and Inspection Requirements

Periodic testing of leakage detection systems is conducted to verify the operability and sensitivity of detection equipment. These tests include installation calibrations and alignments, periodic channel calibrations, functional tests, and channel checks. A description of testing and calibration for the containment radioactivity monitoring system is presented in Subsection 11.5.2.

Periodic inspection of the floor drainage system to the containment sump is conducted to check for blockage and ensure unobstructed pathways.

The containment humidity monitoring systems and the containment air cooler condensate flow rate monitoring system are also periodically tested to ensure proper operation and verify sensitivity.

In service inspection criteria, equipment used, procedures, frequency of testing, inspection, surveillance, and examination of the structural and leak-tight integrity of RCPB components are described in Subsection 5.2.4.

5.2.5.8 Limits for Reactor Coolant Leakage Rates within the RCPB

In accordance with the position 9 of regulatory guide 1.45 the limiting condition for identified and unidentified reactor coolant leakages are identified in the Chapter 16. Subsections 3.4.13 addresses RCS leak limits. Subsection 3.4.15 addresses RCS leak detection instrument requirements.

5.2.6 Combined License Information

COL 5.2(1) *ASME Code Cases that are approved in Regulatory Guide 1.84*

The COL applicant addresses the addition of ASME Code Cases that are approved in Regulatory Guide 1.84.

COL 5.2(2) *ASME Code Cases that are approved in Regulatory Guide 1.147*

The COL applicant addresses Code Cases invoked in connection with the inservice inspection program that are in compliance with Regulatory Guide 1.147.

COL 5.2(3) *ASME Code Cases that are approved in Regulatory Guide 1.192*

The COL applicant addresses Code cases invoked in connection with the operation and maintenance that are in compliance with Regulatory Guide 1.192.

COL 5.2(4) *Inservice inspection and testing program for the RCPB*

The COL applicant addresses and develops the inservice inspection and testing program for the RCPB, in accordance with Section XI of the ASME Code and 10 CFR 50.55a.

COL 5.2(5) *Preservice inspection and testing program for the RCPB*

The COL applicant addresses and develops the preservice inspection and testing program for the RCPB in accordance with Article NB-5280 of Section III, Division I of the ASME Code.

COL 5.2(6) *Deleted*

COL 5.2(7) *Deleted*

COL 5.2(8) *Deleted*

COL 5.2(9) *Deleted*

COL 5.2(10) *Safety and relief valve information*

The COL applicant addresses the actual throat area of the pressurizer safety valves and the CS/RHR pump suction relief valves.

5.2.7 References

5.2-1 Definitions, NRC Regulations Title 10, Code of Federal Regulations, 50.2.

5.2-2 Contents of Construction Permit and Operating License Applications; Technical Information, NRC Regulations Title 10, Code of Federal Regulations, 50.34.

5.2-3 Domestic Licensing of Production and Utilization Facilities, NRC Regulations Title 10, Code of Federal Regulations, 50.55a.

5.2-4 General Design Criteria for Nuclear Power Plants, NRC Regulations Title 10, Code of Federal Regulations, 50 Appendix A.

5.2-5 Fracture Toughness Requirements, NRC Regulations Title 10, Code of Federal Regulations, 50 Appendix G.

5.2-6 Quality Group Classifications and Standards for Water-, Steam-, and Radioactive-Waste-Containing Components of Nuclear Power Plants, Regulatory Guide 1.26, Rev. 4, March 2007.

5.2-7 Seismic Design Classification, Regulatory Guide 1.29, Rev.4, March 2007.

5.2-8 Control of Ferrite Content in Stainless Steel Weld Metal, Regulatory Guide 1.31, Rev. 3, April 1978.

5.2-9 Design, Fabrication, and Materials Code Case Acceptability, ASME Section III, Regulatory Guide 1.84, Rev. 34, October 2007.

5.2-10 Control of Electroslag Weld Properties, Regulatory Guide 1.34, Rev.0, December 1972.

5.2-11 Nonmentallic Thermal Insulation for Austenitic Stainless Steel, Regulatory Guide 1.36, Rev.0, February 1973.

5.2-12 Quality Assurance Requirements for Cleaning of Fluid Systems and Associated Components of Water-Cooled Nuclear Power Plants, Regulatory Guide 1.37, Rev. 1, March 2007.

5.2-13 Control of Stainless Steel Weld Cladding of Low-Alloy Steel Components, Regulatory Guide 1.43, Rev.0, May 1973.

5.2-14 Control of the Use of Sensitized Stainless Steel, Regulatory Guide 1.44, Rev.0, May 1973.

5.2-15 Reactor Coolant Pressure Boundary Leakage Detection Systems, Regulatory Guide 1.45, Rev.0, May 1973.

5.2-16 Materials and Inspections for Reactor Vessel Closure Studs, Regulatory Guide 1.65, Rev. 0, October 1973.

5.2-17 Welder Qualification for Areas of Limited Accessibility, Regulatory Guide 1.71, Rev. 1, March 2007.

5.2-18 Inservice Inspection Code Case Acceptability, ASME Section XI, Division 1, Regulatory Guide 1.147, Rev. 15, October 2007.

5.2-19 Deleted

5.2-20 Operation and Maintenance Code Case Acceptability, ASME OM Code, Regulatory Guide 1.192, Rev. 0, June 2003.

5.2-21 Materials, ASME Boiler and Pressure Vessel Code, Section II, ASME, 2001 Edition with 2003 Addenda.

5.2-22 Rules for Construction of Nuclear Power Plant Components, ASME Boiler and Pressure Vessel Code, Section III, ASME, 2001 Edition with 2003 Addenda.

5.2-23 Nondestructive Examination, ASME Boiler and Pressure Vessel Code, Sec.V, ASME, 2001 Edition with 2003 Addenda.

5.2-24 Welding and Blazing Qualifications, ASME Boiler and Pressure Vessel Code Section IX, ASME.

5.2-25 Rules for Inservice Inspection of Nuclear Power Plant Components, ASME Boiler and Pressure Vessel Code Section XI, ASME, 2001 Edition with 2003 Addenda.

5.2-26 Standard Specification for Thermal Insulation for Use in Contact with Austenitic Stainless Steel, ASTM C 795-03, Rev. 0, November 2003.

5.2-27 EPRI Primary Water Chemistry Guidelines, Revision 4, 2003.

5.2-28 R.Kume, H.Okabayashi, M.Amano, Susceptibility to Underclad Cracking in Relation to Chemical Composition, Transactions of ASME, October 1976.

5.2-29 R.Kume, H.Okabayashi, M.Amano, Mechanism of Underclad Cracking – Combined Effects of Residual Strain and Heat-Affected Zone Ductility, Transactions of ASME, October 1976.

5.2-30 K.Arioka, et. Al.,The effects of boric acid, solution temperature, and sensitization on SCC behavior under elevated temperature water, Corrosion, 1983.

5.2-31 D.Feron, J.-M.Olive, Corrosion issues in light water reactors, Stress Corrosion Cracking, European Federation of Corrosion Publications Number 51.

5.2-32 T.Kusakabe, et. al., Research on Corrosion Resistance of Steam Generator Tube, MHI Technical Review, Vol.33 No.1, February 1996.

5.2-33 S.Asada, et. Al.,PWSCC Life Time Evaluation on Alloy 690, 52 and 152 for PWR Materials, EPRI PWSCC of Alloy 600, 2007 International Conference & Exhibition.

5.2-34 Contents of Applications; Technical Information, NRC Regulations Title 10, Code of Federal Regulations, 50.47.

5.2-35 Operation and Maintenance Code Case Acceptability, ASME OM Code.

5.2-36 US-APWR Sump Strainer Performance, MUAP-08001, Revision 1, September 2008.

5.2-37 Boric Acid Corrosion of Carbon Steel Reactor Pressure Boundary Components in PWR Plants, Generic Letter 88-05, March 17. 1998.

5.3 Reactor Vessel

5.3.1 Reactor Vessel Materials

The US-APWR reactor vessel satisfies the following requirements:

- General Design Criteria (GDC) 1 and 30 (Ref. 5.3-4): for quality standards concerning design, fabrication, erection, and testing of structures, systems and components;
- GDC 4: for compatibility of components with applicable environmental conditions;
- GDC 14: for prevention of rapidly propagating fractures in the pressure boundary;
- GDC 31: for material fracture toughness;
- GDC 32: for materials surveillance program;
- 10 CFR 50.55a (Ref. 5.3-1): for quality standards concerning design, and determination and monitoring of fracture toughness;
- 10 CFR 50.60 (Ref. 5.3-2): for reactor coolant pressure boundary (RCPB) fracture toughness and material surveillance requirements of 10 CFR 50, Appendix G (Ref. 5.3-6) and Appendix H (Ref. 5.3-7);
- 10 CFR 50 Appendix B (Ref. 5.3-5), Criterion XIII: for material cleaning control at site;
- 10 CFR 50 Appendix G (Ref. 5.3-6): for material testing and acceptance criteria for fracture toughness; and
- 10 CFR 50 Appendix H (Ref. 5.3-7): for determination and monitoring of fracture toughness.

The following sections describe how the specific criteria satisfy the applicable requirements.

5.3.1.1 Material Specifications

Material specifications for the reactor vessel pressure boundary satisfy the requirements of ASME Code Section III (Ref. 5.3-20) and Section II (Ref. 5.3-19). The materials applied are those identified in ASME Code Section III Appendix I, and are listed in Table 5.2.3-1. Details concerning the specifications are provided in Subsection 5.2.3.

Ferritic reactor vessel pressure boundary materials satisfy the fracture toughness requirements of 10 CFR 50 Appendix G.

In order to reduce effects of irradiation embrittlement on beltline region ferritic base and weld material during plant operation, copper, nickel and phosphorus content are limited as shown in Table 5.3-1. For the US-APWR reactor vessel, the lower shell, the transition ring and the weld line between the lower shell and transition ring are fully or partially within the beltline region.

Verification of conformance with material specification requirements, including applicable requirements identified in Subsections 5.3.1.5 and 5.3.2, is identified as an ITAAC item.

5.3.1.2 Special Processes Used for Manufacturing and Fabrication

The reactor vessel is manufactured in accordance with ASME Code Section III requirements for Class 1 components. As required by ASME Code Section III NB-4100, manufacturing is carried out in accordance with NB-4000 using materials satisfying the requirements of NB-2000. When manufacturing is completed, the reactor vessel is certified as satisfying these requirements by application of the appropriate Code Stamp and completion of the appropriate data report in accordance with ASME Code Section III NCA-8000.

The reactor vessel is constructed mainly of low alloy steel forgings. The material specification of the pressure boundary forging is ASME Code Section II SA-508 Grade 3 Class 1. These forgings are heat treated by quenching and tempering, and fine grain size of five (5) or finer is required. Additional requirements applied to the forgings include vacuum degassing to lower the hydrogen level and improve the quality of the low alloy steel. Limits on chemical composition for beltline region materials are applied as described in Subsection 5.3.1.1.

Welding material for the reactor vessel conform to ASME Code Section III and the applicable welding specification, or satisfy requirements for other welding materials as permitted in ASME Code Section IX (Ref. 5.3-22). Details on the welding material specifications are provided in Subsection 5.2.3.

Welding of the pressure boundary parts of the reactor vessel is based on welding procedures qualified in accordance with requirements of ASME Code Sections III and IX. Qualification of the procedures includes tensile and impact tests to verify the weld material properties.

For stainless steel cladding, sampling during qualification of the welding procedure specification (WPS) ensures that the welding process will result in cladding satisfying the chemical composition requirements.

Avoidance of underclad cracking (UCC) for low alloy steels is explained in Subsection 5.2.3.3.2.

Welding processes such as gas tungsten arc welding (GTAW), gas metal arc welding (GMAW), shielded metal arc welding (SMAW), plasma arc welding (PAW) and submerged arc weld (SAW) processes are applied to fabricate the reactor vessel. Electroslag welding is also applied for cladding of the reactor vessel internal surfaces.

Where stainless steel and Ni-Cr-Fe alloy material are joined in the reactor vessel, Ni-Cr-Fe alloy weld metal is used.

Preheat requirements are specified for low alloy steel pressure boundary welds. These include maintaining preheat temperatures between the minimum preheat temperature and maximum interpass temperature specified in the WPS, as required by Regulatory Guide 1.50 (Ref. 5.3-13). All preheat temperatures for welding of reactor vessel pressure

boundary low alloy steel satisfies requirements of ASME Code Section III Appendix D, or is controlled in accordance with the WPS. Hydrogen is removed by either post-heating at a temperature and time sufficient to preclude the effects of hydrogen-assisted cracking, or by maintaining preheat until post-weld heat treatment is performed. Post-weld heat treatment of the welds is in accordance with ASME Code Section III NB-4620.

Severe sensitization of pressure boundary stainless steel material is controlled as described in Subsections 5.2.3.4 and 5.3.1.4.

The full penetration weld of the reactor vessel closure head is located taking into consideration accessibility for inservice inspection.

Once the reactor vessel is installed at the site, a field weld is made to attach the reactor vessel permanent cavity seal ring to the reactor vessel seal ledge.

5.3.1.3 Special Methods for Nondestructive Examination

During manufacturing of the reactor vessel pressure boundary materials, nondestructive examinations (NDE) are carried out to satisfy ASME Code Section III NB-2500 requirements.

For the reactor vessel, NDE of materials and welds are conducted in accordance with the requirements of ASME Code Section III NB-5200. Preservice examinations are also carried out to satisfy requirements of ASME Code Section XI (Ref. 5.3-23). Acceptance standards for the NDE during manufacturing are in accordance with ASME Code Section III NB-5300, while acceptance standards for preservice examinations are in accordance with ASME Code Section XI IWB-3100.

Tables 5.3-2 and 5.3-3 show the NDE to be applied for the reactor vessel.

Details for NDE requirements of the reactor vessel that are in addition to those described above are provided below.

5.3.1.3.1 Ultrasonic Examination

For the major pressure boundary forgings of the reactor vessel, excluding the stud bolts, in addition to straight beam ultrasonic examinations required by the ASME Code Section III, angle beam examinations are also carried out for accessible areas during manufacturing of the forgings. These examinations are carried out in order to detect discontinuities that may not be detected by straight beam examinations. Examination requirements for the stud bolts are detailed in Subsection 5.3.1.7.

During fabrication, in addition to the NDE requirements of ASME Code Section III, full penetration ferritic pressure boundary welds of the reactor vessel are examined by ultrasonic examination methods. These examinations are carried out in accordance with, and satisfy the requirements of ASME Code Section XI. The timing of the NDE is after intermediate heat treatment, but prior to final postweld heat treatment.

5.3.1.3.2 Liquid Penetrant Examination

Additional liquid penetrant examination is applied to the attachment welds between the radial supports and transition ring, after back-chipping and after each 0.5 inch of weld metal depth. The procedure and acceptance standards are in accordance with ASME Code Section III.

5.3.1.3.3 Magnetic Particle Examination

The following additional magnetic particle examinations are applied for the following reactor vessel pressure boundary welds. Acceptance standards are in accordance with ASME Code Section III.

- For attachment welds of ferritic material such as those between the lifting lugs and the top head dome, examinations are carried out after the first weld layer and after each 0.5 inch of weld depth thereafter.
- After back-chipping is applied to full penetration ferritic pressure boundary welds, the back-chipped areas are examined.

5.3.1.4 Special Controls for Ferritic and Austenitic Stainless Steels

Subsection 5.2.3 describes details concerning controls for welding of ferritic and austenitic stainless steels. Conformance to applicable Regulatory Guides for the reactor vessel is summarized below.

5.3.1.4.1 Regulatory Guide 1.31: Control of Stainless Steel Welding

Regarding Regulatory Guide 1.31 (Ref. 5.3-8), the controls that are applied for stainless steel welding are discussed in Subsection 5.2.3.4.

5.3.1.4.2 Regulatory Guide 1.34: Control of Electroslag Weld Properties

Requirements of Regulatory Guide 1.34 (Ref. 5.3-9) are not applicable for the US-APWR reactor vessel, as electroslag welding is not employed in structural welds of low alloy steel. Electroslag welding is only applied for cladding.

5.3.1.4.3 Regulatory Guide 1.37: Quality Assurance Requirements for Cleaning of Fluid Systems and Associated Components of Water-Cooled Nuclear Power Plants

Written procedures are prepared for final cleaning of the reactor vessel to be carried out at the end of fabrication. Cleaning of the reactor vessel at site is also carried out in accordance with written procedures.

These procedures ensure that the reactor vessel is not contaminated by detrimental materials. For stainless steel, the procedures control cleanliness to degrees equivalent to those required by Regulatory Guide 1.37 (Ref. 5.3-10) and prohibit contact with low melting point compounds that could cause stress corrosion cracking.

5.3.1.4.4 Regulatory Guide 1.43: Control of Stainless Steel Weld Cladding of Low Alloy Steel Components

The forgings for the US-APWR reactor vessel are SA-508 Grade 3 Class 1 material. Applicability of controls specified in Regulatory Guide 1.43 (Ref. 5.3-11) for prevention of UCC when weld cladding this material are discussed in Subsection 5.2.3.3.2.

5.3.1.4.5 Regulatory Guide 1.44: Control of the Use of Sensitized Stainless Steel

The use of sensitized stainless steel material is controlled by solution heat treatment of stainless steel materials. In addition, controls are also applied to water chemistry and tools for abrasive work in order to avoid intergranular stress corrosion cracking. Details including compliance with Regulatory Guide 1.44 (Ref. 5.3-12) are described in Subsection 5.2.3.4.

5.3.1.4.6 Regulatory Guide 1.50: Control of Preheat Temperature for Welding Low Alloy Steel

Requirements of Regulatory Guide 1.50 (Ref. 5.3-13) are applied as follows:

- Preheat temperatures for welding low alloy steels satisfy requirements of ASME Code Section III Appendix D, or are controlled in accordance with the applicable WPS.
- Hydrogen is removed by either post-heating for an extended time, or by maintaining preheat until post-weld heat treatment is performed.
- Minimum preheat and maximum interpass temperatures are specified and controlled.
- Volumetric NDE are carried out for pressure boundary welds as required by ASME Code Section III.

5.3.1.4.7 Regulatory Guide 1.71: Welder Qualification for Areas of Limited Accessibility

Subsection 5.2.3.3.2 describes the applicability of Regulatory Guide 1.71 (Ref. 5.3-15).

5.3.1.4.8 Regulatory Guide 1.99: Effects of Residual Elements on Predicted Radiation Damage to Reactor Pressure Vessel Materials

Predictions of reference temperature and upper shelf energy (USE) changes are made in accordance with the requirements of this Regulatory Guide 1.99 (Ref. 5.3-16).

5.3.1.4.9 Regulatory Guide 1.190: Calculational and Dosimetry Methods for Determining Pressure Vessel Neutron Fluence

Measurements and calculations for neutron fluence are carried out in accordance with Regulatory Guide 1.190 (Ref. 5.3-17).

5.3.1.5 Fracture Toughness

The US-APWR reactor vessel complies with the fracture toughness requirements of 10 CFR 50 Appendix G (Ref. 5.3-6) and ASME Code Section III, as described in the following sections. Requirements concerning specific temperature and pressure limits for plant operation in 10 CFR 50 Appendix G (Ref. 5.3-6) are also satisfied, and these are discussed in detail in Subsection 5.3.2. Compliance with 10 CFR 50 Appendix H (Ref. 5.3-7) is required for beltline region forgings and welds. This is discussed in Subsection 5.3.1.6.

5.3.1.5.1 Test Coupons and Test Specimens

Material test coupons and test specimens are removed from the production material of ferritic pressure boundary forgings in accordance with ASME Code Section III NB-2220. Simulated post-weld heat treatment is performed on the test coupons as required in ASME Code Section III NB-2210.

Test specimens are located and oriented in accordance with the requirements of ASME Code Section III NB-2322. For forging material, except for bolting, the charpy V-notch (CVN) impact specimens are oriented normal to the principal working direction. For bolting and bars, axial test specimens are used.

5.3.1.5.2 Testing Procedures

Impact test procedures of the reactor vessel pressure boundary ferritic material are in accordance with ASME Code Section III NB-2320. NB-2350 and NB-2360 state requirements for retesting and calibration of test equipment, respectively. Qualification of test personnel and retention of records also comply with the applicable requirements of the ASME Code.

5.3.1.5.3 Test Requirements and Acceptance Standards

Impact test requirements for the reactor vessel pressure boundary ferritic materials are in accordance with ASME Code Section III NB-2330.

The reference nil ductility temperature (RT_{NDT}) for each of these materials is determined by first determining a T_{NDT} through a drop weight test. Next, CVN tests are carried out at temperatures not greater than T_{NDT} + 60°F. Where the CVN test results exhibit at least 35 mils of lateral expansion and not less than 50 ft-lbs of absorbed energy, the T_{NDT} is defined as the reference temperature, RT_{NDT}. The maximum value for this RT_{NDT} for reactor vessel pressure boundary ferritic materials is 10°F.

Additional fracture toughness requirements, including those for the beltline region materials, are described below.

5.3.1.5.4 Reference Temperature RT_{NDT} for Beltline Region Material

The maximum RT_{NDT} for the reactor vessel beltline region ferritic materials is 0°F for forgings and -20°F for weld materials. The tests for these RT_{NDT} values are in accordance with ASME Code Section III, as described in Subsection 5.3.1.5.3.

Degredation of the beltline region materials due to neutron irradiation is taken into account by the methods of Regulatory Guide 1.99 (Ref. 5.3-16). Details are provided in Subsection 5.3.2.1.

5.3.1.5.5 CVN Curves for the Beltline Region Material

Full transverse CVN curves are generated for beltline region base and weld material. A minimum of three specimens are tested in the upper shelf region (100% shear). In accordance with the requirements of 10 CFR 50 Appendix G (Ref. 5.3-6), the minimum initial USE for beltline region base material in the transverse direction and weld material along the weld is 75 ft-lb.

The predicted charpy USE at the end of the reactor vessel life is estimated using Regulatory Guide 1.99 (Ref. 5.3-16), and expected to be greater than 50 ft-lb, as required by 10 CFR 50 Appendix G (Ref. 5.3-6), at 1/4-thickness (1/4-T) of the reactor vessel beltline region shell. See Subsection 5.3.2.4 for additional details concerning the change in USE due to irradiation.

5.3.1.5.6 1/2-T Compact Tension Fracture Toughness Test Requirements for the Beltline Region Material

1/2-T compact tension (CT) fracture toughness test specimens are included as part of the material surveillance program for the reactor vessel, as described in Subsection 5.3.1.6. In order to determine the unirradiated K_{Ic} properties for the reactor vessel beltline region materials, 1/2-T CT fracture toughness tests are carried out in accordance with applicable ASTM standards such as ASTM E-399 (Ref. 5.3-25) and E-1820 (Ref. 5.3-26).

5.3.1.5.7 Stud Bolt Material

Requirements for stud bolt material, including nuts and washers, are described in Subsection 5.3.1.7.

5.3.1.6 Material Surveillance

The material surveillance program for the reactor vessel evaluates radiation damage based on pre-irradiation drop-weight, CVN, tensile and 1/2-T CT fracture toughness test specimens, and post-irradiation testing of CVN, tensile and 1/2-T CT fracture toughness test specimens. The program aims to evaluate the effects of radiation on the fracture toughness properties of reactor vessel ferritic pressure boundary materials by the transition temperature and fracture mechanics approach, in accordance with ASTM E-185 (Ref. 5.3-24) and 10 CFR 50 Appendix H (Ref. 5.3-7). 1/2-T CT fracture toughness test specimens are included as they will provide additional information concerning the pressure-temperature (P-T) limits of the reactor vessel beltline materials.

Implementation of the reactor vessel material surveillance program for a specific plant is addressed by the COL applicant.

5.3.1.6.1 Surveillance Capsules

The surveillance program for the reactor vessel consists of six capsules. The capsules include test specimens for the reactor vessel weld metal, base metal and heat affected zone (HAZ) metal.

Test specimens for the base metal are taken from locations near the fracture toughness test specimens required in Subsection 5.3.1.5, and are oriented in both the longitudinal and transverse direction compared to the principal forging direction of the forging material. Weld test plates for surveillance program specimens have their principal working direction parallel to the weld line so that specimens for the HAZ area are normal to the principal working direction.

Taking into consideration the minimum number of test specimens required by ASTM E-185 (Ref. 5.3-24), as referenced by 10 CFR 50 Appendix H (Ref. 5.3-7), a minimum of 9 tensile test specimens, 48 CVN test specimens and 6 CT fracture test specimens are contained in each capsule. The test specimens are enclosed in stainless steel sheaths to protect against corrosion.

Dosimeters and thermal monitors are also included in the capsules. The dosimeters are used to evaluate the neutron exposure experienced by the test specimens and reactor vessel shell. The thermal monitors consist of low melting point alloys that are used to monitor the maximum temperature of the test specimens. In accordance with Regulatory Guide 1.190 (Ref. 5.3-17), the following dosimeters and thermal monitors are included in the capsules.

- Dosimeters
  - (a) Iron
  - (b) Copper
  - (c) Nickel
  - (d) Titanium
  - (e) Niobium
  - (f) Cobalt-aluminum (0.15% cobalt)
  - (g) Cobalt-aluminum (cadmium shielded)
  - (h) Uranium-238 (cadmium shielded)
  - (i) Neptunium-237 (cadmium shielded)
- Thermal Monitors
  - (a) 97.5% lead, 2.5% silver, (579°F melting point)
  - (b) 97.5% lead, 1.75% silver, 0.75% tin (590°F melting point)

Once the test specimens, dosimeters and thermal monitors are assembled into the capsules, the capsules are sealed and leak tested. These capsules are located in guide baskets, which are attached to the outside of the core barrel. The guide brackets allow the

removal and reinsertion of capsules, and are designed to retain the capsules in position throughout any anticipated event during the reactor vessel lifetime. The guide baskets are located at the orientation shown in Figure 5.3-1 so that the lead factors (ratio of the neutron flux at the location of the capsule to that at the reactor vessel inner surface at the peak fluence location) of the surveillance capsules are between 2 and 3. This range for the lead factors is specified to monitor the embrittlement properties of the reactor vessel materials in the future, and takes into consideration the recommendations of ASTM E-185 (Ref. 5.3-24). The calculated lead factors of the capsules for the US-APWR reactor vessel are 2.7 for two (2) capsules (Type A), 2.4 for two (2) capsules (Type B) and 2.1 for two (2) capsules (Type C). Plant-specific orientation and the resulting lead factors for the capsules will be addressed by the COL applicant for each plant.

A recommended general capsule withdrawal schedule for the US-APWR reactor vessel surveillance program is provided below. The schedule follows the requirements of ASTM E-185 (Ref. 5.3-24) as required by 10 CFR 50 Appendix H (Ref. 5.3-7). ASTM E-185 (Ref. 5.3-24) recommends the capsule withdrawal schedule for a design life of 32 effective full power years (EFPY). The minimum number of capsule withdrawal sequences is three (3), as the maximum predicted reference nil ductility temperature shift (ΔRT_{NDT}) at the US-APWR reactor vessel inner surface after 32EFPY is below 100°F. The data for the fluence at the reactor vessel inner surface for 60EFPY can be obtained from the 3rd capsule sequence at approximately 29EFPY. In addition, the three standby capsules are available to obtain supplemental data for further investigation of the irradiation embrittlement trend. The use of such capsules and their withdrawal schedule will be addressed by the COL applicant for each plant.

Sequence	Capsule Type	Withdrawal Schedule	Note
1st	A	Approx. 3 EFPY	At the time when the predicted ΔRT_{NDT} of the capsule material is approximately 50°F.
2nd	A	Approx. 12 EFPY	At the time when the accumulated neutron fluence of the capsule corresponds to the approximate 32EFPY fluence at the reactor vessel inner wall location.
3rd	C	Approx. 29 EFPY	At the time when the accumulated neutron fluence of the capsule corresponds to the peak fluence 60EFPY (not less than once or greater than twice the 32EFPY) at the reactor vessel inner wall location.
4th	B or C	Standby	Supplemental
5th	B or C	Standby	Supplemental
6th	B or C	Standby	Supplemental

Accelerated irradiation capsules as defined in ASTM E-185 (Ref. 5.3-24) and integrated surveillance programs for multiple reactors at a single site are not part of the above general US-APWR reactor material surveillance program. Applications of these programs,

if any, will be addressed by the COL applicant in the reactor vessel material surveillance program for a specific plant.

5.3.1.6.2 Neutron Flux and Fluence Calculations

Calculation methods for the neutron flux and fluence are described in Subsection 4.3.2.8. The results for the beltline region base material and weld are shown in Table 5.3-5.

5.3.1.6.3 Predicted Effects of Radiation on Beltline Region Materials

Compared to the reactor vessel shell, the test specimens in the capsules experience higher neutron exposure. Since the test specimens are also sample materials from the actual beltline region material, the transition temperature shifts measured in the specimens represent future vessel material properties.

Predictions for the changes in transition temperature and USE are calculated in accordance with the requirements of Regulatory Guide 1.99 (Ref. 5.3-16). Reference temperatures are determined in accordance with 10 CFR 50 Appendix G (Ref. 5.3-6) and ASME Code Sec. III NB-2330.

Estimates for irradiation effects are carried out with the chemical composition specifications for the beltline region materials shown in Table 5.3-1. The calculated estimates for the reference temperature and USE at the end-of-life (EOL) of the plant are shown in Table 5.3-4.

5.3.1.7 Reactor Vessel Fasteners

Section 3.13 provides a general discussion concerning ASME Code Class 1 threaded fasteners, including those for the reactor vessel.

The threaded fasteners for the reactor vessel are the stud bolts, nuts and washers that attach the reactor vessel closure head flange to the vessel flange. The bottom ends of the stud bolts are threaded and installed into threaded holes machined in the vessel flange. The upper ends of the stud bolts are also threaded to install the nuts. Washers are inserted between the nuts and closure head flange. The stud bolts are preloaded by sequential tensioning with stud bolt tensioners.

The reactor vessel stud bolts, nuts and washers are ASME Code Section III Class 1 components. Design and analyses are carried out in accordance with requirements of ASME Code Section III.

Regulatory Guide 1.65 (Ref. 5.3-14) defines acceptable materials and testing procedures for reactor vessel stud bolts.

The stud bolts, nuts, and washers are ASME Code Section II SA-540 Grade B24 material, and satisfy the fracture toughness requirements of ASME Code Section III and 10 CFR 50 Appendix G (Ref. 5.3-6). The allowable ultimate tensile strength is between 145 ksi and 170 ksi, and CVN impact test requirements specified in ASME Code Section III NB-2333 are satisfied. Specifically, the lowest absorbed energy is greater than 45 ft-lb, and the lowest lateral expansion is greater than 0.025 in. Hardness tests are also performed to

show that proper heat treatment has been performed. The surface Brinell hardness shall be min. 302 HB to max. 311 HB.

NDE are carried out in accordance with ASME Code Section III requirements. Material for stud bolts, nuts and washers are ultrasonically examined in accordance with ASME Code Section III NB-2580, after final heat treatment but prior to machining of the threads. NDE procedures prepared for use are considered to be fully adequate to ensure proper material quality, based on compliance with the applicable requirements of ASME Code Section III NB-2580.

The stud bolt surfaces are examined by straight beam ultrasonic examinations in two directions, in accordance with ASME Code Section III and SA-388. Surface examinations are carried out in accordance with ASME Code Section III NB-2583 after final heat treatment and threading.

For removal of the reactor vessel closure head during refueling, the reactor vessel stud bolts, nuts, and washers are removed from the closure head and placed in storage racks. The storage racks are then removed from the refueling cavity and stored in a specified location on the containment operating deck. As an alternative, the studs bolts, nuts, and washers may be lifted out of the stud bolt holes of the reactor vessel closure head and a support collar inserted into place, after which the head assembly is removed. In this case, the stud bolts, nuts, and washers are lifted and stored with the reactor vessel closure head. In either of the methods, the stud bolts are not exposed to the refueling cavity water.

Closure plugs are used to seal the stud holes in the vessel flange before removing the reactor vessel closure head, preventing refueling water from entering the stud holes.

Manganese base phosphate surfacing treatment is also applied to the surfaces of the stud bolts for added protection against the possibility of corrosion.

Typical lubricants applied for the reactor vessel stud bolts include Fel-Pro N-5000. Detailed discussions concerning lubricants for ASME Code Class 1 threaded fasteners are provided in Section 3.13.

5.3.2 Pressure-Temperature Limits, Pressurized Thermal Shock, and Charpy Upper Shelf Energy Data and Analyses

The following regulatory requirements concerning P-T limits on the reactor vessel pressure boundary are considered.

- 10 CFR 50.55a (Ref. 5.3-1): structure, system, and component (SSC) are to be designed, fabricated, erected, constructed, tested and inspected to quality standards appropriate to the importance of the safety function to be performed.
- 10 CFR 50.60 (Ref. 5.3-2): compliance with the requirements of 10 CFR 50 Appendices G and H.
- 10 CFR 50.61 (Ref. 5.3-3): satisfy fracture toughness criteria relevant to pressurized thermal shock (PTS) events.

- 10 CFR 50 Appendix G (Ref. 5.3-6): consider material testing and fracture toughness requirements.
- GDC 1: codes and standards applied so that safety functions of quality products are identified and evaluated to determine their adequacy.
- GDC 14: RCPB is to be designed, fabricated, erected, and tested so that the probability of abnormal leakage, rapid failure, and gross rupture is extremely low.
- GDC 31: RCPB is to be designed with sufficient margin to assure that when stresses from operating, maintenance and testing, and postulated accident conditions are considered, the boundary behaves in a non-brittle manner and the probability of rapidly propagating fracture is minimized.
- GDC 32: assess the structural integrity of the reactor vessel during operation with an appropriate material surveillance program for the reactor vessel beltline region pressure boundary materials.

Details concerning the specific requirements are discussed in the following sections.

5.3.2.1 Limit Curves

Heatup and cooldown P-T limit curves are established in order to protect the reactor vessel during startup and shutdown by minimizing the possibility of fast fracture. The methods outlined in ASME Code Section XI Appendix G, including defect sizes and safety factors, are applied in the analyses for protection against non-ductile failure. ASME Code Section XI Appendix G is applied rather than ASME Code Section III Appendix G, as it is referenced by 10 CFR 50 Appendix G (Ref. 5.3-6) and also incorporates several ASME code cases including N-588, N-640 and N-641.

Representative P-T limit curves for the US-APWR up to 60EFPY, conservative based on the design life of 60 years, are shown in Figures 5.3-2 and 5.3-3. These curves are generated using the applicable data shown in Table 5.3-5. The COL applicant will address curves developed in accordance with plant-specific data.

Beltline region material properties degrade with radiation exposure. The degradation is measured in terms of the adjusted reference nil ductility temperature, which includes a ΔRT_{NDT}, initial RT_{NDT} and margin.

Adjusted reference temperatures taking into account the effects of irradiation in the reactor vessel beltline region are determined based on the chemical composition limits, and used in combination with each peak fluence value for the base material and weld. As the minimum operating temperature for the reactor vessel is 550.6°F, which is greater than 525°F, the methodology of Regulatory Guide 1.99 (Ref. 5.3-16) for nominal embrittlement is applied. This is conservative since the actual RT_{NDT} values and chemical compositions are normally lower than the specified limits.

Margins for the adjusted reference temperature calculation are as defined in Regulatory Guide 1.99 (Ref. 5.3-16).

The results of the material surveillance program described in Subsection 5.3.1.6 will be used to verify the validity of ΔRT_{NDT} that is the basis for the developed P-T limit curves. As

the surveillance capsule results become available, the projected fluence and the RT_{NDT} calculations will be adjusted if necessary. The development of new P-T curves may become necessary from these adjustments.

The detailed procedure for determining the P-T limits for preservice hydrostatic, inservice leak and hydrostatic, heatup and cooldown operations, and core critical operation is described in the sections below.

5.3.2.1.1 P-T Limit Requirements

Following the procedures of NUREG-0800 Chapter 5 Subsection 5.3.2 (Ref. 5.3-18) and 10 CFR Part 50 Appendix G (Ref. 5.3-6), P-T limits for the reactor vessel are established to be at least as conservative as the following limits, including the margins of safety of ASME Code Section XI Appendix G:

P-T Limits for Preservice Hydrostatic Tests

For preservice hydrostatic tests prior to loading fuel in the reactor vessel, the minimum test temperature shall be greater than the highest reference temperature of the material in the closure flange region that is highly stressed by the stud bolt preload, plus 60°F.

P-T Limits for Inservice Leak and Hydrostatic Tests

For inservice leak and hydrostatic tests, the K_{Ic} of the material must be greater than 1.5 times K_{Im}, expressed as follows:

$1.5\ K_{Im} < K_{Ic}$

P-T Limits for Heatup and Cooldown Operations

For heatup and cooldown operations, the material's K_{Ic} must be greater than the sum of 2 times K_{Im} and the stress intensity factor caused by thermal gradients through the reactor vessel wall, shown by the following relationship:

$2 \times K_{Im} + K_{It} < K_{Ic}$

where,

K_{It} = stress intensity factor caused by thermal gradients ($ksi\sqrt{in}$)

P-T Limits for Core Critical Operation

When the reactor core is critical, the temperature must be higher than that required for inservice hydrostatic testing. In addition, the P-T limit margin over that required for heatup and cooldown operations is minimum 40°F.

5.3.2.1.2 Determination of K_{Ic}

K_{Ic} is provided in ASME Code Section XI Appendix G as a relationship of a metal temperature and RT_{NDT}. The analytical approximation is given by the following equation.

K_{Ic} = 33.2 + 20.734 exp [0.02(T − RT_{NDT})] (ksi$\sqrt{in}$)

where,

T = metal temperature (°F)

RT_{NDT} = reference nil ductility temperature at a specific time in the plant life, whose value takes into account irradiation embrittlement in accordance with Regulatory Guide 1.99 (Ref. 5.3-16) (°F)

5.3.2.1.3 Determination of K_{It}

K_{It} is determined in accordance with ASME Code Sec, XI Appendix G as shown below. Note that for hydrostatic and leak tests, K_{It} is equal to 0.

An inside surface defect is assumed at 1/4 the wall thickness from the inner wall surface (1/4-T), and the following relationship is applied:

$$K_{It} = (1.0359C_0 + 0.6322C_1 + 0.4753C_2 + 0.3855C_3)\sqrt{\pi a} \quad (\text{ksi}\sqrt{\text{in}})$$

An outside surface defect is also assumed at 1/4 the wall thickness from the outer wall surface (3/4-T), and the following relationship is applied:

$$K_{It} = (1.043C_0 + 0.630C_1 + 0.481C_2 + 0.401C_3)\sqrt{\pi a} \quad (\text{ksi}\sqrt{\text{in}})$$

The coefficients C_0, C_1, C_2 and C_3 above are determined from the thermal stress distribution at any specified time during the heatup or cooldown operations using the equation:

$$\sigma(x) = C_0 + C_1\left(\frac{x}{a}\right) + C_2\left(\frac{x}{a}\right)^2 + C_3\left(\frac{x}{a}\right)^3 \quad (\text{psi})$$

where,

x = variable representing the radial distance from the inside or outside surface to any point on the crack front of the defect (in)

a = maximum crack depth (in)

The radial position and time-dependent thermal hoop stress is calculated by the following equation for thermal stresses in hollow cylinders given by Timoshenko (Ref. 5.3-27).

$$\sigma_\theta(r,t) = \frac{E\alpha}{1-\upsilon}\frac{1}{r^2}\left(\frac{r^2 + R_i^2}{R_o^2 - R_i^2}\int_{R_i}^{R_o} T(r,t)rdr + \int_{R_i}^{r} T(r,t)rdr - T(r,t)r^2\right) \quad (\text{psi})$$

where,

E = modulus of elasticity at the average temperature (T_{ave})

α = coefficient of linear expansion at a time t

υ = Poisson's ratio

R_i = inner radius (in)

R_o = outer radius (in)

r = radial position (in)

The average temperature, T_{ave} for E above is determined by the following equation.

$$T_{ave} = \frac{\int_0^{t_{th}} T(r)dr}{\int_0^{t_{th}} dr}$$

where,

t_{th} = shell wall thickness (in)

The time-dependent metal temperature is determined by evaluating the following one-dimensional heat conduction equation.

$$\rho C \frac{\partial T}{\partial t} = \lambda \frac{1}{r} \frac{\partial}{\partial r}\left(r \frac{\partial T}{\partial r} \right)$$

where,

ρ = material density (lb/in^3)

C = material specific heat (Btu/(lb-°R))

λ = material thermal conductivity (Btu/(ft-h-°F))

T = local temperature (°F)

t = time (hr)

5.3.2.1.4 Determination of K_{Im}

K_{Im} is determined by the following equation in accordance with ASME Code Section XI Appendix G.

$$K_{Im} = M_m \times \left(\frac{PR_i}{t_{th}} \right) \quad \text{(psi)}$$

For inside (1/4-T) axial surface flaws, M_m is determined as follows:

$M_m = 1.85$ for $\sqrt{t_{th}} < 2$

$M_m = 0.926\sqrt{t_{th}}$ for $2 \le \sqrt{t_{th}} \le 3.464$

$M_m = 3.21$ for $\sqrt{t_{th}} > 3.464$

For outside (3/4-T) axial surface flaws, M_m is determined as follows:

$M_m = 1.77$ for $\sqrt{t_{th}} < 2$

$M_m = 0.893\sqrt{t_{th}}$ for $2 \le \sqrt{t_{th}} \le 3.464$

$M_m = 3.09$ for $\sqrt{t_{th}} > 3.464$

where,

P = Internal pressure (ksi)

5.3.2.1.5 Determination of P-T Limit Curves

Based on the relationships in Subsections 5.3.2.1.1 to 5.3.2.1.4, relationships can be established for the P-T limit curves. The relationship for heatup and cooldown operations is as follows.

$$P = \frac{K_{It} - K_{Im}}{2M_m\left(\frac{R_i}{R_o - R_i}\right)}$$

For heatup operation, the inner surface temperatures are higher than the outer surface temperatures, therefore stresses are in compression on the inner surfaces and in tension on the outer surfaces. However, since degredation due to irradiation is higher for the inner surfaces, the above equation is evaluated for both inner (1/4-T) and outer (3/4-T) surfaces, and the limiting pressures determine the limits of operation. For cooldown, only the inner (1/4-T) surfaces are evaluated as tension stresses occur on the inner surfaces, and effects of irradiation are also more conservative for the inner surfaces.

5.3.2.1.6 P-T Limits for Bolting of Stud Bolts

Minimum stud bolt and flange metal temperatures specified for preload tensioning and loosening of stud bolts is higher than those determined by the methods described in ASME Section XI Appendix G.

5.3.2.1.7 Reactor Vessel Annealing

Annealing of the reactor vessel at site for radiation embrittlement is not considered necessary as the vessel is predicted to maintain an equivalent safety margin in accordance with the procedures of 10 CFR 50 Appendix G (Ref. 5.3-6).

5.3.2.2 Operating Procedures

Subsection 5.3.2.1 describes the P-T limits that are not to be exceeded during any condition of normal operation, including anticipated operational occurrences (AOO) and system hydrostatic tests. These limits are applicable for the US-APWR up to plant EOL.

Plant operating procedures are established by the COL applicant so that actual transients do not exceed the established P-T limits. Details are discussed in Subsection 5.2.2.

5.3.2.3 Pressurized Thermal Shock

Areas of the reactor vessel such as the beltline region and primary coolant nozzles, where pressure boundary material may come into contact with water from the passive core cooling system, are further evaluated to ensure integrity under severe postulated transients such as loss-of-coolant, tube rupture or other similar emergency or faulted event that can produce relatively high thermal stresses.

For beltline region materials, a screening criterion is established in accordance with 10 CFR 50.61 (Ref. 5.3-3). The pressurized thermal shock reference temperature (RT_{PTS}) determined in accordance with the methods of 10 CFR 50.61 (Ref. 5.3-3) is not to exceed the screening criteria of 270°F for forgings and 300°F for weld materials.

The RT_{PTS} values for the US-APWR beltline region materials are calculated using the RT_{NDT} requirements of the materials, shown as the initial RT_{NDT} in Table 5.3-4, the fluence values at the inner diameter of the shell, as listed in Table 5.3-5, and the chemical composition requirements of the material, as shown in Table 5.3-1. The RT_{PTS} values at 60EFPY are listed in Table 5.3-4 and are below the PTS screening criteria.

Since the RT_{PTS} values at EOL are not expected to exceed the PTS screening criteria for the US-APWR reactor vessel, no additional safety analyses are expected to be required for reactor operation.

The RT_{PTS} values will be calculated based on plant-specific material property requirements, which will be verified by the COL applicant.

5.3.2.4 Upper Shelf Energy

The change in the USE due to radiation embrittlement for the US-APWR reactor vessel is predicted in accordance with the requirements of Regulatory Guide 1.99 (Ref. 5.3-16).

The calculations use the Table 5.3-1 specifications for copper in the reactor vessel beltline region weld and forging material. The neutron fluence is shown in Table 5.3-5.

The required initial and EOL USE are in accordance with 10 CFR 50 Appendix G (Ref. 5.3-6) and described in Subsection 5.3.1.5. The EOL USE for the US-APWR reactor vessel base material and weld are shown in Table 5.3-4, and satisfy the requirements of 10 CFR 50 Appendix G (Ref. 5.3-6).

The USE at EOL will be calculated based on plant-specific material property requirements, which will be verified by the COL applicant.

5.3.3 Reactor Vessel Integrity

The reactor vessel forms a part of the RCPB system. Design, fabrication, testing, and installation are carried out to satisfy the requirements of 10 CFR 50.55a (Ref. 5.3-1) and 50.61 (Ref. 5.3-3), as well as GDC 1, 4, 14, 30, 31 and 32 (Ref. 5.3-4). Design and fabrication of the reactor vessel also satisfy requirements of ASME Code Section III.

The safety design bases of the reactor vessel are as follows:

- The reactor vessel is a pressure boundary containing the reactor coolant. The reactor vessel also houses the heat generating reactor core and acts as a boundary against the release of fuel fission products.
- The reactor vessel properly locates and aligns the reactor internals.
- The reactor vessel supports the reactor internals and core, ensuring the core remains in a configuration where it can be properly cooled.
- By the interface with the reactor internals, the reactor vessel directs main coolant flow through the core.
- The reactor vessel properly locates and aligns the control rod drive mechanisms and in-core instrumentation system.
- The reactor vessel supports and aligns the integrated head package.
- The reactor vessel provides an effective seal between the refueling cavity and sump during refueling operations.
- The reactor vessel supports and locates the main coolant loop piping.
- By the interface with the reactor internals, the reactor vessel provides safety injection flow paths.

5.3.3.1 Design

Reactor Vessel

The reactor vessel is a pressure boundary component, designed and fabricated in accordance with ASME Code Section III requirements for Class 1 components, whose function is to support and enclose the reactor core internals. With the reactor core internals, the reactor vessel guides the flow of reactor coolant, and also maintains a volume of coolant around the core.

The reactor vessel is a vertical cylindrical pressure vessel, consisting of a vessel flange and upper shell, lower shell, transition ring, hemispherical bottom head and removable upper closure head.

The reactor vessel is fabricated by welding the vessel flange and upper shell, lower shell, transition ring and bottom head. The inlet, outlet and direct vessel injection (DVI) nozzles are welded to the upper shell. The main dimensions of the reactor vessel are shown in figures 5.3-4 and 5.3-5.

The closure head consists of a bolting flange and hemispherical top head dome. The top head dome has penetrations for the control rod drive mechanisms, in-core instrumentation systems and head vent.

Lifting lugs and support lugs for the integrated head package are welded to the outside of the closure head.

The length of the entire reactor vessel, including closure head, is approximately 44.4 feet. The inner diameter at the beltline region is 202.8 inches. The total weight of the reactor vessel (including closure head and stud bolts, but excluding control rod drive mechanisms) is approximately 640 tons.

Wetted surfaces during operation and refueling are clad with stainless steel weld overlay of nominal thickness of 0.2 inches. This includes the vessel shell flange top surface but does not include inside the stud bolt holes.

The design pressure and temperature for the US-APWR reactor vessel is 2,485 psig and 650°F. The design life is 60 years.

As an additional safety precaution, no penetrations are located below the top of the reactor core. This minimizes the potential for a loss of coolant accident by leakage from the reactor vessel, allowing the reactor core to be uncovered. The reactor core is also positioned inside the reactor vessel to limit reflood time in case of an accident. Radial support for the reactor internals is provided by key and keyway joints, located at the lower end of the reactor internals. Radial supports are located on the inner diameter of the reactor vessel and are equally spaced circumferentially.

The interface between the reactor vessel and reactor internals is such that the reactor coolant enters through the inlet nozzle, flows down through the annulus between the reactor vessel and reactor internals, and then flows upward through the core. In addition, in the case of a loss-of-coolant accident (LOCA), borated water is delivered through the DVI nozzles, flowing down the same annulus to the core.

A permanent cavity seal ring is welded to the top of the seal ledge of the vessel flange for welding to the refueling cavity seal liner. This ring provides a seal between the refueling cavity and sump during refueling.

The vessel flange also supports the reactor internals by an internal ledge that is machined into the top of the vessel flange.

The inner spherical radius of the bottom head is 104.7 inches. Radial supports for the reactor internals are attached to the transition ring at the elevation of the lower core support plate of the lower internals. The lower shell is a ring forging with a thickness of 10.4 inches and an inner diameter of 202.8 inches. The upper shell is also a large ring forging. Attached to this forging are four 31.0 inch inner diameter inlet nozzles, four 31.0 inch inner diameter outlet nozzles and four 3.44 inch inner diameter DVI nozzles. These nozzles are welded to the upper shell by either “set in” or “set on” construction. The inlet and outlet nozzles are located approximately 76.8 inches from the mating surface, and the DVI nozzles are approximately 90.2 inches from the mating surface.

Several welding processes are used for cladding depending on the location and configuration of the surface. These welding processes include electroslag, manual, automated gas tungsten arc, etc.

Welding material used for cladding of the inner shell areas by an automatic process is stainless steel type 308L. Where multiple cladding layers are required, the first layer is welding with type 309L.

The reactor vessel closure head is secured to the reactor vessel flange by 58 stud bolts and nuts, using stud tensioners. The reactor vessel closure head flange and reactor vessel flange is sealed by two metallic O-rings, which are designed to prevent leakage through the inner or outer O-ring at any operating condition. In case the inner O-ring fails and leakage occurs, a monitor tube is located between the inner and outer O-rings. A similar tube is also located outside of the outer O-ring. Monitor lines connected to these tubes provide indication of leakage if any occurs.

Prior to installation of the reactor internals, guide studs are assembled into the vessel flange. Dimensional relationships between the guide studs and the radial supports are such that when the lifting rig for the lower internals interfaces with the guide studs, the keys at the bottom of the lower internals are in position circumferentially to enter the reactor vessel radial supports.

Vessel Support

The reactor vessel supports are integral with the inlet and outlet nozzle low alloy forgings. They are a sliding support block type as defined in ASME Code Section III NF-3124. A total of eight integral supports are provided to support the reactor vessel. Each integral support can expand relatively freely in the radial direction but is restrained in the vessel tangential direction.

The reactor vessel integral supports are designed to withstand specified loading conditions and satisfy the requirements of ASME Code Section III NF.

Control Rod Drive Mechanisms

69 control rod drive mechanism nozzles are inserted through the penetration holes in the reactor vessel closure head and are welded by J-groove welds. The penetration nozzles welded to the closure head are Ni-Cr-Fe alloys and designed in accordance with ASME Section III NB.

In-core Instrumentation System

The instrumentation systems in the reactor are inserted though the in-core instrumentation system nozzles located on the closure head and welded by J-groove welds.

The 15 nozzles for the in-core instrumentation system that are welded to the closure head are Ni-Cr-Fe alloy, and are designed in accordance with ASME Section III NB.

Reactor Vessel Insulation

The reactor vessel insulation is of the reflective metal type, made mainly of stainless steel and designed for a 60-year life operating period. The insulation consists of prefabricated units which are designed to fit together during assembly and maintain insulation efficiency throughout temperature changes. Each unit is designed to allow drainage of moisture and prevent buildup of internal pressure from trapped gasses.

Insulation for the closure head top dome and flange is supported by steel frames not connected to any nozzle or piping. Insulation access panels and insulation surrounding the head penetrations are designed so that they may be removed easily for inservice inspection and maintenance operations.

Reactor Vessel Nozzles

The reactor vessel inlet, outlet and DVI nozzles are fabricated of low alloy steel forgings in accordance with ASME Code Section III and Section II SA-508 Grade 3 Class 1 material. The nozzles are designed in accordance with ASME Section III NB.

Piping connected to the reactor vessel nozzles has been designed so as not to exceed the allowable loads on any nozzle. Safe ends are welded to nozzles that connect to stainless steel piping.

Materials and Inspections

Subsection 5.3.1.1 defines the materials and specifications for the reactor vessel parts. Subsection 5.3.1.3 explains the examinations for the reactor vessel, including preservice inspections. Subsection 5.3.1.6 describes compliance with reactor vessel material surveillance program requirements.

Design Conditions

Cyclic loads are applied to the reactor vessel through normal power changes, reactor trips, and startup and shutdown operations. Appropriate design base cycles are selected for fatigue evaluation and provide a conservative design envelope for the design life.

Analyses are carried out to show that the design of the reactor vessel is within the fatigue and stress limits of ASME Code Section III. Design loadings and transients specified for the analyses are conservatively selected so that they are the severest set of conditions for the reactor vessel that can be expected during service.

5.3.3.2 Materials of Construction

The reactor vessel is fabricated with the materials described in Subsection 5.2.3. General material requirements and requirements for materials of the reactor vessel are specified in Subsection 5.2.3 and 5.3.1.1, respectively.

All pressure boundary materials for the reactor vessel are in accordance with applicable material requirements of ASME Code Section III and the applicable ASME Code Section II material specification. The materials also satisfy 10 CFR 50 Appendix G (Ref. 5.3-6), and for weld materials, applicable ASME Code Section IX requirements are also satisfied.

The main pressure boundary parts such as the reactor vessel closure head, upper and lower shells including flanges, transition ring, bottom head dome and major nozzles are low alloy steels conforming to ASME Code Section II SA-508 Grade 3 Class 1. Interior surfaces of the reactor vessel are clad with austenitic stainless steel.

The reactor vessel stud bolts are described in detail in Subsection 5.3.1.7.

Material selection is based on consideration of strength, fracture toughness, fabrication and compatibility in the PWR environmental condition, including compatibility with the reactor vessel material surveillance program as described in Subsection 5.3.1.6. Suitability of the material selection has been proven by successful long-term operating experience throughout the world.

5.3.3.3 Fabrication Methods

Details concerning fabrication methods for the reactor vessel are provided in Subsection 5.3.1.2.

The reactor vessel is a Class 1 vertical cylindrical pressure vessel fabricated by welding in accordance with ASME Code Section III requirements. Fabrication is based on the use of drawings, fabrication procedures, and examination procedures.

The reactor vessel shells are joined by circumferential welds. The length of the lower shell is made as long as possible in order to minimize the number of welds. Welding procedures applied for the welds of the reactor vessel pressure boundary are qualified in accordance with ASME Code Section III and Section IX requirements.

Welding processes such as GTAW, GMAW, SMAW, PAW, and SAW are used for the reactor vessel. Electroslag welding is applied only for cladding. For welding of low alloy steels, preheat temperatures satisfy ASME Code Section III Appendix D requirements, or are controlled in accordance with the applicable WPS. Post-weld heat treatment conditions for welds of low alloy steels are in accordance with ASME Code Section III NB-4620.

Other fabrication processes including cutting, drilling, bending and forming, are performed in accordance with the procedures and/or instructions prepared for the reactor vessel.

Previous reactors vessels have been fabricated by MHI with similar processes. These vessels have operated with excellent service history for many years.

5.3.3.4 Inspection Requirements

NDE performed on the reactor vessel are described in Subsection 5.3.1.3.

All pressure boundary forgings and stud bolts are ultrasonically examined, as well as surface examined by the magnetic particle or liquid penetrant method. Examinations are carried out in accordance with the requirements of ASME Code Section III.

Pressure boundary welds of the reactor vessel are examined in accordance with the methods prescribed and satisfy applicable acceptance requirements of ASME Code Section III.

ASME Code Section V (Ref. 5.3-21) requirements are applied for examinations as required by ASME Code Section III.

As additional NDE, pressure boundary ferritic full penetration welds are ultrasonically examined in accordance with, and using the acceptance standards of ASME Code Section XI. These examinations are carried out prior to final post-weld heat treatment and ensure that the welds will satisfy preservice and inservice inspections without the need for repairs.

5.3.3.5 Shipment and Installation

The reactor vessel is shipped horizontally with saddle-type shipping skids attached. All vessel openings are sealed to prevent moisture from entering, and desiccant is placed inside the reactor vessel to keep the inside dry. Desiccant is usually placed in a wire mesh basket attached to the cover of the vessel flange.

The reactor vessel closure head assembly is shipped with a shipping cover attached. The closure head also uses a saddle-type shipping skid. All closure head and shipping cover openings are sealed to prevent moisture from entering, and desiccant is placed inside the closure head. Desiccant is usually placed in a wire mesh basket attached to the shipping cover. Prior to shipment, the interior of the closure head assembly is normally purged with inert gas.

Cleanliness and protection against contamination for austenitic stainless steel parts of the reactor vessel are discussed in Subsection 5.2.3.4.

After arrival of the site and prior to installation, the reactor vessel and closure head assembly is examined for cleanliness and damage. During installation, reactor vessel integrity is maintained by different measures; for example, by applying access control to personnel entering the vessel, weather protection using temporary tents and periodic cleaning.

5.3.3.6 Operating Conditions

Plant operating procedures are prepared and implemented to control stresses within acceptable ranges defined by the P-T limits described in Subsection 5.3.2, and shown in Figures 5.3-2 and 5.3-3.

These limits satisfy 10 CFR 50 Appendix G (Ref. 5.3-6) requirements and operating within the limits ensures that the stresses of the reactor vessel parts during normal operation are maintained within the requirements to which the reactor vessel was designed for.

For emergency or faulted operating conditions where safety systems automatically actuate, the reactor vessel integrity is maintained by considering the severest design transients in the design of the vessel.

For the beltline region of the reactor vessel, the screening criteria in 10 CFR 50.61 (Ref. 5.3-3) are used to verify that the material properties will ensure reactor vessel integrity during PTS events, as discussed in Subsection 5.3.2.3.

Based on the above, it is concluded that the reactor vessel integrity will be maintained during the most severe postulated transients and PTS events.

5.3.3.7 Inservice Surveillance

Inservice Inspection

Inservice inspection of the reactor vessel is in accordance with the ASME Code Section XI requirements. Preservice inspections are also carried out prior to installation in accordance with applicable ASME Code Section III and Section XI requirements. Inservice inspection for the US-APWR is described in Subsection 5.2.4. A detailed list of inservice and preservice inspections for the reactor vessel is shown in Table 5.3-2 and Table 5.3-3. Actual inspections to be applied to a specific plant are provided by the COL applicant. Additional details are provided below.

Visual inspections of the closure head are carried out during each refueling outage. Selective inspections of the internal cladding, closure head nozzles and the gasket seating surface can be done with the use of optical devices. The top head dome area, including the peripheral head nozzles can be accessed through the integrated head package access ports. The bare top head dome and closure head nozzles beyond the peripheral nozzles can be accessed by removing the top head removable insulation panels. 360° visual inspections around each nozzle near the top head dome surface can also be achieved using remote, mobile inspection devices. The head insulation is offset from the top head surface by approximately 4 inches to allow access for these inspection devices.

The knuckle transition area of the closure head has relatively high operating stresses within the closure head and is accessible from the outer surface for visual inspection, surface NDE by liquid penetrant or magnetic particle methods, and ultrasonic examination.

The closure head stud bolts, nuts and washers can be inspected periodically using visual, magnetic particle and/or ultrasonic examinations. The stud bolts, nuts, and washers can be removed to dry storage areas during refueling for such inspections.

The upper shell cladding is accessible for inspection during refueling in certain areas above the inlet and outlet nozzles. If necessary, the lower core internals can be removed so that the entire vessel inner surfaces are accessible.

In addition, full-penetration welds in the following areas of the installed reactor vessel are also accessible for NDE:

- Closure head, from the inside clad and outside surfaces. A stand is provided on the operating deck for the closure head to be stored during refueling to facilitate inspections.
- Vessel shell, vessel nozzles, transition ring and bottom head, from the inside clad surface. Completely removable reactor internals facilitate such inspections. Storage space for the reactor internals is provided.
- Welds between the inlet/outlet nozzles and nozzle safe ends, from the inside clad and outside surfaces.
- Welds between the DVI nozzles and nozzle safe ends, from the outside surfaces.
- Field welds between the reactor vessel nozzle safe ends and the main coolant piping, from the outside surfaces. The insulation covering these welds is removable to provide access for the inspections.

Due to factors such as radiation levels and underwater accessibility, some regions of the reactor vessel, particularly those from the vessel inner clad surfaces, may be difficult to access for inservice inspections required by the ASME Code. Several design and manufacturing considerations are made to enhance the inservice inspection results for these regions.

- During manufacturing of the reactor vessel, ultrasonic examinations are performed on internally clad surfaces to an acceptance and repair standard which confirms the cladding bond is sufficient to permit ultrasonic examination of the base metal from the inside surface. These examinations are carried out in accordance with the procedures of ASME Code Section V.
- The inside surfaces of the reactor vessel shells are cylindrical surfaces free of obstructions that may interfere with the inspection equipment.
- The outer surface of weld joints and surfaces of deposited cladding on the welds are finished so that they will allow proper ultrasonic examinations.
- During fabrication, full penetration ferritic pressure boundary welds are ultrasonically examined in accordance with ASME Code Section XI requirements. These are in addition to the required ASME Code Section III examinations. The examinations are also carried out for the reactor coolant nozzle to safe end welds.

Material Surveillance Program

Changes in the fracture toughness properties of reactor vessel ferritic pressure boundary occur due to exposure of neutron irradiation. The material surveillance program monitors these changes for the beltline region materials.

Test specimens manufactured from extensions of the beltline material are exposed to the neutron irradiation inside the vessel. Material changes are verified by periodically withdrawing and carrying out impact tests. When necessary, operating procedures are modified based on these impact test results in order to ensure adequate margin against brittle fracture.

The material surveillance programs are in accordance with requirements of 10 CFR 50 Appendix H (Ref. 5.3-7), as well as applicable ASTM requirements. Details concerning the material surveillance program are summarized in Subsection 5.3.1.6.

5.3.3.8 Threaded Fasteners

The reactor vessel stud bolts satisfy ASME Code Section III and Regulatory Guide 1.65 (Ref. 5.3-14) requirements. Details concerning the reactor vessel stud bolts, including mechanical property requirements and examinations applied to ensure the integrity of the bolts are described in Subsections 5.3.1.7 and 3.13.

5.3.4 Combined License Information

COL 5.3(1) Pressure-Temperature Limit Curves

The COL applicant addresses the use of plant-specific reactor vessel P-T limit curves. Generic P-T limit curves for the US-APWR reactor vessel are shown in Figures 5.3-2 and 5.3-3, which are based on the conditions described in Subsection 5.3.2. However, for a specific US-APWR plant, these limit curves are plotted based on actual material composition requirements and the COL applicant addresses the use of these plant-specific curves.

COL 5.3(2) Reactor Vessel Material Surveillance Program

The COL applicant provides a reactor vessel material surveillance program based on information in Subsection 5.3.1.6.

COL 5.3(3) Surveillance Capsule Orientation and Lead Factors

The COL applicant addresses the orientation and resulting lead factors for the surveillance capsules of a particular US-APWR plant.

COL 5.3(4) Reactor Vessel Material Properties Verification

The COL applicant verifies the USE and RT_{NDT} at EOL, including a PTS evaluation based on actual material property requirements of the reactor vessel material and the projected neutron fluence for the design-life objective of 60 years.

COL 5.3(5) Preservice and Inservice Inspection

The COL applicant provides the information for preservice and inservice inspection described in Subsection 5.2.4.

5.3.5 References

5.3-1 Codes and standards, NRC Regulations Title 10, Code of Federal Regulations, 10 CFR 50.55a.

5.3-2 Acceptance criteria for fracture prevention measures for lightwater nuclear power reactors for normal operation, NRC Regulations Title 10, Code of Federal Regulations, 10 CFR 50.60.

5.3-3 Fracture toughness requirements for protection against pressurized thermal shock events, NRC Regulations Title 10, Code of Federal Regulations, 10 CFR 50.61.

5.3-4 General Design Criteria for Nuclear Power Plants, NRC Regulations Title 10, Code of Federal Regulations, 10 CFR 50 Appendix A.

5.3-5 Quality Assurance Criteria for Nuclear Power Plants and Fuel Reprocessing Plants, NRC Regulations Title 10, Code of Federal Regulations, 10 CFR 50 Appendix B.

5.3-6 Fracture Toughness Requirements, NRC Regulations Title 10, Code of Federal Regulations, 10 CFR 50 Appendix G.

5.3-7 Reactor Vessel Material Surveillance Program Requirements, NRC Regulations Title 10, Code of Federal Regulations, 10 CFR 50 Appendix H.

5.3-8 Control of Ferrite Content in Stainless Steel Weld Metal, Regulatory Guide 1.31, Rev.3, April 1978.

5.3-9 Control of Electroslag Weld Properties, Regulatory Guide 1.34, Rev.0, December 1972.

5.3-10 Quality Assurance Requirements for Cleaning of Fluid Systems and Associated Components of Water-Cooled Nuclear Power Plants, Regulatory Guide 1.37, Rev.1, March 2007.

5.3-11 Control of Stainless Steel Weld Cladding of Low-Alloy Steel Components, Regulatory Guide 1.43, Rev.0, May 1973.

5.3-12 Control of the Use of Sensitized Stainless Steel, Regulatory Guide 1.44, Rev.0, May 1973.

5.3-13 Control of Preheat Temperature for Welding of Low-Alloy Steel, Regulatory Guide 1.50, Rev.0, May 1973.

5.3-14 Materials and Inspections for Reactor Vessel Closure Studs, Regulatory Guide 1.65, Rev.0, October 1973.

5.3-15 Welder Qualification for Areas of Limited Accessibility, Regulatory Guide 1.71, Rev.1, March 2007.

5.3-16 Radiation Embrittlement of Reactor Vessel Materials, Regulatory Guide 1.99, Rev.2, May 1988.

5.3-17 Calculational and Dosimetry Methods for Determining Pressure Vessel Neutron Fluence, Regulatory Guide 1.190, Rev.0, March 2001.

5.3-18 U.S Nuclear Regulatory Commission, Standard Review Plan for the Safety Analysis Reports for Nuclear Power Plants, NUREG-0800, March 2007.

5.3-19 Materials, ASME Boiler and Pressure Vessel Code, Section II, American Society of Mechanical Engineers, 2001 Edition with 2003 Addenda.

5.3-20 Rules for Construction of Nuclear Power Plant Components, ASME Boiler and Pressure Vessel Code, Section III, American Society of Mechanical Engineers, 2001 Edition with 2003 Addenda.

5.3-21 Nondestructive Examination, ASME Boiler and Pressure Vessel Code, Section V, American Society of Mechanical Engineers, 2001 Edition with 2003 Addenda.

5.3-22 Welding and Blazing Qualifications, ASME Boiler and Pressure Vessel Code Section IX, American Society of Mechanical Engineers, Latest Edition and Addenda.

5.3-23 Rules for In-service Inspection of Nuclear Power Plant Components, ASME Boiler and Pressure Vessel Code Section XI, American Society of Mechanical Engineers, 2001 Edition with 2003 Addenda.

5.3-24 Standard Practice for Conducting Surveillance Tests for Light-Water Cooled Nuclear Power Reactor Vessels, ASTM E-185-82.

5.3-25 Standard Test Method for Linear-Elastic Plane-Strain Fracture Toughness K_{Ic} of Metallic Materials, ASTM E-399.

5.3-26 Standard Test Method for Measurement of Fracture Toughness, ASTM E-1820.

5.3-27 Timoshenko, S. P. and Goodier, J. N., Theory of Elasticity, Third Edition, McGraw-Hill Book Co., New York, 1970.

Table 5.3-1 Chemical Composition Requirements for Reactor Vessel Materials

Element	Beltline Region Forging (wt %)	Beltline Region As-Welded Weld Material (wt %)
Copper	0.05 max.	0.08 max.
Nickel	1.00 max.	0.95 max.
Phosphorus	0.005 max.	0.012 max.
Vanadium	0.05 max.	0.05 max.

Table 5.3-2 Inspection Plan for Reactor Vessel Materials

	Requirements[1]			
	Procurement	**Manufacturing**	**Preservice**	**Inservice**
Shell and Flange Forgings	MT UT	MT[2]	—	—
Closure Head Forgings	MT UT	MT[2]	VT[3]	VT[3]
Stud Bolts, Nuts and Washers	MT UT	MT[2]	UT[4] VT[4]	UT[4] VT[4]
Vessel Nozzle Forgings	MT UT	MT[2]	—	—
Closure Head Nozzles	PT UT	PT[2]	ECT[5]	—
Closure Head Vent Pipe	PT UT	PT[2]	ECT[5]	—
Ferritic Material Attachments	UT or MT	MT[2]	—	—
Stainless Steel and Ni-Cr-Fe Alloy Attachments	UT or PT	PT[2]	—	—

Notes:

1. UT – Ultrasonic Examination
   PT – Liquid Penetrant Examination
   MT – Magnetic Particle Examination
   VT – Visual Inspection
   ECT – Eddy-Current Inspection

2. Applicable for machined surfaces only.

3. Applicable for top dome portion only.

4. UT applicable for stud bolts, VT applicable for nuts and washers.

5. Applicable for inner surfaces of Alloy 690 materials only. Extent of inspection to be detailed in preservice/inservice inspection and testing program.

Table 5.3-3 Inspection Plan for Reactor Vessel Welds

	Requirements[1]		
	Manufacturing	**Preservice**	**Inservice**
Full penetration pressure boundary welds of ferritic forgings	RT UT MT	UT PT[2]	UT PT[2]
J-groove welds of head nozzles	PT[3]	ECT	ECT
J-groove welds of vent pipe	PT[4]	ECT	ECT
Full penetration dissimilar metal welds of head nozzles	RT PT	UT or PT	UT or PT
Vessel nozzle to safe end welds	RT UT PT	UT PT	UT PT
Attachment welds to pressure boundary	MT or PT[3]	—	—
Inner Cladding	UT PT	VT	VT

Notes:

1. RT – Radiographic Examination
   UT – Ultrasonic Examination
   PT – Liquid Penetrant Examination
   MT – Magnetic Particle Examination
   VT – Visual Inspection
   ECT – Eddy-Current Inspection

2. Additional for closure head to flange welds only.

3. Every 1/2” thickness of weld and final surface.

4. At 1/2 thickness of weld and final surface.

Table 5.3-4 End-of Life RT_{NDT} and USE for Beltline Materials

Location	RT_{NDT}/RT_{PTS}				USE	
	Initial	EOL (60EFPY)[*1]			Initial	EOL[*1] (60EFPY, 1/4-T)
		ID	1/4-T	3/4-T		
Beltline Region Forgings	< 0°F	76.7°F	67.8°F	53.0°F	> 75 ft-lb	Min. 63 ft-lb
Beltline Region Weld	< -20°F	148.6°F	129.8°F	92.1°F	> 75 ft-lb	Min. 61 ft-lb

Notes:

1. Representative EOL values based on the initial values shown in the table. Plant-specific values to be determined based on actual material property requirements.

Table 5.3-5 Reactor Vessel Design Data

Parameter	Value
Design pressure [psig]	2,485
Design temperature [°F]	650
T_{hot} [°F]	617.0
T_{cold} [°F]	550.6
Overall height from top of closure head to bottom of bottom head dome [inch]	532.9 (1)
Height from top of vessel flange mating surface to bottom of hemispherical bottom head dome [inch]	435.1 (1)
Outside diameter of closure head and vessel flange [inch]	241.3
Inlet nozzle inner diameter [inch]	31.0
Outlet nozzle inner diameter [inch]	31.0
DVI nozzle inner diameter [inch]	3.44
Inside shell diameter of beltline region [inch]	202.8
Shell thickness at beltline region [inch]	10.4 (2)
Clad thickness [inch]	0.2 (2)
Fluence at ID of beltline region for base material [n/cm^2]	9.8×10^{18}
Fluence at ID of beltline region for weld [n/cm^2]	8.5×10^{18}

Notes:

1. Approximate value.
2. Nominal dimension.

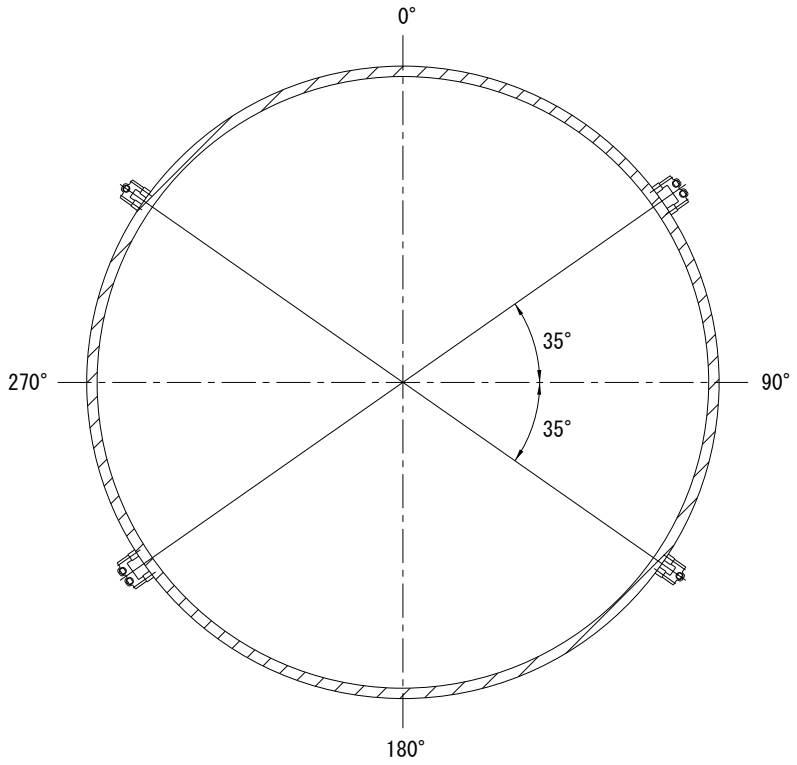

Figure 5.3-1 Orientation of Surveillance Capsules

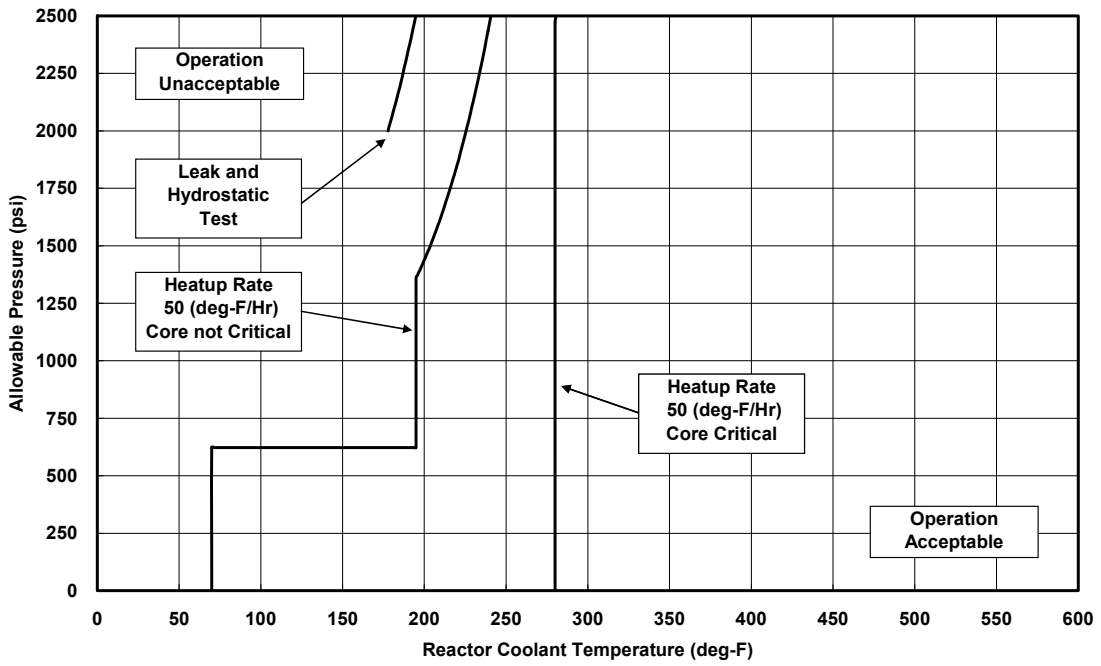

Figure 5.3-2 Representative P-T Limit Curve for Heatup up to 60EFPY

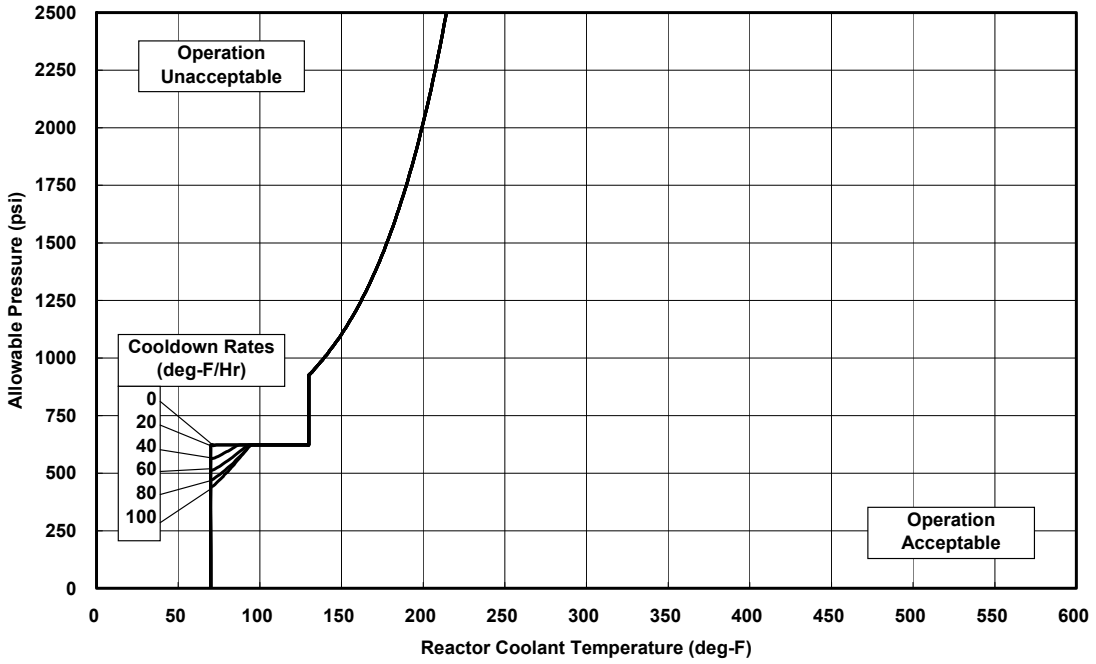

Figure 5.3-3 Representative P-T Limit Curve for Cooldown up to 60EFPY

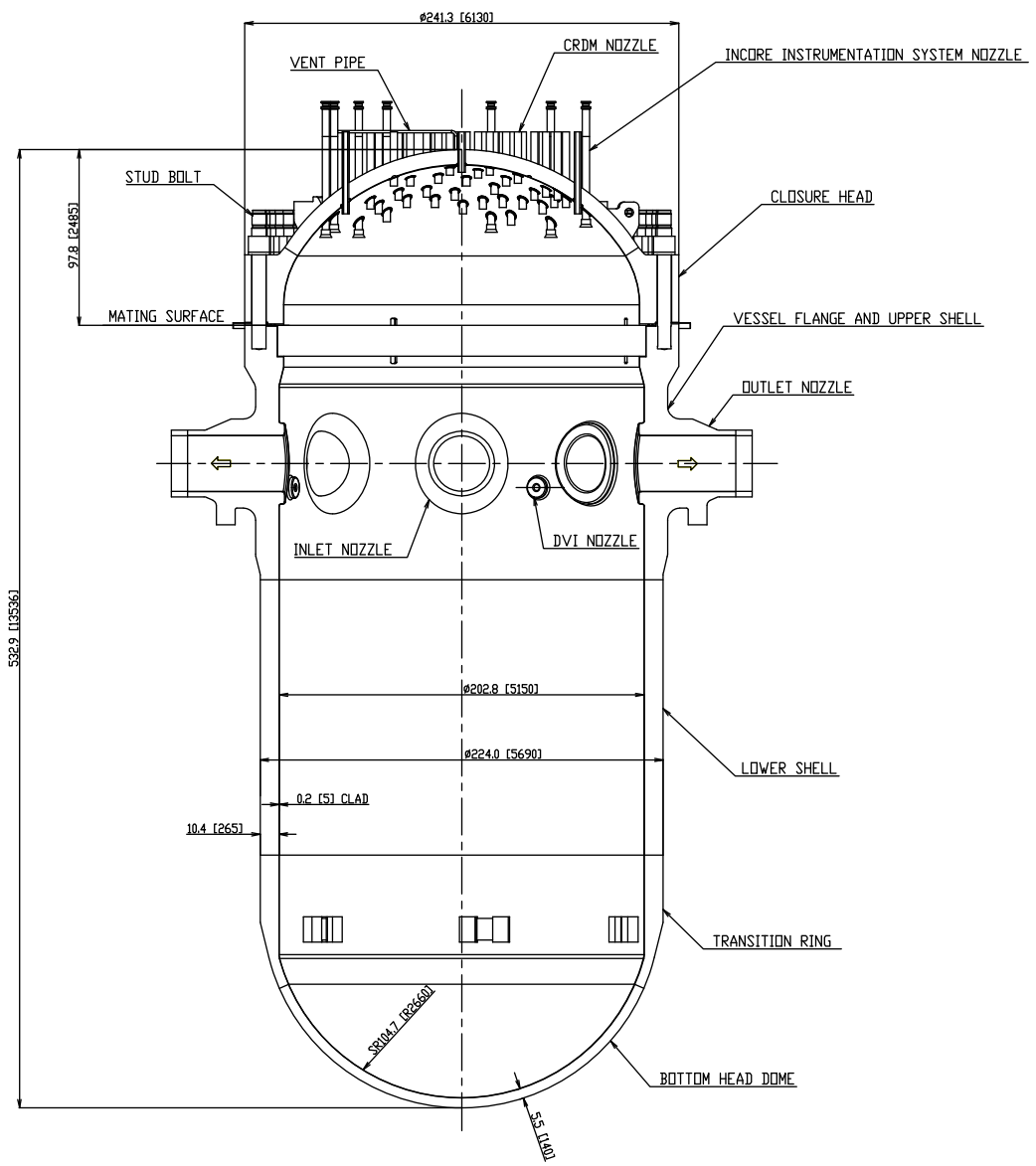

Units: inch

Figure 5.3-4 Reactor Vessel Side View

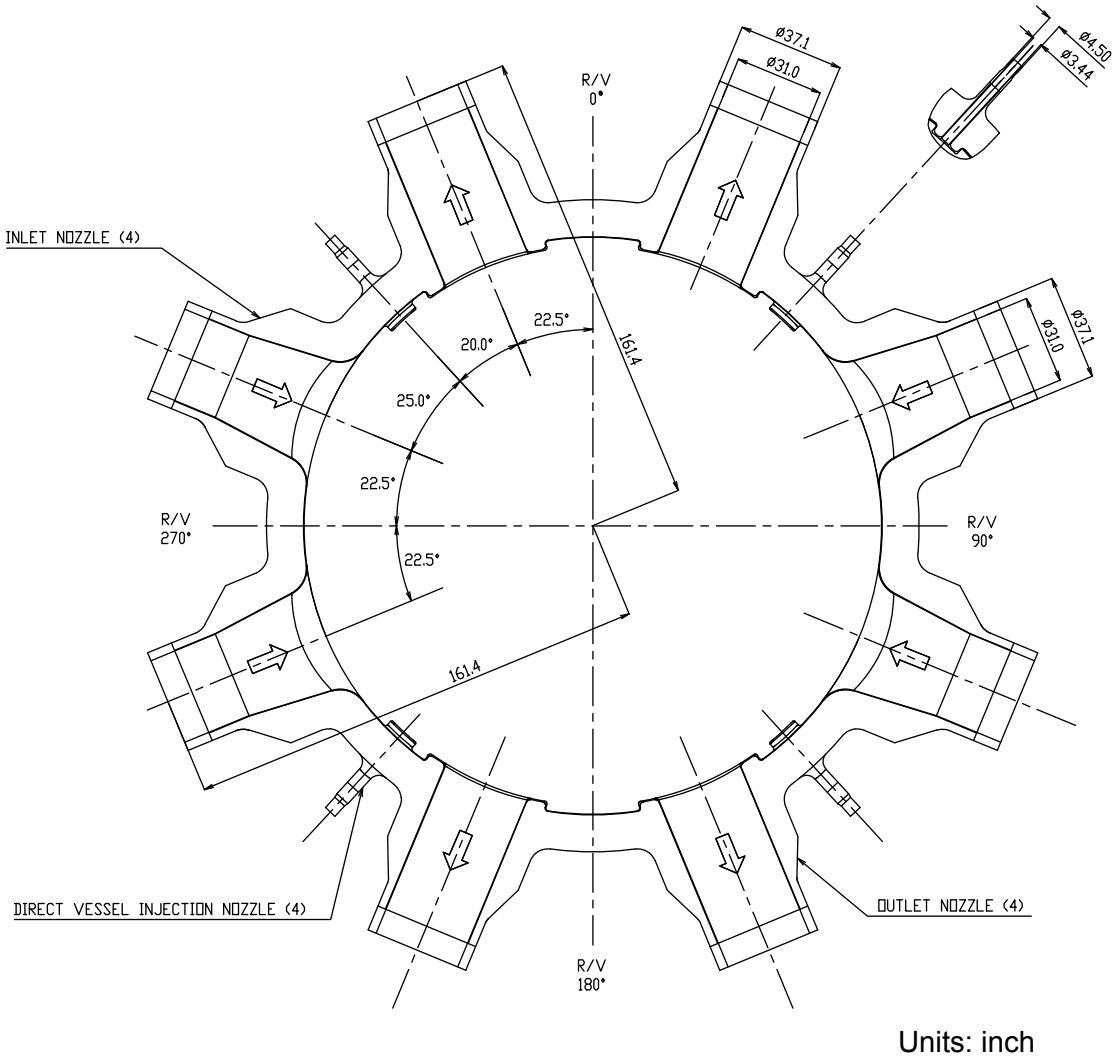

Figure 5.3-5 Reactor Vessel Cross-Sectional View at Inlet and Outlet Nozzle Center

5.4 Reactor Coolant System Component and Subsystem Design

This section provides information regarding the performance requirements and design features of the reactor coolant pump, steam generator, reactor coolant piping, main steam flow restrictor, residual heat removal system, pressurizer and discharge system, pressurizer relief tank, and RCS high point vent system.

Information about the reactor coolant system support is described in Subsection 3.8.3.1. Information about the pressurizer safety valve is described in Subsection 5.2.2, and information about the safety depressurization valve (SDV) and depressurization valve (DV) is described in Subsection 5.4.12.

5.4.1 Reactor Coolant Pumps

5.4.1.1 Pump Flywheel Integrity

Integrity of the reactor coolant pump (RCP) flywheel is ensured on the basis of the following design and quality assurance procedures.

5.4.1.1.1 Design Basis

The RCP flywheel is designed, manufactured, and inspected to minimize the possibility of generating high-energy fragments (missiles) under any anticipated operating or accident condition consistent with the intent of the guidelines set forth in Standard Review Plan (SRP) 5.4.1.1 and Regulatory Guide (RG) 1.14 (Ref. 5.4-9).

Calculated stress at operating speed is based on stress due to centrifugal force. Conservatively, 125% of operating speed is selected as the design speed for the RCPs. Flywheels are tested at 125% of the maximum synchronous speed of the motor.

An analysis is performed to predict the critical speed, which is determined the flywheel failure mode of ductile failure, nonductile failure, and excessive deformation of the flywheel. The flywheel is designed that the normal speed is less than the one-half of the lowest of the critical speeds. And it is confirmed that the lowest critical speed is greater than the predicted loss-of-coolant accident (LOCA) overspeed (Ref. 5.4-18).

5.4.1.1.2 Fabrication and Inspection

The flywheel consists of two thick plates bolted together. The flywheel material is produced by a process that minimizes flaws in the material and improves its fracture toughness properties, i.e., an electric furnace with vacuum degassing. Each plate is fabricated from SA-533, Grade B, Class 1 steel. Flywheel blanks are cut from SA-533, Grade B, Class I plates with at least I/2 in. of stock remaining on the outer surface and bore surface for machining to final dimensions.

Finished machined bore, keyways, and drilled holes are subjected to magnetic particle or liquid penetrant examination in order to meet the requirements of Section III of the ASME Code. Finished flywheels, as well as the flywheel material, are subjected to 100% volumetric ultrasonic inspection procedures and acceptance standards specified in Section III of the ASME Code (Ref. 5.4-14).

Flywheels are inspected by a program based on the recommendations of RG 1.14, which references Section XI of the ASME Code (Ref. 5.4-9, 15).

The inspection program is discussed in Technical Specification 5.5.7, Reactor Coolant Pump Flywheel Inspection Program.

5.4.1.1.3 Material Acceptance Criteria

RCP motor flywheels conform to the following material acceptance criteria:

- Nil ductility transition temperature (NDTT) of the flywheel material is obtained by two drop weight tests which exhibit no-break performance at 20°F in accordance with ASTM E-208. The tests prove that the NDTT of the flywheel material does not exceed 10°F.

- A minimum of three charpy v-notch (CVN) impact specimens from each plate are tested at ambient (70°F) temperature in accordance with ASME SA-370 specifications. The CVN energy in both the parallel and normal orientation with respect to the final rolling direction of the flywheel plate material is at least 50 ft-lb and 35-mil lateral expansion at 70°F, and therefore, the flywheel material has a reference nil ductility temperature (RT_{NDT}) of 10°F. An evaluation of the flywheel overspeed proves that integrity of the flywheel is maintained.

5.4.1.2 Reactor Coolant Pump Design Bases

The RCP is in the reactor containment and ensures adequate reactor cooling flow rate to maintain a departure from nucleate boiling ratio (DNBR) greater than the limit that is evaluated in the safety analysis.

The RCP is designed, fabricated, and tested according to the requirements of 10CFR50, 50.55a, GDC 1 and ASME code, Section III (Ref. 5.4-7, 14). The pump is designed with the margin in integrity and exhibits safe operation under all postulated events.

In the event of loss of offsite power (LOOP), the pump is able to provide adequate flow rate during coastdown conditions because of the pump assembly rotational inertia which is provided by the flywheel (top of the motor), the motor rotor, and other rotating parts. This forced flow and the subsequent natural circulation effect in the reactor coolant system (RCS) adequately cools the core.

Figure 5.4.1-1 shows the RCP and Table 5.4.1-1 provides the design parameters of the RCP.

5.4.1.3 Pump Assembly Description

5.4.1.3.1 Design Description

The RCP is a vertical shaft, single-stage, mixed flow pump with diffuser. The pump assembly is primarily composed of five sections, i.e., the hydraulics, thermal shield, rotating parts and bearing, the seals, and the motor sections. The pump and the motor are joined by rigid coupling.

The hydraulic section contains the casing, impeller, diffuser and suction adaptor. The casing has a suction nozzle at the bottom and a discharge nozzle on the side. The thermal shield section consists of a thermal barrier and heat exchanger. The rotating parts consist of a shaft, coupling, impeller, and spool piece.

The seal section consists of three seals. The first is the hydrostatic seal; the second and third are mechanical seals. The No. 2 and No. 3 seals are assembled in a cartridge. These three seals prevent release of reactor coolant to the atmosphere.

The motor section consists of a total enclosed squirrel cage induction motor with a vertical solid shaft, an oil-lubricated, double-acting Kingsbury type thrust bearing, upper and lower oil-lubricated radial guide bearings, and flywheel.

All parts of the pump in contact with the reactor coolant are austenitic stainless steel except for seals, bearings, and special parts. The reactor coolant pressure boundary (RCPB) materials of the RCP are given in Subsection 5.2.3.

5.4.1.3.2 Description of Operation

The impeller delivers the reactor coolant from the suction nozzle to the discharge nozzle and through the diffuser. A suction adapter is provided at the bottom of pump internal to limit leakage of reactor coolant between impeller and casing.

Injection water is supplied to the RCP through a connection on the main flange to help maintain proper operating temperatures. The injection water enters a plenum in the thermal barrier, and then flows in two directions. Downward flow goes to the thermal barrier/heat exchanger and into the RCS. The upward flow goes through the seal and is then bled-off and returned to the chemical and volume control system (CVCS).
The thermal barrier heat exchanger cools the reactor coolant that enters the RCP plenum in the event of loss of injection.

The RCP motor oil-lubricated bearings are of conventional design. The radial bearings are the segmented pad type, and the thrust bearing is a double-acting Kingsbury type.

Component cooling water (CCW) is supplied to the external upper bearing oil cooler and to the integral lower bearing oil cooler. The oil spillage protection system is attached to the RCP motor and is provided to contain and channel lubricating oil to a common collection point.

The motor is a totally enclosed squirrel cage induction motor with class F thermoplastic epoxy insulation, and fitted with external water/air coolers. The rotor and stator are of standard construction. Six resistance temperature detectors are embedded in the stator windings to sense stator temperature. A flywheel and anti-reverse rotation device are located at the top of the motor.

The internal parts of the motor are cooled by internal air. The fans on each end of the rotor draw air in through cooling slots in the motor frame. This air passes through the motor with particular emphasis on the stator end turns. It is then routed to the external water/air coolers that are supplied with CCW. Each motor has two such coolers, mounted

diametrically opposed to each other. Coolers are sized to maintain optimum motor-operating temperature.

RCP shaft and frame vibration levels are continuously monitored. Two probes mounted on top of the seal housing to measure shaft displacement. One is installed parallel to the pump discharge. The probes are located 90° apart. The frame vibration monitoring system consists of two velocity seismoprobes. The seismoprobes are placed on the motor flange 90° apart. The measured signals of shaft vibration and frame vibration are transmitted and recorded in the main control room (MCR). If these vibrations exceed their set point, alarms are generated to inform plant operators of the abnormal conditions.

A spool piece is mounted between the motor coupling and the pump coupling. The spool piece can be removed easily to disassemble the seal system without replacing the motor. After the motor and the motor stand are removed, the pump internals can be dismantled from the pump casing.

5.4.1.3.3 Loss of Seal Injection

Loss of injection water flow may be detected with a flow meter at the seal injection line. This condition will normally lead to an increase in seal and bearing inlet temperature and an increase in the No. 1 seal leak rate because reactor coolant flow into the RCP seals. Under these conditions, however, the CCW continues to provide flow to the thermal barrier heat exchanger; which cools the reactor coolant. The pump is therefore able to maintain safe operating temperatures and operate safely long enough for safe shutdown of the pump.

5.4.1.3.4 Loss of Component Cooling Water

If loss of CCW should occur, seal injection flow continues to be provided to the RCP. The pump is designed so that the seal injection flow is sufficient to prevent damage to the seals with a loss of thermal barrier cooling.

The loss of CCW to the motor bearing oil coolers will result in an increase in oil temperature and a corresponding rise in motor bearing metal temperature. The motor is however designed to withstand a loss of CCW up to 10 minutes.

Several transmitters are provided to monitor CCW flow in RCP motors and RCP thermal barriers. These transmitters provide flow indication and actuate low-flow alarms in the control room. Instructions are prepared for a loss of CCW and seal injection to the RCPs and/or motors. If CCW flow is lost and cannot be restored within the previously mentioned 10 minutes, the RCPs will be tripped following the reactor trip.

5.4.1.4 Design Evaluation

5.4.1.4.1 Pump Performance

The RCP is designed to maintain the required flow rate. The RCP is tested and hydraulic performance is checked. Initial plant testing confirms total delivery capability.

The RCP motor is tested, without mechanical damage, at over-speeds up to and including 125% of normal speed.

Controlled leakage shaft seals employ a well-established seal system that has been used in many operating plants. The primary components of No. 1 seal include the following: a runner, which rotates with the shaft and a non-rotating seal ring attached to the seal housing, and a seal ring and the seal runner, each of which is equipped with a silicone nitride faceplate clamped holder. The flow path is formed between the interface of the seal ring and seal runner. The seal insert mounted at the seal housing supports the seal ring. The seal ring can move axially on the seal insert to follow the seal runner. The controlled gap is thin and has a high spring ratio. The gap is constantly maintained.

No.2 seal is designed and tested to maintain full system pressure for enough time to secure the pump. In the case of No. 1 seal failure, the No. 1 seal leak-off line is automatically closed. If the No. 1 seal fails during normal operation, the No. 2 seal minimizes leakage rates. No. 2 seal is able to withstand full system pressure and the No. 3 seal ensures the backup function. This ensures that leakage into atmosphere would not be excessive.

If LOOP occurs, injection flow to the pump seals and CCW to thermal barrier and motor stops. Standby power sources are automatically triggered by LOOP so that CCW flow and seal injection flow are automatically restored. The RCP seal integrity during station blackout (SBO) is discussed in Section 8.4.

5.4.1.4.2 Coastdown Capability

Should LOOP occur, the RCP is necessary to provide adequate flow to protect the reactor. The RCP has high rotation inertia due to the flywheel and rotating parts; and it continues to provide reactor coolant during coastdown period. Coastdown capability is maintained during in the worst case scenario, which is when safe shutdown due to earthquake and loss of offsite electrical power occur simultaneously. Coastdown flow and core flow transients are provided in Section 15.3.

The reactor trip system ensures that pump operation does not exceed assumptions used for analyzing loss of coolant flow and also ensures that adequate core cooling is provided to permit an orderly reduction in power if flow from a RCP is lost during operation.

5.4.1.4.3 Bearing Integrity

The RCP bearings are self-aligning, hydrodynamic journal bearings that offer long life with negligible wear. The bearings are designed to keep bearing load within the limit established by analysis under severe conditions experienced during seismic events.

The bearings are furthermore designed to avoid excessive wear between rotating parts and stationary parts and therefore offer sufficient stiffness to limit shaft motion.

Low oil level in the motor lube oil sumps triggers an alarm in the control room. Each motor bearing contains built-in temperature detectors that indicate the beginning of failure due to high bearing temperature and that trigger an alarm in the control room. This requires pump shutdown. If the indications are ignored and the bearing proceeds to failure, the low

melting point of Babbitt metal on the pad surfaces ensures that sudden seizure of the shaft will not occur. In this event, the motor continues to operate, since it has sufficient reserve capacity to drive the pump under such conditions. The high torque required to drive the pump will, however, also require high current, which leads to the motor being shutdown by the electrical protection systems.

5.4.1.4.4 Locked Rotor

If the pump impeller were to rub a stationary part, it is assumed that instantaneous seizure of the impeller would occur. In this postulated case, the pump shaft just below the coupling to the motor would fail in torsion and loss of reactor coolant flow would occur. In this case, the motor would continue to run without overspeed and the flywheel would maintain its integrity because it is supported on the shaft by two bearings. The RCP is designed to endure the piping load due to the locked rotor. Theoretical flow transients in the case of a locked rotor event are provided in Section 15.3.

Shaft seizure can only be caused by impeller rubbing. Seizure of the shaft would not occur due to excessive rubbing on other locations. Excessive rubbing at the bearing would result in breakaway of the graphite in the bearing. Any seizure at the seal would result in breakage of the antirotating pin of the seal ring. The motor has enough power to rotate the motor and pump shaft in both these cases. Also, in these cases, signs of excessive rubbing would be detected in vibration and temperature. Increased vibration and high No. 1 seal inlet temperature and high No. 1 seal leak off temperature would be observed. High vibration level indicates mechanical trouble. In this case, the pump is stopped and disassembled for inspection.

5.4.1.4.5 Critical Speed

The RCP is designed to adequately separate between operation speed and critical speed. The critical speed is analyzed under severe conditions.

5.4.1.4.6 Missile Generation

Analysis is performed of the RCP design to avoid missile generation by the RCP. This analysis is conducted under all anticipated accident conditions, and ensures that the pump will not produce missiles.

5.4.1.4.7 Pump Overspeed Considerations

If a turbine trips for any reason, the generator and the RCP remain connected to the external network for 15 seconds to prevent a pump overspeed condition.

An overspeed condition could occur due to an electrical fault requiring immediate trip of the generator. The turbine control system and the turbine intercept valves, however, limit the overspeed to less than 120%. As additional backup, the turbine protection system has a mechanical overspeed protection trip, usually set at about 110% of rotating speed. In case a generator trip de-energizes the pump buses, the RCP motors are supplied from offsite power.

In the case of LOCA, leak before break (LBB) is applied for reactor coolant loop (RCL) piping and RCL branch piping with nominal diameter 6 inches or larger. Thus, the pump overspeed associated with the postulated pipe rupture accident need not be considered when LBB is demonstrated. The LBB is discussed in Subsection 3.6.3.

5.4.1.4.8 Antireverse Rotation Device

The motor of the RCP is equipped with an anti-reverse rotation device. The antireverse mechanism consists of pawls mounted on the outside diameter of the flywheel, a serrated ratchet plate mounted on the motor frame, a spring return for the ratchet plate, and three shock absorbers.

At a lower forward speed, the pawls drop and bounce across the ratchet plate; as the motor continues to slow, the pawls drag across the ratchet plate. After the motor has slowed and comes to a stop, the dropped pawls engage the ratchet plate, and as the motor tries to rotate in the opposite direction, the ratchet plate also rotates until it is stopped by the shock absorbers. The rotor remains in this position until the motor is energized again. When the motor is started, the ratchet plate is returned to its original position by the spring return.

As the motor begins to rotate, the pawls drag over the ratchet plate. When the motor reaches sufficient speed, the pawls bounce into an elevated position and are held in that position by friction resulting from centrifugal forces acting upon the pawls. While the motor is running at full speed, there is no contact between the pawls and ratchet plate.

Considerable plant experience with the design of the antireverse rotation device has shown high reliability of operation

5.4.1.4.9 Shaft Seal Leakage

Leakage from the RCP is controlled by three shaft seals arranged in series, such that reactor coolant leakage to the containment is essentially zero. The No. 1 seal reduces the leak-off pressure to that of the volume control tank. The No. 2 and 3 leak-off lines route each seal leakage to the containment vessel reactor coolant drain tank (CVDT). Each pump has a connection on the main flange for injection water and seal injection flow is supplied to each RCP. Seal injection inside the pump is separated into two directions. One injection flows down to cool the bearing and enters the RCS, while the other injection flows up the shaft through the seals. After passing through the No. 1 seal, most of the flow leaves the pump via the No. 1 seal leak-off line. Minimal flow passes through the No. 2 seal to its leak-off line. Purge water from a purge water head tank is supplied between the No. 2 and the No. 3 seal to cool them. After cooling the No. 2 and the No. 3 seal, the water enters the CVDT with No. 2 seal leak-off via the standpipe.

5.4.1.5 Tests and Inspections

The design and construction of the RCP is made to comply with the ASME Code, Section III (Ref. 5.4-14). The RCP is designed to allow inspections as stipulated by ASME Code, Section XI (Ref. 5.4-15). Tests and inspections of the RCP are given in Table 5.4.1-2.

The pump casing with support feet is cast in one piece. Internal parts can be removed from the casing for visual access to the pump casing.

Table 5.4.1-1 Reactor Coolant Pump Design Data

Unit design pressure (psig)	2,485
Unit design temperature (°F)	650[(a)]
Unit overall height (ft)	28
Total weight, dry (lb)	248,000
Pump moment of inertia (lb-ft^2)	115,330
Pump	
Design flow (gpm)	112,000
Developed head (ft)	306.9
Pump discharge nozzle, inside diameter (in.)	31
Pump suction nozzle, inside diameter (in.)	31
Rotating speed, synchronous (rpm)	1,200
Seal water injection (gpm)	8
Seal water return (gpm)	3
Purge water (gpm)	0.13
Component cooling water flow (gpm)	40
Motor	
Type	Total enclosed squirrel cage induction, with water/air coolers
Power (hp)	8,200
Voltage (V)	6,600
Phase (-)	3
Frequency (Hz)	60
Insulation class (-)	Class F

(a) Design temperature of pressure-retaining parts of the pump assembly exposed to reactor coolant and injection water on the high pressure side of No. 1 seal

Table 5.4.1-2 Tests and Inspections of the Reactor Coolant Pump Materials

Parts	RT[a]	UT[a]	PT[a]	MT[a]
Casing	Yes	-	Yes	-
Forgings				
Main flange	-	Yes	Yes	-
Diffuser flange	-	Yes	Yes	-
Main shaft	-	Yes	Yes	-
Stud bolts / Nuts	-	Yes	-	Yes
Seal housing	-	Yes	Yes	-
Pipe and Tubing	-	Yes	-	-
Plate				
Flywheel	-	Yes	Yes[b]	Yes[b]
Weldments				
Butt weld (Circumferential)	Yes	-	Yes	-
Fillet weld	-	-	Yes	-
Instrument connections	-	-	Yes	-

(a) RT – radiographic examination method
UT – ultrasonic examination method
PT – liquid penetrant examination method
MT – magnetic particle examination method

(b) Of machined bores key ways and drilled holes (either PT or MT)

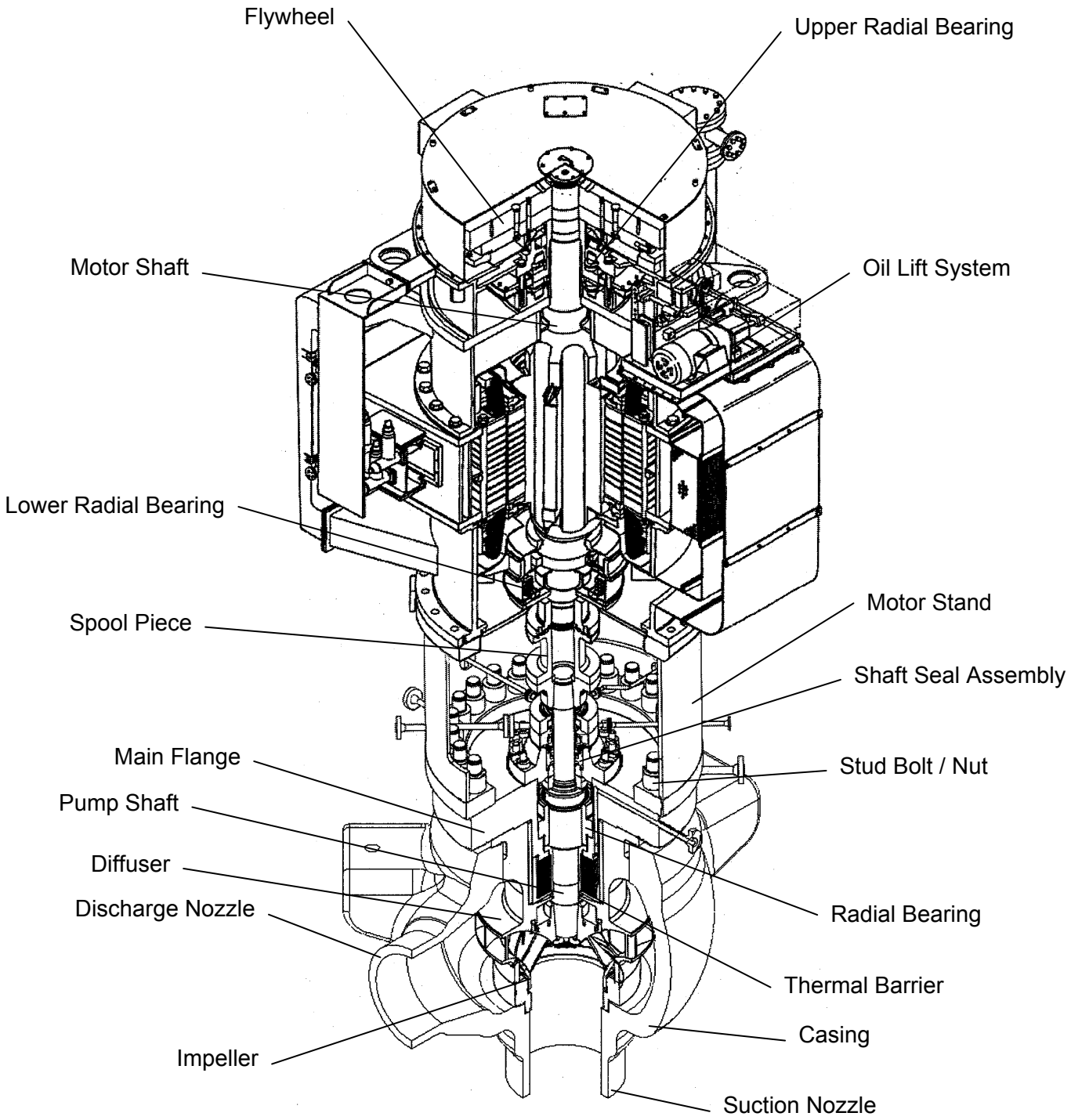

Figure 5.4.1-1 Reactor Coolant Pump

5.4.2 Steam Generators

5.4.2.1 Steam Generator Materials

5.4.2.1.1 Selection, Processing, Testing and Inspection of Materials

All pressure boundary materials used in the steam generator (SG) are selected and fabricated in accordance with the requirements of ASME Code Section III (Ref. 5.4-14) and ASME Code Section II (Ref. 5.4-13). A general discussion of the SG pressure boundary materials is given in Subsection 5.2.3 with types of materials listed in Table 5.2.3-1.

The SG tube material is alloy TT690 (ASME SB-163). The channel head divider plate is alloy TT690 (ASME SB-168). The channel head inner surfaces are clad with austenitic stainless steel. The primary nozzle safe ends are stainless steel type 316LN or 316 forgings (ASME SA-182) and are welded to the edge of coolant nozzles. The primary man-way covers are low alloy steel plate with stainless steel inserts attached to the surface in contact with the reactor coolant. The tubesheet is low alloy steel forging with Alloy 690 (ASME SFA-5.14) cladding on the primary side. The tubes are welded to the tubesheet cladding.

The secondary side pressure parts such as upper head, secondary shell barrels, nozzles, secondary man-ways, and hand-holes are low alloy steel. The feedwater ring material is low alloy steel pipe. Stainless steel type 405 is the tube support plate and the U-bend anti-vibration bar material. The materials of other secondary side internals are mainly carbon steel. Portions of the primary separators are constructed from low alloy steel to provide resistance to flow accelerated corrosion. The flow restrictor material within the steam nozzle is alloy TT690.

Fabrication and processing of ferritic materials and stainless steels are generally described in Subsections 5.2.3.3 and 5.2.3.4.

The tests and inspections of the SG materials listed in Table 5.4.2-2 are in accordance with the requirements of ASME Code Section III. Hydrostatic tests are performed in accordance with ASME Code Section III.

During manufacturing, cleaning and protection against contamination are performed on the primary and secondary sides for the SG in accordance with MHI procedures described in Subsection 5.2.3.4. Onsite cleaning and cleanness control are also performed in accordance with the MHI procedures.

5.4.2.1.2 Steam Generator Design

The MHI model 91TT-1 SG incorporates the following design features to achieve reliability and structural integrity.

5.4.2.1.2.1 Design Bases

Design bases of the SG are as follows.

The SG is designed, fabricated, inspected, and tested in accordance with the ASME Code. Both the primary and secondary side pressure boundaries meet the requirements for ASME Class 1 components, although the Code only requires that the SG secondary side pressure boundary be classified as Class 2. The stress limits, transient conditions, and load combinations for the SG are shown in Subsection 3.9.3.1. SG design data is listed in Table 5.4.2-1.

The SG is designed to deliver dry steam with moisture content no greater than 0.10% by weight at full power operating conditions. The primary and secondary water chemistry is controlled in accordance with industry guidelines. The tube bundle and all its features are designed to minimize tube corrosion, to minimize tube vibration and wear, and to enhance overall reliability. The design has provisions for limiting the introduction of foreign objects and to reduce the potential for tube damage due to loose parts wear.

Radioactivity design limits for the secondary side of the SGs during normal operation are evaluated and shown in Chapter 11. This limit is based on the operational leakage performance criterion of NEI 97-06 “Steam Generator Program Guidelines” (Ref. 5.4-17) that the RCS operational primary-to-secondary leakage through any one SG shall be limited to 150 gallons per day. This criterion provides defense-in-depth margin against tube rupture under accident conditions with resulting larger margins against rupture under normal operating conditions.

5.4.2.1.2.2 Design Description

The SG model number is 91TT-1. It is a vertical inverted U-tube recirculation type heat exchanger (Refer to general assembly Figure 5.4.2-1). The tubes are arranged in a triangular pitch, and are hydraulically expanded for the full depth of the tubesheet at each end and supported by eight broached tube support plates. In the U-bend region, tubes are supported by anti-vibration bars.

On the primary side, the reactor coolant enters through the inlet nozzle and leaves through the outlet nozzle of the channel head. The channel head is divided into hot leg side and cold leg side by a divider plate that is welded to the channel head and tube sheet. The reactor coolant flows inside of the U-tubes to transfer the heat and to produce steam.

Feedwater enters through the feedwater nozzle at an elevation above the tube bundle and mixes with the recirculating water. Stratification and striping in the feedwater nozzle are minimized by utilization of a welded thermal sleeve and an elevated feedwater ring. The feedwater is distributed circumferentially around the SG through many perforated nozzles. The feedwater ring is designed to prevent bubble collapse water hammer. The feedwater and recirculating water mixture flows down the annulus between the wrapper and lower shell and then enters the tube bundle region.

Steam is produced on the outer surface of the U-tubes and the steam-water mixture from the tube bundle flows into 22 centrifugal moisture separators where most of the entrained water is separated from the mixture and returned to the recirculating water. The steam flows into the secondary moisture separators for further moisture removal, increasing its quality to a targeted minimum of 99.9%. The dry steam exits from the SG through the steam outlet nozzle. This nozzle is equipped with a flow restrictor that controls the rate of

energy release to the containment during a postulated main steam line break event (Refer to Subsection 5.4.4.).

5.4.2.1.2.3 Tube Material

Alloy TT690 is selected as the tube material, because it has superior corrosion resistance compared to alloy MA600 or alloy TT600 that have been used in previous SG models. A special thermal treatment (TT) is applied after full solution mill annealing of the tubes in the straight condition (Ref. 5.4-19). After bending a stress relief thermal treatment is applied to the smaller radius U-bends to reduce the residual stresses produced during bending. Alloy TT690 tube material offers excellent resistance to corrosion mechanisms common to the SG operating environment including outside diameter stress corrosion cracking (ODSCC)/intergranular attack (IGA), and prevention of primary water stress corrosion cracking (PWSCC).

5.4.2.1.2.4 Tube to Tube Sheet Joint

Both ends of each U-tube are inserted into tube holes of the tubesheet, and welded to the primary side cladding. The portion of the tube located within the tubesheet thickness is hydraulically expanded to close the gap between the outer diameter of the tube and the inner diameter of the tube hole. Tube residual stress at the expansion transition area produced by hydraulic expansion is reduced compared to those produced by other tube expansion processes.

There is no deep crevice on the secondary side of the tubesheet and the bulk water flushes the top of the tubesheet region, thus minimizing the concentration of impurities and diluting the local environment.

The tube, the tube-to-tubesheet weld, and the tubesheet form the RCPB. The tube-to-tubesheet weld is designed to satisfy the stress requirements described in NB-3200 and Appendix F of ASME Code Section III. The welding procedure qualification and the welding operators performance qualification satisfy the requirements of NB-4350 of ASME Code Section III and the requirements of ASME Code Section XI (Ref 5.4-15) referred from NB-4350 of ASME Code Section III.

5.4.2.1.2.5 Tube Support Plate

The SG tube bundle is supported against lateral movement by eight tube support plates. These plates are located so as to minimize flow induced tube vibration and to keep tube stresses low during seismic and other events that produce lateral loading of the tubes.

The tubes pass through broached holes in each tube support plate. The broached hole configuration is shown in Figure 5.4.2-2. Each tube hole has three flat contact points separated by three flow openings. The contact surfaces (called lands) are flat to inhibit concentration of impurities at the point of contact with the tube, thus reducing the potential for local tube corrosion. The three flow openings allow the steam-water mixture to flow through the support plates with minimal flow resistance.

The tube support plate material is corrosion resistant type 405 stainless steel. The oxide volume growth behavior of this material inhibits the tube denting mechanism common to drilled carbon steel support plates of earlier SG models.

5.4.2.1.2.6 Flow Induced Vibration of Tube Bundle

The following potential secondary side flow induced tube vibration mechanisms are evaluated for the SG tube bundle during normal operation and the adequacy of the tube support spans is confirmed.

1. Vortex shedding: It is generally accepted that vortex shedding does not occur in two-phase flow and is only a concern in single-phase (all water) regions. In the SG tube bundle there are two regions where flow crosses the tubes. One is in the U-bend and the other is at the wrapper opening just above the tubesheet. In the U-bend, the fluid is a two-phase mixture of water and steam. At the wrapper opening the fluid is subcooled water (single-phase fluid). Vortex shedding tests of tube arrays with this geometry indicate that vortex shedding does not occur. However, analysis is performed conservatively assuming a vortex shedding mechanism is active using the procedure defined in the ASME Code Section III non-mandatory Appendix N (N-1320). The vortex shedding tube response is negligible.
2. Fluidelastic excitation: Tube spans between supports (tube support plates and anti-vibration bars) are selected as to avoid fluidelastic instability such that the calculated stability ratios do not exceed 0.75. The tubes are conservatively analyzed in accordance with the procedures and suggested inputs given in the ASME Code Section III non-mandatory Appendix N (N-1330).
3. Turbulence: The tube support spacing is selected to minimize the influence of flow turbulence. Evaluation of turbulence induced tube vibration indicates that the tube response is low enough to avoid unacceptable fatigue or fretting wear (Ref. 5.4-20).

5.4.2.1.2.7 Cavitation of Tubes

There has been no experience of cavitation in SG tubes made by MHI. The primary side flow velocity inside of tubes is relatively low compared with that of coolant pipes, and the flow area configuration is relatively smooth from tube inlet to tube outlet. Therefore the pressure drop is small enough not to produce cavitation. The operating pressure inside of the SG tubes (2,235 psig) is high enough compared with the saturation pressure (1,700 psig) of maximum hot leg temperature (617°F). The secondary side flow path around the tubes is also relatively smooth and the flow is natural circulation. Therefore, the pressure drop is small also on the secondary side such that cavitation is not produced. There is no special design criterion for prevention of SG tube cavitation.

5.4.2.1.2.8 Corrosion Allowance for Flow Accelerated Corrosion and Chemical Cleaning

General corrosion or flow accelerated corrosion are negligible on the primary side of the SG because the materials for these parts are stainless steel or Alloy 690, and the flow

velocities are within operating experience. Also the primary side water chemistry is strictly controlled. Therefore, no special corrosion allowance is required for these surfaces.

Most of the materials used on the SG secondary side are low alloy steel or carbon steel that are more susceptible to general corrosion or flow accelerated corrosion. These parts have corrosion allowances based on the operating experience and corrosion test data (Table 5.4.2-3).

5.4.2.1.2.9 Foreign Material Perforated nozzle

The SG feedwater ring is equipped with perforated nozzles that capture foreign materials entering the SG from the feedwater system. Foreign materials, if allowed to reach the tube bundle, can wear against the tubes on the tube bundle periphery at the top of the tubesheet. Small foreign materials that can migrate between the tubes until they reach a low velocity region pose less risk of tube wear. So, the hole size in the feedwater ring perforated nozzles is smaller than the space between the tubes. Larger foreign materials caught inside of feedwater ring pose no risk to the SG and can be retrieved through the feedwater ring inspection port.

5.4.2.1.2.10 Flow Induced Vibration of Secondary Side Internals

The SG internals are analyzed for their vibrational characteristics and structural integrity to confirm their adequacy for long term operation and to minimize the potential for the formation of loose parts.

RG 1.20 (Ref. 5.4-21) applies to prototype configurations where field experience is not available. The US-APWR steam generator secondary side internals, including the primary and secondary separators are a proven design used in many operating steam generators. Therefore, because the design is already field proven, the RG 1.20 recommendation for startup vibration measurements does not apply.

5.4.2.1.2.11 Water Hammer at Feedwater Ring

Bubble collapse water hammer is a condition that was observed in a few older plants. In those cases, the SG feedwater ring configuration and plant operating mode combined to produce significant loadings on the main feedwater piping (water hammer).

Bubble collapse water hammer can occur if a trapped steam volume condenses rapidly. If the vapor is contained within a volume with limited entry/exit area (like a feedwater ring), it is possible for the cold feedwater to condense the hot vapor bubble and to rapidly draw fluid into the space formerly occupied by the steam. The fluid can then produce a dynamic pressure spike with potentially large forces.

The 91TT-1 SG feedwater ring has a welded thermal sleeve and top-discharge perforated nozzles so that water within the feedwater ring cannot drain out and so steam cannot become trapped. The perforated nozzles are located at the highest point in the feedwater system so any vapor within the feedwater ring can vent. Field experience with feedwater ring of this design confirms the absence of water hammer.

5.4.2.1.2.12 Thermal Stratification at Feedwater nozzle

Thermal stratification is a condition within the SG feedwater nozzle that only occurs when the feedwater temperature is cold, the SG is hot, and the feedwater flow rate is not sufficient to fill the feedwater nozzle. These conditions typically only occur during hot standby operation when unheated auxiliary feedwater is used to periodically raise the SG water level. Thermal stratification has been measured in older model SGs and can produce a large number of thermal stress cycles at the interface between a cold layer and a hot layer.

The elevation of the 91TT-1 SG feedwater ring is higher than the feedwater nozzle elevation. This configuration forces the flow to fill the feedwater nozzle/thermal sleeve before flowing into the feedwater ring thus preventing thermal stratification within the nozzle or nearby feedwater piping.

5.4.2.1.2.13 Closure Studs and Nuts

A general discussion of the SG closure studs and nuts materials is given in Section 3.13 and Subsection 5.2.3.6. The closure stud and nut material for man-ways, and hand-holes is low alloy steel as listed in the Table 5.2.3-1. ASME Code requirements, supplemented by RG 1.65 (Ref. 5.4-11), provide significant margin against stress corrosion cracking of the studs.

5.4.2.1.3 Fracture Toughness

The fracture toughness of the SG pressure boundary materials is discussed in Subsection 5.2.3.3.

5.4.2.1.4 Fabrication and Processing of Austenitic Stainless Steel

The primary nozzle safe ends are the only structural portion of the SG pressure boundary where austenitic stainless steel is used. The fabrication and processing of the safe end material is generally described in Subsection 5.2.3.4. The safe ends are hot-worked, not cold-worked, and the estimated yield strength is well below 90 ksi.

The water used for the SG final cleaning or flushing and the control of tools used in abrasive work operations are discussed in Subsection 5.2.3.4.1. Non-sensitization of the material is verified using the methods discussed in RG 1.44 (Ref. 5.4-10).

The thermal insulation of the nozzle safe ends meets the requirements for insulation in contact with austenitic stainless steel as described in Subsection 5.2.3.2.3.

5.4.2.1.5 Compatibility of Tubing with Primary and Secondary Coolants

The primary coolant chemistry specification and the method of chemistry control are described in Subsections 5.2.3.2 and 9.3.4. The secondary water chemistry specification and the method of chemistry control are described in Subsection 10.3.5 and are consistent with branch technical position (BTP) 5-1. These specifications will be referred to establish plant specific chemistry program together with the latest version of the industry guidelines.

The materials used on the SG primary and secondary sides, especially the Alloy TT690 tubing, have excellent corrosion resistance in these environments (Ref. 5.4-19).

5.4.2.1.6 Secondary Side Access

There are four hand-holes located at the top of the tubesheet, two hand-holes located at the uppermost tube support plate elevation, and two man-ways located in the upper shell. Internal access pathways are provided for access to the tube bundle, the feedwater ring, the feedwater nozzle, the moisture separators, the steam nozzle, and much of the shell interior surfaces. The secondary side access openings can be used for the following purposes.

1. Cleaning of the tubesheet,
2. Cleaning of the tube support plates,
3. Cleaning of the tube bundle,
4. Inspection or retrieval of foreign objects or loose parts,
5. Inspection and repair of secondary side internals.

5.4.2.1.7 Prevention of Tube Damage during manufacturing through installation

During SG tube bundle manufacturing, a controlled area is established to prevent the introduction of foreign objects and provide cleanness control. During transportation, storage, and installation, foreign object prevention and cleanness control are required in accordance with MHI procedures.

5.4.2.1.8 Structural Limit of Tube Wall Thinning Under Accident Condition

RG 1.121 (Ref. 5.4-12) describes a methodology for determining the minimum acceptable SG tube wall thickness based on the structural limits, the sizing error of flaws, and the growth rate of flaws. In this evaluation, structural limit of tube wall thinning is analyzed both for normal operating condition and for postulated accident conditions, such as LOCA and main steam line break (MSLB)/feedwater line break (FLB), plus SSE. The extent of structurally allowable tube wall thinning depends on the shape and location of the thinning, and on site specific conditions. The structural limit for tube wall thinning is generally around 60% through wall based on the US-APWR design conditions.

5.4.2.2 Steam Generator Program

5.4.2.2.1 Design Provisions for Permitting Access to Steam Generator Internals

The MHI model 91TT-1 SG has the following design provisions.

1. Man-ways are provided on both hot and cold leg sides of the channel head to provide access for tube bundle inspections and maintenance. The channel head has a cylindrical region just below the tubesheet primary side to enhance access to all tubes, including those on the periphery of the tube bundle. And it is possible to remove each tube from service by plugging.

2. The tube diameter, length, and minimum bend radius permits inspection of the full length of every tube, using currently available eddy current bobbin coil, rotating coil, and array coil probes.
3. Access openings in the secondary shell and wrapper at the uppermost tube support plate elevation permit access to the tube bundle secondary side.
4. The single piece broached tube support plates are equipped with tube lane flow slots that provide vertical access to all elevations of the tube bundle from the top-of-tubesheet hand-holes.
5. Access pathways are provided to the secondary side of the tube bundle, the feedwater ring, the moisture separators, the feedwater nozzle, the steam nozzle, and most of the shell interior to permit inspection, cleaning, repair or removal.
6. Access provisions are available for top-of-tubesheet sludge lancing and foreign object search and retrieval.

5.4.2.2.2 Elements of Steam Generator Program

The steam generator tube integrity program will be established based on the latest version of NEI 97-06 SG program guidelines (Ref. 5.4-17). A program for periodic monitoring of degradation of SG internals will be also implemented in accordance with NEI 97-06. Applicable EPRI SG management program guidelines are followed as described in NEI 97-06. The SG program is in compliance with applicable sections of ASME Code Section XI.

The major elements of the SG program in accordance with NEI 97-06 are outlined below:

1. Assessment of degradation, which includes choosing techniques to test for degradation based on the probability of detection and sizing capability, establishing the number of tubes to be inspected, establishing the structural limits and establishing the flaw growth rate or a plan to establish the flaw growth rate.

2. Steam generator tube inspections which include sampling as supported by the degradation and integrity assessment; obtaining the information necessary to develop degradation, condition monitoring and operational assessments; and qualifying the inspection program by determining the accuracy and defining the elements for enhancing NDE system performance, including technique, analysis, field analysis feedback, human performance and process controls.

3. Integrity assessment which includes condition monitoring (a backward-looking assessment which confirms that adequate steam generator tube integrity has been maintained during the previous operating period) and operational assessment (a forward-looking assessment which demonstrates that the tube integrity performance criteria will be met throughout the next operating period).

4. Steam generator tube plugging and repairs, which include qualification and implementation of the plugging and repair techniques and the repair methods used to re-establish the RCS pressure boundary integrity of steam generator tubes without removing the tube from service.

5. Primary to secondary leak monitoring, which gives operators information needed to safely respond when tube integrity becomes impaired and significant leakage or tube failure occurs.

6. Foreign material exclusion includes secondary side visual inspection and procedures to monitor for loose parts and control of foreign objects to inhibit fretting and wear degradation of the tubing.

7. Maintenance of SG secondary side integrity, which includes design reviews, an assessment of potential degradation mechanisms, industry experience for applicability, inspections, as necessary, to ensure degradation of these components does not threaten tube structural and leakage integrity or the ability of the plant to achieve and maintain safe shutdown.

8. Contractor oversight, which includes review and approval of the scope of work to be performed by a contractor, review and approval of the degradation assessment, review and approval of the contractor's examination procedures, monitoring of the contractor's examination work in progress, review and approval of the contractor's deliverables, review and approval of the tube integrity assessment and associated support documents.

9. Self-assessment of the SG management program to identify areas for program improvement, along with program strengths.

10. Reporting, which includes reports to be submitted to NRC such as reports required by plant technical specifications; non-regulatory reports, which include internal reports that document information within the plant's SG Program and external reports intended to be shared with other utilities.

11. Maintenance of the compatibility of SG tubing with primary and secondary coolant to limit the SG's susceptibility to corrosion.

The SG program requirements of US-APWR are consistent with the SG program requirements provided in NUREG-1431 Standard Technical Specification (Ref.5.4-22) and US-APWR Technical Specification (Chapter 16).

The SG inspection criteria, including tube plugging, and reporting requirements are established in Technical Specification 5.5.9 and Technical Specification 5.6.7, respectively (Chapter 16). The method for determining tube plugging criteria is based on Regulatory Guide 1.121 and the EPRI guidelines specified in NEI 97-06. Other SG requirements include the LCO, surveillance requirements, and primary-to-secondary leakage limits as described in LCO 3.4.13, "RCS Operational Leakage" and LCO 3.4.17 "Steam Generator Tube Integrity".

No potential conflicts of surveillance requirements exist between the technical specification and Article IWB-2000 of ASME Code Section XI, as discussed in 10 CFR 50.55a(b)(2)(iii).

Preservice eddy current inspection in accordance with Section XI of the ASME Code and EPRI PWR SG examination guidelines will be performed over the entire length of each tube in each SG.

The implementation milestone for the SG program is before placing the plant into commercial service.

Table 5.4.2-1 Steam Generator Design Data

Design pressure, primary side (psig)	2,485
Design pressure, secondary side (psig)	1,185
Design pressure, primary to secondary (psi)	1600
Design temperature, primary side (°F)	650
Design temperature, secondary side (°F)	568
Heat transfer area (ft^2/SG)	91,500
Maximum moisture carryover (weight %)	0.10
Overall height (ft-in.)	71-3
Number of U-tubes (/SG)	6,747
U-tube nominal outside diameter (in.)	0.75
Tube-wall nominal thickness (in.)	0.043
Tube pitch (in.)	1.00 (Triangular)

Table 5.4.2-2 Tests and Inspections of Steam Generator Materials

Parts	RT[a]	UT[a]	PT[a]	MT[a]	ET[a]	HLT[a]
Tubesheet (Forging)	-	Yes	-	Yes[c]	-	-
Channel head (Forging)	-	Yes	-	Yes[c]	-	-
Secondary shell and head						
・Forgings	-	Yes	-	Yes[c]	-	-
・Plates	-	Yes	-	-	-	-
Tubes	-	Yes	-	-	Yes	-
Nozzles (Forgings)	-	Yes	-	Yes[c]	-	-
Nozzle safe ends	-	Yes	Yes	-	-	-
Man-way covers	-	Yes	-	-	-	-
Closure studs / nuts	-	Yes[e]	-	Yes[c]	-	-
Weldments						
・Channel head to tubesheet	Yes	Yes[f]	-	Yes	-	-
・Upper head to shell, tubesheet to shell	Yes	Yes[f]	-	Yes	-	-
・Shell longitudinal	Yes	-	-	Yes	-	-
・Man-ways to shell	Yes	-	-	Yes[c]	-	-
・Feedwater nozzles to shell	Yes	Yes[f]	-	Yes	-	-
・Tube to tubesheet	-	-	Yes	-	-	Yes[e]
・Instrument connections (secondary)	-	Yes	-	Yes[c]	-	-
・Nozzle buttering	Yes	Yes[f]	Yes	-	-	-
・Safe end to nozzle	Yes	Yes[f]	Yes	-	-	-
・Tubesheet cladding	-	Yes[b] [e]	Yes	-	-	-
・Channel head cladding	-	Yes[d] [e]	Yes	-	-	-

(a) RT – Radiographic, UT – Ultrasonic, PT - Liquid penetrant, MT - Magnetic particle, ET - Eddy current, HLT – Helium Leak Test.
(b) Flat surface only
(c) PT is alternative in case MT is difficult.
(d) Welding surface to divider plate only.
(e) MHI additional inspection that is not required by ASME Code.
(f) MHI optional inspection for preliminary PSI.

Table 5.4.2-3 Corrosion Allowances of Steam Generator Materials

Parts	Corrosion allowance (mills)
Primary side clad of tubesheet and channel head including nozzles and man-ways	0
Primary side of tube	0
Secondary side of tube	0
Tubesheet secondary surface	60
Secondary side pressure boundary including shell, upper head	60
Secondary side internals made of carbon steel, low alloy steel	60

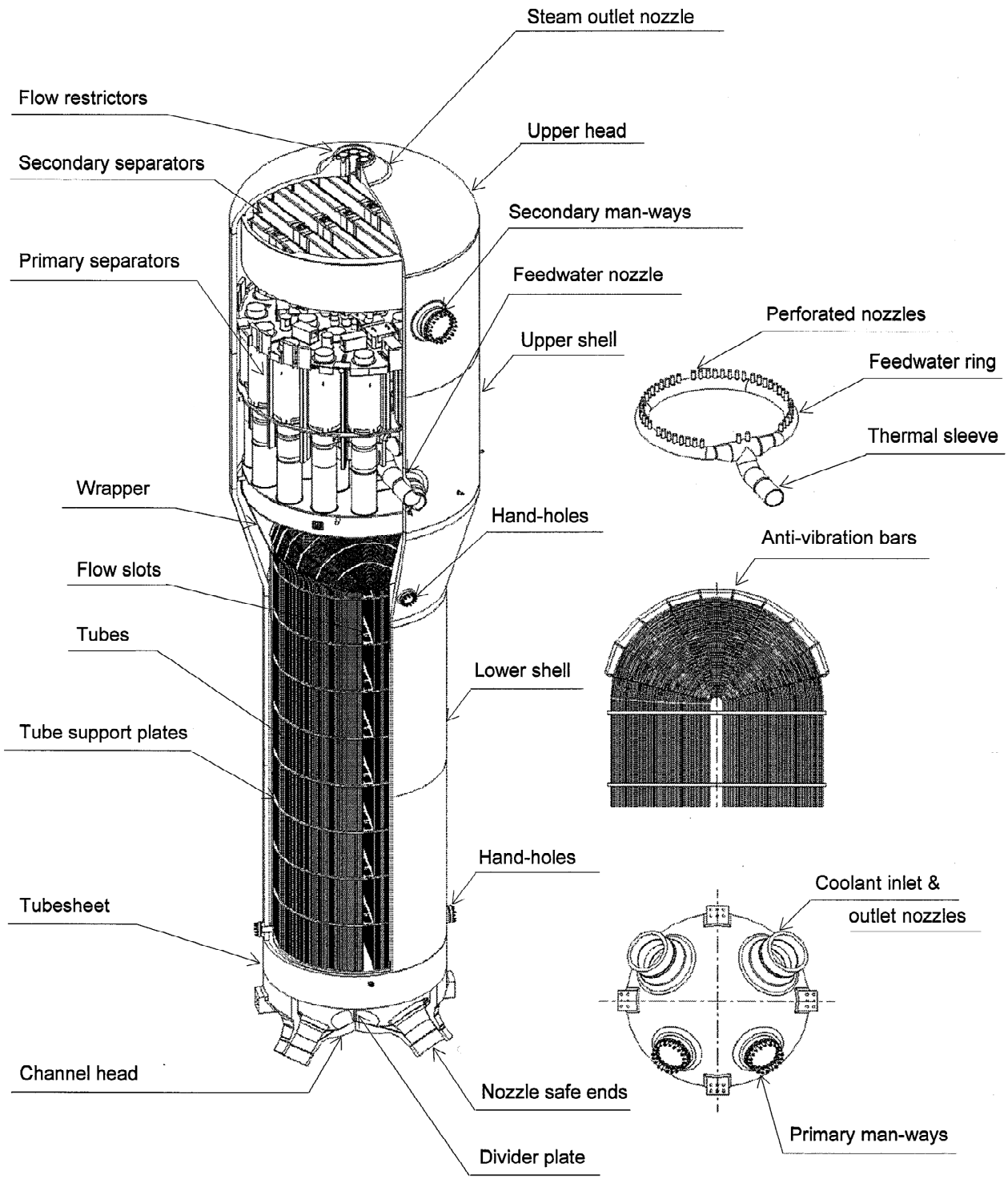

Figure 5.4.2–1 Model 91TT-1 Steam Generator

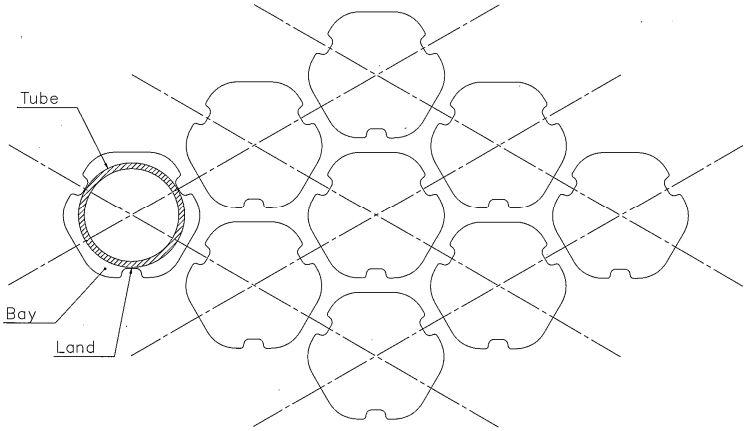

Figure 5.4.2–2 Broached Tube Support Plate Hole Pattern

5.4.3 Reactor Coolant Piping

5.4.3.1 Design Bases

The RCS piping is designed to withstand operating modes of the plant and other anticipated system interactions in terms of pressure and temperatures. The piping is designed as Safety Class 1 and is fabricated to meet the requirements of the ASME Code, Section III, Class 1.

The overall description of the reactor coolant piping system is discussed in Subsection 5.1.

The materials used to fabricate the piping are specified to reduce to a minimum corrosion and erosion while ensuring its compatibility with the operating conditions (see Subsection 5.2.3 for Compatibility of Construction Materials with Reactor Coolant).

Manufacturing processes, such as welding, cutting, heat treating, employed to minimize sensitization of stainless steel are explained in Subsection 5.2.3.

The stress limitations stipulated in ASME Code Section III are followed in the design of the piping. Subsection 5.2 shows the code and material requirements while Subsection 5.2.4 covers the inservice inspections of Class 1 components in which the piping falls under.

Subsection NB of the ASME Code, Section III is the basis for the calculation of the RCS piping thickness.

Because the reactor coolant piping materials is forged from austenitic stainless steel, thermal aging embrittlement is not a concern compared to the stainless steel castings.

The reactor coolant piping is designed using the leak-before-break concept.

5.4.3.2 Design Description

5.4.3.2.1 Piping Elements

The RCS piping covers the piping sections that connect the reactor vessel, the SGs, and the RCPs. The RCS piping configuration is shown in Figure 5.4.3-1.

The piping connected to the reactor coolant piping and primary components are as follows:

- CVCS charging line from the designated check valve up to one reactor coolant cold leg.
- CVCS letdown line and excess letdown line from the reactor coolant crossover leg to the designated isolation valve.
- Pressurizer spray lines from the reactor coolant cold legs up to the spray nozzle on the pressurizer vessel.

- Residual heat removal system (RHRS) pump suction lines from the reactor coolant hot legs up to the designated isolation valve.
- RHRS discharge lines from the designated check valve to the connection to accumulator line.
- Accumulator lines from the designated check valve to the reactor coolant cold leg.
- Safety injection lines from the designed check valve to the reactor vessel nozzle.
- Drain, sample and instrument lines to the designated isolation valve.
- Pressurizer surge line from one reactor coolant hot leg to the pressurizer vessel surge nozzle.
- Pressurizer spray scoop, reactor coolant temperature element installation boss, and the temperature element well itself.
- All branch connection nozzles attached to reactor coolant loops.
- Pressure safety lines from nozzles on top of the pressurizer vessel up to and including the pressurizer safety valves.
- Pressure safety depressurization lines from nozzles on top of the pressurizer vessel up to and including the pressurizer safety depressurization valves.
- Auxiliary spray line from the designed isolation valve up to the main pressurizer spray line.
- Vent line from the reactor vessel head to the designed isolation valves.

The reactor coolant piping major design data are shown in Table 5.4.3-1. Subsection 5.2 covers the materials of construction and codes applied in the manufacture of the reactor coolant piping and its associated parts.

The reactor coolant piping and its fittings are made of forged austenitic stainless steel complying with the requirements of the ASME Code, Sections II (Parts A and C), III and IX. With the exception of the flanged safety valves, all joints and connections are welded.

5.4.3.2.2 Piping Connections

Piping connections for auxiliary systems are above the horizontal centerline of the reactor coolant loop piping, except for the following:

- The residual heat removal pump suction lines, which are 45 degrees down from the horizontal centerline.
- Loop drain lines, CVCS letdown line, CVCS excess letdown line, and the connection for temporary level measurement of water in the RCS during refueling and maintenance operation.
- The differential pressure taps for flow measurement, which are downstream of the SGs of the first 90 degrees elbow.
- Two of the three wells for narrow-range resistance temperature detector, which are instrumented at locations 120 degrees apart around the reactor coolant hot leg with one located at the top of the reactor coolant hot leg.

- The sample connection located at the horizontal centerline of the reactor coolant hot leg and cold leg.

5.4.3.2.3 Encroachment into Coolant Flow

Parts encroaching into the primary coolant loop flow path are limited to the following:

- The spray line inlet connections extend into the reactor coolant cold leg in the form of a scoop so that the velocity head of the reactor coolant loop flow adds to the spray driving force.
- The narrow-range and wide-range temperature detectors are in resistance temperature detector wells that extend into the reactor coolant hot leg and cold leg.
- The sample connections extend into the reactor coolant hot leg and cold leg to obtain a representative sample of the reactor coolant.

5.4.3.3 Design Evaluation

The methods of analysis, loadings and stress limits for the structural evaluation of the RCS piping for each condition are explained in Chapter 3, Subsection 3.9.3.

Sensitized stainless steels and contaminant control are discussed in Subsection 5.2.3.

5.4.3.4 Material Corrosion/Erosion Evaluation

The RCS piping material is selected to minimize corrosion in the reactor coolant water chemistry. (See Subsection 5.2.3 for further explanation.)

A periodic analysis of the coolant chemistry is performed to verify that the reactor coolant water quality meets the specifications. Water quality is maintained to minimize corrosion by using the CVCS and process and post-accident sampling system (PSS), described in Chapter 9.

The austenitic stainless steel material for the RCS piping has high erosion resistance. The RCS piping and its connections are sized based on the flow rates of previous plants long experiences. The flow rate is far below the tolerable erosion values due to water for this material.

The fabrication processes, material selection and RCS water chemistry as described in Subsection 5.2.3 are made to minimize the possibility for stress corrosion cracking.

5.4.3.5 Test and Inspections

Tables 5.4.3-2 and 5.4.3-3 summarize the tests and inspections of the Reactor Coolant Piping materials and weldments respectively.

Piping and fittings are examined over the entire volume of the material in compliance with the applicable requirements of ASME Code, Section III.

The welds and their adjacent surfaces are smoothed to allow preservice and inservice inspection.

Accessible surfaces of the piping, fittings and its welds are liquid penetrant examined in accordance with the ASME Code, Section III criteria.

Table 5.4.3-1 Reactor Coolant Piping Design Parameters

Reactor coolant cold leg Inside diameter (ID) (in.)	31
Reactor coolant cold leg Nominal wall thickness (in.)	3.063
Reactor coolant hot leg Inside diameter (ID) (in.)	31
Reactor coolant hot leg Nominal wall thickness (in.)	3.063
Reactor coolant crossover leg Inside diameter (ID) (in.)	31
Reactor coolant crossover leg Nominal wall thickness (in.)	3.063
Pressurizer Surge Line Piping Inside diameter (ID) (in.)	12.812
Pressurizer Surge Line Piping Nominal wall thickness (in.)	1.594
Nominal Water Volume, all four loops including surge line (ft^3)	1,523
Reactor Coolant Piping: Design pressure (psig)	2,485
Design temperature (°F)	650
Pressurizer Surge Line: Design pressure (psig)	2,485
Design temperature (°F)	680
Pressurizer Safety Valve Inlet Line: Design pressure (psig)	2,485
Design temperature (°F)	680
Pressurizer Safety Depressurization Valve Inlet Line: Design pressure (psig)	2,485
Design temperature (°F)	680

Table 5.4.3-2 Tests and Inspections of the Reactor Coolant Piping Materials

Parts	RT[(a)]	UT[(a)]	PT[(a)]
Fittings and Pipe (Forgings)	-	Yes	Yes
Nozzle (Forgings)	-	Yes	Yes
Instrument Nozzles	-	Yes	Yes

Notes:

(a) RT – Radiographic Examination, UT – Ultrasonic Examination
PT – Liquid Penetrant Examination

Table 5.4.3-3 Inspection Plan for Reactor Coolant Piping Joints

Weldments	RT[(a)]	UT[(a)]	PT[(a)]
Circumferential	Yes	-	Yes
Nozzle to pipe run	Yes[(b)]	-	Yes
Instrument connections	-	-	Yes

Notes:

(a) RT – Radiographic Examination, UT – Ultrasonic Examination
PT – Liquid Penetrant Examination

(b) RT applied only to nozzles exceeding 4 in.

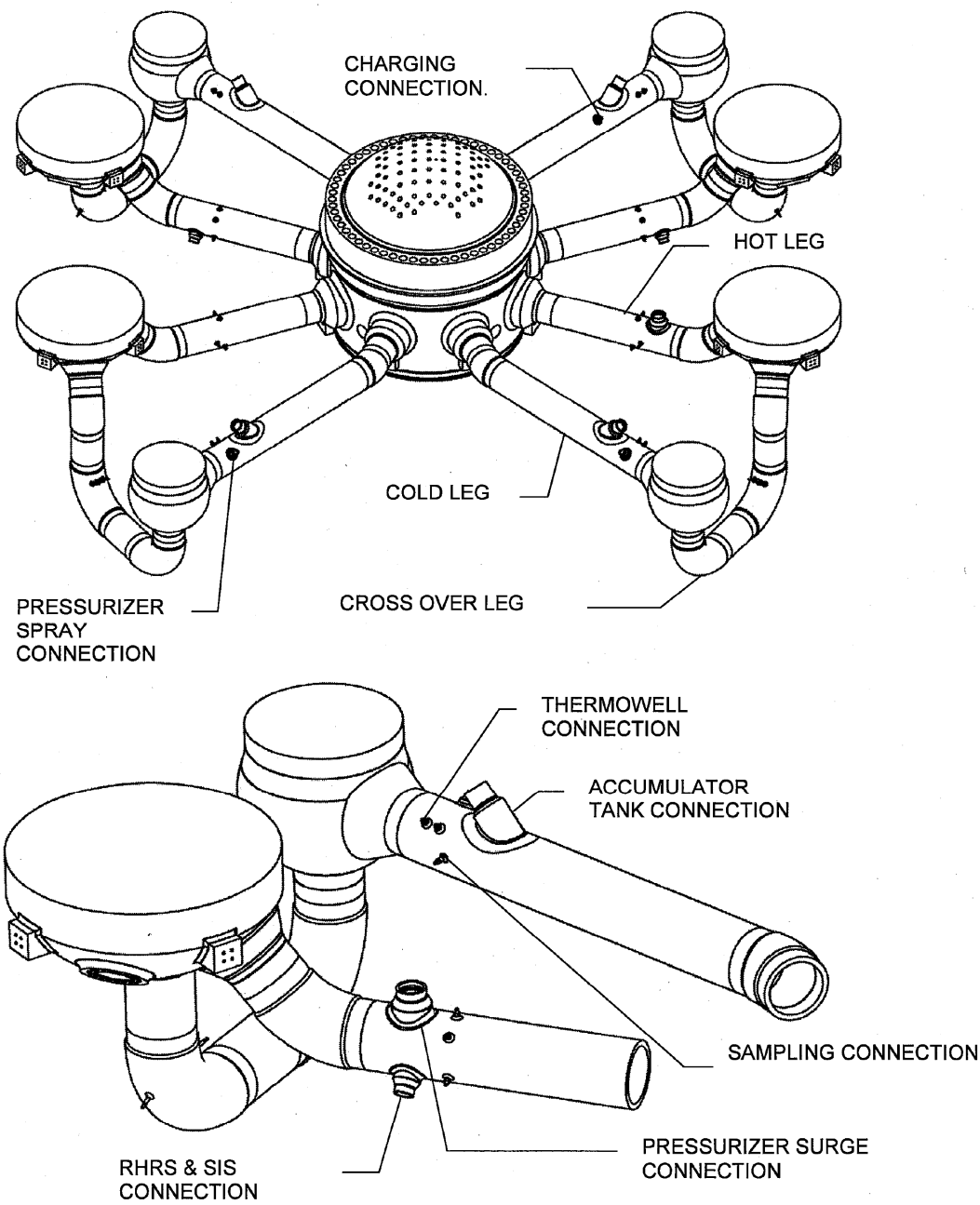

Figure 5.4.3-1 Reactor Coolant Piping

5.4.4 Main Steam Line Flow Restrictor

5.4.4.1 Design Bases

The SG steam outlet nozzle is designed with an integral flow limiter. This design produces a minimal penalty on steam pressure during normal operation but will choke the flow in the event of a design basis main steam line break event. The benefits of the flow restrictor are as follows.

1. Reduction of maximum containment pressure
2. Reduction in the rate of energy release to containment
3. Extension of the cool-down rate of RCS
4. Reduction of the main steam line pipe whip loading
5. Reduction of forces on SG tubes, tube supports, and internals

5.4.4.2 Design Description

The flow restrictor consists of seven Alloy TT690 venturi inserts. They are inserted into the seven holes in the steam outlet nozzle forging of the SG, and are welded to the Alloy 690 clad surface of the nozzle.

5.4.4.3 Design Evaluation

The pressure loss during normal operation is 5.9 psi under the condition of 5.0×10^6 lb/h/SG steam flow. Requirements for materials of construction and manufacturing of the flow restrictor are in accordance with Safety Class 3 of the ANSI/ANS-51.1-1981 (Ref. 5.4-16).

5.4.5 Reserved by NRC as per RG 1.206

This section is reserved by NRC as per RG 1.206.

5.4.6 Reactor Core Isolation Cooling System

This section is for BWRs only and not applicable to US-APWR.

5.4.7 Residual Heat Removal System

The residual heat removal (RHR) system transfers heat from the RCS to the essential service cooling water system through the component cooling water system (CCWS) to reduce the temperature of the reactor coolant during normal plant shutdown and cool down conditions.

The RHRS is also used to transfer refueling water between the refueling cavity and the refueling water storage pit (RWSP) at the beginning and end of the refueling operations.

5.4.7.1 Design Bases

The RHR system is designed to perform the following functions:

- The RHRS pressure boundary and pressure boundary components are designed to meet GDC 2, GDC 4, GDC 5, GDC 19 Control Room, GDC 34, and RG 1.139.
- The RHRS is designed to cool the reactor by removing fission products, decay heat, and other residual heat from the reactor core and the RCS after the initial phase of the normal plant shutdown and cool down. Heat is transferred from the RCS through the SGs during the initial cooldown phase.
- The RHRS is designed to ensure that the reactor core decay heat and other residual heat are safely removed from the reactor using four independent subsystems. Any two of the four subsystems have a 100% capability for safe shutdown.
- Each containment spray (CS)/RHR pump and motor-operated valves receive electrical power from safety buses so that the RHRS safety functions are maintained during a loss of offsite power (LOOP).
- Each CS/RHR pump and isolation valve of one train is connected to a separate electrical train so that the RHRS safety functions are maintained during single failure of the electrical train. This prevents the loss of two or more trains during an electrical failure.
- Assuming the four units of the CS/RHR heat exchangers and four units of the CS/RHR pumps are in service and the supplied essential service water temperature to the component cooling water heat exchanger is at 95°F, the RHRS is designed to provide the capability of reducing reactor coolant temperature during a normal shutdown as follows:

- Reduce reactor coolant temperature to 140°F within 24 hours after reactor shutdown
- Reduce reactor coolant temperature to 130°F within 45 hours after reactor shutdown
- Reduce the reactor coolant temperature to 120°F within 90 hours after reactor shutdown.

Assuming that two units of the CS/RHR heat exchangers and two units of the CS/RHR pumps are in service (assuming a single failure in one train and a second train being out-of-service for preventive maintenance, testing or postulated accident) and the component cooling water (CCW) heat exchanger are supplied with the essential service water temperature at 95°F, the RHRS is capable of reducing the reactor coolant temperature from 350°F to 200°F within 36 hours of the reactor shutdown with two subsystems. A failure modes and effect analysis is provided in Table 5.4.7-1.

- The RHRS is designed to be isolated from the RCS during normal operation. The RHRS is provided with isolation valves in each suction line with interlock capabilities to prevent them from being opened to the RCS above the pressure setpoint.
- The RHRS is designed to remove the fission products decay heat and other residual heat at a rate that assures that the acceptable fuel design limit and the design condition of RCPB are not exceeded.
- The RHRS is designed to provide a portion of the RCS flow to the CVCS during normal plant startup operations to control RCS pressure.
- The RHRS is designed to transfer borated water from the RWSP to the refueling cavity at the beginning of a refueling operation. The refueling operation is initiated at a temperature not greater than 140°F. After refueling, the refueling cavity is drained by pumping the water back or by gravity draining to the RWSP.
- The RHRS is designed to provide cooling for the in-containment RWSP during normal plant operations when required. The system is manually initiated by the operator. The RHRS limits the RWSP water temperature to not greater than 120° F during normal operation.
- The RHRS is designed and equipped with pressure relief valves to prevent RHRS over-pressurization and low temperature over-pressurization for RCS components caused by transients, loss of equipment and possible operator error during plant startup, shutdown, and cold shutdown decay heat removal (Refer to Subsection 5.2.2).
- The RHRS is designed for a single nuclear power unit and is not shared between units.
- The RHRS trains are supplied by separate electrical trains thereby being operationally independent of each other.

- The RHRS is designed to be fully operable by the control room operator during single failure for normal operation except for restoring power to the suction isolation valves.

- The RHRS is designed to be operated during mid-loop or drain down operation to allow maintenance or inspection of the reactor head, SG and reactor coolant pump seals.

- The RHR system is designed to prevent an interfacing system LOCA by two motor operated valves in series on the suction line with power lockout capability. In the event that both these valves are opened, the RHR system is designed to withstand high pressure and discharge the RCS inventory to the in-containment RWSP.

- The CS/RHR pump damage from overheating and loss of flow is prevented by minimum flow lines.

- The RHRS is provided with a leakage detection system to minimize the leakage from those portions of the RHR system outside of the containment that contain or may contain radioactive material following an accident.

- The RHRS system is designed for protection against missiles (Refer to Section 3.5), protection against dynamic effects associated with the postulated rupture of piping and pipe whipping (Refer to Section 3.6), discharging fluids inside and outside the containment (Refer to Section 3.4), fires, loss-of-coolant accidents loads, and seismic effects (Refer to Section 3.7).

5.4.7.2 System Design

5.4.7.2.1 System Description

The RHRS as shown in Figure 5.4.7-1 consists of four independent subsystems, each of which receives electrical power from one of four safety buses. The P&ID for the four loop RHR system is as shown in Figure 5.4.7-2. Each subsystem includes one CS/RHR pump, one CS/RHR heat exchanger, associated piping, valves, and instrumentation necessary for operational control. Table 5.4.7-2 provides the important system design parameters and CS/RHR pump characteristic curve is as shown in Figure 5.4.7-3. The CS/RHR heat exchangers and the CS/RHR pumps have functions in both the CS system and the RHRS. The mode diagram is as shown in Figure 5.4.7-4.

The RHRS is placed in operation when the pressure and temperature of the RCS are approximately 400 psig and 350° F, respectively.

The inlet lines to the RHRS are connected to the hot legs of four reactor coolant loops (RCLs), while the return lines are connected to the cold legs of each of the RCLs. The RHRS suction lines are isolated from the RCS by two normally-closed motor-operated valves with power lockout capability that are connected in series and located inside the containment. Each discharge line is isolated from the RCS by two check valves located inside the containment and by a normally closed motor-operated.

During RHRS operation, each CS/RHR pump takes suction from one of the RCS hot legs by a separate suction line. The pumps then discharge the reactor coolant through the CS/RHR heat exchangers, which transfers heat from the hot reactor coolant fluid to the CCWS circulating through the shell side of the CS/RHR heat exchangers. The cooled reactor coolant is then returned to the RCS cold legs.

CS/RHR pumps transfer borated water from the RWSP to the refueling cavity at the beginning of the refueling operation, and after refueling drain the water back to the RWSP until the water level is brought back to the flange of the reactor vessel.

Coincident with operation of the RHRS, a portion of the reactor coolant flow from the two trains may be diverted downstream of the residual heat exchangers to the CVCS low-pressure isolation letdown line for cleanup and/or pressure control. By regulating the diverted flowrate and the charging flow, the RCS pressure may be controlled.

The RCS cooldown rate is manually controlled by regulating the reactor coolant flow through the tube side of the CS/RHR heat exchangers. The flow control valve in the bypass line around two of the four CS/RHR heat exchangers automatically maintains a constant return flow to the RCS. Instrumentation is provided to monitor system pressure, temperature, and total flow.

When the RHRS is in operation, the water chemistry is the same as that of the reactor coolant. Provision is made for the process sampling system to extract samples from the flow of reactor coolant downstream of the residual heat removal heat exchanger. A local sampling point is also provided on each RHR train between the pump and heat exchanger.

Pump protection is provided using a minimum flow line with an open valve and an orifice at the downstream side of the CS/RHR heat exchanger to the upstream side of the CS/RHR pump suction. This line is sized to provide sufficient pump flow when the CS/RHR pump is shutoff. Also following a LOCA the RHR system is isolated from the RCS and the CSS is placed in operation to provide the make-up source from the RWSP. This is further discussed in Subsection 6.2.2.

The RHRS suction isolation valves in each inlet line from the RCS are interlocked to prevent them from being opened when the RCS pressure is greater than approximately 400 psig. The valves have a control room alarm which alerts the operators if one or both of the valves is not fully closed and the RCS pressure exceeds 400 psig.

5.4.7.2.2 Equipment and Component Description

All components in contact with borated water such as piping, pumps, valves, and equipment for the RHRS are made of austenite stainless steel. However, the shells of the CS/RHR heat exchangers are made of carbon steel. The materials are used to fabricate RHRS components and are in compliance with ASME Section III Materials requirements.

5.4.7.2.2.1 CS/ RHR Pump

The CS/RHR pumps are horizontal, motor-operated centrifugal pumps with mechanical seals. A single unit is provided in each of the four trains. The pumps are installed in separate shielded rooms so that one of the four pumps may be maintained while the others are in operation.

The pumps are sized to deliver reactor coolant flow through the CS/RHR heat exchangers to meet the plant cooldown requirements. The design head of the CS/RHR pumps is determined to be 410 feet considering pressure losses during RHR operation. During normal plant shutdown, mid-loop operation, and safe shutdown, the RHR pumps are aligned to take the suction from the hot leg and discharge the reactor coolant through the CS/RHR heat exchanger and transfer it to the cold leg of the RCS. The use of separate pumps in each RHR train ensures that cooling capacity is only partially lost should one pump become inoperative.

The CS/RHR pump is used for transferring the refueling water from the RWSP to the refueling cavity and may be used for returning the refueling water from the refueling cavity back to the RWSP.

The CS/RHR pumps are protected from overheating and loss of suction flow through pump shutoff by means of minimum flow bypass lines that ensure flow to the pump suction. The minimum flow line is used for pump testing during normal operations. The minimum flow system would preclude any pump damage caused by operator error and operate safely during this period of no flow.

5.4.7.2.2.2 CS/RHR Heat Exchanger

The CS/RHR heat exchangers are provided to cool the reactor coolant during an RHR operation. The CS/RHR heat exchangers are also provided to remove the residual heat during normal shutdown, during shutdown in case of loss of external power sources and during safe shutdown. The CS/RHR heat exchangers are of the shell and U-type heat transfer tubes and are able to accommodate the difference in rates of heat expansion between the tube and the shell. A single unit is provided in each of the four trains and installed in a separate room so that one of the four heat exchangers may be repaired while the others are in operation.

The reactor coolant discharged from the CS/RHR pump is circulated through the tube side of the CS/RHR heat exchanger, while cooling is provided by circulating CCW through the shell side. The tubes are welded to the tube sheet to prevent leakage of the reactor coolant.

The CS/RHR heat exchanger design is based on heat loads and temperature difference between reactor coolant and CCW during normal and safe shutdown.

5.4.7.2.2.3 Valves

A. CS/RHR pump hot leg isolation valves

Two normally closed motor-operated gate valves are aligned in the suction line in series in each of four RHR trains with power lockout capability between the high-

pressure RCS and the low pressure RHRS. These valves isolate the RCS from the low pressure RHR piping.

These valves compose part of the RCPB. The second valve is a containment isolation valve. The first and the second valves in each train are interlocked so that they cannot be opened when the RCS pressure is above 400 psig and when the corresponding spray header isolation valves are not closed to prevent spraying the reactor coolant through the CS nozzle. These valves have a control room alarm, which alerts the operators if one or both the valves are not fully closed and the RCS pressure exceeds 400psig.

B. RHR discharge line containment isolation valve

There is one normally closed motor operated gate valve installed in each CS/RHR pump discharge line outside of the containment. These valves have electrical power removed during normal plant conditions. They are opened by the operator from the main control room (MCR), during circulation cooling performed by the CS/RHR pump and heat exchanger for the RWSP after stopping of the CS operation following an accident, during full flow pump testing and during normal RHRS operation.

C. RHR flow control valves

A single motor-operated globe valve with a throttling capability is placed in each of the four RHR return lines. These valves are positioned from the MCR. These valves are utilized for warming operations at initiation of the RHR operation and provide the capability to control the RHR flow rate during initial system warm-up and during safe shutdown operations.

D. Low-pressure letdown line isolation valve

A single normally closed air-operated valve is placed in each of the two low pressure letdown lines connected to two of the four RHR trains. During the normal plant cool down operation, one of these valves is open to divert a portion of the RCS flow to the CVCS for the purpose of purification and RCS inventory control.

Additionally at mid-loop operation during plant shutdown, these valves are automatically closed and the CVCS is isolated from the RHRS after receiving the RCS loop low-level signal to prevent loss of RCS inventory.

E. CS/RHR heat exchanger outlet flow control valve

These are air-operated butterfly valves and are placed in each of two CS/RHR heat exchanger outlet lines out of four.

The rate of the opening of the valves can be manually adjusted from the MCR, and the valves fail in the ”open” position to ensure a flow path of RHRS and CSS. These valves provide the capability to control the flow rates through the heat exchangers by operator’s action based on the RCS temperature changes during plant cool down.

F. CS/RHR heat exchanger bypass-flow control valve

These are air-operated butterfly valves and are placed in each of the two CS/RHR heat exchanger bypass lines.

These valves, together with the CS/RHR heat exchanger outlet flow control valve, control the reactor coolant return flow during plant cool down operation. The rate of opening of the CS/RHR heat exchanger outlet flow control valve is set and these valves are automatically positioned from the MCR and fail in the “closed” position. These valves receive transmitted signals from the flow controller which then maintains a constant flow rate through the RHR system.

G. CS/RHR pump full-flow test line stop valve

One normally closed motor-operated globe valve with throttling capability is placed in each of four CS/RHR pump test lines. These lines are located inside the containment and are routed from the pump test discharge lines to the RWSP. These valves are manually opened by operator action when the pumps are aligned for pump full-flow test during plant shutdown. These valves are also manually opened by the operator from the MCR and align the CS/RHR pumps to remove heat from the containment for an extended period of time by continuous circulation of water from the RWSP once the CS is no longer required.

H. CS/RHR pump suction relief valve

One relief valve is installed in each of the four CS/RHR pump suction lines. These valves protect the CS/RHR piping from over-pressurization assuming the most severe over-pressure transient during plant startup and normal cool down operation. These valves provide containment boundary functions since they are connected to the containment boundary piping. Each relief valve has a relief capacity of approximately 1,320 gpm at an approximate set pressure of 470 psig.

These valves also provide the low-temperature over-pressure protection for RCS components when the RHRS is aligned to the RCS to provide decay heat removal during plant shutdown and startup operations. These valves discharge to the RWSP. During adverse occurrences, such as a stuck open valve, this prevents flooding of the safety related equipment of the RHR system.

I. CS/RHR heat exchanger outlet relief valve

One pressure relief valve is installed in each of the four CS/RHR heat exchanger discharge lines. These valves are designed to protect the RHR piping from over-pressurization due to possible back-leakage from RCS or thermal expansion of the trapped water, isolating the RHRS from the RCS. Each relief valve has a flow capacity of approximately 20gpm at an approximate set pressure of 900 psig. These valves discharge to the pressurizer relief tank to prevent flooding of the safety related equipment of RHR system.

5.4.7.2.3 System Operation

5.4.7.2.3.1 Plant Startup

During the initial stage of the plant startup, the RCS is completely filled with water. Plant startup includes bringing the reactor from the cold shutdown condition to no-load operating temperature and pressure and subsequently to power operation. Generally, while in the cold shutdown condition, decay heat from the reactor core is being removed by the RHRS. The number of pumps and heat exchangers in service depends upon the heat load present at the time.

At the beginning of plant startup, at least one CS/RHR pump is operating, and the RHRS is aligned to the RCS to divert a portion of the RHR flow through a low pressure letdown path to the CVCS to control the RCS pressure. When the reactor coolant pumps are started, the CS/RHR pumps are stopped and the heat is removed by the SGs if necessary. Once the pressurizer steam bubble formation is complete, the RHRS would be isolated from the RCS.

5.4.7.2.3.2 Normal Operation

CS/RHR pumps are not in-service during the normal operation. Normal operation includes the power generation and hot standby operation phases. During normal operation the RHRS is not used and the CS system is on standby. The CS/RHR pumps are normally aligned to take the suction from the RWSP. The tubes of the CS/RHR heat exchangers are filled with borated water and the shells of the heat exchangers are filled with CCW.

5.4.7.2.3.3 Plant Shutdown

Plant shutdown is the operation that brings the reactor plant from normal operating temperature and pressure to refueling condition. The initial phase of plant shutdown is accomplished by transferring heat from the RCS to the steam and power conversion system through SGs. Depressurization is accomplished by spraying reactor coolant into the pressurizer which cools and condenses the pressurizer steam bubble.

The second phase of cooldown starts with the RHRS being placed in operation when the reactor coolant temperature and pressure are reduced to approximately 350°F and 400 psig, respectively, approximately four hours after reactor shutdown. Startup of the RHRS includes a warm up period, during which time reactor coolant flow rate is slowly increased through the heat exchangers to protect the piping/components in the RHR system from thermal shock.

The rate of heat removal from the reactor coolant is manually controlled by the operator by regulating the coolant flow through the CS/RHR heat exchanger. This is accomplished by re-opening the CS/RHR heat exchanger outlet flow control valves in two subsystems. The CS/RHR heat exchanger outlet flow control valves are positioned by the operator who maintains the total flow rate constantly through the CS/RHR heat exchanger bypass-flow control valves.

The reactor cool down rate is limited by RCS equipment cooling rates of the reactor vessel and the SG based on allowable stress limits and the operating temperature limits of the CCWS. As the RCS temperature decreases, the reactor coolant flow through the CS/RHR heat exchangers is increased by adjusting the control valve in each heat exchanger's tube side outlet line.

When the operation of two RHR subsystems with bypass flow control cannot keep the cool down rate, then the other two subsystems without bypass-flow control are sequentially placed in-service. The reactor coolant flows with a constant flow rate through the CS/RHR heat exchanger of the subsystem without the bypass-flow. During plant cooling, the pressurizer is fully filled with water and the RCS pressure may be controlled by regulating the charging flow to the RCS and the low pressure letdown flow to the CVCS.

Should both the RHR heat exchanger outlet and bypass flow control valves fail simultaneously (i.e., loss of instrument air), then the maximum cool down rate may be increased. In this case the operator can limit the cooldown rate by throttling the RHR flow control valve.

After the reactor coolant pressure is reduced and the temperature is 140°F and the system is depressurized, the refueling or maintenance operations are initiated.

5.4.7.2.3.4 Safe Shutdown

It is expected that the systems normally used for safe shutdown (cooldown to cold shutdown condition) will be available anytime the operator chooses to perform a reactor cool down. However, to ensure that the plant can be taken to cold shutdown, the safety-grade cold shutdown design enables the RCS to be taken from no-load temperature and pressure to cold conditions using only safety-related systems, with only onsite or offsite power available, and assuming the most limiting single failure.

Should portions of normal shutdown systems be unavailable, the operator will maintain the plant in a hot standby condition while making those normal systems functional. Appropriate procedures are provided for the use of safety shutdown backups contingent upon the inability to make normal systems available. The operator should use any of the normal systems that are available in combination with the safety-related backups for the systems that cannot be made operable. The safe shutdown provisions are to be used only upon the inability to make available the equipment normally used for the given function.

The safety-grade cold shutdown design enables the operator to maintain the plant in hot standby for approximately up to 14 hours. Since it is assumed that the reactor coolant pumps are not available, circulation of the reactor coolant is provided by natural circulation with the reactor core as the heat source and the SGs as the heat sink. Heat removal is accomplished through the main steam relief valves (safety) and emergency feedwater system.

Boration of the RCS is initiated prior to cooling the RCS. The safety injection (SI) pumps are used to provide borated water to the RCS. The borated water is delivered to the RCS through the safety injection lines. The flow paths have provisions for flow control. To

accommodate this addition to RCS inventory, continuous letdown is discharged from the emergency letdown line to the RWSP.

To ensure that the accumulators do not repressurize the RCS, the accumulatror discharge valves are closed prior to the RCS pressure dropping below the accumulator discharge pressure. If the accumulator discharge valve fails to close, the nitrogen gas discharge into the RCS is prevented by depressurizing the corresponding accumulator through opening the accumulator nitrogen isolation valve and the accumulator nitrogen discharge valve.

The decay heat removal and cooling following cooldown through the main steam relief valve (safety) and emergency feedwater system is performed by the RHRS. It is designed that two of the four RHRS trains, assuming a single failure in one train and out of service in a second train, achieve this function in conjunction with the CCWS and Essential Service Water System. The cooldown rate of the RCS is manually controlled by the motor-operated RHR flow control valves to jog-throttle.

5.4.7.2.3.5 Refueling

The RHRS utilizes one or more CS/RHR pumps during refueling to transfer borated water from the RWSP to the refueling cavity. During this operation, one RHR train is selected for water transport with the CS/RHR pump hot leg isolation valves being closed and the CS/RHR pump RWSP isolation valves opened. The refueling cavity is prepared for flooding and the vessel head is removed to its storage pedestal using the containment polar crane. The refueling water is transferred through the CS/RHR pumps into the reactor vessel through the RHR return lines and into the refueling cavity through the open reactor vessel flange. The reactor vessel head is unbolted to begin refueling operation and the head is lifted as the refueling water increases. After the water level reaches the normal refueling level the CS/RHR pumps are stopped, the RWSP isolation valves are closed, the CS/RHR pump hot leg suction isolation valves from the RCS are re-opened and the pumps restarted to initiate the RHR operation.

During refueling, the RHRS is maintained in-service with the number of pumps and heat exchangers in operation as required by the heat load.

Following refueling, the CS/RHR pumps are used to drain the water in the refueling cavity to the top of the reactor vessel flange. This is done by pumping water from the RCS through the pump full-flow test lines to the RWSP as the reactor vessel head is lowered into place. The vessel head is then replaced and the normal RHRS flow path is re-established. The refueling cavity can also be gravitationally drained to the RWSP without the operation of pumps.

5.4.7.2.3.6 Mid-loop and Drain Down Operations

The RHR system is used to provide core cooling when the RCS must be partially drained to allow maintenance or inspection of the reactor head, SGs, or reactor coolant pump seals.

Mid-loop operation is a residual heat removal (RHR) operation where the RCS water level is brought to the middle portion of the main coolant piping (MCP) during outage for

oxidation operation and installation/removal of steam generator (SG) nozzle cover. When the RCS water level decreases abnormally, air inadvertently gets into the residual heat removal system with the possibility of affecting the RHRS.

The features of mid-loop operation in US-APWR are shown as follows;

A. Chemical addition (hydrogen peroxide)

   Hydrogen peroxide addition is adopted instead of aeration because it decreases the duration of the mid-loop operation. As a result, the mid-loop operation is needed only to drain the SG primary side water while being able to maintain a high RCS water level for most of the oxidation operation.

B. High RCS water Level

   Keeping a high RCS water level for the duration of SG primary side water drainage and vacuum venting operation decreases the possibility of air intake to the RHRS. Since the SG installation level for the US-APWR is higher than in most plants, a high RCS water level during the oxidation operation does not affect the SG nozzle cover, nor interfere with the SG maintenance.

C. Redundant water level instrument

   Installation of a redundant water narrow level instrument enhances reliability of the mid-loop operation.

D. Interlock for abnormal water level decrease

   When the water level of RCS drops below the mid-loop level, low pressure letdown lines are isolated automatically. This interlock is useful to prevent loss of reactor coolant inventory

E. Water supply from spent fuel pit

   When the water level of RCS abnormally drops and all RHR pumps cannot be operated because of air intake, operator can supply water from the spent fuel pit (SFP) to the reactor vessel. Since the RHRS is connected to the SFP, SFP water can be injected by gravity.

The RHR system is used to provide core cooling when the RCS must be partially drained to allow maintenance or inspection of the reactor head, SGs, or reactor coolant pump seals.

The level in the primary system is lowered to near the mid-line of the hot and cold legs. The RCS water level should be higher than 0.33 feet above the mid-loop and the RHR flow of 1,550 to 2,650 gpm should be supplied. At this water level, the air/water interface is at close proximity to the RHR suction nozzles located on the hot legs, and thus,

reduces the possibility of air entrainment into the RHR pump suction. Air ingestion by an RHR pump can cause loss of pump function, creating the potential for loss of RHR.

5.4.7.2.3.7 Applicable Codes and Classifications

The suction side of the RHR piping up to the second isolation valve is Equipment Class 1, and the rest of RHRS is designed as Equipment Class 2. Component codes and classifications are given in Section 3.2 (Shell side of CS/RHR heat exchanger is Equipment Class 3)

5.4.7.2.3.8 Manual Actions

The RHRS is designed to be fully operable from the control room and the remote shutdown panel for normal operations except for restoring power to the suction isolation valves prior to RHR initiation. Manual operations required by the control room operator are restoring power to and opening the suction isolation valves, opening RHR flow control valves and low-pressure letdown line isolation valves and RHR discharge line containment isolation valves, and starting the RHR pumps. During normal cooldown, there is adequate time and accessibility to perform these actions. A failure mode and effects analysis is mentioned in Table 5.4.7-1

5.4.7.2.4 Reliability Test and Inspection

As the RHRS functions are part of the containment spray system (CSS), periodic tests and inspections of the RHRS subsystems are conducted in conjunction with those conducted on CSS components to ensure proper functioning of each subsystem component.

5.4.7.2.5 Instrumentation and Controls

The RHRS contains instrumentation to monitor system performance. Instrumentation for control and monitoring of the RHRS should meet the requirements of the Institute of Electrical and Electronic Engineers Standard 279-1971, “Criteria for Protection Systems for Nuclear Power Generating Stations”. System parameters necessary for system operations are monitored in the MCR include the following:

1. CS/RHR pump discharge flow rate

   One differential pressure transmitter is installed in each of the four discharge lines of the CS/RHR pump with low flow rate alarm. Flow rate indication is provided in the MCR for the purpose of monitoring the pump discharge flow rate. The flow rate indication is also provided to the operator console in the remote shutdown panel. It is also used for tests required to asses the performance of CS/RHR pumps.

2. CS/RHR pump minimum flow rate

   One differential pressure transmitter is installed in each of four CS/RHR pump minimum flow lines with indication in the MCR.

3. CS/RHR flow rate

The differential flow rate between the CS/RHR pump discharge flow rate and the CS/RHR pump minimum flow rate is indicated to the operator console in the MCR and the remote shutdown panel, which is then recorded as the CS/RHR process flow of each train. Each channel provides a signal to instrument and control for generation of low flow rate alarm in the MCR to indicate abnormal CS/RHR flow condition. Two of four channels are also used to automatically control the RHR return flow by controlling the CS/RHR heat exchanger bypass-flow control valves.

4. CS/RHR heat exchanger inlet and outlet temperature indication

   Instrumentation is placed both upstream and downstream of each of the CS/RHR heat exchangers for the purpose of monitoring the temperature of RCS supply and returning water that also continuously enters and leaves the CS/RHR heat exchanger. Temperature indication is provided in the MCR and remote shutdown panel.

5. CS/RHR pump suction and discharge pressure indication

   A single pressure transmitter is placed in the suction and discharge line of each CS/RHR pump to check both the pump head pressure during minimum flow test and the full flow test and the pump discharge pressure during the normal RHR operations and the accidents. The indication is provided to the operator console in the MCR and the remote shutdown panel. It is also used for tests required to asses the performance of CS/RHR pumps.

6. CS/RHR pump hot leg suction isolation valve

   These motor-operated valves connected to the RCS hot leg are interlocked to prevent them from being opened unless the corresponding CS header isolation valves are closed. This prevents aligning the system in such a way as to spray RCS coolant through the CS nozzle. These valves are interlocked so that they cannot be opened when the RCS pressure exceeds 400 psig. These valves have no automatic valve closure interlock since CS/RHR pump suction relief valves are used for low temperature overpressure protection. These valves are provided with valve position indication and alarm in the MCR and the capability of online testing from the MCR (Refer to Section 7.6).

7. RHR discharge line C/V isolation valve

   These motor operated valves are interlocked so that they cannot be opened unless the corresponding CS header isolation valves are closed. This prevents aligning the system if the CS/RHR pumps runout. These valves are provided with valve position indication in the MCR and the capability of online testing from the MCR (Refer to Section 7.6).

5.4.7.3 Performance Evaluation

The capability of the RHRS to reduce reactor coolant temperature is evaluated through the use of heat balance calculations on the RCS, RHRS, and CCWS at stepped intervals following the initiation of RHR operation. Heat removal through the RHR and component cooling heat exchangers is calculated at each interval by use of standard water-to-water

heat exchanger performance correlations; the resultant fluid temperatures for the RCS, RHRS, and CCWS are calculated and used as input to the next interval's heat balance calculation.

Assumptions utilized in the series of heat balance calculations describing plant normal RHRS shutdown are as follows;

1. Four CS/RHR heat exchangers and four CS/RHR pumps are in service.
2. Four CCW heat exchangers and four CCW pumps are in service.
3. Four essential service water pumps are in service.
4. RHR operation is initiated four hours after reactor shutdown.
5. RHR operation begins at a reactor coolant temperature of 350°F.
6. Thermal equilibrium is maintained throughout the RCS during cooldown (i.e., one reactor coolant pump in operation whenever the reactor coolant temperature is above 160°F).
7. CCW temperature during cooldown is limited to a maximum of 110°F.
8. RCS cooldown rate of 50°F/h is not exceeded.
9. Essential Service Water temperature during cooldown is 95°F.

The assumption utilized in the series of heat balance calculations describing plant safe shutdown RHR cooldown are as follows;

1. Two CS/RHR heat exchangers and Two CS/RHR pumps are in service.
2. Two CCW heat exchangers and Two CCW pumps are in service.
3. Two essential service water pumps are in service.
4. RCPs are not in service.
5. RHR operation is initiated four hours after reactor shutdown.
6. RHR operation begins at a reactor coolant temperature of 350°F.
7. Thermal equilibrium is maintained throughout the RCS during the cooldown.
8. CCW temperature during cooldown is limited to a maximum of 110°F.
9. RCS cooldown rate of 50°F/h is not exceeded.
10. Essential Service Water temperature during cooldown is 95°F.

The RCS temperature transient curves are provided in Figure 5.4.7-5 and Figure 5.4.7-6. The limiting single failure modes and effects analysis is provided in Table 5.4.7-1.

Table 5.4.7-1 Failure Modes and Effect Analysis (Sheet 1 of 7)

Component	Failure Mode	Plant Condition	Effect on System Operation	Failure Detection Method	Remarks
1. A-CS / RHR Pump (B,C and D analogous)	Failure to deliver working fluid	Safe shutdown (RHR cooling function)	Failure results in loss of reactor coolant flow from hot leg of RCS loop “A” through “A” RHRS. Failure reduces redundancy of shutdown cooling train. No safety related effect since there are three other CS/RHR pumps. All of the other pumps will provide shutdown cooling. Two RHRS trains are required.	CS/RHR pump operating information in the MCR includes flow, inlet/discharge pressure.	
	Failure to deliver working fluid, while one residual heat removal subsystem is out of service.		Failure result in loss of reactor coolant flow from hot leg of RCS loop “A” through “A” RHRS. Failure reduces redundancy of shutdown cooling train. No safety related effect since there are two other CS/RHR pumps. Both pumps will provide shutdown cooling. Two RHRS trains are required.		

Table 5.4.7-1 Failure Modes and Effect Analysis (Sheet 2 of 7)

Component	Failure Mode	Plant Condition	Effect on System Operation	Failure Detection Method	Remarks
2.CS/RHR pump hot leg suction 1st isolation Valve RHS-MOV-001A (B,C and D analogous)	Failure to open on demand.	Safe shutdown (RHR cooling function)	Failure blocks reactor coolant flow from hot leg of RCS loop “A” through “A” RHRS. Failure reduces redundancy of shutdown cooling train. No safety related effects since reactor flow from hot leg of RCS loop “B”,”C”,”D” flow through each “B”,”C”,”D” RHRS. Two RHRS trains are required. (1st isolation valve and CS/RHR pump in same train are on same AC electrical train. And 2nd isolation valves are on each different DC electrical train. Therefore single failure of electrical train does not result in loss of two or more trains shutdown cooling.)	Valve open/close position indication in MCR.	1st isolation valve RHS-MOV-001A,B,C,D are on each AC electrical train “A”,”B”,”C”,”D”. 2nd isolation valves RHS-MOV-002A,B,C,D are on each DC electrical train “A”,”B”,”C”,”D”. A-,B-,C-,D-CS/RHR pump are on each AC electrical train “A”,”B”,”C”,”D”.
	Failure to open on demand while “B” residual heat removal subsystem is out of service.		Failure blocks reactor coolant flow from hot leg of RCS loop “A” through “A” RHRS. Failure reduces redundancy of shutdown cooling train. No safety related effects since reactor flow from hot leg of RCS loop ”C”,”D” flow through each “C”,”D” RHRS. Two RHRS trains are required.		

Table 5.4.7-1 Failure Modes and Effect Analysis (Sheet 3 of 7)

Component	Failure Mode	Plant Condition	Effect on System Operation	Failure Detection Method	Remarks
(Cont.)	Failure to close on demand.	Safe shutdown (Isolation of RHRS from RCS in case of leak in RHR line during shutdown cooling)	Failure reduces redundant of isolation RHRS from RCS. No safety related effects since each hot leg suction line has two series valves (1st and 2nd isolation valves). “A” RHRS is isolated from RCS by closing of 2nd isolation valve RHS-MOV-002A. (Each isolation valve has a different power supply. 1st is on AC electrical train and 2nd is on DC electrical train. Therefore single failure of electrical train does not prevent isolation of RHRS.)		
	Failure to close on demand while one AC electrical train is out of services.		Failure reduces redundant of isolation RHRS from RCS. No safety related effects since each hot leg suction line has two series valves (1st and 2nd isolation valves). “A” RHRS is isolated from RCS by closing of 2nd isolation valve RHS-MOV-002A.		

Table 5.4.7-1 Failure Modes and Effect Analysis (Sheet 4 of 7)

Component	Failure Mode	Plant Condition	Effect on System Operation	Failure Detection Method	Remarks
3.CS/RHR pump hot leg suction 2nd isolation Valve RHS-MOV-002A (B,C and D analogous)	Failure to open on demand.	Safe shutdown (RHR cooling function)	Failure blocks reactor coolant flow from hot leg of RCS loop “A” through “A” RHRS. Failure reduces redundancy of shutdown cooling train. No safety related effects since reactor flow from hot leg of RCS loop “B”,”C”,”D” flow through each “B”,”C”,”D” RHRS. Two RHRS trains are required. (1st isolation valve and CS/RHR pump in same train are on same AC electrical train. And 2nd isolation valves are on each different DC electrical train. Therefore single failure of electrical train does not result in loss of two or more trains shutdown cooling.)	Valve open/close position indication in MCR.	1st isolation valve RHS-MOV-001A,B,C,D are on each AC electrical train “A”,”B”,”C”,”D”. 2nd isolation valves RHS-MOV-002A,B,C,D are on each DC electrical train “A”,”B”,”C”,”D”. A-,B-,C-,D-CS/RHR pump are on each AC electrical train “A”,”B”,”C”,”D”.
	Failure to open on demand while “B” residual heat removal subsystem is out of service.		Failure blocks reactor coolant flow from hot leg of RCS loop “A” through “A” RHRS. Failure reduces redundancy of shutdown cooling train. No safety related effects since reactor flow from hot leg of RCS loop ”C”,”D” flow through each “C”,”D” RHRS. Two RHRS trains are required.		

Table 5.4.7-1 Failure Modes and Effect Analysis (Sheet 5 of 7)

Component	Failure Mode	Plant Condition	Effect on System Operation	Failure Detection Method	Remarks
(Cont.)	Failure to close on demand.	Safe shutdown (Isolation of RHRS from RCS in case of leak in RHR line during shutdown cooling)	Failure reduces redundant of isolation RHRS from RCS. No safety related effects since each hot leg suction line has two series valves (1st and 2nd isolation valves). “A” RHRS is isolated from RCS by closing of 1st isolation valve RHS-MOV-001A. (Each isolation valve has a different power supply. 1st is on AC electrical train and 2nd is DC electrical train. Therefore single failure of electrical train does not prevent isolation of RHRS.)		

Table 5.4.7-1 Failure Modes and Effect Analysis (Sheet 6 of 7)

Component	Failure Mode	Plant Condition	Effect on System Operation	Failure Detection Method	Remarks
4.RHR discharge line containment isolation valve RHS-MOV-021A (B,C and D analogous)	Failure to open on demand.	Safe shutdown (RHR cooling function)	Failure prevent A-CS/RHR pump from discharging to RCS cold leg “A”. No safety related effect since there are three other RHR discharge line containment isolation valves. All of the other valves will be opened and three residual heat removal subsystems will achieve shutdown cooling. 2 subsystems are required.	Valve open/close position indication in MCR.	
	Failure to open on demand while one residual heat removal subsystem is out of service.		Failure prevent A-CS/RHR pump from discharging to RCS cold leg “A”. No safety related effect since there are two other RHR discharge line containment isolation valves. Both of the other valves will be opened and two residual heat removal subsystems will achieve shutdown cooling. two subsystems are required.		

Table 5.4.7-1 Failure Modes and Effect Analysis (Sheet 7 of 7)

Component	Failure Mode	Plant Condition	Effect on System Operation	Failure Detection Method	Remarks
5.RHR flow control valve RHS-MOV-026A (B,C and D analogous)	Failure to jog open on demand.	Safe shutdown (RHR cooling function)	Failure prevents throttling A-CS/RHR pump flow. No safety related effect since three other RHR flow control valves can be jog opened and throttle RHR flow three residual heat removal subsystems will achieve shutdown cooling. two subsystems are required.	Valve open/close position indication in MCR.	
	Failure to jog open on demand while one residual heat removal subsystem is out of service.		Failure prevents throttling A-CS/RHR pump flow. No safety related effect since two other RHR flow control valves can be jog opened and throttle RHR flow two residual heat removal subsystems will achieve shutdown cooling. two subsystems are required.		

Table 5.4.7-2 Equipment Design Parameters (Sheet 1 of 2)

Containment Spray/Residual Heat Removal Pump	
Number	4
Type	Horizontal, centrifugal type
Power Requirement (kW)	400
Design Flow Rate (gpm)	3,000
Design Head (ft)	410
Minimum Flow Rate (gpm)	355
Maximum Flow Rate (gpm)	3,650
Design Pressure (psig)	900
Design Temperature (° F)	400
Material	Stainless Steel
Normal Operating Temperature (° F)	32 ~ 356
Fluid	Reactor coolant, Boric acid water
Radioactive Concentration (kBq/cm^3)	≥ 37
NPSH Available	17.9 ft at 3,650 gpm
NPSH Required	16.4 ft at 3,650 gpm
Equipment Class	2

Table 5.4.7-2 Equipment Design Parameters (Sheet 2 of 2)

Containment Spray / Residual Heat Exchanger		
Number	4	
Type	Horizontal U-tube type	
Heat Transfer Rate (Btu/h)	17.1×10^6	
Overall heat Transfer Coefficient and the effective heat transfer area, UA (Btu/h/° F)	1.852×10^6	
	Tube side	Shell side
Design Pressure (psig)	900	200
Design Temperature (° F)	400	200
Design Flow Rate (lb/h)	1.5×10^6	2.2×10^6
Design Inlet Temperature (° F)	120	99.7
Design Outlet Temperature (° F)	108.7	107.4
Material	Stainless steel	Carbon Steel
Fluid	Reactor coolant, boric water	Component cooling water
Radioactive Concentration (kBq/cm^3)	≥ 37	<37
Equipment Class	2	3

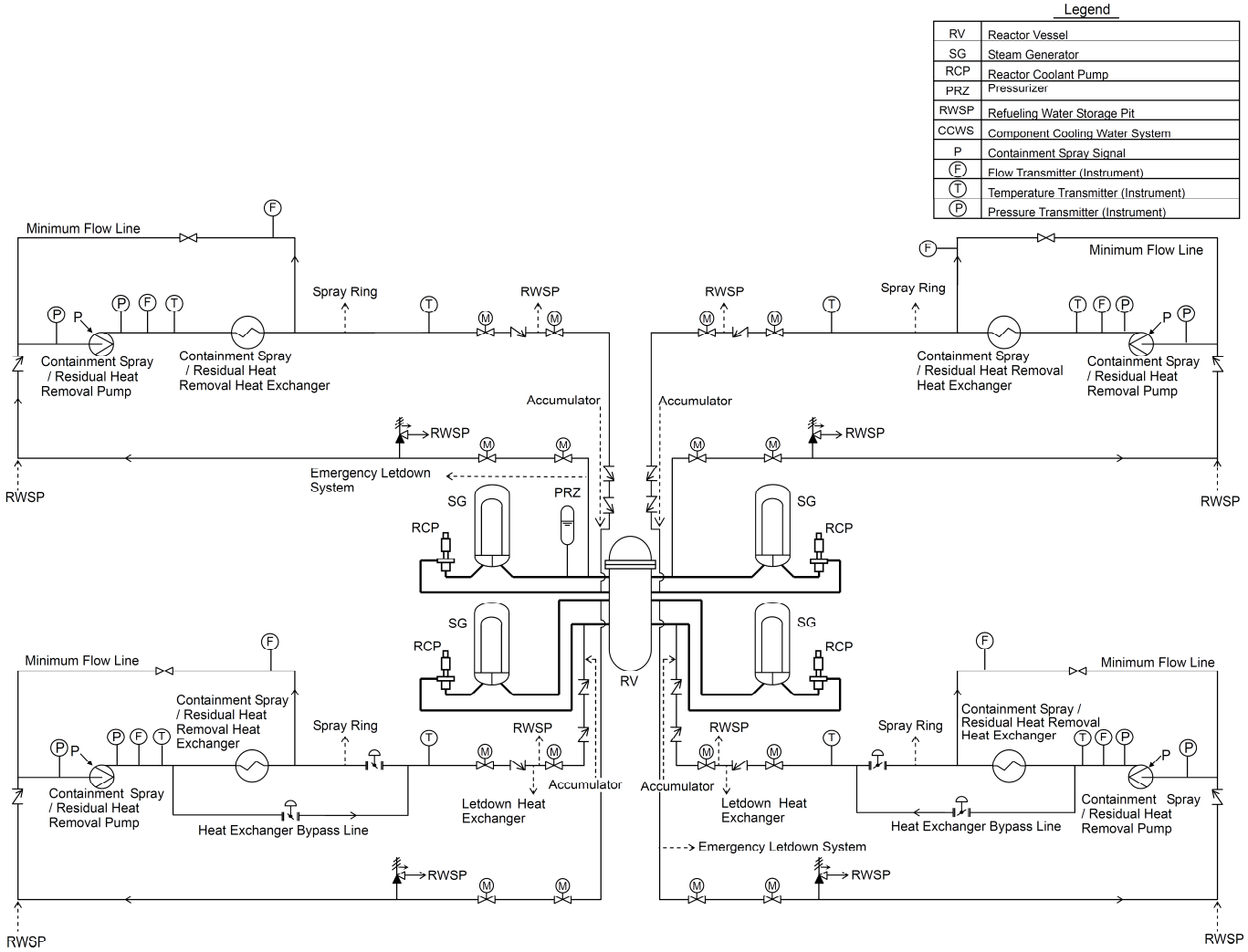

Figure 5.4.7-1 Residual Heat Removal System Flow Diagram

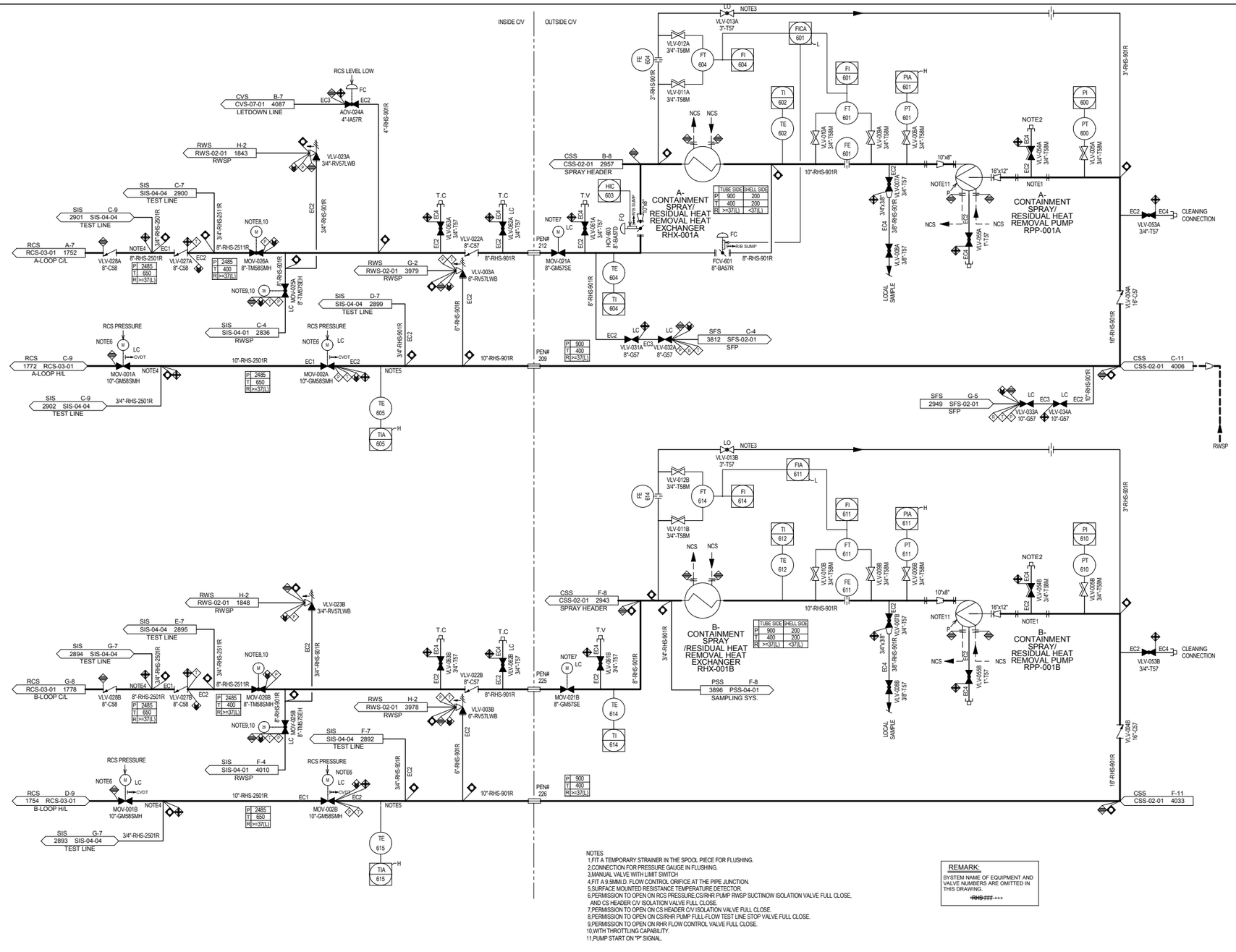

Figure 5.4.7-2 Residual Heat Removal System P&ID (Sheet 1 of 2)

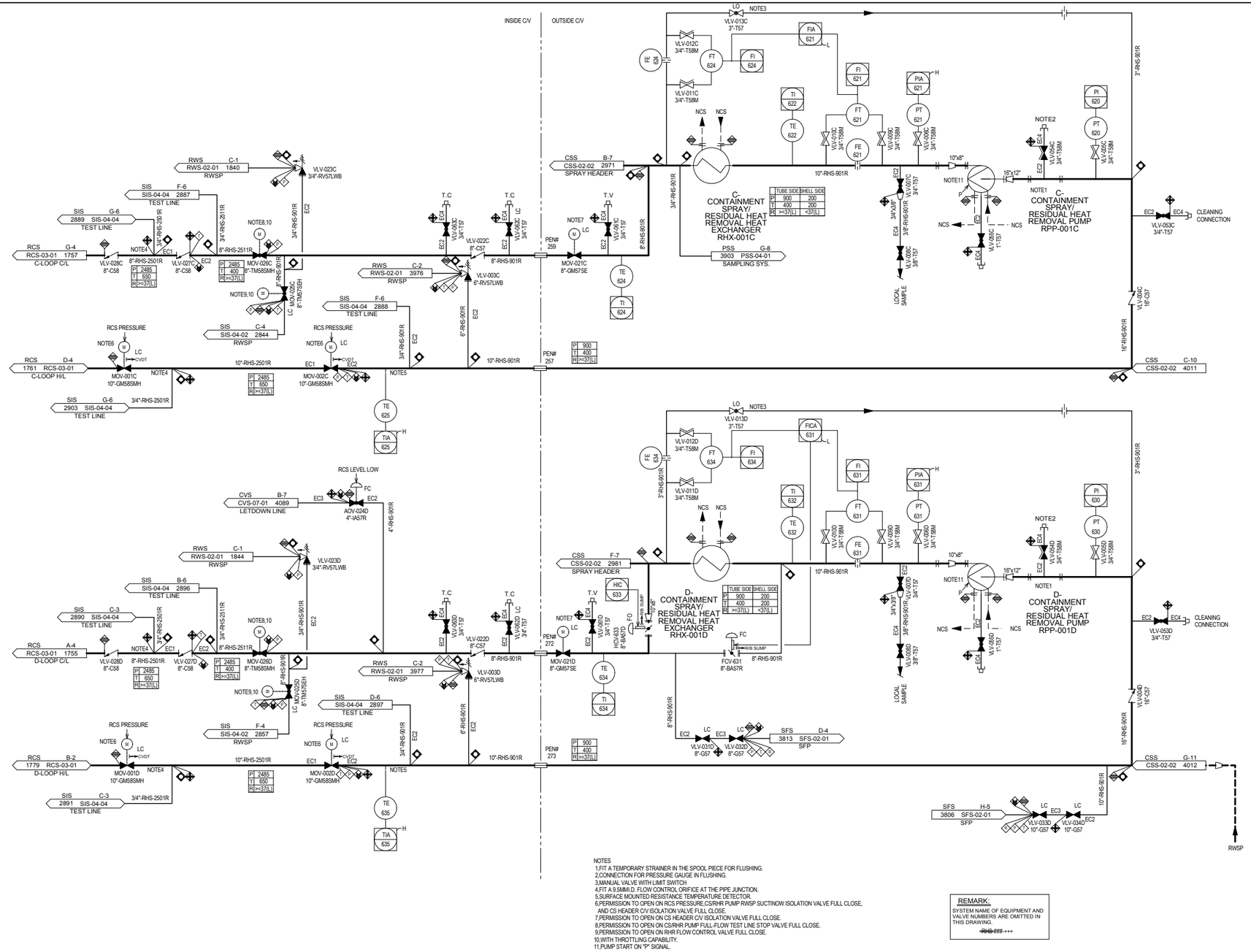

NOTES
1.FIT A TEMPORARY STRAINER IN THE SPOOL PIECE FOR FLUSHING.
2.CONNECTION FOR PRESSURE GAUGE IN FLUSHING.
3.MANUAL VALVE WITH LIMIT SWITCH
4.FIT A 9.5MMI.D. FLOW CONTROL ORIFICE AT THE PIPE JUNCTION.
5.SURFACE MOUNTED RESISTANCE TEMPERATURE DETECTOR.
6.PERMISSION TO OPEN ON RCS PRESSURE,CS/RHR PUMP RWSP SUCTINOW ISOLATION VALVE FULL CLOSE,
AND CS HEADER C/V ISOLATION VALVE FULL CLOSE.
7.PERMISSION TO OPEN ON CS HEADER C/V ISOLATION VALVE FULL CLOSE.
8.PERMISSION TO OPEN ON CS/RHR PUMP FULL-FLOW TEST LINE STOP VALVE FULL CLOSE.
9.PERMISSION TO OPEN ON RHR FLOW CONTROL VALVE FULL CLOSE.
10.WITH THROTTLING CAPABILITY.
11.PUMP START ON "P" SIGNAL.

REMARK:
SYSTEM NAME OF EQUIPMENT AND VALVE NUMBERS ARE OMITTED IN THIS DRAWING.
-RHS-### +++

Figure 5.4.7-2 Residual Heat Removal System P&ID (Sheet 2 of 2)

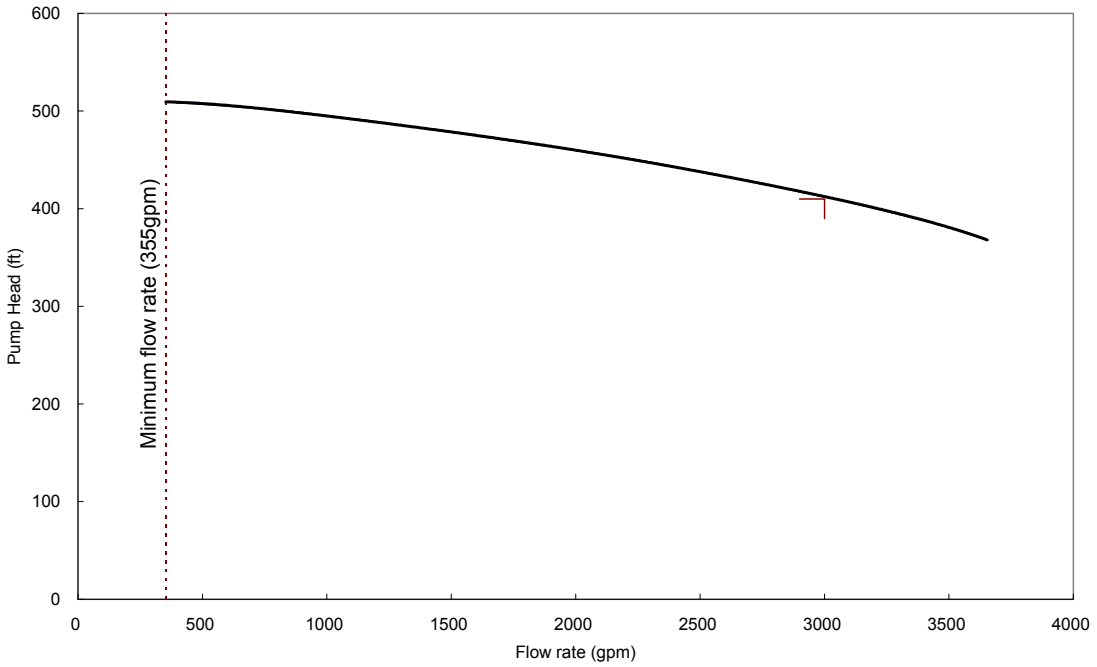

Figure 5.4.7-3 CS/RHR Pump Characteristic Curve

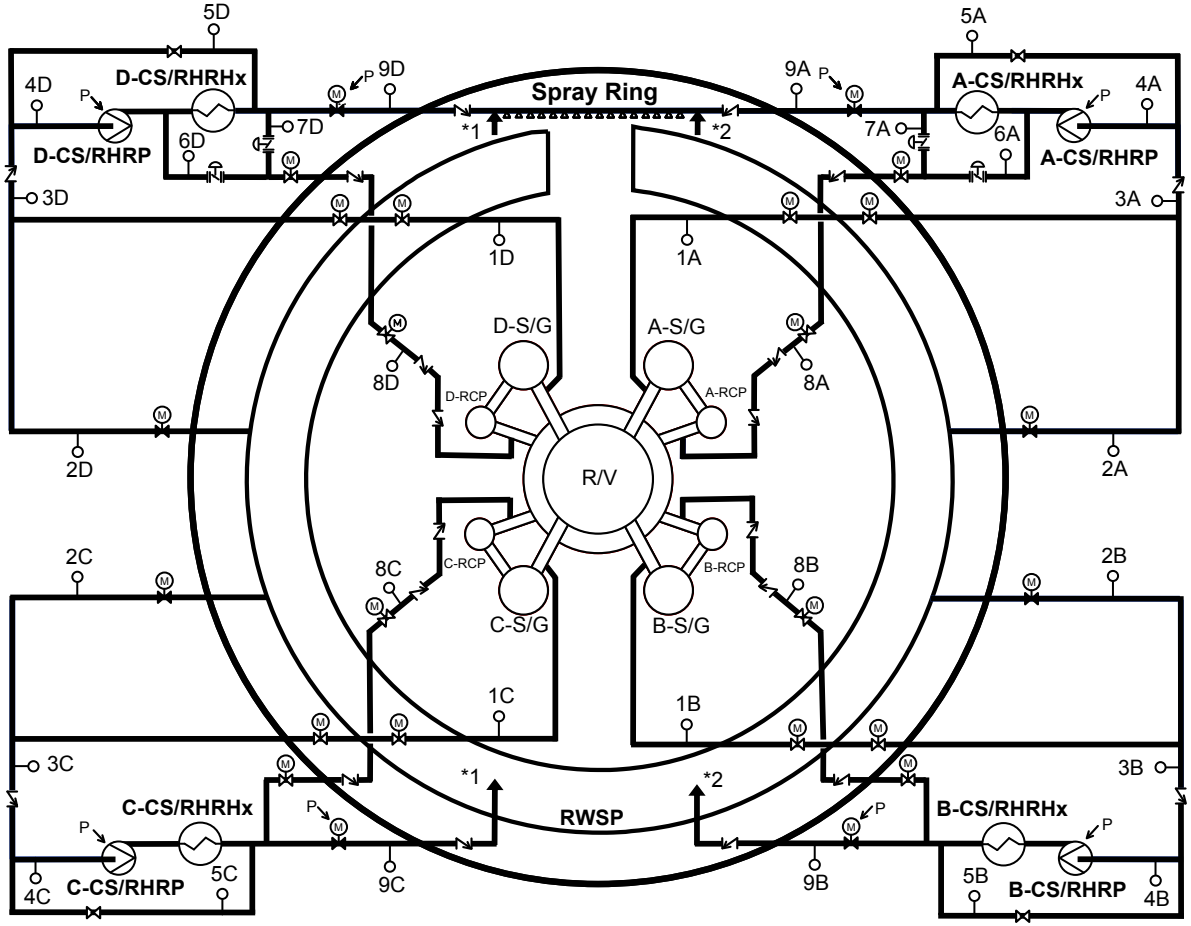

Legend

CS/RHRP	Containment Spray/Residual Heat Removal Pump
CS/RHRHx	Containment Spray/Residual Heat Removal Heat Exchanger
RWSP	Refueling Water Storage Pit
R/V	Reactor Vessel
RCP	Reactor Coolant Pump
S/G	Steam Generator
P	Containment Spray Signal

Location	1A	2A	3A	4A	5A	6A	7A	8A	9A	1B	2B	3B	4B	5B	-	-	8B	9B
Pressure (psig)	400	400	400	400	578	578	578	400	-	400	400	400	400	578	-	-	400	-
Temperature (deg F)	~350	~350	~350	~350	~350	~350	~350	~350	-	~350	~350	~350	~350	~350	-	-	~350	-
Flow Rate (gpm)	2645	0	2645	3000	355	0	2645	2645	0	2645	0	2645	3000	355	-	-	2645	0
Location	1C	2C	3C	4C	5C	-	-	8C	9C	1D	2D	3D	4D	5D	6D	7D	8D	9D
Pressure (psig)	400	400	400	400	578	-	-	400	-	400	400	400	400	578	578	578	400	-
Temperature (deg F)	~350	~350	~350	~350	~350	-	-	~350	-	~350	~350	~350	~350	~350	~350	~350	~350	-
Flow Rate (gpm)	2645	0	2645	3000	355	-	-	2645	0	2645	0	2645	3000	355	0	2645	2645	0

Figure 5.4.7-4 Residual Heat Removal System Mode Diagram (Sheet 1 of 4) Normal Shutdown

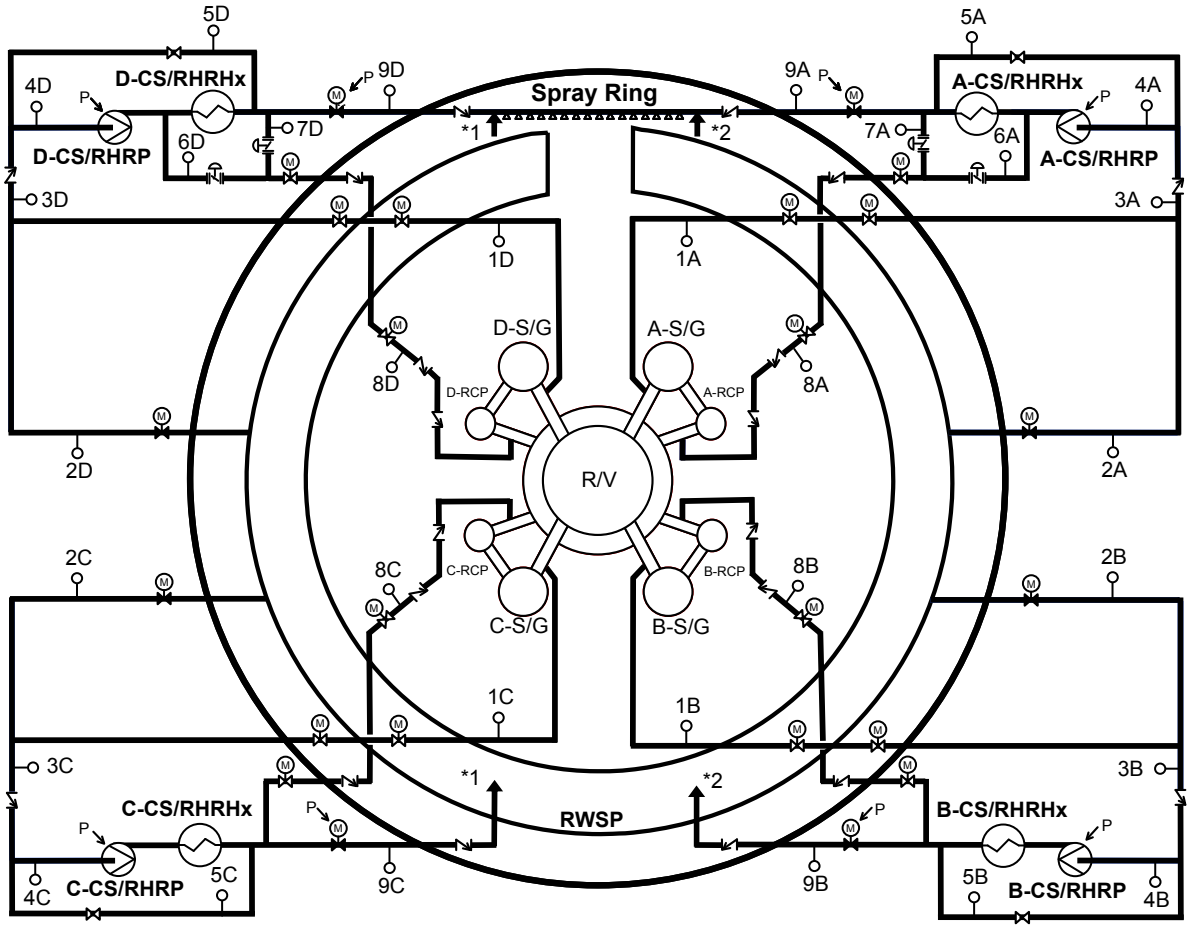

Legend

CS/RHRP	Containment Spray/Residual Heat Removal Pump
CS/RHRHx	Containment Spray/Residual Heat Removal Heat Exchanger
RWSP	Refueling Water Storage Pit
R/V	Reactor Vessel
RCP	Reactor Coolant Pump
S/G	Steam Generator
P	Containment Spray Signal

Location	1A	2A	3A	4A	5A	6A	7A	8A	9A	1B	2B	3B	4B	5B	-	-	8B	9B
Pressure (psig)	400	400	400	400	578	578	578	400	-	400	400	400	400	578	-	-	400	-
Temperature (deg F)	~350	~350	~350	~350	~350	~350	~350	~350	-	~350	~350	~350	~350	~350	-	-	~350	-
Flow Rate (gpm)	2645	0	2645	3000	355	0	2645	2645	0	2645	0	2645	3000	355	-	-	2645	0
Location	1C	2C	3C	4C	5C	-	-	8C	9C	1D	2D	3D	4D	5D	6D	7D	8D	9D
Pressure (psig)	400	400	400	400	578	-	-	400	-	400	400	400	400	578	578	578	400	-
Temperature (deg F)	~350	~350	~350	~350	~350	-	-	~350	-	~350	~350	~350	~350	~350	~350	~350	~350	-
Flow Rate (gpm)	2645	0	2645	3000	355	-	-	2645	0	2645	0	2645	3000	355	0	2645	2645	0

Figure 5.4.7-4 Residual Heat Removal System Mode Diagram (Sheet 2 of 4) Safe shutdown

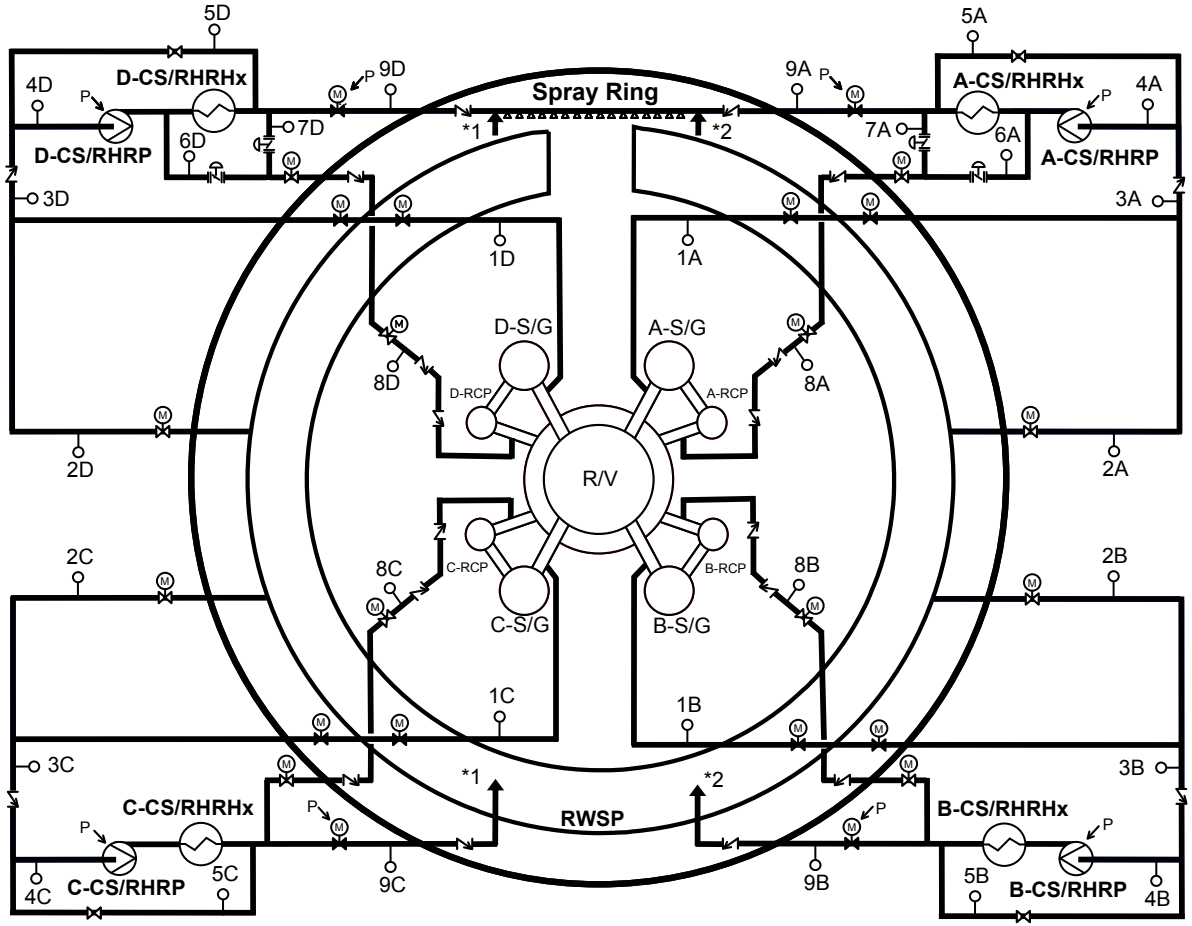

Legend

CS/RHRP	Containment Spray/Residual Heat Removal Pump
CS/RHRHx	Containment Spray/Residual Heat Removal Heat Exchanger
RWSP	Refueling Water Storage Pit
R/V	Reactor Vessel
RCP	Reactor Coolant Pump
S/G	Steam Generator
P	Containment Spray Signal

Location	1A	2A	3A	4A	5A	6A	7A	8A	9A	1B	2B	3B	4B	5B	-	-	8B	9B
Pressure (psig)	-	0	0	0	178	178	178	0	-	-	0	0	0	178	-	-	0	-
Temperature (deg F)	-	120	120	120	120	-	120	120	-	-	120	120	120	120	-	-	120	-
Flow Rate (gpm)	0	2645	2645	3000	355	0	2645	2645	0	0	2645	2645	3000	355	-	-	2645	0
Location	1C	2C	3C	4C	5C	-	-	8C	9C	1D	2D	3D	4D	5D	6D	7D	8D	9D
Pressure (psig)	-	0	0	0	178	-	-	0	-	-	0	0	0	178	178	178	0	-
Temperature (deg F)	-	120	120	120	120	-	-	120	-	-	120	120	120	120	-	120	120	-
Flow Rate (gpm)	0	2645	2645	3000	355	-	-	2645	0	0	2645	2645	3000	355	0	2645	2645	2645

Figure 5.4.7-4 Residual Heat Removal System Mode Diagram (Sheet 3 of 4) Refueling

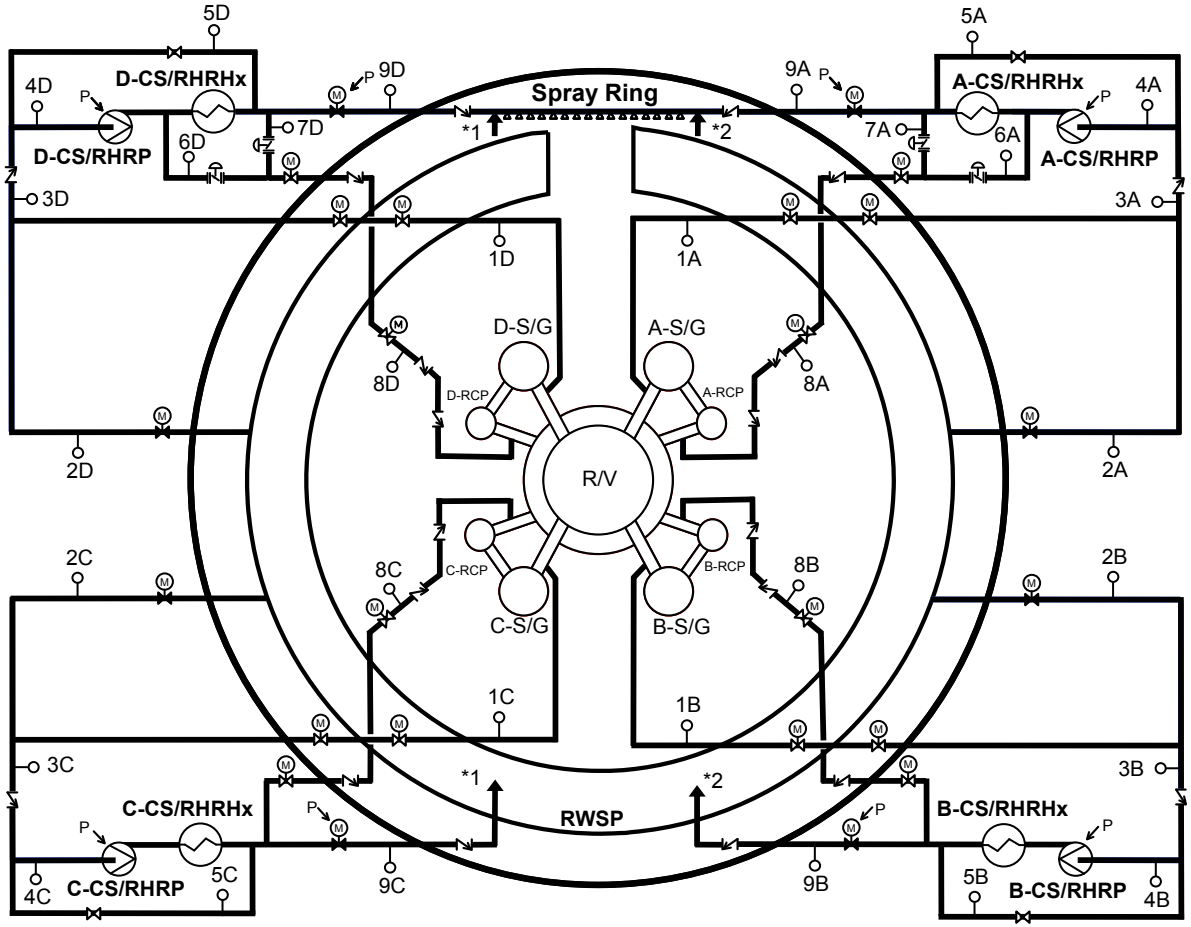

Legend

CS/RHRP	Containment Spray/Residual Heat Removal Pump
CS/RHRHx	Containment Spray/Residual Heat Removal Heat Exchanger
RWSP	Refueling Water Storage Pit
R/V	Reactor Vessel
RCP	Reactor Coolant Pump
S/G	Steam Generator
P	Containment Spray Signal

Location	1A	2A	3A	4A	5A	6A	7A	8A	9A	1B	2B	3B	4B	5B	-	-	8B	9B
Pressure (psig)	400	400	400	400	578	578	578	400	-	400	400	400	400	578	-	-	400	-
Temperature (deg F)	~350	~350	~350	~350	~350	~350	~350	~350	-	~350	~350	~350	~350	~350	-	-	~350	-
Flow Rate (gpm)	2645	0	2645	3000	355	0	2645	2645	0	2645	0	2645	3000	355	-	-	2645	0
Location	1C	2C	3C	4C	5C	-	-	8C	9C	1D	2D	3D	4D	5D	6D	7D	8D	9D
Pressure (psig)	400	400	400	400	578	-	-	400	-	400	400	400	400	578	578	578	400	-
Temperature (deg F)	~350	~350	~350	~350	~350	-	-	~350	-	~350	~350	~350	~350	~350	~350	~350	~350	-
Flow Rate (gpm)	2645	0	2645	3000	355	-	-	2645	0	2645	0	2645	3000	355	0	2645	2645	0

Figure 5.4.7-4 Residual Heat Removal System Mode Diagram (Sheet 4 of 4) Startup

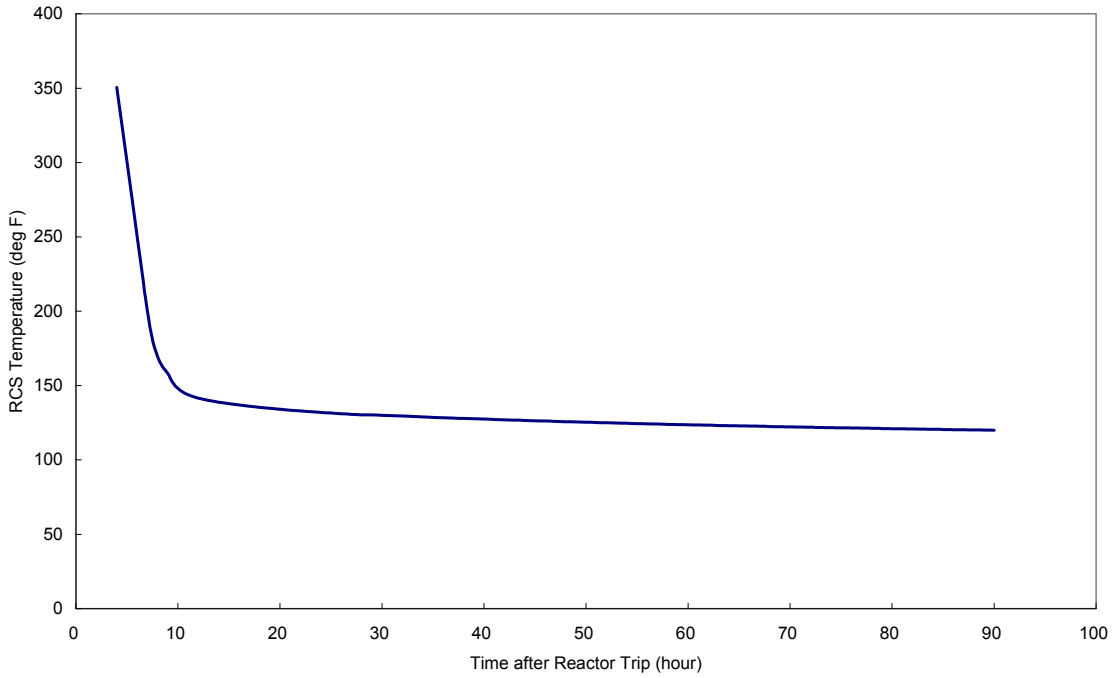

Figure 5.4.7-5 RCS Temperature Transient Curve (Normal Shutdown)

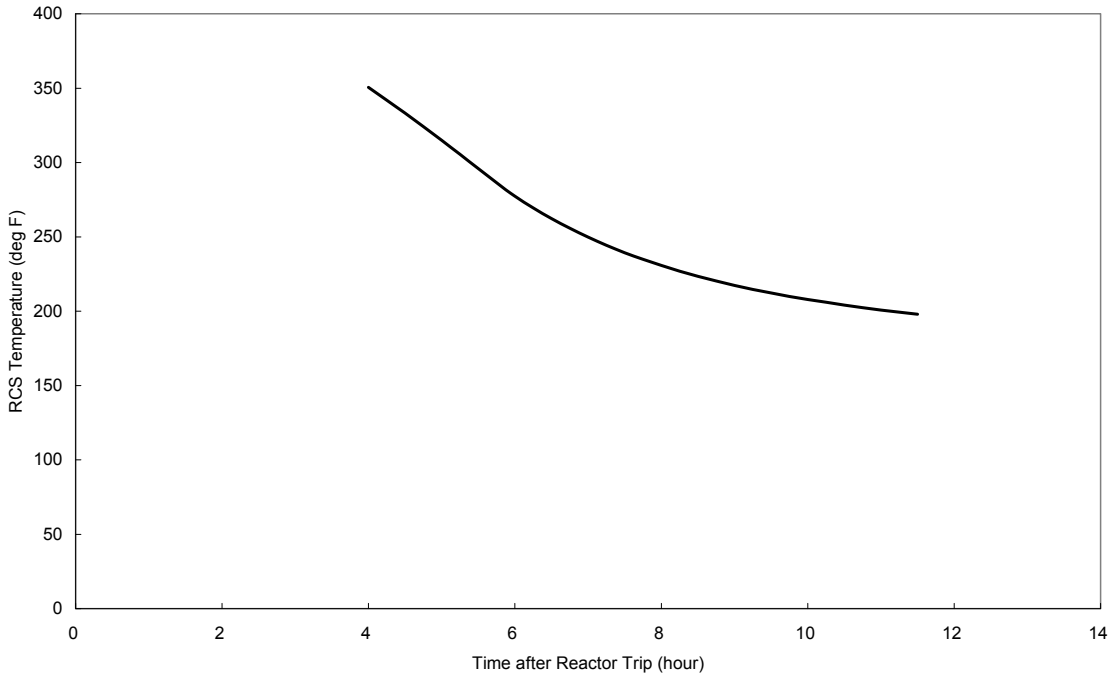

Figure 5.4.7-6 RCS Temperature Transient Curve (Safe Shutdown)

5.4.8 Reactor Water Cleanup System

This section is for BWRs only as per RG 1.206 and not applicable to US-APWR.

5.4.9 Reserved by NRC as per RG 1.206

This section is reserved by NRC as per RG 1.206.

5.4.10 Pressurizer

The pressurizer provides a point in the RCS where liquid and vapor are maintained in equilibrium under saturated conditions for pressure control of the RCS during steady-state operations and transients.

The pressurizer surge line connects the pressurizer to one reactor coolant hot leg. This allows continuous coolant volume and pressure adjustments between the RCS and the pressurizer.

5.4.10.1 Design Bases

The pressurizer is sized to meet following requirements:

- The combined saturated water volume and steam expansion volume is sufficient to provide the desired pressure response to system volume changes.
- The water volume is sufficient to prevent uncovering of the heaters following reactor trip and turbine trip.
- The steam volume is large enough to accommodate the surge resulting from a step load reduction of 100% of full power without reactor trip, assuming automatic reactor control.
- The steam volume is large enough to prevent water relief through the safety valves following a feedwater line rupture.
- ECCS actuation signal on the low pressurizer pressure will not be activated as a result of a reactor trip and turbine trip.

The pressurizer is sized to have sufficient volume to accomplish the preceding requirements without the need of power-operated relief valves. The safety valves provide overpressure protection for the RCS.

The pressurizer surge nozzle and the surge line between the pressurizer and one hot leg are sized to maintain the pressure drop between the RCS and the safety valves within allowable limits during a design discharge flow from the safety valves.

Section 3.2 discusses the US-APWR equipment classification, seismic category and ASME Code classification of the pressurizer. ASME Code and Code Case compliance is discussed in Subsection 5.2.1.

The design stress limits, loads, and combined loading conditions are discussed in Subsection 3.9.3.

Design transients for the components of the pressurizer are discussed in Subsection 3.9.1. The pressurizer surge nozzle and surge line are designed to withstand the thermal stresses resulting from volume surges occurring during operation.

The pressurizer is designed in accordance with the requirements of GDC 2 and GDC 4 (Ref. 5.4-8).

5.4.10.2 System Description

5.4.10.2.1 Pressurizer

The pressurizer is a vertical, cylindrical vessel having hemispherical top and bottom heads. It is constructed of low-alloy steel and clad with austenitic stainless steel on the internal surfaces in contact with the reactor coolant. The pressurizer pressure boundary materials are described in Subsection 5.2.3. The pressurizer material specifications are shown in Table 5.2.3-1.

The pressurizer configuration is shown in Figure 5.4.10-1. The pressurizer design data are provided in Table 5.4.10-1. Codes and material requirements are provided in Section 5.2.

The safety valve nozzles, spray nozzle and safety depressurization valve nozzle are located at the top head. Spray flow is modulated by automatically controlled air-operated valves. The spray valves can also be operated manually from the main control room. The surge nozzle is located at the bottom head. Both the spray and surge nozzles are provided with thermal sleeves for protection against thermal transients.

The surge nozzle located at the bottom head is provided with a surge screen mounted above the nozzle to prevent ingress of foreign objects from the pressurizer to the RCS. To restrict direct in-surge flow of cold water to the steam/water interface and for mixing purposes, guide plate(s) are provided above the surge nozzle. The guide plate(s) also serves as heater supports.

Electric immersion heaters are vertically installed through the bottom head. The heater sheath is welded on a heater sleeve end protruding externally from the bottom head. The heater sleeve is welded at the inner surface of the bottom head as a pressure retaining part.

The heaters are grouped into a control group and backup groups. The heaters in the control group are proportional heaters which are supplied with continuously variable power to match heating needs. The heaters in the backup group are either off or at full power. The power supply to the heaters is a 480-volt 60 Hz three-phase circuit. Each heater is connected to one leg of a delta-connected circuit and is rated at 480 volts with one-phase current. The capacity of the control and backup groups is defined in Table 5.4.10-2.

A spray head mounted internally below the spray nozzle can be accessed through the manway provided at the top head for maintenance. The manway cover is provided with a gasket and secured with threaded fasteners.

The support skirt is welded to the lower head that covers the circumference of the vessel. A flange is welded to the lower part of the skirt with bolt holes for securing the foundation.

5.4.10.2.2 Instrumentation

Instrument nozzles are provided in the pressurizer shell to measure important parameters.

Eight water level nozzles are provided for four channels of water level measurement. Water level nozzles are also used for connection to the pressure measurement instrumentation. Two temperature nozzles monitor water/steam temperature. A sample nozzle is provided for connection to the sampling system to monitor coolant chemistry. The instrument and sample nozzles are constructed of stainless steel and are welded to the connecting lines. The sample and lower water level nozzles incorporate an integral flow restrictor with a diameter of 0.375 inch or smaller.

Refer to Chapter 7 for details of the instrumentation associated with pressurizer pressure, water level.

5.4.10.2.3 Operation

During steady-state operation at 100% power, approximately 45% of the pressurizer volume is water and approximately 55% is steam. Electric immersion heaters in the bottom of the vessel keep the water at saturation temperature. The heaters also maintain a constant operating pressure.

A small continuous spray flow is provided through a manual bypass valve around each air-operated spray valve to prevent thermal shock of the spray piping. Proportional heaters in the control group are continuously on during normal operation to compensate for the continuous introduction of cooler spray water and for heat losses.

During an out-surge of water from the pressurizer, flashing of water to steam and generation of steam by automatic actuation of the heaters keep the pressure above the low-pressure reactor trip setpoint. During an in-surge from the RCS, the spray system (which is fed from two cold legs) condenses steam in the pressurizer. This prevents the pressurizer pressure from reaching the high-pressure reactor trip setpoint. The heaters are energized on high water level during in-surge to heat the sub-cooled surge water entering the pressurizer from the reactor coolant hot leg.

The pressurizer is the initial source of water to keep the RCS full of water in the event of a small loss of coolant. Pressurizer water level and pressure measurements indicate if other sources of water, including the chemical volume and control system, must be used to supply additional reactor coolant.

5.4.10.3 Performance Evaluation

5.4.10.3.1 System Pressure Control

The RCS pressure is controlled by the pressurizer whenever a steam volume is present in the pressurizer.

A design basis safety limit has been set so that the RCS pressure does not exceed the maximum transient value based on the design pressure as allowed under the ASME Code, Section III. Evaluation of plant conditions of operation considered for design indicates that this safety limit is not reached. The safety valves provide overpressure protection as described in Subsection 5.2.2.

During startup and shutdown, the rate of temperature change in the RCS is controlled by the turbine bypass valves. The heat up rate is controlled by energy input from the RCPs and by modulation of the turbine bypass valves. The pressurizer heat-up rate is controlled by the electrical heaters in the pressurizer.

During initial system heat-up or near the end of the second phase of plant cool-down, RCS pressure is controlled by the letdown flow rate.

The pressurizer heaters are powered from the 480 V ac system. During loss of offsite power concurrent with a turbine trip, selected backup heaters powered from the onsite emergency power sources are capable of being manually energized. This permits use of the pressurizer for pressure control purposes during loss of offsite power. The power supplied by the emergency power sources is sufficient to establish and maintain natural circulation in hot standby condition in conformance with the requirement of 10CFR50.34 (f)(2)(xiii) (Ref. 5.4-2).

If loss of offsite power occurs and onsite power is available, the pressurizer heaters and emergency feedwater pumps can operate to provide natural circulation and cooling through the SGs.

5.4.10.3.2 Pressurizer Water Level Control

The normal operating water volume at full-load conditions is approximately 45% of the free internal vessel volume. With the reduction in plant load, the water volume in the pressurizer is reduced proportionally to approximately 20% of the free internal vessel volume at the zero-power condition.

5.4.10.3.3 Pressure Setpoints

The RCS design and operating pressure, safety valve setpoints, heater actuation setpoints, pressurizer spray valve setpoints, and protection system pressure setpoints, are listed in Table 5.4.10-3.

The selected design margin considers core thermal lag, coolant transport times and pressure drops, instrumentation and control response characteristics. The design pressure margin allows for operating transient pressure changes.

ECCS actuation signal on the low pressurizer pressure does not require a coincident low pressurizer water level signal.

5.4.10.3.4 Pressurizer Spray

Two separate, automatically controlled spray valves with remote manual overrides are used to initiate pressurizer spray.

A manual bypass valve is provided in parallel with each spray valve. The bypass valve permits a small, continuous flow through both spray lines to reduce thermal stresses and thermal shock when the spray valves open. Flow through this valve helps to maintain uniform water chemistry and temperature in the pressurizer. Temperature sensors with low temperature alarms are located in each spray line to alert the operator of insufficient bypass flow.

The layout of the common spray line piping routed to the pressurizer forms a water seal that prevents steam buildup back to the spray valves. The design spray flow rate is selected to prevent the pressurizer pressure from reaching the reactor trip set point during a step reduction of 100% of full load.

The pressurizer spray lines and valves are sized to provide the required spray flow rate (total 800 gpm) under the driving force of the differential pressure between the surge line connection in the hot leg and the spray line connection in the cold leg. The spray line inlet connections extend into the cold leg piping in the form of a scoop in order to use the velocity head of the reactor coolant loop flow to add to the spray driving force. The spray line also assists in equalizing the boron concentration between the reactor coolant loops and the pressurizer.

A flow path from the CVCS to the pressurizer spray line is also provided. This path can provide auxiliary spray to the pressurizer during cool-down when the RCPs are not operating. The pressurizer spray nozzle and the spray piping can withstand the thermal stresses resulting from the introduction of cooler spray water.

5.4.10.4 Tests and Inspections

The design and construction of the pressurizer is made to comply with the ASME Code, Section III. The pressurizer is designed to allow inspections as stipulated by ASME Code, Section XI. Table 5.4.10-4 and 5.4.10-5 summarizes the tests and inspections of the pressurizer materials and weld joints respectively.

In order to satisfy the ASME Code, Section XI requirements, the welds listed below are designed to have a plane transition between the parent and weld metals.

The following weld surfaces are smoothened for volumetric inspection (UT):

- Support skirt to the Bottom head.
- Surge nozzle to the Bottom head.

- Manway, spray nozzle, safety valve nozzles, and safety depressurization valve nozzles to the top head.
- Nozzle to safe end welds.
- Circumferential full-penetration welds.

For the spray and surge nozzles, the thermal sleeve weld at the safe end is located at a sufficient distance from the safe end and nozzle weld area for consistency of the weld pattern for UT inspections.

Removable insulations are provided for inspection purposes.

Table 5.4.10-1 Pressurizer Design Data

Number	1
Design pressure (psig)	2,485
Design temperature (°F)	680
Surge nozzle nominal diameter (in.)	16
Spray nozzle nominal diameter (in.)	6
Safety valve nozzle nominal diameter (in.)	6
Safety depressurization valve nozzle nominal diameter (in.)	8
Total volume (ft^3)	2,900
Total Spray flow rate (gpm)	800

Table 5.4.10-2 Pressurizer Heater Group Parameters

Voltage (V)	480
Frequency (Hz)	60
Power Capacity	
Control Group (kW)	702
Backup Group A (kW)	562
Backup Group B (kW)	562
Backup Group C (kW)	562
Backup Group D (kW)	562

Table 5.4.10-3 Reactor Coolant System Design Pressure Settings

Hydrostatic test pressure (psig)	3,106
Design pressure (psig)	2,485
Safety valves (psig)	2,485
High pressure reactor trip (psig)	2,385
Pressurizer spray valves (full open) (psig)	2,310
Pressurizer spray valves (begin to open) (psig)	2,260
Proportional heaters (begin to operate) (psig)	2,250
Operating pressure (psig)	2,235
Proportional heater (full operation) (psig)	2,220
Backup heaters on (psig)	2,210
Low pressure reactor trip (psig)	1,865

Table 5.4.10-4 Tests and Inspections of the Pressurizer Materials

Parts	RT[(a)]	UT[(a)]	PT[(a)]	MT[(a)]
Top & Bottom Heads	–	Yes	–	Yes[(b)]
Shells	–	Yes	–	Yes[(b)]
Nozzle/Manway forgings	–	Yes	–	Yes[(b)]
Nozzle Safe ends	–	Yes	Yes	–
Manway cover	–	Yes	–	–
Manway Studs/Nuts	–	Yes	–	Yes[(b)]
Heater Sleeve	–	Yes	Yes	–
Instrument Nozzles	–	Yes	Yes	–
Heater Sheath	–	Yes	–	–

Notes:

(a) RT – Radiographic Examination, UT – Ultrasonic Examination
PT – Liquid Penetrant Examination, MT – Magnetic Particle Examination

(b) PT is an alternative in case MT is not possible.

Table 5.4.10-5 Tests and Inspections of the Pressurizer Weld Joints

Weldments	RT[a]	UT[a]	PT[a]	MT[a]
Shell to Shell, Circumferential	Yes	Yes[c]	–	Yes [d]
Shell to Shell, Longitudinal	Yes	Yes[c]	–	Yes [d]
Shell to Head	Yes	Yes[c]	–	Yes [d]
Shell & Head Cladding	–	–	Yes	–
Nozzle Cladding	–	–	Yes	Yes[d]
Joint Weld Cladding	–	–	Yes	Yes[d]
Nozzles/Manway to Head	Yes	Yes[c]	–	Yes[d]
Nozzle Buttering	–	Yes[c]	Yes	Yes[d]
Nozzle to safe end	Yes	Yes[c]	Yes [d]	–
Heater Sleeve to Head	–	–	Yes [d] [e]	–
Heater Sleeve to Sheath	–	–	Yes [d] [e]	–
Instrument Nozzles to Shell	–	–	Yes [d] [e]	–

Notes:

(a) RT – Radiographic Examination, UT – Ultrasonic Examination
PT – Liquid Penetrant Examination, MT – Magnetic Particle Examination

(b) PT is an alternative in case MT is not possible.

(c) MHI optional tests for preliminary Pre-Service Inspection

(d) For edge preparation surfaces

(e) For every half of the deposited weld dimension(1/2T)

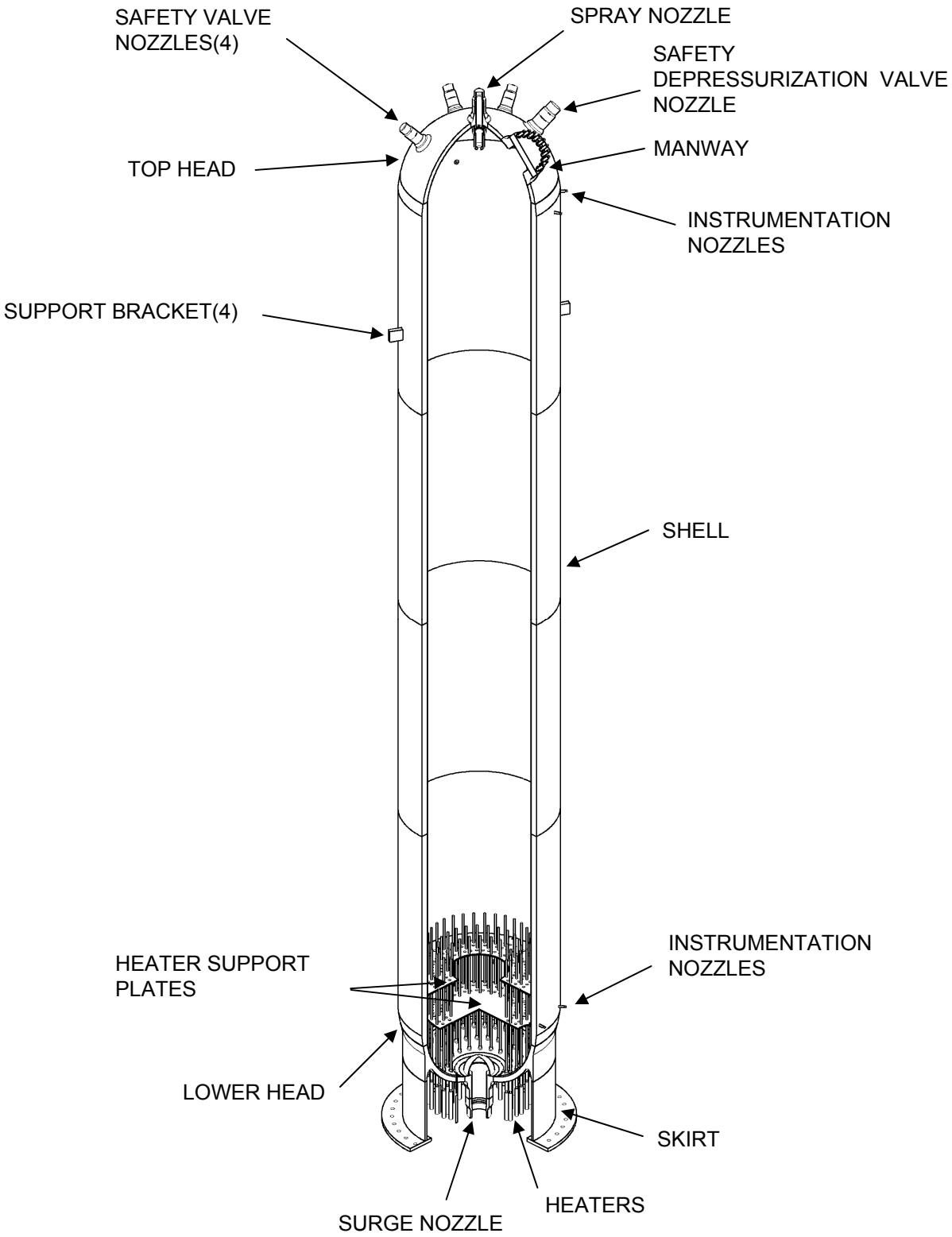

Figure 5.4.10-1 Pressurizer

5.4.11 Pressurizer Relief Tank

5.4.11.1 Design Bases

The pressurizer relief tank system collects and cools the steam and water discharged from various safety and relief valves in the containment. The system consists of the pressurizer relief tank (PRT), the discharge piping connected to the PRT, the PRT internal spray header, and associated piping, as illustrated in Figure 5.1-2.

The system design, including the PRT design volume, is based on the requirement to condense and cool a discharge of steam equivalent to 100% of the full-power pressurizer steam volume. Design data for the PRT is given in Table 5.4.11-1.

The minimum volume of water in the PRT is determined by the energy content of the steam to be condensed and cooled, the assumed initial temperature of the water, and by the desired final temperature of the water. The initial water temperature is assumed to be 120°F, which corresponds to the design maximum expected containment temperature for normal conditions. If the PRT water temperature rises above 120° F during plant operation, cooler water from the Primary Makeup Water System feeds into the PRT to reduce water temperature while draining some of the PRT water using the C/V reactor coolant drain pump. The expected final temperature, following a design discharge to the PRT, is 210° F.

Section 3.2 discusses the US-APWR equipment classification, seismic category and ASME Code classification. The PRT and the discharge piping connected to PRT is designed to be in compliance with Regulatory Guide 1.29, and designed not to adversely affect the performance of safety related structure, system, and component (SSC).

As discussed in Subsection 3.9.3, the discharge piping and support arrangement is designed considering the effect of thrust forces on the piping system from valve operations.

The design and location of the PRT rupture disks are such that they do not pose a missile threat to any safety-related equipment.

5.4.11.2 System Description

The steam and reactor grade water discharged from the various safety and relief valves inside containment are routed to the PRT. Table 5.4.11-2 provides an itemized list of the discharges to the PRT.

The PRT, shown in Figure 5.4.11-1, is a horizontal, cylindrical vessel with elliptical dished heads. The PRT is the stainless steel tank and is protected from the overpressure by means of rupture disks.

The discharge piping connected to PRT is also constructed of austenitic stainless steel.

The flanged connection for the discharge line, the spray water supply connection, the drain connection, the gas vent connection, the nitrogen gas supply connection, and the vessel supports are shown in Figure 5.4.11-1.

The PRT normally contains water in a predominantly nitrogen atmosphere. For the effective condensing and cooling of the discharged steam, the steam is discharged through a sparger pipe located near the bottom, under the water level.

A nitrogen gas blanket is used to control the atmosphere in the PRT and to allow room for the expansion of the initial water volume. The PRT gas volume is sized such that the pressure following a design basis steam discharge does not exceed the rupture disks release pressure. Gas in the PRT is periodically analyzed to determine the concentration of hydrogen and/or oxygen.

The internal spray and bottom drain of the PRT function to cool the water when the temperature exceeds 120°F. The contents are cooled by a feed-and-bleed process, with cold primary makeup water entering the PRT through the spray water inlet and the warm mixture draining by the C/V reactor coolant drain pump.

5.4.11.3 Performance Evaluation

The pressurizer relief tank system does not constitute part of the RCPB in accordance with 10CFR50.2 (Ref. 5.4-1). Thus, GDC 14 and 15 (Ref. 5.4-8) are not applicable. In addition, any failure of the auxiliary systems serving the PRT will not compromise the capability for safe shutdown. Therefore, a failure mode effect analysis is not necessary.

The pressurizer relief tank system is capable of handling the design discharge of steam without exceeding the PRT design pressure and temperature. The volume of water in the PRT is capable of absorbing the heat from the assumed discharge while maintaining the water temperature below 210°F. The volume of nitrogen in the PRT is that required to limit the maximum pressure after receiving the design basis discharge to rupture disk release pressure.

If a discharge results in a pressure that exceeds the design pressure, the rupture disks on the PRT would open and discharge the PRT inventory to containment vessel. The rupture disks on the PRT have a relief capacity greater than or equal to the combined capacity of the pressurizer safety valves. The PRT and rupture disks are also designed for full vacuum to prevent PRT collapse, in the event that the contents are cooled following a discharge without nitrogen being added.

5.4.11.4 Instrumentation Requirements

The following instrumentation is provided in the main control room:

A. The PRT pressure indication and high pressure alarm are provided.

B. The PRT water level indication, high water level alarm and low water level alarm are provided.

C. The PRT temperature indication and high temperature alarm are provided.

Table 5.4.11-1 Pressurizer Relief Tank Design Data

Number	1
Design pressure (internal/external) (psig)	200/15
Design temperature (°F)	400
Material	Stainless steel
Total volume (ft^3)	2,760
Normal water volume (ft^3)	1,920
Normal operating pressure (psig)	3
Initial operating water temperature (°F)	120
Expected final operating water temperature (°F)	210
Blanket gas	Nitrogen

Table 5.4.11-2 Discharges to the Pressurizer Relief Tank

RCS
Pressurizer safety valves
Safety depressurization valves
Reactor vessel head vent valves
CVCS
Seal water return line relief valve
Letdown line relief valve

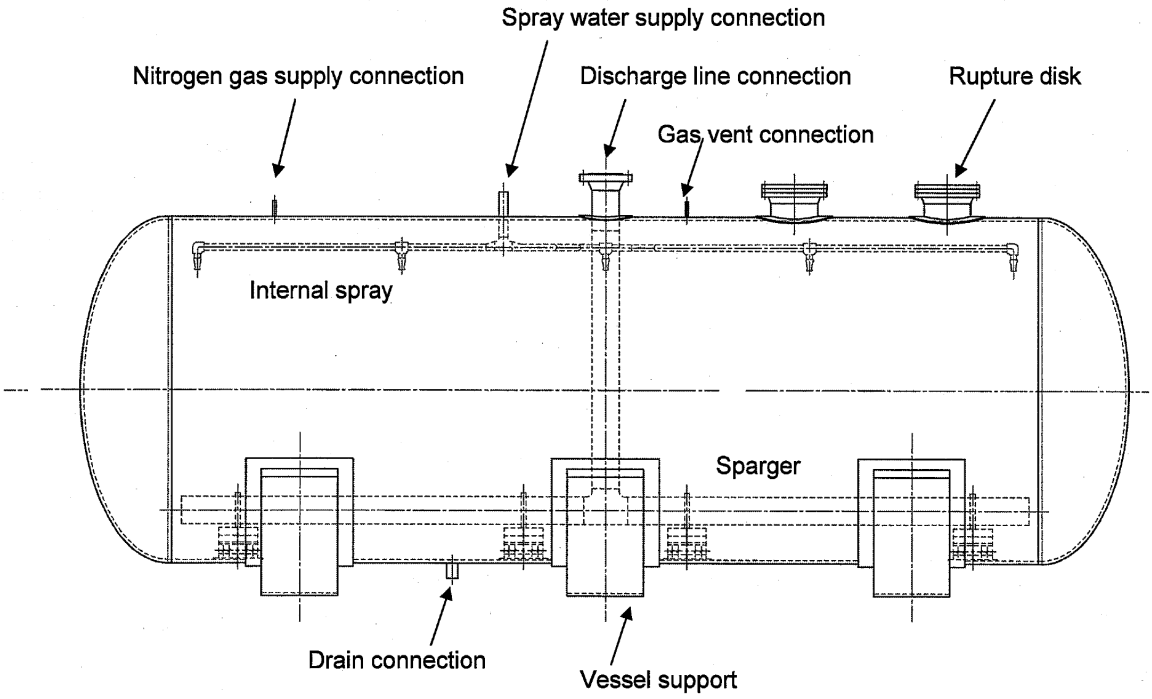

Figure 5.4.11-1 Pressurizer Relief Tank

5.4.12 Reactor Coolant System High Point Vents

The reactor vessel head vent, the safety depressurization valve (SDV), and the depressurization valve (DV) could be used for high point vents. The SDV and DV are connected to the pressurizer. The US-APWR does not require elimination of non-condensable gases for core cooling following design based accidents using high point vents. RCS piping and instrumentation diagram (Figure 5.1-2) shows the system arrangements.

5.4.12.1 Design Bases

The high point vents system is designed to provide the vent path which is used to enhance natural circulation of reactor coolant by eliminating non-condensable gases.

The high point vents system satisfies applicable requirements and industry standards, including ASME Code classifications, 10CFR 50.34(f) (2)(vi) (Ref. 5.4-2), 10CFR 50.44 (Ref. 5.4-3), 10CFR 50.46 (Ref. 5.4-4), 10CFR 50.46a (Ref. 5.4-5), 10CFR 50.49 (Ref. 5.4-6), 10CFR 50.55a (Ref. 5.4-7), safety classifications and environmental qualification.

The piping and equipment from the reactor vessel head vent up to and including the second vent valve, and from the pressurizer up to and including SDV and DV are designed and fabricated according to ASME Codes Section III, Class 1 requirements.

The Class 1 piping used for the reactor vessel head vent is 1-inch schedule 160 pipe. The piping analysis is following the procedures of NC-3600 for Class 2 piping in accordance with ASME Section III.

As discussed in Subsection 3.9.3, the discharge piping and support arrangement is designed considering the effect of thrust forces on the piping system from valve operations.

Vent areas should provide good mixing with containment air.

Venting does not adversely affect the performance of safety-related SSCs, and does not aggravate the challenge to containment or the course of an accident.

Pursuant to the quality assurance program discussed in Chapter 17, the high point vent system is designed.

5.4.12.2 System Design

(A) Reactor Vessel Head Vent

The reactor vessel head vent is used to enhance natural circulation of the reactor coolant by eliminating non-condensable gases in the upper plenum of the reactor vessel. The reactor vessel head vent design parameter is shown in Table 5.4.12-1.

The reactor vessel head vent arrangement consists of a flow path that diverges into two parallel paths each with two redundant 1-inch motor-operated remote manual valves

connected in series. A 1-inch vent pipe is located near the center of the reactor vessel head. The reactor vessel head vent discharge line is connected to PRT.

The valve arrangement of two normally closed valves in series in each flow path minimizes the possibility of inadvertent actuation. The motor-operated valves are controlled from the MCR. Open and closed indication of the valves is provided and monitored from MCR. Each valve connected in series is powered by the independent Class 1E power supply. And these valves could be also powered by alternate alternating current power supplies which are available under station blackout conditions. The valves are qualified to IEEE 344.

Information available to the operator for initiating and terminating system operation is as follows:

- Information available for initiating system operation: core damage
- Information available for terminating system operation: reactor vessel water level

“Core damage” is judged from dose rate in the containment and core exit temperature.

(B) Safety depressurization valve

The SDVs are used to cool the reactor core by feed and bleed operation when loss of heat removal from the SGs occurs. The SDVs are the motor-operated remote manual valves. SDV design parameter is shown in Table 5.4.12-2.

The SDVs arrangement consists of two flow paths with the motor-operated remote manual block valve located at the upstream of each SDV. The block valves are used in case the SDVs are stuck open or leak excessively. The SDVs and the block valves are controlled from MCR. Open and closed indication of the valves is provided and monitored from MCR. The SDVs and the block valves are respectively powered by the independent Class 1E power supply. And these valves could be also powered by alternate alternating current power supplies which are available under the station blackout condition. The valves are qualified to IEEE 344.

Information available to the operator for initiating and terminating the SDVs operation at severe accident is as follows:

- Information available for initiating system operation: SG secondary side water level (wide range)
- Information available for terminating system operation: SG secondary side water level (wide range)

(C) Depressurization valve

The DVs are used to prevent high pressure melt ejection (HPME) at vessel failure and temperature induced steam generator tube rupture (TI-SGTR) by depressurizing the reactor coolant system. The DVs design parameters are shown in Table 5.4.12-3.

The DVs arrangement consists of a flow path with two redundant motor-operated remote manual valves connected in series. Non-condensed gas or steam is directly discharged to the containment vessel.

The valve arrangement with two normally closed valves in series minimizes the possibility of inadvertent actuation. The motor-operated valves are controlled from MCR. Open and closed indication of the valves is provided and monitored from MCR. Each valve is respectively powered by the independent Class 1E power supply. And these valves could be also powered by alternate alternating current power supplies which are available under the station blackout conditions. The valves are qualified to IEEE 344.

Information available to the operator for initiating and terminating the DVs operation at severe accident is as follows:

- Information available for initiating system operation: progress of core damage and RCS pressure
- Information available for terminating system operation: RCS pressure

“Progress of core damage” is judged from the success and failure of both vessel head vent valves and reactor core coolant injection.

5.4.12.3 Performance Evaluation

(A) Reactor Vessel Head Vent

The reactor vessel head vent is designed so that a single failure of the remotely operated vent valves, power supply, or control system does not prevent isolation of the vent path. The two valves in the active flow path provide a redundant method of isolating the venting system. With two valves in series, the failure of any one valve does not inadvertently open a vent path or prevent isolation of a flow path.

The reactor vessel head vent system has two normally closed valves in series in each flow path. This arrangement eliminates the possibility of opening a flow path due to the spurious opening of one valve.

A break of the vent line on the reactor vessel head is categorized as a small break LOCA of not greater than one-inch diameter. Such a break is similar to those analyzed in Subsection 15.6.5. The break of the reactor vessel head vent line behaves similarly with a hot leg break. Hence, the results presented therein conservatively envelopes the reactor vessel head vent line break case.

The overview of the reactor vessel head vent system operation is as follows:

- The operation is needed when core damage occurs and RCS water level is lowered.
- The size of a non-condensable bubble is estimated from reading the reactor vessel water level indication.

- The operation is started when core damage has occurred and cladding oxidation is in progress.
- The operation requires instruments for dose rate in containment, core exit temperature and RV water level.

The operations are initiated and terminated manually in accordance with the above-described conditions.

(B) Safety depressurization valve

The block valve is provided at the upstream of each SDV in series so that a single failure of the remotely operated vent valves, power supply, or control system does not prevent isolation of the flow path.

The overview of system operation is as follows:

- The operation is needed when heat removal from the SG fails and SG water level is lowered with respect to wide range.
- Core damage does not occur in the assumed conditions so that non-condensable bubbles must not be generated in the RCS.
- The operation is started when decay heat is not removed from the core due to low SG water level but the core is still intact.
- The operation requires instruments for SG water level (wide range).
- The operations are initiated and terminated manually in accordance with the above-described conditions.

(C) Depressurization valve

The DVs are two normally closed valves in series in a flow path. This arrangement eliminates the possibility of opening a flow path due to the spurious opening of one valve.

The overview of the DVs operation is as follows:

- The operation is needed when RCS is higher than the pressure in which HPME probably occurs after onset of core damage.
- The size of a non-condensable bubble is estimated from reading of RV water level indication.
- The operation is started when the heat removal from the core fails after onset of core damage.

- The operation requires instruments for dose rate in containment, core exit temperature, and RCS pressure, and information on success and failure of both vessel head vent valves and reactor core coolant injection.

The operations are initiated and terminated manually in accordance with the above-described conditions.

Human factor engineering is discussed in Chapter 18 and combustible gas control is discussed in Chapter 19.

5.4.12.4 Inspection and Testing Requirements

Subsection 3.9.6 discusses inservice testing and inspection of valves. Subsection 5.2.4 discusses inservice inspection and testing of ASME Code, Class 1 components that are part of the RCPB.

5.4.12.5 Instrumentation Requirements

The reactor vessel head vent valves, SDVs, and DVs can be operated from the MCR. The valves have position sensors. The position indication for each motor-operated valve is monitored in the MCR.

Table 5.4.12-1 Reactor vessel head vent Design Parameters

System design pressure (psig)	2,485
System design temperature (°F)	650
Piping diameter (in)	1 (schedule 160)
Hydrogen gas discharging capacity at 1,200 psia (lbm/h)	0.43

Table 5.4.12-2 Safety Depressurization Valve Design Parameters

Type	Motor operated valve
System design pressure (psig)	2,485
System design temperature (°F)	680
Number	2
Saturated steam discharging capacity at 2,335 psig (lb/h)	530,000

Table 5.4.12-3 Depressurization Valve Design Parameters

Type	Motor operated valve
System design pressure (psig)	2,485
System design temperature (°F)	680
Number	2
Saturated steam discharging capacity at 2335 psig (lb/h)	795,000

5.4.13 Combined License Information

COL 5.4(1) Deleted

COL 5.4(2) Deleted

COL 5.4(3) Deleted

COL 5.4(4) Deleted

COL 5.4(5) Deleted

COL 5.4(6) Deleted

COL 5.4(7) Deleted

5.4.14 References

5.4-1 Definitions, NRC Regulations Title 10, Code of Federal Regulations, 50.2.

5.4-2 Contents of Construction Permit and Operating License Applications; Technical Information, NRC Regulations Title 10, Code of Federal Regulations, 50.34.

5.4-3 Combustible Gas Control for Nuclear Power Reactors, NRC Regulations Title 10, Code of Federal Regulations, 50.44.

5.4-4 Acceptance Criteria for Emergency Core Cooling Systems for Light-Water Nuclear Power Reactors, NRC Regulations Title 10, Code of Federal Regulations, 50.46

5.4-5 Acceptance Criteria for Reactor Coolant System Venting Systems, NRC Regulations Title 10, Code of Federal Regulations, 50.46a.

5.4-6 Environmental Qualification of Electric Equipment Important to Safety for Nuclear Power Plants, NRC Regulations Title 10, Code of Federal Regulations, 50.49.

5.4-7 Codes and Standards, NRC Regulations Title 10, Code of Federal Regulations, 50.55a

5.4-8 General Design Criteria for Nuclear Power Plants, NRC Regulations Title 10, Code of Federal Regulations, 50 Appendix A.

5.4-9 Reactor Coolant Pump Flywheel Integrity, Regulatory Guide 1.14, Rev.1, U.S. NRC, Washington, DC, August 1975.

5.4-10 Control of the Use of Sensitized Stainless Steel, Regulatory Guide 1.44, Rev.0, May 1973.

5.4-11 Materials and Inspections for Reactor Vessel Closure Studs, Regulatory Guide 1.65, Rev. 0, October 1973.

5.4-12 Bases for Plugging Degraded PWR Steam Generator Tubes, Regulatory Guide 1.121, Rev.0, August 1976.

5.4-13 Materials, ASME Boiler and Pressure Vessel Code, Sec.II, ASME, 2001 Edition with 2003 Addenda.

5.4-14 Rules for Construction of Nuclear Power Plant Components, ASME Boiler and Pressure Vessel Code, Section III, ASME, 2001 Edition with 2003 Addenda.

5.4-15 Rules for Inservice Inspection of Nuclear Power Plant Components, ASME Boiler and Pressure Vessel Code, Section XI, ASME, 2001 Edition with 2003 Addenda.

5.4-16 nuclear safety criteria for the design of stationary pressurized water reactor plants, American Nuclear Society, ANSI/ANS-51.1-1983.

5.4-17 Nuclear Energy Institute, Steam Generator Program Guidelines, NEI 97-06, Revision 2, May 2005.

5.4-18 Structural Analysis for US-APWR Reactor Coolant Pump Motor Flywheel, MUAP-07035-NP (Non-Proprietary), Rev.0, December 2007.

5.4-19 Kusakabe, T, Yonezawa, T., and Tokunaga, S. Research on Corrosion Resistance of Steam Generator Tube. MHI Technical Review, Vol. 33, No. 1 Ser. No.95, February 1996.

5.4-20 Nakamura, T., Fujita, K., Kawanishi, K., Yamaguchi, N., and Tsuge, A. Study in the vibrational characteristics of a tube array caused by two-phase flow-Part 1: Random vibration. Transaction of the ASME, 472/Vol. 114, November 1992.

5.4-21 Comprehensive Vibration Assessment Program for Reactor Internals During Preoperational and Initial Startup Testing, Regulatory Guide 1.20, Rev.3, Mar. 2007.

5.4-22 Standard Technical Specifications Westinghouse Plants, NUREG-1431, Revision 3.1, December, 2005.