DESIGN CONTROL DOCUMENT FOR THE

US-APWR

Chapter 3

Design of Structures,Systems,Components and Equipment

MUAP- DC003

REVISION 1

AUGUST 2008

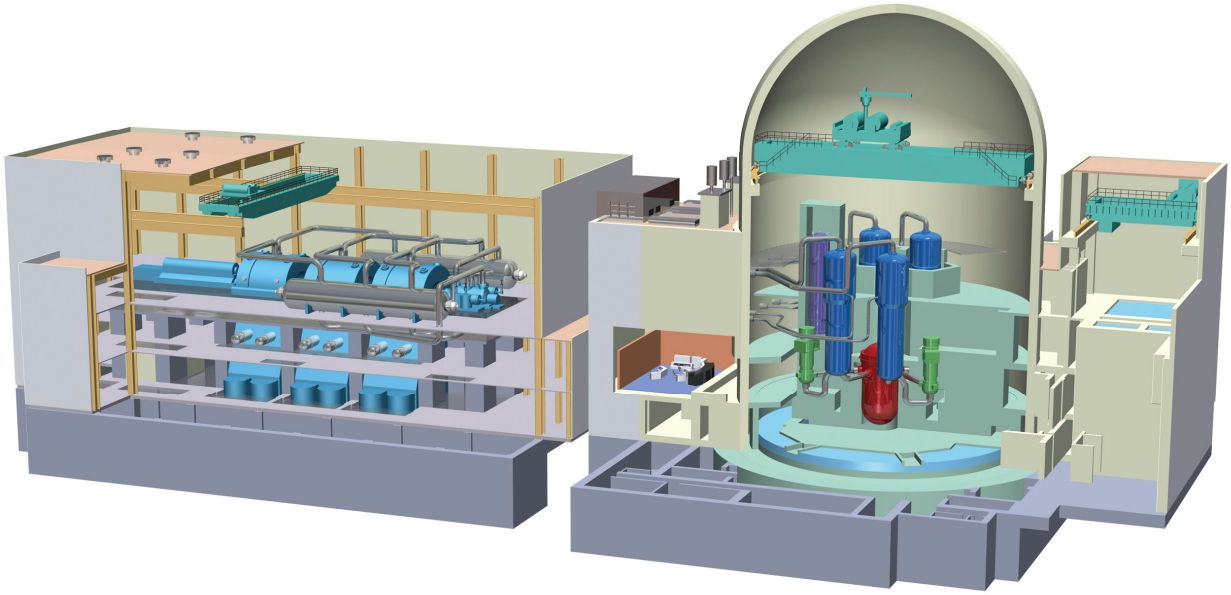

MITSUBISHI HEAVY INDUSTRIES, LTD.

©2008
Mitsubishi Heavy Industries, Ltd.
All Rights Reserved

© 2008

MITSUBISHI HEAVY INDUSTRIES, LTD.

All Rights Reserved

This document has been prepared by Mitsubishi Heavy Industries, Ltd. ("MHI") in connection with the U.S. Nuclear Regulatory Commission's ("NRC") licensing review of MHI's US-APWR nuclear power plant design. No right to disclose, use or copy any of the information in this document, other than by the NRC and its contractors in support of the licensing review of the US-APWR, is authorized without the express written permission of MHI.

This document contains technology information and intellectual property relating to the US-APWR and it is delivered to the NRC on the express condition that it not be disclosed, copied or reproduced in whole or in part, or used for the benefit of anyone other than MHI without the express written permission of MHI, except as set forth in the previous paragraph.

This document is protected by the laws of Japan, U.S. copyright law, international treaties and conventions, and the applicable laws of any country where it is being used.

Mitsubishi Heavy Industries, Ltd.

16-5, Konan 2-chome, Minato-ku

Tokyo 108-8215 Japan

CONTENTS

Page

3.0 DESIGN OF STRUCTURES, SYSTEMS, COMPONENTS, AND EQUIPMENT

3.1 Conformance with NRC General Design Criteria 3.1-1

3.1.1 Overall Requirements 3.1-1

3.1.1.1 Criterion 1 – Quality Standards and Records 3.1-1

3.1.1.2 Criterion 2 – Design Bases for Protection Against Natural Phenomena 3.1-2

3.1.1.3 Criterion 3 – Fire Protection 3.1-2

3.1.1.4 Criterion 4 – Environmental and Dynamic Effects Design Bases 3.1-3

3.1.1.5 Criterion 5 – Sharing of Structures, Systems, and Components 3.1-4

3.1.2 Protection by Multiple Fission Product Barriers 3.1-4

3.1.2.1 Criterion 10 – Reactor Design 3.1-4

3.1.2.2 Criterion 11 – Reactor Inherent Protection 3.1-5

3.1.2.3 Criterion 12 – Suppression of Reactor Power Oscillations 3.1-5

3.1.2.4 Criterion 13 – Instrumentation and Control 3.1-6

3.1.2.5 Criterion 14 – Reactor Coolant Pressure Boundary 3.1-7

3.1.2.6 Criterion 15 – Reactor Coolant System Design 3.1-8

3.1.2.7 Criterion 16 – Containment Design 3.1-8

3.1.2.8 Criterion 17 – Electrical Power Systems 3.1-9

3.1.2.9 Criterion 18 – Inspection and Testing of Electric Power Systems 3.1-11

3.1.2.10 Criterion 19 – Control Room 3.1-12

3.1.3 Protection and Reactivity Control Systems 3.1-13

3.1.3.1 Criterion 20 – Protection System Functions 3.1-13

3.1.3.2 Criterion 21 – Protection System Reliability and Testability 3.1-13

3.1.3.3 Criterion 22 – Protection System Independence 3.1-14

Page

3.1.3.4 Criterion 23 – Protection System Failure Modes 3.1-15

3.1.3.5 Criterion 24 – Separation of Protection and Control Systems 3.1-16

3.1.3.6 Criterion 25 – Protection System Requirements for Reactivity Control Malfunctions 3.1-16

3.1.3.7 Criterion 26 – Reactivity Control System Redundancy and Capability 3.1-17

3.1.3.8 Criterion 27 – Combined Reactivity Control Systems Capability 3.1-18

3.1.3.9 Criterion 28 – Reactivity Limits 3.1-18

3.1.3.10 Criterion 29 – Protection against Anticipated Operational Occurrences 3.1-19

3.1.4 Fluid Systems 3.1-19

3.1.4.1 Criterion 30 – Quality of Reactor Coolant Pressure Boundary 3.1-19

3.1.4.2 Criterion 31 – Fracture Prevention of Reactor Coolant Pressure Boundary 3.1-20

3.1.4.3 Criterion 32 – Inspection of Reactor Coolant Pressure Boundary .. 3.1-21

3.1.4.4 Criterion 33 – Reactor Coolant Makeup 3.1-22

3.1.4.5 Criterion 34 – Residual Heat Removal 3.1-22

3.1.4.6 Criterion 35 – Emergency Core Cooling 3.1-23

3.1.4.7 Criterion 36 – Inspection of Emergency Core Cooling System..... 3.1-25

3.1.4.8 Criterion 37 – Testing of Emergency Core Cooling System 3.1-25

3.1.4.9 Criterion 38 – Containment Heat Removal 3.1-26

3.1.4.10 Criterion 39 – Inspection of Containment Heat Removal System... 3.1-27

3.1.4.11 Criterion 40 – Testing of Containment Heat Removal System 3.1-27

3.1.4.12 Criterion 41 – Containment Atmosphere Cleanup 3.1-28

3.1.4.13 Criterion 42 – Inspection of Containment Atmosphere Cleanup Systems 3.1-29

3.1.4.14 Criterion 43 – Testing of Containment Atmospheric Cleanup Systems 3.1-29

Page

3.1.4.15 Criterion 44 – Cooling Water 3.1-30

3.1.4.16 Criterion 45 – Inspection of Cooling Water System 3.1-30

3.1.4.17 Criterion 46 – Testing of Cooling Water System 3.1-31

3.1.5 Reactor Containment 3.1-31

3.1.5.1 Criterion 50 – Containment Design Basis 3.1-31

3.1.5.2 Criterion 51 – Fracture Prevention of Containment Pressure Boundary 3.1-32

3.1.5.3 Criterion 52 – Capability for Containment Leakage Rate Testing 3.1-33

3.1.5.4 Criterion 53 – Provisions for Containment Testing and Inspection 3.1-33

3.1.5.5 Criterion 54 – Piping Systems Penetrating Containment 3.1-33

3.1.5.6 Criterion 55 – Reactor Coolant Pressure Boundary Penetrating Containment 3.1-34

3.1.5.7 Criterion 56 – Primary Containment Isolation 3.1-35

3.1.5.8 Criterion 57 – Closed System Isolation Valves 3.1-36

3.1.6 Fuel and Reactivity Control 3.1-36

3.1.6.1 Criterion 60 – Control of Releases of Radioactive Materials to the Environment 3.1-36

3.1.6.2 Criterion 61 – Fuel Storage and Handling and Radioactivity Control 3.1-37

3.1.6.3 Criterion 62 – Prevention of Criticality in Fuel Storage and Handling 3.1-38

3.1.6.4 Criterion 63 – Monitoring Fuel and Waste Storage 3.1-38

3.1.6.5 Criterion 64 – Monitoring Radioactivity Releases 3.1-39

3.1.7 Combined License Information 3.1-39

3.1.8 References 3.1-39

3.2 Classification of Structures, Systems, and Components 3.2-1

3.2.1 Seismic Classification 3.2-1

3.2.1.1 Definitions 3.2-3

Page

3.2.1.2 Classifications 3.2-4
3.2.1.3 Classification of Building Structures 3.2-5
3.2.2 System Quality Group Classification 3.2-5
3.2.2.1 Equipment Class 1 ..... 3.2-7
3.2.2.2 Equipment Class 2 ..... 3.2-7
3.2.2.3 Equipment Class 3 ..... 3.2-8
3.2.2.4 Equipment Class 4 ..... 3.2-9
3.2.2.5 Other Equipment Classes 3.2-10
3.2.2.6 Inspection Requirements 3.2-11
3.2.3 Combined License Information 3.2-11
3.2.4 References 3.2-11
3.3 Wind and Tornado Loadings 3.3-1
3.3.1 Wind Loadings 3.3-1
3.3.1.1 Design Wind Velocity and Recurrence Interval 3.3-1
3.3.1.2 Determination of Applied Forces 3.3-1
3.3.2 Tornado Loadings 3.3-3
3.3.2.1 Applicable Design Parameters 3.3-4
3.3.2.2 Determination of Forces on Structures 3.3-4
3.3.2.3 Effect of Failure of Structures or Components Not Designed for Tornado Loads 3.3-6
3.3.3 Combined License Information 3.3-7
3.3.4 References 3.3-7
3.4 Water Level (Flood) Design 3.4-1
3.4.1 Flood Protection 3.4-1
3.4.1.1 Flood Protection for Safety and Non Safety-Related Structures, Systems, and Components 3.4-1

Page

3.4.1.2 Flood Protection from External Sources 3.4-2

3.4.1.3 Flood Protection from Internal Sources 3.4-4

3.4.1.4 Evaluation of External Flooding 3.4-7

3.4.1.5 Evaluation of Internal Flooding 3.4-7

3.4.2 Analysis Procedures 3.4-21

3.4.3 Combined License Information 3.4-22

3.4.4 References 3.4-23

3.5 Missile Protection 3.5-1

3.5.1 Missile Selection and Description 3.5-2

3.5.1.1 Internally Generated Missiles (Outside Containment) 3.5-2

3.5.1.2 Internally Generated Missiles (Inside Containment) 3.5-7

3.5.1.3 Turbine Missiles 3.5-9

3.5.1.4 Missiles Generated by Tornadoes and Extreme Winds 3.5-10

3.5.1.5 Site Proximity Missiles (Except Aircraft) 3.5-11

3.5.1.6 Aircraft Hazards 3.5-11

3.5.2 Structures, Systems, and Components to be Protected from Externally Generated Missiles 3.5-11

3.5.3 Barrier Design Procedures 3.5-11

3.5.3.1 Evaluation of Local Structural Effects 3.5-12

3.5.3.2 Evaluation of Overall Structural Effects 3.5-14

3.5.4 Combined License Information 3.5-15

3.5.5 References 3.5-16

3.6 Protection Against Dynamic Effects Associated with Postulated Rupture of Piping 3.6-1

3.6.1 Plant Design for Protection against Postulated Piping Failure in Fluid Systems Inside and Outside Containment 3.6-1

3.6.1.1 Design Basis 3.6-2

Page

3.6.1.2 Safety Evaluation 3.6-5

3.6.1.3 Postulated Failures Associated with Site-Specific Piping 3.6-8

3.6.2 Determination of Rupture Locations and Dynamic Effects Associated with the Postulated Rupture of Piping 3.6-8

3.6.2.1 Criteria used to Define Break and Crack Location and Configuration 3.6-9

3.6.2.2 Guard Pipe Assembly Design Criteria 3.6-14

3.6.2.3 Analytic Methods to Define Forcing Functions and Response Models 3.6-14

3.6.2.4 Dynamic Analysis Methods to Verify Integrity and Operability 3.6-17

3.6.2.5 Implementation of Criteria Dealing with Special Features 3.6-21

3.6.3 LBB Evaluation Procedures 3.6-22

3.6.3.1 Application of LBB Criteria 3.6-22

3.6.3.2 Design Criteria for LBB 3.6-23

3.6.3.3 Potential Failure Mechanism for Piping 3.6-24

3.6.3.4 Analytical Methods and Criteria 3.6-28

3.6.3.5 Technical Report 3.6-32

3.6.4 Combined License Information 3.6-32

3.6.5 References 3.6-33

3.7 Seismic Design 3.7-1

3.7.1 Seismic Design Parameters 3.7-1

3.7.1.1 Design Ground Motion 3.7-1

3.7.1.2 Percentage of Critical Damping Values 3.7-9

3.7.1.3 Supporting Media for Seismic Category I Structures 3.7-10

3.7.2 Seismic System Analysis 3.7-11

3.7.2.1 Seismic Analysis Methods 3.7-13

3.7.2.2 Natural Frequencies and Responses 3.7-16

Page

3.7.2.3 Procedures Used for Analytical Modeling 3.7-17

3.7.2.4 Soil-Structure Interaction 3.7-28

3.7.2.5 Development of Floor Response Spectra 3.7-32

3.7.2.6 Three Components of Earthquake Motion 3.7-34

3.7.2.7 Combination of Modal Responses 3.7-35

3.7.2.8 Interaction of Non-Seismic Category I Structures with Seismic Category I Structures 3.7-38

3.7.2.9 Effects of Parameter Variations on Floor Response Spectra 3.7-42

3.7.2.10 Use of Constant Vertical Static Factors 3.7-42

3.7.2.11 Method Used to Account for Torsional Effects 3.7-42

3.7.2.12 Comparison of Responses 3.7-43

3.7.2.13 Methods for Seismic Analysis of Dams 3.7-43

3.7.2.14 Determination of Dynamic Stability of Seismic Category I Structures 3.7-43

3.7.2.15 Analysis Procedure for Damping 3.7-44

3.7.3 Seismic Subsystem Analysis 3.7-44

3.7.3.1 Seismic Analysis Methods 3.7-45

3.7.3.2 Procedures Used for Analytical Modeling 3.7-50

3.7.3.3 Analysis Procedure for Damping 3.7-50

3.7.3.4 Three Components of Earthquake Motion 3.7-50

3.7.3.5 Combination of Modal Responses 3.7-51

3.7.3.6 Use of Constant Vertical Static Factors 3.7-51

3.7.3.7 Buried Seismic Category I Piping, Conduits, and Tunnels 3.7-51

3.7.3.8 Methods for Seismic Analysis of Category I Concrete Dams 3.7-52

3.7.3.9 Methods for Seismic Analysis of Aboveground Tanks 3.7-52

3.7.4 Seismic Instrumentation 3.7-52

Page

3.7.4.1 Comparison with Regulatory Guide 1.12 ..... 3.7-53
3.7.4.2 Location and Description of Instrumentation 3.7-54
3.7.4.3 Control Room Operator Notification 3.7-55
3.7.4.4 Comparison with Regulatory Guide 1.166 ..... 3.7-56
3.7.4.5 Instrument Surveillance (Including calibration and testing) 3.7-56
3.7.4.6 Program Implementation 3.7-57
3.7.5 Combined License Information 3.7-57
3.7.6 References 3.7-61
3.8 Design of Category I Structures 3.8-1
3.8.1 Concrete Containment 3.8-1
3.8.1.1 Description of the Containment 3.8-1
3.8.1.2 Applicable Codes, Standards, and Specifications 3.8-4
3.8.1.3 Loads and Load Combinations 3.8-4
3.8.1.4 Design and Analysis Procedures 3.8-8
3.8.1.5 Structural Acceptance Criteria 3.8-14
3.8.1.6 Material, Quality Control, and Special Construction Techniques 3.8-23
3.8.1.7 Testing and Inservice Inspection Requirements 3.8-27
3.8.2 Steel Containment 3.8-30
3.8.3 Concrete and Steel Internal Structures of Concrete Containment 3.8-30
3.8.3.1 Description of the Structures Internal to Containment 3.8-31
3.8.3.2 Applicable Codes, Standards, and Specifications 3.8-34
3.8.3.3 Loads and Load Combinations 3.8-35
3.8.3.4 Design and Analysis Procedures 3.8-37
3.8.3.5 Structural Acceptance Criteria 3.8-43
3.8.3.6 Materials, Quality Control, and Special Construction Techniques 3.8-44

Page

3.8.3.7 Testing and Inservice Inspection Requirements 3.8-44

3.8.4 Other Seismic Category I Structures 3.8-44

3.8.4.1 Description of the Structures 3.8-45

3.8.4.2 Applicable Codes, Standards, and Specifications 3.8-47

3.8.4.3 Loads and Load Combinations 3.8-48

3.8.4.4 Design and Analysis Procedures 3.8-55

3.8.4.5 Structural Acceptance Criteria 3.8-62

3.8.4.6 Materials, Quality Control, and Special Construction Techniques 3.8-62

3.8.4.7 Testing and Inservice Inspection Requirements 3.8-68

3.8.5 Foundations 3.8-69

3.8.5.1 Description of the Foundations 3.8-69

3.8.5.2 Applicable Codes, Standards and Specifications 3.8-70

3.8.5.3 Loads and Load Combinations 3.8-70

3.8.5.4 Design and Analysis Procedures 3.8-71

3.8.5.5 Structural Acceptance Criteria 3.8-75

3.8.5.6 Materials, Quality Control, and Special Construction Techniques 3.8-76

3.8.5.7 Testing and Inservice Inspection Requirements 3.8-76

3.8.6 Combined License Information 3.8-77

3.8.7 References 3.8-79

3.9 Mechanical Systems and Components 3.9-1

3.9.1 Special Topics for Mechanical Components 3.9-1

3.9.1.1 Design Transients 3.9-1

3.9.1.2 Computer Programs Used in Analyses 3.9-14

3.9.1.3 Experimental Stress Analysis 3.9-15

Page

3.9.1.4 Considerations for the Evaluation for the Faulted Condition 3.9-15

3.9.2 Dynamic Testing and Analysis of Systems, Components, and Equipment 3.9-15

3.9.2.1 Piping Vibration, Thermal Expansion, and Dynamic Effects.....3.9-15

3.9.2.2 Seismic Analysis and Qualification of Seismic Category I Mechanical Equipment.....3.9-18

3.9.2.3 Dynamic Response Analysis of Reactor Internals under Operational Flow Transients and Steady-State Conditions.....3.9-21

3.9.2.4 Preoperational Flow-Induced Vibration Testing of Reactor Internals 3.9-25

3.9.2.5 Dynamic System Analysis of the Reactor Internals under Faulted Conditions.....3.9-26

3.9.2.6 Correlations of Reactor Internals Vibration Tests with the Analytical Results.....3.9-30

3.9.3 ASME Code Class 1, 2, and 3 Components, Component Supports, and Core Support Structure.....3.9-30

3.9.3.1 Loading Combinations, System Operating Transients, and Stress Limits 3.9-32

3.9.3.2 Design and Installation of Pressure-Relief Devices.....3.9-40

3.9.3.3 Pump and Valve Operability Assurance 3.9-42

3.9.3.4 Component Supports.....3.9-44

3.9.4 Control Rod Drive Systems 3.9-55

3.9.4.1 Descriptive Information of CRDS.....3.9-55

3.9.4.2 Applicable CRDS Design Specifications 3.9-60

3.9.4.3 Design Loads, Stress Limits, and Allowable Deformations 3.9-61

3.9.4.4 CRDS Operability Assurance Program 3.9-62

3.9.5 Reactor Pressure Vessel Internals.....3.9-63

3.9.5.1 Design Arrangements.....3.9-63

3.9.5.2 Loading Conditions.....3.9-69

Page

3.9.5.3 Design Bases 3.9-70

3.9.6 Functional Design, Qualification, and Inservice Testing Programs for Pumps, Valves, and Dynamic Restraints 3.9-75

3.9.6.1 Functional Design and Qualification of Pumps, Valves, and Dynamic Restraints 3.9-76

3.9.6.2 IST Program for Pumps 3.9-77

3.9.6.3 IST Program for Valves 3.9-77

3.9.6.4 IST Program for Dynamic Restraints 3.9-81

3.9.6.5 Relief Request and Authorization to ASME OM Code 3.9-82

3.9.7 [Reserved] 3.9-82

3.9.8 [Reserved] 3.9-82

3.9.9 Combined License Information 3.9-82

3.9.10 References 3.9-83

3.10 Seismic and Dynamic Qualification of Mechanical and Electrical Equipment 3.10-1

3.10.1 Seismic Qualification Criteria 3.10-2

3.10.1.1 Qualification Standards 3.10-2

3.10.1.2 Performance Requirements for Seismic Qualification 3.10-3

3.10.1.3 Performance Criteria 3.10-4

3.10.2 Methods and Procedures for Qualifying Mechanical and Electrical Equipment and Instrumentation 3.10-4

3.10.2.1 Seismic Qualification of Instrumentation and Electrical Equipment 3.10-10

3.10.2.2 Seismic and Operability Qualification of Active Mechanical Equipment 3.10-11

3.10.2.3 Pump Motor and Valve Operator Qualification 3.10-16

3.10.2.4 Seismic Qualification of Other Seismic Category I Mechanical Equipment 3.10-16

Page

3.10.3 Methods and Procedures of Analysis or Testing of Supports of Mechanical and Electrical Equipment and Instrumentation 3.10-16

3.10.4 Test and Analyses Results and Experience Database 3.10-17

3.10.4.1 Implementation Program and Milestones 3.10-18

3.10.4.2 Experience Based Qualification 3.10-18

3.10.5 Combined License Information 3.10-18

3.10.6 References 3.10-19

3.11 Environmental Qualification of Mechanical and Electrical Equipment 3.11-1

3.11.1 Equipment Location and Environmental Conditions 3.11-3

3.11.1.1 Equipment Identification 3.11-4

3.11.1.2 Definition of Environmental Conditions 3.11-4

3.11.1.3 Equipment Operability Times (Term) 3.11-5

3.11.1.4 Standard Review Plan Evaluation 3.11-6

3.11.2 Qualification Tests and Analyses 3.11-6

3.11.2.1 Environmental Qualification of Electrical and Mechanical Equipment 3.11-7

3.11.2.2 Environmental Qualification of Mechanical Equipment 3.11-8

3.11.3 Qualification Test Results 3.11-9

3.11.4 Loss of Ventilation 3.11-9

3.11.5 Estimated Chemical and Radiation Environment 3.11-10

3.11.5.1 Chemical Environment 3.11-10

3.11.5.2 Radiation Environment 3.11-10

3.11.6 Qualification of Mechanical Equipment 3.11-11

3.11.7 Combined License Information 3.11-11

3.11.8 References 3.11-12

3.12 Piping Design Review 3.12-1

Page

3.12.1 Introduction 3.12-1

3.12.2 Codes and Standards 3.12-1

3.12.2.1 American Society of Mechanical Engineers Boiler and Pressure Vessel Code 3.12-1

3.12.2.2 American Society of Mechanical Engineers Code Cases 3.12-1

3.12.2.3 Design Specification 3.12-2

3.12.3 Piping Analysis Methods 3.12-2

3.12.3.1 Experimental Stress Analyses 3.12-2

3.12.3.2 Modal Response Spectrum Method 3.12-2

3.12.3.3 Response Spectra Method (or Independent Support Motion Method) 3.12-4

3.12.3.4 Time-History Method 3.12-5

3.12.3.5 Inelastic Analyses Methods 3.12-5

3.12.3.6 Small-Bore Piping Method 3.12-5

3.12.3.7 Non-seismic/Seismic Interaction (II/I) 3.12-6

3.12.3.8 Seismic Category I Buried Piping 3.12-6

3.12.4 Piping Modeling Technique 3.12-6

3.12.4.1 Computer Codes 3.12-6

3.12.4.2 Dynamic Piping Model 3.12-7

3.12.4.3 Piping Benchmark Program 3.12-8

3.12.4.4 Decoupling Criteria 3.12-8

3.12.5 Piping Stress Analysis Criteria 3.12-9

3.12.5.1 Seismic Input Envelope vs. Site-Specific Spectra 3.12-9

3.12.5.2 Design Transients 3.12-9

3.12.5.3 Loadings and Load Combination 3.12-9

3.12.5.4 Damping Values 3.12-11

Page

3.12.5.5 Combination of Modal Responses 3.12-12

3.12.5.6 High-Frequency Modes 3.12-12

3.12.5.7 Fatigue Evaluation of ASME Code Class 1 Piping 3.12-12

3.12.5.8 Fatigue Evaluation of ASME Code Class 2 and 3 Piping 3.12-12

3.12.5.9 Thermal Oscillations in Piping Connected to the Reactor Coolant System 3.12-13

3.12.5.10 Thermal Stratification 3.12-13

3.12.5.11 Safety Relief Valve Design, Installation, and Testing 3.12-14

3.12.5.12 Functional Capability 3.12-14

3.12.5.13 Combination of Inertial and Seismic Anchor Motion Effects 3.12-15

3.12.5.14 Operating-Basis Earthquake as a Design Load 3.12-15

3.12.5.15 Welded Attachments 3.12-15

3.12.5.16 Modal Damping for Composite Structures 3.12-15

3.12.5.17 Minimum Temperature for Thermal Analyses 3.12-15

3.12.5.18 Intersystem Loss-of-Coolant Accident 3.12-15

3.12.5.19 Effects of Environment on Fatigue Design 3.12-15

3.12.6 Piping Support Design Criteria 3.12-15

3.12.6.1 Applicable Codes 3.12-15

3.12.6.2 Jurisdictional Boundaries 3.12-16

3.12.6.3 Loads and Load Combinations 3.12-17

3.12.6.4 Pipe Support Baseplate and Anchor Bolt Design 3.12-18

3.12.6.5 Use of Energy Absorber and Limit Stops 3.12-18

3.12.6.6 Use of Snubbers 3.12-18

3.12.6.7 Pipe Support Stiffness 3.12-19

3.12.6.8 Seismic Self-Weight Excitation 3.12-20

3.12.6.9 Design of Supplementary Steel 3.12-20

Page

3.12.6.10 Consideration of Friction Forces 3.12-20

3.12.6.11 Pipe Support Gaps and Clearances 3.12-21

3.12.6.12 Instrumentation Line Support Criteria 3.12-21

3.12.6.13 Pipe Deflection Limit 3.12-21

3.12.7 Combined License Information 3.12-21

3.12.8 References 3.12-22

3.13 Threaded Fasteners (ASME Code Class 1, 2, and 3) 3.13-1

3.13.1 Design Considerations 3.13-1

3.13.1.1 Materials Selection 3.13-1

3.13.1.2 Special Materials Fabrication Processes and Special Controls 3.13-3

3.13.1.3 Fracture Toughness Requirements for Threaded Fasteners Made of Ferritic Materials 3.13-7

3.13.1.4 [Reserved] 3.13-10

3.13.1.5 Certified Material Test Reports 3.13-10

3.13.2 Inservice Inspection Requirements 3.13-11

3.13.3 Combined License Information 3.13-13

3.13.4 References 3.13-13

APPENDICES

Appendix 3A Heating, Ventilation, and Air Conditioning Ducts and Duct Supports 3A-1

Appendix 3B Bounding Analysis Curve Development for Leak Before Break Evaluation of High-Energy Piping for US-APWR 3B-1

Appendix 3C Reactor Coolant Loop Analysis Methods 3C-1

Appendix 3D US-APWR Equipment Qualification List Safety and Important to Safety Electrical and Mechanical Equipment 3D-1

Appendix 3E High Energy and Moderate Energy Piping in the Pipestressed Concrete Containment Vessel and Reactor Building 3E-1

Page

Appendix 3F Design of Conduit and Conduit Supports 3F-1

Appendix 3G Seismic Qualification of Cable Trays and Supports..... 3G-1

Appendix 3H Model Properties and Seismic Analysis Results for Lump Mass Stick Models of R/B-PCCV-Containment Interior Structures on a Common Basemat, PS/Bs on Individual Basemats..... 3H-1

Appendix 3I In-Structure Response Spectra 3I-1

Appendix 3J Reactor, Power Source and Containment Internal Structural Design..... 3J-1

TABLES

Page

Table 3.2-1 Non-Safety Components Required for Normal Shutdown 3.2-14
Table 3.2-2 Classification of Mechanical and Fluid Systems, Components, and Equipment 3.2-16
Table 3.2-3 Comparison of Various Requirements to Equipment Class 3.2-69
Table 3.2-4 Seismic Classification of Buildings and Structures 3.2-70
Table 3.6-1 High and Moderate Energy Fluid Systems 3.6-35
Table 3.7.1-1 CSDRS Horizontal Acceleration Values and Control Points 3.7-65
Table 3.7.1-2 CSDRS Vertical Acceleration Values and Control Points 3.7-66
Table 3.7.1-3 Major Dimensions of Seismic Category I Structures 3.7-67
Table 3.7.1-4 Comparison of 5% Damping ARS of Artificial Time Histories with 5% damping CSDRS 3.7-68
Table 3.7.1-5 Duration of Motion of US-APWR Artificial Time Histories with Respect to Arias Intensity 3.7-69
Table 3.7.2-1 Summary of Dynamic Analysis and Combination Techniques 3.7-70
Table 3.7.2-2 Concrete Material Constants 3.7-71
Table 3.7.2-3 Seismic SSI Analysis Cases 3.7-72
Table 3.7.3-1(a) SSE Damping Values 3.7-73
Table 3.7.3-1(b) OBE Damping Values 3.7-73
Table 3.8.1-1 US-APWR PCCV Basic Design Specification 3.8-84
Table 3.8.1-2 PCCV Load Combinations and Load Factors 3.8-85
Table 3.8.1-3 Temperature Gradients of the R/B and PCCV 3.8-86
Table 3.8.1-4 Summary of PCCV Models and Analysis Methods 3.8-88
Table 3.8.3-1 Type of Construction and Dead Weight of Floor Sections 3.8-89
Table 3.8.3-2 Design Pressures within Containment Internal Structure 3.8-90
Table 3.8.3-3 Summary of Containment Internal Structure Models and Analysis Methods 3.8-91
Table 3.8.3-4 Axial, Shear and Flexural Stiffness of SC Module Walls 3.8-92
Table 3.8.3-5 Definition of Critical Locations and Thicknesses for Containment Internal Structure 3.8-93
Table 3.8.3-6 Critical Portions of the SC Modules 3.8-94
Table 3.8.4-1 Design Temperatures for Thermal Gradient R/B 3.8-95
Table 3.8.4-2 Temperature Gradients of the PS/Bs 3.8-96
Table 3.8.4-3 Load Combinations and Load Factors for Seismic Category I Concrete Structures 3.8-97

Page

Table 3.8.4-4 Load Combinations and Load Factors for Seismic Category I Steel Structures 3.8-98
Table 3.8.4-5 Summary of R/B and PS/Bs Models and Analysis Methods 3.8-99
Table 3.8.4-6 West Exterior Wall, SECTION 1, Details of Wall Reinforcement 3.8-100
Table 3.8.4-7 South Interior Wall, SECTION 2, Details of Wall Reinforcement 3.8-101
Table 3.8.4-8 North Exterior Wall of Spent Fuel Pit, SECTION 3, Details of Wall Reinforcement 3.8-102
Table 3.8.4-9 South Exterior Wall, SECTION 4, Details of Wall Reinforcement 3.8-103
Table 3.8.4-10 Spent Fuel Pit Slab, AREA 3, Details of Slab Reinforcement 3.8-104
Table 3.8.4-11 Emergency Feedwater Pit Slab, AREA 4, Details of Slab Reinforcement 3.8-104
Table 3.8.4-12 Typical Reinforcement in PS/B South Exterior Wall – SECTION 1 ..... 3.8-105
Table 3.8.4-13 Typical Reinforcement in PS/B Interior Wall – SECTION 2 ..... 3.8-106
Table 3.8.4-14 Typical Reinforcement in PS/B Floor at Elevation 3′-7″– AREA 1 ..... 3.8-106
Table 3.8.5-1 Load Combinations and Minimum Factors for Seismic Category I Concrete Basemats 3.8-107
Table 3.8.5-2 Concrete Properties 3.8-108
Table 3.8.5-3 Supporting Media Conditions 3.8-109
Table 3.8.5-4 Section Thickness and Reinforcement Ratios of Basemat Used in the R/B, PCCV, Containment Internal Structure Evaluation 3.8-110
Table 3.8.5-5 Typical Reinforcement in PS/B Basemat 3.8-112
Table 3.9-1 RCS Design Transients 3.9-88
Table 3.9-2 Reactor Internals Interface Load and Displacement Limits 3.9-90
Table 3.9-3 Minimum Design Loading Combinations for ASME Code, Section III, Class 1, 2, 3 and CS Systems and Components 3.9-91
Table 3.9-4 Minimum Design Loading Combinations for Supports for ASME Code, Section III, Class 1, 2, and 3 Piping and Components 3.9-92
Table 3.9-5 ASME Code, Section III, Class 1, 2, 3, CS, and Support Load Symbols and Definitions 3.9-93
Table 3.9-6 Stress Criteria for ASME Code, Section III, Class 1, Components and Supports and Class CS Core Supports 3.9-95
Table 3.9-7 List of Active Pumps 3.9-96

Page

Table 3.9-8 Stress Criteria for ASME Code, Section III Class 2 and 3 Components and Supports 3.9-99
Table 3.9-9 CRDM Housing Loading Conditions and Load Combinations ... 3.9-100
Table 3.9-10 CRDM Housing Stress Categories and Stress Intensity Limits 3.9-101
Table 3.9-11 Core Support Structure and Threaded Structural Fasteners Loading Conditions and Load Combinations 3.9-102
Table 3.9-12 Core Support Structure Stress Categories and Stress Intensity Limits 3.9-103
Table 3.9-13 Pump IST 3.9-104
Table 3.9-14 Valve Inservice Test Requirements 3.9-111
Table 3.11-1 Summary of US-APWR EQ Program Mechanical SSC Interfaces 3.11-14
Table 3.12-1 ASME Code, Section III, Class 1, 2, 3,CS and Support Load Symbols and Definitions 3.12-25
Table 3.12-2 Loading Combinations for ASME Code, Section III, Class 1 Piping 3.12-26
Table 3.12-3 Loading Combinations for ASME Code, Section III, Class 2 and 3 Piping 3.12-28
Table 3.12-4 Loading Combinations for Piping Supports 3.12-29
Table 3.12-5 Piping Functional Capability –ASME Code, Section III, Class 1, 2, and 3 ..... 3.12-30
Table 3.12-6 Design Transients of Reactor Coolant Piping Branch Connections 3.12-31
Table 3.12-7 Evaluation from Viewpoint of Valve Seat Leakage 3.12-32
Table 3.12-8 Evaluation from Viewpoint of Valve Gland Leakage 3.12-33
Table 3.13-1 ASME Code, Section III Criteria for Selection and Testing of Bolting Materials 3.13-15
Table 3.13-2 ASME Code, Section XI Examination Categories for Inservice Inspections of Mechanical Joints in ASME CodeClass 1, 2, and 3 Systems that are Secured by Threaded Fasteners 3.13-16

Figures

Page

Figure 3.6-1 Break Exclusion Region- Main Steam Pipe Room 3.6-36
Figure 3.6-2 Characteristics of Discharging Jets 3.6-37
Figure 3.6-3 Typical Rupture Restraints 3.6-38
Figure 3.6-4 LBB Evaluation Procedure of the US-APWR..... 3.6-39
Figure 3.7.1-1 US–APWR Horizontal CSDRS 3.7-75
Figure 3.7.1-2 US–APWR Vertical CSDRS 3.7-76
Figure 3.7.1-3 Artificial Time Histories Plots (H1) 3.7-77
Figure 3.7.1-4 Artificial Time Histories Plots (H2) 3.7-78
Figure 3.7.1-5 Artificial Time Histories Plots (V) 3.7-79
Figure 3.7.1-6 Artificial Time History Response Spectra (H1) 3.7-80
Figure 3.7.1-7 Artificial Time History Response Spectra (H2) 3.7-81
Figure 3.7.1-8 Artificial Time History Response Spectra (V)..... 3.7-82
Figure 3.7.2-1 FE Model of PCCV 3.7-83
Figure 3.7.2-2 Containment Internal Structure FE Model 3.7-84
Figure 3.7.2-3 FE Model of R/B on Common Basemat..... 3.7-85
Figure 3.7.2-4 FE Model of R/B on Common Basemat..... 3.7-86
Figure 3.7.2-5 Method to Compute Weight and Inertia Moment of Lumped Masses 3.7-87
Figure 3.7.2-6 Method to Compute Section Area, Inertia Moment and Axial Area by Hand Calculations..... 3.7-88
Figure 3.7.2-7 Method to Calculate Equivalent Shear Area..... 3.7-89
Figure 3.7.2-8 Method to Evaluate Vertical Stiffness of PCCV Dome 3.7-90
Figure 3.7.2-9 Fixed-Base FE Model of R/B 3.7-91
Figure 3.7.2-10 Fixed-Base FE Model of Containment Internal Structure 3.7-92
Figure 3.7.2-11 Development of Enveloped Design ISRS 3.7-93
Figure 3.7.2-12 Example Design ISRS 3.7-94
Figure 3.8.1-1 Configuration of PCCV 3.8-113
Figure 3.8.1-2 PCCV Schematic Reinforcing and Tendons..... 3.8-116
Figure 3.8.1-3 Cylinder Liner Anchorage Systems 3.8-117
Figure 3.8.1-4 Dome Liner Anchorage System..... 3.8-118
Figure 3.8.1-5 PCCV General Arrangement, Tendons and Reinforcing..... 3.8-119
Figure 3.8.1-6 Equipment Hatch 3.8-135

Page

Figure 3.8.1-7 Personnel Airlock 3.8-136
Figure 3.8.1-8 Containment Penetrations 3.8-137
Figure 3.8.1-9 Identification of Areas for Temperature Gradients in Table 3.8.1-3 ..... 3.8-153
Figure 3.8.1-10 Transient Conditions of PCCV Atmosphere Temperature (Accident Condition) 3.8-157
Figure 3.8.1-11 Transient Conditions of Temperature of General Sump Pool Water in the PCCV and RWSP 3.8-158
Figure 3.8.1-12 Transient Conditions of Temperature of the SG Compartment Atmosphere and Sump Pool Water (Pipe Break in the SG Compartment) 3.8-159
Figure 3.8.1-13 Transient Conditions of Temperature of the Refueling Cavity Atmosphere and Sump Pool Water (Pipe Break in the Refueling Cavity) 3.8-160
Figure 3.8.3-1 RV Support System 3.8-161
Figure 3.8.3-2 SG Support System 3.8-162
Figure 3.8.3-3 RCP Support System 3.8-166
Figure 3.8.3-4 Pressurizer Support System 3.8-168
Figure 3.8.3-5 SC Module Isometrics 3.8-169
Figure 3.8.3-6 Interior Compartments Wall Layout and Configuration 3.8-177
Figure 3.8.3-7 Typical Details of SC Modules 3.8-184
Figure 3.8.3-8 Polar Crane Supports 3.8-189
Figure 3.8.3-9 Containment Internal Structure Pressure Loads 3.8-192
Figure 3.8.3-10 Containment Internal Structure FE Model 3.8-194
Figure 3.8.3-11 Critical Locations of SC Modules 3.8-195
Figure 3.8.4-1 Identification of Areas for PS/B Temperature Gradients in Table 3.8.4-2 ..... 3.8-196
Figure 3.8.4-2 FE Model of R/B 3.8-198
Figure 3.8.4-3 R/B Critical Sections 3.8-200
Figure 3.8.4-4 Typical Reinforcement in West Exterior Wall - SECTION 1 ..... 3.8-202
Page
Figure 3.8.4-5 Typical Reinforcement in South Interior Wall - SECTION 2 ..... 3.8-203
Figure 3.8.4-6 Typical Reinforcement in North Exterior Wall of Spent Fuel Pit - SECTION 3 ..... 3.8-204
Figure 3.8.4-7 Typical Reinforcement in South Exterior Wall - SECTION 4 ..... 3.8-205
Figure 3.8.4-8 Typical Reinforcement in Spent Fuel Pit Slab - AREA 3 ..... 3.8-206

Page

Figure 3.8.4-9 Typical Reinforcement in Emergency Feedwater Pit Slab - AREA 4 ..... 3.8-207
Figure 3.8.4-10 FE Model of West PS/B 3.8-208
Figure 3.8.4-11 West PS/B Basemat and Wall Critical Sections 3.8-210
Figure 3.8.4-12 West PS/B Wall and Slab Critical Sections 3.8-211
Figure 3.8.4-13 Typical Reinforcement in South Exterior Wall – SECTION 1 (On Column Line CP and Between Column Lines 1P & 2P) 3.8-212
Figure 3.8.4-14 Typical Reinforcement in Interior Wall – SECTION 2 (On Column Line 4P and Between Column Lines BP & CP) 3.8-213
Figure 3.8.4-15 Typical Reinforcement in Floor at Elevation 3′-7″– AREA 1 (Between Column Lines BP & CP - 2P & 3P) 3.8-214
Figure 3.8.5-1 Floor Plan of 1F (EL. -3'-7") 3.8-215
Figure 3.8.5-2 Cross Section of a North-South Orientation 3.8-216
Figure 3.8.5-3 Cross Section of an East-West Orientation 3.8-217
Figure 3.8.5-4 Applicable Codes and Their Region of Application 3.8-218
Figure 3.8.5-5 R/B, PCCV, and Containment Internal Structure Basemat Foundation 3.8-219
Figure 3.8.5-6 Global Three-Dimensional FE Model of R/B, PCCV, and Containment Internal Structure Basemat 3.8-220
Figure 3.8.5-7 Global Three-Dimensional FE Model of R/B, PCCV, and Containment Internal Structure (N-S Section) 3.8-221
Figure 3.8.5-8 Global Three-Dimensional FE Model of R/B, PCCV, and Containment Internal Structure (E-W Section) 3.8-222
Figure 3.8.5-9 Global Three-Dimensional FE Model of R/B, PCCV, and Containment Internal Structure (West Side) 3.8-223
Figure 3.8.5-10 Global Three-Dimensional FE Model of R/B, PCCV, and Containment Internal Structure (Solid Elements) 3.8-224
Figure 3.8.5-11 Reinforcing Steel of Basemat: SECTION N-S 3.8-225
Figure 3.8.5-12 Reinforcing Steel of Basemat: SECTION E-W 3.8-226
Figure 3.8.5-13 Typical Reinforcement in PS/B Basemats 3.8-227
Figure 3.9-1 Typical Mathematical Model of the Reactor Internals for the Seismic and LOCA Dynamic Analysis (RV, Lower Reactor Internals and CRDM) 3.9-249
Figure 3.9-2 Typical Mathematical Model for the Seismic and LOCA Dynamic Analysis (Fuel Assembly, Upper Reactor Internals and Diffuser Plate) 3.9-250
Figure 3.9-3 CRDM 3.9-251
Figure 3.9-4 Reactor Internals General Arrangement 3.9-252

Page

Figure 3.9-5 Upper Reactor Internals Assembly 3.9-253
Figure 3.9-6 Lower Reactor Internals Assembly 3.9-254
Figure 3.9-7 Jurisdictional Boundary between Reactor Internals and RV..... 3.9-255
Figure 3.9-8 Reactor Internals RCS Flow and Bypass Flow Paths..... 3.9-256
Figure 3.11-1 Project EQ Program Implementation Framework 3.11-15

ACRONYMS AND ABBREVIATIONS

A/B	auxiliary building
AC/B	access building
ACI	American Concrete Institute
AISC	American Institute of Steel Construction
ALWR	Advanced Light Water Reactor
ANS	American Nuclear Society
ANSI	American National Standards Institute
AOO	anticipated operational occurrence
ARS	acceleration response spectra
ASCE	American Society of Civil Engineers
ASD	allowable stress design
ASME	American Society of Mechanical Engineers
ASTM	American Society of Testing and Materials
AWS	American Welding Society
BAC	bounding analysis curves
BE	best estimate
BTP	Branch Technical Position
CAV	cumulative absolute velocity
CCP	centrifugal charging pumps
CCW	component cooling water
CCWS	component cooling water system
CFR	Code of Federal Regulations
COL	Combined License
CRDM	control rod drive mechanism
CRDS	control rod drive system
CS	containment spray
CSDRS	certified seismic design response spectra
CSS	containment spray system
C_v	charpy V-notch
CVCS	chemical and volume control system
CWS	circulating water system
DBA	design basis accident
DBFL	design basis flooding level
DCD	Design Control Document
DIF	dynamic increase factor
DLF	dynamic load factor
DOF	degrees of freedom
DBPB	design basis pipe break
ECCS	emergency core cooling system

ACRONYMS AND ABBREVIATIONS (Continued)

EFW	emergency feedwater
EFWS	emergency feedwater system
ELS	emergency letdown system
EPRI	Electrical Power Research Institute
EPS	emergency power source
EQ	environmental qualification
EQSDS	equipment qualification summary data sheet
ESF	engineered safety feature
ESFAS	engineered safety feature actuation system
ESQR	equipment seismic qualification report
ESWPT	essential service water pipe tunnel
ESWS	essential service water system
FE	finite element
FIRS	foundation input response spectra
FW	feedwater
FWS	feedwater system
GA	general arrangement
GDC	General Design Criteria
GMRS	ground motion response spectra
GTG	gas turbine generator
HELB	high-energy line break
HHIS	high-head injection system
HIS	hydrogen ignition system
HMS	hydrogen monitoring system
HRC	rockwell c hardness
HSLA	high strength low alloy
HVAC	heating, ventilation, and air conditioning
HX	heat exchanger
I&C	instrumentation and control
IEEE	Institute of Electrical and Electronic Engineers
ILRT	integrated leak rate test
ISI	inservice inspection
ISM	independent support motion
ISRS	in-structure response spectra
IST	inservice testing
ITAAC	inspections, tests, analyses, and acceptance criteria
ITP	initial test program
LB	lower bound
LBB	leak-before-break

ACRONYMS AND ABBREVIATIONS (Continued)

LOCA	loss-of-coolant accident
LOF	left-out-force
MCR	main control room
MELB	moderate-energy line break
MFIV	main feedwater isolation valve
MOV	motor operated valve
MS	main steam
MSS	main steam supply system
MT	magnetic particle examination method
MTC	moderator temperature coefficient
NCIG	National Construction Issues Group
NDE	nondestructive examination
NDRC	National Defense Research Council
NIST	National Institute of Standards and Technology
NPS	nominal pipe size
NRCA	non-radiological controlled area
NRC	U.S. Nuclear Regulatory Commission
OBE	operating-basis earthquake
OD	outside diameter
P&ID	piping and instrumentation diagram
PC	plant condition
PCCV	prestressed concrete containment vessel
PGA	peak ground acceleration
PIV	pressure isolation valve
PMF	probable maximum flood
PMP	probable maximum precipitation
PORV	power operated relief valve
POV	power operated valve
PS/B	power source building
PSFSV	power source fuel storage vault
PSMS	protection and safety monitoring system
PT	liquid penetrant examination method
PTFE	polytetra fluoroethylene
PWR	pressurized water reactor
QA	quality assurance
QAP	quality assurance program
R/B	reactor building
RCA	radiological controlled area
RCCA	rod control cluster assembly

ACRONYMS AND ABBREVIATIONS (Continued)

RCL	reactor coolant loop
RCP	reactor coolant pump
RCPB	reactor coolant pressure boundary
RCS	reactor coolant system
RG	Regulatory Guide
RHR	residual heat removal
RHRS	residual heat removal system
RIM	required input motion
RPS	reactor protection system
RRS	required response spectra
RT	reactor trip
RV	reactor vessel
RWMS	radioactive waste management systems
RWSAT	refueling water storage auxiliary tank
RWSP	refueling water storage pit
SAM	seismic anchor motion
SC	steel concrete
SCC	stress corrosion cracking
SECY	Secretary of the Commission Letter
SEI	Structural Engineering Institute
SFP	spent fuel pit
SFPCS	spent fuel pit cooling and purification system
SG	steam generator
SI	safety injection
SIP	safety injection pump
SIS	safety injection signal
SLS	safety logic system
SNL	Sandia National Laboratories
SRM	staff requirements memorandum
SRP	Standard Review Plan
SRSS	square root sum of the squares
SS	stainless steel
SSC	structure, system, and component
SSE	safe-shutdown earthquake
SSEA	safe-shutdown earthquake anchor
SSEI	safe-shutdown earthquake inertia
SSI	soil-structure interaction
T/B	turbine building
T/G	turbine generator

ACRONYMS AND ABBREVIATIONS (Continued)

TRS	test response spectrum
UB	upper bound
UHS	ultimate heat sink
UHSRS	ultimate heat sink related structures
U.S.	United States
USM	uniform support motion
UT	ultrasonic examination method
UTS	ultimate tensile strength
VCT	volume control tank
ZPA	zero period accelerations

3.0 DESIGN OF STRUCTURES, SYSTEMS, COMPONENTS, AND EQUIPMENT

3.1 Conformance with NRC General Design Criteria

This section briefly discusses the extent to which the design criteria for the US-APWR safety-related structures, systems, and components (SSCs) comply with Title 10, Code of Federal Regulations (CFR), Part 50, Appendix A, General Design Criteria for Nuclear Power Plants (Reference 3.1-1). As presented in this section, each criterion is first quoted and then discussed in sufficient detail to demonstrate the compliance of the US-APWR with each criterion. For some criteria, additional information may be required for a complete discussion. In such cases, detailed evaluations of compliance with the various General Design Criteria (GDC) are incorporated in other sections (identified by reference).

3.1.1 Overall Requirements

3.1.1.1 Criterion 1 – Quality Standards and Records

> Structures, systems, and components important to safety shall be designed, fabricated, erected, and tested to quality standards commensurate with the importance of the safety functions to be performed. Where generally recognized codes and standards are used, they shall be identified and evaluated to determine their applicability, adequacy, and sufficiency and shall be supplemented or modified as necessary to assure a quality product in keeping with the required safety function. A quality assurance program shall be established and implemented in order to provide adequate assurance that these structures, systems, and components will satisfactorily perform their safety functions. Appropriate records of the design, fabrication, erection, and testing of structures, systems, and components important to safety shall be maintained by or under the control of the nuclear power unit licensee throughout the life of the unit.

3.1.1.1.1 Discussion

The US-APWR safety-related SSCs are identified in Section 3.2. The quality assurance program (QAP) as described in Chapter 17 of this document, along with the quality assurance, quality engineering, and quality control programs of the major contractors and their vendors, assure that safety-related SSCs are designed, procured, fabricated, inspected, erected, and tested to standards commensurate with the safety-related functions to be performed. This is accomplished by using recognized quality codes, standards, and design criteria that comply with the requirements of 10 CFR 50.55a (Reference 3.1-2). As necessary, additional supplemental standards, design criteria, and requirements have been developed by the Mitsubishi Heavy Industries, Ltd. and the major contractors' engineering organizations. Appropriate records that are associated with engineering and design, procurement, fabrication, inspection, erection, testing, document compliance with recognized codes, standards, and design criteria. These records are maintained throughout the life of the plant either by, or under the control of, the Combined License (COL) Applicant/Licensee.

The principal design criteria, design bases, codes, and standards applicable to the facility are described in Section 3.2. Additional detail may be found in the pertinent section of the document dealing with the safety-related SSC(s) (e.g., containment as described in Subsection 3.8.1).

3.1.1.2 Criterion 2 – Design Bases for Protection Against Natural Phenomena

> Structures, systems, and components important to safety shall be designed to withstand the effects of natural phenomena such as earthquakes, tornadoes, hurricanes, floods, tsunami, and seiches without the loss of the capability to perform their safety functions. The design bases for these structures, systems, and components shall reflect: (1) appropriate consideration of the most severe of the natural phenomena that have been historically reported for the site and surrounding area, with sufficient margin for the limited accuracy, quantity, and period of time which the historical data have been accumulated, (2) appropriate combinations of the effects of normal and accident conditions with the effects of the natural phenomena, and (3) The importance of the safety functions to be performed.

3.1.1.2.1 Discussion

The safety-related SSCs are designed either to withstand the effects of natural phenomena without the loss of the capability to perform their safety functions, or are designed such that their response or failure will be in a safe condition. The nature and magnitude of the natural phenomena considered in the design of the plant are discussed in Chapter 2.

Appropriate combinations of structural loadings from normal operation, accident conditions, and natural phenomena are considered in the plant design. This chapter discusses the design of the plant relative to natural events. Seismic, quality group classifications, and other pertinent standards and information, are provided in the sections discussing individual SSCs and in Section 3.2.

3.1.1.3 Criterion 3 – Fire Protection

> Structures, systems, and components important to safety shall be designed and located to minimize, consistent with other safety requirements, the probability and effect of fires and explosions. Noncombustible and heat-resistant materials shall be used wherever practical throughout the unit, particularly in locations such as the containment and control room. Fire detection and fighting systems of appropriate capacity and capability shall be provided and designed to minimize the adverse effects of fires on structures, systems, and components important to safety. Firefighting systems shall be designed to assure that their rupture or inadvertent operation does not significantly impair the safety capability of these structures, systems, and components.

3.1.1.3.1 Discussion

The safety-related SSCs are designed to minimize the probability and effect of fires and explosions. Noncombustible and fire-resistant materials are used in the containment, main control room (MCR), component features of safety systems, and throughout the plant, where fire is a potential risk to safety-related systems. For example, electrical cables have a fire-retardant jacketing, and fire barriers are utilized as described in Subsection 9.5.1. Fire barriers ensure that redundant, safety-related systems and components are separated to assure that a fire in one area will not affect the redundant systems and components in an adjacent area from performing their safety functions. Equipment and facilities for fire protection, including detection, alarm, and extinguishment, are provided to protect both the plant equipment and personnel from fire, explosion, and the resultant release of toxic vapors.

Fire protection is provided by deluge systems (water spray), sprinklers, and portable extinguishers.

Firefighting systems are designed to assure that their rupture or inadvertent operation will not prevent safety-related systems from performing their design functions.

The design of the fire protection system and equipment is performed in accordance with the guidance provided in Standard Review Plan (SRP) 9.5.1 of NUREG-0800 (Reference 3.1-3) and the criteria provided in Regulatory Guide (RG) 1.189, Revision 1, Fire Protection for Nuclear Power Plants (Reference 3.1-4).

See Subsection 9.5.1, for additional information.

3.1.1.4 Criterion 4 – Environmental and Dynamic Effects Design Bases

> Structures, systems, and components important to safety shall be designed to accommodate the effects of and to be compatible with the environmental conditions associated with normal operation, maintenance, testing, and postulated accidents, including loss-of-coolant accidents (LOCAs). These structures, systems, and components shall be appropriately protected against dynamic effects, including the effects of missiles, pipe whipping, and discharging fluids, that may result from equipment failures and from events and conditions outside the nuclear power unit. However, dynamic effects associated with postulated pipe ruptures in nuclear power units may be excluded from the design basis when analyses reviewed and approved by the Commission demonstrate that the probability of fluid system piping rupture is extremely low under conditions consistent with the design basis for the piping.

3.1.1.4.1 Discussion

The safety-related SSCs are designed to accommodate the effects of, and to be compatible with, the environmental conditions associated with the normal operation, maintenance, testing, and postulated accidents, including LOCAs. Criteria are presented in Chapter 3, and the environmental conditions are described in Section 3.11.

These SSCs are adequately protected against dynamic effects, including the effects of missiles, pipe whipping, and discharging fluids, that may result from equipment failures and from events and conditions outside the nuclear power plant. Details of the design, environmental testing, and construction/fabrication of safety-related SSCs are provided in Chapters 3, 5, 6, 7, 8, 9, and 10. The leak-before-break (LBB) evaluation of Section 3.6 identifies the design requirements for the piping that is excluded from consideration of pipe rupture due to dynamic effects from postulated pipe failure accidents.

3.1.1.5 Criterion 5 – Sharing of Structures, Systems, and Components

> Structures, systems, and components important to safety shall not be shared among nuclear power units unless it can be shown that such sharing will not significantly impair their ability to perform their safety functions, including, in the event of an accident in one unit, an orderly shutdown and cooldown of the remaining unit.

3.1.1.5.1 Discussion

This design control document (DCD) focuses on the US-APWR as a single plant. Safety-related SSCs are not shared with other units/plants including other US-APWR unit(s).

3.1.2 Protection by Multiple Fission Product Barriers

3.1.2.1 Criterion 10 – Reactor Design

> The reactor core and associated coolant, control, and protection systems shall be designed with appropriate margin to assure that specified acceptable fuel design limits are not exceeded during any condition of normal operation, including the effects of anticipated operational occurrences.

3.1.2.1.1 Discussion

The reactor core and associated coolant, control, and protection systems are designed to the following criteria (anticipated operational occurrences [AOOs] for events occurring one or more times in a plant lifetime, and postulated accidents/occurrences that are not expected to occur:

- No fuel damage will occur during normal core operation or operational transients or any transient conditions that may occur one or more times in a plant lifetime (AOOs). Fuel damage, as used here, is defined as penetration of the fission product barrier (i.e., the fuel rod cladding). The small number of clad defects that may occur is within the capability of the plant cleanup system and is consistent with the plant design bases (see Section 11.1). The reactor can be returned to a safe-shutdown state following an anticipated operational occurrence with only a small fraction of the fuel rods damaged, although there might be sufficient fuel damage to preclude the immediate resumption of operation.

- The core will remain intact with acceptable heat transfer geometry following transients arising from occurrences of limiting faults (postulated accidents).

Reactor protection system setpoints are chosen conservatively to support the design margins. The reactor trip (RT) system is designed to actuate a RT whenever necessary to assure that the fuel design limits are not exceeded. The core design, together with the process and decay heat removal systems, provide this capability under all expected conditions of normal operation with appropriate margins for uncertainties and anticipated transient situations, including the effects of the loss of reactor coolant flow, a trip of the turbine generator, a loss of normal feedwater, and a loss of both normal and preferred power sources.

Chapter 4 discusses the design bases and design evaluation of core components including nuclear, thermal, and hydraulic design and evaluation. Details of the control and protection systems' instrumentation design and logic are discussed in Chapter 7. This information supports the accident analyses of Chapter 15, which show that the acceptable fuel design limits are not exceeded for AOOs, and adequate core cooling is available for postulated accidents/occurrences.

3.1.2.2 Criterion 11 – Reactor Inherent Protection

> The reactor core and associated coolant systems shall be designed so that in the power-operating range the net effect of the prompt inherent nuclear feedback characteristics tends to compensate for a rapid increase in reactivity.

3.1.2.2.1 Discussion

The reactor core is designed to have negative reactivity feedback characteristics associated with fuel and moderator temperature. When the reactor is critical, prompt compensatory reactivity feedback effects are assured by the negative fuel temperature effect (doppler effect), which compensates for a rapid uncontrolled reactivity increase. The negative doppler coefficient is assured by the inherent design, using low enrichment Uranium fuel. For slower reactivity transients, the negative moderator temperature coefficient (MTC) provides compensatory reactivity feedback to help control such transients. In order to have a negative MTC at power-operating condition, the boron concentration in the primary system is limited using burnable absorbers. The overall core design establishes a negative MTC.

Reactivity coefficients and their effects are discussed in Chapter 4.

3.1.2.3 Criterion 12 – Suppression of Reactor Power Oscillations

> The reactor core and associated coolant, control, and protection systems shall be designed to assure that power oscillations which can result in conditions exceeding specified acceptable fuel design limits are not possible or can be reliably and readily detected and suppressed.

3.1.2.3.1 Discussion

Total reactor power oscillations of the fundamental mode are inherently eliminated by negative Doppler and negative MTC.

Power distribution oscillations due to xenon spatial effects in the radial and azimuthal overtone modes are heavily damped due to the inherent design and due to the negative doppler and negative MTC.

Power distribution oscillations, due to xenon spatial effects may occur in the axial first overtone mode. Assurance that fuel design limits are not exceeded by axial xenon induced power oscillations is provided by RT functions, using the measured axial flux difference as an input.

If necessary to maintain axial flux difference within the limits of the Technical Specifications/Chapter 16 (i.e., flux difference that are alarmed to the operator and are within the flux difference trip setpoints), the operator can suppress axial xenon oscillations by control rod motions, and/or temporary power reductions.

Power distribution oscillations, due to xenon spatial effects in axial modes higher than the first overtone are heavily damped due to the inherent design and due to the negative Doppler coefficient of reactivity.

The stability of the core against xenon-induced power distribution oscillations and the functional requirements of instrumentation for monitoring are discussed in Chapter 4. Details of the instrumentation design and logic are discussed in Chapter 7.

3.1.2.4 Criterion 13 – Instrumentation and Control

> Instrumentation shall be provided to monitor variables and systems over their anticipated ranges for normal operation, for anticipated operational occurrences, and for accident conditions as appropriate to assure adequate safety, including those variables and systems that can affect the fission process, the integrity of the reactor core, the reactor coolant pressure boundary, and the containment and its associated systems. Appropriate controls shall be provided to maintain these variables and systems within prescribed operating ranges.

3.1.2.4.1 Discussion

Instrumentation and controls are provided to monitor and control neutron flux, control rod position, fluid temperatures, pressures, flows, and levels, to assure that adequate plant safety can be maintained. Instrumentation is provided in the reactor coolant system (RCS), steam and power conversion system, containment, engineered safety feature (ESF) systems, RWMS, and other auxiliary systems. Parameters that must be provided for operator use under normal operating and accident conditions are provided in proximity to the controls so that the operator can maintain the indicated parameters within their proper ranges. Chapter 18 describes the criteria for human factors engineering for the layout, displays, and controls of such parameters.

The quantity and types of process instrumentation provided assure the safe and orderly operation of all systems over the full design range of the plant. These systems are described in Chapters 6, 7, 8, 9, 10, 11, and 12.

3.1.2.5 Criterion 14 – Reactor Coolant Pressure Boundary

The reactor coolant pressure boundary shall be designed, fabricated, erected, and tested so as to have an extremely low probability of abnormal leakage, of rapidly propagating failure, and of gross rupture.

3.1.2.5.1 Discussion

The reactor coolant pressure boundary (RCPB) is designed, fabricated, erected, and tested in accordance with 10 CFR 50.55a (Reference 3.1-2) to provide a high degree of integrity throughout the plant life. Systems and components within the RCPB are classified as Quality Group A (Section 3.2 of this chapter). The design requirements, codes, and standards applied to this quality group help assure high integrity in keeping with the safety-related function.

The RCPB is designed to accommodate the system pressures and temperatures attained under the expected modes of plant operation, including anticipated transients, with stresses within applicable limits. Consideration is given to loadings under normal operating conditions and to abnormal loadings, such as seismic loadings, as discussed in this chapter. The piping is protected from overpressure by pressure-relieving devices, as required by the American Society of Mechanical Engineers (ASME) Code, Section III (Reference 3.1-5) (see Section 5.2).

RCPB materials and fabrication techniques are such that there is a low probability of gross rupture or significant leakage. The RCS design incorporates the LBB approach, which demonstrates that the probability of a fluid system pipe rupture is extremely low under conditions consistent with the design basis for the piping, and, therefore, reduces or eliminates the need to consider the dynamic effects of pipe breaks (see Section 3.6).

The reactor vessel (RV) material, construction techniques, chemical composition of forging material, and design, limit neutron fluence as discussed in Section 5.3, and Chapter 4. The “Discussion” for Criterion 31 (Subsection 3.1.4.2.1) provides additional information on the RCPB.

Coolant chemistry is controlled to protect the RCPB’s materials of fabrication from corrosion (see Section 5.2).

The RCPB welds are accessible for inservice inspections (ISI) to assess the structural and leak-tight integrity (see Section 5.2). For the RV, a material surveillance program conforming to applicable codes is provided (see Chapter 5, Section 5.3).

Instrumentation is provided to detect significant leakage from the RCPB with indication in the MCR (see Section 5.2).

3.1.2.6 Criterion 15 – Reactor Coolant System Design

The reactor coolant system and associated auxiliary, control, and protection systems shall be designed with sufficient margin to assure that the design conditions of the reactor coolant pressure boundary are not exceeded during any condition of normal operation, including anticipated operational occurrences.

3.1.2.6.1 Discussion

Steady state and transient analyses are performed to assure that RCS design conditions are not exceeded during normal operation. Protection and control setpoints are based on these analyses (see Chapter 15).

Additionally, RCPB components have a large margin of safety based on the application of proven materials and design codes, the use of proven fabrication techniques, the non-destructive shop testing, and the integrated hydrostatic testing of assembled components. The RCS stress analysis including the LBB analysis are described in Sections 3.9 and 3.6 of this document.

The effect of radiation embrittlement is considered in the RV design; as surveillance samples are monitored for adherence to expected conditions throughout plant life.

Multiple spring-loaded safety relief valves are provided for the RCS. The safety relief valves and their setpoints meet the ASME criteria for over-pressure protection. Use of the ASME criteria is satisfactory, based on a long history of industrial use. Chapter 5 discusses the RCS design.

3.1.2.7 Criterion 16 – Containment Design

The reactor containment and associated systems shall be provided to establish an essentially leak-tight barrier against the uncontrolled release of radioactivity to the environment and to assure that the containment design conditions important to safety are not exceeded for as long as postulated accident conditions require.

3.1.2.7.1 Discussion

The prestressed concrete containment vessel (PCCV) is composed of a pre-stressed post-tensioned concrete vessel, featuring a vertical cylinder, a hemispherical dome, and a flat reinforced concrete foundation. The PCCV is surrounded by the concrete reactor building (R/B). The steel-lined PCCV completely encloses the reactor, RCS, and other related systems. The lines that penetrate the containment vessel are provided with containment isolation valves according the provisions of GDCs 54, 55, 56, and 57. The steel-lined PCCV provides an essentially leak-tight barrier and provides environmental radiation protection under all postulated accident conditions, including a LOCA. The PCCV is designed to sustain, without loss of required integrity, the effects of LOCAs, up to and including, the double-ended rupture of the largest pipe in the RCS or double-ended rupture of a steam or feedwater pipe. For such events, ESFs comprising the emergency core cooling system (ECCS), containment systems, and containment

spray system (CSS) cool the reactor core and return the containment to near atmospheric pressure.

The containment structure and ESFs are designed to remove sufficient energy from the containment to prevent the containment from exceeding its design pressure and to assure the required functional capability of containing any uncontrolled release of radioactivity (including the surrounding annulus and emergency exhaust system).

See Chapters 3, 6, 9, and 15 for additional information.

3.1.2.8 Criterion 17 – Electrical Power Systems

An onsite electric power system and an offsite electric power system shall be provided to permit the functioning of structures, systems, and components important to safety. The safety function for each system (assuming that the other system is not functioning) shall be to provide sufficient capacity and capability to assure that (1) specified acceptable fuel design limits and design conditions of the reactor coolant pressure boundary are not exceeded as a result of anticipated operational occurrences and (2) the core is cooled and containment integrity and other vital functions are maintained in the event of postulated accidents.

The onsite electric power supplies, including the batteries, and the onsite electric distribution system, shall have sufficient independence, redundancy, and testability to perform their safety functions, assuming a single failure.

Electric power from the transmission network to the onsite electric distribution system shall be supplied by two physically independent circuits (not necessarily on separate rights-of-way) designed and located so as to minimize, to the extent practical, the likelihood of their simultaneous failure under operating and postulated accident and environmental conditions. A switchyard common to both circuits is acceptable. Each of these circuits shall be designed to be available in sufficient time, following the loss of all onsite alternating current power supplies and the offsite electric power circuit, to assure that specified acceptable fuel design limits and design conditions of the reactor coolant pressure boundary are not exceeded. One of these circuits shall be designed to be available within a few seconds following a LOCA to assure that core cooling, containment integrity, and other vital safety functions are maintained.

Provisions shall be included to minimize the probability of losing electric power from any of the remaining supplies as a result of, or coincident with, the loss of power generated by the nuclear power unit, the loss of power from the transmission network, or the loss of power from the onsite electric power supplies.

3.1.2.8.1 Discussion

An onsite electric power system and an offsite electric power system are provided to permit the functioning of safety-related SSCs. As discussed in Chapter 8, each Class 1E (safety) electric power system is designed with adequate independence, capacity, redundancy, and testability to assure the functioning of the corresponding ESFs. Independence is provided by physical separation and electrical isolation of components and cables.

The onsite electric power system is supplied from two offsite transmission systems, which are physically separated. All plant loads are supplied normal power through the main transformer and four unit auxiliary transformers, or with alternate power through the reserve auxiliary transformers. The onsite electric power system consists of Class 1E (safety) electrical systems and non-safety electrical systems. The Class 1E ac power system is the power source used in (or associated with) shutting down the reactor and preventing or limiting the release of radioactive material following a design basis event. The Class 1E electrical distribution system is divided into four independent distribution power systems/trains: Train A, Train B, Train C, and Train D. Each train is fed from an independent Class 1E bus. Each train consists of: 6.9 kV, 480 V, 120 Vac, and 125 V dc distribution systems.

Each Class 1E bus is provided with two (normal and alternate) offsite preferred power sources, an emergency power source (EPS), and a diverse non-safety alternative alternating current (ac) power source, which are manually connected in the event of station blackout. This direct connection is performed under manual administrative controls.

The Class 1E ac power system distributes power to all safety-related loads. Also, certain selected loads that are not safety-related but are important to the plant operation are supplied with power from the alternative ac power source.

The reserve auxiliary transformer supplies normal preferred (offsite) power to the Class 1E ac system. Each reserve auxiliary transformer has the capacity to supply all connected running loads. The unit auxiliary transformers may also supply alternate preferred (offsite) power to all connected running loads. The capacity of the unit auxiliary transformer is the same as that of the reserve auxiliary transformer.

A failure of a single component will not prevent the safety-related systems from performing their function. Each of the connected preferred offsite power circuits is designed to be available in sufficient time, following a loss of all onsite power sources and the other offsite electric power circuit, to assure that the specified acceptable fuel design limits and design conditions of the RCPB are not exceeded.

Emergency onsite ac power is furnished by four EPSs. Each EPS is connected to a Class 1E bus. The ESF loads are divided between the Class 1E, 6.9 kV buses in redundant load groupings. Each EPS is capable of supplying sufficient power in sufficient time for the operation of the ESF required for the plant during a concurrent design basis accident (DBA) and a loss of offsite power. During a postulated LOCA, four EPSs start automatically. If the preferred power is available to the Class 1E bus following a LOCA, the ESF loads will be started sequentially. However, in the event that

the preferred power is lost, all motor loads connected to a Class 1E bus will be shed, and the ESF equipment will be sequentially started.

The US-APWR design basis allows on-line maintenance of each of the four EPSs. The four train safety system loads are connected with each train bus. There are also some two train safety systems loads. These two train safety system loads are connected to buses that can be powered from either of two power sources. During maintenance of an EPS, the two train loads are manually switched to the alternate train feeder.

The EPSs are arranged so that a failure of a single component will not prevent the safe-shutdown of the reactor. The onsite Class 1E dc power supply consists of four independent battery systems. The failure of a single component in the dc power supply will not impair the function of the ESFs required to maintain the reactor in a safe condition.

See Chapter 8 for details and Chapter 15 for additional information.

3.1.2.9 Criterion 18 – Inspection and Testing of Electric Power Systems

> Electric power systems important to safety shall be designed to permit appropriate periodic inspection and testing of important areas and features, such as wiring, insulation, connections, and switchboards, to assess the continuity of the systems and the condition of their components. The systems shall be designed with a capability to test periodically (1) the operability and functional performance of the components of the systems, such as onsite power sources, relays, switches, and buses, and (2) the operability of the systems as a whole and, under conditions as close to design as practical, the full operation sequence that brings the systems into operation, including operation of applicable portions of the protection system, and the transfer of power among the nuclear power unit, the offsite power system, and the onsite power system.

3.1.2.9.1 Discussion

Class 1E electric power systems are designed so that the following aspects of the system can be periodically tested:

- The operability and functional performance of the components of Class 1E electric power systems (EPSs, ESF buses, and dc system).
- The operability of these electric power systems as a whole and under conditions as close to design as practical, including the full operational sequence that actuates these systems.

The 6.9 kv and 480 V circuit breakers and the associated equipment will be tested one at a time, only while redundant equipment is operational.

The dc system is provided with detectors to indicate and alarm when there is a ground existing on any part of the system. During plant operation, normal maintenance may be performed.

Provisions for the testing of the Class 1E ac power system, the Class 1E dc power system, and the standby safety power supplies are described in Chapter 8 and in the Technical Specifications/Chapter 16.

3.1.2.10 Criterion 19 – Control Room

> A control room shall be provided from which actions can be taken to operate the nuclear power unit safely under normal conditions and to maintain it in a safe condition under accident conditions, including LOCAs. Adequate radiation protection shall be provided to permit access and occupancy of the control room under accident conditions without personnel receiving radiation exposures in excess of 5 rem whole body, or its equivalent, to any part of the body, for the duration of the accident.
>
> Equipment at appropriate locations outside the control room shall be provided (1) with a design capability for prompt hot shutdown of the reactor, including necessary instrumentation and controls to maintain the unit in a safe condition during hot shutdown and (2) with a potential capability for subsequent cold shutdown of the reactor through the use of suitable procedures.

3.1.2.10.1 Discussion

A MCR is provided for the control of the US-APWR plant, from which actions can be taken to operate the plant safely under normal conditions and to maintain it in a safe manner under accident conditions, including LOCAs. Operator action outside of the MCR to mitigate the consequences of an accident is permitted. The MCR and its post-accident ventilation systems are designed to satisfy seismic Category I requirements. Adequate concrete shielding and radiation protection are provided against direct gamma radiation and inhalation doses resulting from a postulated release of fission products inside the PCCV based on the assumptions contained in RG 1.183 (Reference 3.1-6). The shielding and the MCR habitability system allow access to, and occupancy of, the MCR under accident conditions without personnel receiving radiation exposures in excess of 5 rem (total effective dose equivalent) for the duration of the accident (see Chapter 6, Section 6.4, and Chapter 15). Fission product removal is provided in the MCR recirculation equipment to remove iodine and particulate matter, thereby minimizing the dose due to iodine that could result from the accident. The MCR habitability features are described in Chapter 6, Section 6.4.

In the event that the operators are forced to abandon the MCR, the remote shutdown console located outside the control room fire zone, provides safe-shutdown capability (to achieve and maintain the plant in a safe-shutdown condition or cold shutdown) through the four trains, protection and safety monitoring system (PSMS), and the safety-related human-system interface system.

See Chapter 7 for additional information.

3.1.3 Protection and Reactivity Control Systems

3.1.3.1 Criterion 20 – Protection System Functions

The protection system shall be designed (1) to initiate automatically the operation of appropriate systems, including the reactivity control systems, to assure that specified acceptable fuel design limits are not exceeded as a result of anticipated operational occurrences and (2) to sense accident conditions and to initiate the operation of systems and components important to safety.

3.1.3.1.1 Discussion

The PSMS includes the reactor protection system (RPS), the engineered safety features actuation system (ESFAS), and the safety logic system (SLS). The RPS receives process signals from safety-related sensors and performs bi-stable calculations for potential RT and ESF actuation. The RPS performs two-out-of-four voting logic for like sensors coincidence to actuate trip signals to RT switchgears and actuate ESF signals to the ESFAS. Setpoints are designed to provide an envelope of safe operating conditions with adequate margin for uncertainties to assure that the fuel design limits are not exceeded.

RT is initiated by removing power to the control rod drive mechanisms (CRDMs) of all rod cluster control assemblies (RCCAs). This causes the rods to be inserted by gravity, thus, rapidly reducing the reactor power. The response and adequacy of the protection system has been verified by analysis of anticipated transients.

The ESFAS receives output of the ESF actuation signals from the RPS and manual system level actuation signals. The occurrence of a limiting fault (e.g., LOCA) requires a RT plus actuation of one or more ESFs in order to prevent or mitigate damage to the core and RCS, and to assure containment integrity.

Upon approaching reactor design-set conditions, RPS is initiated automatically such that specified acceptable fuel design limits are not encroached as a result of AOOs. Upon sensing conditions of AOOs or postulated accidents, ESFAS automatically initiates operation of systems and components required to mitigate anticipated operations or postulated accident conditions.

The SLS also receives manual component level control signals. This system performs the component level control logic for safety actuators.

See Chapters 7 and 15 for additional information.

3.1.3.2 Criterion 21 – Protection System Reliability and Testability

The protection system shall be designed for high functional reliability and inservice testability commensurate with the safety functions to be performed. Redundancy and independence designed into the protection system shall be sufficient to assure that (1) no single failure results in the loss of the protection function and (2) removal from service of any component or channel does not result in the loss of the required minimum

redundancy unless the acceptable reliability of operation of the protection system can be otherwise demonstrated. The protection system shall be designed to permit periodic testing of its functioning when the reactor is in operation, including a capability to test channels independently to determine failures and losses of redundancy that may have occurred.

3.1.3.2.1 Discussion

The protection system is designed for functional reliability and inservice testability. The design employs redundant trains, measurement, and equipment diversity.

The PSMSs have the requisite redundancy to satisfy the single failure criterion during normal operation and during all planned-on-line test/maintenance configurations. Physical separation and electrical isolation are provided between redundant subsystems. All equipment within the PSMS satisfies all general requirements such as, environmental, seismic, testability, etc. The configuration of the four trains with two-out-of-four voting logic is provided from sensors to trip breakers in the RPS. The configuration of four trains with two-out-of-four voting logic is also provided in the ESFAS. In addition to train redundancy, the central processing unit and the safety bus are also redundant within each train.

To prevent a disturbance of the plant caused by the failure of the instrumentation and control system, a redundant configuration is applied to all subsystems that may directly result in spurious plant trips or a spurious system level ESF actuation. Failed components detected by the self-diagnostic features automatically switch the system to redundant stand-by components. Consequences due to transients generated either by spurious plant trip and/or by spurious ESF actuations are bounded by Chapter 15 analysis.

The safety system may be placed in bypass mode to allow for testing and maintenance while the plant is on-line. During this bypass mode, a single failure in the safety system will not result in a spurious plant trip or a system level ESF actuation. Automatic bypass management logic continuously checks for multiple bypassed conditions to assure that the minimum redundancy required by the Technical Specifications/Chapter 16 is always maintained.

This equipment includes automated testing with a high degree of coverage, and additional overlapping manual test features for those areas not covered by automated tests. Most manual tests may be conducted with the plant on-line, and with the equipment bypassed or out of service. Equipment that cannot be tested with the plant on-line can be tested during shutdown.

The instrumentation and control systems are described in Chapter 7. System operability and surveillance requirements are discussed in the Technical Specifications/Chapter 16.

3.1.3.3 Criterion 22 – Protection System Independence

The protection system shall be designed to assure that the effects of natural phenomena, and of normal operating, maintenance, testing, and postulated accident conditions on redundant channels do not result in the loss of the protection function or shall be demonstrated to be acceptable

on some other defined basis. Design techniques, such as functional diversity or diversity in component design and principles of operation, shall be used to the extent practical to prevent loss of the protection function.

3.1.3.3.1 Discussion

The design of the protection systems includes the consideration of natural phenomena, normal maintenance, testing, and accident conditions so that the protection functions are always available.

The protection system components are designed, arranged, and qualified for operation in the environmental conditions arising from any emergency situation for which the components are required to function.

Functional diversity has been designed into the system. The extent of this functional diversity has been evaluated for a variety of postulated accidents. Diverse protection functions will automatically terminate an accident before unacceptable consequences can occur.

Sufficient redundancy and independence are designed into the protection systems to assure that no single failure or removal from service of any component or channel of a system would result in a loss of the protection function. Functional diversity and consequential location diversity are designed into the system. Automatic RTs are based upon neutron flux measurements, reactor coolant loop temperature measurements, pressurizer pressure and level measurements, reactor coolant pump flow and speed, steam generator (SG) water level, and turbine trip signal. Trips may also be initiated manually or by an ECCS actuation signal. See Chapter 7 for additional details.

High quality components, conservative design, applicable quality control, inspection, calibration, and tests are utilized to guard against common-mode failure. Qualification testing and analysis are performed on the various safety-related systems to demonstrate functional operation at normal and post-accident conditions of temperature, humidity, pressure, and radiation for specified periods, if required. Typical protection system equipment is subjected to type tests under simulated seismic conditions, using conservatively large accelerations at the applicable frequencies. The test results indicate no loss of the protection function.

Refer to the discussions in Sections 3.10 and 3.11 for further details.

3.1.3.4 Criterion 23 – Protection System Failure Modes

The protection system shall be designed to fail into a safe state or into a state demonstrated to be acceptable on some other defined basis if conditions such as disconnection of the system, loss of energy (e.g., electric power, instrument air) or postulated adverse environments (e.g., extreme heat or cold, fire, pressure, steam, water, and radiation) are experienced.

3.1.3.4.1 Discussion

The protection system is designed with consideration of the most probable failure modes of the components under various perturbations of the environment and energy sources. The RT functions are designed to fail to an actuated trip state (de-energize-to-trip principle) on the loss of all power, failures that are not automatically detected, or failures that are automatically detected and would prevent the proper execution of the trip function. The ESF functions are designed to fail to an un-actuated state. The un-actuated state avoids spurious plant transients and is, therefore, a safe state.

For a more detailed description of the protection system, see Chapter 7.

3.1.3.5 Criterion 24 – Separation of Protection and Control Systems

> The protection system shall be separated from the control systems to the extent that failure of any single control system component or channel, or failure or removal from service of any single protection system component or channel which is common to the control and protection systems, leaves intact a system satisfying all reliability, redundancy, and independence requirements of the protection system. Interconnection of the protection and control systems shall be limited so as to assure that safety is not significantly impaired.

3.1.3.5.1 Discussion

Redundant divisions of the protection systems are physically and electrically isolated from the non-safety control systems. Isolation devices provide assurance that, where protection signals are used by non-safety systems, and non-safety signals are used by safety systems, credible single failures in the non-safety system will not degrade the performance of the safety system. In addition to the electrical and physical isolations, functional isolation between non-safety systems and safety systems is provided. The functional isolation is provided by priority logics in the safety systems, or by signal selector logic in the non-safety systems. The priority logics assures that safety actuation signals, both automatic and manual (system level and component level), override all control signals from the non-safety systems. Signal selection logic in the control system prevents erroneous control actions due to single sensor failures. Eliminating these erroneous control actions prevents challenges to the protection system while it is degraded due to the same sensor failure.

The adequacy of the system isolation capability has been verified by testing under conditions of postulated credible faults. The failure of any single control system component or channel, or the failure or removal from service of any single protection system component or channel, which is common to the control and protection system, leaves intact a system that satisfies the requirements of the protection system.

3.1.3.6 Criterion 25 – Protection System Requirements for Reactivity Control Malfunctions

> The protection system shall be designed to assure that specified acceptable fuel design limits are not exceeded for any single malfunction

of the reactivity control systems, such as accidental withdrawal (not ejection or dropout) of the control rods.

3.1.3.6.1 Discussion

The protection system is designed to limit reactivity transients so that the fuel design limits are not exceeded. Reactor shutdown by control rod insertion is completely independent of the normal control function, since the trip breakers interrupt power to the rod mechanisms regardless of existing control signals. Thus, in the postulated accidental withdrawal of a control rod or control rod bank (assumed to be initiated by a control malfunction), neutron flux, temperature, pressure, level, and flow signals would be generated independently. Any of these signals (trip demands) would operate the breakers to trip the reactor.

Analyses of the effects of possible malfunctions are discussed in Section 15.4. These analyses show that for postulated boron dilution during refueling, startup, or manual or automatic operation at power, the operator has ample time to determine the cause of the dilution, terminate the source of the dilution, and initiate re-boration before the shutdown margin is lost. The analyses show that acceptable fuel damage limits are not exceeded even in the event of a single malfunction of either system.

3.1.3.7 Criterion 26 – Reactivity Control System Redundancy and Capability

Two independent reactivity control systems of different design principles shall be provided. One of the systems shall use control rods, preferably including a positive means for inserting the rods, and shall be capable of reliably controlling reactivity changes to assure that under conditions of normal operation, including anticipated operational occurrences, and with appropriate margin for malfunctions such as stuck rods, specified acceptable fuel design limits are not exceeded. The second reactivity control system shall be capable of reliably controlling the rate of reactivity changes resulting from planned, normal power changes (including xenon burnout) to assure that the acceptable fuel design limits are not exceeded. One of the systems shall be capable of holding the reactor core subcritical under cold conditions.

3.1.3.7.1 Discussion

Two reactivity control systems are provided. These are the RCCAs and chemical shim (boric acid). The RCCAs are inserted into the core by the force of gravity.

During operation, the shutdown rod banks are fully withdrawn. The control rod system automatically maintains a programmed average reactor temperature compensating for reactivity effects associated with scheduled and transient load changes. The shutdown rod banks, along with the control rod banks, are designed to shut down the reactor with adequate margin under conditions of normal operation and AOOs, thereby ensuring that specified fuel design limits are not exceeded. The most restrictive period in the core life is assumed in all analyses, and the most reactive RCCA is assumed to be in the fully withdrawn position.

The boron system maintains the reactor in the cold shutdown state and can compensate for xenon burnout transients.

Details of the fabrication of the RCCAs are presented in Chapter 4, and their control system is discussed in Chapter 7. The means of controlling the boric acid concentration is described in Chapter 9. Performance analyses under accident conditions are included in Chapter 15.

3.1.3.8 Criterion 27 – Combined Reactivity Control Systems Capability

> The reactivity control systems shall be designed to have a combined capability, in conjunction with poison addition by the emergency core cooling system, of reliably controlling reactivity changes to assure that under postulated accident conditions and with appropriate margin for stuck rods the capability to cool the core is maintained.

3.1.3.8.1 Discussion

The facility is provided with the means of making and holding the core subcritical under any anticipated condition and with appropriate margin for contingencies. These means are discussed in detail in Chapters 4, 7, and 9. The transient analysis in Chapter 15 show that the reactivity changes are controlled during AOOs and postulated accidents. The combined use of the rod cluster control system and the chemical shim control system permits the necessary shutdown margin to be maintained during long-term xenon decay and plant cooldown. The single highest worth RCCA is assumed to be stuck full out upon trip for this determination.

3.1.3.9 Criterion 28 – Reactivity Limits

> The reactivity control systems shall be designed with appropriate limits on the potential amount and rate of reactivity increase to assure that the effects of postulated reactivity accidents can neither (1) result in damage to the reactor coolant pressure boundary greater than limited local yielding nor (2) sufficiently disturb the core, its support structures, or other reactor pressure vessel internals to impair significantly the capability to cool the core. These postulated reactivity accidents shall include consideration of rod ejection (unless prevented by positive means), rod dropout, steam line rupture, changes in reactor coolant temperature and pressure, and cold water addition.

3.1.3.9.1 Discussion

The maximum reactivity worth of the control rods and the maximum rates of reactivity insertion employing control rods and boron removal are limited by design and procedures. These values prevent any reactivity increase from rupturing the RCS boundary or disrupting the core or vessel internals to a degree that could impair the effectiveness of emergency core cooling.

The appropriate reactivity insertion rate for the withdrawal of RCCAs and the dilution of the boric acid in the RCS is limited by design and procedures. The RPS and ESFAS provide protection for such events as a rod ejection accident and steam line break.

Protection system setpoints, control bank alignment, insertion limits, and shutdown margin requirements are contained in the Technical Specifications/Chapter 16. The reactivity insertion rates, dilution, and withdrawal limits are discussed in Chapter 4. The capability of the chemical and volume control system (CVCS) to avoid an inadvertent excessive rate of boron dilution is discussed in Chapter 9. The relationship of the reactivity insertion rates to plant safety is discussed in Section 15.4.

Core cooling capability following accidents, such as rod ejection, steam line break, etc., is assured by keeping the RCPB within faulted condition limits, as specified by applicable ASME codes. Structural deformations are also checked and limited to values that do not jeopardize the operation of needed safety-related features.

3.1.3.10 Criterion 29 – Protection against Anticipated Operational Occurrences

> The protection and reactivity control systems shall be designed to assure an extremely high probability of accomplishing their safety functions in the event of anticipated operational occurrences.

3.1.3.10.1 Discussion

The protection and reactivity control systems have an extremely high probability of performing their required safety-related functions in any AOOs. Diversity, independence, and redundancy, coupled with a QAP and analyses, support this probability. Failure modes of the system components are designed to be safe modes. A loss of power to the protection system results in a RT. The details of system design are covered in Chapters 4 and 7.

3.1.4 Fluid Systems

3.1.4.1 Criterion 30 – Quality of Reactor Coolant Pressure Boundary

> Components which are part of the reactor coolant pressure boundary shall be designed, fabricated, erected, and tested to the highest quality standards practical. Means shall be provided for detecting and, to the extent practical, identifying the location of the source of reactor coolant leakage.

3.1.4.1.1 Discussion

The RCPB components of the US-APWR are consistent with 10 CFR 50.2 and 10 CFR 50.55a (Reference 3.1-2).

Section 3.2 provides the classification of the RCPB components and attached systems and components, which are accorded all the quality measures appropriate to these classifications. The design bases and evaluations of the RCS are discussed in Chapter 5.

A number of methods are available for detecting reactor coolant leakage. The RV closure joint is provided with a temperature-monitored leak-off between double gaskets. Leakage inside the PCCV is drained to the sumps, where the level is monitored. Leakage is also detected by measuring the air-borne activity and gaseous radioactivity

of the PCCV and condensate flow rate from the air coolers. Refer to Chapter 5 for a complete description of the RCPB leakage detection system. Technical Specifications/Chapter 16 limit pressure boundary, identified and unidentified leakage, and requires RCS leakage detection instrumentation to be operable in certain modes.

3.1.4.2 Criterion 31 – Fracture Prevention of Reactor Coolant Pressure Boundary

The reactor coolant pressure boundary shall be designed with sufficient margin to assure that when stressed under operating, maintenance, testing, and postulated accident conditions (1) the boundary behaves in a nonbrittle manner and (2) the probability of rapidly propagating fracture is minimized. The design shall reflect consideration of service temperatures and other conditions of the boundary material under operating, maintenance, testing, and postulated accident conditions and the uncertainties in determining (1) material properties, (2) the effects of irradiation on material properties, (3) residual, steady state, and transient stresses, and (4) size of flaws.

3.1.4.2.1 Discussion

The RCPB is designed, maintained, and tested to provide adequate assurance that the boundary behaves in a non-brittle manner and the probability of a rapidly propagating fracture is minimized throughout the life of the plant. Close control is maintained over material selection and fabrication for the RCPB to assure that the boundary behaves in a nonbrittle manner. The RCPB materials, which are exposed to the coolant, are corrosion-resistant stainless steel or nickel-based alloys. The nil-ductility transition reference temperature (RT_{NDT}) of the RV structural steel is established by Charpy V-notch and drop weight tests in accordance with 10 CFR 50, Appendix G (Reference 3.1-7), “Fracture Toughness Requirements.”

The following requirements are imposed on the RV, in addition to those specified by the ASME Code.

- In the surveillance programs, the evaluation of the radiation damage is based on pre-irradiation testing of Charpy V-notch and tensile specimens, and post irradiation testing of Charpy V-notch, tensile, and 1/2 T compact tension specimens. These programs are directed toward the evaluation of the effect of radiation on the fracture toughness of RV steels based on the reference transition temperature approach and the fracture mechanics approach, and are in accordance with American Society of Testing and Materials (ASTM) E-185-82 (Reference 3.1-8) Standard Practice for Conducting Surveillance Tests for Light-Water Cooled Nuclear Power Reactor Vessels, and the requirements of 10 CFR 50, Appendix H, Reactor Vessel Material Surveillance Program Requirements (Reference 3.1-9).

- RV core region material chemistry is controlled to reduce sensitivity to embrittlement due to irradiation over the life of the plant.

The fabrication and quality control techniques used in the fabrication of the RCS are equivalent to those used for the RV. The inspections of RV, pressurizer, piping, pumps, and SGs are governed by ASME Code requirements.

Allowable pressure-temperature relationships for plant heatup and cooldown rates are calculated, using methods derived from “Protection Against Non Ductile Failure” , ASME Code, Section III, Appendix G, (Reference 3.1-10). The approach specifies that the allowable stress intensity factors for all vessel-operating conditions do not exceed the reference stress intensity factor for the metal temperature at any time. Operating specifications include conservative margins for predicted changes in the material reference temperatures (RT_{NDT}) due to irradiation.

Refer to Chapter 5 for additional details.

3.1.4.3 Criterion 32 – Inspection of Reactor Coolant Pressure Boundary

> Components which are part of the reactor coolant pressure boundary shall be designed to permit (1) periodic inspection and testing of important areas and features to assess their structural and leak-tight integrity and (2) an appropriate material surveillance program for the reactor pressure vessel.

3.1.4.3.1 Discussion

The design of the RCPB provides accessibility to the internal surfaces of the RV and most external zones of the vessel, including the nozzle to the reactor coolant piping welds, the top and bottom heads, and external surfaces of the reactor coolant piping, except for the area of pipe within the primary shielding concrete and within the reactor coolant piping support area. The inspection capability complements the Leakage Detection System in assessing the integrity of the pressure boundary components. The RCPB will be periodically inspected under the provisions of the ASME Code, Section XI (Reference 3.1-11).

RV material surveillance samples are located within the RV. These samples are used to monitor changes in the fracture toughness properties of the RV core region, forgings, weldments, and associated heat-treated zones, which is performed in accordance with 10 CFR 50, Appendix H (Reference 3.1-9).

The material properties surveillance program includes not only the conventional tensile and impact tests, but also fracture mechanics specimens. The observed shifts in RT_{NDT} of the core region materials with irradiation will be used to confirm the allowable limits calculated for operational transients.

The design of the RCPB piping provides for accessibility of all welds requiring ISI under the provisions of the ASME Code, Section XI (Reference 3.1-11). Removable insulation is provided at all welds requiring ISI.

Refer to Section 3.9 and Chapters 5 for additional information.

3.1.4.4 Criterion 33 – Reactor Coolant Makeup

A system to supply reactor coolant makeup for protection against small breaks in the reactor coolant pressure boundary shall be provided. The system safety function shall be to assure that specified acceptable fuel design limits are not exceeded as a result of reactor coolant loss due to leakage from the reactor coolant pressure boundary and rupture of small piping or other small components, which are part of the boundary. The system shall be designed to assure that for onsite electric power system operation (assuming offsite power is not available) and for offsite electric power system operation (assuming onsite power is not available) the system safety function can be accomplished using the piping, pumps, and valves used to maintain coolant inventory during normal reactor operation.

3.1.4.4.1 Discussion

The CVCS provides the normal means of reactor coolant makeup and adjustment of the boric acid concentration. Makeup is added automatically if the level in the Volume Control Tank falls below a preset level. Centrifugal charging pumps (CCPs) are used as the normal means of reactor coolant makeup. The pumps are powered from the non-safety bus.

The CCPs are capable of supplying the required makeup and reactor coolant seal injection flow when power is available from the non-safety bus. Functional reliability is assured by provision of standby components assuring a safe response to probable modes of failure.

The emergency letdown system (ELS) consists of two emergency letdown lines from the RCS hot legs to the refueling water storage pit (RWSP). In the event that the normal CVCS letdown and boration capability is not available, the feed and bleed emergency letdown and boration operation can be utilized to achieve a cold shutdown boration level in the reactor coolant. The emergency letdown directs reactor coolant to the RWSP. The safety injection pumps (SIPs) provide borated coolant to the RCS from the RWSP. The SIPs are powered from a safety 1E bus so they can be supplied power from either the Offsite or Onsite Electric Power Systems.

Details of the system design, including the descriptions of the effects of small piping and component ruptures, are provided in Chapters 6, 9, and 15, and details of the electric power system are included in Chapter 8.

3.1.4.5 Criterion 34 – Residual Heat Removal

A system to remove residual heat shall be provided. The system safety function shall be to transfer fission product decay heat and other residual heat from the reactor core at a rate such that specified acceptable fuel design limits and the design conditions of the reactor coolant pressure boundary are not exceeded.

Suitable redundancy in components and features and suitable interconnections, leak detection, and isolation capabilities shall be

provided to assure that for onsite electric power system operation (assuming offsite power is not available) and for offsite electric power system operation (assuming onsite power is not available) the system safety function can be accomplished, assuming a single failure. II

3.1.4.5.1 Discussion

The containment spray/residual heat removal system (CS/RHRS), in conjunction with the steam and power conversion system, and the ECCS, are designed to transfer the fission product decay heat and other residual heat from the reactor core at a rate that keeps the fuel within acceptable limits for normal operations and accident conditions. The CS/RHRS functions when temperature and pressure are below approximately 350°F and 400 psig, respectively.

Redundancy of the CS/RHRS is provided by four independent subsystems with each subsystem containing a CS/residual heat removal (RHR) pump (located in separate compartments, with means available for draining and monitoring leakage), and a CS/RHR heat exchanger, and associated piping, cabling, and electric power sources. The CS/RHR pumps receive power from corresponding safety buses. The CS/RHRS is able to operate from either the onsite or offsite electrical power sources.

Redundancy of heat removal at temperatures above approximately 350°F is provided by the four SGs, the corresponding main steam relief valves, and the Emergency Feedwater System.

The ECCS, which includes the accumulators and high-head injection system (HHIS), cools the reactor core, provides negative reactivity, prevents fuel and cladding damage, and limits the zirconium-water reaction of the fuel cladding to a very small amount. The ECCS is designed with sufficient redundancy (four trains) to accomplish the safety-related functions. The SIPs are located in separate compartments, with means available for draining and monitoring leakage. The essential components of the ECCS receive power from corresponding safety buses and therefore are able to operate from either the onsite or offsite electrical power sources.

Details of the system design and related accident analysis are provided in Chapters 5, 6, 10, and 15. Details of the electric power systems are included in Chapter 8.

3.1.4.6 Criterion 35 – Emergency Core Cooling

A system to provide abundant emergency core cooling shall be provided. The system safety function shall be to transfer heat from the reactor core following any loss of reactor coolant at a rate such that (1) fuel and clad damage that could interfere with continued effective core cooling is prevented and (2) clad metal-water reaction is limited to negligible amounts.

Suitable redundancy in components and features and suitable interconnections, leak detection, isolation, and containment capabilities shall be provided to assure that for onsite electric power system operation (assuming off site power is not available) and for offsite electric power

system operation (assuming onsite power is not available) the system safety function can be accomplished, assuming a single failure.

3.1.4.6.1 Discussion

The ECCS of the US-APWR includes the accumulator system, HHIS and ELS. The ECCS has the capability to mitigate the effects of any LOCA within the design bases. Cooling water is provided in an emergency to transfer heat from the core at a rate sufficient to maintain the core in a coolable geometry and to assure that clad metal-water reaction is limited to less than 1%. Design provisions assure performance of the required safety functions even with a postulated single failure.

Emergency core cooling is provided even if there is a failure of any component in the system. A passive system of four accumulators, one for each RCS loop, do not require any external signals or sources of power to operate, and provide the short-term cooling requirements for breaks in the large reactor coolant pipe systems. An independent and redundant pumping system is provided by the HHIS. The HHIS consists of four independent trains, each train contains a SIP and the associated valves, and piping. One of four independent safety electrical buses is available to each SIP. The SIPs are aligned to take suction from the RWSP that is inside containment to deliver borated water to the safety injection (SI) nozzles on the RV for short-term cooling and to the hot legs and downcomer for long-term cooling. Two SI trains are capable of meeting the design cooling function for a large LOCA assuming single failure in one train with another train out of service for maintenance.

The Discussion section of GDC 33 describes the ELS, the system's flow path, and boration capability via the SIPs, which are supplied power from the safety bus from either the offsite or onsite sources, as needed.

These systems are arranged so that a single failure of any active component does not interfere with meeting the short- term cooling requirements.

Additionally, the ECCS is designed with sufficient redundancy (four trains) to accomplish its safety functions assuming a single failure of an active component or a passive component in the long term following an accident with one train out of service for maintenance.

The primary function of the ECCS is to deliver borated cooling water to the reactor core in the event of a LOCA. This limits the fuel-clad temperature; assures that the core will remain intact and in place, with its essential heat transfer geometry preserved; and prevents a return to criticality. This protection is provided for the following events:

- All pipe breaks sizes up to and including the hypothetical circumferential rupture of the largest pipe of a reactor coolant loop
- A LOCA associated with a rod ejection

The ECCS is described in Chapter 6. The LOCA, including an evaluation of consequences, is discussed in Chapter 15. Details of the electric power system are described in Chapter 8.

3.1.4.7 Criterion 36 – Inspection of Emergency Core Cooling System

The emergency core cooling system shall be designed to permit appropriate periodic inspection of important components, such as spray rings in the reactor pressure vessel, water injection nozzles, and piping, to assure the integrity and capability of the system.

3.1.4.7.1 Discussion

The ECCS is accessible for visual inspection and for nondestructive ISI, to satisfy the ASME Code, Section XI (Reference 3.1-11).

The piping, components, accumulators and the RWSP are designed to permit access for periodic inspection and testing to confirm the integrity and capability of the system.

Components outside the containment are accessible for leak-tightness inspection during operation of the reactor.

Details of the inspection program for the ECCS are discussed in Section 6.3, the Inservice Inspection Program, and the Technical Specifications/Chapter 16.

3.1.4.8 Criterion 37 – Testing of Emergency Core Cooling System

The emergency core cooling system shall be designed to permit appropriate periodic pressure and functional testing to assure (1) the structural and leak-tight integrity of its components, (2) the operability and performance of the active components of the system, and (3) the operability of the system as a whole and under conditions as close to design as practical, the performance of the full operational sequence that brings the system into operation, including operation of applicable portions of the protection system, the transfer between normal and emergency power sources, and the operation of the associated cooling water system.

3.1.4.8.1 Discussion

The design of the ECCS permits periodic testing of both active and passive components of the ECCS.

Preoperational performance tests of the ECCS components are performed by the manufacturer. Initial system hydrostatic and functional flow tests demonstrate structural and leak-tight integrity of components and proper functioning of the system. Thereafter, periodic tests demonstrate that components are functioning properly.

Each active component of the ECCS may be individually operated on the normal power source or transferred to standby power sources at any time during normal plant operation to demonstrate operability. The test of the SIPs, employs a minimum flow line that connects back to the RWSP that may be used during normal operation. Full flow test may be performed during plant shutdown. The pump rooms contain leakage detection, which triggers an alarms in the MCR. Remote-operated valves are exercised and actuation circuits tested. The automatic actuation circuitry, valves, and pump

breakers may be checked during integrated system tests performed during a planned cooldown of the RCS.

Design provisions include special instrumentation, testing, and sampling lines used to perform the tests during plant shutdown to demonstrate proper automatic operation of the ECCS. (Refer to Chapter 1, Section 1.9, for a discussion of RG 1.22 [Reference 3.1-12].) A test signal is applied to initiate automatic action, and verification is performed to confirm that the SIPs attain the required discharge head. This test demonstrates the operation of the valves, pump circuit breakers, and automatic circuitry. In addition, the periodic recirculation to the RWSP can verify the ECCS delivery capability. This recirculation test includes all but the last valve, which connects to the reactor coolant piping.

The design provides the capability to initially test, to the extent practical, the full operational sequence, including transfer to alternate power sources for the ECCS to demonstrate the state of readiness and capability of the system. This functional test is performed with the pressurizer pressure setpoint below the SI signal setpoint and with the RCS initially cold and depressurized. The ECCS valving is set to initially simulate the system alignment for plant power operation.

Details of the ECCS are found in Chapter 6. Performance under accident conditions is evaluated in Chapter 15. Surveillance requirements are identified in the Technical Specifications/Chapter 16.

3.1.4.9 Criterion 38 – Containment Heat Removal

> A system to remove heat from the reactor containment shall be provided. The system safety function shall be to reduce rapidly, consistent with the functioning of other associated systems, the containment pressure and temperature following any LOCA and maintain them at acceptably low levels.
>
> Suitable redundancy in components and features and suitable interconnections, leak detection, isolation, and containment capabilities shall be provided to assure that for onsite electrical power system operation (assuming offsite power is not available) and for offsite electrical power system operation (assuming onsite power is not available) the system safety function can be accomplished, assuming a single failure.

3.1.4.9.1 Discussion

The CSS consists of four independent trains, each containing a CS/RHR heat exchanger, a CS/RHR pump, spray nozzles, piping and valves. The CSS maintains the containment vessel internal peak pressure below the design pressure and reduces it to approximately atmospheric pressure over time in the event of a LOCA or a main steam line break. The CS/RHR pumps suction intake is from the in-containment RWSP, which is located at the lower elevation inside containment, and provides a continuous source for the CS/RHR pumps.

The CSSs consist of four independent subsystems supplied from separate Class 1E power buses. No single failure, including loss of onsite or offsite electrical power, can cause loss of more than a quarter of the installed 200% cooling capacity. The CSS has sufficient redundancy to perform its required safety functions following an accident assuming a single failure in one train with a second train out of service for maintenance.

The CSS is discussed in Chapter 6. Electrical power systems are described in Chapter 8. A containment pressure and temperature analysis following a LOCA and steam line break is given in Chapter 6, with additional results found in Chapter 15.

3.1.4.10 Criterion 39 – Inspection of Containment Heat Removal System

> The containment heat removal system shall be designed to permit appropriate periodic inspection of important components, such as the torus, sumps, spray nozzles and piping, to assure the integrity and capability of the system.

3.1.4.10.1 Discussion

The design of the CSS allows to the extent practical, inspection of the components to provide confirm the integrity and capability of the system. A portion of the essential equipment of the CSS is outside the containment, except for risers, distribution header piping, spray nozzles, and the RWSP. The RWSP, spray piping, and nozzles can be inspected during shutdown. Portions of the CS/RHR suction intake piping from the RWSP are embedded in concrete and are not accessible for inspection. The integrity of any inaccessible portions of piping is verified by testing as described in Subsection 3.1.4.11.1. Associated equipment outside the containment can be visually inspected.

Details of the inspection and surveillance program for the CSS are discussed in Chapter 6, the Inservice Inspection Program, as specified by the ASME Code, and the Technical Specifications/Chapter 16.

3.1.4.11 Criterion 40 – Testing of Containment Heat Removal System

> The containment heat removal system shall be designed to permit appropriate periodic pressure and functional testing to assure (1) the structural and leak-tight integrity of its components, (2) the operability and performance of the active components of the system, and (3) the operability of the system as a whole, and, under conditions as close to the design as practical, the performance of the full operational sequence that brings the system into operation, including operation of applicable portions of the protection system, the transfer between normal and emergency power sources, and the operation of the associated cooling water system.

3.1.4.11.1 Discussion

The CSS is designed to permit periodic testing to assure the structural and leak-tight integrity of CSS components and to assure the operability and performance of the active components of the system. All active components of the CSS, including the delivery piping up to the last powered valve before the spray nozzle, have the capability to be

tested during reactor power operation. A minimum flow path return to the pump suction line is used for pump tests during normal operation. Full flow pump performance testing is conducted during plant shutdown conditions. The pump rooms contain leakage detection, which alarms in the MCR. In addition, when the plant is shut down, smoke or air can be blown through the test connections for visual verification of the flow path.

The facility design allows, under conditions as close to the design as practicable, the performance of a full operational sequence that brings this system into operation.

Detailed discussions of the testing of these systems are provided in Chapter 6, and the Technical Specifications/Chapter 16.

3.1.4.12 Criterion 41 – Containment Atmosphere Cleanup

> Systems to control fission products, hydrogen, oxygen, and other substances which may be released into the reactor containment shall be provided, as necessary, to reduce, consistent with the functioning of other associated systems, the concentration and quantity of fission products released to the environment following postulated accidents and to control the concentration of hydrogen or oxygen and other substances in the containment atmosphere following postulated accidents to assure that containment integrity is maintained.
>
> Each system shall have suitable redundancy in components and features and suitable interconnections, leak detection, isolation, and containment capabilities to assure that for onsite electric power system operation (assuming off site power is not available) and for offsite electric power system operation (assuming onsite power is not available) its safety function can be accomplished, assuming a single failure.

3.1.4.12.1 Discussion

US-APWR fission product control systems following a DBA includes the: CSS, and Annulus Emergency Exhaust System (AEES). The CSS is a dual function ESF System that provides heat removal and fission product removal following a LOCA. The fission product in particulate form is mechanically removed by the CSS and the fission product in gaseous form (radio-iodine is the primary concern) is controlled by adjustment of the RWSP pH by use of chemicals. The CSS consists of four independent subsystems, each supplied power from separate Class 1E buses. The CSS has sufficient redundancy to perform its required safety functions following an accident assuming a single failure in one train with a second train out of service for maintenance. The AEES is designed for fission product removal by ventilation and air filtration following a DBA. The AEES prevents uncontrolled release to the environment from containment, exhaust air. The AEES is powered from the Class 1E buses so specified safety-related functions are maintained during a loss of offsite power. The system is designed to perform the safety-related functions with a single active component failure.

Hydrogen monitoring and control is provided for the unlikely occurrence of an accident that is more severe than a postulated DBA. The generation of hydrogen in the containment under these post-accident conditions has been evaluated. The hydrogen monitoring system (HMS) provides a hydrogen detector to detect hydrogen

concentration in containment air extracted from containment, and provides continuous indication in the MCR. The hydrogen igniters of the hydrogen ignition system (HIS) reduce concentration of hydrogen in containment in such an environment. The HMS and HIS are supplied by the non-Class 1E P1 and P2 power system, with alternate power capability.

These systems are discussed in Chapter 6. Electrical power systems are described in Chapter 8. A containment pressure and temperature analysis following a LOCA is given in Chapter 6, with additional results found in Chapter 15. The generation of hydrogen under such post–accident conditions is described in Chapter 19.

3.1.4.13 Criterion 42 – Inspection of Containment Atmosphere Cleanup Systems

> The containment atmosphere cleanup systems shall be designed to permit appropriate periodic inspection of important components, such as filter frames, ducts, and piping, to assure the integrity and capability of the systems.

3.1.4.13.1 Discussion

The containment atmosphere cleanup, and hydrogen monitoring and control systems are designed and located so that they can be inspected periodically, as required. Portions of the essential equipment of the CSS are located outside the containment, except for risers, distribution header piping, spray nozzles, and the RWSP, which are located inside the PCCV. The AEES is located in the R/B. The hydrogen monitor is located outside containment. The hydrogen igniters are located inside the PCCV. The equipment located outside the PCCV may be inspected during normal power operation. Components of the CSS, and HIS that are located inside the PCCV, can be inspected during shutdowns. See Chapter 6 for details on these systems.

3.1.4.14 Criterion 43 – Testing of Containment Atmospheric Cleanup Systems

> The containment atmosphere cleanup systems shall be designed to permit appropriate periodic pressure and functional testing to assure (1) the structural and leak-tight integrity of its components, (2) the operability and performance of the active components of the systems such as fans, filters, dampers, pumps, and valves, and (3) the operability of the systems as a whole and, under conditions as close to design as practical, the performance of the full operational sequence that brings the systems into operation, including operation of applicable portions of the protection system, the transfer between normal and emergency power sources, and the operation of associated systems.

3.1.4.14.1 Discussion

The containment atmosphere cleanup, and hydrogen monitoring and control systems include the CSS, AEES, HMS and HIS. The discussion of GDC 40 demonstrates the testability, and therefore, the operability and performance of the CSS. During normal operation, two trains are placed in operation, and as such provide continuous testability. Similarly, the HMS provides MCR readout and as such provides continuous testability. The hydrogen igniters are tested by energizing the circuit during refueling outages. The

AEES is periodically tested in accordance with the testing/surveillance requirements of the Technical Specifications/Chapter 16.

Chapter 6 provides system discussions, and Chapter 8 provides electrical power details. Technical Specifications/Chapter 16 provide testing/surveillance requirements.

3.1.4.15 Criterion 44 – Cooling Water

> A system to transfer heat from structures, systems, and components important to safety to an ultimate heat sink shall be provided. The system safety function shall be to transfer the combined heat load of these structures, systems, and components under normal operating and accident conditions.
>
> Suitable redundancy in components and features and suitable interconnections, leak detection, and isolation capabilities shall be provided to assure that for onsite electric power system operation (assuming offsite power is not available) and for off site electric power system operation (assuming onsite power is not available) the system safety function can be accomplished assuming a single failure.

3.1.4.15.1 Discussion

The component cooling water system (CCWS) and the essential service water system (ESWS) are provided to transfer heat from plant safety-related components to the UHS. These systems are designed to transfer their respective heat loads under all anticipated normal and accident conditions. Suitable redundancy, leak detection, systems interconnection, and isolation capabilities are incorporated in the design of these systems to assure the required safety function, assuming a single failure, with either onsite or offsite power. The active components are powered from the Class 1E buses. The systems are designed to perform safety-related functions assuming a single failure in one train with another train out of service for maintenance.

Complete descriptions of the ESWS and the CCWS are provided in Chapter 9. Chapter 8 describes the electrical power system.

3.1.4.16 Criterion 45 – Inspection of Cooling Water System

> The cooling water system shall be designed to permit appropriate periodic inspection of important components, such as heat exchangers and piping, to assure the integrity and capability of the system.

3.1.4.16.1 Discussion

The CCWS and portions of the ESWS are capable of being monitored during normal operation. The important components of these systems are located in accessible areas. These components will have suitable inspection capability as noted in Section 9.2. The COL Applicant is to provide a design that allows for the appropriate inspections and layout features of the ESWS. The integrity of any underground piping will be demonstrated by pressure and functional tests.

These systems are discussed in Chapter 9, with operability and surveillance requirements provided in the Technical Specifications/Chapter 16.

3.1.4.17 Criterion 46 – Testing of Cooling Water System

> The cooling water system shall be designed to permit appropriate periodic pressure and functional testing to assure (1) the structural and leak-tight integrity of its components, (2) the operability and the performance of the active components of the system, and (3) the operability of the system as a whole and, under conditions as close to design as practical, the performance of the full operational sequence that brings the system into operation for reactor shutdown and for LOCA, including operation of applicable portions of the protection system and the transfer between normal and emergency power sources.

3.1.4.17.1 Discussion

The CCWS and the ESWS operate continuously during normal plant operation and shutdown, under flow and pressure conditions that approximate accident conditions. These operations demonstrate the operability, performance, and structural and leak-tight integrity of all cooling water system components.

These cooling water systems are designed to include the capability for testing through the full operational sequence that brings the system into operation for reactor shutdown and for LOCAs, including operation of applicable portions of the protection system and the transfer between normal and emergency power sources. The CCWS and the ESWS are capable of being tested during normal operation by alternating operation of the systems between the redundant trains.

For detailed descriptions of the: cooling water systems, refer to Chapter 9, and for a description of the electrical power distribution systems, refer to Chapter 8. The operability and surveillance requirements are provided in the Technical Specifications/Chapter 16.

3.1.5 Reactor Containment

3.1.5.1 Criterion 50 – Containment Design Basis

> The reactor containment structure, including access opening, penetrations, and the containment heat removal system, shall be designed so that the containment structure and its internal compartments can accommodate, without exceeding the design leakage rate and with sufficient margin, the calculated pressure and temperature conditions resulting from any LOCA. This margin shall reflect consideration of (1) the effects of potential energy sources which have not been included in the determination of the peak conditions, such as energy in steam generators and as required by 10 CFR 50.44 energy from metal-water and other chemical reactions that may result from degradation but not total failure of emergency core cooling functioning, (2) the limited experience and experimental data available for defining accident phenomena and

containment responses, and (3) the conservatism of the calculational model and input parameters.

3.1.5.1.1 Discussion

The design of the containment structure is based on the full spectrum of containment DBAs, which include the rupture of a reactor coolant pipe in the RCS or the rupture of a main steam or feedwater line. In either case, the pipe rupture is assumed to be coupled with partial loss of the redundant safety feature systems (single failure of an active or passive component [loss of one train], and the loss of another train due to maintenance resulting in the application of minimum safety features resulting in the availability of the two remaining trains). The most limiting pressure and temperature responses are assessed to verify the adequacy of the containment structure. The maximum pressure and temperature reached for a containment DBA are presented in Chapter 6. The containment design, as discussed in Subsection 3.8.1, provides margin to the design basis limits.

See Chapters 3 and 6 for details.

3.1.5.2 Criterion 51 – Fracture Prevention of Containment Pressure Boundary

The reactor containment boundary shall be designed with sufficient margin to assure that under operating, maintenance, testing, and postulated accident conditions (1) its ferritic materials behave in a nonbrittle manner and (2) the probability of rapidly propagating fracture is minimized. The design shall reflect consideration of service temperatures and other conditions of the containment boundary material during operation, maintenance, testing, and postulated accident conditions, and the uncertainties in determining (1) material properties, (2) residual, steady-state, and transient stresses, and (3) size of flaws.

3.1.5.2.1 Discussion

The PCCV is a reinforced concrete structure with ferritic parts such as steel liner and its penetrations. Principal load-carrying components of ferritic materials exposed to the external environment are selected (as discussed in Subsection 3.8.1) so that their temperatures under normal operating and testing conditions are sufficiently above the nil ductility transition temperatures. This assures that under normal operating, maintenance, testing, and post accident conditions, ferritic materials behave in a non-brittle manner considering the associated uncertainties of material properties, stresses and size of flaws. This minimizes the probability of a rapidly propagating fracture. The preoperational testing, operational testing, surveillance program, and the QAP assure the integrity of the containment and its ability to meet all normal operational and accident requirements.

Refer to Section 3.8, Section 6.2, and Chapter 17 for details. Surveillance program requirements are discussed in the Technical Specifications/Chapter 16.

3.1.5.3 Criterion 52 – Capability for Containment Leakage Rate Testing

The reactor containment and other equipment which may be subjected to containment test conditions shall be designed so that periodic integrated leakage rate testing can be conducted at containment design pressure.

3.1.5.3.1 Discussion

The containment system is designed and constructed and the necessary equipment is provided to permit periodic integrated leak-rate tests (ILRT) during plant lifetime, in accordance with the requirements of 10 CFR 50, Appendix J (Reference 3.1-13). Details concerning the conduct of periodic ILRT are included in Chapter 6.

3.1.5.4 Criterion 53 – Provisions for Containment Testing and Inspection

The reactor containment shall be designed to permit (1) appropriate periodic inspection of all important areas, such as penetrations, (2) an appropriate surveillance program, and (3) periodic testing at containment design pressure of the leak-tightness of penetrations which have resilient seals and expansion bellows.

3.1.5.4.1 Discussion

Provisions exist for conducting individual leak-rate tests on containment penetrations. Penetrations are visually inspected and pressure tested for leak-tightness at periodic intervals. Other inspections are performed, as required by 10 CFR 50 Appendix J (Reference 3.1-13) (see Chapter 6).

3.1.5.5 Criterion 54 – Piping Systems Penetrating Containment

Piping systems penetrating the primary reactor containment shall be provided with leak detection, isolation and containment capabilities having redundancy, reliability, and performance capabilities which reflect the importance to safety of isolating these piping systems. Such piping systems shall be designed with a capability to test periodically the operability of the isolation valves and associated apparatus and to determine if valve leakage is within acceptable limits.

3.1.5.5.1 Discussion

The US-APWR containment isolation design satisfies the SRP 6.2.4 (Reference 3.1-14) requirements. Two barriers are provided; one inside containment and one outside containment. Usually these barriers are valves, but in some configurations, they are closed piping systems not connected to the RCS or to the containment atmosphere. Other acceptable methods on another defined basis to meet these requirements are discussed in Subsection 6.2.4, for the CS/RHRS, and the HHIS.

Piping systems penetrating the primary reactor containment are provided with containment isolation valves. Penetrations, which must be closed for containment isolation, have redundant valving and associated apparatus. Automatic isolation valves with air, or motor operators, which do not restrict normal plant operation, are periodically

tested to assure operability. For those penetrations that are normally open and are required to close, these penetrations use remote operated valves for isolation that close automatically on a containment isolation signal. The containment isolation signal is generated and actuated on by the PSMS.

Secondary system piping inside the containment is considered an extension of the containment boundary, as described in Subsection 6.2.4. The isolation valve arrangements are discussed in Chapter 6.

Piping that penetrates the containment has been equipped with test connections and test vents or has other provisions to allow periodic leak-rate testing to assure that leakage is within the acceptable limit as defined by the technical specifications/Chapter 16 consistent with 10 CFR 50, Appendix J (Reference 3.1-13), as described in Chapter 6.

The fuel transfer tube is not classified as a fluid system penetration. The blind flange and the portion of the transfer tube inside the containment are an extension of the containment boundary. The blind flange isolates the transfer tube at all times, except when the reactor is shutdown for refueling. This assembly is a penetration in the same sense as are equipment hatches and personnel locks.

3.1.5.6 Criterion 55 – Reactor Coolant Pressure Boundary Penetrating Containment

Each line that is part of the reactor coolant pressure boundary and that penetrates the primary reactor containment shall be provided with containment isolation valves as follows, unless it can be demonstrated that the containment isolation provisions for a specific class of lines, such as instrument lines, are acceptable on some other defined basis:

1) One locked closed isolation valve inside and one locked closed isolation valve outside the containment; or
2) One locked closed isolation valve inside and one locked closed isolation valve outside the containment; or
3) One locked closed isolation valve inside and one automatic isolation valve outside the containment. A simple check valve may not be used as the automatic isolation valve outside containment; or
4) One automatic isolation valve inside and one automatic isolation valve outside the containment. A simple check valve may not be used as the automatic isolation valve outside the containment.

Isolation valves outside the containment shall be located as close to the containment as practical and, upon loss of actuating power, automatic isolation valves shall be designed to take the position that provides greater safety.

Other appropriate requirements to minimize the probability or consequences of an accidental rupture of these lines or of lines connected to them shall be provided, as necessary, to assure adequate safety. Determination of the appropriateness of these requirements, such

as higher quality in design, fabrication and testing additional provisions for inservice inspection, protection against more severe natural phenomena, and additional isolation valves and containment, shall include consideration of the population density and use characteristics and physical characteristics of the site environs.

3.1.5.6.1 Discussion

Lines that are a part of the RCPB and penetrate the containment are provided with isolation valves meeting the intent of this criterion. Several penetrations use alternative arrangements, which satisfy containment isolation on some other defined bases. Special cases are described in Subsection 6.2.4. A simple check valve may not be used as the automatic isolation valve outside the containment.

3.1.5.7 Criterion 56 – Primary Containment Isolation

Each line that connects directly to the containment atmosphere and penetrates the primary reactor containment shall be provided with containment isolation valves as follows, unless it can be demonstrated that the containment isolation provisions for a specific class of lines, such as instrument lines, are acceptable on some other defined basis:

1) One locked closed isolation valve inside and one locked closed isolation valve outside the containment; or
2) One automatic isolation valve inside and one locked closed isolation valve outside the containment; or
3) One locked closed isolation valve inside and one automatic isolation valve outside containment. A simple check valve may not be used as the automatic isolation valve outside containment; or
4) One automatic isolation valve inside and one automatic isolation valve outside the containment. A simple check valve may not be used as the automatic isolation valve outside the containment.

Isolation valves outside the containment shall be located as close to the containment as practical and, upon loss of actuating power automatic isolation valves shall be designed to take the position that provides greater safety.

3.1.5.7.1 Discussion

Lines which communicate directly with the containment atmosphere and which penetrate the reactor containment are normally provided with two isolation valves in series, one inside and one outside the containment, in accordance with one of the above acceptable arrangements. Several penetrations use alternative arrangements, which satisfy containment isolation on some other defined bases. Special cases are described in Subsection 6.2.4.

Valving arrangements are combinations of locked-shut isolation valves and automatic isolation valves or remote-manual isolation valves. No simple check valves are utilized

as automatic isolation valves outside the containment. Where necessary, provision for leak detection is provided for lines outside the containment.

3.1.5.8 Criterion 57 – Closed System Isolation Valves

> Each line that penetrates the primary reactor containment and is neither part of the reactor coolant pressure boundary nor connected directly to the containment atmosphere shall have at least one containment isolation valve which shall be either automatic, locked closed, or capable of remote manual operation. This valve shall be outside the containment and located as close to the containment as practical. A simple check valve may not be used as the automatic isolation valve.

3.1.5.8.1 Discussion

Lines that penetrate the containment and that are neither part of the RCPB nor connected directly to the containment atmosphere are considered closed systems within the containment. These lines are equipped with at least one containment isolation valve of one of the following types:

- An automatic isolation valve (a simple check valve is not used as this automatic valve)
- A locked-closed valve
- A valve capable of remote manual operation

Isolation valves are located outside the containment and as close to the containment wall as practical. Valve locations are discussed in Subsection 6.2.4.

Several penetrations use alternative arrangements, which satisfy containment isolation on some other defined bases. Special cases are described in Subsection 6.2.4.

3.1.6 Fuel and Reactivity Control

3.1.6.1 Criterion 60 – Control of Releases of Radioactive Materials to the Environment

> The nuclear power unit design shall include means to control suitably the release of radioactive materials in gaseous and liquid effluents and to handle radioactive solid wastes produced during normal reactor operation, including anticipated operational occurrences. Sufficient holdup capacity shall be provided for the retention of gaseous and liquid effluents containing radioactive materials, particularly where unfavorable site environmental conditions can be expected to impose unusual operational limitations upon the release of such effluents to the environment.

3.1.6.1.1 Discussion

The US-APWR is designed so that releases of radioactive materials in gaseous, liquid, and solid form are minimized. Means are provided to control the release of radioactive materials in gaseous and liquid effluents and to handle radioactive solid wastes

produced during normal reactor operation, including AOOs. The radioactive waste management systems (RWMS) are designed to minimize the potential for an inadvertent release of radioactivity from the facility and to assure that the discharge of radioactive wastes is maintained as low as practicable below the regulatory limits of 10 CFR 20 (Reference 3.1-15), and below the guidelines of 10 CFR 50, Appendix I (Reference 3.1-16), during normal operation. The gaseous and liquid RWMS have adequate capacity and redundancy to meet discharge concentration limits of 10 CFR 20 (Reference 3.1-15) during periods of design-basis fuel leakage. The RWMS, the design criteria, and the amounts of estimated releases of radioactive effluents to the environment are described in Chapter 11. The radiation monitoring of discharge paths of the gaseous and liquid radwaste processing systems and isolation on high radiation is also discussed in Chapter 11.

3.1.6.2 Criterion 61 – Fuel Storage and Handling and Radioactivity Control

> The fuel storage and handling, radioactive waste, and other systems which may contain radioactivity shall be designed to assure adequate safety under normal and postulated accident conditions. These systems shall be designed (1) with a capability to permit appropriate periodic inspection and testing of components important to safety, (2) with suitable shielding for radiation protection, (3) with appropriate containment, confinement, and filtering systems, (4) with a residual heat removal capability having reliability and testability that reflects the importance to safety of decay heat and other residual heat removal, and (5) to prevent significant reduction in fuel storage coolant inventory under accident conditions.

3.1.6.2.1 Discussion

The spent fuel pit cooling and purification system (SFPCS), fuel handling and radioactive waste systems are designed to cool and purify spent fuel pit (SFP) water, to supply borated water, provide shielding, and assure safety under normal and postulated accident conditions. The SFPCS is a two-train system that consists of a closed circuit that includes: heat exchangers, pumps, demineralizers, and filters. The subsystem is designed to run on Class 1E power during a loss of offsite power.

The SFPCS is designed to maintain the water level of the SFP, to prevent uncovering of the stored fuel from leakage due to failure of the piping, and to assure radiation shielding. Additionally, water may be added from several other sources, if required (Subsection 9.1.3). Adequate shielding is provided as described in Chapter 12. Radiation monitoring is provided as discussed in Chapters 11 and 12.

Normal heating ventilation and air conditioning (HVAC) system for the SFP area and purification and cooling system is provided by the auxiliary building (A/B) HVAC System. This HVAC System is described in Chapter 9.

The SFP cooling subsystem provides cooling to remove residual heat from the fuel stored in the SFP. The SFPCS is designed with redundancy, testability, and inspection capability. SSCs are designed and located so that appropriate periodic inspection and testing may be performed.

3.1.6.3 Criterion 62 – Prevention of Criticality in Fuel Storage and Handling

Criticality in the fuel storage and handling system shall be prevented by physical systems or processes, preferably by use of geometrically safe configurations.

3.1.6.3.1 Discussion

Fuel storage and handling systems are provided to preclude accidental criticality for new and spent fuel. The restraints, interlocks, and geometrically safe physical arrangement provided for the safe handling and storage of new and spent fuel with respect to critically prevention are discussed and illustrated in Chapter 9.

As stated in Subsection 9.1.1, the spent fuel racks are designed to have sufficient separation between adjacent fuel assemblies so the maximum k_{eff} under worst- case conditions is less than 1.0 without credit for the soluble boron, and less than 0.95 with partial credit taken for soluble boron. As also stated in Subsection 9.1.1, the new fuel racks are designed to have sufficient separation between adjacent fuel assemblies such that the maximum k_{eff} is less than 0.95 when flooded with unborated water, and less than 0.98 under optimum moderation conditions. New and spent fuel storage racks are seismic Category I components.

The design of the spent fuel storage rack assembly is such that it is configurationally impossible to insert the spent fuel assemblies in other than prescribed locations, without physically modifying the rack, thereby preventing any possibility of accidental criticality.

Layout of the fuel handling area is such that a spent fuel cask cannot traverse the SFP.

See Chapter 9 for details.

3.1.6.4 Criterion 63 – Monitoring Fuel and Waste Storage

Appropriate systems shall be provided in the fuel storage and radioactive waste systems and associated handling areas (1) to detect conditions that may result in the loss of residual heat removal capability and excessive radiation levels and (2) to initiate appropriate safety actions.

3.1.6.4.1 Discussion

Instrumentation is provided to give indication and annunciation in the MCR of excessive temperature or low water level in the SFP. An area radiation monitor is provided in the fuel storage area for personnel protection and general surveillance. This area monitor alarms locally and in the MCR. Normally, the A/B HVAC System removes radioactivity from the atmosphere above the SFP and discharges it by way of the plant vent. The ventilation system is continuously monitored by gaseous radiation monitors. If radiation levels reach a predetermined point, an alarm is actuated in the MCR.

See Chapters 7, 9, and 12 for details.

3.1.6.5 Criterion 64 – Monitoring Radioactivity Releases

Means shall be provided for monitoring the reactor containment atmosphere, spaces containing components for recirculation of LOCA fluids, effluent discharge paths, and the plant environs for radioactivity that may be released from normal operations, including anticipated operational occurrences, and from postulated accidents

3.1.6.5.1 Discussion

The containment atmosphere is continuously monitored during normal and transient station operations, using the containment particulate, and gaseous radiation monitors. Under accident conditions, samples of the containment atmosphere provide data on existing airborne radioactive concentrations within the containment.

Radioactivity levels contained in the facility effluent and discharge paths and in the plant environs are continuously monitored during normal and accident conditions by the plant Radiation Monitoring Systems.

Portable radiation detection instruments are provided to periodically monitor radiation levels in the R/B spaces, which contain components for recirculation of LOCA fluids and in the A/B for components that process radioactive wastes. In addition to the installed detectors, periodic plant environmental surveillance is established. Measurement capability and reporting of effluents are based on the guidelines of RG 1.183 (Reference 3.1-7) and RG 1.21 (Reference 3.1-17).

Radiation Monitoring Systems are discussed in Chapter 11, Section 11.5, and Chapter 12, Section 12.3.

3.1.7 Combined License Information

COL 3.1(1) *The COL Applicant is to provide a design that allows for the appropriate inspections and layout features of the ESWS.*

3.1.8 References

3.1-1 Domestic Licensing of Production and Utilization Facilities, General Design Criteria for Nuclear Power Plants, Energy. Title 10, Code of Federal Regulations, Part 50, Appendix A, U.S. Nuclear Regulatory Commission, Washington, DC.

3.1-2 Codes and Standards, Domestic Licensing of Production and Utilization Facilities, Energy. Title 10, Code of Federal Regulations, Part 50.55a, U.S. Nuclear Regulatory Commission, Washington, DC.

3.1-3 Fire Protection Program, Auxiliary Systems, Standard Review Plan for the Review of Safety Analysis Reports for Nuclear Power Plant. NUREG-0800, Standard Review Plan 9.5.1, Rev. 5, U.S. Nuclear Regulatory Commission, Washington, DC, March 2007.

3.1-4 Fire Protection for Nuclear Power Plants. Regulatory Guide 1.189, Rev. 1, U.S. Nuclear Regulatory Commission, Washington, DC, March 2007.

3.1-5 Rules for Construction of Nuclear Power Plant Components, ASME Boiler and Pressure Vessel Code, Section III, 1992 Edition through the 1992 Addenda. American Society of Mechanical Engineers.

3.1-6 Alternative Radiological Source Terms for Evaluating Design Basis Accidents at Nuclear Power Reactors. Regulatory Guide 1.183, U.S. Nuclear Regulatory Commission, Washington, DC, July 2000.

3.1-7 Domestic Licensing of Production and Utilization Facilities, Fracture Toughness Requirements, Energy. Title 10, Code of Federal Regulations, Part 50, Appendix G, U.S. Nuclear Regulatory Commission, Washington, DC.

3.1-8 Standard Practice for Conducting Surveillance Tests for Light-Water Cooled Nuclear Power Reactor Vessels, ASTM E-185-82, American Society of Testing Materials.

3.1-9 Domestic Licensing of Production and Utilization Facilities, Reactor Vessel Material Surveillance Program Requirements, Energy. Title 10, Code of Federal Regulations, Part 50, Appendix H, U.S. Nuclear Regulatory Commission, Washington, DC.

3.1-10 Protection Against Non Ductile Failure, ASME Code, Section III, Nuclear Power Plant Components, Appendix G.

3.1-11 Rules for Inservice Inspection of Nuclear Power Plant Components, ASME Code, Section XI, Edition 2001, through 2003 Addenda.

3.1-12 Periodic Testing of Protection System Actuation Functions. Regulatory Guide 1.22, U.S. Nuclear Regulatory Commission, Washington, DC, February 1972.

3.1-13 Domestic Licensing of Production and Utilization Facilities, Primary Reactor Containment Leakage Testing for Water-Cooled Power Reactors, Energy. Title 10, Code of Federal Regulations, Part 50, Appendix J, U.S. Nuclear Regulatory Commission, Washington, DC.

3.1-14 Containment Isolation System, Standard Review Plan for the Review of Safety Analysis Reports for Nuclear Power Plant. NUREG-0800, Standard Review Plan 6.2.4, Rev. 3, U.S. Nuclear Regulatory Commission, Washington, DC, March 2007.

3.1-15 Standards for Protection Against Radiation, Energy. Title 10, Coded of Federal Regulations, Part 20, U.S. Nuclear Regulatory Commission, Washington, DC.

3.1-16 Numerical Guides for Design Objectives and Limiting Conditions for Operation to Meet the Criterion, "As Low as is Reasonably Achievable" for Radioactive Material in Light-Water-Cooled Nuclear Power Reactor Effluents, Domestic Licensing of Production and Utilization Facilities, Energy. Title 10, Code of Federal Regulations, Part 50, Appendix I, U.S. Nuclear Regulatory Commission, Washington, DC.

3.1-17 Measuring, Evaluating, and Reporting Radioactivity in Solid Waste and Releases of Radioactive Materials in Liquid and Gaseous Effluents from Light-Water Cooled Nuclear Power Plants. Regulatory Guide 1.21, Rev. 1, U.S. Nuclear Regulatory Commission, Washington, DC, June 1974.

3.2 Classification of Structures, Systems, and Components

The US-APWR SSCs are classified according to nuclear safety classification, seismic category, quality groups, and codes and standards. The US-APWR SSCs are classified as safety-related as defined in 10 CFR 50.2 (Reference 3.2-1) or non safety-related. The safety-related SSCs are those relied upon to remain functional during and following design basis events to assure the following:

- The integrity of the RCPB
- The capability to shut down the reactor and maintain it in a safe-shutdown condition
- The capability to prevent or mitigate the consequences of accidents that could result in potential offsite exposures comparable to the guideline exposures of 10 CFR 50.34(a)(1) (Reference 3.2-2) or 10 CFR 100.11 (Reference 3.2-3)

This section identifies those safety-related SSCs that are designed to withstand the effects of earthquakes without the loss of capability to perform their safety functions and those fluid systems or portions thereof that are safety-related, as well as the applicable industry codes and standards for pressure-retaining components.

3.2.1 Seismic Classification

GDC 2 of 10 CFR 50, Appendix A, (Reference 3.2-4) requires in part that SSCs important to safety be designed to withstand the effects of earthquakes without the loss of the capability to perform their safety functions. To meet these requirements, the guidance provided in NRC RG 1.29 (Reference 3.2-5) is used for identifying and classifying those SSCs. The earthquake against which these SSCs are designed to withstand and remain functional is defined as the safe-shutdown earthquake (SSE) in 10 CFR 50, Appendix S (Reference 3.2-6). The SSE is based upon an evaluation of the maximum earthquake potential, and is that earthquake which produces the maximum vibratory ground motion for which safety-related SSCs are designed to remain functional (see Subsection 3.7.1.1 for a discussion of the application of the SSE). Appendix S of 10 CFR 50 (Reference 3.2-6) also requires consideration of surface deformation and seismically induced floods and water waves from either a local or distant generated seismic activity and other design conditions determined in 10 CFR 100.23 (Reference 3.2-7) to assure that certain SSCs will remain functional.

The site-independent seismic design of the US-APWR sets the operating-basis earthquake (OBE) ground motion at 1/3 of the SSE as discussed in Subsection 3.7.1.1, which eliminates the requirement for performing explicit design analysis for OBE loads. In accordance with Appendix S of 10 CFR 50 (Reference 3.2-6), SSCs necessary for continued safe operation must remain functional without undue risk to the health and safety of the public and within applicable stress, strain, and deformation, during and following an OBE. The OBE is associated with plant shutdown. Table 3.2-1 is a list of non-safety related components required for normal plant shutdown.

GDC 1 and 10 CFR 50, Appendix B (Reference 3.2-8), requires that safety-related SSCs be designed, fabricated, erected, and tested to quality standards commensurate with the importance of the safety functions to be performed. The Quality Assurance (QA) program implements the requirements of 10 CFR 50, Appendix B (Reference 3.2-8).

These QA program requirements are applied to activities affecting safety-related functions of SSCs designated as seismic category I, commensurate with their importance to safety.

RG 1.29 (Reference 3.2-5) is used to identify and classify those SSCs (including their foundations and supports) required for safe-shutdown, that must be designed to withstand the effects of the SSE and remain functional, as seismic category I. The recommendations in RG 1.29 (Reference 3.2-5) are used for systems, other than RWMS, that contain, or may contain, radioactive material and whose postulated failure would result in potential offsite whole body (or equivalent) doses that are more than 0.5 roentgen equivalent in man (rem), and are classified as seismic category I. Compliance with RG 1.29 (Reference 3.2-5) assures that a designed-in safety margin is provided for bringing the reactor to a safe-shutdown condition, while also reducing potential offsite doses from seismic events.

Some SSCs required for operation (excluding electrical features) do not need to be designed to seismic category I requirements. Examples of these SSCs include those portions of seismic category I systems such as vent lines, drain lines, fill lines and test lines on the downstream side of isolation valves and those portions of the system not required to perform a safety function.

The SSCs that are not designated as seismic category I and are not required to remain functional following an SSE, but whose failure could reduce the functioning of any seismic category I SSCs to an unacceptable safety level are designed and constructed to maintain their structural integrity under seismic loading from the SSE. These non-seismic (NS) SSCs that must maintain their structural integrity are designated as seismic category II.

Seismic category I applies to both the functionality and the integrity of the SSCs. Seismic category II applies only to the integrity of SSCs. Items that are subjected to an SSE, or items that create seismically-induced flooding, are designated as seismic category II to prevent the loss of the function of any safety-related items.

US-APWR SSCs are assigned to one of three seismic categories (seismic category I, seismic category II, or NS) depending on the nuclear safety function or the particular SSC.

RG 1.151 (Reference 3.2-9) is used as guidance for the seismic design and classification of safety-related instrumentation sensing lines. The seismic classification of safety-related instrumentation sensing lines is in accordance with RG 1.151 (Reference 3.2-9), Positions C.2 and C.3. The use of this guidance assures that the instrument sensing lines used to actuate or monitor safety-related systems are appropriately classified and are capable of withstanding the effects of the SSE.

GDC 61 requires that RWMS, and other systems that may contain radioactivity, be designed to assure adequate safety under normal and postulated accident conditions. Postulated conditions considered with respect to seismic design and classification of SSCs include the loss of SSC integrity and potential radioactive releases as a result of seismic events. RG 1.143 (Reference 3.2-10) is used as guidance relative to seismic design and classification for radioactive waste management SSCs. The use of the classification information and design criteria provided in the RG 1.143

(Reference 3.2-10) assures that components and structures used in RWMS are designed, constructed, installed, and tested in a manner that protects the health and safety of the public and plant operating personnel. Compliance with GDCs 2 and 61, as they relate to designing and constructing these SSCs to withstand earthquakes, and RG 1.143 (Reference 3.2-10), for seismic design and classification, provides assurance that SSCs containing radioactivity are properly classified and radiation exposures as a result of seismic events are as low as reasonably achievable.

RG 1.189 (Reference 3.2-11) is used as guidance to establish the design requirements of fire protection systems to meet the requirements of GDC 2 as it relates to designing these SSCs to withstand earthquakes. RG 1.189 is used to identify portions of fire protection SSCs requiring some level of seismic design consideration.

RG 1.189 (Reference 3.2-11), Positions 3.2.1, 6.1.1.2, and 7.1 are used to provide guidance for the proper seismic classification of fire protection systems. The use of this guidance assures that the fire protection systems for manual firefighting in areas containing safety-related equipment, containment penetrations, and reactor coolant pump (RCP) lube oil are properly classified and analyzed for SSE loads. Compliance with the above guidance assures that the safety-related SSCs required to function during an SSE are properly classified as seismic category I, and perform their safety functions.

3.2.1.1 Definitions

3.2.1.1.1 Seismic Category I

Seismic category I applies to safety-related SSCs (including their foundations and supports) that must remain functional and/or retain their pressure integrity in the event of an SSE.

This category includes SSCs designated as seismic category I in accordance with RG 1.29 (Reference 3.2-5). These SSCs are designed to withstand the effects of the SSE and maintain their structural integrity (including pressure integrity) and their specified design functions. The new and spent fuel pit structures, including fuel racks, are designated seismic category I. Equipment Class 1, 2, or 3 components are designated seismic category I.

Additionally, in accordance with RG 1.29 (Reference 3.2-5), systems, other than RWMS, that contain, or may contain, radioactive material whose postulated failure would result in potential offsite whole body doses that are more than the recommended limits, are classified as seismic category I.

Seismic category I SSCs are designed to withstand the effects of natural phenomena, including earthquakes, without jeopardizing the plant nuclear safety as discussed in Sections 3.7 and 3.10. The interaction of non-seismic category I structures with seismic category I structures is discussed in Subsection 3.7.2.8.

Seismic category I SSCs meet the QA requirements of 10 CFR 50, Appendix B (Reference 3.2-8).

3.2.1.1.2 Seismic Category II

Seismic category II applies to SSCs which perform no safety-related function, and whose continued function is not required, but whose structural failure or interaction could degrade the functioning or integrity of a seismic category I SSC to an unacceptable level, or could result in incapacitating injury to occupants of the control room. Seismic category II SSCs are designed so that the SSE could not cause unacceptable structural interaction or failure with seismic category I SSCs. For fluid systems, this requires an adequate level of pressure boundary integrity to prevent seismically-induced flooding that may cause adverse effects on safety-related SSCs.

Seismic category II SSCs are analyzed and designed for the SSE using methods appropriate to demonstrate position retention with no adverse interaction effects as specified for seismic category I SSCs. Seismic category II may be limited to the parts of SSCs where structural analyses show a credible failure or interaction due to the SSE, which in some instances is limited to their supports.

Seismic category II SSCs meet the pertinent QA requirements of 10 CFR 50, Appendix B (Reference 3.2-8) to such an extent as to assure that their structural failure or interaction does not degrade the functional or structural integrity of seismic category I SSCs.

3.2.1.1.3 Non-Seismic

SSCs that are not classified as seismic category I or seismic category II are classified as NS. NS SSCs have no safety-related function or nuclear safety design requirements. The NS SSCs are primarily located outside of safety-related buildings or segregated from seismic category I SSCs so that the failure of their structural integrity would not impact the seismic category I SSCs and cause adverse system interactions. If it is determined that an NS SSC would cause an adverse impact on a seismic category I SSC, then it is designed and/or mounted in accordance with seismic category II requirements to withstand an SSE event so that it could not fail and cause an adverse impact or interaction with the seismic category I SSC.

NS SSCs are designed and constructed to the applicable standard building code requirements, industry codes and standards, and/or manufacturer standards.

For NS items located in the proximity of safety-related SSCs that meet seismic category II requirements by their mounting, the pre-assigned equipment class remains unchanged.

3.2.1.2 Classifications

Table 3.2-3 provides the relationship between different equipment classes, RG 1.29 (Reference 3.2-5) seismic design requirements and the pertinent QA requirements of 10 CFR 50, Appendix B (Reference 3.2-8). Table 3.2-2 provides a list of mechanical and fluid systems, components, and equipment and their designated seismic category along with the equipment class, and design codes and standards. The equipment classification is shown on the piping and instrumentation diagrams (P&ID) included in various sections. The seismic classification is identified in Table 3.2-2 and can be determined by the equipment class on the P&IDs, or as noted in Table 3.2-2. The COL Applicant is to

identify the site-specific, safety-related systems and components that are designed to withstand the effects of earthquakes without loss of capability to perform their safety function; and those site-specific, safety-related fluid systems or portions thereof; as well as the applicable industry codes and standards for pressure-retaining components.

The seismic category of safety-related and important to safety electrical, mechanical, and instrumentation and control (I&C) equipment is provided in Appendix 3D.

3.2.1.3 Classification of Building Structures

Table 3.2-4 provides the designated seismic category of building and structures (seismic category I, II, and NS). The US-APWR Nuclear Island consists of the R/B, PCCV, containment internal structure, A/B, access building (AC/B), and east and west power source buildings (PS/Bs). The US-APWR design includes the R/B, PCCV, containment internal structure, and PS/B (east and west). Unique non-standard buildings and structures in Table 3.2-4 include the UHSRS, ESWPT, PSFSV, NS T/G Pedestal, and NS Outside Buildings. Minor NS Buildings and all structures in the plant yard are generally not listed in Table 3.2-4. Design of all plant buildings and structures are addressed where appropriate in Chapter 3 and its appendices.

3.2.2 System Quality Group Classification

GDC 1 of 10 CFR 50, Appendix A (Reference 3.2-4), and 10 CFR 50.55a (Reference 3.2-12), as they relate to safety-related SSCs, requires that SSCs be designed, fabricated, erected, constructed, tested, and inspected to quality standards commensurate with the importance of the safety function to be performed. RG 1.26 (Reference 3.2-13) is used to meet these requirements by classifying safety-related fluid systems and components and applying corresponding quality codes and standards to such systems and components.

Safety-related fluid systems may perform any of the following functions:

- Fission product containment
- Core cooling
- Reactor shutdown
- Reactivity control
- Post-accident containment heat removal
- Post-accident containment atmosphere cleanup
- Post-accident fission product removal
- Residual heat removal from the reactor and/or from the spent fuel storage pool
- Containment of radioactive materials

Portions of fluid systems which provide cooling or heating, sealing, lubrication, fuel, motive power, isolation, flood protection, or leakage detection necessary to support the accomplishment of any of the above functions are also considered safety-related.

10 CFR 50.55a (Reference 3.2-12) identifies those ASME Code, Section III, (Reference 3.2-14), Class 1, safety-related components that are part of the RCPB. These components are designated in RG 1.26 (Reference 3.2-13) as Quality Group A. In addition, RG 1.26 (Reference 3.2-13) identifies, on a functional basis, water- and steam-containing components of those safety-related systems that are designated as Quality Groups B and C. Quality Group D applies to non safety-related water- and steam-containing components of systems.

NRC Generic Letter 90-06 (Reference 3.2-15) is used as guidance for classification of power operated relief valves (PORVs), associated components, and block valves. These components are classified as safety-related for performing safety functions, such as, the mitigation of design-basis steam generator tube rupture accident, low temperature overpressure protection of the RV, and/or plant cooldown. The safety-related classification addresses the redundant and diverse control systems designed to seismic category I criteria. These PORVs and block valves are included in a quality assurance program that is in compliance with 10 CFR 50, Appendix B (Reference 3.2-8), as identified in Table 3.2-2.

Additional safety-related systems considered that are not identified in RG 1.26 (Reference 3.2-13), and references establishing their acceptable classifications, are identified in NUREG-0800 SRP 3.2.2 (Reference 3.2-16), Appendix A. For example, some additional systems considered are: instrument and service air, emergency and normal ventilation, fuel handling, and RWMS. These systems are designed, fabricated, erected, and tested to quality standards commensurate with the safety function they perform.

The application of 10 CFR 50.55a (Reference 3.2-12) and GDC 1 provides assurance that established standard practices of proven or demonstrated effectiveness are used to achieve a high likelihood that these safety functions will be performed and that the codes and standards applied are commensurate with the importance to safety of these functions.

The recommendations provided in RG 1.143 (Reference 3.2-10) and RG 1.151 (Reference 3.2-9) are also used in identifying system quality group classification and/or standards for RWMS, and instrument sensing lines, respectively.

Safety-related and non safety-related instrumentation and electrical equipment are discussed in Chapters 7 and 8. Safety-related and important to safety electrical equipment and instrumentation are identified in Appendix 3D.

The quality group classifications are based on the reliance placed on those systems that perform any of the following functions:

- Prevent or mitigate the consequences of accidents and malfunctions originating within the RCPB
- Permit reactor shutdown and maintenance in the safe-shutdown condition
- Contain radioactive material

The US-APWR safety classification system for safety-related SSCs follows the requirements and guidelines described above. The US-APWR SSCs are classified in

equipment Classes 1 to 7 with respect to the Quality Group Classification. Table 3.2-3 correlates the US-APWR classification of SSCs with the ASME Code, Section III (Reference 3.2-14), RG 1.26 (Reference 3.2-13), NRC Quality Group classes, RG 1.29 (Reference 3.2-5) seismic category, 10 CFR 50 Appendix B (Reference 3.2-8), and other applicable industry codes and standards. Table 3.2-2 provides the equipment classes and seismic category for the US-APWR mechanical and fluid systems, components (including pressure-retaining), and equipment and the applicable codes and standards. The COL Applicant is to identify the equipment class and seismic category of the site-specific, safety-related and non safety-related fluid systems, components (including pressure retaining), and equipment as well as the applicable industry codes and standards.

The identification and standards of the US-APWR equipment classifications and their definitions and criteria are described below.

3.2.2.1 Equipment Class 1

Equipment Class 1 has the highest integrity for SSCs and is equivalent to RG 1.26 (Reference 3.2-13), NRC Quality Group A as defined in 10 CFR 50.55a (Reference 3.2-12) and applies to the components of the RCPB.

Equipment Class 1 SSCs are classified as seismic category I, and the codes and standards for the NRC Quality Group A are applied. Equipment Class 1 components are designed to meet ASME Code, Section III (Reference 3.2-14), Class 1 requirements and the QA criteria of 10 CFR 50, Appendix B (Reference 3.2-8). Supports are designed and constructed to ASME Code, Section III (Reference 3.2-14), Subsection NF requirements and the same QA criteria for components applies.

Equipment Class 1 is also assigned to safety-related structures, structural components, instrumentation, controls, and electrical components.

3.2.2.2 Equipment Class 2

Equipment Class 2 is equivalent to RG 1.26 (Reference 3.2-13), NRC Quality Group B. Equipment Class 2 applies to water- and steam-containing pressure vessels, heat exchangers (other than turbines and condensers), storage tanks, piping, pumps, and valves that are either (1) part of the RCPB defined in 10 CFR 50.2 (Reference 3.2-1) but excluded from the requirements of 10 CFR 50.55a (Reference 3.2-12) pursuant to paragraph I(2) of that section, or (2) not part of the RCPB but are part of the following:

- Safety-related systems or portions of systems that are designed for the following:
  - Emergency core cooling
  - Post-accident containment heat removal
  - Post-accident fission product removal
- Safety-related systems or portions of systems that are designed for the following:
  - Reactor shutdown
  - Residual heat removal

- Those portions of the steam and feedwater systems extending from and including the secondary side of steam generators up to and including the outermost containment isolation valves, and connected piping up to and including the first valve (including a safety or relief valve) that is either normally closed or capable of automatic closure during all modes of normal reactor operation.
- Systems or portions of systems that are connected to the RCPB and are not capable of being isolated from the boundary during all modes of normal reactor operation by two valves, each of which is either normally closed or capable of automatic closure.

In addition to the above, the following systems and components designated NRC Quality Group B are classified in SRP 3.2.2 (Reference 3.2-16), Appendix A, as Equipment Class 2:

- Containment isolation system penetrations including associated piping and valves, and isolation barriers comprised of closed systems inside and outside containment described in Subsection 6.2.4.
- Containment isolation system instrument sensing lines penetrating containment described in “Instrument Lines Penetrating Primary Reactor Containment (Safety Guide 11) Supplement to Safety Guide 11, Backfitting Considerations”, RG 1.11 (Reference 3.2-17) that may be used to implement containment isolation design criteria for instrument lines.
- Safety-related instrument sensing lines described in RG 1.151 (Reference 3.2-9) for classifying instrument sensing lines in terms of the ASME Code, Section III (Reference 3.2-14), Class 2.

Equipment Class 2 SSCs are classified as seismic category I, and the codes and standards for NRC Quality Group B are applied. Equipment Class 2 components are designed to meet ASME Code, Section III (Reference 3.2-14), Class 2 requirements and the QA criteria of 10 CFR 50, Appendix B (Reference 3.2-8) applies. Supports are designed and constructed to ASME Code, Section III (Reference 3.2-14), Subsection NF requirements and the same QA criteria for components applies.

3.2.2.3 Equipment Class 3

Equipment Class 3 is equivalent to RG 1.26 (Reference 3.2-13), NRC Quality Group C. Equipment Class 3 applies to water-, steam-, and radioactive-waste-containing pressure vessels; heat exchangers (other than turbines and condensers); storage tanks; piping; pumps; and valves that are not part of the RCPB or included in Quality Group B but part of the following:

- Safety-related cooling water and emergency feedwater systems or portions of those systems that are designed for the following:
  - Emergency core cooling
  - Post-accident containment heat removal
  - Post-accident containment atmosphere cleanup

  - Residual heat removal from the reactor and from the spent fuel storage pit (including primary and secondary cooling systems), although Quality Group B includes portions of those systems that are required for their safety functions and that (i) do not operate during any mode of normal reactor operation and (ii) cannot be tested adequately

- Cooling water and seal water systems or portions of those safety-related systems that are designed for the functioning of safety-related components and systems, such as RCPs and the MCR.
- Systems or portions of systems that are connected to the RCPB and are capable of being isolated from that boundary during all modes of normal reactor operation by two valves, each of which is either normally closed or capable of automatic closure.
- Systems, other than RWMS, not covered above, that contains or may contain radioactive material and whose postulated failure would result in conservatively calculated potential offsite doses that exceed 0.5 rem to the whole body or its equivalent to any part of the body.

In addition to the above, the following systems and components designated NRC Quality Group are classified in SRP 3.2.2 (Reference 3.2-16), as Equipment Class 3:

- Emergency power sources (gas turbines)
- Equipment and floor drainage system described in Subsection 9.3.3, SRP Section 9.3.3 (Reference 3.2-18)
- Plant ventilation systems for areas such as the MCR and engineered safety feature rooms
- Safety-related instrument sensing lines described in RG 1.151 (Reference 3.2-9) for classifying instrument sensing lines in terms of the ASME Code, Section III (Reference 3.2-14), Class 3
- Ultimate heat sink (UHS) and supporting systems described in Subsection 9.2.5.

Equipment Class 3 SSCs are classified as seismic category I, and the codes and standards for NRC, Quality Group C are applied. Equipment Class 3 components are designed to meet ASME Code, Section III (Reference 3.2-14), Class 3 requirements and the QA criteria of 10 CFR 50, Appendix B (Reference 3.2-8). Supports are designed and constructed to ASME Code, Section III (Reference 3.2-14), Subsection NF requirements, and the same QA criteria for components apply to the supports.

3.2.2.4 Equipment Class 4

Equipment Class 4 is equivalent to NRC, Quality Group D in accordance with RG 1.26 (Reference 3.2-13). Class D applies to water- and steam-containing non safety-related components that are not part of the RCPB or included in Quality Groups B or C, or RWMS, but are part of systems or portions of systems that contain or may contain radioactive material.

Equipment Class 4 SSCs are classified as NS or seismic category II. The codes and standards for NRC Quality Group D are applied as follows:

• Pressure Vessels	ASME Code, Section VIII, Division 1 (Reference 3.2-19)
• Piping	ASME B31.1 (Reference 3.2-20)
• Pumps	Manufacturers' standards
• Valves	ASME B31.1 (Reference 3.2-20)
• Atmospheric Storage Tanks	API-650 (Reference 3.2-21), AWWA D-100 (Reference 3.2-22), or ASME B96.1 (Reference 3.2-23)
• 0-15 psig Storage Tanks	API-620 (Reference 3.2-24)
• Supports	Manufacturers' standards

3.2.2.5 Other Equipment Classes

Equipment Class 5

Equipment Class 5 is assigned to non safety-related components that are not part of the RWMS and not within the purview of RG 1.26 (Reference 3.2-13).

This equipment class is also assigned to non safety-related structures and structural components, instrumentation, controls, and electrical components.

Equipment Class 5 SSCs are classified NS or seismic category II, and 10 CFR 50, Appendix B (Reference 3.2-8) is not applied. Specific quality assurance program controls are applied to non safety-related SSCs, to a degree consistent with their importance to safety (graded approach), as described in Chapter 17. Codes and standards, as defined in the design bases, are applied to equipment Class 5 components.

Equipment Class 6

Equipment Class 6 is assigned to the components of the RWMS.

The seismic category defined in RG 1.143 (Reference 3.2-10) is applied and 10 CFR 50, Appendix B (Reference 3.2-8) is not applied.

The codes and standards defined in RG 1.143 (Reference 3.2-10), Table 1, are applied to equipment Class 6 components.

Equipment Class 7

Equipment Class 7 is assigned to the system, design, and components of the Fire Protection Program.

The codes and standards applicable to fire protection systems follow the guidance of RG 1.189 (Reference 3.2-11), Section 1.7, and National Fire Protection Association 804 (Reference. 3.2-25), Section 4.6, and are applied for fire protection system design in the US-APWR buildings.

3.2.2.6 Inspection Requirements

Safety-related SSCs built to the requirements of the ASME Code, Section III (Reference 3.2-14), are required by 10 CFR 50.55a (Reference 3.2-12) to have in-service inspections. The ISI program is discussed in Subsection 3.9.6.

3.2.3 Combined License Information

COL 3.2(1) Deleted

COL 3.2(2) Deleted

COL 3.2(3) Deleted

COL 3.2(4) The COL Applicant is to identify the site-specific, safety-related systems and components that are designed to withstand the effects of earthquakes without loss of capability to perform their safety function; and those site-specific, safety-related fluid systems or portions thereof; as well as the applicable industry codes and standards for pressure-retaining components.

COL 3.2(5) The COL Applicant is to identify the equipment class and seismic category of the site-specific, safety-related and non safety-related fluid systems, components (including pressure retaining), and equipment as well as the applicable industry codes and standards.

3.2.4 References

3.2-1 Definitions, Domestic Licensing of Production and Utilization Facilities, Energy. Title 10, Code of Federal Regulations, Part 50.2, U.S. Nuclear Regulatory Commission, Washington, DC.

3.2-2 Design Objectives for Equipment to Control Releases of Radioactive Material in Effluents—Nuclear Power Reactors, Domestic Licensing of Production and Utilization Facilities, Energy. Title 10, Code of Federal Regulations, Part 50.34(a)(1), U.S. Nuclear Regulatory Commission, Washington, DC.

3.2-3 Determination of Exclusion area, Low Population Zone, and Population Center Distance, Reactor Site Criteria, Energy. Title 10, Code of Federal Regulations, Part 100.11, U.S. Nuclear Regulatory Commission, Washington, DC.

3.2-4 General Design Criteria for Nuclear Power Plants, Domestic Licensing of Production and Utilization Facilities, Energy. Title 10, Code of Federal Regulations, Part 50, Appendix A, U.S. Nuclear Regulatory Commission, Washington, DC.

3.2-5 Seismic Design Classification. Regulatory Guide 1.29, Rev. 4, U.S. Nuclear Regulatory Commission, Washington, DC, March 2007.

3.2-6 Earthquake Engineering Criteria for Nuclear Power Plants, Domestic Licensing of Production and Utilization Facilities, Energy. Title 10, Code of Federal Regulations, Part 50, Appendix S, U.S. Nuclear Regulatory Commission, Washington, DC.

3.2-7 Geologic and Seismic Siting Criteria, Reactor Site Criteria, Energy. Title 10, Code of Federal Regulations, Part 100.23, U.S. Nuclear Regulatory Commission, Washington, DC.

3.2-8 Quality Assurance Criteria for Nuclear Power Plants and Fuel Reprocessing Plants, Domestic Licensing of Production and Utilization Facilities, Energy. Title 10, Code of Federal Regulations, Part 50, Appendix B.

3.2-9 Instrument Sensing Lines. Regulatory Guide 1.151, U.S. Nuclear Regulatory Commission, Washington, DC, July 1983.

3.2-10 Design Guidance for Radioactive Waste Management Systems, Structures, and Components Installed in Light-Water-Cooled Nuclear Power Plants. Regulatory Guide 1.143, Rev. 2, U.S. Nuclear Regulatory Commission, Washington, DC, November 2001.

3.2-11 Fire Protection for Nuclear Power Plants. Regulatory Guide 1.189, Rev. 1, U.S. Nuclear Regulatory Commission, Washington, DC, March 2007.

3.2-12 Codes and Standards, Domestic Licensing of Production and Utilization Facilities, Energy. Title 10, Code of Federal Regulations, Part 50.55a, U.S. Nuclear Regulatory Commission, Washington, DC.

3.2-13 Quality Group Classifications and Standards for Water-, Steam-, and Radioactive-Waste-Containing Components of Nuclear Power Plants. Regulatory Guide 1.26, Rev. 4, U.S. Nuclear Regulatory Commission, Washington, DC, March 2007.

3.2-14 Boiler and Pressure Vessel Code. "Section III, Division 1, Nuclear Power Plant Components," American Society of Mechanical Engineers.

3.2-15 Resolution of Generic Issue 70, "Power-Operated Relief Valve and Block Valve Reliability," and Generic Issue 94, "Additional Low-Temperature Overpressure Protection for Light-Water Reactors,", NRC Generic Letter 90-06, June 25, 1990.

3.2-16 System Quality Group Classification, "Design of Structures, Components, Equipment, and Systems," Standard Review Plan for the Review of Safety Analysis Reports for Nuclear Power Plants. NUREG-0800 Standard Review Plan 3.2.2, Rev. 2, U.S. Nuclear Regulatory Commission, Washington, DC, March 2007.

3.2-17 Instrument Lines Penetrating Primary Reactor Containment (Safety Guide 11) Supplement to Safety Guide 11, Backfitting Considerations,. Regulatory Guide 1.11, U.S. Nuclear Regulatory Commission, Washington, DC, March 1971.

3.2-18 Equipment and Floor Drainage System, "Auxiliary Systems," Standard Review Plan for the Review of Safety Analysis Reports for Nuclear Power Plants. NUREG-0800, Standard Review Plan 9.3.3, Rev. 3, U.S. Nuclear Regulatory Commission, Washington, DC, March 2007.

3.2-19 Boiler and Pressure Vessel Code. "Section VIII, Division 1, Pressure Vessels," American Society of Mechanical Engineers.

3.2-20 Power Piping, ASME Code for Pressure Piping, Standards of Pressure Piping. ASME/ANSI B31.1-1989, American Society of Mechanical Engineers/American National Standards Institute.

3.2-21 Welded Steel Tanks for Oil Storage. Revision 1, API-650-80, February 1984.

3.2-22 Welded Steel Tanks for Water Storage. AWWA DI00-84, American Water Works Association.

3.2-23 Welded Aluminum-Alloy Storage Tanks. ANSI B96.1-81, American National Standards Institute.

3.2-24 Recommended Rules for Design and Construction of Large, Welded, Low-Pressure Storage Tanks. API-620-82, Revision 1, April 1985.

3.2-25 Standard for Fire Protection for Advanced Light Water Reactor Electric Generating Plants. NFPA 804, 2006 Edition, National Fire Protection Association, Quincy, MA.

Table 3.2-1 Non-Safety Components Required for Normal Shutdown (Sheet 1 of 2)

Systems	Components
Reactor Coolant System	Reactor Coolant System and oil lift pump
	Pressurizer heater (Control Group)
	Pressurizer spray valve
Chemical and volume control system	Charging pump
	Boric acid transfer pump
	Volume control tank
	Boric acid tank
	Hold up tank
	Regenerative heat exchanger
	Letdown heat exchanger
	Seal water heat exchanger
	Reactor coolant filter
	Seal water injection filter
	Seal water return strainer
	Charging flow control valve
	Seal water injection flow control valve
	Letdown line 1st (2nd) stop valve
	Letdown line inside prestressed concrete containment vessel
	Centrifugal charging pump inlet line volume control tank Side 1st, 2nd isolation valves
	Centrifugal charging pump inlet line boric and tank side isolation valve
	Centrifugal charging pump inlet line refueling water storage auxiliary tank side isolation valves
	Residual heat removal letdown line pressure control valve
	Seal water return line 1st, 2nd isolation valves
Primary Makeup Water System	Primary make-up water pump
	Primary make-up water storage tank
Residual Heat Removal System	CS/residual heat removal cooler outlet flow control valves
	CS/residual heat removal heat exchanger bypass flow control valves
Main Stream and Feedwater System	Main steam relief valves (Normal)
	Turbine bypass valves
	Main feedwater bypass valves
	Steam generator water filling control valves

Table 3.2-1 Non-Safety Components Required for Normal Shutdown (Sheet 2 of 2)

Instrument Air System	Instrument air compressors
Secondary System	Condenser
	Condensate pump
	Deaerator
	Main feedwater pump
Heating, Ventilation, and Air Conditioning	Containment fan cooler unit fan
	Reactor cavity cooling fan
	Control rod drive mechanism cooling fan
	Non-Class 1E electrical room air handling unit fan
	Non-essential chiller units
	Non-essential chilled water pumps

Table 3.2-2 Classification of Mechanical and Fluid Systems, Components, and Equipment (Sheet 1 of 53)

System and Components	Equipment Class	Location	Quality Group	10 CFR 50 Appendix B (Reference 3.2-8)	Codes and Standards(3)	Seismic Category	Notes
Primary System							
1. Reactor Systems							
Fuel assemblies	1	PCCV	A	YES	5	I	
Rod control cluster	1	PCCV	A	YES	5	I	
Burnable poison	1	PCCV	A	YES	5	I	
Neutron source assemblies	1	PCCV	A	YES	5	I	
Upper core support	1	PCCV	A	YES	ASME III, CS	I	
Lower core support	1	PCCV	A	YES	ASME III, CS	I	
Guide tube assemblies	1	PCCV	A	YES	5	I	
Control rod drive mechanism latch housing	1	PCCV	A	YES	1	I	
Control rod drive mechanism rod travel housing	1	PCCV	A	YES	1	I	
2. Reactor Coolant System							
Reactor vessel	1	PCCV	A	YES	1	I	
Reactor vessel head	1	PCCV	A	YES	1	I	
Reactor coolant pump casing	1	PCCV	A	YES	1	I	
Reactor coolant pump main flange	1	PCCV	A	YES	1	I	
Reactor coolant pump thermal barrier	1	PCCV	A	YES	1	I	
Reactor coolant pump thermal barrier heat exchanger	1	PCCV	A	YES	1	I	
Reactor coolant pump #1 seal housing	1	PCCV	A	YES	1	I	
Reactor coolant pump #2 seal housing	2	PCCV	B	YES	2	I	
Reactor coolant pump pressure-retaining bolting	1	PCCV	A	YES	1	I	
Pressurizer	1	PCCV	A	YES	1	I	

Table 3.2-2 Classification of Mechanical and Fluid Systems, Components, and Equipment (Sheet 2 of 53)

System and Components	Equipment Class	Location	Quality Group	10 CFR 50 Appendix B (Reference 3.2-8)	Codes and Standards(3)	Seismic Category	Notes
Pressurizer piping upstream of and including the pressurizer safety valves RCS-VLV-120,121,122,123, safety depressurization valves RCS-MOV-117A,B, and depressurization valves RCS-MOV-119	1	PCCV	A	YES	1	I	
Pressurizer piping downstream of and excluding pressurizer safety valves RCS-VLV-120,121,122,123	4	PCCV	D	N/A	4	II	
Pressurizer piping downstream of and excluding safety depressurization valves RCS-MOV-117A,B	4	PCCV	D	N/A	4	II	
Pressurizer piping downstream of and excluding depressurization valves RCS-MOV-119	4	PCCV	D	N/A	4	II	
Pressurizer piping upstream of and including the loop seal drain stop valves: RCS-VLV-157,158,159,160	2	PCCV	B	YES	2	I	
Pressurizer piping downstream of the loop seal drain stop valve: RCS-VLV-157,158,159,160	4	PCCV	D	N/A	4	NS	
Pressurizer vent piping up to RCS-VLV-154 and the valves RCS-VLV-153 and 154	1	PCCV	A	YES	1	I	
Auxiliary spray TC piping up to RCS-VLV-152 and the valves RCS-VLV-151 and 152	1	PCCV	A	YES	1	I	

Table 3.2-2 Classification of Mechanical and Fluid Systems, Components, and Equipment (Sheet 3 of 53)

System and Components	Equipment Class	Location	Quality Group	10 CFR 50 Appendix B (Reference 3.2-8)	Codes and Standards(3)	Seismic Category	Notes
Reactor vessel head vent piping upstream of and including the reactor vessel head vent valves RCS-MOV-002A, B,003A,B	1	PCCV	A	YES	1	I	
Reactor vessel head vent line piping downstream of and excluding the reactor vessel head vent valves RCS-MOV-003A,B	4	PCCV	D	YES	N/A	NS	
Letdown line piping upstream of and including the letdown line stop valves RCS-VLV-021	1	PCCV	A	YES	1	I	
Reactor coolant piping drain piping upstream of and including the second drain stop valve RCS-VLV-023A, B, C, D	1	PCCV	A	YES	1	I	
Cavity / reactor coolant system water level meter piping upstream of and including the stop valves RCS-VLV-024.025	1	PCCV	A	YES	1	I	
Steam generator tube side	1	PCCV	A	YES	1	I	
Steam generator shell side	2	PCCV	B	YES	2	I	
Pressurizer safety valves RCS-VLV-120, 121, 122, 123	1	PCCV	A	YES	1	I	
Safety depressurization valves RCS-MOV-117A, B	1	PCCV	A	YES	1	I	
Safety depressurization valve block valves RCS-MOV-116A, B	1	PCCV	A	YES	1	I	
Depressurization valves for severe accident RCS-MOV-118, 119	1	PCCV	A	YES	1	I	

Table 3.2-2 Classification of Mechanical and Fluid Systems, Components, and Equipment (Sheet 4 of 53)

System and Components	Equipment Class	Location	Quality Group	10 CFR 50 Appendix B (Reference 3.2-8)	Codes and Standards(3)	Seismic Category	Notes
Pressurizer spray valves RCS-PCV451A, B	1	PCCV	A	YES	1	I	
Pressurizer spray block valves RCS-MOV-111A, B	1	PCCV	A	YES	1	I	
Reactor vessel head vent valves RCS-MOV-002A, B, 003A,B	1	PCCV	A	YES	1	I	
Letdown line stop valve RCS-VLV-021	1	PCCV	A	YES	1	I	
Reactor coolant piping first drain stop valves RCS-VLV-022A, B, C, D	1	PCCV	A	YES	1	I	
Reactor coolant piping second drain stop valves RCS-VLV-023A, B, C, D	1	PCCV	A	YES	1	I	
Cavity/reactor coolant system water level meter line stop valve RCS-VLV-024,025	1	PCCV	A	YES	1	I	
Pressurizer spray bypass valves RCS-VLV-112A,B	1	PCCV	A	YES	1	I	
Reactor coolant piping	1	PCCV	A	YES	1	I	
Pressurizer surge line piping	1	PCCV	A	YES	1	I	
Pressurizer spray line piping	1	PCCV	A	YES	1	I	
Pressurizer relief tank	4	PCCV	D	N/A	4	II	
Reactor coolant system piping and valves related to pressurizer relief tank excluding containment isolation valves and piping between valves	4	PCCV R/B	D	N/A	4	NS	

Table 3.2-2 Classification of Mechanical and Fluid Systems, Components, and Equipment (Sheet 5 of 53)

System and Components	Equipment Class	Location	Quality Group	10 CFR 50 Appendix B (Reference 3.2-8)	Codes and Standards(3)	Seismic Category	Notes
Following containment isolation valves and piping between valves: RCS-AOV-147, 148 RCS-AOV-132, RCS-VLV-133 RCS-AOV-138, RCS-VLV-139, 140	2	PCCV R/B	B	YES	2	I	
3. Chemical and Volume Control System							
Charging pumps	3	R/B	C	YES	3	I	
Boric acid transfer pumps	4	A/B	D	N/A	4	NS	
Boric acid evaporator feed pumps	4	A/B	D	N/A	4	NS	
Volume control tank	4	R/B	D	N/A	4	NS	
Holdup tanks	4	A/B	D	N/A	4	NS	
Boric acid batching tank	4	A/B	D	N/A	4	NS	
Boric acid tanks	4	A/B	D	N/A	4	NS	
Resin fill tank	4	A/B	D	N/A	4	NS	
Chemical mixing tank	4	R/B	D	N/A	4	NS	
Reactor coolant pump purge water head tank	4	PCCV	D	N/A	4	NS	
Regenerative heat exchanger	3	PCCV	C	YES	3	I	
Letdown heat exchanger –tube side	3	PCCV	C	YES	3	I	
Letdown heat exchanger – component cooling water side	2	PCCV	B	YES	2	I	
Seal water heat exchanger –tube side	4	R/B	D	N/A	4	NS	
Seal water heat exchanger – component cooling water side	4	R/B	D	N/A	4	NS	
Excess letdown heat exchanger	3	PCCV	C	YES	3	I	
Excess letdown heat exchanger – component cooling water side	2	PCCV	B	YES	2	I	

Table 3.2-2 Classification of Mechanical and Fluid Systems, Components, and Equipment (Sheet 6 of 53)

System and Components	Equipment Class	Location	Quality Group	10 CFR 50 Appendix B (Reference 3.2-8)	Codes and Standards(3)	Seismic Category	Notes
Reactor coolant filters	4	A/B	D	N/A	4	NS	
Seal water injection filters	4	A/B	D	N/A	4	NS	
Boric acid filter	4	A/B	D	N/A	4	NS	
Boric aid evaporator feed demineralizer filter	4	A/B	D	N/A	4	NS	
Mixed bed demineralizer inlet filters	4	A/B	D	N/A	4	NS	
Seal water return strainer	4	R/B	D	N/A	4	NS	
Mixed bed demineralizers	4	A/B	D	N/A	4	NS	
Cation bed demineralizer	4	A/B	D	N/A	4	NS	
Boric acid evaporator feed demineralizer	4	A/B	D	N/A	4	NS	
Deborating demineralizers	4	A/B	D	N/A	4	NS	
Letdown orifices	3	PCCV	C	YES	3	I	
Charging pump minimum flow orifices	3	R/B	C	YES	3	I	
Boric acid transfer pump minimum flow orifices	4	A/B	D	N/A	4	NS	
Boric acid evaporator feed pumps minimum flow orifices	4	A/B	D	N/A	4	NS	
Charging flow control orifice	3	R/B	C	YES	3	I	
Seal water flow control orifice	3	R/B	C	YES	3	I	
Chemical mixing tank orifice	4	R/B	D	N/A	4	NS	
Boric acid evaporator	4	A/B	D	N/A	4	NS	
Boric acid blender	4	R/B	D	N/A	4	NS	
Letdown line and valves from reactor coolant system to and including valve CVS-LCV-452 prior to regenerative heat exchanger.	1	PCCV	A	YES	1	I	

Table 3.2-2 Classification of Mechanical and Fluid Systems, Components, and Equipment (Sheet 7 of 53)

System and Components	Equipment Class	Location	Quality Group	10 CFR 50 Appendix B (Reference 3.2-8)	Codes and Standards(3)	Seismic Category	Notes
Letdown line piping and valves from and excluding the valve CVS-LCV-452 prior to regenerative heat exchanger to the following valves: Letdown line drain valve CVS-VLV-602 (including the valve) Residual Heat Removal System valves (2 each) (excluding the valves) RHS-AOV-024A,D Containment isolation valve (excluding the valve) CVS-AOV-005 Letdown line relief valve CVS-VLV-002 (including the valve) Letdown heat exchanger tube side drain valve CVS-VLV-606 (including the valve)	3	PCCV	C	YES	3	I	
Chemical and volume control system containment isolation valves and piping between the valves.	2	PCCV R/B	B	YES	2	I	
Excess letdown piping and valves from reactor coolant system to and including valve CVS-AOV-222 just prior to excess letdown heat exchanger.	1	PCCV	A	YES	1	I	

Table 3.2-2 Classification of Mechanical and Fluid Systems, Components, and Equipment (Sheet 8 of 53)

System and Components	Equipment Class	Location	Quality Group	10 CFR 50 Appendix B (Reference 3.2-8)	Codes and Standards(3)	Seismic Category	Notes
Excess letdown piping and valves from but excluding valve CVS-AOV-222 just prior to excess letdown heat exchanger to and excluding containment isolation valves CVS-MOV-203 and CVS-VLV-202. This includes piping related to reactor coolant pump seal water return line to the following valves. 4 valves CVS-AOV-192A,B,C,D (excluding the valves) Seal water return line relief valve CVS-VLV-201 (including the valve)	3	PCCV	C	YES	3	I	
Excess letdown heat exchanger drain piping and valve to and including valve CVS-VLV-685	3	PCCV	C	YES	3	I	
Reactor coolant pump purge water piping and valves up to but excluding reactor coolant pump #2 seal housings	4	PCCV	D	N/A	4	NS	
Letdown line piping and valves outside containment from and excluding the containment isolation valve CVS-AOV-006 to and including the three way valve CVS-TCV-104	4	R/B A/B	D	N/A	4	NS	

Table 3.2-2 Classification of Mechanical and Fluid Systems, Components, and Equipment (Sheet 9 of 53)

System and Components	Equipment Class	Location	Quality Group	10 CFR 50 Appendix B (Reference 3.2-8)	Codes and Standards(3)	Seismic Category	Notes
Piping and valves contained within the demineralizer subsystem of chemical and volume control system. This subsystem branches off the letdown line between the two three way valves CVS-TCV-104 and CVS-LCV-121A. It includes reactor coolant purification filters and demineralizers, and deborating demineralizers	4	A/B	D	N/A	4	NS	
Letdown line piping and valves outside containment from the three way valve CVS-LCV-121A to the volume control tank	4	R/B A/B	D	N/A	4	NS	
Reactor coolant pump seal water return piping and valves outside containment from containment isolation valve CVS-MOV-204 to all other connections in chemical and volume control system	4	R/B	D	N/A	4	NS	
Reactor coolant pump seal water return piping and valves from reactor coolant pump seal to and including 4 valves CVS-AOV-192A,B,C,D	2	PCCV	B	YES	2	I	
Reactor coolant pump seal water return line drain piping and valves for the strainer and the seal water heat exchanger including the 2 valves CVS-VLV-678 and CVS-VLV-681.	4	R/B	D	N/A	4	NS	

Table 3.2-2 Classification of Mechanical and Fluid Systems, Components, and Equipment (Sheet 10 of 53)

System and Components	Equipment Class	Location	Quality Group	10 CFR 50 Appendix B (Reference 3.2-8)	Codes and Standards(3)	Seismic Category	Notes
Reactor coolant pump seal water injection piping and valves excluding containment isolation valves, piping between these valves, piping downstream of CVS-VLV-180A, B, C, D (including valves), and seal water injection filter line valves and piping between and excluding CVS-VLV-168 and CVS-VLV-173	3	R/B PCCV	C	YES	3	I	
Reactor coolant pump seal water injection piping and valves downstream of including valves CVS-VLV-180A, B, C, D	1	PCCV	A	YES	1	I	
Seal water injection filter line valves and piping between and excluding CVS-VLV-168 and CVS-VLV-173	4	R/B A/B	D	N/A	4	NS	
Charging lines from and including valves CVS-VLV-158 and CVS-AOV-159 to their penetration into the reactor coolant system	1	PCCV	A	YES	1	I	
Auxiliary spray line from and including valves CVS-AOV-155 to the penetration into the RCS	1	PCCV	A	YES	1	I	

Table 3.2-2 Classification of Mechanical and Fluid Systems, Components, and Equipment (Sheet 11 of 53)

System and Components	Equipment Class	Location	Quality Group	10 CFR 50 Appendix B (Reference 3.2-8)	Codes and Standards(3)	Seismic Category	Notes
Charging line and auxiliary spray line piping and valves between the following valves (excluding the valves) downstream of the regenerative heat exchanger: CVS-VLV-158 CVS-AOV-159 CVS-AOV-155 And the following valves: Charging line drain valve CVS-VLV-655 (including the valve) Containment isolation valve CVS-VLV-153 (excluding the valve)	3	PCCV	C	YES	3	I	
Charging line piping and valves from and including the volume control outlet valve CVS-LCV-121B to charging pump minimum flow orifices and following valves: CVS-VLV-213 (including valve) CVS-VLV-585 (including valve) CVS-VLV-557 (including valve) CVS-VLV-163 and 164 (excluding valves) CVS-MOV-152 (excluding valve) CVS-VLV-591 and 593 (including valves)	3	R/B	C	YES	3	I	
Volume control tank outlet line to CVS-LCV-121B (excluding valve)	4	R/B	D	N/A	4	NS	
Volume control tank drain piping and valves	4	R/B	D	N/A	4	NS	

Table 3.2-2 Classification of Mechanical and Fluid Systems, Components, and Equipment (Sheet 12 of 53)

System and Components	Equipment Class	Location	Quality Group	10 CFR 50 Appendix B (Reference 3.2-8)	Codes and Standards(3)	Seismic Category	Notes
Chemical and volume control system make up piping and valves excluding valves CVS-FCV-218,219 and piping between these valves	4	R/B A/B	D	N/A	4	NS	
Chemical and volume control system piping and valves on the chemical mixing tank side of and excluding the valve CVS-VLV-585	4	R/B A/B	D	N/A	4	NS	
Chemical and volume control system piping and valves related to the chemical mixing tank and the blender	4	R/B	D	N/A	4	NS	
Chemical and volume control system piping and valves related to the boric acid tanks	4	A/B	D	N/A	4	NS	
Chemical and volume control system piping and valves related to the boric acid batching tank to and excluding valve CVS-VLV-525	4	A/B	D	N/A	4	NS	
Chemical and volume control system piping and valves related to the boric acid transfer sub-system from boric acid tanks through the boric acid transfer pumps to and excluding valve CVS-VLV-557	4	R/B A/B	D	N/A	4	NS	

Table 3.2-2 Classification of Mechanical and Fluid Systems, Components, and Equipment (Sheet 13 of 53)

System and Components	Equipment Class	Location	Quality Group	10 CFR 50 Appendix B (Reference 3.2-8)	Codes and Standards(3)	Seismic Category	Notes
Chemical and volume control system piping and valves related to the holdup tanks and the boric acid evaporator feed pumps	4	A/B	D	N/A	4	NS	
Chemical and volume control system piping and valves related to the boric acid evaporator and the boric acid evaporator feed demineralizer.	4	A/B	D	N/A	4	NS	
Chemical and volume control system piping and valves related to the primary makeup water supply isolation CVS-FCV-223A, 219 and CVS-VLV-581	3	R/B	C	YES	3	I	
4. Safety Injection System							
Safety injection pumps	2	R/B	B	YES	2	I	
Safety injection piping and valves between the System penetration and including the second check valve SIS-VLV-012A, B, C, D upstream of the direct Vessel Injection penetration	1	PCCV	A	YES	1	I	
Safety injection piping and valves upstream of and excluding the second check valve SIS-VLV-012A, B, C, D upstream of the direct Vessel Injection penetration	2	PCCV, R/B	B	YES	2	I	
Hot leg injection piping downstream of and including the motor operated valves SIS-MOV-014A, B, C, D	1	PCCV	A	YES	1	I	

Table 3.2-2 Classification of Mechanical and Fluid Systems, Components, and Equipment (Sheet 14 of 53)

System and Components	Equipment Class	Location	Quality Group	10 CFR 50 Appendix B (Reference 3.2-8)	Codes and Standards(3)	Seismic Category	Notes
Hot leg injection piping upstream of but excluding the motor operated valves SIS-MOV-014A, B, C, D	2	PCCV	B	YES	2	I	
Accumulator	2	PCCV	B	YES	2	I	
Accumulator piping and valves on the reactor coolant system side of and including the second check valves SIS-VLV-102A, B, C, D	1	PCCV	A	YES	1	I	
Accumulator piping and valves on the accumulator side of but excluding the second check valves SIS-VLV-102A, B, C, D	2	PCCV	B	YES	2	I	
Emergency core cooling / containment spray strainer	2	PCCV	B	YES	5	I	
Emergency letdown isolation valves SIS-MOV-031B, 031D, 032B, 032D and piping between valves	1	PCCV	A	YES	1	I	
Emergency let down piping from and excluding valves SIS-MOV-032B,D	2	PCCV	B	YES	2	I	
Accumulator N2 vent piping up and including valves SIS-AOV-114,SIS-VLV-116, SIS-MOV-121A,B and SIS-HCV-917	2	PCCV	B	YES	2	I	

Table 3.2-2 Classification of Mechanical and Fluid Systems, Components, and Equipment (Sheet 15 of 53)

System and Components	Equipment Class	Location	Quality Group	10 CFR 50 Appendix B (Reference 3.2-8)	Codes and Standards(3)	Seismic Category	Notes
Safety injection system valve leak test piping of the class1 valves between test line isolation valves (not including) , SIS-HCV-989(not including) and SIS-VLV-203A,B (including)	3	PCCV	C	YES	3	I	
Safety injection system valve leak test piping of the class2 valves between test line isolation valves (not including) and SIS-VLV-216A,B (not including)	4	PCCV	D	N/A	4	NS	
5. Residual Heat Removal System(RHRS)							
Containment Spray/Residual Heat Removal pumps	2	R/B	B	YES	2	I	
Containment spray/residual heat removal heat exchangers - tube side	2	R/B	B	YES	2	I	
Containment spray/residual heat removal heat exchangers - component cooling water side	3	R/B	C	YES	3	I	
Residual heat removal suction piping and valves on the reactor coolant system side between the hot legs, up to and including the second motor operated valves RHS-MOV-002A, B, C, D	1	PCCV	A	YES	1	I	
residual heat removal discharge piping and valves on the reactor coolant system side between the cold legs, up to and including the second check valves RHS-VLV-027A,B,C,D	1	PCCV	A	YES	1	I	

Table 3.2-2 Classification of Mechanical and Fluid Systems, Components, and Equipment (Sheet 16 of 53)

System and Components	Equipment Class	Location	Quality Group	10 CFR 50 Appendix B (Reference 3.2-8)	Codes and Standards(3)	Seismic Category	Notes
Residual heat removal system piping and valves on the residual heat removal system side from and excluding the second motor operated valves RHS-MOV-002A, B, C, D to and excluding the second check valves RHS-VLV-027A,B,C,D	2	PCCV R/B	B	YES	2	I	
Residual heat removal system piping and valves not mentioned above up to and including the valves interfacing with systems of a lower classification.	2	PCCV R/B	B	YES	2	I	
6. Emergency Feedwater System (EFWS)							
Emergency feedwater pumps	3	R/B	C	YES	3	I	
Emergency feedwater pits	3	R/B	C	YES	5	I	
Emergency feedwater pump turbine steam drain pots	4	R/B	D	N/A	4	NS	
Emergency feedwater pump discharge piping and valves up to and excluding emergency feedwater isolation valves EFS-MOV-019A,B,C,D	3	R/B	C	YES	3	I	
Emergency feedwater pump suction piping and valves from Emergency feedwater pits	3	R/B	C	YES	3	I	

Table 3.2-2 Classification of Mechanical and Fluid Systems, Components, and Equipment (Sheet 17 of 53)

System and Components	Equipment Class	Location	Quality Group	10 CFR 50 Appendix B (Reference 3.2-8)	Codes and Standards(3)	Seismic Category	Notes
Emergency feedwater system containment isolation valves EFS-MOV-101A,B,C,D, EFS-MOV-019A,B,C,D	2	R/B	B	YES	2	I	
(Deleted)							
Emergency feedwater pump miniflow and fullflow piping and valves to emergency feedwater pit	3	R/B	C	YES	3	I	
Emergency feedwater pump discharge tie line piping and valves	3	R/B	C	YES	3	I	
Emergency feedwater pit water supply piping and valves from Emergency feedwater pit up to and including EFS-VLV-001A,B	3	R/B	C	YES	3	I	
Emergency feedwater pump suction piping and valves from and including the valve EFS-VLV-006A,B	3	R/B	C	YES	3	I	
(Deleted)							
Emergency feedwater pit sampling piping up to and including EFS-VLV-041A,B	3	R/B	C	YES	3	I	
Emergency feedwater pit overflow piping	4	R/B	D	N/A	4	NS	
Emergency feedwater pit drain piping and valves up to and including EFS-VLV-042 A, B	3	R/B	C	YES	3	I	
Water supply piping and valves from emergency feedwater pits to spent fuel pit up to and including EFS-VLV-031	3	R/B	C	YES	3	I	

Table 3.2-2 Classification of Mechanical and Fluid Systems, Components, and Equipment (Sheet 18 of 53)

System and Components	Equipment Class	Location	Quality Group	10 CFR 50 Appendix B (Reference 3.2-8)	Codes and Standards(3)	Seismic Category	Notes
Emergency feedwater supply piping to spent fuel pit between and excluding EFS-VLV-031 and SFS-VLV-023	4	R/B	D	N/A	4	NS	
Turbine driven emergency feedwater pump steam supply piping and valves from and excluding EFS-MOV-101A,B,C,D to the pumps	3	R/B	C	YES	3	I	
Turbine driven emergency feedwater pump steam supply piping drain piping and valves up to and including EFS-VLV-109A,B	3	R/B	C	YES	3	I	
Turbine driven emergency feedwater pump steam supply piping warming piping and valves	3	R/B	C	YES	3	I	
Turbine driven emergency feedwater pump steam supply piping drain piping and valves up to and including EFS-VLV-117A,B, 114A,B, 111A,B, LCV-3776,3777,3778,3786,3787,3788	3	R/B	C	YES	3	I	
Turbine driven emergency feedwater pump steam supply piping drain piping and valves downstream and excluding EFS-VLV-117A,B,114A,B, 111A,B, LCV-3776,3777,3778,3786,3787,3788	4	R/B	D	N/A	4	NS	
Turbine driven emergency feedwater pump steam exhaust piping	4	R/B	D	N/A	4	NS	

Table 3.2-2 Classification of Mechanical and Fluid Systems, Components, and Equipment (Sheet 19 of 53)

System and Components	Equipment Class	Location	Quality Group	10 CFR 50 Appendix B (Reference 3.2-8)	Codes and Standards(3)	Seismic Category	Notes
Turbine driven emergency feedwater pump steam exhaust piping drain piping	4	R/B	D	N/A	4	NS	
Emergency feedwater pump turbine steam drain pot drain piping and valves	4	R/B	D	N/A	4	NS	
Emergency feedwater pump turbine steam drain pot cooling water supply piping and valves	4	R/B	D	N/A	4	NS	
7. Condensate and Feedwater System							
The piping upstream of the main feedwater isolation valves NFS-VLV-512A, B, C, D to the first piping restraint at the interface between the R/B and T/B	3	R/B	C	YES	3	I	
Main feedwater piping and valves to the steam generators from and including the main feedwater isolation valves NFS-VLV-512A, B, C, D	2	R/B PCCV	B	YES	2	I	
Main feedwater piping upstream of the restraint at the interface between the R/B and the T/B	4	T/B	D	N/A	4	NS	
Emergency feedwater piping from and excluding EFS-MOV-019A,B,C,D	2	R/B	B	YES	2	I	
High pressure cleanup piping and valves in the R/B	3	R/B	C	YES	3	I	
High pressure cleanup piping and valves out of the R/B	4	T/B	D	N/A	4	NS	

Table 3.2-2 Classification of Mechanical and Fluid Systems, Components, and Equipment (Sheet 20 of 53)

System and Components	Equipment Class	Location	Quality Group	10 CFR 50 Appendix B (Reference 3.2-8)	Codes and Standards(3)	Seismic Category	Notes
Steam generator water filling piping and valves in the R/B	2	R/B	C	YES	3	I	
Steam generator water filling piping and valves out of the R/B	4	T/B	D	N/A	4	NS	
8. Main Steam Supply System (MSS)							

Table 3.2-2 Classification of Mechanical and Fluid Systems, Components, and Equipment (Sheet 21 of 53)

System and Components	Equipment Class	Location	Quality Group	10 CFR 50 Appendix B (Reference 3.2-8)	Codes and Standards(3)	Seismic Category	Notes
Main steam piping and valves including branch pipe from steam generators up to and including the following valves: 4 Nitrogen supply piping valves NMS-VLV-531A, B, C, D Main steam isolation valves NMS-AOV-515A, B, C, D Main steam bypass isolation valves NMS-HCV-3615, 3625, 3635, 3645 Main steam relief valves NMS-PCV-465,475,485,495 Main steam depressurization valves NMS-MOV-508A,B,C,D Main steam safety valves NMS-VLV-509A,B,C,D, 510A,B,C,D , 511A,B,C,D, 512A,B,C,D,513A,B,C,D, 514A,B,C,D Main steam drain isolation valves NMS-MOV-701A,B,C,D	2	R/B PCCV	B	YES	2	I	

Table 3.2-2 Classification of Mechanical and Fluid Systems, Components, and Equipment (Sheet 22 of 53)

System and Components	Equipment Class	Location	Quality Group	10 CFR 50 Appendix B (Reference 3.2-8)	Codes and Standards(3)	Seismic Category	Notes
Branch piping from the main steam piping to the turbine driven emergency feedwater system pump turbines up to and excluding EFS-MOV-101A,B,C,D	2	R/B	B	YES	2	I	
Main steam drain piping and valves located upstream of main steam isolation valves downstream and excluding the main steam drain isolation valves in the R/B.	3	R/B	C	YES	3	I	
Main steam piping downstream of main steam isolation valves and main steam bypass isolation valves up to and including the first restraint at the interface between the R/B and the T/B	3	R/B	C	YES	3	I	
Main steam safety valves discharge piping in the R/B	3	R/B	C	YES	3	I	
Main steam piping downstream of the main steam relief valves and main steam depressurization valves in the R/B.	3	R/B	C	YES	3	I	
Main steam safety valves discharge piping out of the R/B	4	O/B	D	N/A	4	NS	
MSS piping downstream of the main steam relief valves and main steam depressurization valves out of the R/B	4	O/B	D	N/A	4	NS	

Table 3.2-2 Classification of Mechanical and Fluid Systems, Components, and Equipment (Sheet 23 of 53)

System and Components	Equipment Class	Location	Quality Group	10 CFR 50 Appendix B (Reference 3.2-8)	Codes and Standards(3)	Seismic Category	Notes
Turbine driven emergency feedwater pump steam supply piping drain piping and valves downstream and excluding EFS-VLV-109A,D	3	R/B	C	YES	3	I	
Main steam piping from the restraint at the interface between the R/B and the T/B to the turbine	4	T/B	D	N/A	4	NS	
Main steam equalization piping	4	T/B	D	N/A	4	NS	
Main steam drain piping and valves in the turbine building	4	T/B	D	N/A	4	NS	
Nitrogen supply piping and valves up to and excluding NMS-VLV-531A,B,C,D	4	T/B	D	N/A	4	NS	
Turbine bypass valves NMS-TCV-500A,B,C,D,E,F,G,H,J,K,L,M.N,P,Q	4	T/B	D	N/A	4	NS	
9. Containment Spray System (CSS)							
Spray nozzles	2	PCCV	B	YES	2	I	
Containment spray system piping and valves	2	PCCV R/B	B	YES	2	I	
10. Post Accident pH Control System(PHS)							
NaTB basket	2	PCCV	B	YES	5	I	
NaTB solution transfer piping	2	PCCV	B	YES	2	I	
11. Component Cooling Water System (CCWS)							
Component cooling water pumps	3	R/B	C	YES	3	I	
Component cooling water surge tanks	3	R/B	C	YES	3	I	
Component cooling water heat exchangers	3	R/B	C	YES	3	I	

Table 3.2-2 Classification of Mechanical and Fluid Systems, Components, and Equipment (Sheet 24 of 53)

System and Components	Equipment Class	Location	Quality Group	10 CFR 50 Appendix B (Reference 3.2-8)	Codes and Standards(3)	Seismic Category	Notes
Component cooling water supply, return lines piping and valves excluding the following; Component cooling water system containment isolation valves and piping between the valves Component cooling water supply, return lines piping and valves between and excluding the valves NCS-VLV-033A and 034A	3	R/B	C	YES	3	I	
Component cooling water supply, return lines piping and valves excluding the following; Component cooling water system containment isolation valves and piping between the valves Component cooling water supply, return lines piping and valves between and excluding the valves NCS-VLV-033B and 034B	3	R/B	C	YES	3	I	

Table 3.2-2 Classification of Mechanical and Fluid Systems, Components, and Equipment (Sheet 25 of 53)

System and Components	Equipment Class	Location	Quality Group	10 CFR 50 Appendix B (Reference 3.2-8)	Codes and Standards(3)	Seismic Category	Notes
Component cooling water supply, return lines piping and valves between and excluding the valves NCS-VLV-033A and 034A, excluding the following; Component cooling water system containment isolation valves and piping between the valves Component cooling water system piping and valves between and including the valve NCS-AOV-661A and NCS-VLV-671A Component cooling water system piping and valves between and including the valve NCS-AOV-601 and NCS-VLV-653	4	R/B	D	N/A	4	II	
Component cooling water supply, return lines piping and valves between and excluding the valves NCS-VLV-033B and 034B, excluding the following; Component cooling water system containment isolation valves and piping between the valves Component cooling water system piping and valves between and including the valve NCS-AOV-661B and NCS-VLV-671B	4	R/B	D	N/A	4	II	

Table 3.2-2 Classification of Mechanical and Fluid Systems, Components, and Equipment (Sheet 26 of 53)

System and Components	Equipment Class	Location	Quality Group	10 CFR 50 Appendix B (Reference 3.2-8)	Codes and Standards(3)	Seismic Category	Notes
Component cooling water system piping and valves related to the excess letdown heat exchanger inside containment between and including the valves NCS-MOV-511,517, VLV-513	2	PCCV, R/B	B	YES	2	I	
Component cooling water system piping and valves related to the letdown heat exchanger inside containment between and including the valves NCS-MOV-531,537, VLV-533	2	PCCV R/B	B	YES	2	I	
Component cooling water system piping and valves between and including the containment isolation valves NCS-MOV-402A,436A,438A,445A,447A,448A and NCS-VLV-403A,437A	2	PCCV R/B	B	YES	2	I	
Component cooling water piping and valves between and including the containment isolation valves NCS-MOV-402B,436B,438B,445B,447B,448B and NCS-VLV-403B,437B	2	PCCV R/B	B	YES	2	I	
Component cooling water system piping and valves related to components installed in auxiliary building from and excluding isolation valve NCS-AOV-602 up to and excluding stop valve NCS-VLV-651	4	A/B R/B	D	N/A	4	NS	

Table 3.2-2 Classification of Mechanical and Fluid Systems, Components, and Equipment (Sheet 27 of 53)

System and Components	Equipment Class	Location	Quality Group	10 CFR 50 Appendix B (Reference 3.2-8)	Codes and Standards(3)	Seismic Category	Notes
Component cooling water system piping and valves related to components installed in turbine building from and excluding isolation valves NCS-AOV-662A,B up to and excluding stop valves NCS-VLV-669A,B	4	T/B R/B	D	N/A	4	NS	
Component cooling water system piping and valves related to reactor coolant pumps between the containment isolation valves NCS-MOV-436A,447A (excluding) and NCS-VLV-403A,437A (excluding) and the valves NCS-VLV-406A,B,435A (including)	3	PCCV	C	YES	3	I	
Component cooling water system piping and valves related to reactor coolant pumps between the containment isolation valves NCS-MOV-436B,447B (excluding) and NCS-VLV-403B,437B (excluding) and the valves NCS-VLV-406C,D,435B (including)	3	PCCV	C	YES	3	I	
Component cooling water system piping and valves between and including the valves NCS-AOV-601 and 602	3	R/B	C	YES	3	I	

Table 3.2-2 Classification of Mechanical and Fluid Systems, Components, and Equipment (Sheet 28 of 53)

System and Components	Equipment Class	Location	Quality Group	10 CFR 50 Appendix B (Reference 3.2-8)	Codes and Standards(3)	Seismic Category	Notes
Component cooling water system piping and valves between and including the valves NCS-VLV-651 and 653	3	R/B	C	YES	3	I	
Component cooling water system piping and valves between and including the valves NCS-AOV-661A,B and 662A,B	3	R/B	C	YES	3	I	
Component cooling water system piping and valves between and including the valves NCS-VLV-669A,B and 671A,B	3	R/B	C	YES	3	I	
Component cooling water system Piping from component cooling water surge tank to and including the valve(NCS-VLV-003A,NCS-RCV-056A,NCS-PCV-1202,NCS-VLV-045A,NCS-VLV-047A)	3	R/B	C	YES	3	I	
Component cooling water system Piping from component cooling water surge tank to and including the valve(NCS-VLV-003B,NCS-RCV-056B,NCS-PCV-1212,NCS-VLV-045B,NCS-VLV-047B)	3	R/B	C	YES	3	I	
Component cooling water surge tank surge line piping	3	R/B	C	YES	3	I	
Makeup line piping and valves from and including the valves NCS-VLV-051A,B and 054A,B up to and excluding the valves NCS-LCV-1200,1210	4	R/B	D	N/A	4	II	

Table 3.2-2 Classification of Mechanical and Fluid Systems, Components, and Equipment (Sheet 29 of 53)

System and Components	Equipment Class	Location	Quality Group	10 CFR 50 Appendix B (Reference 3.2-8)	Codes and Standards(3)	Seismic Category	Notes
Makeup line piping and valves from and including the valves NCS-VLV-061A,B up to and excluding the valves NCS-VLV-062A,B	4	R/B	D	N/A	4	II	
Makeup line piping and valves from and including the valves NCS-VLV-065A,B up to and including the valves NCS-LCV-1200,1210 and NCS-VLV-062A,B	3	R/B	C	YES	3	I	
Nitrogen gas supply line piping and valves from and including the valves NCS-VLV-041A,B up to and excluding the valves NCS-PCV-1202,1212 and NCS-VLV-045A,B	5	R/B	N/A	N/A	4	NS	
Chemical addition line piping and valves up to and excluding the valves NCS-VLV-047A,B	5	R/B	N/A	N/A	4	NS	
12. Spent Fuel Pit Cooling and Purification System (SPFCS)							
Spent fuel pit pumps	3	R/B	C	YES	3	I	
Spent fuel pit heat exchangers	3	R/B	C	YES	3	I	
Spent fuel pit filters	4	A/B	D	N/A	4	NS	
Spent fuel pit strainers	4	A/B	D	N/A	4	NS	
Spent fuel pit demineralizers	4	A/B	D	N/A	4	NS	

Table 3.2-2 Classification of Mechanical and Fluid Systems, Components, and Equipment (Sheet 30 of 53)

System and Components	Equipment Class	Location	Quality Group	10 CFR 50 Appendix B (Reference 3.2-8)	Codes and Standards(3)	Seismic Category	Notes
Spent fuel pit cooling piping and valves up to and including the following valves: Primary makeup line isolation valve SFS-VLV-026,027 and SFS-VLV-030,031,032 Purification line isolation valves SFS-VLV-101A,B	3	R/B	C	YES	3	I	
Spent fuel pit purification piping and valves from and excluding valve SFS-VLV-101A, B up to excluding valve SFS-VLV-133A,B, A,B-Purification crosstie piping and valves	4	R/B A/B	D	N/A	4	NS	
Spent fuel pit cooling piping and valves from and excluding RHS-VLV-032A,D	3	R/B	C	YES	3	I	
Spent fuel pit cooling piping and valves from and excluding RHS-VLV-033A,D	3	R/B	C	YES	3	I	
Water supply piping and valves from emergency feedwater pits from and including SFS-VLV-023 but excluding SFS-VLV-024	4	R/B	D	N/A	4	NS	
Water supply piping and valves from emergency feedwater pits to spent fuel pit from and including SFS-VLV-024	3	R/B	C	YES	3	I	
Water supply piping and valves from demineralized water storage tank from and including SFS-VLV-025 up to but excluding SFS-VLV-026	4	R/B	D	N/A	4	NS	

Table 3.2-2 Classification of Mechanical and Fluid Systems, Components, and Equipment (Sheet 31 of 53)

System and Components	Equipment Class	Location	Quality Group	10 CFR 50 Appendix B (Reference 3.2-8)	Codes and Standards(3)	Seismic Category	Notes
Spent fuel pit purification line return piping to spent fuel pit from and including valves SFS-VLV-133A,B	3	R/B	C	YES	3	I	
Spent fuel pit demineralizer piping and valves within the following boundaries: A,B-Main purification line-resin backwashing/primary makeup water line junction points; From and including valves SFS-VLV-141A,B; Up to and including valves SFS-VLV-165A,B; A,B-Demineralizer upstream and downstream piping up to and including valves SFS-VLV-153A,B	4	A/B	D	N/A	4	NS	
13. Essential Service Water System (ESWS)							
Essential service water pumps	3	UHSRS	C	YES	3	I	
Essential service water pump outlet strainers	3	UHSRS	C	YES	3	I	
Component cooling water heat exchanger inlet strainers	3	R/B	C	YES	3	I	
Essential service water supply header piping and valves	3	UHSRS ESWPT	C	YES	3	I	
Essential service water return header piping and valves	3	UHSRS ESWPT	C	YES	3	I	
Essential service water supply line piping and valves to component cooling water heat exchangers	3	R/B ESWPT	C	YES	3	I	
Essential service water return line piping and valves from component cooling water heat exchangers	3	R/B ESWPT	C	YES	3	I	

Table 3.2-2 Classification of Mechanical and Fluid Systems, Components, and Equipment (Sheet 32 of 53)

System and Components	Equipment Class	Location	Quality Group	10 CFR 50 Appendix B (Reference 3.2-8)	Codes and Standards(3)	Seismic Category	Notes
Essential service water supply line piping and valves to essential chiller units	3	PS/B ESWPT	C	YES	3	I	
Essential service water return line piping and valves from essential chiller units	3	PS/B ESWPT	C	YES	3	I	
14. Gaseous Waste Management System (GWMS)							
Waste gas surge tanks	6	A/B	N/A	N/A	6	Note 1	
Charcoal beds	6	A/B	N/A	N/A	6	Note 1	
Waste gas compressor packages	6	A/B	N/A	N/A	6	Note 1	
Waste gas dryer skid	6	A/B	N/A	N/A	6	Note 1	
Waste gas analyzer skid	6	A/B	N/A	N/A	6	Note 1	
Oxygen gas analyzer skid	6	A/B	N/A	N/A	6	Note 1	
Gaseous waste management system piping and valves in the system up to and including the first valve interfacing with a system of equipment class 5	6	A/B	N/A	N/A	6	Note1	
Piping and valves in the system up to but not including the first valve interfacing with a system of a higher classification	6	R/B A/B	N/A	N/A	6	Note1	
15. Liquid Waste Management System (LWMS)							
Containment vessel reactor coolant drain tank pumps	6	PCCV	N/A	N/A	6	Note 1	
Containment vessel sump pumps	6	PCCV	N/A	N/A	6	Note 1	
Reactor building sump pumps	6	R/B	N/A	N/A	6	Note 1	

Table 3.2-2 Classification of Mechanical and Fluid Systems, Components, and Equipment (Sheet 33 of 53)

System and Components	Equipment Class	Location	Quality Group	10 CFR 50 Appendix B (Reference 3.2-8)	Codes and Standards(3)	Seismic Category	Notes
Auxiliary building sump pumps	6	A/B	N/A	N/A	6	Note 1	
Waste holdup tank pumps	6	A/B	N/A	N/A	6	Note 1	
Waste monitor tank pumps	6	A/B	N/A	N/A	6	Note 1	
Detergent drain tank pump	6	A/B	N/A	N/A	6	Note 1	
Detergent drain monitor tank pump	6	A/B	N/A	N/A	6	Note 1	
Chemical drain tank pump	6	A/B	N/A	N/A	6	Note 1	
Auxiliary building equipment drain sump pump	6	A/B	N/A	N/A	6	Note 1	
Containment vessel reactor coolant drain tank	6	PCCV	N/A	N/A	6	Note 1	
Reactor building sump tank	6	R/B	N/A	N/A	6	Note 1	
Auxiliary building sump tank	6	A/B	N/A	N/A	6	Note 1	
Auxiliary building equipment drain sump tank	6	A/B	N/A	N/A	6	Note 1	
Waste holdup tanks	6	A/B	N/A	N/A	6	Note 1	
Waste monitor tanks	6	A/B	N/A	N/A	6	Note 1	
Detergent drain tank	6	A/B	N/A	N/A	6	Note 1	
Detergent drain monitor tank	6	A/B	N/A	N/A	6	Note 1	
Neutralizing agent measuring tank	6	A/B	N/A	N/A	6	Note 1	
Waste effluent inlet filters	6	A/B	N/A	N/A	6	Note 1	
Waste demineralizers	6	A/B	N/A	N/A	6	Note 1	
Activated carbon filter	6	A/B	N/A	N/A	6	Note 1	
Waste effluent outlet strainer	6	A/B	N/A	N/A	6	Note 1	
Detergent drain strainer	6	A/B	N/A	N/A	6	Note 1	
Liquid waste management system piping and valves in the system up to and including the first valve interfacing with a system of equipment class 5	6	PCCV R/B A/B	N/A	N/A	6	Note 1	

Table 3.2-2 Classification of Mechanical and Fluid Systems, Components, and Equipment (Sheet 34 of 53)

System and Components	Equipment Class	Location	Quality Group	10 CFR 50 Appendix B (Reference 3.2-8)	Codes and Standards(3)	Seismic Category	Notes
Piping and valves in the system up to but not including the first valve interfacing with a system of a higher classification	6	PCCV, R/B A/B	N/A	N/A	6	Note 1	
Liquid waste management system containment isolation valves and the piping between the valves	2	PCCV, R/B	B	YES	2	I	
16. Solid Waste Management System							
Spent resin storage tanks	6	A/B	N/A	N/A	6	Note 1	
Solid Waste Management System piping and valves in the system up to and including the first valve interfacing with a system of equipment class 5	6	A/B	N/A	N/A	6	Note 1	
Piping and valves in the Solid Waste Management System up to but not including the first valve interfacing with a system of a higher classification	6	A/B	N/A	N/A	6	Note 1	
17. Refueling Water Storage System							
Refueling water recirculation pumps	3	R/B	C	YES	3	I	
Refueling water storage pit	2	PCCV	B	YES	5	I	
Refueling water storage auxiliary tank	4	O/B	D	N/A	4	NS	

Table 3.2-2 Classification of Mechanical and Fluid Systems, Components, and Equipment (Sheet 35 of 53)

System and Components	Equipment Class	Location	Quality Group	10 CFR 50 Appendix B (Reference 3.2-8)	Codes and Standards(3)	Seismic Category	Notes
Refueling water recirculation pumps discharge piping and valves in the refueling water storage system excluding piping downstream of the valve RWS-VLV-021	3	PCCV R/B	C	YES	3	I	
Piping including branch piping and valves in the refueling water storage system from the refueling water storage pit up to and including the outermost containment isolation valves RWS-MOV-004,AOV-022, and valves RWS-VLV-041,042,061,062,075	2	PCCV R/B	B	YES	2	I	
Refueling water recirculation pump suction piping from RWS-MOV-004(excluding) and from RWS-VLV-101(including) up to pumps	3	R/B	C	YES	3	I	
Piping and valves in the refueling water storage system except the foregoing piping and valves	4	PCCV R/B	D	N/A	4	NS	
18. Compressed Air and Gas System							
Instrument air compressors package	5	T/B	N/A	N/A	5	NS	
Service air compressors package	5	T/B	N/A	N/A	5	NS	
Compressed air and gas system piping and valves except the containment penetration noted below	5	PCCV R/B A/B T/B	N/A	N/A	5	NS	
Compressed air and gas system containment isolation valves and piping between the valves	2	PCCV R/B	B	YES	2	I	

Table 3.2-2 Classification of Mechanical and Fluid Systems, Components, and Equipment (Sheet 36 of 53)

System and Components	Equipment Class	Location	Quality Group	10 CFR 50 Appendix B (Reference 3.2-8)	Codes and Standards(3)	Seismic Category	Notes
19. Primary Make-Up Water System							
Primary makeup water tank	4	O/B	D	N/A	4	NS	
Primary makeup water pump	4	A/B	D	N/A	4	NS	
Primary makeup water system valves and piping	4	R/B A/B O/B	D	N/A	4	NS	
20. Demineralized Water System							
Demineralized water system containment isolation valves and piping between the valves	2	PCCV R/B	B	YES	2	I	
Demineralized water system piping and valves except the containment penetration noted above	5	PCCV R/B A/B	N/A	N/A	5	NS	
21. Auxiliary Steam Supply System							
(Deleted)							
(Deleted)							
(Deleted)							
Auxiliary steam supply system drain monitor heat exchanger	4	A/B	D	N/A	4	NS	
Auxiliary steam supply system drain tank	4	A/B	D	N/A	4	NS	
Auxiliary steam supply system drain tank pump	4	A/B	D	N/A	4	NS	
Auxiliary boiler feed water tank	4	O/B	D	N/A	4	NS	
Auxiliary boiler feed water pump	4	O/B	D	N/A	4	NS	
Auxiliary steam supply system piping and valves	4	T/B, A/B O/B	D	N/A	4	NS	

Table 3.2-2 Classification of Mechanical and Fluid Systems, Components, and Equipment (Sheet 37 of 53)

System and Components	Equipment Class	Location	Quality Group	10 CFR 50 Appendix B (Reference 3.2-8)	Codes and Standards(3)	Seismic Category	Notes
22. Steam Generator Blowdown System							
System components	4	T/B R/B A/B	D	N/A	4	NS	
Steam generator Blowdown system piping and valves from steam generators up to and including the first containment isolation valves, on the outboard side of containment	2	PCCV R/B	B	YES	2	I	
Steam generator Blowdown system piping and valves from the outlet of the first containment isolation valves up to and including pipe anchors located in the main steam piping room wall	3	R/B	C	YES	3	I	
Steam generator Blowdown system piping and valves in the reactor building, auxiliary building, and turbine building	4	R/B, A/B, T/B	D	N/A	4	NS	
23. Fire protection water supply System							
Fire protection water supply system containment isolation valves and piping between the valves.	2	PCCV R/B	B	YES	2	I	
Fire protection water supply system piping and valves except the containment penetration noted above	7	PCCV R/B,A/B AC/B,PS/B T/B	N/A	N/A	5	Note 2	
24. Process and Post-accident Sampling System							
Sample heat exchanger –tube side	4	R/B	D	N/A	4	NS	

Table 3.2-2 Classification of Mechanical and Fluid Systems, Components, and Equipment (Sheet 38 of 53)

System and Components	Equipment Class	Location	Quality Group	10 CFR 50 Appendix B (Reference 3.2-8)	Codes and Standards(3)	Seismic Category	Notes
Sample heat exchanger–component cooling water side	3	R/B	C	YES	3	I	
Accumulator sampling piping and valves from accumulator up to and including the outermost containment isolation valve	2	PCCV R/B	B	YES	2	I	
Hot leg sampling piping and valves from hot leg up to and including the outermost containment isolation valve	2	PCCV R/B	B	YES	2	I	
Pressurizer liquid sampling piping and valves from hot leg up to and including the outermost containment isolation valve	2	PCCV R/B	B	YES	2	I	
Containment isolation valves PSS-MOV-071and 072 and piping between them	2	PCCV R/B	B	YES	2	I	
RHS loop sampling piping and valves up to and including the valves PSS-MOV-052A,B	2	R/B	B	YES	2	I	
Containment vessel atmosphere gas sample cooler	4	R/B	D	N/A	4	NS	
Containment vessel atmosphere gas sample moisture separator	4	R/B	D	N/A	4	NS	
Containment vessel atmosphere gas sample cooler-component cooling water side	3	R/B	C	YES	3	I	
Containment vessel atmosphere gas sampling hood	4	R/B	D	N/A	4	NS	
Containment vessel atmosphere gas sampling compressor	4	R/B	D	N/A	4	NS	

Table 3.2-2 Classification of Mechanical and Fluid Systems, Components, and Equipment (Sheet 39 of 53)

System and Components	Equipment Class	Location	Quality Group	10 CFR 50 Appendix B (Reference 3.2-8)	Codes and Standards(3)	Seismic Category	Notes
Process and post-accident sampling systems piping and valves not specifically described above	4	R/B A/B,AC/B	D	N/A	4	NS	
Sample hood and sample panel	4	AC/B	D	N/A	4	NS	
Post accident liquid sample hood	4	R/B	D	N/A	4	NS	
25. Equipment and Floor drainage System							
Drain piping, valves and sump in the containment	6	PCCV	N/A	N/A	6	Note 1	
Drain piping, valves in radiological controlled area	6	R/B A/B AC/B	N/A	N/A	6	Note 1	
Drain piping, valves, reactor building non-radioactive sump and sump pump in reactor building except for RCA	4	R/B	D	N/A	4	NS	
Drain piping, valves, turbine building sump and sump pump in turbine building	4	T/B	D	N/A	4	NS	
Drain piping, valves in auxiliary building and access control building, except for RCA	5	A/B,AC/B	N/A	N/A	5	NS	
Drain piping, valves in power source building	5	PS/B	N/A	N/A	5	NS	
Drain piping valves related to ESF rooms drain isolation DS-VLV-001A through DS-VLV-002,and DS-VLV-100 through 102	3	R/B	C	YES	3	I	
26. Potable and Sanitary Water System							

Table 3.2-2 Classification of Mechanical and Fluid Systems, Components, and Equipment (Sheet 40 of 53)

System and Components	Equipment Class	Location	Quality Group	10 CFR 50 Appendix B (Reference 3.2-8)	Codes and Standards(3)	Seismic Category	Notes
Potable and Sanitary Water System components, piping and valves	5	R/B,A/B,AC/B PS/B, T/B	N/A	N/A	5	NS	
27. Emergency Gas Turbine Auxiliary System							
Fuel oil storage tanks	3	O/B	C	YES	3	I	
Fuel oil transfer pumps	3	PS/B	C	YES	3	I	
Fuel oil day tanks	3	PS/B	C	YES	3	I	
Air receivers	3	PS/B	C	YES	3	I	
Main oil pumps	3	PS/B	C	YES	3	I	
Oil cooler	3	PS/B	C	YES	3	I	
Combustion air intake equipment	3	PS/B	C	YES	3	I	
Exhaust equipment	3	PS/B	C	YES	3	I	
Piping and valves	3	PSB	C	YES	3	I	
28. Fuel Handling and Refueling System							
Refueling machine	3	R/B	C	YES	5	I	
Fuel handling machine	3	R/B	C	YES	5	I	
Spent fuel assembly handling tool	3	R/B	C	YES	5	I	
New fuel storage rack	4	R/B	D	N/A	4	I	
Spent fuel storage rack	4	R/B	D	N/A	4	I	
Fuel transfer tube	2	R/B	B	YES	2	I	
Spent fuel Pit	3	R/B	C	YES	5	I	
New fuel pit	3	R/B	C	YES	5	I	
Fuel transfer canal	3	R/B	C	YES	5	I	
Cask pit	3	R/B	C	YES	5	I	
Cask washdown pit	3	R/B	C	YES	5	I	
Spent fuel pit gates	3	R/B	C	YES	5	I	
29. Containment System							
Containment vessel	2	PCCV	B	YES	2	I	
Equipment hatch	2	PCCV	B	YES	2	I	
Personnel hatch	2	PCCV	B	YES	2	I	

Table 3.2-2 Classification of Mechanical and Fluid Systems, Components, and Equipment (Sheet 41 of 53)

System and Components	Equipment Class	Location	Quality Group	10 CFR 50 Appendix B (Reference 3.2-8)	Codes and Standards(3)	Seismic Category	Notes
30. Miscellaneous Plant Equipment							
PCCV polar crane	5	PCCV	N/A	N/A	5	II	
Spent fuel cask handling crane	5	R/B	N/A	N/A	5	II	
Essential service water pump pit crane	5	UHSRS	N/A	N/A	5	II	
Crane in reactor building	5	R/B	N/A	N/A	5	II	
Crane for SWDS in auxiliary building	5	A/B	N/A	N/A	5	II	
31. Containment Purge System							
Containment high volume purge air handling unit	5	R/B	N/A	N/A	5	NS	
Containment high volume purge air handling unit fan	5	R/B	N/A	N/A	5	NS	
Containment high volume purge air handling unit cooling coil	4	R/B	D	N/A	5	NS	
Containment high volume purge air handling unit electric heating coil	5	R/B	N/A	N/A	5	NS	
Containment high volume purge exhaust filtration unit	5	A/B	N/A	N/A	5	NS	
Containment high volume purge exhaust filtration unit fan	5	A/B	N/A	N/A	5	NS	
Containment high volume purge exhaust filtration unit high-efficiency particulate air filter	5	A/B	N/A	N/A	5	NS	
Containment low volume purge air handling units	5	R/B	N/A	N/A	5	NS	
Containment low volume purge air handling unit fans	5	R/B	N/A	N/A	5	NS	
Containment low volume purge air handling unit cooling coils	4	R/B	D	N/A	5	NS	
Containment low volume purge air handling unit electric heating coils	5	R/B	N/A	N/A	5	NS	

Table 3.2-2 Classification of Mechanical and Fluid Systems, Components, and Equipment (Sheet 42 of 53)

System and Components	Equipment Class	Location	Quality Group	10 CFR 50 Appendix B (Reference 3.2-8)	Codes and Standards(3)	Seismic Category	Notes
Containment low volume purge exhaust filtration units	5	R/B	N/A	N/A	5	NS	
Containment low volume purge exhaust filtration unit fans	5	R/B	N/A	N/A	5	NS	
Containment low volume purge exhaust filtration unit high-efficiency particulate air filters	5	R/B	N/A	N/A	5	NS	
Containment low volume purge exhaust filtration unit charcoal adsorbers	5	R/B	N/A	N/A	5	NS	
Containment penetration piping	2	PCCV R/B	B	YES	2	I	
Ductwork	5	PCCV R/B A/B	N/A	N/A	5	NS	
Containment isolation valves	2	PCCV R/B	B	YES	2	I	
Dampers	5	PCCV R/B A/B	N/A	N/A	5	NS	
32. Containment Fan Cooler System							
Containment fan cooler unit fans	5	PCCV	N/A	N/A	5	NS	
Containment fan cooler unit	5	PCCV	N/A	N/A	5	II	
Containment fan cooler unit cooling coils	2	PCCV	B	YES	5	I	
Ductwork	5	PCCV	N/A	N/A	5	NS	
Dampers	5	PCCV	N/A	N/A	5	NS	
33. Control Rod Drive Mechanism Cooling System							
Control rod drive mechanism cooling unit fans	2	PCCV	B	YES	5	I	

Table 3.2-2 Classification of Mechanical and Fluid Systems, Components, and Equipment (Sheet 43 of 53)

System and Components	Equipment Class	Location	Quality Group	10 CFR 50 Appendix B (Reference 3.2-8)	Codes and Standards(3)	Seismic Category	Notes
Control rod drive mechanism cooling unit	5	PCCV	N/A	N/A	5	II	
Control rod drive mechanism cooling unit cooling coils	2	PCCV	B	YES	5	I	
Dampers	5	PCCV	N/A	N/A	5	NS	
Ductwork	5	PCCV	N/A	N/A	5	NS	
34. Reactor Cavity Cooling System							
Reactor cavity cooling fans	5	PCCV	N/A	N/A	5	NS	
Dampers	5	PCCV	N/A	N/A	5	NS	
Ductwork	5	PCCV	N/A	N/A	5	NS	
35. Annulus Emergency Exhaust System							
Annulus emergency exhaust filtration units	2	R/B	B	YES	5	I	
Annulus emergency exhaust filtration unit fans	2	R/B	B	YES	5	I	
Annulus emergency exhaust filtration unit high-efficiency particulate air filters	2	R/B	B	YES	5	I	
Dampers	2	R/B	B	YES	5	I	
Ductwork	2	R/B	B	YES	5	I	
36. MCR Heating, Ventilation, and Air Conditioning System							
Main control room air handling units	3	R/B	C	YES	5	I	
Main control room air handling unit fans	3	R/B	C	YES	5	I	
Main control room air handling unit cooling coils	3	R/B	C	YES	3	I	

Table 3.2-2 Classification of Mechanical and Fluid Systems, Components, and Equipment (Sheet 44 of 53)

System and Components	Equipment Class	Location	Quality Group	10 CFR 50 Appendix B (Reference 3.2-8)	Codes and Standards(3)	Seismic Category	Notes
Main control room air handling unit electric heating coils	3	R/B	C	YES	5	I	
Main control room toilet/kitchen exhaust fans	5	R/B	N/A	N/A	5	NS	
Main control room smoke purge fan	5	R/B	N/A	N/A	5	NS	
Main control room emergency filtration units	3	R/B	C	YES	5	I	
Main control room emergency filtration unit fans	3	R/B	C	YES	5	I	
Main control room emergency filtration unit electric heating coils	3	R/B	C	YES	5	I	
Main control room emergency filtration unit high efficiency particulate air filters	3	R/B	C	YES	5	I	
Main control room emergency filtration unit charcoal adsorbers	3	R/B	C	YES	5	I	
Dampers	3	R/B	C	YES	5	I	
Ductwork	3	R/B	C	YES	5	I	
Duct heater	5	R/B	N/A	N/A	5	II	
(Deleted)							
37. Class 1E Electrical Room Heating, Ventilation, and Air Conditioning System							
Class 1E electrical room air handling units	3	R/B	C	YES	5	I	
Class 1E electrical room air handling unit fans	3	R/B	C	YES	5	I	
Class 1E electrical room air handling unit cooling coils	3	R/B	C	YES	3	I	
Class 1E electrical room air handling unit electric heating coils	3	R/B	C	YES	5	I	
Class 1E electrical room return air fans	3	R/B	C	YES	5	I	

Table 3.2-2 Classification of Mechanical and Fluid Systems, Components, and Equipment (Sheet 45 of 53)

System and Components	Equipment Class	Location	Quality Group	10 CFR 50 Appendix B (Reference 3.2-8)	Codes and Standards(3)	Seismic Category	Notes
Class 1E battery room exhaust fans	3	R/B	C	YES	5	I	
Dampers	3	R/B	C	YES	5	I	
Ductwork	3	R/B	C	YES	5	I	
Duct heaters	5	R/B	N/A	N/A	5	II	
(Deleted)							
38. Safeguard Component Area Heating, Ventilation, and Air Conditioning System							
Safeguard component area air handling units	3	R/B	C	YES	5	I	
Safeguard component area air handling unit fans	3	R/B	C	YES	5	I	
Safeguard component area air handling unit cooling coils	3	R/B	C	YES	3	I	
Safeguard component area air handling unit electric heating coils	3	R/B	C	YES	5	I	
Dampers	3	R/B	C	YES	5	I	
Ductwork	3	R/B	C	YES	5	I	
39. Emergency Feedwater Pump Area Heating, Ventilation, and Air Conditioning System							
Emergency feedwater pump area air handling units	3	R/B	C	YES	5	I	
Emergency feedwater pump area air handling unit fans	3	R/B	C	YES	5	I	
Emergency feedwater pump area air handling unit coils	3	R/B	C	YES	3	I	
Emergency feedwater pump area air handling unit electric heating coils	3	R/B	C	YES	5	I	

Table 3.2-2 Classification of Mechanical and Fluid Systems, Components, and Equipment (Sheet 46 of 53)

System and Components	Equipment Class	Location	Quality Group	10 CFR 50 Appendix B (Reference 3.2-8)	Codes and Standards(3)	Seismic Category	Notes
Dampers	3	R/B	C	YES	5	I	
Ductwork	3	R/B	C	YES	5	I	
(Deleted)							
40. Safety-related Component Area Heating, Ventilation, and Air Conditioning system							
Penetration area air handling units	3	R/B	C	YES	5	I	
(Deleted)							
Penetration area air handling unit fans	3	R/B	C	YES	5	I	
Penetration area air handling unit cooling coils	3	R/B	C	YES	3	I	
Penetration area air handling unit electric heating coils	3	R/B	C	YES	5	I	
Annulus emergency exhaust filtration unit area air handling units	3	R/B	C	YES	5	I	
Annulus emergency exhaust filtration unit area air handling unit fans	3	R/B	C	YES	5	I	
Annulus emergency exhaust filtration unit area air handling unit cooling coils	3	R/B	C	YES	3	I	
Annulus emergency exhaust filtration unit area air handling unit electric heating coils	3	R/B	C	YES	5	I	
Charging pump area air handling units	3	R/B	C	YES	5	I	
Charging pump area air handling unit fans	3	R/B	C	YES	5	I	
Charging pump area air handling unit cooling coils	3	R/B	C	YES	3	I	

Table 3.2-2 Classification of Mechanical and Fluid Systems, Components, and Equipment (Sheet 47 of 53)

System and Components	Equipment Class	Location	Quality Group	10 CFR 50 Appendix B (Reference 3.2-8)	Codes and Standards(3)	Seismic Category	Notes
Charging pump area air handling unit electric heating coils	3	R/B	C	YES	5	I	
Component cooling water pump area air handling units	3	R/B	C	YES	5	I	
Component cooling water pump area air handling unit fans	3	R/B	C	YES	5	I	
Component cooling water pump area air handling unit cooling coils	3	R/B	C	YES	3	I	
Component cooling water pump area air handling unit electric heating coils	3	R/B	C	YES	5	I	
Essential chiller unit area air handling units	3	PS/B	C	YES	5	I	
Essential chiller unit area air handling unit fans	3	PS/B	C	YES	5	I	
Essential chiller unit area air handling unit cooling coils	3	PS/B	C	YES	3	I	
Essential chiller unit area air handling unit electric heating coils	3	PS/B	C	YES	5	I	
41. Main Steam/Feedwater Piping Area Heating, Ventilation, and Air Conditioning System							
(Deleted)							
Main steam/feedwater piping area air handling units	5	R/B	N/A	N/A	5	NS	
Main steam/feedwater piping area air handling unit fans	5	R/B	N/A	N/A	5	NS	
Main steam/feedwater piping area air handling unit cooling coils	4	R/B	D	N/A	5	NS	
Main steam/feedwater piping area air handling unit electric heating coils	5	R/B	N/A	N/A	5	NS	

Table 3.2-2 Classification of Mechanical and Fluid Systems, Components, and Equipment (Sheet 48 of 53)

System and Components	Equipment Class	Location	Quality Group	10 CFR 50 Appendix B (Reference 3.2-8)	Codes and Standards(3)	Seismic Category	Notes
Dampers	5	R/B	N/A	N/A	5	NS	
Ductwork	5	R/B	N/A	N/A	5	NS	
42. Auxiliary Building Heating, Ventilation, and Air Conditioning System							
Auxiliary building air handling units	5	A/B	N/A	N/A	5	NS	
Auxiliary building air handling unit fans	5	A/B	N/A	N/A	5	NS	
Auxiliary building air handling unit cooling coils	4	A/B	D	N/A	5	NS	
Auxiliary building air handling unit heating coils	4	A/B	D	N/A	5	NS	
Auxiliary building exhaust fans	5	A/B	N/A	N/A	5	NS	
Penetration and Safeguard Component area isolation dampers and ductwork between Penetration and Safeguard Component area isolation damper	2	R/B	B	YES	5	I	
Exhaust line isolation dampers	2	R/B	B	YES	5	I	
Dampers	5	R/B PS/B A/B AC/B	N/A	N/A	5	NS	
Ductwork	5	R/B PS/B A/B AC/B	N/A	N/A	5	NS	
43. Non-Class 1E Electrical Room HVAC System							
Non-Class 1E electrical room air handling units	5	A/B	N/A	N/A	5	NS	
Non-Class 1E electrical room air handling unit fans	5	A/B	N/A	N/A	5	NS	

Table 3.2-2 Classification of Mechanical and Fluid Systems, Components, and Equipment (Sheet 49 of 53)

System and Components	Equipment Class	Location	Quality Group	10 CFR 50 Appendix B (Reference 3.2-8)	Codes and Standards(3)	Seismic Category	Notes
Non-Class 1E electrical room air handling unit cooling coils	4	A/B	D	N/A	5	NS	
Non-Class 1E electrical room air handling unit heating coils	4	A/B	D	N/A	5	NS	
Non-Class 1E electrical room Return air fans	5	A/B	N/A	N/A	5	NS	
Non-Class 1E battery room exhaust fans	5	A/B	N/A	N/A	5	NS	
Dampers	5	A/B	N/A	N/A	5	NS	
Ductwork	5	A/B	N/A	N/A	5	NS	
44. Technical Support Center Heating, Ventilation, and Air Conditioning System							
Technical support center air handling unit	5	A/B	N/A	N/A	5	NS	
Technical support center air handling unit fan	5	A/B	N/A	N/A	5	NS	
Technical support center air handling unit cooling coil	4	A/B	D	N/A	5	NS	
Technical support center air handling unit electric heating coil	5	A/B	N/A	N/A	5	NS	
Technical support center toilet /kitchen exhaust fan	5	AC/B	N/A	N/A	5	NS	
Technical support center emergency filtration unit	5	A/B	N/A	N/A	5	NS	
Technical support center emergency filtration unit fan	5	A/B	N/A	N/A	5	NS	
Technical support center emergency filtration unit electric heating coil	5	A/B	N/A	N/A	5	NS	
Technical support center emergency filtration unit high efficiency particulate air filter	5	A/B	N/A	N/A	5	NS	

Table 3.2-2 Classification of Mechanical and Fluid Systems, Components, and Equipment (Sheet 50 of 53)

System and Components	Equipment Class	Location	Quality Group	10 CFR 50 Appendix B (Reference 3.2-8)	Codes and Standards(3)	Seismic Category	Notes
Technical support center emergency filtration unit charcoal adsorber	5	A/B	N/A	N/A	5	NS	
Dampers	5	A/B	N/A	N/A	5	NS	
Ductwork	5	A/B	N/A	N/A	5	NS	
45. Essential Chilled Water System							
Essential chiller units							
Evaporator side	3	PS/B	C	YES	3	I	
Condenser side	3	PS/B	C	YES	3	I	
Essential chilled water pumps	3	PS/B	C	YES	3	I	
Essential chilled water compression tanks	3	PS/B	C	YES	3	I	
Piping and valves	3	R/B PS/B	C	YES	3	I	
46. Non-Essential Chilled Water System							
Non-essential chiller units							
Evaporator side	4	A/B	D	N/A	5	NS	
Condenser side	4	A/B	D	N/A	5	NS	
Non-essential chilled water pumps	4	A/B	D	N/A	5	NS	
Non-essential chilled water compression tanks	4	A/B	D	N/A	5	NS	
Non-essential chilled water system cooling towers	4	A/B	D	N/A	5	NS	
Non-essential chilled water system condenser water pumps	4	A/B	D	N/A	5	NS	

Table 3.2-2 Classification of Mechanical and Fluid Systems, Components, and Equipment (Sheet 51 of 53)

System and Components	Equipment Class	Location	Quality Group	10 CFR 50 Appendix B (Reference 3.2-8)	Codes and Standards(3)	Seismic Category	Notes
Piping and valves (except portion of the containment penetration)	4	PCCV R/B A/B PS/B T/B	D	N/A	5	NS	
(Deleted)							
Piping and valves between and including the containment isolation valves	2	PCCV R/B	B	YES	2	I	
47. Containment Hydrogen Control System							
Igniters	4	PCCV	D	N/A	5	NS	
48. Radiation monitoring system							
Piping and valves between and including the containment isolation valves	2	PCCV R/B	B	YES	2	I	
49. Condensate Storage and Transfer System							
Condensate storage tank	4	O/B	D	N/A	4	NS	
The components downstream condensate storage tank	4	O/B T/B	D	N/A	4	NS	
50. Turbine Component Cooling Water System							
All system components	4	T/B	D	N/A	4	NS	
51. Non-Essential Service Water System							
All system components	5	T/B	N/A	N/A	5	NS	
52. Secondary Sampling System (SSS)							
Secondary sampling system all components	4	T/B	D	N/A	4	NS	

Table 3.2-2 Classification of Mechanical and Fluid Systems, Components, and Equipment (Sheet 52 of 53)

System and Components	Equipment Class	Location	Quality Group	10 CFR 50 Appendix B (Reference 3.2-8)	Codes and Standards(3)	Seismic Category	Notes
53. Turbine Building Area Ventilation System							
All system components	5	T/B	N/A	N/A	5	NS	
54. Turbine Generator							
Main turbine	4	T/B	D	N/A	4	NS	
Moisture separator and reheaters	4	T/B	D	N/A	4	NS	
Generator	5	T/B	N/A	N/A	5	NS	
Other system components							
Containing secondary coolant	4	T/B	D	N/A	4	NS	
Not containing secondary coolant	5	T/B	N/A	N/A	5	NS	
55. Main Steam Supply System (MSS)							
Main steam supply system components downstream of the first restraint located between the reactor building and turbine building	4	T/B	D	N/A	4	NS	
56. Main Condenser							
Main condensers	4	T/B	D	N/A	4	NS	
57. Main Condenser Evacuation System (MCES)							
MCES components	4	T/B	D	N/A	4	NS	
58. Gland Seal System (GSS)							
Gland seal system components	4	T/B	D	N/A	4	NS	
59. Circulating Water System (CWS)							
CWS components	5	O/B T/B	N/A	N/A	5	NS	

Table 3.2-2 Classification of Mechanical and Fluid Systems, Components, and Equipment (Sheet 53 of 53)

System and Components	Equipment Class	Location	Quality Group	10 CFR 50 Appendix B (Reference 3.2-8)	Codes and Standards(3)	Seismic Category	Notes
60. Condensate Polishing System (CPS)							
Condensate polisher	4	T/B	D	N/A	4	NS	
Other system components							
Containing secondary coolant	4	T/B	D	N/A	4	NS	
Not containing secondary coolant	5	T/B	N/A	N/A	5	NS	
61. Condensate and Feedwater System (CFS)							
The system components up to the first piping restraint at the interface between the reactor building and the turbine building	4	T/B	D	N/A	4	NS	
62. Secondary side Chemical Injection System (SCIS)							
Secondary chemical injection system components	5	T/B	N/A	N/A	5	NS	

Notes:

1. Seismic category meeting RG 1.143 (Reference 3.2-10) is applied.
2. Seismic category meeting RG 1.189 (Reference 3.2-11) is applied.
3. Identification number for “Code and Standards”

   (1) ASME Code, Section III, Class 1 (Reference 3.2-14)

   (2) ASME Code, Section III, Class 2 (Reference 3.2-14)

   (3) ASME Code, Section III, Class 3 (Reference 3.2-14)

   (4) RG 1.26 (Reference 3.2-13), Table 1, Quality Standards

   (5) Codes and standards as defined in design bases

   (6) RG 1.143 (Reference 3.2-10), Table 1, Code and Standards for Design of SCC for Radwaste Facility

Table 3.2-3 Comparison of Various Requirements to Equipment Class

US-APWR Equipment Class	ASME Code, Section III (Reference 3.2-14), Class	RG1.29 (Reference 3.2-5) Seismic Category	RG1.26 (Reference 3.2-13) NRC Quality Group	10 CFR 50 Appendix B (Reference 3.2-8)
1	1[1]	I	A	YES[2]
2	2[1]	I	B	YES[2]
3	3[1]	I	C	YES[2]
4	N/A[3]	NS or II	D	N/A[4]
5	N/A[5]	NS or II	N/A	N/A[4]
6	N/A[6]	N/A[7]	N/A	N/A[8]
7	N/A[9]	N/A[10]	N/A	N/A[11]

Notes:

1. Items not covered by the ASME Code are designed to other applicable codes and standards.
2. "Yes" means QA Program is required according to 10 CFR 50, Appendix B (Reference 3.2-8).
3. Refer to Subsection 3.2.2.4.
4. A graded approach QA Program meeting Chapter 17, as applicable.
5. Code and standard as defined in design bases are applied.
6. Code and standard meeting RG 1.143 (Reference 3.2-10) are applied.
7. Seismic category meeting RG 1.143 (Reference 3.2-10) is applied.
8. A QA program meeting RG 1.143 (Reference 3.2-10) is applied.
9. Code and standard meeting RG 1.189 (Reference 3.2-11) is applied.
10. Seismic category meeting RG 1.189 (Reference 3.2-11) is applied.
11. A QA Program meeting RG 1.189 (Reference 3.2-11) is applied.
12. Seismic category II SSCs meet the QA requirement of 10 CFR, Appendix B. (Refer to sub-section 3.2.1.1.2)

Table 3.2-4 Seismic Classification of Buildings and Structures[1]

Structure	Acronym	Seismic Category[2]
Reactor Building[3]	R/B	I
Prestressed Concrete Containment Vessel[3]	PCCV	I
Containment Internal Structure[3]		I
Power Source Building (East and West)[3]	PS/B	I
Power Source Fuel Storage Vault	PSFSV	I
Essential Service Water Pipe Tunnel (ESWPT) (from/to UHS)	ESWPT	I
UHS Related Structures	UHSRS	I
A/B[3]	A/B	II
Turbine Building	T/B	II
AC/B[3]	AC/B	NS
Outside Building (e.g., maintenance facility, operations office)	O/B	NS
Turbine generator pedestal	T/G Pedestal	NS

Notes:

1. Other non-standard plant building structures, such as minor NS buildings and structures in the plant yard, are not listed in the above table and are not considered part of the US-APWR Nuclear Island.

2. Seismic category I (I)
   Seismic category II (II)
   Non-Seismic (NS)

3. US-APWR Nuclear Island

3.3 Wind and Tornado Loadings

3.3.1 Wind Loadings

For US-APWR, including site-specific seismic category I and II SSCs subject to wind loads, the design basis wind loadings are determined in accordance with American Society of Civil Engineers (ASCE)/Structural Engineering Institute (SEI), "Minimum Design Loads for Buildings and Other Structures", ASCE/SEI 7-05 (Reference 3.3-1). However, load combinations involving wind or tornado as given in ASCE/SEI 7-05 are not used. Instead, load combinations as defined in applicable codes and as modified by the relevant NRC RGs and SRPs are used. Load combinations, load factors, allowable stresses, and acceptance criteria for US-APWR, including site-specific seismic category I and II SSCs are discussed in Section 3.8.

Extreme winds such as hurricanes and tornadoes also have the potential to generate missiles. Missiles generated by tornadoes and extreme winds are listed in Subsection 3.5.1.4 and barrier design for missiles is discussed in Subsection 3.5.3.

3.3.1.1 Design Wind Velocity and Recurrence Interval

The design wind has a basic speed of 155 mph, corresponding to a 3-second gust at 33 ft above ground for exposure category C (open terrain). For all seismic category I and II SSCs, the basic wind speed is multiplied by an importance factor of 1.15 correlating to essential facilities in hurricane-prone regions as defined in ASCE/SEI 7-05 Tables 1-1 and 6-1. The mean recurrence interval for the basic wind speed with an importance factor of 1.15 is 100 years, which corresponds to an annual probability of exceedance of 0.01, as discussed in commentary Subsection C6.5.5 of ASCE/SEI 7-05 (Reference 3.3-1).

The basic wind speed described above envelopes the basic speed at almost all locations in the contiguous United States (US). A basic wind speed of 155 mph for exposure category C also envelopes all locations in the contiguous US that have the more severe exposure category D (flat, unobstructed areas and water surfaces), such as potential sites near open inland waterways and the Great Lakes. This is because in the contiguous US the exposure category D is associated with regions that are not prone to hurricanes and have basic wind speeds that are much lower, typically 90 mph or less. The COL Applicant is responsible for verifying the site-specific basic wind speed is enveloped by the determinations in this section.

3.3.1.2 Determination of Applied Forces

The applied wind loads are determined by converting the basic wind speed for exposure category C into design pressures or forces using the appropriate method from ASCE/SEI 7-05, either method 1 (simplified procedure) or method 2 (analytical procedure). For both methods, the conversion is performed by determining a velocity pressure which is transformed into an effective design pressure/force by using applicable adjustment factors (including topographic, directionality, and/or gust effect factors), and velocity pressure/force coefficients in accordance with ASCE/SEI 7-05 (Reference 3.3-1). When determining the resulting effective design wind pressures/forces, the influences of height and location on an SSC are captured by the adjustment factors and velocity force/pressure coefficients.

For method 1 with an importance factor of 1.15 (as discussed in Subsection 3.3.1.1), and substituting 1.0 for the topographic factor, the basic formula for effective wind velocity used for building main wind-force resisting systems is:

$$p_s = 1.15\ \lambda\ p_{basic}$$

where

p_s = effective wind velocity pressure, psf

λ = adjustment factor for exposure category C from ASCE/SEI 7-05, Figure 6-2

p_{basic} = wind pressure value in psf, from ASCE/SEI 7-05, Figure 6-2 corresponding to a basic wind speed of 155 mph

For method 2 with an importance factor of 1.15 (as discussed in Subsection 3.3.1.1), equation 6-15 from Subsection 6.5.10 of ASCE/SEI 7-05 is used where the topographic and directionality factors K_{zt} and K_d are each 1.0, and substituting into equation 6-17 of ASCE/SEI 7-05, Subsection 6.5.12 for enclosed and partially enclosed buildings, the basic formula for effective wind velocity used for building main wind-force resisting systems is:

$$P = 0.00256\ K_z\ V^2\ 1.15\ (GC_p +/- GC_{pi})$$

where

p = effective wind velocity pressure, psf

K_z = velocity pressure coefficient varying with height, taken from Table 6-3 of ASCE/SEI 7-05 for exposure category C; however, not less than 0.87 as recommended by SRP 3.3.1 (Reference 3.3-2)

V = basic wind speed of 155 mph per Subsection 3.3.1.1

G = gust effect factor = 0.85 or as determined per ASCE/SEI 7-05, Subsection 6.5.8 (where a combined gust effect and pressure coefficient factor is used from a figure(s) in ASCE/SEI 7-05, an individual gust effect factor is not applied)

C_p = external pressure coefficient from ASCE/SEI 7-05 Subsection 6.5.11

C_{pi} = internal pressure coefficient from ASCE/SEI 7-05 Subsection 6.5.11

Non-building structures and components and cladding are designed using effective wind velocity force and pressure formulae from ASCE/SEI 7-05 (Reference 3.3-1), consistent with those described above.

All US-APWR and site-specific structures and components subject to wind loads are designed using the same basic wind speed defined in Subsection 3.3.1.1. For certain non-seismic, non safety-related structures and components, an importance factor may

be used that is less than that for seismic category I and II structures. Those structures and components that are designed with a lower importance factor are investigated to assure that their failure would impact neither the function nor integrity of adjacent safety-related SSCs, nor result in the generation of missiles having more severe effects than those discussed in Subsection 3.5.1.4. Where required by the results of the investigation, structural reinforcement and/or missile barriers are implemented so as not to jeopardize safety-related SSCs due to failure effects from wind loads.

Specific descriptions of wind load design method and importance factor for US-APWR standard structures are as follows.

- The US-APWR PCCV has a relatively low profile (overall height-to-diameter ratio of approximately 1.5), and the PCCV is surrounded by the rectangular-shaped R/B such that approximately only the upper half of the PCCV is exposed to wind loading. The PCCV does not have response characteristics which make it subject to across wind loading, vortex shedding, or other unusual wind effects which might require investigation using method 3 (wind tunnel procedure) of ASCE/SEI 7-05. Further, the site location of the PCCV is such that channeling or buffeting effects do not warrant special consideration. Therefore, the PCCV is also analyzed using method 2 of ASCE/SEI 7-05 (Reference 3.3-1).

- The R/B (seismic category I), the A/B (seismic category II), and the T/B (seismic category II) are analyzed using method 2 and an importance factor of 1.15.

- The US-APWR east and west PS/Bs (seismic category I) and the AC/B (non-seismic) are low-rise, simple rigid diaphragm buildings which conform to the requirements of ASCE/SEI 7-05 Subsections 6.4.1.1 and 6.4.1.2. Therefore, these buildings have been analyzed using method 1 of ASCE/SEI 7-05 (Reference 3.3-1).

The COL Applicant is to provide the wind load design method and importance factor for site-specific seismic category I and seismic category II buildings and structures.

3.3.2 Tornado Loadings

The US-APWR standard and site-specific plant is designed to protect SSCs listed in the Appendix to US NRC RG 1.117, Revision 1, dated April 1978 (Reference 3.3-3). Accordingly, all seismic category I and II SSCs subject to tornado winds are designed to meet the acceptance criteria discussed in Section 3.8. Local damage to and/or plastic deformation of seismic category I and II structures due to the impactive loads of tornado missiles is acceptable, provided that the integrity and function of any safety-related SSCs are not adversely impacted. For this condition, where seismic category I and II structures act as missile barriers, design procedures assure that sufficient thicknesses are provided to prevent missile penetration/perforation. For concrete structures, the barrier design also assures that there is no potential for generation of secondary missiles due to spalling or scabbing effects. Subsection 3.5.3 addresses barrier design procedures for analyzing local missile impact loads.

3.3.2.1 Applicable Design Parameters

The design basis tornado parameters are for a single Rankine combined vortex tornado and are as follows.

- Maximum wind speed = 230 mph (maximum rotational + maximum translational)
- Maximum rotational speed = 184 mph
- Maximum translational speed = 46 mph
- Radius of maximum rotational wind from center of tornado, R_m = 150 ft
- Atmospheric pressure drop = 1.2 psi
- Rate of pressure change = 0.5 psi/second

The parameters listed above are based on US NRC RG 1.76, Revision 1, dated March 2007 (Reference 3.3-4). The parameters are those of a region 1 tornado as defined therein, and envelope the tornadoes of all other regions in the contiguous US. The annual probability of exceedance of the design basis tornado described above is 10^7 as discussed in RG 1.76 and the corresponding recurrence interval is approximately one million years.

3.3.2.2 Determination of Forces on Structures

3.3.2.2.1 Tornado Velocity Forces

Velocity pressures are determined by converting tornado wind speeds into effective velocity pressures in accordance with procedures accepted by SRP 3.3.1 (Reference 3.3-5). Design tornado loads are determined for enclosed and partially enclosed buildings using the analytical procedure method 2 provided in Subsection 3.3.1.2, where:

K_z is the velocity pressure exposure coefficient = 0.87

V is the maximum tornado wind speed = 230 mph

For the design basis tornado, wind speed remains constant with respect to height; therefore, no adjustment for wind speed variation with respect to height applies.

The design load equation in Subsection 3.3.1.2 above is for enclosed and partially enclosed buildings per ASCE/SEI 7-05, Subsection 6.5.12. ASCE/SEI 7-05 (Reference 3.3-1) Subsections 6.5.13 to 6.5.15 are used for the determination of design loads for different structure types as applicable.

3.3.2.2.2 Tornado Atmospheric Forces

The tornado atmospheric pressure loading is computed using the maximum atmospheric pressure drop defined in Subsection 3.3.2.1, and the ability of the structure to reduce atmospheric pressure change by venting.

For a structure that is enclosed (unvented structure), the atmospheric pressure outside the structure changes during the passage of a tornado, while the internal pressure

remains unchanged. The resulting outward differential pressure on the roof and exterior walls are applicable for all seismic category I unvented structures including the R/B (and its annulus which houses the containment penetration areas) and the PCCV.

For a structure that is partially enclosed or vented, the atmospheric pressure change occurs over a period of time, resulting in actual pressures less than or equal to the maximum pressure drop. This is the case for the A/B, T/B, and AC/B, which are designed as vented structures. Where applicable, interior walls of the A/B are designed considering tornado differential atmospheric pressure loading. The design of the T/B and AC/B are discussed further in Subsection 3.3.2.3.

The COL Applicant is to note the vented and unvented requirements of this subsection to the site-specific category I buildings and structures.

3.3.2.2.3 Tornado Missile Effects

Missiles generated by tornadoes are listed in Subsection 3.5.1.4 and barrier design for missiles is discussed in Subsection 3.5.3. The response of a structure or barrier to missile impact depends largely on the location of impact (e.g., midspan of a slab or near a support), on the dynamic properties of the target and missile, and on the kinetic energy of the missile. After it has been demonstrated that the missile will not penetrate the barrier, an equivalent static load concentrated at the impact area is then determined, from which the structural response, in conjunction with other design loads, is evaluated.

Overall effects of missile impact are designed for flexural, shear, and buckling effects on structural members using the equivalent static load obtained from the evaluation of structural response. The impact is assumed to be plastic, and is determined as outlined in “Impact Effect of Fragments Striking Structural Elements” (Reference 3.3-6).

3.3.2.2.4 Combined Tornado Effects

The total tornado wind load W_t, used in the load combinations discussed in Section 3.8, is determined for the combined effects using the following equations.

$$W_t = W_p$$

$$W_t = W_w + 0.5\, W_p + W_m$$

where

W_t = total tornado load

W_w = load from tornado wind effect

W_p = load from tornado atmospheric pressure change effect

W_m = load from tornado missile impact effect

All US-APWR seismic category I structures or components subject to tornado wind loads are designed to preclude failure effects on safety-related SSCs housed within or adjacent to them. In addition, where the trajectory of a tornado missile could impact

safety-related SSCs, seismic category I structures and components are designed according to procedures described in Subsection 3.5.3 for a spectrum of tornado missiles described in Subsection 3.5.1.4, in order to preclude effects caused by missiles on safety-related SSCs. Standard plant US-APWR seismic category I structures include the R/B and the PCCV which rest on the common mat.

These requirements also apply to seismic category I structures provided by the COL Applicant. Similarly, it is the responsibility of the COL Applicant to establish the methods for qualification of tornado effects to preclude damage to safety-related SSCs. Seismic category II structures and components are required to be designed for the same tornado wind loads as seismic category I structures, in order to preclude impact on the function and integrity of safety-related SSCs. Limited failure of seismic category II structures is acceptable provided that function and integrity of safety-related SSCs are not affected.

3.3.2.3 Effect of Failure of Structures or Components Not Designed for Tornado Loads

Failure effects of structures or components not designed for tornado loads do not jeopardize the function and integrity of safety-related SSCs.

As previously discussed, the A/B is designed as vented with respect to tornado atmospheric differential pressure loading. The nonsafety-related A/B HVAC system connects to the distribution ductwork systems in the PS/Bs and R/B, and therefore those systems could experience depressurization due to tornado loading. Consequently, these systems could experience functional failure due to the tornado depressurization loading, however their failure will not result in collapse onto safety-related SSCs contained within the PS/Bs and R/B.

The structural steel frame of the T/B is enclosed by siding. The siding fasteners are designed to retain the siding for loading caused by extreme winds with a basic wind speed of 155 mph. However, the fastener design allows for portions of the siding to be blown off in the event of a design-basis tornado, thereby venting the T/B and reducing the effective tornado wind pressure load on the building. This ensures that there is no overall failure of the T/B, due to tornado wind and/or atmospheric pressure change, which could affect the ability of adjacent buildings and structures to perform their intended safety functions. Localized failures of wind girts and other exposed SSCs are permitted. However, these items are designed to remain attached to the structure. Alternately, if such items could become dislodged, they are reviewed to ensure that no new missiles are generated that are not enveloped by the missiles addressed in Subsection 3.5.1.4.

The AC/B is not designed for a tornado and consequently it could potentially fail due to design basis tornado loading, including loss of its siding. However, since its location is sufficiently far away from seismic category I structures, and adjacent safety-related SSCs buried in the plant yard, the collapse of the AC/B would not impact any adjacent safety-related SSCs. The AC/B may also have localized failure due to tornado loading; however, the design precludes the generation of missiles that are not bounded by Subsection 3.5.1.4. The locations of any safety-related SSCs in the plant yard adjacent to the AC/B, including those which may be field routed, are reviewed prior to installation to ensure that their distances away from the AC/B and/or burial depths are sufficient to prevent potential failure effects that could jeopardize their function and integrity.

Therefore, the ability of other SSCs to perform their intended safety functions is not affected by the potential collapse or localized failure of the AC/B due to tornado loading.

It is the responsibility of the COL Applicant to assure that site-specific structures and components not designed for tornado loads will not impact either the function or integrity of adjacent safety-related SSCs, or generate missiles having more severe effects than those discussed in Subsection 3.5.1.4. Where required by the results of investigations, structural reinforcement and/or missile barriers are implemented so as not to jeopardize safety-related SSCs.

3.3.3 Combined License Information

COL 3.3(1) The COL Applicant is responsible for verifying the site-specific basic wind speed is enveloped by the determinations in this section.

COL 3.3(2) These requirements also apply to seismic category I structures provided by the COL Applicant. Similarly, it is the responsibility of the COL Applicant to establish the methods for qualification of tornado effects to preclude damage to safety-related SSCs.

COL 3.3(3) It is the responsibility of the COL Applicant to assure that site-specific structures and components not designed for tornado loads will not impact either the function or integrity of adjacent safety-related SSCs, or generate missiles having more severe effects than those discussed in Subsection 3.5.1.4.

COL 3.3(4) The COL Applicant is to provide the wind load design method and importance factor for site-specific category I and category II buildings and structures.

COL 3.3(5) The COL Applicant is to note the vented and unvented requirements of this subsection to the site-specific category I buildings and structures.

3.3.4 References

3.3-1 Minimum Design Loads for Buildings and Other Structures, American Society of Civil Engineers/Structural Engineering Institute, ASCE/SEI 7-05, Reston, Virginia, 2006.

3.3-2 Wind Loads, Standard Review Plan for the Review of Safety Analysis Reports for Nuclear Power Plants, NUREG-0800, United States Nuclear Regulatory Commission Standard Review Plan 3.3.1, Revision 3, March 2007.

3.3-3 Tornado Design Classification, United States Nuclear Regulatory Commission Regulatory Guide 1.117, Revision 1, April 1978.

3.3-4 Design-Basis Tornado and Tornado Missiles for Nuclear Power Plants, United States Nuclear Regulatory Commission Regulatory Guide 1.76, Revision 1, March 2007.

3.3-5 Tornado Loads, Standard Review Plan for the Review of Safety Analysis Reports for Nuclear Power Plants, NUREG-0800, United States Nuclear Regulatory Commission Standard Review Plan 3.3.2, Revision 3, March 2007.

3.3-6 R.A. Williamson and R. R. Alvy, Impact Effect of Fragments Striking Structural Elements, Holmes and Narver, Inc. Publishers, November 1973.

3.4 Water Level (Flood) Design

3.4.1 Flood Protection

The US-APWR, including site-specific SSCs, is designed to withstand the maximum water levels caused by flooding sources that are both external and internal to the plant as listed below. Combinations of external and internal events are not considered except where noted.

The external water source events are as follows:

- Probable maximum precipitation (PMP)
- Probable maximum flood (PMF) of streams and rivers
- Probable maximum tsunami hazards
- Probable maximum surge, seiche flooding, and wave action
- Potential dam failures
- Potential cooling water canals and reservoir failures
- Ground water
- Outdoor water storage facility failures

The internal water source events are as follows:

- Earthquakes
- Pipe breaks and cracks
- Fire fighting operations
- Pump mechanical seal failures

The US-APWR structures are designed for loads due to flooding. Design loads and load combinations consider both static and dynamic load effects for internal and/or external flooding.

3.4.1.1 Flood Protection for Safety and Non Safety-Related Structures, Systems, and Components

Seismic category I and II structures are designed to protect SSCs such that plant nuclear safety functions are not jeopardized by flooding due to the potential failure(s) of the plant SSCs or the operation of the plant fire protection system. The plant nuclear safety functions are defined as any function that is necessary to assure the following:

(a) The integrity of the RCPB

(b) The capability to shut down the reactor and maintain it in a safe-shutdown condition

(c) The capability to prevent or mitigate the consequences of plant conditions that could result in potential offsite exposures that are comparable to the guideline exposures of 10 CFR 100, "Reactor Site Criteria" (Reference 3.4-1)

In addition, the US-APWR plant design assures control room habitability and operator access to areas requiring local actuation of equipment required to achieve or maintain the conditions described in the preceding paragraph.

The SSCs required to be protected from flooding are discussed in this section. Additional information is provided in Sections 3.2 and 3.11 of this chapter.

Safety-related SSCs are protected from flooding by external and internal sources. The US-APWR design includes the following:

- The separation of redundant trains of safety-related SSCs as addressed in Chapters 1
- Protective barriers and enclosures, where necessary, as addressed in this section
- The placement of essential SSCs above internal flood levels
- In general, SSCs are mounted above the flood level. However, if safety-related SSCs are located below flood level, their safety function is assured, as described in Section 3.11.

Protection from flooding of non safety-related SSCs is considered when the impact of the flooding on a non safety-related SSC could be a contributing factor to the flooding of safety-related SSCs or could result in an uncontrolled release of significant radioactivity.

3.4.1.2 Flood Protection from External Sources

The US-APWR is designed for maximum water levels caused by external flooding. The design basis for external flooding complies with 10 CFR 50, Appendix A (Reference 3.4-2), specifically General Design Criterion 2, "Design Bases for Natural Phenomena." This compliance is accomplished by designing SSCs to withstand the effects of natural phenomena such as floods, tsunami, and seiches without the loss of capability to perform their safety functions. Additionally, the design reflects the following considerations:

- The determination of the most severe natural phenomena, which has been historically recorded, is addressed in Section 2.4.
- The effects of the most severe natural phenomena have been considered to occur during both normal and accident conditions in the plant.
- The importance of the safety functions to be performed.

If PMP were to occur, US-APWR safety-related SSCs would not be jeopardized. US-APWR seismic category I building roofs are designed as a drainage system capable of handling the PMP, including allowance for primary roof drainage issues caused by probable maximum winter precipitation. Seismic category I structures have sloped roofs designed to preclude roof ponding. This design channels rainfall expeditiously off the

roof. Runoff water resulting from precipitation is directed away from the R/B, and all other US-APWR standard plant structures, by virtue of the plant site grading and drainage system. The US-APWR standard design provides a plant site grade sloped away from all seismic category I and II structures.

The COL Applicant is to address the site-specific design of plant grading and drainage. Based on the design-basis flooding level (DBFL) and the plant elevation with regard to the DBFL, (refer to Subsection 3.4.1.4 for discussion on DBFL) the safety-related SSCs are protected from flooding along with the static and dynamic forces associated with a design basis flood in accordance with the requirements of “Flood Protection For Nuclear Power Plants”, RG 1.102 (Reference 3.4-3).

The COL Applicant is to identify and design, if necessary, any site-specific flood protection measures such as levees, seawalls, floodwalls, site bulkheads, revetments, or breakwaters per the guidelines of RG 1.102 (Reference 3.4-3), or dewatering system if the plant is not built above the DBFL.

When site-specific static water pressure, corresponding to maximum flood level or maximum ground water level, is not removed by site drainage, it is considered as structural load to the foundation plate of the building. Additionally, static water pressure, which cannot be removed by site drainage, is factored into horizontal, overturning, and upward static load reactions when designing seismic category I and II structures. The total value of buoyancy is based on the water head of maximum flood level or maximum ground water level excluding the motion of waves. The horizontal, overturning and upward static reactions are based on the total value of water head including the motion of waves. This loading is addressed in the design criteria presented in Section 3.8.

Below grade, the US-APWR nuclear island and other seismic category I and II structures are primarily protected against exterior flooding and the intrusion of ground water by virtue of their thick reinforced concrete walls and base mats. As recommended by NUREG-0800, SRP 14.3.2 (Reference 3.4-4), the external walls below flood level are equal to or greater than two feet thick to protect against water seepage, and penetrations in the external walls below flood level are provided with flood protection features. Construction joints in the exterior walls and base mats are provided with water stops to prevent seepage of ground water.

The COL Applicant is to address any additional measures below grade to protect against exterior flooding and the intrusion of ground water into seismic category I buildings and structures.

Below-grade exterior wall penetrations such as for piping and conduits have been minimized to reduce the risk of in-leakage and flooding. Where below-grade piping penetrations are necessary, they are designed to preclude water intrusion. This is addressed in the design criteria presented in Section 3.8 of this chapter. Where below-grade electrical conduit penetrations are necessary, internal conduit seals are installed to preclude a fluid pathway through the conduit.

Potential external sources of flooding also include failures of the plant systems and components such as outside storage tanks and yard piping. The US-APWR design includes flooding evaluation for the failures of plant systems and components that are not protected from tornado and other missiles, for example, the primary make-up water

storage tanks, refueling water storage auxiliary tank (RWSAT), demineralized water storage tanks, and fire water storage tanks. However, the site DBFL does not result from failure of such sources. Flood protection from the failure of the plant systems such as the outside storage tanks and yard piping is achieved using dikes, levees, retention basins, component location, and/or sited grading and drainage. Dikes, levees, and retention basins are provided to retain leaks and spills due to postulated failures of tanks and vessels, when appropriate. Alternatively, external tanks and piping are located sufficiently far away so that their failure does not jeopardize safety-related equipment. This is accomplished by locating external flood sources so that any spillage or leakage is directed away from safety-related equipment by virtue of the site grading and drains, and by locating these items away from exterior doors that could act as a pathway for flood waters. In addition, buried yard piping is located either in pipe tunnels or sufficiently far away so that cracks or breaks will not result in soil erosion that undermines safety-related structures or components. Alternatively, some yard tanks and vessels are small enough in volume and protected so that they do not present a credible source of flooding. Site-specific flooding hazards from engineered features, such as from service water or circulating water piping, is to be addressed by the COL Applicant.

Above grade, all exterior doors and equipment access openings that could create a pathway for floodwater to safety-related SSCs are located above the DBFL. Therefore, although they are designed to be weather-tight, these doors and openings are not required to be water-tight.

Access to the PCCV vertical tendon gallery inside the PCCV base mat is only through a tunnel with an access hatch located exterior to the structure at elevation 3 ft, 7 in. This hatch is above the plant DBFL and, therefore, the tendon end anchorages are not subject to exposure to flooding. Access to the PCCV horizontal tendon end anchorages is through the tendon gallery in the R/B, which runs along the tendon buttresses at the 90° and 270° azimuths of the PCCV and have access hatches located on the roof of the R/B. There are no potential sources of flooding for the R/B gallery. In addition, all tendon end anchorages are protected from the elements with grease caps, which prevent the intrusion of moisture and contaminants. Therefore, the function and integrity of the safety-related PCCV tendon end anchorages and their respective tendons are not jeopardized by any sources of internal or external flooding, or PMP.

In summary, the US-APWR seismic category I and II structures provide hardened protection as defined in RG 1.59 (Reference 3.4-5) against external flooding through such design features as sloped roofs, thick reinforced concrete with special porosity-reducing additives, waterproofing, and special sealing of joints and penetrations.

3.4.1.3 Flood Protection from Internal Sources

The US-APWR SSCs are designed to accommodate the effects of, and to be compatible with, the environmental conditions associated with normal operation, maintenance, testing, and postulated accidents, including LOCAs. This subsection addresses the accommodations made for flooding from internal water sources, specifically from the following:

- Earthquakes
- Pipe breaks and cracks

- Fire fighting operations
- Pump mechanical seal failures

The combination of events is not considered. However, an earthquake event followed by fire fighting operations for an earthquake induced fire is considered.

For flood events caused by an earthquake, equipment or pipe (not classified as seismic category I) in the R/B are assumed to be fully compromised and the total volume of the fluid contained within the subject equipment or pipe contributes to the flood volume. Equipment or piping not classified as seismic category I in areas outside of the area of concern is also assumed to be fully compromised, and if the discharge fluids can not be demonstrated to be excluded from the area of concern, their volume is included in the flood volume. The US-APWR is designed for maximum water levels created by internal flooding sources. The internal flood design accommodates the effects of, and is compatible with, environmental conditions associated with normal operations, maintenance, testing, and postulated accidents, including LOCAs.

Open pits are isolated within water tight compartments using water tight doors, penetration seals, and normally closed floor drains. In this manner, flooding effects caused by open pit water sloshing are considered.

For flood events caused by the postulated failure of piping, defined in Section 3.6, the rupture of the single worst-case piping in the area of concern is assumed in the flood analysis for each area of concern. The discharge volume is calculated according to "Subcompartment Pressure and Temperature Transient Analysis in Light Water Reactors", American National Standards Institute (ANSI)/American Nuclear Society (ANS) 56.10-1987, Section 3 (Reference 3.4-6), and is included in the pipe break and cracks flood evaluation. The structures adjacent to the postulated pipe rupture locations are also designed for the maximum associated hydrodynamic loads due to a pipe failure as discussed in Section 3.6. The loads and load combinations are addressed in detail in Section 3.8.

In the flooding effects from fire fighting operations, water discharged from only fire hose stations is assumed. In fire fighting operations, a discharge rate of 125 gpm is assumed for a period of 2 hours from two hose stations.

Pump mechanical seal failures of concern are limited to the active pumps identified in Section 3.9. Seal failure is a low probability event based on the use of robust pump mechanical seals. Additionally, monitoring of mechanical seal water temperature, pressure, and flow rate across the pump mechanical seals provides the means of limiting the effects of pump seal failure through early detection and timely corrective action. As such, pump mechanical seal failure presents a sufficiently low probability of occurrence and flood volume that it can be credibly ignored.

The formulae and methodology of "Design Criteria for Protection against the Effects of Compartment Flooding in Light Water Reactor Plants", ANSI/ANS-56.11-1988 (Reference 3.4-7) are used when analyzing flow rates through unusual features such as stairwells and floor/wall openings.

The areas of concern within the US-APWR are as follows:

- R/B
  - Inside the PCCV

    Systems to be protected within the PCCV are the RCS, the safety injection system (SIS), RHRS, the CSS, and the containment boundary.

    The components to be protected from flooding in the protected systems are the motor operated components, such as valves and electric/instrumentation components.

  - Outside the PCCV

    US-APWR R/B consists of a radiological controlled area (RCA) and a non-radiological controlled area (NRCA) separated physically by concrete barrier walls. These concrete barrier walls are designed to preclude flooding between the RCA and the NRCA. Piping, instrumentation, HVAC duct, conduit, and cable trays installed through a flood barrier wall are routed above the maximum flood level or provided with water-tight seals.

    - R/B RCA

      Systems to be protected in the RCA of the R/B are the SIS, the RHRS, the CSS, the containment boundary, the safeguard component area the HVAC system, and the annulus air clean up system.

      In the systems to be protected, the components to be protected from flooding are the motor driven pumps, the valves, and the HVAC fans and dampers, the electric panels, and the electric/instrumentation components within the relevant system.

    - R/B NRCA

      The NRCA of the R/B adjoins the east and west PS/Bs and the T/B, with personnel access between all three areas.

      The systems to be protected in the NRCA of the R/B are the CCWS, the emergency feedwater system (EFWS), the electrical panels, the Class 1E electric/instrumentation components, and the HVAC fans and dampers for these systems.

- A/B

  The A/B adjoins the R/B. There are no SSCs to be protected from flooding the A/B.

- T/B

  The T/B adjoins the NRCA of the R/B. The T/B is subject to flooding from a variety of potential sources including the circulating water, service water, condensate/feedwater, CCW, demineralized water, and fire protection systems.

  The bounding flooding source for the T/B is a break in the circulating water piping.

A break in the circulating water system (CWS) piping would result in water flowing into the lower elevation of the T/B, elevation -18 ft, 0 in. When the flood water fills the lower level of the T/B, to prevent the CWS flood volume from affecting R/B equipment, a flood relief panel system is built into the T/B exterior walls. Passive actuation of the flood relief panels allows the CWS flood volume to drain out to the yard area. In the yard area, the flood volume is directed away from the plant structures by virtue of the site grading and yard drainage system. In addition, the water tight doors are installed in the doorways at ground level between T/B and R/B.

There is no equipment to be protected from flooding in the T/B.

3.4.1.4 Evaluation of External Flooding

The following steps outline the external flood evaluation process:

(1) Identification of components required to maintain functionality during a flood event

(2) Identification of flood sources and flow paths relative to the identified components

(3) Risk assessment for components affected by a flood event

(4) Failure mode and effects analysis for components affected by a flood event

(5) Determination of appropriate actions to preclude impact to component safety functions

For purposes of the US-APWR standard plant design, the plant site DBFL caused by external source flooding is discussed in Section 2.4.

The PMP for the US-APWR standard plant design is defined in Section 2.4.

Based on the DBFL and the plant elevation with regard to the DBFL as presented in Section 2.4, the safety-related SSCs are protected from flooding along with the static and dynamic forces, if applicable, associated with a design basis flood in accordance with the requirements of RG 1.102 (Reference 3.4-3). The COL Applicant is to demonstrate the DBFL bounds their specific site, or is to identify and address applicable site conditions where static flood level exceed the DBFL and/or generate dynamic flooding forces.

3.4.1.5 Evaluation of Internal Flooding

The following steps outline the internal flood evaluation process:

(1) Identification of components required to maintain functionality during a flood event

(2) Identification of flood sources and flow paths relative to the identified components

(3) Risk assessment for components affected by a flood event

(4) Failure mode and effects analysis for components affected by a flood event

(5) Determination of appropriate actions to preclude impact to component safety functions

3.4.1.5.1 PCCV Flood Events

The interior of the US-APWR PCCV is divided into three elevations for the purposes of this discussion:

(1) Elevation 25 ft, 3 in. (second floor), which separates the refueling water storage pit (RWSP) and the balance of the PCCV, with openings for the stairway access to the RWSP and alternate water flow paths

(2) Elevation 50 ft, 2 in. (third floor), which corresponds with the middle doorway into each of the SG compartments (the floor corresponding to this elevation is concrete)

(3) Elevation 76 ft, 5 in. (fourth floor/operating floor), which corresponds with the upper doorway into each of the SG compartments (the floor corresponding to this elevation is concrete)

The PCCV is further partitioned by the four SG compartments, the pressurizer compartment, the regenerative heat exchanger room, the letdown heat exchanger room, the excess letdown heat exchanger room, the refueling cavity, the HVAC header compartment, the PCCV drain pump room, and the reactor cavity.

In order to assure the long-term cooling performance after an accident event, spray water from the CSS or spill water from a damaged component is collected in the RWSP at the bottom of the PCCV. The partitions above the RWSP are designed to permit containment spray water and spill water to flow freely through the PCCV to the RWSP.

This is accomplished through floor drains in the regenerative heat exchanger room, the letdown heat exchanger room, and the excess letdown heat exchanger room. Water flowing into each room is drained by way of the floor drain to the PCCV sump in the PCCV drain pump room (elevation 3 ft, 7 in.). If the PCCV sump is full or if the floor drain is clogged, water will flow from each area/compartment through the flow paths described as follows:

- Water on the elevation 76 ft, 5 in. concrete floor flows to the PCCV drain pump room through the floor drain, or alternatively, flows to the elevation 25 ft, 3 in. floor through the stairwells and equipment hatch opening.
- Water on the elevation 50 ft, 2 in. concrete floor flows to the PCCV drain pump room through the floor drain, or alternatively, flows to the elevation 25 ft, 3 in. floor through the stairwells and equipment hatch opening.
- Water in the SG compartments flows across the floor of the HVAC header compartment to the drain line into the reactor cavity. The water then fills the reactor cavity. After the water level in the reactor cavity equalizes with the water in the SG compartment, the water level rises until it exceeds elevation 25 ft, 3 in. When the flood water in the SG compartment exceeds elevation 25 ft, 3 in., it then flows out through the doorway in the secondary shield wall to the elevation 25 ft, 3 in. floor.

- Water at the pressurizer compartment flows to the SG compartment by way of the inlet/outlet to the SG compartment.
- Water in the regenerative heat exchanger room, the letdown heat exchanger room, and the excess letdown heat exchanger room flow out their respective entrance doorways. The flow path from there is to the respective level floor drains or through the alternate paths.
- Water flowing onto the elevation 25 ft, 3 in. floor flows to the RWSP through the 18 in. transfer piping provided at 10 places on the floor surface and into the flow to the PCCV drain pump room through the stair opening on the floor surface. Water also flows into the HVAC header compartment from the PCCV drain pump room by way of a walkway through the lower primary shield wall.

Thus, flood waters in the containment reaches the RWSP, the HVAC header compartment, the PCCV drain pump room, and the reactor cavity.

Inside the containment, the largest water retaining components are the refueling cavity, and the RWSP. The RWSP and the refueling cavity are robust reinforced concrete seismic category I structures with thick walls which have been designed for all applicable loads, including the potential in-containment missile loads and hydrodynamic loads. Due to their robust design, a postulated failure of these structures is not credible. Additionally, the combined fuel transfer canal/reactor cavity pit during all but refueling operations is dry. Since a LOCA represents the worst case flooding event, sloshing is not a factor in PCCV flooding.

The maximum flooding event in the containment is a result of a LOCA. During a LOCA, water held in the RCS and water from the accumulator tanks is injected into the RCS, and flows from the damaged main coolant pipe. Additionally, spray and injection of the RWSP volume is assumed.

The volume of water from a LOCA is conservatively assumed to be equal to the volume of the RCS volume, the four accumulator tank volumes, and the volume of the RWSP for a total volume of 113,000 ft^3.

The total volume of storage space below the diaphragm at elevation 25 ft, 3 in. is 127,000 ft^3. All flood water is collected below the bottom-layer partition. The components to be protected are installed above this diaphragm; the SSCs inside the PCCV such as emergency letdown line isolation valve, safety depressurization valve and pressurizer backup heater are not affected by flood waters.

3.4.1.5.2 Reactor Building Flooding Events

The US-APWR R/B consists of a RCA separated physically by concrete walls and/or floors and a NRCA. These concrete walls are designed so that flooding may not cross between mutual areas by installing penetrations for pipe, ducts, and cable trays above the maximum flooding level and/or by sealing the penetrations. As recommended by SRP 14.3.2 (Reference 3.4-4), penetrations in divisional walls are at least 8 ft, 3 in. above the floor, and safety-related electrical, instrumentation, and control equipment are located sufficiently above the flood level.

Inside the R/B, the cask wash down pit, the new fuel storage pit, and the interconnected spent fuel pit, the transfer canal, the cask loading pit, and the fuel inspection pit, with the tops of these open pits all located at plant elevation 76 ft, 5 in., represent potential large volumes of water. These pits are robust seismic category I structural reinforced concrete with thick walls, which have been designed for applicable loads, including hydrodynamic loads. Due to their robust design, postulated failure of these structures is not credible. Flood water that could be displaced out of these pits due to hydrodynamic effects such as sloshing is enclosed within pit area by water tight compartmentalization.

The R/B is adjoined by the A/B, and as such, the A/B consists of a RCA and a NRCA which are physically separated. Doorways with water-tight doors are provided between the RCA of the R/B and the RCA of the A/B. Similarly, doorways with water-tight doors are provided between the NRCA of the R/B and the NRCA of the A/B, and between the NRCA of R/B and T/B.

The NRCA of the R/B adjoins the PS/B, with doorways providing potential flow paths through the areas.

3.4.1.5.2.1 Radiological Controlled Area

The RCA is arranged with each of the four safety trains separated into four quadrants around the outside of the PCCV. Physically, individual train equipment within the four quadrants is located to provide the separation between the same equipment of the other three trains within the confines of the R/B footprint. This separation minimizes the probability of an event affecting more than one of the safety trains at a given time.

All floors in the RCA of the R/B are divided into the two areas, east and west, by concrete walls and/or water-tight doors. The concrete walls are designed to prevent flood water migration from one safety train to another. This is accomplished by installing piping, electrical conduit, HVAC duct, cable trays, etc., penetrations above the maximum flood level and/or by sealing penetrations.

Two types of drain systems are provided in the RCA of the R/B outside the PCCV; an equipment drain system and a room/compartment floor drain system. The equipment drain system collects water leaking from components and routes the leakage to the R/B sump tank at elevation -26 ft, 4 in. (basement first floor). The floor drain water is collected in the R/B sump tank at elevation -26 ft, 4 in. The floor drains of safeguard component rooms are designed to be routed from their collection area to the R/B sump tank using piping independent of the other floor drains.

The floor drains of the east and west areas are connected and ultimately go into the R/B sump tank at elevation -26 ft, 4 in. However, the normally closed valve or check valve is installed in the floor drain pipe before the connection in order to prevent the east (or west) area flood water running to the west (or east) area through the floor drain. Therefore, east and west areas are evaluated as independent areas.

Elevation -26 ft, 4 in.

The equipment to be protected in the east area of RCA at elevation -26 ft, 4 in. are the A and B train SI pumps and the A and B train CS/RHR pumps. Equipment to be protected in the west area are the C and D train SI pumps and the C and D train CS/RHR pumps.

In both the east and west area, the SI pump rooms and CS/RHR pump rooms are isolated by concrete walls and water-tight door. Moreover, floor drains of these rooms are separated by closed valve or check valve for each trains. The other equipment rooms are isolated by concrete walls, the fireproof doors and/or air-tight doors which are not water-tight. Therefore, flood water is assumed to run across the area except the SI pump rooms and CS/RHR pump rooms.

Flood Events are considered as follows;

- Earthquake

  Most of equipments and piping contained water in the RCA of the R/B are excluded from flooding source because these components are designed as seismic category I or II. However, it is assumed that there is other miscellaneous piping designed as non-seismic, and the amount of water contained by this piping is considered as flood water.

  The amount of water contained by other miscellaneous piping is 1,060 ft^3.

- High-energy line break/moderate-energy line break (HELB/MELB)

  The high energy piping in the RCA of R/B consists of the charging pipe, letdown pipe, and seal water injection piping of the CVCS. Of this piping, the line break occurs in the charging piping at the charging pump discharge nozzle. The water volume released by this break consists of the following:

  - The total content of the VCT, 670 ft^3.
  - The volume of water from the RWSAT, which would be released between the time of the HELB event and the time of the RWSAT isolation from the line break. The gravity flow rate from the RWSAT is 14,400 ft^3/hr. The time duration between HELB and isolation is taken as 45 minutes. Thus, the volume of the RWSAT released is 10,800 ft^3.
  - The associated pipe, assumed to be 100 ft^3, between the two tanks and the charging pump.

  This total water volume from the HELB event is 11,570 ft^3.

  The flow path from the RWSAT is through a six in. pipe line containing two parallel sets of motor operated valves with two valves in each set. These valves are normally closed but are open upon signal from the reactor make-up water system. The HELB is conservatively considered to occur when the valves of the reactor make-up water system have been actuated open and remain open until actuated closed by plant personnel. The amount of time allotted to transpire between the HELB event and closure actuation is conservatively assumed to be 45 minutes. Detection of the HELB occurs through multiple paths. The primary path is the charging pump trip logic circuit. The secondary path is the charging pump rooms leak detection system. In addition, the CVCS line from the RWSAT and the charging pumps contains a flow indicating orifice which dually serves as an indicator of excess flow from the RWSAT and also as flow restrictor. Credit for the flow restriction is not taken.

- Fire Fighting Operations

  Flooding contribution from fire-fighting operations is based on the full operation of two hose stations for 2 hours. The flow rate from 1 hose station is 125 gpm. With two stations operating for 2 hours, the total volume of water is 4,010 ft^3.

Based on the above, the worst case flooding on the west side of the R/B is a HELB at 11,570 ft^3. On the east side of the plant, the worst case flooding is an earthquake followed by fire fighting operations due to an earthquake induced fire at 5,070 ft^3.

The square footage of floor area subject to flooding at elevation -26 ft, 4 in. is as follows:

- East side: 3,400 ft^2
- West side: 4,150 ft^2

Based on these values, the maximum water levels are as follows:

- East side: 1.49 ft above elevation -26 ft, 4 in.
- West side: 2.79 ft above elevation -26 ft, 4 in.

The SI pump and CS/RHR pump are installed in a room which prevents flow-in water by water-tight door, and floor drains of these rooms are separated by closed valve or check valve for each trains. Therefore, the pumps are not flooded. Instrumentation of the SI pump and CS/RHR pump are installed above the flood water level.

Elevation 3 ft, 7 in.

Flood waters occurring above elevation -26 ft, 4 in. drain to floor elevation -26 ft, 4 in. through floor drains, stairwell, elevator shaft and/or equipment hatch. However, the evaluation above elevation -26 ft, 4 in. conservatively assumes that the flooding water is not drained.

The equipment to be protected in the east area of RCA at elevation 3 ft, 7 in. are the A and B train CS/RHR heat exchanger (HX) and the A and B train safeguard component area air handling unit. The equipment to be protected in the west area of RCA at elevation 3 ft, 7 in. are the C and D train CS/RHR HX and the C and D train safeguard component area air handling unit.

The CS/RHR HX and the safeguard component area air handling unit are isolated by concrete walls and water-tight door. Moreover, floor drains of these rooms are separated from floor drains outside of these rooms and are also separated for each train. Therefore, flood water is assumed to run across the area except the CS/RHR HX and the safeguard component area air handling unit rooms.

Flood Events are considered as follows:

- Earthquake

  The total water volume from the earthquake event is same as that of elevation -26 ft, 4 in.

- HELB/MELB

  HELB event is not a concern, because the postulated pipe break at the discharge nozzle of the CVCS charging pump occurs at a location on a lower floor level.

- Fire Fighting Operations

  The total water volume from the fire fighting operation events is same as that of elevation -26 ft, 4 in.

Based on the flood events described above, the worst case results are from a combination of earthquake and fire fighting operations. The total volume of flood water caused by this combination is 5,070 ft^3 in both the east and west area.

The footage of subject area and the water level are as follows:

- East side: 7,550 ft^2 area, 0.67 ft water height above elevation 3 ft, 7 in.
- West side: 5,850 ft^2 area, 0.87 ft water height above elevation 3 ft, 7 in.

CS/RHR HX and safeguard component area air handling unit are installed in the room which prevents flow-in water by water-tight door, and floor drains of these rooms are separated from floor drains outside of these rooms and are also separated for each trains. Therefore, components are not flooded. The instrumentation of the CS/RHR HX and safeguard component area air handling unit are installed above the flood water level.

Elevation 25 ft, 3 in.

The equipment to be protected in the east and west area of RCA elevation 25 ft, 3 in. are the containment isolation valves in piping penetration room.

Flood Events are considered as follows:

- Earthquake

  The total water volume from the earthquake event is same as that of elevation -26 ft, 4 in.

- HELB/MELB

  HELB event is not a concern, because the postulated pipe break at the discharge nozzle of the CVCS charging pump occurs at a location on a lower floor level.

- Fire Fighting Operations

  The total water volume from the fire fighting operation events is same as that of elevation -26 ft, 4 in.

Based on the flood events described above, the worst case results are from a combination of earthquake and fire fighting operations. The total volume of flood water caused by this combination is 5,070 ft^3 in both the east and west area.

The both east and west areas are isolated by concrete walls and the fireproof doors and/or air-tight doors which are not water-tight. Therefore, flood water is assumed to run across the each area.

The footage of subject area and the water level are as follows;

- East side: 9,400 ft^2 area, 0.54 ft water height above elevation 25 ft, 3 in.
- West side:7,400 ft^2 area, 0.69 ft water height above elevation 25 ft, 3 in.

The containment isolation valve motors are installed above the flood water level.

Elevation 50 ft, 2 in.

The equipments to be protected in the east and west area of RCA elevation 50 ft, 2 in. are annulus emergency exhaust filtration unit and junction boxes and cables in the electrical penetration rooms.

Flood Events are considered as follows;

- Earthquake

  The total water volume from the earthquake event is same as that of elevation -26 ft, 4 in.

- HELB/MELB

  HELB event is not a concern, because the postulated pipe break at the discharge nozzle of the CVCS charging pump occurs at a location on a lower floor level.

- Fire Fighting Operations

  The total water volume from the fire fighting operation events is same as that of elevation -26 ft, 4 in.

Based on the flood events described above, the worst case results are from a combination of earthquake and fire fighting operations. The total volume of flood water caused by this combination is 5,070 ft^3 in both the east and west area.

The both east and west areas are isolated by concrete walls and the fireproof doors and/or air-tight doors which are not water-tight. Therefore, flood water is assumed to run across the each area.

The footage of subject area and the water level are as follows:

- East side: 9,400 ft^2 area, 0.54 ft above elevation 50 ft, 2 in.
- West side: 6,650 ft^2 area, 0.76 ft above elevation 50 ft, 2 in.

The annulus emergency exhaust filtration unit foundations (top of concrete) height is 1.0 ft above floor elevation 50 ft, 2in. As such, the annulus emergency exhaust filtration units are not flooded. The junction boxes and cables in the electrical penetration rooms is designed to be located at heights above the level of flood water.

Elevation 76 ft, 5 in.

Elevation 76 ft, 5 in. of the RCA is divided into two areas, east and west, by concrete wall and water-tight doors and the fuel handling area. The fuel handling area is isolated

by installing the water-tight doors to walkway and/or doorways of stairwell to prevent flood water by sloshing of SFP spilling to other area.

The equipment to be protected in the east and west area of RCA elevation 76 ft, 5 in. are junction boxes and cables in electrical penetration room isolation valves.

There is no equipment to be protected in the fuel handling area.

Flood Events are considered as follows;

- Earthquake

  The total water volume from the earthquake event is same as that of elevation -26 ft, 4 in.

- HELB/MELB

  HELB event is not a concern, because the postulated pipe break at the discharge nozzle of the CVCS charging pump occurs at a location on a lower floor level.

- Fire Fighting Operations

  The total water volume from the fire fighting operation events is same as that of elevation -26 ft, 4 in.

Based on the flood events described above, the worst case results are from a combination of earthquake and fire fighting operations. The total volume of flood water caused by this combination is 5,070 ft^3 in both the east and west area.

The both east and west areas are isolated by concrete walls and the fireproof doors and/or air-tight doors which are not water-tight. Therefore, flood water is assumed to run across the each area.

The footage of subject area and the water level are as follows:

- East side: 5,850 ft^2 area, 0.87 ft above elevation 76 ft, 5 in.

- West side: 5,100 ft^2 area, 0.99 ft above elevation 76 ft, 5 in.

The junction boxes and cables in the electrical penetration rooms is designed to be located at heights above the level of flood water.

3.4.1.5.2.2 NRCA

The NRCA is arranged into rooms/compartments to provide a physical separation of the water containing components from the electrical components. This separation, along with the associated physical barriers (concrete walls and floors), minimizes the probability of component leaks affecting the electrical components.

All floors in the NRCA of the R/B are divided into the two areas, east and west, by concrete walls and/or water-tight doors. The concrete walls are designed to prevent flood water migration from one safety train to another. This is accomplished by installing

piping, electrical conduit, HVAC duct, cable trays, etc., penetrations above the maximum flood level and/or by sealing penetrations.

Two types of drain systems are provided in the NRCA of the R/B - an equipment drain system and a room/compartment floor drain system. The equipment drain system collects water leaking from components and routes the leakage to the non-radioactive drain sump. The floor drain water is also routed to the non-radioactive drain sump at elevation -26 ft, 4 in. The floor drains of the east and west areas are connected and finally go into the non-radioactive drain sump. However, the normally closed valve or check valve is installed in the floor drain pipe before the connection in order to prevent the east (or west) area flood water running to the west (or east) area through the floor drain. Therefore, east and west areas are evaluated as independent areas.

The drains from the NRCA of A/B and the PS/B are also collected in the non-radioactive drain sump. The water in the non-radioactive drain sump is transferred to the T/B sump by sump pump. The evaluation of flooding in the NRCA area of the R/B conservatively excludes the use of the sump pump.

The drains from the main steam (MS) / feedwater (FW) piping area is directly collected in the T/B sump. The MS/FW piping area is addressed separately below.

Elevation -26 ft, 4 in.

The systems to be protected at elevation -26 ft, 4 in. of the NRCA of the R/B are the four trains (A, B, C, and D) of the component cooling water (CCW) heat exchanger and pump and four trains (A, B ,C and D) of the emergency feedwater (EFW) pump.

The east side includes the two trains (A and B) of the CCW HX and pump rooms, and two trains (A and B) of the EFW pump room. The west side includes the two trains (C and D) of the CCW HX and pump room, two trains (C and D) of the EFW pump room, and the non-radioactive drain sump.

The A and D train EFW pump rooms are isolated by concrete walls and water-tight door and the check valve to prevent backflow is installed floor drain. Other equipment rooms are isolated by concrete walls and the fireproof doors which are not water-tight. Therefore, flood water is assumed to run across the area except the A and D train EFW pump room.

In addition, since the doorways to the PS/B which adjoined each east and west area of R/B are not water-tight, flood water of the NRCA of R/B is assumed to flow into the whole area of the PS/B, elevation -26 ft, 4 in.

Therefore, the subject area of east is the east side of R/B and PS/B except the A train EFW pump room. Similarly, the subject area of west is the west side of R/B and PS/B except the D train EFW pump room.

Flood events are considered as follows:

- Earthquake

  In the flooding events caused by an earthquake, the following components are assumed to fail and release all of their contents:

- Non-seismic category I piping in the NRCA of the R/B, total volume of water held by these pipe lines is 700 ft^3.
- Non-seismic category I components in the adjacent A/B are considered damaged. Water from these failed components is conservatively assumed to flow to the NRCA portion of the R/B through floor drains. The components in these buildings which are not seismic category I are associated with the demineralized water system, non-safety chilled water. The total volume of water held by these systems is 1,590 ft^3. Since floor drains of the NRCA of the A/B are collected by non-radioactive drain sump, the water of these areas does not flow into the east area. Therefore, the water generated in the NRCA of the A/B is taken into consideration only to evaluation of the west area.

- HELB/MELB

  HELB event is not a concern, because there are no piping breaks, which are assumed to occur in the subject area.

- Fire Fighting Operations

  The flooding contribution from fire fighting operations is based on the full operation of two hose stations for 2 hours. The flow rate from one hose station is 125 gpm. With two stations operating for 2 hours, the total volume of water is 4,010 ft^3.

Based on the flood events described above, the worst case results are from a combination of earthquake and fire fighting operations. The total volume of flood water caused by this combination is as follows:

- East side: 4,710 ft^3

- West side: 6,300 ft^3

The square footage of floor area subject to flooding at elevation -26 feet, 4 inches is as follows:

- East side: 10,000 ft^2

- West side: 10,000 ft^2

Base on these values, the maximum water level is as follows:

- East side: 0.47 ft above elevation -26 ft, 4 in.

- West side: 0.63 ft above elevation -26 ft, 4 in.

The pump foundations (top of concrete) height is 1.0 foot above floor elevation -26 ft, 4 in. As such, the pumps are not flooded. The instrumentation of each pump is designed to be located at heights above the level of flood water.

Elevation 3 ft, 7 in.

Flood waters occurring above elevation -26 ft, 4 in. drain to floor elevation -26 ft, 4 in. through floor drains, stairwell, elevator shaft and/or equipment hatch. However, the evaluation above elevation -26 ft, 4 in. conservatively assumes that the flooding water is not drained.

The equipment to be protected in the east area of NRCA at elevation 3 ft, 7 in. are the A and B train Class 1E electrical panels. Similarly, the equipment to be protected in the west area is the C and D train Class 1E electrical panels. The Class 1E electrical panel rooms are isolated from corridor by concrete walls and water-tight door. There are no floor drains in the Class 1E electrical panel rooms.

Flood events are considered as follows:

- Earthquake

  The total water volume from the earthquake event is same as that of elevation -26 ft, 4 in.

- HELB/MELB

  HELB event is not a concern, because there are no piping breaks, which are assumed to occur in the subject area.

- Fire Fighting Operations

  The total water volume from the fire fighting operation events is same as that of elevation -26 ft, 4 in.

Based on the flood events described above, the worst case results are from a combination of earthquake and fire fighting operations. The total volume of flood water caused by this combination is 4,710 ft^3 in both the east and west area.

The footage of corridor area and the water level are as follows:

- East side: 1,650 ft^2 area, 2.85 ft above elevation 3 ft, 7 in.

- West side:1,600 ft^2 area, 2.94 ft above elevation 3 ft, 7 in.

Class 1E electrical panels are installed in the room which prevents flow-in water by water-tight door. Therefore, panels are not flooded.

Elevation 25 ft, 3 in.

The equipment to be protected in the NRCA portion of elevation 25 ft, 3 in. is the main control panel and Class 1E I&C panels. The main control room and Class 1E I&C rooms are isolated from corridor by concrete walls and water-tight door.

Flood events are considered as follows;

- Earthquake

  The total water volume from the earthquake event is same as that of elevation -26 ft, 4 in.

- High-Energy Line Break/Moderate-Energy Line Break (HELB/MELB)

  HELB event is not a concern, because there are no piping breaks, which are assumed to occur in the subject area.

- Fire Fighting Operations

  The total water volume from the fire fighting operation events is same as that of elevation -26 ft, 4 in.

Based on the flood events described above, the worst case results are from a combination of earthquake and fire fighting operations. The total volume of flood water caused by this combination is 4,710 ft^3 in both the east and west area.

The footage of corridor area and the water level are as follows;

- East side: 1,600 ft^2 area, 2.94 ft above elevation 25 ft, 3 in.

- West side: 1,700 ft^2 area, 2.77 ft above elevation 25 ft, 3 in.

The main control panel and Class 1E I&C panels are installed in the room which prevents flow-in water by water-tight door. Therefore, panels are not flooded.

Elevation 50 ft, 2 in.

The equipment to be protected in the elevation 50 ft, 2 in. of the NRCA is the main control room air handling units and Class 1E electrical room air handling units.

Flood events are considered as follows;

- Earthquake

  The total water volume from the earthquake event is same as that of elevation -26 ft, 4 in.

- High-Energy Line Break/Moderate-Energy Line Break (HELB/MELB)

  HELB event is not a concern, because there are no piping breaks, which are assumed to occur in the subject area.

- Fire Fighting Operations

  The total water volume from the fire fighting operation events is same as that of elevation -26 ft, 4 in.

Based on the flood events described above, the worst case results are from a combination of earthquake and fire fighting operations. The total volume of flood water caused by this combination is 4,710 ft^3 in both the east and west area.

The footage of subject area and the water level are as follows;

- East side: 5,800 ft^2 area, 0.81 ft above elevation 50 ft, 2 in.

- West side: 5,600 ft^2 area, 0.84 ft above elevation 50 ft, 2 in.

The air handling unit foundations (top of concrete) height is 1.0 foot above floor elevation 50 ft, 2 in. As such, the air handling units are not flooded.

Elevation 76 ft, 5 in.

Elevation 76 ft, 5 in. of the NRCA is divided into the MS/FW piping area and other areas by concrete walls and water-tight doors. Moreover, the MS/FW piping area is divided into the two areas, east and west, by the concrete wall.

The equipment to be protected in the MS/FW piping area is the MS isolation valve, main feedwater isolation valve (MFIV), and MS depressurization valve.

The equipment to be protected in the subject area except the MS/FW piping area is the instrumentation of the EFW pit.

Flood events in the MS/FW piping area are considered as follows:

- Earthquake

  The total water volume from the earthquake event is same as that of elevation -26 ft, 4 in.

- HELB/MELB

  In the flooding events caused by the postulated failure of piping, the high energy piping consists of main steam, feedwater, and SG blowdown piping, within the MS/FW piping area. A rupture of the feedwater piping in this area represents the worst case flooding scenario for this area. This is based on a 1.0 ft^2 break, as defined in Section 3.6, in the feedwater piping upstream of the feedwater check valve. The rupture at this point results in feedwater from the SG and from within the associated feedwater piping flow back into and flooding the compartment. In addition, the main feedwater pump is assumed be pumping at the maximum flowrate. As a result of this scenario, the water level in the SG would decline resulting in a low level alarm/signal from the SG water level indication instrumentation. The low water signal initiates the feedwater isolation circuit. Based on actuation of the feedwater isolation circuit, the main feedwater pump is tripped, which stops the main feedwater pump. The volume of water which floods the main steam/feedwater pipe/relief valve compartment, based on the time required to reach the low water level set point, is 12,180 ft^3. The flood water occurring in the main steam/feed water piping room is drained to the T/B sump through the floor drain. Conservatively assuming that the drain line is clogged, the flood water will not be discharged by way of the floor drain.

- Fire Fighting Operations

  The total water volume from the fire fighting operation events is same as that of elevation -26 ft, 4 in.

Based on the above, the worst case flooding in the MS/FW piping area is a piping rupture at 12,180 ft^3. The floor area of the MS/FW piping area is 2,640 ft^2; therefore the water level caused by piping rupture area is 4.6 ft above elevation 65 ft, 0 in, the bottom of the MS/FW piping area. The actuators of valve to be protected are designed to be located at heights above the level of flood water. In addition, the bottom of doorways to

the MS/FW piping area is at elevation 76 ft, 5 in. This is 11 ft, 5 in. above the floor at elevation 65 ft, 0 in, and the doorways located level is higher than the level of flood water. Therefore, the flood water flow from the MS/FW piping area to the balance of the NRCA portion of the R/B is not a consideration.

Flood events in the subject area except MS/FW piping room are considered as follows;

- Earthquake

  The total water volume from the earthquake event is same as that of elevation -26 ft, 4 in. The EFW pit is isolated by installing the water-tight doors to doorway to prevent flood water by sloshing of EFW pit spilling to other area.

- HELB/MELB

  HELB event is not a concern, because maximum flood level within the MS/FW piping area is well below the door elevation as described above.

- Fire Fighting Operations

  The total water volume from the fire fighting operation events is same as that of elevation -26 ft, 4 in.

Based on the flood events described above, the worst case results are from a combination of earthquake and fire fighting operations. The total volume of flood water caused by this combination is 4,710 ft^3 in both the east and west area.

The footage of subject area and the water level are as follows;

- East side: 3,500 ft^2 area, 1.35 ft above elevation 76 ft, 5 in.

- West side:4,100 ft^2 area, 1.15 ft above elevation 76 ft, 5 in.

The instrumentation of the EFW pit is designed to be located at heights above the level of flood water.

3.4.2 Analysis Procedures

The static and dynamic effects of the design-basis flood or groundwater conditions, which are identified in Section 2.4, are applied to seismic category I structures. Section 3.8 specifies the applicable codes, standards, and specifications used in the design of seismic category I structures. The loads and load combination subsections of Section 3.8 take into consideration the static and dynamic loadings on seismic category I structures including hydrostatic loading as the result of the design-basis flood and/or ground conditions identified in Section 2.4. Section 3.8 also provides the design and analysis procedures used to transform the static and dynamic effects of the DBFL and ground water levels applied to seismic category I structures to assure their design meet the applicable acceptance criteria.

The COL Applicant is to identify any site-specific physical models used to predict prototype performance of hydraulic structures and systems involving an unusual design or configuration, or for a design or operating bases involving thermal and erosion problems.

3.4.3 Combined License Information

COL 3.4(1) *The COL Applicant is to address the site-specific design of plant grading and drainage.*

COL 3.4(2) *The COL Applicant is to demonstrate the DBFL bounds their specific site, or is to identify and address applicable site conditions where static flood level exceed the DBFL and/or generate dynamic flooding forces.*

COL 3.4(3) *Site-specific flooding hazards from engineered features, such as from cooling water system piping, is to be addressed by the COL Applicant.*

COL 3.4(4) *The COL Applicant is to address any additional measures below grade to protect against exterior flooding and the intrusion of ground water into seismic category I buildings and structures.*

COL 3.4(5) *The COL Applicant is to identify and design, if necessary, any site-specific flood protection measures such as levees, seawalls, floodwalls, site bulkheads, revetments, or breakwaters per the guidelines of RG 1.102 (Reference 3.4-3), or dewatering system if the plant is not built above the DBFL.*

COL 3.4(6) *The COL Applicant is to identify any site-specific physical models used to predict prototype performance of hydraulic structures and systems.*

3.4.4 References

3.4-1 Reactor Site Criteria, Energy. Title 10 Code of Federal Regulations Part 100, U.S. Nuclear Regulatory Commission, Washington, DC.

3.4-2 General Design Criteria for Nuclear Power Plants, Domestic Licensing of Production and Utilization Facilities, Energy. Title 10 Code of Federal Regulations Part 50, Appendix A, U.S. Nuclear Regulatory Commission, Washington, DC.

3.4-3 Flood Protection for Nuclear Power Plants. Regulatory Guide 1.102, Rev. 1, U.S. Nuclear Regulatory Commission, Washington, DC, September 1976.

3.4-4 "Structural and Systems Engineering - Inspections, Tests, Analyses, and Acceptance Criteria," Standard Review Plan for the Review of Safety Analysis Reports for Nuclear Power Plants. NUREG-0800 Standard Review Plan 14.3.2, U.S. Nuclear Regulatory Commission, Washington, DC, March 2007.

3.4-5 Design Basis Floods for Nuclear Power Plants. Regulatory Guide 1.59, Rev. 2, U.S. Nuclear Regulatory Commission, Washington, DC, August 1977.

3.4-6 Subcompartment Pressure and Temperature Transient Analysis in Light Water Reactors. ANSI/ANS 56.10-1987, Section 3, American National Standards Institute /American Nuclear Society.

3.4-7 Design Criteria for Protection Against the Effects of Compartment Flooding in Light Water Reactor Plants. ANSI/ANS-56.11-1988, American National Standards Institute /American Nuclear Society.

3.5 Missile Protection

GDC 4 of Appendix A to 10 CFR 50 (Reference 3.5-1) requires safety-related SSCs to be protected from the effects of missiles. This includes all SSCs within containment and the containment itself. The containment is defined for the US-APWR as the PCCV. In addition, GDC 2 of Appendix A to 10 CFR 50 (Reference 3.5-1) also requires that safety-related SSCs be designed to withstand the effects of natural phenomena, which includes missiles potentially generated by tornadoes and hurricanes and similar extreme winds.

In accordance with GDC 2 and GDC 4 of 10 CFR 50, the safety-related areas of the US-APWR contain SSCs that provide the capability to safely shut down the reactor and maintain it in a safe-shutdown condition while also protecting the integrity of the RCPB and maintaining offsite radiological dose/concentration levels within the limits defined in 10 CFR 100 (Reference 3.5-2).

Missiles may be generated by pressurized components, rotating machinery, explosions within the plant, falling objects, and by tornados or transportation accidents external to the plant. This section discusses missile protection for the following sources:

- Internally generated missiles (Outside PCCV)
- Internally generated missiles (Inside PCCV)
- Turbine missiles
- Missiles generated by tornadoes and extreme winds
- Site proximity missiles (Except aircraft)
- Aircraft hazards

Missile protection is achieved through the following criteria:

- Safety-related SSCs are protected from missiles to achieve and maintain safe shutdown of the plant, and prevent a significant release of radioactivity.
- In addition to a postulated missile and any direct consequences of the missile, a single active component failure is considered in systems used to mitigate the consequences of the postulated missile impact and achieve a safe-shutdown condition. Only safety-related systems are assumed for safe shutdown coincident with a single active failure, although non safety-related systems are available to support safe shutdown if they are not affected by the missile.
- Missiles are postulated to occur as a result of a single failure of a retention mechanism, unless the generation of missile is shown as not credible. Unrelated failure of two retention mechanisms is not postulated to generate simultaneous missiles.
- A single active component failure need not be considered in the remaining train(s), or associated supporting trains, when the postulated missile is generated in one of two or more redundant trains of a dual-purpose safety-related fluid system designed to seismic category I standards and powered from either onsite or offsite sources.

- A postulated missile from the RCS is mitigated to prevent loss of integrity of the primary containment, main steam, feedwater, or other loop of the RCS.
- A postulated missile from any system other than the RCS is mitigated to prevent loss of integrity of the containment or the RCPB.
- A postulated missile, except for tornado events, does not occur concurrent with other plant accidents or severe natural phenomena.
- In the event of a postulated missile that results in a trip of the turbine generator (T/G), offsite power is assumed to be unavailable.

The SSCs required to be protected from postulated missiles inside and outside containment are discussed in this section. For these systems, Section 3.2 and Section 3.11 list applicable SSCs, their location, seismic category, and quality group/equipment classifications. General arrangement drawings showing locations of the SSCs are given in Section 1.2.

Missile protection for SSCs important to safety is adequate if provided by one or more of the following methods:

- Locating the system or component in a missile-proof structure
- Separating redundant systems or components for the missile path or range
- Providing local shields and barriers for systems and components
- Designing the equipment to withstand the impact of the most damaging missile
- Providing design features to prevent the generation of missiles
- Orienting missile sources to prevent missiles from striking equipment important to safety

3.5.1 Missile Selection and Description

3.5.1.1 Internally Generated Missiles (Outside Containment)

Missiles are postulated to be associated with failures of high-energy fluid system components, over-speed failures of rotating components (e.g., motor-driven pumps and fans), explosions within the plant, and gravitational missiles, including falling objects resulting from a non-seismically designed SSC during a seismic event. The design bases consider features for the continued safe operation or a shutdown during all operating conditions, operational transients, and postulated accident conditions.

The following components have the potential to produce missiles:

1. Items containing high-energy fluids

   If any item containing high-energy fluid is assumed to have been damaged, broken pieces could become missiles when propelled by internal pressure or jet forces. Potential sources of missiles include the following:

   - RV [synonymous with pressure vessel]
   - Pipes

- Valves, including relief valves
- CRDM
- Fittings of RV or pipes (pressurizer heater or instrument well)

2. High-speed rotating equipment

   If any rotating components of high-speed rotating equipment are assumed to have been damaged, missiles are possibly produced when the rotating energy is converted into translational motion energy. Potential sources of missile generation include:

   - T/G (discussed in Subsection 3.5.1.3)
   - Turbine driven pump
   - Motor driven rotating equipment
   - Gas turbine generator (GTG)
   - Fans
   - Compressors

3. Gas Explosion

   If any gas explosion is assumed to have occurred due to a leak from a facility using, storing, or producing explosive gases, including hydrogen, missiles could be produced.

4. Gravitational Missiles

   Objects accelerated by gravitational forces create the potential for missile impacts from the following sources:

   - Crane drop of heavy loads
   - Falling objects resulting from non-seismic SSCs during seismic event
   - Secondary missiles caused by a falling object striking a high-energy system
   - Unsecured maintenance equipment

Missile hazards are minimized or eliminated through the proper selection of equipment, by the arrangement of structures and equipment outside the zone of influence of safety-related SSCs, or by the provision of missile barriers designed in accordance with Subsection 3.5.3. For those cases where elimination of missile hazard is impractical, credible missiles are evaluated based on the size, energy, and trajectory of the postulated missile, and the proximity to any potentially impacted SSCs. Alternately, an evaluation is performed to determine if sufficient redundancy remains to achieve and maintain a safe-shutdown condition. No additional missile protection is required if the evaluations determine that the ability to achieve and maintain safe shutdown is maintained.

3.5.1.1.1 Missile Prevention

To prevent missiles from being generated, major equipment for the US-APWR is selected with the following considerations:

- Safety-related rotating equipment is designed such that there is insufficient energy to move the masses of their rotating parts through (perforate) the surrounding housings.
- Valves with only a threaded connection between the body and the bonnet are not used in high-energy systems. Selected valves utilize removable bonnets of the pressure-seal type, or have bolted bonnets in accordance with ASME Code, Section III (Reference 3.5-3).
- Valves located in high-energy systems utilize valve stems with at least two retention features. In addition to the stem threads, acceptable features include back seats on the stem or a power actuator, such as an air or motor operator.
- Threaded connections in high-energy systems are avoided. Welding is used for attaching appurtenances, such as drains, test connections, thermowells, and vents, to the piping or pressurized equipment. Weld connections are designed to have equal or greater design strength than the base metal.

3.5.1.1.2 Missile Selection

3.5.1.1.2.1 Missiles Not Considered Credible

The following potential missiles from internal sources outside the containment are discussed to clarify why they are not credible missile sources:

1. Items containing high-energy fluids

   a. Piping

   Missiles originating from piping under high pressure during normal operation are not considered credible due to ASME Code, Section III (Reference 3.5-3) and Section XI (Reference 3.5-4) criteria controlling quality from production through operation, material characteristics, design strengths and the preservice and inservice inspections. For non-high energy fluid systems, the systems have insufficient stored energy to generate a missile.

   b. Valves

   In the pressurized portion of the valves in high-energy piping, missiles are not considered credible due to the ASME Code, Section III (Reference 3.5-3), and Section XI (Reference 3.5-4) criteria controlling quality from production through operation, design strengths, and the preservice and inservice inspections.

   In any postulated damage of threads, the stem (valve stem) will not perforate due to the backseat or valve body being larger in diameter than the stem.

   In valves with bolted bonnets (covers), bonnets will not perforate because the remaining bolts withstand the internal pressure even when one bolt is assumed to have been damaged. In valves with pressure seals, bonnets will not perforate because they are pressed by yoke or retainer ring (cover retaining ring). In valves

of threaded bonnets having canopy seals, bonnets will not perforate due to loose thread.

2. High-speed rotating equipment

   a. Rotating Equipment

   The rotating element of motor-driven rotating equipment (pump, fan, etc.) is contained in the casing, and the induction motor is designed to withstand an over-speed. Missiles are therefore not postulated in motor driven rotating equipment.

   Missiles are not postulated in turbine-driven pumps because of the over-speed prevention system, and deliberate considerations are made in the inspection of materials, design, production, installation, and operation.

   Missiles are not postulated in the GTG because of the over-speed prevention system, deliberate considerations in the inspection of materials, design, production, installation, and operation, and casing material that prevents penetration.

   b. T/G

   Refer to Subsection 3.5.1.3 for discussion of turbine and turbine rotor missiles.

3. Gas Explosion

   A hydrogen explosion is not deemed a credible source of missile generation because equipment containing hydrogen is designed to prevent hydrogen from leaking, or to prevent hydrogen from remaining inside by concentration monitoring and ventilation.

   Battery compartments are ventilated to prevent the concentration of hydrogen. The hydrogen supply system and gas bottles are installed in a compartment independent of safety-related structures, and ventilation is provided to prevent the concentration of hydrogen.

4. Gravitational Missiles

   a. Crane drop of heavy loads

   As defined in ASME NOG-1 (Reference 3.5-5), a critical load is any lifted load whose uncontrolled movement or release could adversely affect any safety-related SSC when such a SSC is required for plant safety or could result in potential offsite exposure in excess of 10 CFR 100 limits.

   Type I cranes are defined by ASME NOG-1 (Reference 3.5-5) as those used to handle critical loads. In accordance with ASME NOG-1, Type I cranes are designed to remain in place and are equipped with single failure-proof features to prevent load drops.

   Refer to Subsection 9.1.5.1 for further discussion on the design bases for a postulated load drop by the overhead heavy load handling system of the US-APWR.

   Additionally, cranes are designed to prevent diversion and derailment. Drop prevention design is also employed based on earthquake design criteria.

Therefore, load drops and derailment of cranes do not represent credible sources of missiles that would jeopardize safety-related SSCs.

b. Falling objects resulting from non-seismic SSCs during seismic event

Seismic category II SSCs are defined as not essential for the safe shutdown of the plant, and need not remain functional during and after a safe-shutdown earthquake. However, such structures and subsystems must not fall or displace excessively where it could damage any seismic category I SSCs. Therefore, any SSCs with the potential to cause damage to safety-related SSCs are analyzed and designed using the same methods and stress limits specified for seismic category I SSCs. No non-seismic SSCs are permitted that could possibly affect the ability of the plant to achieve and maintain safe shutdown, and to maintain offsite radiological dose/concentration levels within defined limits. In addition, seismic category I SSCs are not permitted in non-seismic areas and are therefore not impacted by falling objects during a seismic event.

c. Secondary missiles caused by a falling object striking a high-energy system

Falling objects impacting a high-energy system or other surfaces may have the ability to generate secondary missiles. Falling objects are postulated to occur by either a crane drop of heavy load, or resulting from a non-seismic SSC during a seismic event. As described in the preceding paragraphs, these missiles sources are not credible, and therefore, no secondary missiles from these sources are capable of occurring.

d. Unsecured maintenance equipment

The COL Applicant is to prepare plant procedures that specify equipment required for maintenance or undergoing maintenance is to be removed from containment prior to operation, moved to a location where it is not a potential hazard to SSCs important to safety, or seismically restrained to prevent it from becoming a missile.

3.5.1.1.2.2 Missiles Considered Credible

Based on justification of non-credible missiles discussed in Subsection 3.5.1.1, non safety-related rotating equipment and non-ASME Code high-energy systems are the only missiles that may require further protection of safety-related SSCs.

3.5.1.1.2.3 Credible Sources of Internally Generated Missiles (Outside Containment)

The following credible sources of internally generated missiles outside the containment are discussed below:

1. Items containing high-energy fluids

   High-energy piping systems, if not constructed to ASME Code, Section III criteria (Reference 3.5-3), can be credible sources of missiles; however, due to mitigating features in the US-APWR design they do not pose a risk to safety-related SSCs. Such piping is separated from safety-related systems by heavy

concrete walls or SSCs are located outside the zones of postulated missile strikes.

2. High-speed rotating equipment

   Non safety-related high-speed rotating equipment located outside the PCCV can be credible sources of missiles; however, due to mitigating features in the US-APWR design, such equipment does not pose a risk to safety-related SSCs. Primary missile protection is provided by locating credible missile sources behind concrete walls and floors, and/or locating SSCs outside the zones of postulated missile strikes. For those cases where elimination of missile hazard is impractical, credible missiles are evaluated based on the size, energy, and trajectory of the postulated missile, and the proximity to any potentially impacted SSCs. Alternately, an evaluation is performed to determine if sufficient redundancy remains to achieve and maintain a safe-shutdown condition. If the ability to achieve and maintain safe shutdown is not determined, missile barriers are designed as discussed in Subsection 3.5.3.

3.5.1.2 Internally Generated Missiles (Inside Containment)

Refer to Subsection 3.5.1.1 for component types that also have the potential to produce missiles inside containment. Safety-related SSCs are identified in Section 3.2 and Section 3.11.

3.5.1.2.1 Missile Prevention

Refer to Subsection 3.5.1.1 for discussion of missile prevention applicable inside containment.

3.5.1.2.2 Missile Selection

3.5.1.2.2.1 Missiles Not Considered Credible

Discussion in Subsection 3.5.1.1 regarding missiles not considered credible is also applicable to missiles generated inside the PCCV. In addition, equipment located within the PCCV are discussed and clarified why these are not credible missile sources:

1. RCPB

   Inside the PCCV, missiles originating from the RV, SG, reactor coolant pump (RCP), pressurizer, and RCPB piping during normal operation are not considered credible due to ASME Code Section III (Reference 3.5-3) and Section XI (Reference 3.5-4) criteria controlling quality from production through operation, material characteristics, design strengths, and the preservice and inservice inspections. Additional assurances to prevent generation of missiles are provided by prudent operation of the system.

2. CRDM

   Missiles in the form of a piece of the CRDM housing or a control rod ejected rapidly from the core is not considered credible. In addition to justification equivalent to the RV, the following assurances specific to the CRDMs are provided:

- Shop hydro-testing in excess of 125% of system design pressure.
- Hydro-testing of housings to 125% of system design pressure after they are installed on the RV to the head adapters. Housings are also tested during hydro-testing of the completed RCS.
- Housings are made of materials with excellent notch toughness.
- Stress levels in the mechanism are not affected by system thermal transients at power or by thermal movement of the reactor coolant loops.
- The welds in the pressure boundary of the CRDM satisfy ASME Code, Section III (Reference 3.5-3) requirements for design, procedure, examination, and inspection.
- A control rod ejection is considered in the safety analyses in Chapter 15, and the design transients in Subsection 3.9.1.1.

3. RCP Flywheel

   The RCP, with a flywheel, is designed to prevent missiles from occurring by quality control, inservice inspection, and continuous monitoring for shaft vibration. The maximum allowable rotating speed in terms of the strength of the flywheel is sufficiently higher than the maximum rotating speed of the motor postulated at the plant, and the soundness of the flywheel is maintained.

3.5.1.2.2.2 Missiles Considered Credible

Based on justification of non-credible missiles discussed in Subsection 3.5.1.2, non safety-related rotating equipment and pressurized components located in high-energy systems not required to satisfy ASME Code, Section III (Reference 3.5-3) are the only missiles considered credible that may require further protection for safety-related SSCs.

3.5.1.2.2.3 Credible Sources of Internally Generated Missiles (Inside Containment)

The following credible sources of internally generated missiles inside the PCCV are discussed below:

1. Items containing high-energy fluids

   All high-energy piping systems within PCCV comply with ASME Code, Section III (Reference 3.5-3).

2. High-speed rotating equipment

   The few non safety-related high-speed rotating equipment located inside PCCV are credible sources of missiles; however, do not pose a risk to safety-related SSCs. Primary missile protection is provided by locating credible missile sources behind concrete walls and floors, and/or locating SSCs outside the zones of postulated missile strikes. For those cases where elimination of missile hazard is impractical, credible missiles are evaluated based on the size, energy, and trajectory of the postulated missile, and the proximity to any potentially impacted SSCs. Alternately, an evaluation is performed to determine if sufficient redundancy remains to achieve and maintain a safe-shutdown condition. If the

ability to achieve and maintain safe shutdown is not determined, missile barriers are designed in accordance with Section 3.5.3.

3.5.1.3 Turbine Missiles

The two broad categories of turbine failures are referred to as design over-speed and destructive over-speed failures. Missiles resulting from design over-speed failures are the result of brittle fracture of turbine blade wheels or portions of the turbine rotor itself. Failures of this type can occur during startup or normal operation. Missiles resulting from destructive over-speed failures would be generated if the over-speed protection system malfunctions and the turbine speed increases to a point at which the low-pressure wheels or rotor undergo ductile failure.

3.5.1.3.1 Geometry

As defined by "Protection Against Low-Trajectory Turbine Missiles", RG 1.115, Rev. 1 (Reference 3.5-6), current evidence suggests low trajectory turbine missile strikes are concentrated within an area bounded by lines inclined at 25 degrees to the turbine wheel planes and passing through the end wheels of the low pressure stages.

The T/G is located south of the nuclear island with its shaft oriented along the north-south axis. In this orientation, the potential for low trajectory turbine missiles to impact safety-related SSCs within the same unit is minimized since safety-related SSCs are located outside the high-velocity, low-trajectory missile strike zone. T/G and associated equipment with respect to essential safety-related SSCs are shown in figures found in Section 1.2.

The COL Applicant is responsible to assess the orientation of the T/G of this and other unit(s) at multi-unit site for the probability of missile generation using the evaluation of Subsection 3.5.1.3.2.

3.5.1.3.2 Evaluation

Protection against damage from turbine missiles to safety-related SSCs is provided by the orientation of the T/G, by the robust turbine rotors, and by the redundant and fail-safe turbine design control system as described in Section 10.2. The rotor design, material selection, preservice and inservice programs and redundant control system support a very low probability of turbine missile generation. The turbine rotor design is discussed in Subsection 10.2.3, in which material selection, fracture toughness/fracture analysis is discussed. Description of the inservice inspection and testing program that will be used to maintain an acceptably low probability of missile generation is also given in Subsection 10.2.3.

The probability of unacceptable damage resulting from turbine missiles, P_4, is expressed as the product of (a) the probability of turbine failure resulting in the ejection of turbine rotor (or internal structure) fragments through the turbine casing, P_1; (b) the probability of ejected missiles perforating intervening barriers and striking safety-related SSCs, P_2; and (c) the probability of struck SSCs failing to perform their safety function, P_3.

Mathematically, $P_4 = P_1 \times P_2 \times P_3$ where RG 1.115 (Reference 3.5-6) considers an acceptable risk rate for P_4 as less than 10^{-7} per year. For favorably oriented T/Gs as

outlined in the geometry Section 3.5.1.3, the product of P_2 and P_3 is conservatively estimated as 10^{-3} per year. The determination of P_1 (probability of turbine failure resulting in the ejection of turbine rotor (or internal structure) fragments through the turbine casing) is strongly influenced by the program for periodic inservice testing and inspection. Criteria as described in NUREG-0800 Standard Review Plan 3.5.1.3, Table 3.5.1.3-1 (Reference 3.5-7) correlates P_1 to operating cases necessary to obtain P_4 in an acceptable risk rate of 10^{-7} per year, where P_1 is less than $P_4 / (P_2 \times P_3)$ or 10^{-4}. The P_1 applicable to the US-APWR is described in Subsection 10.2.2. The COL Applicant is to commit to actions to maintain P_1 within this acceptable limit as provided by turbine and rotor design features, material specifications and recommended inspections during preservice and inservice periods based on Technical Report, MUAP-070028-NP, Probability of Missile Generation From Low Pressure Turbines (Reference 3.5-17). Inservice inspection programs are to be maintained as outlined in SRP 3.5.1.3, Section II, Acceptance Criteria, Section 5 (Reference 3.5-7) for turbine installations without NRC-approved reports describing methods and procedures for calculating turbine missile generation probabilities.

3.5.1.4 Missiles Generated by Tornadoes and Extreme Winds

The US-APWR design basis spectrum of tornado missiles conforms to the spectrum of missiles defined in Table 2 of “Design-Basis Tornado and Tornado Missiles for Nuclear Power Plants”, RG 1.76, Rev.1 (Reference 3.5-8) for a region I tornado, the most severe. The spectrum of missiles is chosen to represent: (1) a massive high-kinetic-energy missile that deforms on impact, (2) a rigid missile that tests penetration resistance, and (3) a small rigid missile of a size sufficient to pass through any opening in protective barriers.

Therefore, the spectrum of tornado missiles is as follows:

- A 4,000 pound automobile, 16.4 ft by 6.6 ft by 4.3 ft, impacting the structure at normal incidence with a horizontal velocity of 135 ft/s or a vertical velocity of 90.5 ft/s. This missile is considered to potentially impact at all plant elevations up to 30 ft above grade for all grades within 0.5 mile of the plant structures.
- A 6.625 inch diameter by 15 ft long schedule 40 pipe, weighing 287 pounds, impacting the structure end-on at normal incidence with a horizontal velocity of 135 ft/s or a vertical velocity of 90.5 ft/s.
- A 1 inch diameter solid steel sphere assumed to impinge upon barrier openings in the most damaging direction with a velocity of 26 ft/s in any direction.

Because of the higher wind speed and the resulting higher kinetic energy, the design for wind-generated missiles is governed by tornado missiles and not hurricane missiles. Therefore, US-APWR seismic category I and II structures are not designed for hurricane missiles, because the design for tornado missiles envelopes the design for hurricane missiles.

Openings through the exterior walls of the seismic category I structures, and the location of equipment in the vicinity of such openings, are arranged so that a missile passing through the opening would not prevent the safe shutdown of the plant. Otherwise, structural barriers are designed to resist tornado missiles in accordance with the design procedures discussed in Subsection 3.5.3. Tornado missiles are not postulated to

ricochet or strike more than once at a target location. Tornado missile protection is provided to resist the normal component of force delivered by the missile striking in any direction.

3.5.1.5 Site Proximity Missiles (Except Aircraft)

Externally initiated missiles considered for the US-APWR standard design are based on tornado missiles as described in Subsection 3.5.1.4. As described in DCD, Section 2.2, the COL Applicant is to establish the presence of potential hazards, except aircraft, which is reviewed in Subsection 3.5.1.6, and the effects of potential accidents in the vicinity of the site. The RG followed is identified, and any deviations from this guidance or any alternative methods that are used are explained or justified. The information also describes the data collected, analyses performed, results obtained, and any previous analyses and results cited to justify any of the conclusions. Additional analyses may be required to evaluate other potential site-specific missiles.

3.5.1.6 Aircraft Hazards

The US-APWR standard plant design basis is that the plant is located such that an aircraft crash and air transportation accidents are not required to be considered as part of the design basis. It is the responsibility of the COL Applicant to verify the site interface parameters with respect to aircraft crashes and air transportation accidents as described in Section 2.2. Additional analyses may be required to evaluate potential aircraft missiles.

3.5.2 Structures, Systems, and Components to be Protected from Externally Generated Missiles

Safety-related SSCs are identified in Section 3.2 and Section 3.11. Protection of these systems from external missiles is provided by the external walls and roof of the safety-related R/B and PS/B. The external walls and roofs are reinforced concrete. The structural design requirements for the R/B and PS/B are outlined in Subsection 3.8.4.

Openings through exterior walls are evaluated on a case-by-case basis to provide confidence that a missile passing through the opening would not prevent safe shutdown and would not result in an offsite release exceeding the limits defined in 10 CFR 100 (Reference 3.5-2). The COL Applicant is responsible to evaluate site-specific hazards for external events that may produce missiles more energetic than tornado missiles, and assure that the design of seismic category I and II structures meet these loads.

3.5.3 Barrier Design Procedures

If required, components, protective shields, and missile barriers are designed to prevent damage to safety-related components by absorbing and withstanding missile impact loads. The target SSCs, shields, and barriers are evaluated for both local effects and overall structural effects due to missile impacts. The local effects in the impacted area are evaluated to predict the minimum thickness required for steel structures and for concrete structures to prevent perforation and the potential generation of secondary missiles by spalling or scabbing effects. A review of the structure for overall response is conducted to estimate forces, moments and shears induced in the barrier by the impact force of the missile.

3.5.3.1 Evaluation of Local Structural Effects

The following subsections address the design of structures to withstand and absorb missile impact loads. Formulas are provided to predict the penetration depth (x), scabbing thickness (t_s) and perforation thickness (t_p) potential created by the missile impact. Safety factors are then applied to determine required barrier thicknesses to restrict missile penetration, scabbing and/or perforation. It is assumed that the missile impacts normal to the plane of the wall on a minimum impact area and, in the case of reinforced concrete, its resistance does not credit capacity of struck reinforcing.

3.5.3.1.1 Concrete

The National Defense Research Council (NDRC) provides "A Review of Procedures for the Analysis and Design of Concrete Structures to Resist Missile Impact Effects", by R. P. Kennedy (Reference 3.5-9). Selected wall thicknesses also satisfy minimum barrier thicknesses provided in Table 1 of NUREG-0800, SRP 3.5.3 (Reference 3.5-10) to prevent local damage against tornado generated missiles.

Modified NDRC Formula

$$x = [4\,KNWd\,(V/1000d)^{1.8}]^{0.5} \quad \text{for } x/d \le 2.0$$

$$x = KNW\,(V/1000d)^{1.8} + d \quad \text{for } x/d > 2.0$$

where

x	=	penetration depth, inches
W	=	missile weight, pounds
d	=	missile diameter, inches
N	=	missile shape factor = 1.0
V	=	impact velocity, ft/s
K	=	experimentally obtained material coefficient for penetration = $180/(f_c')^{0.5}$
f_c'	=	concrete compressive strength

Scabbing thickness, t_s, and perforation thickness, t_p is given by

$$t_s / d = 2.12 + 1.36\,x / d \quad \text{for } 0.65 \le x / d \le 11.75$$

$$t_s / d = 7.91\,(x / d) - 5.06\,(x / d)^2 \quad \text{for } x / d \le 0.65$$

$$t_p / d = 1.32 + 1.24\,(x / d) \quad \text{for } 1.35 \le x / d \le 13.5$$

$$t_p / d = 3.19\,(x / d) - 0.718\,(x / d)^2 \quad \text{for } x / d \ge 13.5$$

In order to provide a sufficient safety margin, the design thickness (t_d) is 20% greater than the threshold value for the phenomenon being prevented as follows:

To prevent perforation, the design thickness, $t_d = 1.2\,t_p$

To prevent scabbing, the design thickness, $t_d = 1.2\,t_s$

3.5.3.1.2 Steel

The results of tests by Stanford Research Institute summarized in "US Reactor Containment Technology" (Reference 3.5-11) are used to establish equations (Stanford Formula) to determine required plate thickness. Alternately, formulas by the Ballistic Research Laboratory (BRL Formula) available in "Reactor Safeguards" (Reference 3.5-12) are utilized and provide comparable results to the US Reactor Containment Technology method.

Stanford Formula

$$E / D = (S / 46{,}500) [16{,}000\ T^2 + 1{,}500 (W / W_s) T]$$

where:

E = critical kinetic energy required for perforation, foot pounds

D = effective missile diameter, inches

S = ultimate tensile strength of the target (steel plate), pounds per square inch

T = target plate thickness, inches

W = length of a square side between rigid supports, inches

W_s = length of a standard window, 4 inches

The ultimate tensile strength is directly reduced by the amount of bilateral tension stress already in the target. The equation is valid within the following ranges:

$0.1 < T/D < 0.8$

$0.002 < T/L < 0.05$

$10 < L/D < 50$

$5 < W/D < 8$

$8 < W/T < 100$

$70 < V < 400$

BRL Formula

$$T_p = (E_k)^{2/3} / (672\ D)$$

where

T_p = steel plate thickness for threshold of perforation, inches

D = equivalent missile diameter, inches

E_k = missile kinetic energy, foot pounds = $M\ V^2/2$

M = mass of the missile, lb-sec^2/ft

V = impact velocity, ft/s

For the design of steel targets, the minimum design thickness (t_d) is given below where the perforation thickness, T, is obtained from the Stanford Formula or BRL Formula as follows:

$$t_d = 1.25\ T$$

3.5.3.1.3 Composite (Modular) Sections

Composite or multi-element barriers consider the residual velocity of the missile perforating the first element as the striking velocity for the next element. For steel-concrete modular sections, the outer steel plates satisfy minimum thicknesses as determined in Subsection 3.5.3.1. In cases of extreme missile impact, steel plate thicknesses may be limited and the residual velocity of the missiles is to be absorbed by concrete determined by equations presented in "Ballistic Perforation Dynamics" (Reference 3.5-13).

3.5.3.2 Evaluation of Overall Structural Effects

Elements required to remain elastic are evaluated to assure that the usable strength capacity exceeds the demand. For structures allowed to displace beyond yield (elasto-plastic response), an evaluation confirms that acceptable deformation limits to demonstrate ductile behavior are not exceeded by comparing computed demand ductility ratios with capacity values.

After it is determined that a missile will not penetrate the barrier, an equivalent static load concentrated at the impact area is applied in conjunction with other design loads. Refer to Subsection 3.3.2.2 for determination of tornado forces on structures, including equivalent static loads for tornado missile impact. In determining an appropriate equivalent static load for other missiles sources (as defined in Subsection 3.8.4), elasto-plastic behavior may be assumed with permissible ductility ratios as long as deflections will not result in loss of function of any safety-related system.

The flexural, shear, and buckling effects on structural members are determined using the equivalent static load obtained from the evaluation of missile impact on structural response. Stress and strain limits for the equivalent static load comply with "Safety-Related Concrete Structures for Nuclear Power Plants (Other than Reactor Vessels and Containments)", RG 1.142, Rev.2 (Reference 3.5-14), and "Specification for the Design, Fabrication and Erection of Steel Safety-Related Structures for Nuclear Facilities", including Supplement 2 (2004) American Institute of Steel Construction (AISC) N690-1994 & 2004. (Reference 3.5-15). The consequences of scabbing are evaluated if the thickness is less than the minimum thickness to preclude scabbing.

The overall qualification of concrete barriers is discussed in RG 1.142 (Reference 3.5-14). Regulatory position 10 of RG 1.142 accepts evaluations completed in accordance with Appendix C of American Concrete Institute (ACI) Code ACI-349 (Reference 3.5-16), with provisions made for maximum permissible ductility ratios (μ) and dynamic increase factor (DIF) as stated in the RG 1.142:

1. In ACI-349, Section C.3.5, where flexure controls design, μ = 1.0 for the structure as a whole, except as noted in conjunction with Section C3.8 below, and μ = 3.0 for a localized area in the structure.

2. In ACI-349, Section C.3.7, where shear controls design, μ = 1.0 when shear is carried by concrete alone, and μ = 1.3 when shear is carried by a combination of concrete and stirrups or bent bars.

3. In ACI-349, Section C.3.8, where impulsive or impactive loads product flexure in a member carrying axial compression loads, μ = 1.0 in flexure when the compressive load is greater than 0.1 $f'_c A_g$ (where A_g is the gross area of section, in.^{2}) or one-third of that which would produce balanced conditions, whichever is smaller, or

   μ is as given in Sections C.3.3 or C.3.4 of ACI-349, when the compression load is less than 0.1 $f'_c A_g$ or one-third of that which would produce balanced conditions, whichever is smaller, or

   μ varies linearly from 1.0 to that given in Sections C.3.3 or C.3.4 of ACI-349 for conditions between those specified above.

4. In ACI-349 Section C.2.1, the *DIF* is 1.0 for all materials when the dynamic load factor associated with the impactive or impulsive loading is less than 1.2.

For steel, maximum allowable ductility ratios are provided by AISC N690 including Supplement 2 (Reference 3.5-15).

3.5.4 Combined License Information

COL 3.5(1) The COL Applicant is to prepare plant procedures that specify equipment required for maintenance or undergoing maintenance is to be removed from containment prior to operation, moved to a location where it is not a potential hazard to SSCs important to safety, or seismically restrained to prevent it from becoming a missile.

COL 3.5(2) The COL Applicant is to commit to actions to maintain P_1 within this acceptable limit as provided by turbine and rotor design features, material specifications and recommended inspections during preservice and inservice periods based on Technical Report, MUAP-070028-NP, Probability of Missile Generation From Low Pressure Turbines.

COL 3.5(3) As described in DCD, Section 2.2, the COL Applicant is to establish the presence of potential hazards, except aircraft, which is reviewed in Subsection 3.5.1.6, and the effects of potential accidents in the vicinity of the site.

COL 3.5(4) It is the responsibility of the COL Applicant to verify the site interface parameters with respect to aircraft crashes and air transportation accidents as described in Section 2.2.

COL 3.5(5) The COL Applicant is responsible to evaluate site-specific hazards for external events that may produce missiles more energetic than tornado missiles, and assure that the design of seismic category I and II structures meet these loads.

COL 3.5(6) The COL Applicant is responsible to assess the orientation of the T/G of

this and other unit(s) at multi-unit site for the probability of missile generation using the evaluation of Subsection 3.5.1.3.2.

3.5.5 References

3.5-1 Domestic Licensing of Production and Utilization Facilities. Title 10 Code of Federal Regulations Part 50, U.S. Nuclear Regulatory Commission, Washington, DC.

3.5-2 Reactor Site Criteria. Title 10 Code of Federal Regulations Part 100, U.S. Nuclear Regulatory Commission, Washington, DC.

3.5-3 Rules for Construction of Nuclear Facility Components, American Society of Mechanical Engineers (ASME) Boiler & Pressure Vessel Code Section III, 2001 Edition through the 2003 Addenda.

3.5-4 Rules for Construction of Nuclear Facility Components, American Society of Mechanical Engineers (ASME) Boiler & Pressure Vessel Code Section XI, 2001 Edition through the 2003 Addenda.

3.5-5 Rules for Construction of Overhead and Gantry Cranes (Top Running Bridge, Multiple Girder), ASME NOG-1, 2004.

3.5-6 Protection Against Low-Trajectory Turbine Missiles. Regulatory Guide 1.115, Rev. 1, U.S. Nuclear Regulatory Commission, Washington, DC, July 1977.

3.5-7 Turbine Missiles, Standard Review Plan for the Review of Safety Analysis Reports for Nuclear Power Plants, NUREG-0800, Standard Review Plan, Section 3.5.1.3, Rev. 3, U.S. Nuclear Regulatory Commission, Washington, DC, March 2007.

3.5-8 Design-Basis Tornado and Tornado Missiles for Nuclear Power Plants. Regulatory Guide 1.76, Rev. 1, U.S. Nuclear Regulatory Commission, Washington, DC, March 2007.

3.5-9 A Review of Procedures for the Analysis and Design of Concrete Structures to Resist Missile Impact Effects, R. P. Kennedy, Nuclear Engineering and Design, Volume 37, Number 2, pp 183-202, 1976.

3.5-10 Barrier Design Procedures, Standard Review Plan for the Review of Safety Analysis Reports for Nuclear Power Plants, NUREG-0800, Standard Review Plan, Section 3.5.3, Rev. 3, U.S. Nuclear Regulatory Commission, Washington, DC, March 2007.

3.5-11 U.S. Reactor Containment Technology, W.B. Cottrell and A.W. Savolainen, NSIC-5, Oak Ridge National Laboratories, Volume 1, Chapter 6, 1965.

3.5-12 Reactor Safeguards, C. R. Russell, MacMillan Publishers, New York, 1962.

3.5-13 Ballistic Perforation Dynamics, R. F. Recht and T. W. Ipson, ASME Journal of Applied Mechanics, Volume 30, Series E, Number 3, September 1963.

3.5-14 Safety-Related Concrete Structures for Nuclear Power Plants (Other than Reactor Vessels and Containments), Regulatory Guide 1.142, Rev. 2, U.S. Nuclear Regulatory Commission, Washington, DC, November 2001.

3.5-15 Specification for the Design, Fabrication and Erection of Steel Safety-Related Structures for Nuclear Facilities, including Supplement 2 (2004), ANSI/AISC N690-1994, American National Standards Institute/American Institute of Steel Construction, 1994 & 2004.

3.5-16 Code Requirements for Nuclear Safety-Related Concrete Structures, American Concrete Institute (ACI) 349, 1997.

3.5-17 Probability of Missile Generation From Low Pressure Turbines, MUAP-070028-NP (R0), Mitsubishi Heavy Industries, Ltd., Tokyo, Japan, December 2007.

3.6 Protection Against Dynamic Effects Associated with Postulated Rupture of Piping

Appendix A of 10 CFR 50, GDC 4 (Reference 3.6-1), requires that structures, systems, and components (SSCs) be designed to accommodate the effects of and to be compatible with the environmental conditions associated with the normal operation, maintenance, testing, and postulated accidents, including the LOCA. This section deals with the protection against the dynamic effects of postulated pipe break accidents, specifically in the localized regions of the pipe break, including pipe whip, jet impingement, subcompartment pressurization, and fluid system decompression in the ruptured pipe. In addition, the environmental effects, spray wetting, and flooding are also addressed in this section.

The criteria used to evaluate pipe failure protection are generally consistent with the NRC guidelines including those in NUREG-0800, SRP 3.6.1, 3.6.2, and 3.6.3 (References 3.6-2, 3.6-3, and 3.6-4), and applicable Branch Technical Position (BTP) 3-4 and BTP 3-3 (References 3.6-5 and 3.6-6).

In the event of a postulated pipe failure within the plant, adequate protection is provided so that the adverse effects of the failure do not impact safety-related SSCs or equipment. Safety-related systems and components are those required to shutdown the reactor and mitigate the consequences of the postulated piping failure.

The general plant protection criteria inside and outside of the PCCV to mitigate the postulated piping failure in fluid systems are defined in Subsection 3.6.1. Subsection 3.6.1 provides design bases and addresses criteria for evaluation of essential systems.

Subsection 3.6.2 defines the different types of piping failures (circumferential pipe break, longitudinal pipe break, or leakage crack) to be considered based on the energy level of the fluid system. Additionally, Subsection 3.6.2 provides criteria for determining postulated break and crack locations, including the criteria for excluding piping failures in certain portions of the piping systems. The analytical methods to evaluate forcing function, and determine and evaluate acceptability of resulting pipe responses including jet impingement, pipe motion, and restraint loads, and operability are addressed.

Subsection 3.6.3 describes the application of LBB methodology, which allows elimination of postulated pipe breaks in certain piping systems based on the system characteristics and failure mechanics-based crack growth in conjunction with leak detection capability.

3.6.1 Plant Design for Protection against Postulated Piping Failure in Fluid Systems Inside and Outside Containment

In accordance with NUREG-0800, SRP 3.6.1 (Reference 3.6-2), the plant is designed to provide protection against piping failure inside or outside the PCCV to assure that such failures would not compromise the functional capability of safety-related systems to bring the plant to a safe-shutdown condition and maintain it in that condition in the event of such failure. In order to maintain the safety of the plant when a pipe break is postulated, the following items are considered in the design of the plant including the arrangement and pipe design.

Required plant conditions following a pipe break:

- The functions of the engineered safety features and related measures required in cooling the core are not impaired.
- The reactor shutdown system[1] and its components maintain their function.
- Containment integrity is maintained.
- Radiological doses resulting from a postulated piping failure remain below the limits of 10 CFR 100 (Reference 3.6-7).
- MCR functions and habitability are maintained.

The SSCs, required to be protected from postulated piping failure in fluid systems inside and outside PCCV, are discussed in this section. Additional information is provided in Sections 3.2 and 3.11 of this chapter.

Safety-related SSCs are protected from postulated piping failure in fluid systems inside and outside PCCV. The US-APWR design includes the following design measures:

- Separation of redundant trains of safety-related SSCs addressed in Chapter 1.
- Protective barriers, restraints, and enclosures, where necessary, addressed in this section.
- Placement of essential SSCs in segregated areas, which are not subject to the effects of postulated piping failure.
- Environmental evaluation of safety-related SSCs subject to the effects of postulated piping failure addressed in Section 3.11.
- Evaluation of structural features subject to the effects of postulated piping failure addressed in Section 3.8.

3.6.1.1 Design Basis

Essential systems are evaluated for conformance to the following design bases and susceptibility to pipe failure effects.

A. The selection of the failure type is based on whether the system is high or moderate-energy during normal operating conditions of the system as defined in item B, below. High-energy fluid systems are defined to be those systems or portion of systems that, during normal plant conditions, are either in operation or are maintained pressurized under conditions where either or both of the following are met:

   a. Maximum operating temperature exceeds 200°F

   b. Maximum operating pressure exceeds 275 psig

[1]The reactor shutdown system is designed to be equipped with the function to shift to low-temperature shutdown from high-temperature shutdown and maintains the shutdown condition by inserting negative reactivity into reactor from output operating condition to assure the reactor in less than critical.

Moderate-energy fluid systems are defined to be those systems or portion of systems that, during normal plant conditions are either in operation or maintained pressurized (above atmospheric pressure) under conditions where both of the following are met:

a. Maximum operating temperature is 200°F or less.

b. Maximum operating pressure is 275 psig or less.

Piping systems are classified as moderate-energy systems when they operate as high-energy piping for only short periods in performing their system function but, for the major portion of their operational period, qualify as moderate–energy fluid systems. An operational period is considered short if the total fraction of time that the system operates within the pressure-temperature conditions specified for high-energy fluid systems is less than 2% of the total time that the system operates as a moderate-energy fluid system.

Table 3.6-1 identifies systems which contain high- and moderate-energy lines.

B. The pressure-temperature condition in the fluid when the postulated piping failure occurs determines the magnitudes of the fluid reaction forces. The technical basis used to determine the state of the fluid is as follows:

1. For piping sections that are operating at a pressure greater than atmosphere, the thermodynamic state is assumed to be the one associated with normal full power operation.

2. For the piping sections that are pressurized during normal plant operating modes other than the design power generation, such as during hot standby, start up, shut down, and refueling, the thermodynamic state is assumed as operating mode that gives the worst fluid reaction forces. For high energy lines as defined in item A above, if the piping sections are pressurized to the high energy level only for 2% of the total operating time, such piping sections are considered as moderate energy and not evaluated for high energy pipe failure.

3. High-stress-based postulated pipe rupture locations are determined based on calculated stresses due to Level A service loading (normal loads) and Level B service loading (normal plus operational transients) without contribution of seismic loads since operating basis earthquake is eliminated from the explicit design considerations. However, postulated pipe rupture locations based on fatigue effects will include seismic cyclic effects.

C. For longitudinal and circumferential pipe breaks, evaluations are performed for dynamic effects, such as pipe whip, jet impingement, and subcompartment pressurization, as well as those of environmental conditions, flooding, and spray wetting. For leakage cracks, evaluations for environmental condition, flooding and spray wetting are performed. Additionally, when LBB criteria are successfully applied, evaluation of dynamic effects is not required.

D. Circumferential and longitudinal breaks of the main steam and feedwater lines are not postulated in the break exclusion zones. However, the effects of flooding, spray wetting, and subcompartment pressurization are evaluated for a postulated 1.0 sq. ft. break for the main steam and feedwater lines at a location that has the greatest effect on essential equipment.

E. Each postulated piping failure event (pipe break or crack) is considered as a single initial event during normal plant operation. For systems not analyzed for seismic considerations, it is assumed that a SSE event will cause pressure boundary failure at any location.

F. Offsite power is assumed to be unavailable if a trip of the turbine-generator system or reactor protection system is a direct consequence of the postulated piping failure. Also, offsite power is assumed unavailable during and following seismic events.

G. A single active component failure is assumed in systems used to mitigate consequences of the postulated piping failure and to shut down the reactor, except as noted in item H below. The single active component failure is assumed to occur in addition to the postulated piping failure and any direct consequences of the piping failure, such as unit trip and loss of offsite power.

H. Where the postulated piping failure is assumed to occur in one of two or more redundant trains of a dual-purpose moderate-energy essential system (e.g., one required to operate during normal plant conditions as well as to shut down the reactor and mitigate the consequences of the postulated piping failure), single active failures of components in the other train or trains of that system or other systems necessary to mitigate the consequences of the piping failure and shut down the reactor need not be assumed, provided the systems are designed to seismic Category I standards, are powered from both offsite and onsite sources, and are constructed, operated, and inspected to quality assurance, testing, and ISI standards appropriate for nuclear safety systems.

I. All available systems, including those actuated by operator actions, may be employed to mitigate the consequences of a postulated piping failure. In judging the availability of systems, consideration of the postulated failure and its direct consequences, such as unit trip and loss of offsite power, are assumed together with an assumed single active component failure and its direct consequences. The feasibility of carrying out operator actions is judged on the basis of ample time and adequate access to equipment being available for the proposed actions. For breaks in non-seismic piping systems, only seismically-qualified systems are assumed to be available to mitigate the consequences of the failure since a seismic event may have caused the pipe break.

J. Rapid motion of the pipe whip resulting from postulated pipe break is assumed to occur in the plane determined by the piping geometry. The direction of the movement is in the direction of jet reaction force.

   If a thrust force causes a whipping pipe to impact a flat surface normal to its direction of travel, the direction of the initial pipe movement is assumed to rest against that surface, without any pipe whip in other directions.

Pipe whip restraints are provided when the whipping pipe could impair the capability of any essential system or component to perform its intended function. Pipe whip restraints are located within the length of location of plastic hinge formation when permissible. If it is not possible to locate the whip restraint within the length of plastic hinge, the consequences of pipe whipping and jet impingement effect are further investigated.

K. The pipe break reaction force and jet impingement force calculation considers the fluid internal energy considering any line restrictions (that is, flow limiter) between the pressure source and break location and the absence of energy reservoirs, as applicable.

L. Jet loads resulting from postulated pipe break in a high pressure steam system (pressure greater than 870 psia) or sub-cooled water which would flash at the break, are evaluated as follows:

1. Any directly impacted component within 10 pipe diameters is assumed to fail, unless the components is required for safe shutdown and accident mitigation capability in which case the jet loads are computed and evaluated based on the criteria given in Subsection 3.6.2.3.

2. Based on NUREG CR-2913 (Reference 3.6-8), components beyond 10 pipe diameter range are considered as un-damaged and functional.

M. By definition, a non-essential system is not required for safe shutdown of the nuclear plant following a postulated pipe rupture accident scenario and as such, it is not required to be evaluated for pipe rupture protection. However, if a non-essential system or a portion of it, which is affected by a specific piping failure event that could potentially affect an essential system or component, then it is evaluated for pipe rupture protection per the rules of this section.

N. The environmental effects of a postulated piping failure do not preclude habitability of the MCR or access to surrounding areas important to the safe control of reactor operations needed to cope with the consequences of the piping failure.

The capability of all essential components to perform their intended safety functions is maintained.

3.6.1.2 Safety Evaluation

3.6.1.2.1 General

Safety evaluations assess safety-related systems and components for the adequacy of their intended protective actions and measures in the event of postulated pipe failures, including those required to mitigate the consequences of the failure. Protective measures include separation, barriers, and restraints as discussed below.

3.6.1.2.2 Basic Protection Measures

3.6.1.2.2.1 Separation

Separation by distance, compartments or enclosures is used as much as practicable to protect redundant safety-related systems and trains. Deliberate separation protects against the dynamic effects of postulated pipe failures of the systems and components. Redundant safety systems and components are arranged to prevent the loss of the safety function as a result of a postulated pipe failure.

A multi-step process is used to develop the placement of safety-related systems and components which consider the following means for separation.

- Wherever practical, locate safety-related systems away from high-energy piping
- Locate redundant safety systems in separate compartments
- If necessary, enclose specific components required to function as a result of a postulated pipe failure
- Design drainage routing and flood control to maintain adequate separation from equipment required to function as a result of a postulated pipe failure

Each of the four safety trains are separated into four quadrants around the outside of the PCCV. Each train is isolated by physical barriers as well as isolating the radiological control area from the non-radiological control area of the R/B. The concrete walls are designed to prevent events on one safety train from impacting another train. The segregation also includes segregation of fluid containing SSCs of a train from the electrical SSCs of the same train to the extent practical. In general, cable trays are routed at higher elevations than piping. Chases are provided between the cable trays and piping to maintain the electrical/mechanical separation if required. Physically, individual train equipment within the four quadrants is located to provide the maximum separation between the same equipment of the other three trains within the confines of the R/B footprint. This separation minimizes the probability of an event affecting more than one of the safety trains at a given time. Where components must cross between isolating barriers, the penetrations are located above flood levels to the extent possible. In addition, penetration seals maintain compartment to compartment separation.

3.6.1.2.2.2 Barriers and Shields

Where physical separation is not sufficent to protect safety-related systems and components from postulated pipe failures, structural elements such as walls, floors, columns, and foundations are designed to serve as protective barriers and shields whenever possible. Other barriers, deflectors or shields are provided where additional protection is required. The barriers are designed to withstand loading generated by postulated jet forces and pipe whip impact forces. Refer to Subsection 3.6.2.4 for additional discussion on the design of barriers, deflectors and shields.

Portions of the containment internal structure provide a series of protective barriers. The reactor coolant loops (RCLs) are shielded from the containment liner by the secondary shield wall. Redundancy of each loop of the reactor coolant system is also maintained by barriers formed by the secondary shield wall, refueling cavity walls, and operating deck.

The combination of physical separation and robust barriers also protects the steam and feedwater lines against possible adverse interactions with the RCL.

3.6.1.2.2.3 Piping Restraints

Piping restraints are provided for postulated pipe ruptures where unrestrained movement of either end of the ruptured pipe could adversely impact SSCs, which are required to mitigate the effects of the pipe failure. Refer to Subsection 3.6.2.4 for methods of analysis of pipe whip restraints.

3.6.1.2.3 Specific Protection Measures

3.6.1.2.3.1 Subcompartment Pressurization

Analyses of postulated pipe breaks of high-energy piping is performed to determine the subcompartment's pressurization response. Locations of postulated pipe breaks are determined in accordance with Subsection 3.6.2.1.

High-energy piping and piping evaluated for LBB requirements of Subsection 3.6.3 are identified in Appendix 3E. The subcompartments inside the PCCV are designed to accommodate the pressurization loads from the breaks in lines that are not qualified for LBB. Pressurization loads on compartments inside the PCCV enclosing high-energy piping are designed as described in Subsection 3.8.4.3.

The CVCS makeup piping is classified as high-energy due to its design pressure, but does not cause pressurization because it operates at ambient temperature.

The reactor vessel (RV) annulus (volume between the RV and biological shield wall below elevation 46 ft, 11 in.) is evaluated for asymmetric compartment pressurization, and the RV is evaluated for asymmetric pressurization. These pressures are assumed to develop based on a postulated pipe break in the largest RCS line that is not qualified for LBB.

The potential for pressurization from high-energy lines in the R/B is limited, and the localized effects are considered where applicable. The pressurization loads for the elevation 65'-0" PCCV penetration room containing the break exclusion zone are based on an assumed non-mechanistic longitudinal break with a one square foot break from either main steam or feedwater line.

3.6.1.2.3.2 MCR Habitability

MCR habitability is evaluated for adverse effects resulting from postulated pipe breaks and cracks within the R/B. Section 6.4 discusses MCR habitability, including the provision of a remote shutdown workstation. The remote shutdown workstation is not subject to postulated pipe ruptures.

There are no high-energy lines near the MCR. The closest high-energy lines to the MCR are in the main steam pipe room and are part of the break exclusion areas. The MCR is separated from the isolation valve compartment by two structural floors. The area between the two floors is used for heating, ventilation, and air conditioning components associated with the MCR. The floors separating the HVAC compartment room from the

main steam isolation valve compartment are thick, reinforced concrete floors. Refer to Subsection 3.6.2.1 for discussion applicable to PCCV penetrations in the main steam pipe room.

The main steam pipe room is evaluated using criteria for the evaluation of a one square foot longitudinal break in a break exclusion area. This location is evaluated for the effects of flooding, spray wetting, and subcompartment pressurization resulting from a postulated one square foot break of either a main steam or feedwater line. The MCR is not affected by any of the effects of a postulated break of this piping.

3.6.1.2.3.3 PCCV Penetration of High Energy Lines

As discussed in Subsection 3.6.2.1, anchors or five-way restraints (free in the axial direction) are installed at each PCCV penetration. The anchor/restraints are located as close as practical to the containment isolation valves inside and/or outside of the PCCV. This configuration maintains isolation valve operability and integrity of the PCCV penetration area during a postulated break.

3.6.1.3 Postulated Failures Associated with Site-Specific Piping

The COL Applicant is to identify the site-specific systems or components that are safety-related or required for safe shutdown that are located near high-energy or moderate-energy piping systems, and are susceptible to the consequences of these piping failures. The COL Applicant is to provide a list of site-specific high-energy and moderate-energy piping systems, which includes a description of the layout of all piping systems where physical arrangement of the piping systems provides the required protection, the design basis of structures and compartments used to protect nearby essential systems or components, or the arrangements to assure the operability of safety-related features where neither separation nor protective enclosures are practical. Additionally, the COL Applicant is to provide the failure modes and effect analyses that verifies the consequences of failures in site-specific high-energy and moderate-energy piping does not affect the ability to safely shut down the plant.

3.6.2 Determination of Rupture Locations and Dynamic Effects Associated with the Postulated Rupture of Piping

This section describes the design bases for locating postulated breaks and cracks in high- and moderate-energy piping systems inside and outside PCCV; the methods used to define the jet thrust reaction force at the break location; the procedures used to define jet impingement loading on adjacent safety-related systems or components; and the design criteria for pipe whip restraint, jet impingement barriers and shields and guard pipes. Dynamic effects such as pipe whip and jet impingement need not be evaluated in several high energy systems, including the RCL and surge line when LBB criteria successfully are applied (see Subsection 3.6.3).

The plant meets the relevant requirements of GDC 4 as follows:

(1) Criteria defining postulated pipe rupture locations and configurations inside and outside the PCCV are defined in Subsection 3.6.2.1 and are per BTP 3-4 (Reference 3.6-5).

(2) Protection against postulated pipe rupture outside the PCCV is provided per BTP 3-3 (Reference 3.6-6).

(3) Detailed acceptance criteria covering pipe-whip dynamic analysis, including the determination of the forcing functions of the jet thrust and the jet impingements are provided in Subsection 3.6.2.3 and per Section III of SRP 3.6.2 (Reference 3.6-3). The general bases and assumptions of the analysis are per BTP 3-4 (Reference 3.6-5).

3.6.2.1 Criteria used to Define Break and Crack Location and Configuration

The following subsections establish the criteria used for selecting the locations and configuration of the postulated breaks and cracks, except for piping that satisfies the requirements for LBB described in Subsection 3.6.3.

The COL Applicant is to implement the criteria of the following subsections for defining break and crack locations and configurations, and the locations and configurations of design basis pipe break and crack locations and configurations for site-specific high-energy and moderate-energy piping systems. The COL Applicant is to identify the postulated rupture orientation of each postulated break location for site-specific high-energy and moderate-energy piping systems. The COL Applicant is to implement the appropriate methods to assure that as-built configuration of site-specific high-energy and moderate-energy piping systems is consistent with the design intent and provide as-built drawings showing component locations and support locations and types that confirms this consistency.

3.6.2.1.1 High-Energy Fluid Systems Piping

3.6.2.1.1.1 High-Energy Fluid System Piping in PCCV Penetration Area

Breaks and cracks are not postulated in the portions of piping from the PCCV penetration to an anchor or five-way restraint. This portion of piping meets the following criteria.

All piping in the PCCV penetration area defined above is ASME Code, Section III, Class 2 (Reference 3.6-9). For ASME Code, Section III, Class 2 piping the following design criteria are met.

(1) The design criteria of the ASME Code, Section III (Reference 3.6-10), Subarticle NE-1120, is satisfied for the PCCV penetration.

(2) Stresses do not exceed those specified within Subsection 3.6.2.1.1.2.

(3) The maximum stress in this piping as calculated by Equation 9, of paragraph NC-3653 of ASME Code, Section III (Reference 3.6-9) does not exceed the smaller of 2.25 S_h or 1.8 S_y, when subjected to the combined loading of internal pressure, dead weight and postulated pipe rupture beyond this portion of piping.

(4) The number of circumferential and longitudinal piping welds and branch connections are minimized.

(5) Welded attachments, for pipe supports or other purposes, to this portion of piping are avoided. Where welded attachments are necessary, the welds are 100%

volumetrically examinable and detailed stress analyses are performed to demonstrate compliance with the limits of Subsection 3.6.2.1.1.2.

(6) 100% volumetric examination in accordance with IWA-2400 of ASME Code, Section XI (Reference 3.6-11) of all piping welds is performed.

(7) Anchors or five way restraints do not prevent the access required to conduct inservice examination specified in ASME Code, Section XI (Reference 3.6-11). ISI completed during each inspection interval provides examination of circumferential and longitudinal welds within the boundary of this portion of piping.

Application to Main Steam Pipe Room

No breaks are postulated in the main steam supply system (MSS) and feedwater system (FWS) piping from the PCCV penetration outboard weld to the wall of main steam pipe room (Figure 3.6-1) provided the following actions are taken:

- The pipe is routed straight to lower the stresses.
- Five–way restraint (free only in axial direction) is installed in the main steam pipe room wall penetration.
- Essential equipment is protected from the environmental, flooding, and subcompartment pressurization effects of an assumed non-mechanistic longitudinal break. Each assumed non-mechanistic break has a cross sectional area of one square foot and postulated to occur at a location that has the greatest effect on essential equipment.

3.6.2.1.1.2 Postulation of Pipe Breaks in Areas Other than PCCV Penetrations

The locations for postulated breaks in high-energy piping are dependent on the classification, quality group, and design standards used for the piping system. The break locations for high-energy piping are described in the following sections. These locations are postulated based on “as-designed” analyses using the design configuration. As a result of piping reanalysis, due to differences between the design configuration and the as-built configuration, the high stress and usage factor location may be shifted. The intermediate break (if any) locations need not be changed unless one of the following conditions exists:

a. The dynamic effects from the new (as-built) intermediate break locations are not mitigated by the original pipe whip restraint and jet shields.

b. There is significant change in pipe design parameters such as pipe size, wall thickness, or pressure rating.

ASME Code, Section III, Division 1 – Class 1 Piping

Pipe breaks are postulated to occur at the following locations in piping and branch runs designed and constructed to the requirements for Class 1 piping in the ASME Code, Section III (Reference 3.6-12).

- At terminal ends of the piping, including the following:

- The extremity of the piping connected to structures, components, or anchors that act as essentially rigid restraints to piping translation and rotational motion due to static or dynamic loading.
- Branch intersection points are considered a terminal end for the branch line unless the following are met: the branch and the main piping systems are modeled in the same static, dynamic, and thermal analyses, and shown to have significant effect on the main line behavior (that is, the branch line can not be decoupled from the main run [see Subsection 3.12.4.4]).
- In a piping run that is maintained pressurized during normal plant conditions for only a portion of the run, the terminal end, for the purpose of defining break locations, is the piping connection to the first normally closed valve.

- At the intermediate locations where the following conditions are satisfied:
  - Intermediate locations where the maximum stress range as calculated by Equation 10 of Paragraph NB-3653 of the ASME Code, Section III and either Equation 12 or Equation 13 of Paragraph NB-3653.6 of the ASME Code, Section III exceeds 2.4 S_m (where S_m is design stress intensity) (Reference 3.6-12).
  - Intermediate locations where the cumulative usage factor as determined by the ASME Code, exceeds 0.1.

ASME Code, Section III, Division 1 – Class 2 and Class 3 Piping

Pipe breaks are postulated to occur at the following locations in piping and branch runs designed and constructed to the requirements for Class 2 and 3 piping in the ASME Code, Section III, Division 1 (Reference 3.6-9).

- At terminal ends of the piping, using the same definition for terminal ends as for Class 1 pipe.
- At intermediate locations selected by one of the following criteria:
  - At each fitting (e.g., elbow, tee, cross, flange, and non-standard fitting), welded attachment, and valve.
  - At one location at each extreme of piping run adjacent to protective structure for piping that contains no fittings, welded attachments, or valves.
  - At each location where stresses calculated by the sum of Equation 9 and 10 in NC/ND-3653 of ASME Code, Section III, exceed 0.8 times the sum of the stress limits given in NC/ND-3653 (Reference 3.6-9).

Non-ASME Class Piping

Breaks in seismically analyzed non-ASME Class piping are postulated according to the same criteria as for ASME Class 2 and 3 piping above.

Separation and interaction requirements between seismically analyzed and non-seismically analyzed piping are met as described in Subsection 3.12.3.7.

3.6.2.1.1.3 Postulation of Leakage Cracks in Areas Other than PCCV Penetrations

Leakage cracks in high energy piping are postulated as follows:

- For ASME Code, Section III (Reference 3.6-12), Division 1, Class 1 piping, at axial locations where the calculated stress range by Equation 10 in NB-3653 exceeds 1.2 S_m.
- For ASME Code, Section III (Reference 3.6-9), Division 1, Class 2 and 3 piping, at axial locations where calculated stress by the sum of Equations 9 and 10 in NC/ND-3653 exceeds 0.4 times the sum of the stress limits given in NC/ND-3653.
- For seismically analyzed non-ASME Class piping at the locations defined in the same way as ASME Code, Section III (Reference 3.6-9), Class 3 piping.
- For non-ASME Class piping, which has not been evaluated to obtain stress information, leakage cracks are postulated at axial locations that produce the most severe environmental effects.

3.6.2.1.2 Moderate-Energy Fluid System Piping Break Locations

3.6.2.1.2.1 Moderate-Energy Fluid System Piping in PCCV Penetration Areas

Leakage cracks are not postulated in those portion of the piping from PCCV wall to and including the inboard and outboard isolation valves provided that the PCCV penetration meets the requirements of ASME Code, Section III (Reference 3.6-10), Subarticle NE-1120 and the piping is designed so that the maximum stress range based on the sum of Equations (9) and (10) in Subarticle NC/ND-3653 of the ASME Code, Section III (Reference 3.6-9) does not exceed 0.4 times the sum of the stress limits given in NC/ND-3653.

3.6.2.1.2.2 Moderate-Energy Fluid System Piping in Areas Other than PCCV Penetrations

Leakage cracks are postulated in the following piping systems located adjacent to SSCs required for safe shutdown.

- For ASME Code, Section III (Reference 3.6-9), Class 2 and 3 and non-safety class piping, at axial locations where calculated stress by the sum of Equations 9 and 10 in NC/ND-3653 exceed 0.4 times the sum of the stress limits given in NC/ND-3653.
- For non-safety class piping, which has not been evaluated to obtain stress information, leakage cracks are postulated at axial locations that produce the most severe environmental effects.

Leakage cracks are not postulated in moderate-energy fluid system piping located in an area where a break in the high-energy fluid system is postulated, provided that such a crack does not result in environmental conditions more severe than the high-energy break.

3.6.2.1.3 Types of Break/Cracks Postulated

3.6.2.1.3.1 Circumferential Pipe Breaks

Circumferential breaks are postulated in high-energy fluid system piping and branch runs exceeding a nominal pipe size of 1 inch at locations identified by the criteria in Subsection 3.6.2.1.1.2

No breaks are postulated in piping having a nominal diameter less than 1 inch, including instrument lines that are designed in accordance with RG 1.11 (Reference 3.6-13).

If the maximum stress range exceeds the limits specified in Subsection 3.6.2.1.1.2 and the circumferential stress range is greater than 1.5 times the axial stress range, no circumferential break is postulated; only a longitudinal break (Subsection 3.6.2.1.3.2) is postulated.

Following a circumferential break, the two ends of the broken pipe are assumed to move clear of each other unless physically limited by piping restraints, structural members, or pipe stiffness. The effective cross sectional (inside diameter) flow area of the pipe is used in the jet discharge evaluation. Pipe whipping is assumed to occur in the plane defined by the piping geometry and configuration and to initiate pipe movement in the direction of the jet reaction.

3.6.2.1.3.2 Longitudinal Pipe Breaks

Longitudinal breaks are postulated in high-energy fluid system piping and branch runs in nominal pipe sizes 4 inches and larger. Longitudinal breaks are postulated in high- energy fluid system piping at locations of circumferential breaks as described in Subsection 3.6.2.1.3.1

If the maximum stress range exceeds the limits specified in Subsection 3.6.2.1.1.2 and the axial stress range is greater than 1.5 times the circumferential stress range, no longitudinal break is postulated, only a circumferential break (Subsection 3.6.2.1.3.1) is postulated.

Longitudinal breaks in the form of axial split without pipe severance are postulated in the center of the piping at two diametrically opposed points (but not concurrently) located so that the reaction force is perpendicular to the plane of piping configuration and produces out-of-plane bending. Alternatively, a single split is assumed at the section of highest tensile stress as determined by detailed stress analysis (e.g., finite element analysis).

For longitudinal breaks, the dynamic force of the fluid jet discharge is based on a circular or elliptical (2D x 1/2D) break area equal to the effective cross-sectional flow area of the pipe at the break location and on a calculated fluid pressure modified by an analytically or experimentally determined thrust coefficient as determined for a circumferential break at the same location, where D is the effective inner diameter of the pipe. Line restrictions, flow limiters, positive pump-controlled flow, and the absence of energy reservoirs may be taken into account, as applicable, in the reduction of jet discharge.

Piping movement is assumed to occur in the direction of the jet reaction unless limited by structural members, piping restraints, or pipe stiffness as demonstrated by inelastic limit analysis.

3.6.2.1.3.3 Leakage Cracks

Leakage cracks are postulated in high-energy fluid system piping at locations identified in Subsection 3.6.2.1.1.3. Leakage cracks are also postulated in moderate-energy fluid system piping at locations identified in Subsection 3.6.2.1.2.2, except where excluded by the criterion in Subsection 3.6.2.1.2.2.

Leakage cracks are not postulated in 1-inch nominal diameter and smaller piping.

Leakage cracks are postulated in those circumferential directions that result in the most severe environmental, spray wetting, and flooding consequences.

Fluid flow from leakage cracks is based on a circular orifice with a cross-sectional area equal to that of a rectangle one-half the pipe inside diameter in length and one-half the pipe wall thickness in width. The flow from the crack opening is assumed to result in an environment that wets all unprotected components within the compartment, with consequent flooding in the compartment and communicating compartments based on conservatively estimated time period to effect corrective actions.

3.6.2.2 Guard Pipe Assembly Design Criteria

Piping penetrations are an integral part of the PCCV pressure boundary. The annular space of the US-APWR consists of multiple compartments encircling the PCCV. These compartments segregate the PCCV electrical and mechanical penetrations into their own isolated compartments; specifically, electrical penetration rooms and mechanical penetration rooms. By virtue of the plant configuration, as piping crosses from inside to outside the PCCV, it emerges into piping penetration compartments. These compartments are designed to address postulated piping failures and the effect there of, as such, guard pipe assemblies are not required.

3.6.2.3 Analytic Methods to Define Forcing Functions and Response Models

The rupture of a pressurized pipe causes the flow characteristics of the system to change, creating reaction forces that can dynamically excite the piping system. To determine the forcing function for breaks postulated based on the criteria in Subsection 3.6.2.1, the fluid conditions at the upstream source and at the break exit determine the analytical approach. For most applications, one of the following situations exists.

- Superheated or saturated steam
- Saturated or sub-cooled water
- Cold water (non-flashing)

The analytical methods used for the calculation of the jet thrust for the above described situations are based on SRP 3.6.2 (Reference 3.6-3) and ANSI/ANS 58.2-1988 (Reference 3.6-14).

The time dependent forcing function is effected by the thrust pulse resulting from the sudden pressure drop at the initial moment of pipe rupture, the thrust transient resulting from wave propagation and reflection, and the blowdown thrust resulting from the buildup of the discharge flow rate, which may reach a steady state if there is fluid energy reservoir having sufficient capacity to develop a steady jet for a significant interval.

Alternatively, a steady state jet thrust function may be used as outlined in Subsection 3.6.2.3.1.

A rise time of one millisecond is used for the initial pulse.

3.6.2.3.1 Steady State Jet Force

The steady state jet force can be represented by:

$$F_j = C_T P A \quad \text{(Reference 3.6-14)}$$

where

F_j = Jet Force

C_T = Thrust Factor

P = Pipe Internal Pressure Before Break

A = Break Plane Area

The thrust factor C_T is established as a function of fluid state as follows:

(a) Sub-Cooled Water

$$C_T = 2.0 - 0.861\, h^{*2} \qquad (0 \le h^* \le 0.75)$$

$$= 3.22 - 3.0\, h^* + 0.97\, h^{*2} \qquad (0.75 \le h^* \le 1.0)$$

where

$h^* = (h_0 - 180)/(h_{sat} - 180)$

h_0 = Sub-Cooled water enthalpy (BTU/lbm))

h_{sat} = Saturated water enthalpy at pressure P (BTU/lbm)

C_T value varies based on the pressure and enthalpy. In case of saturated water, the minimum value of 1.26 comes closer to maximum value of 2.0 as enthalpy (temperature) decreases. In case of h_0 = 180 BTU/lbm (Temperature T_0 < 212°F) or lower, condition for sub-cooled, non flashing water value of 2.0 is used.

(b) Saturated water-saturated steam:

Use C_T =1.26

The above approach is a conservative method for calculating the thrust factor. Then, pipe pressure drop and diaphragm effects may be considered and the detailed analysis and experiment data may be applied.

Schematics of jets discharging from a pipe break are shown in Figure 3.6-2.

3.6.2.3.2 Time Dependent Break Forcing Function

Time dependent break forcing is applied to RCL piping from postulated pipe breaks in branch lines not included in the LBB. LBB criteria of Subsection 3.6.3 are used to demonstrate that there are no postulated pipe ruptures in the large diameter RCL piping.

A detailed description of the hydraulic transient caused by a postulated pipe rupture is developed for application to the RCL. The thrust and reactive forces resulting from a postulated branch pipe rupture connecting to the RCL are applied in calculating the hydraulic forcing functions for the intact RCL. The RCL forces result from the transient flow and pressure histories in the RCS. A two-step calculation first determines the transient pressure, mass flow rates, and thermodynamic properties as a function of time. The final step calculates the time history of forces at appropriate RCL locations (such as elbows) using the results obtained from the hydraulic analysis, and input of area and directional coordinates.

Hydraulic modeling of the entire RCS results in calculating the pressure, mass flow rate, and density. Time-dependent loads exerted by the fluid on the loops are then determined by applying the pressure, mass flow rate, density to the thrust calculation and plant layout information. Pressure and momentum flux terms become dominant for hydraulic forcing functions during a postulated LOCA. Local fluid conditions in the hydraulic model utilize the inertia and gravitational terms.

The reactor core environment is dynamically analyzed using a blowdown hydraulic analysis to determine the loop forces. A blow-down hydraulic analysis computer code is used to calculate RCS hydraulic transients from predicted flow, quality and pressure of the fluid throughout the system. Refer to Subsection 3.9.2.5 for the description of the blowdown hydraulic analysis.

The equation for determining blowdown hydraulic loads on primary loop components is:

$$F = 144A\left[\left(P - 14.7\right) + \frac{\dot{m}^2}{144\rho g A_m^2}\right]$$

where

F = Forces (lbs)

A = Area of aperture (ft^2)

P = Pressure of system (psia)

$\dot{m}$ = Mass flow rate (lbm/s)

ρ = Density (lbm/ft^3)

g = Pull force constant (gravitational speed) = 32.174 ft-lbm/lb -s^2

A_m = Mass flow area (ft^2)

The RCL is modeled similarly to the model used in blowdown analysis for the purpose of computing forcing functions. A global coordinate system is developed for the entire loop layout, where each mode is then described by blowdown hydraulic information and the streamline force node orientation in the system. The flow areas and projection coefficients are described along the three axes of the global coordinate system. Each node is described by one or two flow apertures as a separate control volume. Forces are broken down orthogonally into x, y, and z components. The summation of the total number of apertures results in orthogonal thrust forces F_x, F_y, and F_z. These thrust forces are applied as input in dynamic analyses of piping and restraints.

3.6.2.4 Dynamic Analysis Methods to Verify Integrity and Operability

Time dependent and steady state thrust reaction loads caused by saturated or superheated steam, saturated or sub-cooled water, and cold water (non-flashing) fluid from a ruptured pipe are used in the analyses of dynamic effects of pipe breaks.

3.6.2.4.1 Jet Impingement Loading on Safety-Related Components

Structural integrity of safety-related SSCs against jet impingement load caused by pipe break is evaluated based on steady state jet force from Subsection 3.6.2.3.

Jet impingement loading is a suddenly applied constant load which can have significant energy content. These loads are generally treated as statically applied loads.

The methods used to evaluate the jet effects resulting from the postulated breaks in high energy piping are described in Appendices C and D of ANSI/ANS 58.2 (Reference 3.6-14). Figure 3.6-2 depicts jet characteristics for the three fluid states. The short term response evaluates the jet impingement load considering a dynamic load factor of 2 and snubber supports to be active. No dynamic load factor is used and the snubbers are considered inactive for the long-term response.

3.6.2.4.2 Dynamic Analysis for Piping Systems

3.6.2.4.2.1 RCL Piping

Appendix 3C provides analysis details for RCL piping. Loads generated by postulated breaks from branch lines are applied to determine structural response of RCL piping.

3.6.2.4.2.2 Piping Other Than RCL Piping

In evaluating the dynamic effects of breaks in high-energy-fluid system piping other than RCL piping, possible break locations and break configurations are first established based on Subsection 3.6.2.1 and the effects of pipe whipping are then evaluated based on Subsection 3.6.2.4.5.

If the above evaluation determines that no safety-related SSCs are damaged, then dynamic analysis is not necessary. If the above evaluation determines that the structural integrity of safety-related SSCs is impaired, pipe whip restraints are incorporated in the high-energy-fluid system piping of concern and dynamic analysis is conducted for the system including the piping and the pipe whip restraints.

In general, a gap is provided between a pipe whip restraint and pipe so as not to restrict thermal movement in the pipe. In the event of a pipe-break accident, the pipe accelerates in the gap due to the jet force and collides with the pipe whip restraint. The dynamic effects of this pipe and pipe whip restraint are usually evaluated by the energy balance method.

Conservatively assuming a fixed jet force at maximum load as described in Subsection 3.6.2.3, the maximum displacement of the pipe and pipe whip restraint can be given by the following equation based on the energy balance method.

$$\left[\text{work done on system}\right] = \left[\begin{array}{l}\text{energy absorbed by pipe} + \\ \qquad\text{energy absorbed by restraint}\end{array}\right] \quad (1)$$

Generally, in Equation (1), energy absorbed by the system is conservatively ignored so that the maximum displacement of the pipe and pipe whip restraint is given by the following equation.

$$\text{work done on system} = \text{energy absorbed by restraint} \quad (2)$$

See Subsection 3.6.2.4.4.1 for the design methodology for pipe whip restraints.

When making a more detailed evaluation, the piping system and restraints are modeled and a time history analysis performed.

3.6.2.4.2.3 Closure of the Feedwater Check Valve

This loading has a short duration of approximately 0.5 seconds and arises from rapidly traveling pressure waves in piping systems connected to the broken piping system. The closure of the feedwater check valve due to a postulated pipe rupture upstream of the valve can increase the magnitude of these loads.

For piping systems with closing check valves, the magnitude of the loadings depends on the valve closure time, with shorter closing times generally causing higher loadings.

The maximum internal pressure and the kinetic energy of the valve disc at the time of closure are used to assure the pressure boundary integrity of the piping. The RELAP-5 code (Reference 3.6-15) can be used to calculate the pressure and kinetic energy in this loading situation.

3.6.2.4.3 Subcompartment Pressure Forces

Subcompartment pressure forces are considered in the evaluation of structures and components. The code GOTHIC (Reference 3.6-16) may be used to calculate the pressure transients in the building subcompartments. The subcompartment pressure forces are determined by integrating the pressure transient over the surface of the structure or component. Jet impingement forces, when applicable, are considered additive to subcompartment pressure forces.

3.6.2.4.4 Pipe Whip Restraints, Barriers and Shields

This section provides analytical methods used to verify integrity and operability of the safety-related SSCs needed to safely shutdown the plant, that are nearby the postulated pipe breaks. The analytical methods apply to the following structures:

- Whip restraint
- Jet impingement barriers and shields

3.6.2.4.4.1 Pipe Whip Restraints

The analytical methods for the design of the pipe whip restraints are described in this subsection.

When pipe whip restraints are required to satisfy protection requirements, the following guidelines are followed to select the type of restraint.

To satisfy varying requirements of available space, allowable building structure reaction, permissible pipe deflection, and equipment operability, the restraint may be a combination of an energy absorbing element and a restraining structure suitable for the geometry required to transfer the load from the whipping pipe to the main building structure or a relatively rigid steel frame to restrain the whipping pipe.

A typical rupture restraint is shown in Figure 3.6-3. The restraint structure is typically a structural steel frame or truss and the energy absorbing element is one of the following:

- U-Bar (One-Dimensional Restraint):
  - This is a U-shaped rod or flat plate, usually of carbon steel, looped around the pipe but not in contact with the pipe to allow unimpeded pipe movement during normal operation and a seismic event. At rupture, the pipe converges with the U-Bar(s), which absorbs the kinetic energy of the pipe by yielding plastically.
- Structural Steel (Two-Dimensional Restraint):
  - This is a structural steel frame assembly enveloping the pipe but not in contact with the pipe that allows unimpeded pipe motion during normal operation and a seismic event. At rupture, pipe converges with the structural steel frame and the frame, which deflects plastically, absorbing the kinetic energy of the pipe.

Pipe whip restraints used to protect SSCs are designed as seismic Category I.

Loads to be evaluated in combination with pipe break forces are Level A or B service loads and are not combined with seismic loads. In the evaluation of structures, loads producing primary stresses are used.

3.6.2.4.4.1.1 Location of Pipe Whip Restraints and Analytical Methods

A. To determine the pipe hinge location, the plastic moment of the pipe is determined in the following manner.

$MP = 1.1\ ZP \times SY$

where

ZP = Plastic section modulus of pipe

SY = Yield stress at pipe operating temperature

1.1 = 10% factor to account for strain hardening

Pipe whip restraints are located as close to the axis of the reaction thrust force break as practicable, but within the length of location of plastic hinge. When it is not possible to locate the whip restraint within the length of plastic hinge, the consequences of the whipping pipe and the jet impingement effect are further investigated.

B. Pipe whip restraints are installed with sufficient annular clearance between them and the process pipe. This provides sufficient clearance for insulation and thermal and seismic movement of the pipe during normal plant operation.

If restraint also functions as a seismic support, the restraint is included in the piping analysis.

C. Restraints generally must not impede the access required to carry out the ISI of pipe welds. If the position of any restraint impedes the access to the pipe welds, part of the restraint can be removed to assure the accessibility.

3.6.2.4.4.1.2 Analysis and Design of Pipe Whip Restraint

The analysis and design of the pipe whip restraints for the effects of postulated pipe rupture conform to the following criteria.

A. Pipe whip restraints are designed based on the principle of energy absorption by considering the behavior of material's elasticity/plasticity and strain hardening.

B. Coefficient of rebound 1.1 is applied to jet thrust forces.

C. Energy absorption by the broken pipe is assumed to be zero, except in the case of calculating to check the formation of a plastic hinge. The developed thrust force is assumed to be applied to move a broken pipe directly, and is not reduced by the forces required to bend the pipes.

D. In the elasticity/plasticity design, the kinetic energy of the pipe is absorbed by the restraint by yielding plastically. The strain in the restraint is limited as shown below.

$e = 0.5\varepsilon_u$

where

e = Allowable strain used in the design

ε_u= Ultimate homogeneous tensile strain.

3.6.2.4.4.2 Jet Impingement Barriers and Shields

Barriers or shields are provided to protect essential equipment, including instrumentation, from the effects of jet forces resulting from postulated pipe breaks. Generally, protection provided by walls, floors, and columns is sufficient to meet protection requirements. Loading combinations and design criteria for barriers and shields are described in Section 3.8.

3.6.2.4.4.3 Pipe Whip Impact on Structures

The evaluation of structures that are impacted by whipping pipes is described below.

Following a postulated pipe rupture, pipe whip into surrounding structures will occur, if the pipe is not sufficiently restrained. The level of energy in the whipping pipe may be determined by calculating work quantities using simplified methods. The external work is calculated by multiplying the break force acting on the whipping pipe by the distance (from its initial position, before the pipe break, to the final position when the pipe impacts the structure) traveled by that break force.

As the impact occurs on concrete targets, the section of the pipe near the impact area is rapidly decelerated and crushed. The magnitude and the duration of the impact loading are determined by characteristics of both the whipping pipe and the concrete barrier. In the evaluation of the target, both local and overall response is considered. The evaluation procedures are as described in References 3.6-17, 3.6-18, 3.6-19, and 3.6-20. For impact into concrete, the concrete ductility ratio is calculated for this impact, and it is assumed to be within the limits specified in Subsection 3.5.3. The evaluation of the response of steel targets relies on empirical formulae established from test data. Various formulae and their range of application are described in Reference 3.6-18.

If the whipping pipe impacts another pipe, the evaluation criteria are provided below.

- A whipping pipe is not considered capable of damaging an impacted pipe of equal or greater diameter and thickness. It is considered capable of (a) rupturing impacted pipes of smaller nominal pipe sizes, and (b) developing through-wall leakage cracks in pipe of equal or greater diameter having a lesser wall thickness (Reference 3.14), except where analytical or experimental, or both, data for the expected range of impact energies demonstrate the capability to withstand the impact without rupture. Effects on environment and shutdown logics associated with the failure of the impacted pipe are considered.

3.6.2.5 Implementation of Criteria Dealing with Special Features

The COL Applicant is to discuss the implementation of criteria dealing with special features, if any.

3.6.3 LBB Evaluation Procedures

This subsection describes the design basis to eliminate the dynamic effects of pipe rupture (Subsection 3.6.2) for the selected high-energy piping systems of RCL piping, RCL branch piping, and main steam piping. GDC 4 of Appendix A to 10 CFR 50 (Reference 3.6-1) allows exclusion of dynamic effects associated with pipe rupture from the design basis, when analyses demonstrate that the probability of pipe rupture is extremely low for the applied loading resulting from normal conditions, anticipated transients and a postulated SSE. The LBB evaluation is performed in accordance with SRP 3.6.3 (Reference 3.6-4).

The LBB analysis combines normal and abnormal (including seismic) loads to determine a critical crack size for a postulated pipe break. The critical crack size is compared to the size of a leakage crack for which detection is certain. If the leakage crack size is sufficiently smaller than the critical crack size, the LBB requirements are satisfied.

The piping systems, for which the LBB criterion is not applied, are evaluated for dynamic effects of postulated pipe rupture at locations defined in Subsection 3.6.2. For piping systems for which LBB is demonstrated, the evaluation of environmental effects including spray wetting, and flooding is still performed for breaks or leakage cracks in accordance with Subsection 3.6.2.

The COL Applicant is to identify the types of as-built materials and material specification used for base metal welds, weldments, and safe ends for piping evaluated for LBB. Additionally, the COL Applicant is to provide information related to as-built material and material specifications for piping including toughness (J-R curves) and tensile strength (stress-strain curves), yield and ultimate strength, welding process/methods used, provide confirmation that the actual plant-specific stress analysis based on final as-built plant piping layout and material properties and welds satisfy the bounding LBB analysis, and provide confirmation that the final bounding LBB analysis addresses all plant-specific and generic degradation mechanisms in the as-built piping systems. This issue is to be resolved in ITAAC described in Table 2.3-2 of Tier 1 Chapter 2.3.

3.6.3.1 Application of LBB Criteria

Piping systems to which LBB criteria are applied are high-energy systems with well defined loading combinations and conditions. LBB criteria are applied to the following high energy piping systems (see Appendix 3E).

- RCL Piping
- RCL branch piping with nominal diameter of 6 inches or larger, except for steam within the piping for the pressurizer safety valve and power operated relief valve
- Main Steam Pipe in PCCV

The LBB evaluations demonstrate that for piping meeting the criteria, sudden catastrophic failure of the pipe is not credible. This is demonstrated by plant design, operation history, tests, or analyses that breaks are less likely to occur under the effects of thinning by erosion or corrosion, stress corrosion cracks, water hammer, fatigue (thermal or mechanical), thermal aging, thermal stratification, creep fatigue, indirect factors, and cleavage.

3.6.3.2 Design Criteria for LBB

In order to assure successful application of LBB, the following guidelines are satisfied.

- Design Features:
  - Perform 100% preservice inspection of all welds.
  - Assure maximum stress due to steady-state vibration is well within the applicable fatigue endurance limits.
  - Use of materials of adequate toughness.
  - Leak detection systems inside the PCCV meet the requirements of RG 1.45 (Reference 3.6-21). Leak detection system is described in Subsection 5.2.5.
  - The maximum stress and the normal stress are within the (BACs) (Subsection 3.6.3.4) for an entire piping system or analyzable portion.
  - For piping systems where design drawings are used for LBB evaluation, the as-built conditions are verified to assure that the design checked for LBB is consistent with the final as-built configuration. The as-built verification includes, but is not limited to, the following:
    1. Material and material specification
    2. Pipe geometry
    3. Support locations and their characteristics
    4. Locations and weights of components such as valves
  - ISI and testing of snubbers is performed to assure low snubber failure rate (Subsection 3.12.6.6).
  - Potential degradation by erosion, erosion/corrosion and erosion cavitation is evaluated to assure low probability of pipe failure.
  - Adjacent structures and components are designed for the SSE event to assure low probability of indirect pipe failure.

Dynamic effects associated with the postulated pipe rupture need not be considered when technically justified by application of the LBB criteria. This includes the following:

- Pipe Whip and reaction forces
- Jet Impingement Loads
- Reactor cavity asymmetric pressurization transients
- Subcompartment pressurization
- Breaks associated with the transient loads in intact portion of the system, such as loads on reactor internal, or SG internal, and pump overspeed

The evaluation of flooding and environmental effects associated with leakage cracks or circumferential or longitudinal pipe breaks is not affected by application of the LBB approach.

3.6.3.3 Potential Failure Mechanism for Piping

High-energy piping is evaluated for potential failure mechanisms and other degradation sources in order to assure acceptability of the LBB criteria. Based on guidance provided by SRP 3.6.3 (Reference 3.6-4), the following pipe failure mechanisms and degradation sources could challenge the integrity of the piping:

- Water Hammer
- Creep Damage
- Wall Thinning Induced by the Effects of Erosion/Corrosion
- stress corrosion cracking (SCC)
- Fatigue
- Thermal Aging

Each failure mechanism and degradation source is evaluated below and confirmed as credible, thereby confirming LBB eligibility.

3.6.3.3.1 Water Hammer

RCL Piping

RCL piping design features that prevent water hammer loads include maintaining temperature within specified parameters through control rod positioning and boric acid concentration, and controlling pressures within specified steady-state conditions through pressurizer heaters and pressurizer spray. Normal operating conditions for the RCL are at pressures in excess of the saturation pressure of the fluid. Water hammer does not occur under these conditions. In addition, the piping is designed for all transients identified for normal, upset, emergency and faulted service conditions as identified for Levels A, B, C and D, respectively. Therefore, water hammer is not considered a credible pipe failure mechanism within RCL piping.

RCL Branch Piping

Water hammer in RCL branch piping can occur by seal water in case of blowdown of pressurizer safety valve and relief valve lines, has been experienced in the past. Due to this reason, analysis of water hammer on these piping has been performed in order to assure integrity of piping and support design. However, LBB criteria are not applied to these piping.

As to other RCL branch piping, water hammer has been reported for ECCS piping in the past. In US-APWR, however, operational control is applied in a way that avoids water hammer.

Water hammer is not experienced in RCL branch piping other than in these areas and the piping is designed to preclude the voiding condition according to operation at a pressure greater than the saturation pressure of the coolant. Furthermore, no valve that requires immediate action, such as pressurizer safety valve or relief valve, is present in the piping.

From the above reasons, water hammer is not anticipated to occur regarding RCL branch piping that LBB criteria is applied.

Main Steam Piping

Steam hammer in the main stem line is prevented by the design features included in system design. These features include prevention of slug formation by use of drain pots and proper sloping of the line. The following system design provisions address concerns regarding steam hammer within the main steam line and identify the significant dynamic loads included in the main steam piping design.

Protection against the potential occurrence of steam hammer is provided through operations and maintenance procedures that provide for slowly heating up (to avoid condensate formation from hotter steam on colder surfaces), caution against fast closing of the main steam isolation valves except when necessary, and emphasize proper draining.

A turbine trip, which initiates a rapid closure of the stop valve, is a design condition analyzed for the safety-related portion of main steam piping and associated components. This stress analyses assure that rapid valve closure does not challenge the integrity of piping. Therefore, the main steam piping is adequately designed to sustain steam hammer or similar high frequency hydrodynamic events.

3.6.3.3.2 Creep Damage

Pipe materials are selected to satisfy operational temperature limits not to exceed 700°F for ferritic steel piping and not to exceed 800°F for austenitic stainless steel piping. Therefore, the piping is designed to operate at temperatures less than that for which creep and creep-fatigue is a concern.

3.6.3.3.3 Wall Thinning Induced by the Effects of Erosion/Corrosion

RCL Piping

RCL piping utilizes austenitic stainless steel, which provides a high resistance to wall thinning induced by erosion, erosion/corrosion, and erosion/cavitation. Historically, there have been no recorded cases of erosion-induced wall thinning within the primary loops of operating plants. Since the US-APWR primary loop design maintains a flow velocity of approximately 55 feet per second and water chemistry similar to other pressurized water reactors, degradation of RCL pipe wall thicknesses by erosion, erosion/corrosion, or erosion/cavitation is not considered a credible failure mechanism for RCL piping.

RCL Branch Piping

Similar to the primary loops, RCL branch piping utilizes austenitic stainless steel highly resistant to wall thinning. In addition, no cases of erosion induced wall thinning have been reported for RCL branch piping in operating plants with similar operating parameters. Therefore, wall thinning induced by the effects of erosion is not considered a credible failure mechanism for RCL branch piping.

Main Steam Piping

Although fabricated from SA333 Grade 6 carbon steel, wall thinning induced by the effects of erosion is not anticipated within main steam piping. The MSS operates with high quality steam at high temperatures, thereby circumventing the chemical and temperature initiators that erode carbon steel surfaces. Therefore, wall thinning induced by the effects of erosion is not considered a credible failure mechanism for main steam piping.

3.6.3.3.4 SCC

System operations are maintained that inhibit SCC, primarily through use of materials with low susceptibility, stress limitations, and chemistry control.

RCL Piping

The RCL piping is constructed of austenitic stainless steel materials that are proven through years of successful industry usage to resist SCC. The recommendations of RG 1.44 (Reference 3.6-22) in the use of sensitized stainless steel are applied by the US-APWR.

In addition to stress control in accordance with ASME Code, Section III, Class 1 piping (Reference 3.6-12), fluid chemistry is maintained as low- or no-oxygen environments. While RCL piping tensile stresses are within design allowables, residual tensile stresses also develop within welds. These residual stresses are self-equalizing, and industry experience with other pressurized water reactors has affirmed their acceptability.

Butting nozzles located at safe ends with a stainless steel to carbon steel interface are performed utilizing a high nickel alloy material. An alloy consisting of nickel, chromium, and iron has been selected and qualified based on the non-susceptibility to SCC.

RCL Branch Piping

Similar to the primary loops, RCL branch piping utilizes austenitic stainless steel which is highly resistant to SCC. Therefore, SCC is not considered a credible failure mechanism within both primary and branch RCL piping.

Main Steam Piping

Although fabricated from ferritic SA333 Grade 6 carbon steel, SCC is not anticipated within main steam piping. While SCC in main steam piping could result from SG moisture, the secondary side utilizes an all-volatile water treatment chemistry. All volatile treatment resists causticity in the SG bulk liquid environment which resulted in chemical imbalances from SCC of SG tubing previously experienced in some operating plants. No caustic SCC on the ferritic steam lines have occurred with all volatile water treatment. Therefore, SCC is not considered a credible failure mechanism within the main steam piping.

3.6.3.3.5 Fatigue

Low-Cycle Fatigue

Class 1 piping satisfying the requirements of ASME Code, Section III (Reference 3.6-12) are designed for low-cycle fatigue postulated to occur during normal operation and anticipated transients, including thermal stratification. No significant transients that have the ability to generate low-cycle fatigue are postulated to occur during normal operation of main steam piping. Therefore, low-cycle fatigue is not a potential failure mechanism of piping.

High-Cycle Fatigue

The reactor coolant pumps generate vibrations capable of causing high-cycle fatigue within the RCL piping. Operational controls are established to minimize vibrations during hot functional testing and normal operation. In addition, pump vibrations that could lead to adverse high-cycle fatigue in piping are also monitored by alarming when the vibrations exceed acceptable limits. These precautions maintain the piping in operational ranges with very low probability of failure.

3.6.3.3.6 Thermal Aging

RCL Piping and RCL Branch Piping

Stainless casting is not used for the RCL and RCL branch piping. The fracture toughness is also not a concern, because the amount of the ferrite contents in welding material is low.

Main Steam Piping

Material selected for the MSS piping is not susceptible to dynamic strain aging effects.

3.6.3.3.7 Other Mechanisms

Failures at piping cleavages are not credible in stainless steel piping systems operated within the thermal parameters defined for the RCS. Carbon steel used for main steam piping is resistant to cleavage failure at defined operating temperatures. Material fracture toughness tests demonstrate the ability of selected piping to perform under defined operating conditions.

Other postulated pipe failure mechanisms include the effects of secondary events such as surrounding SSC failures or missile impacts.

Surrounding SSCs are designed to preclude damage to RCL piping, RCL branch piping, and main steam piping by meeting seismic Category I or seismic Category II requirements. Therefore, the secondary effects of surrounding SSCs will have no adverse effect on safety-related SSCs.

Damage from missiles is precluded by design or separation in accordance with Section 3.5.

3.6.3.4 Analytical Methods and Criteria

The method and criteria used for LBB analysis are consistent with the guidelines in NUREG-1061 (Reference 3.6-23) and Standard Review Plan 3.6.3, Rev. 1 (Reference 3.6-4).

LBB BACs are prepared for each applicable piping system. These curves provide the design guidelines meeting the allowable standards for stress limits and LBB acceptance criteria. The critical location having the highest stress point from piping analysis is determined and compared to the BAC. The maximum stress location must be on or below the BAC to satisfy the LBB criteria.

The bounding analysis methods are described in Appendix 3B. Preparation of BAC provides an evaluation method meeting the requirements and guidelines of the NRC documents.

Piping analysis boundary is from one terminal end or anchor to the other terminal end or anchor. Connection to a larger pipe or a component of larger diameter is generally considered a terminal end. LBB evaluation is based on the fracture mechanics of cracks and analysis of break mechanism which compares the selected leakage cracks with critical crack sizes. This analysis method is outlined below.

Crack stability is demonstrated by leak detection analysis on the assumption that postulated circumferential cracks are limited if the stresses are on or below the “LBB BAC.”

3.6.3.4.1 Leak Detection Capability

Leakage flaws are postulated for piping identified in Subsection 3.6.3.1 as following. Sizes of postulated flaws are sufficiently large so that leaks can be detected by a sufficient margin. Leak rate of 10 times the capability of the leak detector is postulated for normal operating load combinations.

Rated detection capability of the leak detector for reactor coolant in the containment is 1.0 gpm within one hour. The methods used for the reactor coolant are the containment sump water levels, inventory balance, and the radiation in the environment of containment. The method to detect leaks from the main steam pipe in containment is the containment sump water level. The condensate water flow rate of containment air cooler, containment environmental pressures, and temperatures also suggest the possibility of leakage.

3.6.3.4.2 Stability and Critical Crack Sizes

The local and global break mechanisms are evaluated, as required, to provide a margin to the break size and load. Local mode of breaks deals with the behaviors of crack tips: slowdown, start, development, and instability. Mechanisms of local breaks are evaluated by using J integration method for ferritic steel pipes. Global break mode deals with the behaviors of all cross sections: initial yield, strain hardening, and plastic hinge formation. Global break mechanisms (critical loading method) are evaluated for the stainless steel pipes not containing the casting materials and shielded metal arc weld. From these

evaluations, the critical crack sizes are determined, so that the cracks larger than critical crack size have unstable features of growth.

3.6.3.4.3 Allowable Standards

Crack size margin is determined by comparing the crack sizes determined above to the critical crack size. The critical crack size is determined by adding maximum individual loads by absolute summation. The margin of two applies to the margin between the critical flaw size and the 10-gpm leakage size flaw. The margin of 1.0 on the load is used, since the loads are added by absolute sum.

3.6.3.4.4 Bounding Analysis Methods

BACs are developed for each different combination of material type, pipe size, pressure and temperature. These curves provide “Maximum crack stress” versus “Corresponding stress meeting LBB standards.” These curves are used to satisfy the requirements for LBB.

Critical location is the maximum stress location determined by the results of pipe stresses.

At all critical locations, loads related to maximum stress calculation are added by using absolute sums. Loads are combined as shown below.

| *Pressure* |+ | *dead load* | + | *thermal* (100% *power*)* | + | *SSE* |

* Including applicable (thermal) stratification loads

Standard stresses are calculated according to the following combinations of loads by using arithmetical sum method at critical location.

Pressure + *dead load* + *thermal* (100% *power*)*

* Including applicable (thermal) stratification loads

Stresses by longitudinal force and bending moment are calculated by the following formula.

$$\sigma = F/A + M/Z$$

where

σ	=	Stress
F	=	Longitudinal force
M	=	Bending moment
A	=	Cross-sectional area
Z	=	Section modulus

Bending moments for the applicable load combination are calculated by the following formula:

$$M = \sqrt{MX^2 + MY^2 + MZ^2}$$

where

M = Bending moment related to applicable load

MX = X component of bending moment

MY = Y component of bending moment

MZ = Z component of bending moment

The Y and Z axes are those perpendicular to the longitudinal direction X.

The longitudinal loads and bending moments in the normal and maximum cases are calculated by the method shown below.

Normal operating loads are calculated by the following formula.

$$F = F_{DW} + F_{Th} + F_P$$

$$MX = (MX)_{DW} + (MX)_{Th}$$

$$MY = (MY)_{DW} + (MY)_{Th}$$

$$MZ = (MZ)_{DW} + (MZ)_{Th}$$

Subscripts in the above formulae indicate the following load cases.

DW = Dead load

Th = Normal thermal expansion (100% power)*

P = Internal pressure

* Including applicable (thermal) stratification loads

Loads related to max stress are calculated by the following formulae.

$$F = | F_{DW} | + | F_{Th} | + | F_P | + | F_{SSEINERTIA} | + | F_{SSEAM} |$$

$$MX = | (MX)_{DW} | + | (MX)_{Th} | + | (MX)_{SSEINERTIA} | + | (MX)_{SSEAM} |$$

$$MY = | (MY)_{DW} | + | (MY)_{Th} | + | (MY)_{SSEINERTIA} | + | (MY)_{SSEAM} |$$

$$MZ = | (MZ)_{DW} | + | (MZ)_{Th} | + | (MZ)_{SSEINERTIA} | + | (MZ)_{SSEAM} |$$

Subscripts in the above formulae indicate the following load cases.

Subscripts *DW, Th* and *P* indicate the same load cases as normal case.

$SSEINERTIA$ = SSE Inertia

$SSEAM$ = SSE Anchor Motion.

In order to compare the results of stress calculations with the BACs, the following procedure is used. “Normal stress” versus “Maximum stress” is plotted on the BAC for a particular system. LBB analysis and margin are met if the locations are on or below the BAC.

3.6.3.4.5 Develop the BACs

BACs for LBB piping systems are included in Appendix 3B.

3.6.3.4.6 Pipe, Material, and Operating Conditions

Data is summarized in Table 3B-1 in Appendix 3B.

3.6.3.4.7 Piping Physical Properties

Data is summarized in Table 3B-1 in Appendix 3B.

3.6.3.4.8 Calculation Steps

LBB Evaluation procedure is shown on the flow chart of Figure 3.6-4.

3.6.3.4.9 Evaluation of Piping System Using BAC

This information will be provided in the Technical Report (Reference 3.6-24).

3.6.3.4.10 Bounding Analysis Results

Bounding analysis results will be provided in the Technical Report (Reference 3.6-24).

3.6.3.4.11 Differences in Inspection Criteria for Class 1 and 2 Systems

Class 1 and 2 systems are subjected to ISI requirements from ASME Code, Section XI (Reference 3.6-11). For Class 1 piping, terminal ends and dissimilar metal welds are volumetrically inspected, along with other locations, to total 25 percent of the welds. For Class 2 piping, the requirement is to volumetrically inspect the terminal ends and other locations to total 7.5% of the welds. These requirements were developed by ASME Code, Section XI consistent with the different safety classes of these systems.

The LBB evaluations are based on the ability to detect a potential leaking crack; not the ability to find cracks by ISI. The criteria or methods of the LBB evaluations are the same for ASME Code, Section III, Class 1 and 2 (References 3.6-12 and 3.6-9).

3.6.3.4.12 Differences in Fabrication Requirements of ASME Code, Section III Class 1 and Class 2 Piping

The significant difference among ASME Code, Section III, Class 1 and 2 seamless pipes occurs in the nondestructive examination requirements. The Class 1 seamless pipe examination requirements include an ultrasonic testing examination, whereas Class 2 does not. In addition, the Class 1 examination requirements for a circumferential butt welded joint include radiographic testing and magnetic particle or liquid penetrant examination where Class 2 does not.

For the fabrication of welds in the ASME Code, Section III, Class 1 and Class 2 pipes, there are no significant differences.

The differences in fabrication and nondestructive examination requirements do not affect the LBB analyses assumptions, criteria, or methods.

3.6.3.4.13 Documentation of LBB Evaluation

Documentation of the LBB evaluation will be provided in the Technical Report (Reference 3.6-24).

3.6.3.5 Technical Report

The following information will be provided in the Technical Report (Reference 3.6-24).

- Representative and bounding material properties.
- Design piping isometric drawings showing location of supports and their characteristics and location and weights of components such as valves.
- Evaluation of piping system using BAC and bounding analysis results.

3.6.4 Combined License Information

COL 3.6(1) *The COL Applicant is to identify the site-specific systems or components that are safety-related or required for safe shutdown that are located near high-energy or moderate-energy piping systems, and are susceptible to the consequences of these piping failures. The COL Applicant is to provide a list of site-specific high-energy and moderate-energy piping systems, which includes a description of the layout of all piping systems where physical arrangement of the piping systems provides the required protection, the design basis of structures and compartments used to protect nearby essential systems or components, or the arrangements to assure the operability of safety-related features where neither separation nor protective enclosures are practical. Additionally, the COL Applicant is to provide the failure modes and effect analyses that verifies the consequences of failures in site-specific high-energy and moderate-energy piping does not affect the ability to safely shut down the plant.*

COL 3.6(2) *Deleted*

COL 3.6(3) *Deleted*

COL 3.6(4) *The COL Applicant is to implement the criteria of the following subsections for defining break and crack locations and configurations, and the locations and configurations of design basis pipe break and crack locations and configurations for site-specific high-energy and moderate-energy piping systems. The COL Applicant is to identify the postulated rupture orientation of each postulated break location for site-specific high-energy and moderate-energy piping systems. The COL Applicant is to implement the appropriate methods to assure that as-built configuration of site-specific high-energy and moderate-energy piping systems is consistent with the design intent and provide as-built drawings showing component locations and support locations and types that confirms this consistency.*

COL 3.6(5) *Deleted*

COL 3.6(6) *The COL Applicant is to discuss the implementation of criteria dealing with special features, if any.*

COL 3.6(7) *Deleted*

COL 3.6(8) *Deleted*

COL 3.6(9) *Deleted*

3.6.5 References

3.6-1 Domestic Licensing of Production and Utilization Facilities, Energy. Title 10, Code of Federal Regulations, Part 50, U.S. Nuclear Regulatory Commission, Washington, DC.

3.6-2 Plant Design for Protection Against Postulated Piping Failures in Fluid Systems Outside Containment, Standard Review Plan for the Review of Safety Analysis Reports for Nuclear Power Plants. NUREG-0800, SRP 3.6.1, Rev.3, U.S. Nuclear Regulatory Commission, Washington, DC, March 2007.

3.6-3 Determination of Rupture Locations and Dynamic Effects Associated with the Postulated Rupture of Piping, Standard Review Plan for the Review of Safety Analysis Reports for Nuclear Power Plants. NUREG-0800, SRP 3.6.2, Rev.2, U.S. Nuclear Regulatory Commission, Washington, DC, March 2007.

3.6-4 Leak-Before-Break Evaluation Procedures, Standard Review Plan for the Review of Safety Analysis Reports for Nuclear Power Plants. NUREG-0800, SRP 3.6.3, Rev.1, U.S. Nuclear Regulatory Commission, Washington, DC, March 2007.

3.6-5 Postulated Rupture Locations in Fluid System Piping Inside and Outside Containment, Standard Review Plan for the Review of Safety Analysis Reports for Nuclear Power Plants. NUREG-0800 BTP 3-4, Rev.2, U.S. Nuclear Regulatory Commission, Washington, DC, March 2007.

3.6-6 Protection Against Postulated Piping Failures in Fluid Systems Outside Containment, Standard Review Plan for the Review of Safety Analysis Reports for Nuclear Power Plants. NUREG-0800 BTP 3-3, Rev.3, U.S. Nuclear Regulatory Commission, Washington, DC, March 2007.

3.6-7 Reactor Site Criteria, Energy. Title 10, Code of Federal Regulations, Part 100, U.S. Nuclear Regulatory Commission, Washington, DC.

3.6-8 Two-Phase Jet Loads. NUREG/CR 2913, U.S. Nuclear Regulatory Commission, Washington, DC, January 1983.

3.6-9 ASME, Section III, Division 1, Class 2 and Class 3 Piping, NC-3600 (Class 2) and ND-3600 (Class 3). American Society of Mechanical Engineers.

3.6-10 Nuclear Power Plant Components. ASME Section III, and Subarticle NE-1120 for Containment Penetrations, American Society of Mechanical Engineers.

3.6-11 In-Service Examination of Pipe Welds. ASME Section XI, IWA-2400, American Society of Mechanical Engineers.

3.6-12 ASME, Section III, Division 1, Class I Piping, NB-3653. American Society of Mechanical Engineers.

3.6-13 Instrument Lines Penetrating Primary Reactor Containment Safety Guide 11, Supplement to Safety Guide 11, Backfitting Considerations. Regulatory Guide 1.11, U.S. Nuclear Regulatory Commission, Washington, DC, May 1971.

3.6-14 Design Bases for Protection of Light Water Nuclear Power Plants Against Effects of Postulated Pipe Rupture. ANSI/ANS-58.2-1988, American National Standards Institute/American Nuclear Society.

3.6-15 RELAP-5, Transient Hydraulic Analysis Program, MOD 3.2, Idaho National Engineering and Environmental Laboratory, Idaho Falls, Idaho, USA.

3.6-16 GOTHIC Containment Analysis Package User Manual, Version 7.2a(QA), NAI 8907-02, Rev. 17, Numerical Applications Inc., Richland, WA, January 2006.

3.6-17 Stevenson, J.D. et. al., Structural Analysis and Design of Nuclear Power Plant Facilities. American Society of Civil Engineers.

3.6-18 Roemer, R.E. et al., Evaluation of Pipe Whip Impact on Concrete Barriers-A Simplified Approach. Proceeding of Second ASCE Conference on Civil Engineering and Nuclear Power, Volume IV (Impactive and Impulsive Loads), 1980.

3.6-19 Enis, R.O. et. al., A Design Guide for Evaluation of Barriers for Impact from Whipping Pipes. Proceeding of Second ASCE Conference on Civil Engineering and Nuclear Power, Volume IV (Impactive and Impulsive Loads), 1980.

3.6-20 Report of the ASCE Committee on Impactive and Impulsive Loads. Second ASCE Conference on Civil Engineering and Nuclear Power, Volume V, 1980.

3.6-21 Reactor Coolant Pressure Boundary Leakage Detection Systems. Regulatory Guide 1.45, U.S. Nuclear Regulatory Commission, Washington, DC, May 1973.

3.6-22 Control of the Use of Sensitized Stainless Steel. Regulatory Guide 1.44, U.S. Nuclear Regulatory Commission, Washington, DC, May 1973.

3.6-23 Evaluation of Potential Pipe Breaks, NUREG-1061, Vol. 3, U.S. Nuclear Regulatory Commission Piping Review Committee, November 1984.

3.6-24 US-APWR Leak-Before-Break Evaluation. MHI Technical Report, Later.

Table 3.6-1 High and Moderate Energy Fluid Systems

System	High-Energy(1)	Moderate-Energy(1)
Reactor Coolant System (RCS)	X	-
Chemical and Volume Control System (CVCS)	X	-
Safety Injection System (SIS)	X	-
Residual Heat Removal System (RHRS) (2)	-	X
Emergency Feedwater System (EFWS) (2)	-	X
Feedwater System (FWS)	X	-
Main Steam Supply System (MSS)	X	-
Containment Spray System (CSS)	-	X
Component Cooling Water System	-	X
Spent Fuel Pit Cooling and Purification System (SFPCS)	-	X
Essential Service Water System (ESWS)	-	X
Gaseous Waste Management System (GWMS)	-	X
Liquid Waste Management System (LWMS)	-	X
Solid Waste Management System (SWMS)	-	X
Sampling System (SS)	X	-
Steam Generator Blowdown System (SGBDS)	X	-
Refueling Water Storage System (RWS)	-	X
Primary Makeup Water System (PMWS)	-	X
Auxiliary Steam Supply System (ASSS)	X	-
Instrument Air System (IAS)	-	X
Fire Service System (FSS)	-	X
Station Service Air System (SSAS)	-	X
Chilled Water System (VCWS)	-	X

Notes

1. High-energy piping includes those systems or portions of systems in which the maximum normal operating temperature exceeds 200°F or the maximum normal operating pressure exceeds 275 psig.

   Piping systems or portions of systems pressurized above atmospheric pressure during normal plant conditions and not identified as high-energy are considered as moderate-energy.

   Piping systems that exceed 200°F or 275 psig for two percent or less of the time during which the system is in operation are considered moderate-energy.

2. The RHRS and EFWS lines are classified as moderate-energy based on the 2 percent rule. These lines experience high-energy conditions for less than 2 percent of the system operation time. The portions of the RHR system from the connections to the RCS to the first closed valve in each line are high-energy.

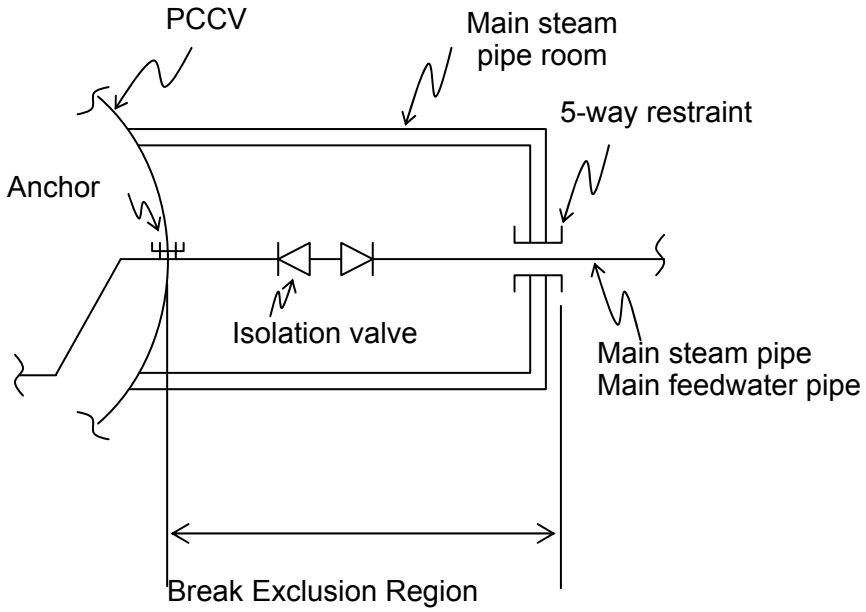

Figure 3.6-1 Break Exclusion Region- Main Steam Pipe Room

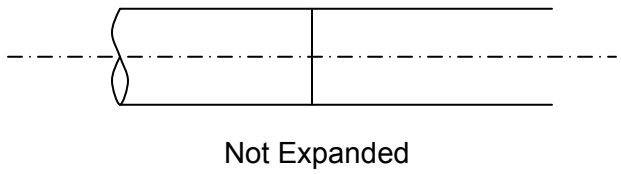

a. Sub-cooled water (non-flashing)

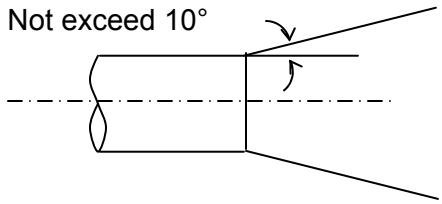

b. Sub-cooled water (flashing) and saturated water

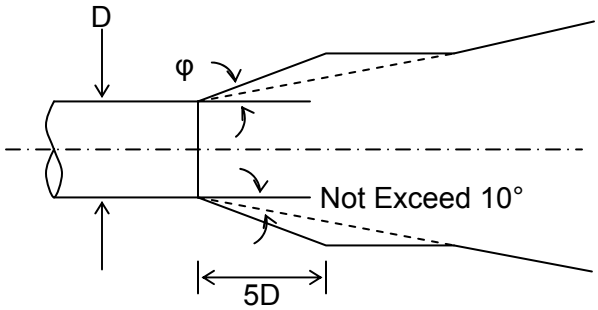

However, φ is calculated in assumption of isenthalpic expansion.

c. Saturated steam

Figure 3.6-2 Characteristics of Discharging Jets

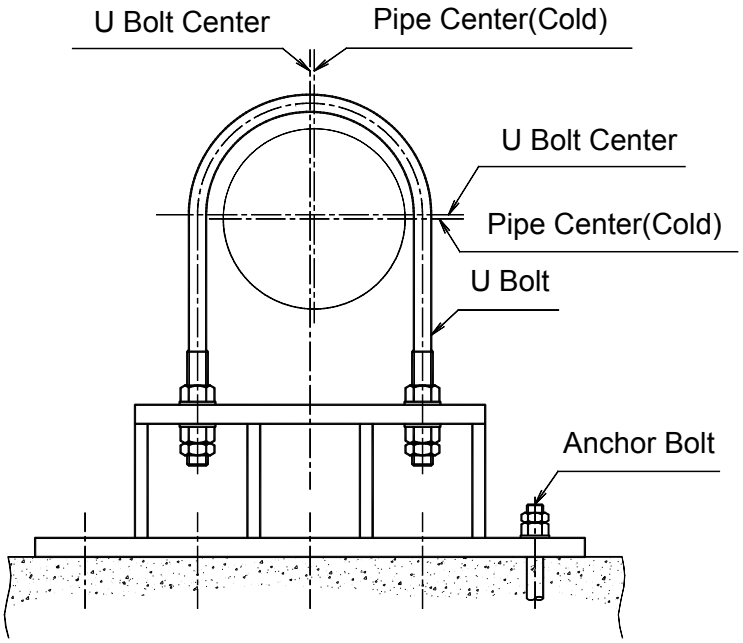

a. U-Bar (One-Dimensional Restraint)

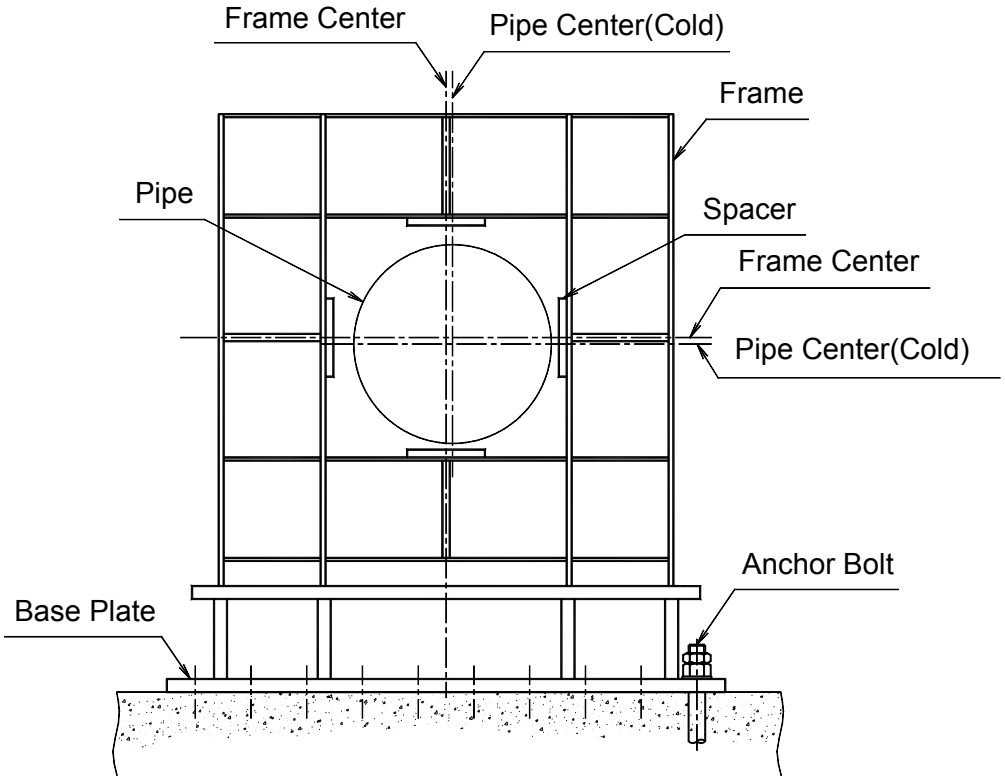

b. Structural Steel (Two-Dimensional Restraint)

Figure 3.6-3 Typical Rupture Restraints

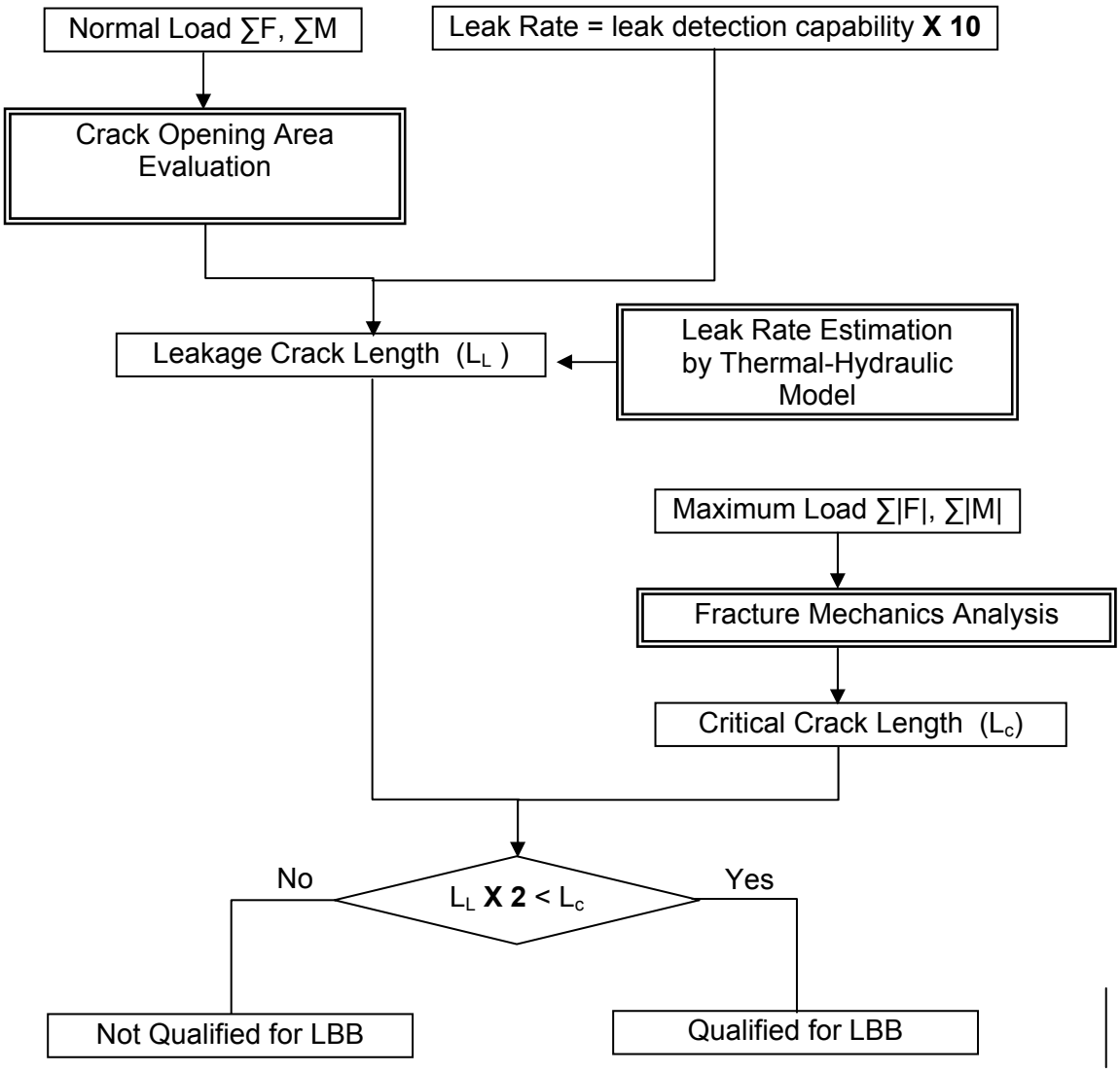

Figure 3.6-4 LBB Evaluation Procedure of the US-APWR

3.7 Seismic Design

The SSCs of the US-APWR are designed as required by the GDC 2 of 10 CFR 50, Appendix A (Reference 3.7-1), to withstand the effects of natural phenomena, including earthquakes, without jeopardizing the plant safety. The US-APWR SSCs are assigned to one of three seismic categories (seismic category I, seismic category II, or non-seismic [NS]) depending on the nuclear safety function of the particular SSC, as discussed in Subsection 3.2.1. The US-APWR standard plant seismic design is based on the SSE and the OBE as discussed in Subsection 3.7.1.1. The OBE defines the magnitude of the ground motion that if exceeded would require that the plant be shut down.

The values of peak ground accelerations (PGAs) and the response spectra of the seismic ground motion in horizontal and vertical directions characterize the magnitude of the design basis earthquake. Certified seismic design response spectra (CSDRS) define the site-independent SSE for the seismic design of standard plant structures, and the ground motion response spectra (GMRS) define the horizontal and vertical response spectra of the site-dependent seismic motion.

The COL Applicant is to validate the site-independent seismic design of the standard plant for the site-specific conditions, including geological, seismological, and geophysical characteristics, and to develop the site-specific GMRS as free-field outcrop motions on the uppermost in-situ competent material.

The COL Applicant is responsible for the seismic design of those seismic category I and seismic category II SSCs that are not part of the US-APWR standard plant. Spectra appropriately derived from the GMRS can be used to define the site-specific SSE design ground motion for the design of those seismic category I and II buildings and structures that are not part of the US-APWR standard plant. The response spectra of site-specific SSEs are developed following the requirements of RG 1.165 (Reference 3.7-2), or RG 1.208 (Reference 3.7-3), and represent the envelope of the foundation input response spectra (FIRS) and a minimum response spectra as discussed in Subsection 3.7.1.1.

The COL Applicant is to develop site-specific GMRS and FIRS by an analysis methodology, which accounts for the upward propagation of the GMRS. The FIRS are compared to the CSDRS to assure that the US-APWR standard plant seismic design is valid for a particular site. If the FIRS are not enveloped by the CSDRS, the US-APWR standard plant seismic design is modified as part of the COLA in order to validate the US-APWR for installation at that site.

3.7.1 Seismic Design Parameters

3.7.1.1 Design Ground Motion

The PGA used for the purpose of the site-independent design of the seismic category I SSCs of the US-APWR standard plant is 0.3 g ground acceleration for the two horizontal directions and the vertical direction. The COL Applicant is to confirm that the site-specific PGA at the basemat level control point of the CSDRS is less than or equal to 0.3 g.

Design Ground Motion Response Spectra

Horizontal and vertical response spectra define the design seismic ground motion used for the US-APWR standard plant seismic design. The SSE, OBE, and the spectra, which are used to characterize these earthquake motions, are discussed in the following paragraphs.

SSE

The SSE is the earthquake which produces the maximum vibratory ground motion for which certain SSCs are designed to remain functional and within applicable stress, strain, and deformation limits.

The SSCs that must remain functional are those necessary to assure the following:

(1) The integrity of the RCPB.

(2) The capability to shut down the reactor and maintain it in a safe-shutdown condition.

(3) The capability to prevent or mitigate the consequences of accidents which could result in potential offsite exposures comparable to the guideline exposures of 10 CFR 100 (Reference 3.7-4).

The CSDRS define the site-independent SSE used for the site-independent design of the US-APWR standard plant seismic category I and seismic category II SSCs. The major seismic category I buildings and structures of the US-APWR standard plant include the R/B, PCCV and containment internal structure, and the east and west PS/Bs.

For the design of seismic category I and seismic category II SSCs that are not part of the US-APWR standard plant, and for the detail design of the US-APWR standard plant structures that are modified for the site-specific condition which can affect their integrity, a site-dependent SSE that is derived from the site-specific GMRS can be used. Examples of seismic category I buildings and structures which are not part of the standard plant include the essential service water pipe tunnel (ESWPT), the power source fuel storage vaults (PSFSVs), and the ultimate heat sink related structures (UHSRS).

CSDRS

The CSDRS are presented herein to be approved under 10 CFR 52, Subpart B (Reference 3.7-5) as the site-independent seismic design response spectra for an approved certified design of the US-APWR standard nuclear power plant. The CSDRS characterize the site-independent SSE design ground motion that is defined at a control point located at the bottom of each US-APWR standard plant building basemat.

The in-structure response spectra (ISRS), which are used to design the seismic category I and II SSCs contained within or mounted to the US-APWR standard plant seismic category I buildings and structures, are computed from the CSDRS using methodology and approaches discussed in Subsection 3.7.2.5.

The site-independent CSDRS that are employed for the seismic category I design of the US-APWR standard plant are shown for 0.5%, 2%, 5%, 7%, and 10% damping values in Figures 3.7.1-1 and 3.7.1-2 for the horizontal and vertical components, respectively. The CSDRS are derived from RG 1.60 (Reference 3.7-6) spectra by scaling the spectra contained in RG 1.60 from 1.0 g to 0.3 g zero period acceleration (ZPA) values, and by modifying the RG 1.60 control points to broaden the spectra in the higher frequency range. The RG 1.60 spectral values are based on deterministic values for western United States earthquakes. However, recent seismic research including recently published attenuation relations indicates that earthquakes in the central and eastern United States have more energy content in the higher frequency range than earthquakes in the western United States. Thus, the RG 1.60 (Reference 3.7-6) spectra control points have been modified by shifting the control points at 9 Hz and 33 Hz to 12 Hz and 50 Hz, respectively, for both the horizontal and the vertical spectra. Therefore, for the US-APWR CSDRS, the horizontal spectra control points are at 0.25, 2.5, 12, and 50 Hz and the vertical response spectra control points are at 0.25, 3.5, 12, and 50 Hz. The modified RG 1.60 (Reference 3.7-6) spectra used for the CSDRS are expected to envelope many sites in the central and eastern United States in order to maximize the applicability of the US-APWR standard plant design; however, it is anticipated that there are some site-specific instances, particularly on hard rock sites in high seismic areas, where high-frequency exceedances of the CSDRS may occur. In these cases, the COL Applicant is required to perform site-specific seismic analyses, including a soil-structure interaction (SSI) analysis which considers seismic wave transmission incoherence and analysis of the cumulative absolute velocity (CAV) of the seismic input motion, in order to determine if high-frequency exceedances of the CSDRS could be transmitted to SSCs in the plant superstructure with potentially damaging effects.

Consistent with RG 1.60 (Reference 3.7-6), the CSDRS representing the vertical accelerations is obtained by scaling the horizontal acceleration response spectra (ARS) by a factor of 2/3 for frequencies less than 0.25 Hz. The scaling factor that varies from 2/3 to 1.0 is applied for the frequency range between 0.25 and 3.5 Hz. The horizontal and vertical acceleration spectra are kept identical above frequency 3.5 Hz and, consequently, the vertical PGA is taken as the same as the horizontal PGA.

The US-APWR design response spectral accelerations for each of the spectral control points are presented in Tables 3.7.1-1 and 3.7.1-2. The US-APWR site-independent CSDRS as defined herein meet the requirements of 10 CFR 50, Appendix S(IV)(a)(1)(i) (Reference 3.7-7), which require that the horizontal component of the SSE ground motion in the free-field at the basemat level of the structures must be an appropriate response spectra with a PGA of at least 0.1 g.

Site-Specific GMRS

In accordance with NUREG-0800, SRP 2.5.2 (Reference 3.7-8), the site-specific GMRS define the site-specific SSE through a horizontal and vertical response spectra of the free-field motion that is specified either on the ground surface or at an outcrop (real or hypothetical) of the uppermost in-situ competent material that will exist after excavation. The competent material is defined as having a shear-wave velocity of 1,000 ft/s or greater. Free-field ground motion is defined as the seismic motion of the ground that is not influenced by the presence of any basemats and structures.

Site-specific GMRS are developed at a sufficient number of frequencies (at least 25) that adequately represent the local and regional seismic hazards using the site-specific geological, seismological, and geophysical input data. A probabilistic seismic hazard analysis is performed that is based either on the reference-probabilistic approach as outlined in RG 1.165 (Reference 3.7-2) or on the performance-based approach outlined in RG 1.208 (Reference 3.7-3). Horizontal GMRS are developed using a site amplification function obtained from site response analyses performed on site-specific soil profiles that include the layers of soil and rock over the generic rock defined as the rock with shear wave velocity exceeding 9,200 ft/s. The site-specific soil profiles account for the uncertainties and variations of the site soil and rock properties. If materials are present at the site in which the initial (small strain) shear velocity is less than 3,500 ft/s [which corresponds to rock material for the purpose of defining input motion in accordance with Section 1.2 of ASCE 4-98 (Reference 3.7-9)], the site response analysis has to address probable effects of non-linearity of the subgrade materials. Equivalent linear methodology can be utilized with soil stiffness and damping degradation curves that represent the stiffness and damping properties of the subgrade materials as a function of strain.

Vertical GMRS are developed by combining the horizontal GMRS and the most up-to-date vertical/horizontal response spectral ratios appropriate for the site obtained from the most up-to-date attenuation relationships.

FIRS

The site-specific GMRS serves as the basis for the development of FIRS that define the horizontal and vertical response spectra of the outcrop ground motion at the bottom elevation of the seismic category I and II basemats. Free-field outcrop spectra of site-specific horizontal ground motion are derived from the horizontal GMRS using site response analyses that consider only the wave propagation effects in materials that are below the control point elevation at the bottom of the basemat. The material present above the control point elevation can be excluded from the site response analysis.

Appendix S (IV)(a)(1)(i) of 10 CFR 50 (Reference 3.7-7) requires that the SSE ground motion in the free-field at the basemat level must be represented by an appropriate response spectra with a PGA of at least 0.1 g. This requirement is met on a site-specific basis by considering minimum horizontal response spectra that are tied to the shapes of the US-APWR CSDRS and anchored at 0.1g. Since the CSDRS are based on modified RG 1.60-spectra, this assures that there is sufficient energy content in the low-frequency range. The COL Applicant is to assure that the horizontal FIRS defining the site-specific SSE ground motion at the bottom of seismic category I or II basemats envelope the minimum response spectra required by 10 CFR 50, Appendix S (Reference 3.7-7), and the site-specific response spectra obtained from the response analysis. The same requirements apply to the vertical FIRS, which are developed from the horizontal FIRS by using vertical/horizontal response spectral ratios appropriate for the site.

The COL Applicant is to perform an analysis of the US-APWR standard plant seismic category I design to verify that the site-specific FIRS at the basemat level control point of the CSDRS are enveloped by the site-independent CSDRS. If the verification analysis proves the site-independent seismic design to be inadequate, a reanalysis of the affected SSCs is performed based on a site-specific SSE defined by the site-specific FIRS. In this case, the scoping re-design analysis may focus on affected SSCs rather

than a complete analysis of all SSCs. The scoping analysis may determine that the CSDRS (as defined at their basemat level control point) need to be adjusted or modified. One possible example would be if the site-specific FIRS exhibited a significant peak at a higher frequency than the peak of the CSDRS. In this case it might be impractical to broaden the peak of the CSDRS, and instead the seismic design could be modified based on a design for two separate spectra (the site-specific FIRS in addition to the standard plant CSDRS), subject to further review for adequacy as discussed in NUREG-0800, SRP 3.7.1 (Reference 3.7-10).

OBE

The OBE specifies the magnitude of ground motion that requires the shutdown of the plant operations. Appendix S of 10 CFR 50 (Reference 3.7-7) stipulates that the magnitude of an OBE can be adopted either as (A) 1/3 or less of the SSE; or (B) a value greater than 1/3 of the SSE. For Option A, the Applicant is not required to perform explicit response or design analyses. If Option B is chosen, an explicit analysis and design must be performed to demonstrate that all SSCs necessary for the continued operation without undue risk to the health and safety of the public will remain functional within applicable stress, strain, and deformation limits.

The COL Applicant is to set the value of the OBE that serves as the basis for defining the criteria for shutdown of the plant, according to the site-specific conditions. The site-specific seismic design does not have to consider OBE loads when Option A is maintained by setting the OBE spectra as enveloped by 1/3 of the site-specific FIRS and GMRS. Subsection 3.7.4 describes the criteria and the seismic instrumentation used to determine whether the OBE has been exceeded. By limiting the value of the OBE to 1/3 of the site-independent SSE, Option A is also maintained for the site-independent seismic design of the US-APWR standard plant, and no design analysis is required to address the OBE loads for the seismic category I SSCs that are designed using the site-independent SSE.

It is recognized that during the life of the plant, the site may be subjected to seismic excitations of lower levels than the SSE. This can have an effect of reducing the “life expectancy” of those items sensitive to fatigue (i.e., piping, electrical, and mechanical equipment). Earthquake cycles are considered in the fatigue evaluation of the ASME Code, Section III, Class 1, 2, and 3. Components and Core Support Structures (Reference 3.7-11) (when required by the ASME Code) are discussed further in Sections 3.9 and 3.12, and in Section 3.10 for qualification testing of equipment. For fatigue evaluations, based on the OBE defined as less than 1/3 of the SSE, the guidance for determining the number of earthquake cycles for use in fatigue calculations is the same as the guidance provided in the NRC staff requirements memorandum for Secretary of the Commission Letter (SECY)-93-087 (Reference 3.7-12) for piping systems. The number of earthquake cycles to consider is two SSE events with 10 maximum stress cycles per event. Alternatively, the number of fractional vibratory cycles equivalent to that of 20 full SSE vibratory cycles may be used (but with an amplitude not less than 1/3 of the maximum SSE amplitude) when derived in accordance with Institute of Electrical and Electronic Engineers (IEEE), Standard 344-2004, Appendix D (Reference 3.7-13).

Design Ground Motion Time History

One set of three statistically independent time histories of seismic motion is synthesized artificially for use as the input motion in the earthquake response analysis of the US-APWR standard plant including the R/B, PCCV, containment internal structure, and PS/Bs. The three time histories are developed to represent the ground motion for the three orthogonal earthquake components, two horizontal ("H1" and "H2") and vertical ("V") following the requirements and conditions set in Section II of SRP 3.7.1 (Reference 3.7-10) for the development of a single set of time histories Option 1, Approach 2.

The three orthogonal directions may be alternately referred to within Section 3.7 using the following different designations:

H1 = Direction 1 = NS = Plant north-south= Global X-axis

H2 = Direction 2 = EW = Plant east-west = Global Y-axis

V = Direction 3 = Vertical = UD = Up-Down = Global Z-axis

Approach 2 is utilized with the objective of generating artificial acceleration time histories whose response spectra achieve approximately mean based fits to the target CSDRS presented in Figures 3.7.1-1 and 3.7.1-2. The average ratio of the ARS calculated from the artificial time histories to the corresponding target CSDRS is kept only slightly greater than one. The spectral acceleration ratio is calculated frequency by frequency.

The artificial time histories plots for the ground accelerations, velocity, and displacements in three orthogonal directions ("H1," "H2," and "V") are shown in Figures 3.7.1-3, 3.7.1-4, and 3.7.1-5, respectively. The time history plots of the ground acceleration, velocity, and displacement are shown together to demonstrate their non-stationary process.

Figures 3.7.1-6, 3.7.1-7, and 3.7.1-8 show the ARS of the US-APWR artificial time histories for 5% damping for the three orthogonal directions H1, H2, and V, respectively. The plots of the CSDRS, which are based on the modified RG 1.60 (Reference 3.7-6) response spectra as described in Subsection 3.7.1.1, are also included in the figure to demonstrate that the ARS of the synthesized artificial time histories envelope those of the CSDRS for 5% damping values. The figures demonstrate that the artificial acceleration time histories do not have significant gaps in the Fourier amplitude spectra but are also not biased high with respect to the target CSDRS.

The three US-APWR artificial time histories are discussed further with respect to the requirements specified in NUREG-0800, SRP 3.7.1 (Reference 3.7-10) for Approach 2 in the following, steps (a) through (d):

(a) The US-APWR artificial time histories have a sufficiently small time increments (Δt =0.005 seconds) and a total duration of 22.09 second. The total duration of the artificial time histories is increased by zero packing (addition of values of zero acceleration at the end of the time history records for the purpose of performing discrete Fourier analysis). The time history data records have a Nyquist frequency of $N_f = 1/(2\Delta t)$ =100 Hz, and meet the NUREG-0800,

SRP 3.7.1 (Reference 3.7-10) requirement of a total duration of at least 20 seconds. The time increment of 0.005 sec is lower than the maximum time increment of 0.01 sec permitted by SRP 3.7.1. The Nyquist frequency value of 100 Hz is considered to be above the range of frequencies important for the design of the US-APWR plant that assures that the seismic analysis will capture the responses of SSCs in the high frequency range. This is particularly important for site-specific subgrade conditions where seismic category I structures are founded on a hard rock subgrade.

(b) The 5% damped ARS of the US-APWR artificial time histories, shown in Figures 3.7.1-6, 3.7.1-7, and 3.7.1-8, are computed at 275 frequency points that are divided in three ranges: (a) 75 frequency points are uniformly spaced over the log frequency scale from 0.25 Hz to 1 Hz, (b) 100 frequency points are uniformly spaced over the log frequency scale from 1 Hz to 10 Hz, and (c) 100 frequency points are uniformly spaced over the log frequency scale from 10 Hz to 100 Hz. Each of the three ARS obtained from the three artificial ground motion time histories are compared with the target response spectra at each frequency computed in the frequency range of 0.25 Hz to 100 Hz.

(c) The 5% damped ARS computed for each of the three US-APWR artificial time histories does not fall more than 10% below the corresponding CSDRS target response spectra at any particular frequency. In addition, within a frequency window no larger than ±10% centered at any frequency data point, none of the three ARS (H1, H2, and V) falls below their corresponding target CSDRS. Some minor exceptions are noted and discussed below. Consistent with SRP 3.7.1 (Reference 3.7-10), this has been confirmed by assuring that, for the spectra derived from the artificial time histories, no more than nine frequency points adjacent to any one particular frequency point fall below the CSDRS target response spectra for any particular frequency being considered. This prevents the response spectra resulting from the artificial time histories from falling below the respective target response spectra in large frequency windows. Table 3.7.1-4 demonstrates that these requirements are met by showing a summary of the frequency non-exceedances.

For the H1 direction, there is a series totaling 10 consecutive data points (1 frequency data point + 9 adjacent points) centered at about 0.55 Hz that fall below the 100% value of the target spectra, however all data points in this particular window have values that are at least 98% of the target spectra and the window is no greater than ±10% of 0.55 Hz. Also, at 0.36 Hz, there is one data point that has a value which is 89.4% of the target spectra. For the H2 direction, there is a series totaling 10 consecutive data points centered at about 0.38 Hz that fall below the 100% value of the CSDRS, however, all data points in this particular window have values that are at least 90% of the target spectra except for one data point that is 88.8% of the target value, and the window is no greater than ±10% of 0.38 Hz. For the V (vertical) direction, there is a series totaling 5 consecutive data points centered at about 0.54 Hz that fall below the 100% value of the target spectra, however, all data points in this particular window have values that are at least 91% of the target spectra except for one data point that is 87.7% of the target value, and the window is no greater than ±10% of 0.54 Hz. All these non-exceedances are considered acceptable and consistent with the intent of SRP 3.7.1 (Reference 3.7-10), since they do not exceed a frequency window of ±10% centered on any particular frequency,

there is not more than one data point in any particular window that is below 90% of the CSDRS, and the lowest value for any particular data point is 87.7%, which is a very minor non-exceedance. These non-exceedances also occur at very low frequencies that are not significant for the design of US-APWR standard plant SSCs. These non-exceedances would need to be considered if the CSDRS were used to design site-specific buried piping or similar buried SSCs.

(d) In lieu of the power spectral density requirement of Approach 1 in NUREG-0800, SRP 3.7.1 (Reference 3.7-10), Approach 2 specifies that the computed 5% damped response spectra of each artificial ground motion time history does not exceed its target response spectra at any frequency by more than 30% (a factor of 1.3) in the frequency range of interest. For the US-APWR, the response spectra derived from the artificial time histories are checked to assure that they do not exceed the corresponding target spectra (CSDRS) by more than 30% at any frequency range measured as described in item (b) above. The results of this check are presented in Table 3.7.1-4.

The cross-correlation coefficients between the three components of the design time histories are as follows:

$$\rho_{12} = -0.0729,\ \rho_{23} = -0.0614,\ \text{and}\ \rho_{31} = -0.1289$$

where 1, 2, and 3 are the three global directions corresponding to north-south, east-west, and vertical directions for the US-APWR standard plant.

Since the absolute values of the cross-correlation coefficients of the US-APWR artificial time histories are less than 0.16, as demonstrated above, in accordance with NUREG/CR-6728 (Reference 3.7-14), the time histories are considered statistically independent of each other.

Duration of Motion

Each time history of the set of three statistically independent time histories which are developed for design of the US-APWR seismic category I buildings has a strong duration of motion of 8.91 seconds and a total duration of motion of 22.09 seconds. The strong duration of motion meets the acceptance criterion of 6 seconds minimum for strong motion duration as given in SRP 3.7.1 (Reference 3.7-10) for design time histories. The duration of motion has been determined using random phase characteristics. The total duration of motion meets the acceptance criterion of 20 seconds minimum as given in SRP 3.7.1 (Reference 3.7-10) design time histories, Option 1, Approach 2 Part (a).

For the linear structural analyses, which are based on the synthesized time histories and used to design US-APWR seismic category I buildings and structures, the total duration of the artificial ground motion time histories has been demonstrated to be long enough such that adequate representation of the Fourier components at low frequency is included in the time history.

The corresponding stationary phase strong-motion duration is consistent with the longest duration of strong motion from the earthquakes defined in SRP 2.5.2 (Reference 3.7-8) at low and high frequency and as presented in NUREG/CR-6728 (Reference 3.7-14).

The strong motion duration is defined as the time required for the Arias Intensity to rise from 5% to 75% in accordance with SRP 3.7.1 (Reference 3.7-10). The uniformity of the growth of this Arias Intensity has been examined and is acceptable. The duration of motion of the US-APWR artificial time histories with respect to the time duration needed to achieve 5% and 75% Arias intensities is summarized in Table 3.7.1-5.

The COL Applicant is to verify that the site-specific ratios V/A and AD/V^2 (A, V, D, are PGA, ground velocity, and ground displacement, respectively) are consistent with characteristic values for the magnitude and distance of the appropriate controlling events defining the site-specific uniform hazard response spectra. These parameters are examined to assure that they are consistent with the values determined for the low and high frequency events described in Appendix D of RG 1.208 (Reference 3.7-3).

The COL Applicant is to provide site-specific design ground motion time histories and durations of motion.

3.7.1.2 Percentage of Critical Damping Values

Damping coefficient values representing percentages of critical damping are assigned to the linear-elastic models to quantify the dissipation energy in the dynamic system. Table 3.7.3-1(a) presents the values of damping coefficients used for the SSE seismic analysis of seismic category I and II systems and subsystems. The specified damping coefficients are in accordance with RG 1.61 (Reference 3.7-15), ASCE 4-98 (Reference 3.7-9), and are based on consideration of the material, load conditions, and type of construction used in the structural system.

The values of the SSE damping coefficients specified in Table 3.7.3-1(a) are based on the expectation that the response of the linear elastic structure attributed to load combinations that include the SSE is close to applicable stress limits. This is considered acceptable for the US-APWR standard plant seismic design where, as described in RG 1.61 (Reference 3.7-15) Section 1.2, the design-basis ISRS represent the envelope of the in-structure responses obtained from multiple analyses conducted to consider a range of expected site soil conditions. However, this does not apply for the site-specific seismic analysis that use site-specific site properties since it is possible that the predicted structural response to the load combinations that include an SSE is significantly below the stress limits. In these cases, the SSE values in Table 3.7.3-1(a) may overestimate the actual dissipation of energy in the linear dynamic system and, thus, result in a non-conservative estimate of the structural response for frequencies close to the resonant frequencies. To prevent non-conservative results, the COL Applicant is to review the resulting level of seismic response and determine appropriate damping values for the site-specific calculations of ISRS that serve as input for the seismic analysis of seismic category I and seismic category II subsystems. In accordance with Section 1.2 of RG 1.61 (Reference 3.7-15), no verifications of seismic response are required if the lower damping values listed in Table 3.7.3-1(b) are used as input for computation of ISRS. In accordance with RG 1.61 (Reference 3.7-15), the damping values in Table 3.7.3-1(b) are also intended for use in site-specific OBE analyses, if the site-specific OBE is higher than 1/3 of the site-specific SSE.

The damping values in Table 3.7.3-1(a) and Table 3.7.3-1(b) are applicable to all modes of vibration of a structure constructed of the same material.

The damping values for systems that include two or more substructures, such as a concrete and steel composite structure, can be obtained using the strain energy method. The strain energy dependent modal damping values are computed based on Reference 3.7-18, which is the same as the stiffness weighted composite modal damping method, and acceptable to SRP 3.7.2 (Reference 3.7-16).

The stiffness weighted modal damping ratio h_i of the jth mode is obtained from the following equation:

$$h_j = \frac{\vec{\phi}_j^{\,T}\left[\overline{K}\right]\vec{\phi}_j}{\vec{\phi}_j^{\,T}\left[K\right]\vec{\phi}_j}$$

where

$[K]$ = the stiffness matrix of the combined soil-structure system

$\vec{\phi}_j$ = the jth normalized mode shape vector

$\left[\overline{K}\right] = \sum [k_i] \cdot \xi_i$ = the modified stiffness matrix constructed from the products of the element stiffness matrices $[k_i]$ and the applicable damping ratio ξ_i

Formulation of damping values for the seismic analysis models which incorporate the combined soil-structure damping is discussed in Subsection 3.7.2.1. Damping values associated with SSI analyses are addressed in Subsection 3.7.2.4.

3.7.1.3 Supporting Media for Seismic Category I Structures

A range of soil parameters of the basemat supporting media are considered in the seismic design of seismic category I building structures for the US-APWR standard plant. The overall basemat dimensions, basemat embedment depths, and maximum height of the US-APWR R/B, PCCV, and containment internal structure on their common basemat are given in Table 3.7.1-3 and as updated by the COL Applicant to include site-specific seismic category I structures.

The required allowable static bearing capacity for seismic category I building structure basemats, including the R/B-PCCV-containment internal structure on their common basemat, is 15 ksf. The dynamic bearing loads for seismic category I structure basemats are dependent upon the magnitude of the seismic loads that can be obtained from a site-specific seismic analysis that considers FIRS. The COL Applicant is to determine the allowable dynamic bearing capacity based on site conditions, and to evaluate the bearing load to this capacity. A minimum factor of safety of 2 is suggested for the ultimate bearing capacity versus the allowable dynamic bearing capacity; however, a different value may be justified based on site-specific geotechnical conditions.

The site-independent seismic design of seismic category I and seismic category II SSCs uses lumped parameter representation to model the interaction of seismic category I structures with the supporting media. The lumped parameter model considers a rigid basemat resting on the surface of a uniform elastic-half-space. Six sets of two parameters, one for stiffness and one for damping, are developed in accordance with Subsection 3.3.4.2 of ASCE 4-98 (Reference 3.7-9) to represent the properties of the

SSI in each one of the six degrees of freedom (DOFs) that describe the three-dimensional vibrations of the rigid basemat. The material properties of the soil used as input for the development of the lumped interaction parameters are the soil shear wave velocity, Poisson's ratio, and density. Since site-specific conditions (such as the material properties, depth, and the layering of the soil over the bedrock) are not known at the time of the site-independent analyses of the standard plant, a set of generic material properties is assigned to the uniform elastic half-space modeling the subgrade in order to simulate a wide range of possible supporting media conditions.

The site-specific SSI analyses will use site-dependent input control motion that is derived from GMRS and FIRS discussed in Subsection 3.7.1.1. The primary non-linear material behavior of the soil must be considered and may be approximated by using equivalent linear material properties that are compatible to the free-field strains generated by the site-specific design ground motion. If the earthquake-induced strains in the soil remain below 2%, the strain-compatible soil properties are obtained from a 1-dimensional wave propagation analysis by using equivalent-linear methodology and site-specific soil stiffness and damping degradation curves. The site-specific SSI analyses of the R/B–PCCV-containment internal structure on their common basemat uses the finite element (FE) analysis program SASSI Version 2.2 (Reference 3.7-17) that provides a frequency domain solution of the SSI model response by using a sub-structuring technique and, when applicable, is capable of addressing site-specific effects such as the layering of the soil, embedment and flexibility of the basemat, scattering, and incoherence of the input control motion. Based on successful comparison of ISRS derived from the CSDRS to those derived from site-specific SASSI analysis, other standard plant structures designed using lumped parameter models with lumped SSI parameters subject to the CSDRS can be validated by direct comparison to demonstrate their site-specific FIRS are enveloped. A SASSI analysis can be performed to consider incoherency to reduce high frequency response.

The lumped parameter model and the input soil properties used for the site-independent SSI analysis of the US-APWR standard plant, as well as the suggested methodologies for analyzing the effect of site-specific conditions on SSI response, are discussed further in Subsection 3.7.2.4.

3.7.2 Seismic System Analysis

Seismic system analysis is discussed in the following Subsections, 3.7.2.1 through 3.7.2.15. Following the guidance of the acceptance criteria section II.3(a) of SRP 3.7.2 (Reference 3.7-16), two categories of seismic category I SSCs are defined: (1) seismic systems that include major seismic category I buildings and structures that are analyzed in conjunction with their basemats and supporting media (subgrade); and (2) seismic subsystems that include other seismic category I SSCs that are not analyzed in conjunction with basemats and subgrade. This subsection discusses the following major seismic category I and II buildings and structures that are classified as seismic systems requiring SSI analysis:

- R/B–PCCV-containment internal structure on their common basemat (seismic category I)
- East and west PS/Bs (seismic category I)
- A/B (seismic category II)

- T/B (seismic category II)

The seismic response of the major seismic category I and seismic category II structures is obtained from time history analysis of lumped mass stick models with frequency independent lumped parameters constants representing the stiffness and damping properties of the SSI. Subsections 3.7.2.1 and 3.7.2.3, respectively, describe the analysis and modeling methods used for the seismic analyses, and Subsection 3.7.2.2 discusses the natural frequencies and results obtained from the seismic analyses. The results from the seismic analyses serve as the basis for the development of equivalent static seismic loads that are applied in conjunction with other design loads on the detailed three-dimensional shell FE model in order to obtain the design stresses in the structural members and components.

The overall process can be summarized as follows:

- A set of time history analyses are performed on the lumped mass stick model with SSI lumped parameters constants representing different subgrade conditions, where the time histories are applied to the model separately for each direction. The responses in each orthogonal direction (north-south, east-west, and vertical) obtained from the time history analyses with different subgrade conditions are enveloped.
- The results of the time history analyses for the response accelerations are used to develop ISRS that define the input seismic loads for analysis and design of seismic category I and II subsystems housed within or mounted to the major seismic category I structures. The ARS are calculated for the response of the lumped mass stick model at representative locations. The envelope of the response accelerations due to the three components of the earthquake are combined using square root sum of the squares (SRSS) and broadened to develop ISRS as discussed further in Subsection 3.7.2.5. The development of ISRS addresses the effects of parameter variations as described in Subsection 3.7.2.9.
- The results of maximum member forces obtained from the time history analyses serve as the basis for development of equivalent static seismic loads for design of the structural members of major seismic category I and seismic category II buildings and structures. Diagrams of maximum shear and axial force are developed from the results of each time history analysis for the response in each orthogonal direction. Equivalent shear and axial forces are computed for each lumped mass node starting from the top nodes and progressing down to the base of the stick models.
- A set of nine acceleration values is developed for each floor elevation representing the response in each orthogonal direction due to each of the three components of the earthquake motion. After being corrected to consider accidental torsion, as described in Subsection 3.7.2.11, these are applied to the detailed FE model to perform static analysis. The resulting loads (combined using Newmark 100%-40%-40% or SRSS method) are included in the loads and load combinations discussed in Section 3.8 and used to design structural members and components, as described in Section 3.8.

Discussed in Subsection 3.7.3 are the seismic analyses applicable to seismic category I civil structure subsystems housed within or supported by the major seismic category I structures. Seismic and dynamic qualification of mechanical and electrical equipment and subsystems performed by testing is discussed in Section 3.10 and Appendix 3D. Mechanical subsystems include mechanical equipment, piping, vessels, tanks, heat exchangers, valves, and instrumentation tubing and tubing supports. The seismic analysis of mechanical subsystems is addressed in Sections 3.9 and 3.12. The mass inertia properties of the major civil structural, mechanical, and all other seismic subsystems are accounted for in the seismic system analyses, as explained further in Subsection 3.7.2.3.

3.7.2.1 Seismic Analysis Methods

The methods used for the seismic analysis of the US-APWR seismic category I systems conform to the requirements of SRP Subsections 3.7.1 (Reference 3.7-10) and 3.7.2 (Reference 3.7-16) and generally to the analysis requirements of Section 3.2 of ASCE 4-98 (Reference 3.7-9). Table 3.7.2-1, as updated by the COL Applicant to include site-specific seismic category I structures, presents a summary of dynamic analysis and combination techniques including types of models and computer programs used, seismic analysis methods, and method of combination for the three directional components for the seismic analysis of the US-APWR standard plant seismic category I buildings and structures.

The seismic response of the major seismic category I and seismic category II structures of the US-APWR is obtained from site-independent analyses that use the direct integration time history method. Three-dimensional lumped mass stick models are used to represent the mass inertia, stiffness, and damping properties of the buildings, structures, and basemats. The stiffness and damping properties of the subgrade are modeled using the lumped parameter approach developed in accordance with Subsection 3.3.4.2 of ASCE 4-98 (Reference 3.7-9). The case when the seismic category I system is founded on hard rock is also considered by using stick models fixed at the base. The analyses of all of the systems are performed for three orthogonal (two horizontal and one vertical) components of site-independent design earthquake ground motion.

The response of a multi-DOF linear system subjected to seismic excitation is generally represented by the following differential equation of motion:

$$[M]\,\ddot{\vec{x}} + [C]\,\dot{\vec{x}} + [K]\,\vec{x} = [M]\,\vec{u}_b\,\ddot{u}_g \qquad \text{(Eq. 3.7.2-1)}$$

where

$[M]$ = the (nxn) mass matrix of the dynamic system

$[C]$ = the (nxn) damping matrix of the dynamic system

$[K]$ = the (nxn) stiffness matrix of the dynamic system

$\vec{x}$ = the (nx1) column vector of relative displacements

$\dot{\vec{x}}$ = the (nx1) column vector of relative velocities

$\ddot{\vec{x}}$ = the (nx1) column vector of relative accelerations

$\vec{u}_b$ = the (nx1) influence vector; displacement vector of the structural system when the support undergoes a unit displacement in the direction of the earthquake motion

n = the number of dynamic DOF

$\ddot{u}_g$ = the ground acceleration

The mass matrix [*M*] of the lumped mass stick model is diagonal. The size "*n*" of the matrices in the equation of motion (Equation 3.7.2-1) is equal to the total number of translational and rotational DOF with assigned mass inertia. If the six DOF assigned to the soil lumped SSI parameters are denoted with the suffix "*c*" and the rest of the DOF representing the response of the superstructure are denoted with suffix "*s*," the stiffness and damping matrices ([*K*] and [*C*]) of the system can be expressed as follows:

$$[K]=\begin{bmatrix}[K_{ss}] & [K_{sc}]\\ [K_{cs}] & [K_{cc}]+[K_c]\end{bmatrix}=\begin{bmatrix}[K_{ss}] & [K_{sc}]\\ [K_{cs}] & [K_{cc}]\end{bmatrix}+\begin{bmatrix}0 & 0\\ 0 & [K_c]\end{bmatrix}$$

(Eq. 3.7.2-2)

$$[C]=\begin{bmatrix}[C_{ss}] & [C_{sc}]\\ [C_{cs}] & [C_{cc}]+[C_c]\end{bmatrix}=\begin{bmatrix}[C_{ss}] & [C_{sc}]\\ [C_{cs}] & [C_{cc}]\end{bmatrix}+\begin{bmatrix}0 & 0\\ 0 & [C_c]\end{bmatrix}$$

where $[K_S]=\begin{bmatrix}[K_{ss}] & [K_{sc}]\\ [K_{cs}] & [K_{cc}]\end{bmatrix}$ and $[C_S]=\begin{bmatrix}[C_{ss}] & [C_{sc}]\\ [C_{cs}] & [C_{cc}]\end{bmatrix}$

are the (*n*x*n*) matrices representing the structural stiffness and damping; and [K_C] and [C_C] are the (6x6) diagonal matrices assigning the stiffness and damping lumped SSI parameters to the corresponding DOF.

The structural damping matrix [C_S] in global coordinates is derived from the modal damping ratios by following matrix transformation:

$$[C_S]_i=\left[\vec{\phi}^T\right]^{-1}\begin{bmatrix}\ddots & 0 & 0\\ 0 & 2h_i\omega_i & 0\\ 0 & 0 & \ddots\end{bmatrix}\left[\vec{\phi}\right]^{-1} \qquad \text{(Eq. 3.7.2-3)}$$

where

h_i = the stiffness weighted modal damping ratio of the ith mode,

ω_i = the natural frequency of vibration (Eigen value) of ith mode (rad/sec),

$\left[\vec{\phi}\right]$ = the mode shape matrix (Eigen vector matrix) normalized with respect to the mass matrix of the combined soil-structure system as follows:

$$\left[\vec{\phi}\right]^T \cdot [M] \cdot \left[\vec{\phi}\right] = [I] \quad \text{(where } [I] \text{ is an identity matrix)}$$

The natural frequencies and the normalized mode shape matrix are obtained from the modal analysis of the combined soil-structure system.

The stiffness weighted modal damping ratio h_i of the jth mode is obtained from the following equation:

$$h_j = \frac{\vec{\phi}_j^{\,T}\left[\overline{K}\right]\vec{\phi}_j}{\vec{\phi}_j^{\,T}[K]\vec{\phi}_j} \qquad \text{(Eq. 3.7.2-4)}$$

where

$[K]$ = the stiffness matrix of the combined soil-structure system composed as shown in Equation (3.7.2-2)

$\vec{\phi}_j$ = the jth normalized mode shape vector

$\left[\overline{K}\right] = \sum [k_i] \cdot \xi_i$ = the modified stiffness matrix constructed from the products of the element stiffness matrices $[k_i]$ and the applicable damping ratio ξ_i. To be noted is that the damping ratio for the soil spring is set to zero, which means no material damping is assumed by the soil.

The stiffness matrix [K_C] and the damping matrix [C_C], representing the dynamic properties of the subgrade, are constructed from the lumped SSI parameters. The lumped SSI parameters are calculated from the formulas given in ASCE 4-98, Subsection 3.3.4 (Reference 3.7-9) that are based on closed form solutions for vibrations of a rigid basemat resting on elastic-half space. The values of the lumped parameters for damping in the horizontal direction are conservatively reduced to 60% of the values calculated from the formulas of ASCE 4-98 (Reference 3.7-9) unless an applicable justification based on site-specific conditions is applied.

The damping matrix of the combined soil-structure dynamic system [C] is non-proportional to the stiffness and the mass inertia of the dynamic system and as such prevents the decoupling of the differential equations of motion (Equation 3.7.2-1) into generalized coordinates. Therefore, the solution for the dynamic response of the soil-structure system is obtained from a time domain analysis that uses a direct integration method. The implicit integration technique is adopted based on Newmark β method (β=0.25, γ=0.5). The time step of integration (Δt) is set to 0.001 sec, which is verified to be small enough such that the use of 1/2Δt time step does not change the value of calculated response by more than 10%.

The above-described method utilizing direct integration for time history analysis is used for the analysis of the R/B-PCCV-containment internal structure on their common basemat. As an alternative option for seismic category I systems and subsystems, it is also acceptable to utilize the composite modal damping method associated with the modal superposition of time history analysis when the equations of motion can be decoupled, as discussed in Subsection 3.2.2.2 of ASCE 4-98 (Reference 3.7-9).

Analyses of seismic category I and II subsystems are primarily performed using equivalent static load analysis or modal response spectra analysis. The input seismic loads are defined by ISRS that are obtained from the time history analyses of the major seismic category I buildings and structures. Seismic subsystems are discussed in Subsection 3.7.3, and the modal response spectra and equivalent static load analysis methods are discussed in Subsection 3.7.3.1.

Seismic anchor motions are taken into consideration for all seismic analysis methods used in the design of seismic category I and seismic category II SSCs. All analysis approaches have been based on linear elastic analysis of SSCs, with allowable stresses within the elastic limits for seismic loads and load combinations as delineated in Section 3.8. Except in limited cases where permitted by code, inelastic behavior is not considered for seismic loads and load combinations in performing the plant design, however, limited inelastic and nonlinear behavior for seismic loading conditions may be used for site-specific COL designs, future operability analyses or as-built evaluations, as permitted in SRP 3.7.2 (Reference 3.7-16). Nonlinear and inelastic behavior is considered for certain loads and load combinations involving impact and impulsive loading, as discussed in Subsection 3.8.4.

3.7.2.2 Natural Frequencies and Responses

As discussed further below in Subsection 3.7.2.3, the seismic analysis and design of the R/B, PCCV, and containment internal structure and their common basemat are based on a coupled model that consists of detailed RCL lumped mass stick model coupled with a combined R/B-PCCV-containment internal structure lumped mass stick model. The seismic analysis of the RCL-R/B-PCCV-containment internal structure coupled model is the subject of a Technical Report (Reference 3.7-18). The results obtained from the seismic analysis of the coupled model are presented in the report and reconciled, as necessary, with those results obtained from the current seismic analysis.

The current seismic analysis and design of the R/B, PCCV, and containment internal structure and their common basemat are based on a combined lumped mass stick model consisting of three lumped mass stick models (for each of the three structures) that are all rigidly cross-connected at the surface of the common basemat, as discussed further below in Subsection 3.7.2.3. The natural frequencies and modal responses for the combined R/B-PCCV-containment internal structure model (which includes the masses of the RCL system but is not coupled with the RCL lumped mass stick model) are presented in Appendix 3H.

It should be noted that the results obtained from the seismic analysis of the lumped mass stick models are obtained considering the potential effects of SSI. The site-independent SSI analyses, which are discussed further in Subsection 3.7.2.4, consider four generic subgrade conditions: (1) soft soil with shear wave velocity V_s = 1,000 ft/s, (2) rock (medium 1) with V_s = 3,500 ft/s, (3) rock (medium 2) with V_s = 6,500 ft/s, and (4) hard rock with V_s = 8,000 ft/s (fixed base condition is assumed). For each one of the subgrade conditions considered, analyses are performed where each one of the three components of the earthquake H1, H2 and V that are described in Subsection 3.7.1.1, are applied separately to the model in the standard plant N-S, E-W and vertical direction, respectively.

Subsection 3.7.2.5 discusses development of ISRS based on the results of the site-independent seismic analyses for the US-APWR standard plant.

3.7.2.3 Procedures Used for Analytical Modeling

3.7.2.3.1 General Discussion of Analytical Models

The procedures used for analytical modeling of the major standard plant seismic category I and seismic category II structures are discussed herein.

The procedures used for development of analytical models for seismic analysis are consistent with the procedures and guidelines of Chapter 3 of ASCE 4-98 (Reference 3.7-9) and SRP 3.7.2, Section II.3 (Reference 3.7-16). Structural element mass and stiffness characteristics, as well as load and tributary masses, and damping characteristics, are incorporated into the models.

The models used for seismic analysis are developed by discretization of the mass inertia and stiffness properties of the dynamic system, such that the mass inertia of the system is lumped at distinct characteristic nodes, which are interconnected by a network of stiffness elements. The mass is lumped in selected nodes in a way that provides an adequate representation of the mass distribution considering the high-stress concentration points of the system. In general, lumped mass inertia is assigned at the selected locations in all six DOF corresponding to translations along three orthogonal axes, and rotations about these axes. The number of DOF should be reduced by the number of constraints, where applicable.

When the subsystem analysis is performed, reduced DOFs can be used to represent the dynamic behavior at locations needed for equipment qualification, provided that they can provide an adequate and conservative prediction of the response of the equipment.

The seismic analyses of the US-APWR standard plant are performed on three-dimensional lumped mass stick models representing the major seismic category I and seismic category II structures. The basic dimensions of these buildings and structures as considered in the seismic analyses are presented in the general arrangement drawings in Section 1.2. The models consider all six DOF (three rotational and three translational) and incorporate mass and stiffness eccentricities to assure that torsional and rocking/swaying effects, and any cross-directional coupling, are captured. Torsional and rocking/swaying effects are also captured at the basemat/subgrade interface through the use of lumped SSI parameters for all six DOF. The frequency independent lumped parameter formulation and methodology for calculation of lumped stiffness and damping coefficients is addressed in detail in the SSI analysis discussion in Subsection 3.7.2.4.

It is the responsibility of the COL Applicant to develop analytical models appropriate for the seismic analysis of buildings and structures that are designed on a site-specific basis including, but not limited to, the following:

- PSFSVs (seismic category I)
- ESWPT (seismic category I)
- UHSRS (seismic category I)

Since there will not be any seismic category I SSCs contained within seismic category II buildings, the development of ISRS is not necessary.

Using the computer program NASTRAN (Reference 3.7-20), detailed FE models are developed for the major seismic category I and seismic category II structures, primarily to be utilized as static analysis models for structural design based on loads and load combinations as described in Section 3.8. However, the NASTRAN FE models are also used for validation of the dynamic lumped mass stick models and the seismic analysis results, as discussed later in this section. Final results obtained from analysis of the NASTRAN FE models are validated by comparison to the results of separate ANSYS (Reference 3.7-21) FE model analyses.

3.7.2.3.2 R/B, PCCV, and Containment Internal Structure Lumped Mass Stick Models

The seismic analysis and design of the R/B, PCCV, and containment internal structure and their common basemat are based on a model that consists of a detailed RCL system lumped mass stick model coupled with a combined R/B-PCCV-containment internal structure lumped mass stick model. The seismic analysis of the RCL-R/B-PCCV-containment internal structure coupled model is addressed in a separate Technical Report (Reference 3.7-18). The results obtained from the seismic analysis of the RCL-R/B-PCCV-containment internal structure coupled model are compared to the current seismic analysis of the R/B, PCCV, and containment internal structure and their common basemat and design adjustments due to the reconciliation are made, as necessary, and addressed in the Technical Report.

The current seismic analysis and design of the R/B, PCCV, and containment internal structure and their common basemat is based on a combined lumped mass stick model consisting of three lumped mass stick models (for each of the three structures) that are all rigidly cross-connected at the surface of the common basemat. Included in this combined model is the calculated mass of the RCL seismic subsystem, which is conservatively rounded up by 20% and distributed proportionately to the appropriate model nodes based on the mass distribution of the RCL system. This is considered a conservative approach for the seismic analysis and design of the R/B, PCCV, and containment internal structure and their basemat because the round-up compensates for uncertainties in the mass distribution and potential effects due to coupling of the RCL subsystem, such as shifts or changes in natural frequency and response modes. Appendix 3H presents the detailed model descriptions, seismic analysis results, and the associated tables and figures that are particular and specific to the uncoupled RCL approach currently used for the R/B, PCCV, and containment internal structure. Similarly, Appendix 3C presents the analytical methods and modeling approaches currently used for the uncoupled RCL seismic subsystem analysis.

Unless otherwise noted, the discussion hereinafter in Subsection 3.7.2 applies to both the uncoupled and coupled RCL seismic modeling and analysis approaches.

The lumped-mass stick models used for the seismic analysis of US-APWR R/B, PCCV, and containment internal structure and their basemat consider the eccentricities between the center of rigidity and the center of mass of structures. The models represent the actual locations of masses and centers of rigidity, thus, accounting for the torsional effects caused by the eccentricity. The modeling approach accounts for the differences

between the vertical and horizontal centers of rigidity by using two stick elements to model the stiffness of the structural members at each story. A truss element located at the vertical center of rigidity represents the vertical stiffness of the floor, and a beam element located at the shear center of rigidity represents the shear and bending stiffness of the floor. Both stick elements are rigidly connected to the common center of mass at each major floor elevation. This modeling approach helps eliminate the errors in computation of the seismic responses that are due to the rocking SSI effects caused by an inaccurate representation of the vertical center of rigidity. See Subsection 3.7.2.11 for discussion of accidental torsion.

To model the interaction of the basemat and the structures with the underlying subgrade, frequency-independent lumped parameters are established vertically at the bottom of the basemat, and horizontally at the center of the PCCV interface with the subgrade boundary. The lumped parameter coefficients representing the stiffness and the damping properties of the SSI, are developed in accordance with ASCE 4-98 (Reference 3.7-9), Table 3.3-3, as discussed in Subsection 3.7.2.4.

The structural elements of the R/B, which includes the fuel handling area, are concentrated and reduced to one set of stick models below the operating floor level. The part of the R/B above the operation floor level, except for the fuel handling area, is represented by several stick models that are interconnected by horizontal rigid links representing the floor diaphragm. The rigid links restrain only the in-plane translational displacements of the floor without affecting the deformations in the other DOF. The containment internal structure and the PCCV are modeled separately, and they are rigidly connected to the R/B stick model at the surface of the common basemat. The R/B, PCCV, and containment internal structure are all structurally separated from each other above their common basemat by expansion joints, which are discussed further in Subsection 3.7.2.8. Detailed descriptions of the R/B, PCCV, and containment internal structure and their common basemat are presented in Section 3.8, where the structural design of those buildings and structures is addressed.

A set of static and dynamic analyses is performed on the detailed three-dimensional FE model that is developed for computation of internal forces and stresses in the structural members and components of R/B-PCCV-containment internal structure subject to design loads and load combinations that are discussed further in Section 3.8. The FE model combines the R/B, PCCV, and containment internal structure on their common basemat. For clarity of presentation, the combined FE model is shown in Figures 3.7.2-1, 3.7.2-2, 3.7.2-3, and 3.7.2-4 as four separate isometric views showing the PCCV, containment internal structure, and R/B on the common basemat. The results from the static and dynamic analyses performed on the detailed FE model are used to validate the dynamic properties of the stick models as described in Subsection 3.7.2.3. The lumped mass stick models of R/B, PCCV, and containment internal structures are developed independently of the detailed FE model.

3.7.2.3.3 East and West PS/Bs Lumped Mass Stick Models

The lumped-mass stick models used for the seismic analysis of east and west PS/Bs consider the eccentricities between the center of rigidity and the center of mass of structures as described above for the R/B, PCCV, and containment internal structure and their common basemat.

To model the interaction of the basemat and the structures with the underlying subgrade, frequency-independent lumped parameters are established vertically at the bottom of the basemat, and horizontally at the center of basemat with the subgrade boundary. The lumped parameter coefficients representing the stiffness and the damping properties of the SSI, are developed in accordance with ASCE 4-98 (Reference 3.7-9), Table 3.3-3, as discussed in Subsection 3.7.2.4.

A set of static analyses are performed on the detailed three-dimensional FE model that is developed for computation of internal forces and stresses in the structural members and components of PS/Bs. Applicable design loads and load combinations are discussed further in Section 3.8.

3.7.2.3.4 Subsystem Coupling Requirements

For purposes of modeling the R/B-PCCV-containment internal structure on their common basemat, large seismic subsystems contained within these structures are evaluated against the mass and frequency ratio criteria given in SRP 3.7.2, Section II.3(b) (Reference 3.7-16), as follows:

- If R_m is less than 0.01, decoupling can be done for any R_f
- If 0.01 less than or equal to R_m and less than or equal to 0.1, decoupling can be done if 0.8 is greater than or equal to R_f and greater than or equal to 1.25
- If R_m is greater than 0.1, a subsystem model should be included in the primary system model

where

R_m = (total mass of supported subsystem)/(total mass of supporting system)

R_f = (fundamental frequency of supported system)/(dominant frequency of support motion)

If these criteria require the subsystem to be coupled with the primary seismic model, both the stiffness and the mass of the subsystem are included in the overall model to assure the accuracy of the calculated frequencies. This is the approach used for including the RCL seismic subsystem in the coupled RCL-R/B-PCCV-containment internal structure lumped mass stick model discussed in Subsection 3.7.2.3.

When it has been determined through investigation of the above criteria that a subsystem is not required to be coupled with the primary seismic model, then the subsystem is assumed absolutely rigid and only its mass is included at appropriate node points of the global seismic model. The PCCV polar crane and fuel handling crane are incorporated into the overall lumped mass stick model in this manner. In addition, the requirements of NOG-1 (Reference 3.7-22) for the design of cranes may require that the crane design analysis be performed by coupling the crane model with the overall building model. Therefore, it is the responsibility of the COL Applicant to confirm the masses and frequencies of the PCCV polar crane and fuel handling crane and to determine if coupled site-specific analyses are required. If found that is required, the site-specific seismic analysis of the US-APWR standard plant must be performed on

models that incorporate the PCCV polar crane and the fuel handling crane, as appropriate.

3.7.2.3.5 Section and Material Properties for Lumped Mass Stick Models

The values of the modulus of elasticity and Poisson's ratio (ν) for concrete and steel used in the lumped mass stick models are discussed below. The values are for materials at or near ambient temperatures.

(a) Concrete

The concrete modulus of elasticity E_c, and shear modulus G_c corresponding to the compressive strengths of normal weight concrete used in the R/B, PCCV, and containment internal structure and their common basemat are summarized in Table 3.7.2-2 and are computed as follows:

$$E_c \text{ (ksi)} = 57{,}000 \sqrt{f'_c}$$

$$G \text{ (ksi)} = E_c / 2\,(1 + \nu_c)$$

where

$f'_c =$ specified 28-day compressive strength of concrete (psi)

$\nu_c =$ 0.17 (Poisson's ratio for concrete)

(b) Steel

The properties of ferritic structural steel and non-prestressed reinforcement, E_s and ν_s are as follows:

E_s = 29,000 ksi and ν_s = 0.3

3.7.2.3.6 Masses

The inertial properties include all tributary mass expected to be present at the time of the earthquake. This mass includes the effects of dead load, stationary equipment, piping, and the appropriate part of the live and snow load (see Subsection 3.7.2.3 for further discussion of equivalent live load). The mass properties of stick model consist of the total weight W, the weight moment of inertia (J_{xx}, J_{yy}, J_{zz}), and the center of mass. They are in principle evaluated by hand calculation as described below.

3.7.2.3.6.1 Mass Points and Associated Weights (*W*)

The mass points are, in principle, established at the major floor levels represented by nodes in the lumped mass stick model.

Figure 3.7.2-5 depicts how the mass moments of inertia and weights associated with the lumped masses are computed.

In addition to the structural mass, mass equivalent to a floor load of 50 pounds per ft^2 is considered to represent miscellaneous dead weights such as minor equipment, piping, and raceways. The mass equivalent to 25% of the floor design live load and 75% of the

roof design snow load is also included. The mass of major equipment is considered to be distributed over a representative floor area or included as concentrated lumped masses at the equipment locations.

Vertical amplification effects on the masses of floor slab systems due to out-of-plane flexibility are addressed as part of a Technical Report on the Coupled Model (Reference 3.7-18).

3.7.2.3.6.2 Mass Moment of Inertia (J_{xx}, J_{yy}, J_{zz})

Mass moments of inertia are considered at all of the mass points for all three rotational DOF.

3.7.2.3.7 Shear Stiffness

The effect of in-plane shear deformation is included in the model. For the lumped mass stick model, effective shear area is computed from the sum of the component shear areas of the individual walls parallel to the direction of the applied force.

The stiffness of the stick model is evaluated by hand calculation as shown in Figure 3.7.2-6, which summarizes the approximate methods used to compute the section areas, geometrical moments of inertia, and axial areas for the PCCV and R/B structures, under the following assumptions:

- Walls continuously built up from the basemat, whose thickness is more than 40 in. are treated as seismic walls.
- Openings with area more than 2,880 in^2 (80 in. x 36 in.) are considered in evaluating the stiffness of walls as discussed in Subsection 3.7.2.3.

Generally, in accordance with ASCE-4 (Reference 3.7-9) Subsection C3.1.8.3, if the shear wall has no flange elements at its ends, the shear area is equal to the total web area divided by 1.2. If flanges are present, the shear area is equal to the total web area. The effective flange width of each perpendicular wall may be calculated using the following reduction due to shear lag effects:

$$W_e = \frac{H}{3} \leq \frac{W}{2}$$

where

W_e = effective flange width on each side of the wall

H = height of the wall

W = actual width of the flange on each side of the wall

The above guidance on shape factors and reductions to flange width to account for shear lag effects is adjusted where necessary for some shear walls based on detailed local analysis in order to assure that the overall lumped mass stick model contains accurate shear stiffness values. For example, for the containment internal structure the effective shear area of the stick elements is calculated by a FE model as follows:

(i) A FE model of the containment internal structure above the upper level of the basemat, considering the walls, columns and floor slabs, is developed using brick, shell and beam elements.

(ii) By fixing the containment internal structure where it intersects with the upper level of the basemat, a set of vertically distributed horizontal loads, which is established considering the earthquake excitation, is applied at each main floor level and the resulting horizontal displacements are evaluated at the top level of each floor. To determine which portion of the resulting displacement at each floor is attributable to shear stiffness and which portion is related to bending stiffness, another analytical model in which the vertical DOF is constrained is also prepared separately. The flexibility coefficients for the equivalent beam are evaluated from the results of these analyses.

(iii) The equivalent stiffness properties (the equivalent shear stiffness, bending stiffness, etc) are evaluated from (ii) above.

3.7.2.3.7.1 Effective Shear Area (A_x, A_y)

Two effective shear areas A_x and A_y are calculated for each floor by considering the seismic walls that are parallel to each two horizontal earthquake directions. For the walls having openings, an equivalent shear area (A_e) is considered that is calculated using the equal shear deformation methodology depicted in Figure 3.7.2-7. From the requirement that the shear deformation δ_s of the wall with openings be equal to the shear deformation δ'_s of a wall without openings with height equal the story height (H), the effective cross section area of the wall A_e is obtained from the following equation:

$$A_e = \frac{H}{\sum_{i=1}^{n} \frac{\kappa_i h_i}{A_i}} \qquad \text{(Eq. 3.7.2-5)}$$

where

A_i = the shear area

h_i = height of wall segment

κ_i = a shape factor

3.7.2.3.7.2 Bending Moment of Inertia (I_{yy}, I_{xx})

Bending moment of inertia of the shear walls are calculated around the horizontal axes established at the centroid of the floor shear walls area. The effective flange width of each perpendicular wall is calculated using the following reduction due to shear lag effects

$$W_e = \frac{H}{3} \leq \frac{W}{2}$$

where

W_e = effective flange width on each side of the wall

H = total height of the wall

W = actual width of the flange on each side of the wall

Equivalent moments of inertia (I_e) are calculated for the walls with openings using the equal bending rotation methodology as shown in Figure 3.7.2-7. The bending rotation θ of the wall with openings loaded with unit bending moment M is calculated as follows:

$$\theta = \int_0^{h_1} \frac{M}{EI_1} dh + \cdots + \int_{h_1+\cdots+h_{n-1}}^{h_1+\cdots+h_{n-1}+h_n} \frac{M}{EI_n} dh$$

where I_i and h_i are the moment of inertia and height of wall segment as shown in Figure 3.7.2-7. The bending rotation θ' of equivalent wall without openings with height equal the story height (H) and cross section with equivalent moment of inertia I_e is:

$$\theta' = \int_0^{H} \frac{M}{EI_e} dh = \frac{MH}{EI_e}$$

From the requirement that the bending rotation of the two walls to be equal ($\theta = \theta'$) the effective moment of inertia is obtained as follows:

$$I_e = \frac{H}{\sum_{i=1}^{n} \frac{h_i}{I_i}} \quad \text{(Eq. 3.7.2-6)}$$

3.7.2.3.8 Torsional Stiffness

The stick elements modeling the stiffness of the floor shear walls and columns are to be located at the center of rigidity of the floor, and an appropriate torsional stiffness must be assigned if the center of mass is not coincident with the center of rigidity. The torsional rigidity, K_p, can be computed from the following equations:

$$K_p = \sum_{i=1}^{N} \left(K_{yi} \overline{X}_i^2 + K_{xi} \overline{Y}_i^2 \right) - X_{cr}^2 \sum_{i=1}^{N} K_{yi} - Y_{cr}^2 \sum_{i=1}^{N} K_{xi} \quad \text{(Eq. 3.7.2-7)}$$

where

$\overline{X}_i, \overline{Y}_i =$ coordinated of ith wall or column elements

$K_{xi}, K_{yi} =$ stiffness of ith wall or column effective for shear, assuming rigid connection to the floor, in x and y directions, respectively

$X_{cr}, Y_{cr} =$ coordinates of center of rigidity

$$X_{cr} = \frac{\sum_{i=1}^{N}\left(\overline{X}_i K_{yi}\right)}{\sum_{i=1}^{N}\left(K_{yi}\right)}, \; Y_{cr} = \frac{\sum_{i=1}^{N}\left(\overline{Y}_i K_{yi}\right)}{\sum_{i=1}^{N}\left(K_{xi}\right)} \qquad \text{(Eq. 3.7.2-8)}$$

Alternatively, the torsional stiffness of the floor can be obtained from the FE analysis of the floor model, as described in Subsection 3.7.2.3. Multiple stick elements may be used to represent the stiffness of the floor by locating the stick stiffness elements at the centers of rigidity of the respective groups of structural members (shear walls or beams). The multiple floor stick stiffness elements must be properly interconnected among each other and with the node(s) where the mass inertia of the floor is lumped.

3.7.2.3.8.1 Torsional Constant (I_{zz})

Torsional constant of seismic shear walls is calculated around the vertical axis that goes through the center of the floor shear rigidity.

3.7.2.3.9 Axial Stiffness

Axial stiffness is calculated considering all walls that contribute to shear stiffness and from vertically acting supports such as columns.

3.7.2.3.9.1 Vertical Axial Area (A_a)

Vertical axial area of each element of the lumped mass stick model is equal to the summation of the effective shear areas for the two horizontal directions and axial area contributed by other vertically acting supports such as columns. However, overlapping areas such as the corner areas of box walls are subtracted from the summation.

The axial stiffness of the dome of PCCV is evaluated as follows:

(i) A FE model of PCCV as shown in Figure 3.7.2-8 is developed.

(ii) The static analysis is performed by applying to the FE model vertical loads with magnitude equivalent to the weight at the corresponding mass point weights at locations which correspond to the locations of the mass points in the stick model.

(iii) Vertical displacements are calculated from the static FE analysis and used to evaluate the effective vertical axial area as follows:

$$K_i = \frac{A_i E}{L_i} = \frac{\sum W_i}{\Delta_i - \Delta_{i-1}}$$

where

K_i = effective vertical axial stiffness of the element *i*

A_i = effective vertical axial area of the element *i*

L_i = length of the element *i*

W_i = weight of the mass i

Δ_i = vertical displacement of node i

E = Young's modulus of the concrete material

3.7.2.3.10 Validation of the Lumped Mass Stick Models

The seismic response of R/B and containment internal structure is obtained from the analyses of three-dimensional lumped-mass stick models whose stiffness and mass properties are evaluated by hand calculation as described in the previous section. As described herein, detailed FE mathematical models that are initially prepared for static design analysis of these structures are used to verify that the lumped mass stick models realistically represent the dynamic properties of the R/B and containment internal structure.

The lumped mass stick models are validated as follows:

- The static deformations results obtained from the analysis of the detailed FE models are compared to those obtained from the analysis of the stick models to verify that the models exhibit closely matching results.
- The 5% damping ISRS results obtained from the fixed base analysis of the stick model are compared to those obtained from the fixed base analysis of the detailed FE model for various locations within the structures. The results are considered acceptable if the stick model results envelope (or reasonably match in terms of peaks and amplitude) those of the FE model.

All computer programs used for modeling are also verified and validated as in accordance with ANSI/ASME NQA-1-2004 (Reference 3.7-23) requirements.

3.7.2.3.10.1 Validation Method

<u>Static Loading Analysis</u>

To verify whether the stick model has stiffness properties that conform to those of the FE model, a static loading analysis is performed as follows:

(i) A FE model consisting of the portion of the building above the upper level of the basemat, including the walls, columns, and floor slabs, is developed using brick, shell, and beam elements.

(ii) By fixing the upper level of the basemat, a set of vertically distributed horizontal loads, which is established considering the earthquake excitation, is applied at each of the main floor levels of the FE model and the resulting horizontal displacements are evaluated at the top level of each floor.

(iii) The same analysis as described above in (ii) is performed on the seismic stick model and the set of vertically distributed horizontal displacements from the stick model analysis is compared with that obtained from the analysis of the FE model.

(iv) If the difference of displacement distribution between the FE model and the seismic stick model is considered to be large, the stiffness properties of the stick

model are adjusted so that the difference between them becomes small, applying reasonable engineering judgment.

The adjustments to the stiffness properties of the stick model are as follows:

- The flange width of the seismic walls of NS direction under the operation floor level is reduced from H/3 to H/6 (H: total height of the wall).
- The flange widths of the seismic walls above the operation floor are not taken into account.
- The shape factor (=1.2) is taken into account for the seismic walls in the NS direction above the operation floor, except for the fuel handling area of the R/B.

Dynamic Analysis

To verify whether dynamic properties of the stick model conform to those of the detailed FE model, the 5% damping ISRS are calculated at several arbitrarily selected node points in the lumped mass stick model that represent main floor levels. The ISRS derived for those node points in the lumped-mass stick model are then compared with ISRS developed for the corresponding locations in the FE model.

3.7.2.3.10.2 R/B

i) Fixed-base FE model

Figure 3.7.2-9 shows the fixed-base FE model for the R/B, which is compared with the three-dimensional stick model. The response of the stick model is compared with that of the FE model to account for the effect of a spatially extended structure. The torsional and rocking motion is included in both models.

ii) Rigidity estimation by static analysis

Comparisons of static deformations are made between the three-dimensional stick model and the FE model, as previously discussed.

iii) Comparison of ISRS

Comparisons of ISRS are made between the three-dimensional stick model and the FE model at various points in various elevations, as previously discussed.

3.7.2.3.10.3 Containment Internal Structure

i) Fixed-base FE model

Figure 3.7.2-10 shows the fixed-base FE model for the containment internal structure, which is compared with the three-dimensional stick model. To verify the three-dimensional stick model, the FE model is used to estimate its rigidity by both static and dynamic analyses.

ii) Rigidity estimation by static analysis

Comparisons of static deformations are made between the three-dimensional stick model and the FE model, as previously discussed.

iii) Comparison of ISRS

Comparisons of ISRS are made between the three-dimensional stick model and the FE model at various points in various elevations as previously discussed.

3.7.2.3.11 Equivalent Masses due to Dead and Live Loads

In the design of seismic category I and seismic category II buildings and structures, dead loads and various portions of live loads are treated as equivalent masses for consideration in the global seismic analysis models. For example, 25% of the design floor live loads during normal operation (ASCE 7, Subsection 12.7.2 [Reference 3.7-24]) or 75% of the roof snow load, whichever is applicable depending on the specific location in the building or structure, have been considered in computing tributary mass at node points in the seismic models. This is consistent with SRP 3.7.2, Section II.3(d) (Reference 3.7-16). For the containment operating deck in the PCCV, the design floor live load for maintenance and refueling is 950 lb/ft^2 and the floor live load for normal operation is 200 lb/ft^2. Therefore, 50 lb/ft^2 (25% of 200 lb/ft^2) has been used as an equivalent live load (mass) for the seismic analysis models.

Equivalent dead loads used in the seismic analysis models also include the weight of SSCs not specifically identified or included as dead loads in the models such as the weight of minor piping systems, cables and cable trays, ducts, and all related supports. Similarly, equivalent live loads include fluid contained within the minor piping and equipment under operating conditions. The weight of permanently attached tanks (uniformly distributed over the room floor area) is included as equivalent dead load (mass) in the seismic models. For the seismic analysis models, an equivalent dead load of a minimum of 50 lb/ft^2 uniform load is applied to cover these conditions. This is consistent with SRP 3.7.2, Section II(3)(d) (Reference 3.7-16).

For floors with a significant number of small pieces of equipment (e.g., electrical cabinet rooms), their total weight divided by the floor area that effectively supports the equipment within the room, plus an additional 50 lb/ft^2, is used as the equivalent dead load.

The equivalent dead loads (mass) are appropriately increased in areas such as main piping corridors, and cable tray and HVAC ductwork runs where such loads exceed the value of 50 lb/ft^2.

3.7.2.4 Soil-Structure Interaction

In accordance with the requirements of SRP 3.7.2, Section II.4 (Reference 3.7-16), and following the standards specified by ASCE 4-98, Section 3.3 (Reference 3.7-9), SSI effects are considered in the seismic response analysis of all major seismic category I and seismic category II buildings and structures that are part of the US-APWR standard and non-standard plant. The SSI analyses use the lumped mass stick models that are described above in Subsection 3.7.2.3 to represent the dynamic properties of the super-structures. In the case of the SSI lumped parameter analysis of the R/B-PCCV-containment internal structure, a site-specific SSI analysis is also performed using the computer program SASSI (Reference 3.7-17) in order to confirm that site-specific effects are enveloped by the standard design.

The site-independent SSI analyses of US-APWR standard plant are performed by assuming an absolutely rigid basemat that rests on uniform linear-elastic half-space. A viscous damping represents the dissipation of energy in the elastic-half space that is due to radial damping in the subgrade media. This assumption allows the use of simple closed solutions in terms of frequency-independent lumped parameters that describe the stiffness and the dissipation of energy in the SSI system in the six DOF. Three DOF represent the translations of the basemat in two orthogonal horizontal directions and in the vertical direction. Two DOF represent the rocking of the basemat about two horizontal axes, and one rotational DOF describes the torsional vibrations of the basemat. The lumped parameters representing the stiffness and damping properties of the SSI are calculated from the formulas presented in Table 3.3-3, Subsection 3.3.4.2 of ASCE 4-98 (Reference 3.7-9). The values of the lumped SSI parameters for damping in two horizontal translational DOF are conservatively set at 60% of the theoretical dashpot values obtained from formulas in Table 3.3-3.

The ratio of basemat depth-to-equivalent-radius for the R/B-PCCV basemat is less than 0.3 (the embedded depth is 38'-10"), which indicates a shallow embedment basemat for purposes of SSI as defined in ASCE 4-98, Subsection 3.3.4.2 (Reference 3.7-9). SSI analysis performed as part of the site-independent US-APWR standard plant design conservatively neglects the effects of embedment of the common R/B and PCCV basemat. Therefore, the R/B-PCCV seismic models are not coupled with any subgrade or backfill material at the sides of the basemat or along the faces of below-grade exterior walls, and no credit is taken in the seismic analysis for restraint due to the presence of these materials.

The use of frequency independent SSI impedance parameters is based on the assumption that the subgrade conditions are relatively uniform up to a depth of one equivalent basemat diameter below the bottom of the basemat of the major seismic category I structures. Dry soil conditions are assumed in order to simplify the analysis. The following values for shear wave velocity V_s, density γ and Poisson's ratio ν are assigned to the uniform elastic half-space to simulate the general subgrade conditions:

- Soft soil site, V_s = 1,000 ft/s, γ= 110 pcf, ν = 0.40
- Rock site (Medium 1), V_s = 3,500 ft/s, γ= 130 pcf, ν = 0.35
- Rock site (Medium 2), V_s = 6,500 ft/s, γ= 140 pcf, ν = 0.35
- Hard rock site, V_s = 8,000 ft/s, γ= 160 pcf, ν = 0.30

A fixed base analysis considers the hard rock case listed above. The values used for the soil shear wave velocities are considered to be compatible to the strain level corresponding to the site-independent SSE. Table 3.7.2-3 summarizes the US-APWR standard plant seismic SSI analysis cases, with respect to the input time histories applied to the stick models resting on the uniform elastic half-space having the different subgrade conditions listed above.

The SSI analyses take into account site-specific conditions such as soil layering, location of water table and embedment of the basemat and, thus, validate the results of the site-independent SSI analysis and assumptions contained in the US-APWR standard plant design. Using a lumped parameter model, SSI damping is based on the characteristics of the site-specific subgrade conditions, not to exceed the values specified by the ASCE

4-98 code (Reference 3.7-9). This is accomplished through site-specific SSI analysis as explained below.

3.7.2.4.1 Requirements for Site-Specific SSI Analysis of US-APWR Standard Plant

The COL Applicant referencing the US-APWR standard design is required to perform a site-specific SSI analysis for the R/B-PCCV-containment internal structure utilizing the program ACS-SASSI SSI Version 2.2 (Reference 3.7-17) which contains time history input incoherence function capability. The SSI analysis using SASSI is required in order to confirm that site-specific effects are enveloped by the standard design. After the SASSI analysis is first performed for a specific unit, subsequent COLAs for other units may be able to forego SASSI analyses if the FIRS and GMRS derived for those subsequent units are much smaller than the US-APWR standard plant CSDRS, and if the subsequent unit can also provide justification through comparison of site-specific geological and seismological characteristics.

SSI effects are also considered by the COL Applicant in site-specific seismic design of any seismic category I and II structures that are not included in the US-APWR standard plant. Consideration of structure-to-structure interaction is discussed in Subsection 3.7.2.8. The site-specific SSI analysis is performed for buildings and structures including, but not limited to, to the following:

- Seismic category I ESWPT
- Seismic category I PSFSV
- Seismic category I UHSRS

The site-specific seismic response analysis of R/B-PCCV building structure addresses factors that affect the response of the combined soil-structure dynamic system that include, but are not limited to, the following:

- Properties and layering of the soil, including fill concrete and backfill modeled depending on its horizontal extent
- Depth of the water table
- Basemat embedment
- Flexibility of the basemat
- Presence of nearby structures

Up-to-date modeling techniques capable of capturing the various site-specific SSI effects are used for the analysis. The computer program SASSI is used for the site-specific SSI analysis, because it is based on the use of the FE technique and sub-structuring method with frequency-dependent impedance functions to model the interaction of the embedded flexible basemat with the surrounding soil.

The input used for the site-specific analysis must be derived from geotechnical and seismological investigations of the site. The input control motion that is derived from the site-specific GMRS, is applied in the SASSI analysis as within motion at the bottom of the basemat. Site-specific SSI analyses account for the uncertainties and variations of

the subgrade properties by using at least three sets of site profiles that represent the best estimate, lower bound, and upper bound (BE, LB, and UB for equations, respectively) soil and rock properties. If sufficient and adequate soil investigation data are available, the LB and UB values of the initial (small strain) soil properties are established to cover the mean plus or minus one standard deviation for every layer. In accordance with Subsection 3.3.17 of ASCE 4-98 (Reference 3.7-9), the LB and UB values for initial soil shear modulii (G_s) are established as follows:

$$G_s^{(LB)} = \frac{G_s^{(BE)}}{(1+C_v)} \quad \text{and} \quad G_s^{(UB)} = G_s^{(BE)} \quad (1+C_v)$$

where C_v is a variation factor. ASCE 4-98 (Reference 3.7-9) mandates that value of C_v must be greater than 0.5. When insufficient data are available to address uncertainties in properties of deep soil layers, C_v must be greater than 1.0.

The SSI analysis must use stiffness and damping properties of the subgrade materials that are compatible with the strains generated by the site-specific design earthquake (SSE or/and OBE). The soil properties may be considered strain-independent for subgrade materials with initial shear wave velocities of 3,500 ft/s or higher. The COL Applicant is to institute dynamic testing to evaluate the strain-dependent variation of the material dynamic properties for site materials with initial shear wave velocities below 3,500 ft/s. If the strains in the subgrade media are less than 2%, the strain compatible properties can be obtained from equivalent linear site-response analyses using soil degradation curves. Degradation curves that are published in literature can be used after demonstrating their applicability for the specific site conditions. The strain-compatible soil profiles for the site-specific verification SSI analyses of the major seismic category I structures can be obtained from the results of the site response analyses that are performed to calculate site-amplification factors for the development of GMRS, as described in Subsection 3.7.1.1.

The depth of the water table must be considered when developing the P-wave velocities of the submerged subgrade materials. Significant variations in the water table elevation and significant variations of the subgrade properties in the horizontal direction are addressed by using additional sets of site profiles.

To assure the proper comparability, the site-specific verification SSI analyses must use the same verified and validated lumped mass stick models of the building super-structure as those used for the US-APWR standard plant design. FE analyses are employed to evaluate the flexibility of the basemat and the embedded portion of the building. The floor slabs located at and above the ground surface are assumed absolutely rigid. In order to verify the converted structural model, a site-specific SSI analysis is performed with hard rock site profile that simulates fixed base conditions. The results of the SSI analysis with hard rock site profile are to match closely with the results from the analysis of fixed base stick model. In accordance with requirements of Section 1.2 of RG 1.61 (Reference 3.7-15), the lower OBE damping values in Table 3.7.3-1(b) are assigned to the structural model as complex damping.

The results for 5% damping ISRS at major floor locations and soil pressures on the basement exterior walls that are obtained from all considered soil cases are enveloped and broadened. The plots, tables, and digitized data are then documented for review

and comparison with the corresponding results from site-independent analyses. The COL Applicant is to verify that the results of the site-specific SSI analysis for the broadened ISRS and basement walls lateral soil pressures are enveloped by the US-APWR standard design.

The analyses use input soil properties derived from geotechnical investigations of the site that are compatible to the strains generated in the subgrade by the input design earthquake. The uncertainties and variations of the subgrade properties are considered using the methodology previously described for the development of the strain-compatible site profiles for the site-specific SSI analysis of the major seismic category I structures. The control motions are developed from site-specific FIRS that are described in Subsection 3.7.1.1 and applied to the models at the bottom of the basemat.

In accordance with Section 1.2 of RG 1.61 (Reference 3.7-15), the lower OBE damping values in Table 3.7.3-1(b) are assigned to the structural model used for development of ISRS if the site-specific SSE is not large enough to use the damping values and Table 3.7.3-1(a), and OBE design loads. ISRS do not need to be generated for seismic category II buildings and structures which do not contain or support safety-related SSCs, such as the T/B and A/B.

Simplified SSI modeling approaches, such as a lumped parameter model, can be employed for the site-specific seismic response analyses of seismic category I and II buildings and structures that are not part of the US-APWR standard design if it is demonstrated that for the specific site conditions the following applies:

- The basemats are much stiffer than the supporting subgrade
- The SSI impedance functions remain relatively constant in the range of frequencies important for the design
- The consideration of basemat embedment yields conservative results

In accordance with Subsection 3.3.1.1 of ASCE 4-98 (Reference 3.7-9), fixed base response analysis can be performed if the basemats are supported by subgrades that meet the following condition.

The frequency of the system consisting of subgrade stiffness (SSI impedance) and the combined lumped mass inertia of the whole super-structure and the basemat (i.e., by assuming the super-structure and the basemat are absolutely rigid) are twice the frequency obtained from the fixed base modal analysis of the superstructure.

3.7.2.5 Development of Floor Response Spectra

ISRS for the major seismic category I structures as well as design spectra for the RCL system are required to be developed from the results of the site-independent seismic analysis of the coupled RCL-R/B-PCCV-containment internal structure lumped mass stick model described in Subsection 3.7.2.3 by using direct integration time history analysis method as described in Subsection 3.7.2.1, and by capturing SSI effects for all four generic soil conditions as discussed in Subsection 3.7.2.4. The statistically independent time histories developed from the CSDRS as described in Subsection 3.7.1.1 serve as input control motion for the analysis. The dynamic properties of the stick models and the results of the time history analyses are discussed in detail in Appendix

3H for the R/B-PCCV-containment internal structure and the east and west PS/Bs. The ISRS are derived from the calculated responses of the R/B-PCCV-containment internal structure and PS/Bs lumped mass stick models at locations and elevations where major seismic category I and II SSCs are located.

In developing the ISRS, the effects of floor slab system out-of-plane flexibility are considered by investigating floor slab systems (using local FE models or other means of analysis), independently from the overall lumped mass stick model in order to determine their natural frequencies. Depending on the results, the floor slab systems may then be analyzed as simple single DOF vertical oscillators to determine maximum accelerations (ZPA values) to be used for development of the ISRS for the respective floor locations. If the results of the independent modal analyses indicate that higher modes of vibration have to be considered, the floor systems may also be analyzed as subsystems, as described further in Subsection 3.7.3.1. The local analyses of floor slab systems with respect to out-of-plane flexibility and effects on the ISRS are addressed as part of a Technical Report on the Coupled Model (Reference 3.7-18).

The SSE ISRS for seismic category I buildings and structures of the US-APWR standard plant are developed directly from the results of the site independent seismic analysis. As previously explained in Subsection 3.7.1.1, since the OBE ground motion is limited to a maximum of 1/3 times the CSDRS, explicit design and analysis for OBE is not required, as permitted by 10 CFR 50 Appendix S (Reference 3.7-7). Therefore, separate OBE ISRS are not developed for design and analysis of US-APWR standard plant systems and subsystems.

In the case where seismic qualification by testing is performed in accordance with IEEE Std 344-1987 (Reference 3.7-25), test response spectra which replicate the OBE response spectra are not required since the OBE condition is no longer used as a design basis. The US-APWR program for seismic and dynamic qualification of mechanical and electrical equipment is discussed in Section 3.10.

The ISRS are developed for damping values equal to 0.5%, 2%, 3%, 4%, 5%, 7%, 10%, 20% of critical damping and for variable damping where permitted by ASME Code Case N411-1, as discussed in RG 1.61 (Reference 3.7-15). The ISRS envelope the spectra obtained from the site-independent analyses for all four of the different generic subgrade conditions. Figure 3.7.2-11 outlines the development of the enveloped design ISRS, for which Figure 3.7.2-12 provides an example of a design ISRS. Design ISRS for R/B-PCCV-containment internal structure are provided in Appendix 3I. The process for developing enveloped ISRS is as follows:

- The response spectra are generated for the three components of earthquake by SRSS, following the general guidance of RG 1.122 (Reference 3.7-26) for frequencies up to 100 Hz.
- The maximum spectral acceleration at each frequency obtained from the seismic analysis of any general subgrade conditions is selected for the envelope.
- The enveloped ISRS are smoothed and broadened by +/-15%. The broadened response spectra method discussed in Subsection 3.7.3.1 is used or alternatively in some locations, the peak shifting method described in Subsection 3.7.3.1 can be used.

ISRS are not required for non-seismic category I building structures, such as the AC/B, A/B and T/B, since no safety-related systems and components are present in non-seismic category I buildings and structures. The design, installation, and mounting of non safety-related systems and components in these buildings are based on the applicable site-specific building codes and standards.

3.7.2.6 Three Components of Earthquake Motion

As previously discussed in Subsection 3.7.1.1, the seismic analyses of the major seismic category I structures are based on one set of three mutually orthogonal artificial time histories, with each of the three directional components being statistically independent of the other two. The acceleration time histories of the horizontal H1 and H2 components of the earthquake are applied in N-S direction and E-W directions respectively. The acceleration time history V is applied in the vertical direction.

The three components of the earthquake are applied on the lumped mass stick model separately and the maximum accelerations of the response in the three orthogonal directions are calculated at each lumped mass point. The maximum responses of interest of SSCs obtained from the responses of each of the three components of motion are then combined using SRSS or the Newmark 100%-40%-40% method in accordance with RG 1.92, Rev.2 (Reference 3.7-27). The combined maximum accelerations, obtained through the process described previously in Subsection 3.7.2, are then used as basis for development of the SSE loads used for the design of structural members, components and connections of US-APWR standard plant. These SSE design loads are applied as static loads on the detailed FE model in conjunction with other design loads and load combinations.

The development of the ISRS uses the SRSS method to combine the responses from the three components of the earthquake motion.

Although the above approach has been used for seismic analysis of the major seismic category I structures, seismic responses of other seismic systems and subsystems due to the three components of earthquake motion can be combined using any one of the following methods in accordance with RG 1.92, Rev.2 (Reference 3.7-27):

i) The peak responses due to the three earthquake components from the response spectra and equivalent static analyses are combined using the SRSS method.

ii) The peak responses due to the three earthquake components are combined directly, using the Newmark combination method that assumes that when the peak response from one component occurs, the responses from the other two components are 40% of the peak (100%-40%-40% method). Combinations of seismic responses from the three earthquake components, together with variations in sign (plus or minus) are considered.

iii) The time-history of the responses from the three earthquake components that are applied simultaneously can be combined algebraically at each time step to obtain the combined response time-history. The design seismic loads are selected from the maximum values or the most critical combination of values extracted from the time history results representing the responses directly related to the design of the particular member considering sign reversals, such as the relevant internal forces

or stresses in the member. Due to the uncertainties introduced by phasing effects, the design does not use time history results for other responses, such as accelerations or displacements at points in time that are indirectly related to the basic design inputs.

3.7.2.7 Combination of Modal Responses

As previously discussed, the seismic responses of the major seismic category I structures lumped mass stick models are obtained utilizing the direct integration method of time history analyses. As described in Subsection 3.7.2.1, the damping matrix is not proportional to the stiffness and mass matrix of the combined soil-structure model, so the decomposition of the equations of motion in generalized coordinates is not possible. Therefore, the response of the major seismic category I structures are obtained directly by integrating the equations of motions presented in Equation 3.7.2-1 without performing modal decomposition and subsequent modal superposition.

When the modal superposition time history analyses or response spectra analyses are used for seismic design of other seismic category I and seismic category II systems and subsystems, all necessary modes are included in order to capture a minimum of 90% of the cumulative mass of the building or structure being analyzed. In modal superposition, only modes with frequencies less than the frequencies defining the ZPA response participate in the modal solution. The modal contribution of the residual rigid response for modes with frequencies greater than ZPA frequency is accounted for by using the missing mass method. As permitted by RG 1.92, Rev.2 (Reference 3.7-27), the missing mass contribution, scaled to the instantaneous input acceleration, is treated as an additional mode in the algebraic summation of modal responses at each time step. The missing mass contribution is considered for all DOF.

When the response spectra method of analysis is used (see Subsection 3.7.3.1 for a discussion of response spectra methods of analysis), modal responses have been combined by one of the RG 1.92, Rev.2 (Reference 3.7-27), methods, or by the 10% grouping method described below. In some applications, the more conservative modal combination methods contained in Rev.1 of RG 1.92 (Reference 3.7-28) are also used, as permitted in Revision 2 of RG 1.92 (Reference 3.7-27).

For the 10% grouping method, the total unidirectional seismic response for subsystems is obtained by combining the individual modal responses using the SRSS method.

For subsystems having modes with closely spaced frequencies, this method is modified to include the possible effect of these modes. The groups of closely spaced modes are chosen so that the differences between the frequencies of the first mode and the last mode in the group do not exceed 10% of the lower frequency.

The combined total response for systems having such closely spaced modal frequencies is obtained by adding to the SRSS of all modes the product of the responses of the modes in each group of closely spaced modes times appropriate coupling factors.

This can be represented mathematically as follows:

$$R_T^2 = \sum_{i=1}^{N} R_i^2 + 2 \sum_{j=1}^{S} \sum_{k=Mj}^{Nj-1} \sum_{\ell=k+1}^{Nj} R_k \; R_\ell \; \varepsilon_{k\ell}$$

where

R_T	=	total unidirectional response
R_j	=	absolute value of response of mode i
N	=	total number of modes considered
S	=	number of groups of closely spaced modes
M_j	=	lowest modal number associated with group j of closely spaced modes
N_j	=	highest modal number associated with group j of closely spaced modes
ε_{kl}	=	coupling factor, defined as follows:

$$\varepsilon_{k\ell} = \left(1 + \frac{(w'_k - w'_\ell)^2}{(\beta'_k w_k + \beta'_\ell w_\ell)^2}\right)^{-1}$$

and,

$$w'_k = w_k \; [1 - (\beta_k)^2]^{1/2}$$

$$\beta'_k = \beta_k + \frac{2}{w_k t_d}$$

where

ω_k	=	frequency of closely spaced mode k
β_k	=	fraction of critical damping in closely spaced mode k
t_d	=	duration of the earthquake

Alternatively, a more conservative grouping method can be used in the seismic response spectra analyses. The groups of closely spaced modes are chosen so that the difference between two frequencies (the first and last mode in a group) is no greater than 10%. Therefore,

$$R_T^2 = \sum_{i=1}^{N} R_i^2 + 2 \sum \varepsilon_{kl} R_k R_l$$

where

ω_k	=	first circular frequency in the group
ω_l	=	last circular frequency in the group

All other terms for the modal combination remain the same.

The 10% grouping method is more conservative than the grouping method because the same mode can appear in more than one group.

For the seismic response spectra analysis, the ZPA cut-off frequency is 50 Hz. High frequency or rigid modes must be considered using the static ZPA method, the left-out force method as described in Subsection 3.7.2.7 below, or the Kennedy Missing Mass method contained in Revision 2 of RG 1.92 (Reference 3.7-27).

3.7.2.7.1 Left-Out-Force Method (or Missing Mass Correction for High Frequency Modes)

The left-out-force method is based on the Left-Out-Force Theorem. This theorem states that for every time history load, there is a frequency, f_r, called the "rigid mode cutoff frequency" above which the response in modes with natural frequencies above f_r will very closely resemble the applied load at each instant of time. These modes are called "rigid modes." The formulation follows and is based on the method used in the computer program PIPESTRESS (Reference 3.7-29). The left-out-force method is not used for seismic analysis of the major seismic category I structures; however, it may be used for other seismic category I and II systems and subsystems.

The left-out-force vector for time history analyses, { *Fr* }, is calculated based on lower modes:

$$\{ Fr \} = [1 - \sum M e_j e_j^T] f (t)$$

where

f (t) = the applied load vector

M = the mass matrix

e_j = the eigenvector

Note that ∑ only represents the flexible modes, not including the rigid modes.

In the response spectra analysis, the total inertia force contribution of higher modes can be interpreted as:

$$\{ Fr \} = Am [M] [\{ r \} - \sum P_j e_j]$$

where

Am = the maximum spectral acceleration beyond the flexible modes

[M] = the mass matrix

{ r } = the influence vector or displacement vector due to unit displacement

P_j = participation factor, where

$$P_j = e_j^T [M] \{ r \}, \ \{ Fr \} = Am [M] \{ r \} [1 - \sum M e_j e_j^T]$$

In the response spectra analysis, the low frequency modes are combined by one of the modal combination methods in accordance with RG 1.92, Rev.2 (Reference 3.7-27) as discussed above. For each support level, there is a pseudo-load vector or left-out-force vector in the X, Y, and Z directions.

These left-out-force vectors are used to generate left-out-force solutions which are multiplied by a scalar amplitude equal to a magnification factor specified by the user. This factor is usually the ZPA of the response spectra for the corresponding direction. The resultant low frequency responses are combined by the SRSS with the high frequency responses (rigid modes results).

3.7.2.8 Interaction of Non-Seismic Category I Structures with Seismic Category I Structures

The locations of all major buildings within the power block are shown on the general arrangement drawings in Section 1.2.

Seismic category II structures have been analyzed for the same seismic loads and using the same seismic analysis methods described for seismic category I SSCs in Subsection 3.7.2.1 to verify that they will not collapse or adversely interfere with seismic category I SSCs or adversely affect the MCR occupants. Seismic category II is defined in Section 3.2. By definition, seismic category II structures are designed to retain their position to the extent necessary to assure that they will not impact the function or integrity of seismic category I SSCs.

NS structures have been located such that, in case of their collapse or failure, they do not have the potential to impact seismic category I SSCs, either directly or indirectly.

NS structures that are not located beyond the range of impact are isolated by heavy concrete walls from seismic category I SSCs.

With respect to the coupling of the dynamic responses of adjacent structures through the soil, the phenomenon of structure-to-structure interaction is neglected in the SSI analyses discussed in Subsection 3.7.2.4. Instead, the variations of site properties considered by the four general subgrade conditions are deemed sufficient to address the uncertainties related to possible structure-to-structure interaction effects on the overall seismic response results. Also, for purposes of site-specific SSI analysis as described in Subsection 3.7.2.4 and for subgrade dynamic bearing capacity confirmation, maximum anticipated vertical and lateral pressure distributions below adjacent structure's basemats are to be used. This is acceptable and in accordance with ASCE 4-98 (Reference 3.7-9) Subsection 3.3.1.5 and the related commentary in Subsection C3.3.1.5, provided that local effects such as at below-grade walls are taken into consideration (discussed further below). It is the responsibility of the COL Applicant to further address structure-to-structure interaction if the specific site conditions can be important for the seismic response of particular US-APWR seismic category I structures, or may result in exceedance of assumed pressure distributions used for the US-APWR standard plant design.

In accordance with the requirements of Subsections 3.3.1.5 and 3.5.3 of ASCE 4-98 (Reference 3.7-9), the structural design of US-APWR seismic category I structures accounts for the local effects on below-grade exterior walls that are due to the interaction

with adjacent structures. Maximum lateral earth pressure due to the backfill, surcharge due to live load or adjacent basemat bearing pressures, groundwater, and other such static-load effects on below-grade exterior walls are discussed in Section 3.8. The design of US-APWR seismic category I structures takes into account any dynamic increases of these loads due to a seismic event. This is accomplished through the use of conservative maximum static and dynamic lateral pressure distribution profiles on exterior below-grade walls.

The COL Applicant is to assure that the design or location of any site-specific seismic category I SSCs, for example buried yard piping or duct banks, will not expose those SSCs to possible impact due to the failure or collapse of non-seismic category I structures, or with any other SSCs that could potentially impact, such as heavy haul route loads, transmission towers, non safety-related storage tanks, etc. Alternately, site-specific seismic category I SSCs are designed for impact loads due to postulated failure of the non-seismic category I SSCs.

Following is a discussion of major structures in the power block area with respect to potential interaction with seismic category I structures.

3.7.2.8.1 AC/B

The AC/B is structurally designed as a NS structure on reinforced concrete foundation located at the west side of the A/B (seismic category II). The AC/B is not located adjacent to any seismic category I SSCs. If the AC/B were to fail or collapse, it could impact the A/B which is a seismic category II structure. AC/B is smaller, shorter, and much less massive than the reinforced concrete A/B. In the unlikely event of impact, there would not be sufficient kinetic energy transfer to cause the A/B to displace beyond acceptable limits. Specifically, the A/B would not displace enough to impact the R/B, PS/Bs, or any other seismic category I SSCs.

The design philosophy of the AC/B is stated as follows.

- The seismic design is in accordance with the International Building Code (Reference 3.7-30) with an Importance Factor of 1.0.
- The structure is designed in accordance with applicable building codes.

3.7.2.8.2 T/B

The T/B is structurally designed as seismic category II, such that its integrity will not be impacted by a design basis seismic event; that is the T/B will not fail or collapse due to seismic loading. The T/B is located on the south sides of the R/B and the PS/Bs, and is separated from these structures with an expansion joint at all above-grade interface locations. The expansion joints are sized prevent contact between buildings, even if the maximum translational and rotational displacements due to a seismic loading (and other loading) were to occur. The minimum sizes of expansion joints must be obtained by considering, at all potential contact locations, the absolute summation of the T/B deflection and the adjacent structures' deflection (R/B, PS/Bs, and ESWPT) obtained from the response spectra or time history analysis results for those structures. The nominal horizontal clearance between the T/B structure above grade to adjacent structures is 4 inches.

The T/B is a reinforced concrete structure below grade and a braced steel frame structure above grade. The design philosophy of the T/B is stated as follows.

- The reinforced concrete structure is designed in accordance with the ACI 349 code (Reference 3.7-31), and the braced steel frame structure is designed in accordance with the AISC N690 code (Reference 3.7-32).

- The design of the T/B is based on a static analysis utilizing a three-dimensional FE model, and a seismic dynamic analysis using a three-dimensional lumped mass model.

3.7.2.8.3 ESWPT

The ESWPT passes underneath the T/B at the north end of the T/B. The ESWPT must be physically separated from the basemats of the PS/Bs and the T/B to assure that there will not be contact due to seismic or other loading. The ESWPT will not interact seismically or structurally with the R/B due to separation from the R/B and T/B. Where the ESPWT passes underneath the T/B, the ESWPT is separated on its top and two sides from the T/B basemat elements with a compressible filler material and/or air gap.

The ESWPT is entirely constructed of reinforced concrete. The design philosophy of the ESWPT is stated as follows.

- The ESWPT reinforced concrete structure is designed in accordance with the ACI 349 code (Reference 3.7-31).

- The compressible filler is required to be designed (location and thickness) such that it can compress under seismic and other loads, and such that the bearing loads imposed by compression of the filler material under seismic or other displacement are structurally acceptable.

- The SSE load condition is the same as for the R/B.

- To determine seismic loads and displacements, and to generate ISRS for design of essential service water piping, a two-dimensional SASSI analysis is performed that accounts for soil-structure and structure-structure interaction, if necessary.

- The SASSI analysis is required to be documented and comply with the same general requirements described for the R/B-PCCV-containment internal structure SASSI analysis with the exception that no stick model is required. Instead, plate elements are to be directly included to represent the tunnel in the SASSI model. However, if the T/B is also included in the model for considering the effects of structure-structure interaction, the stick model of the T/B as described in Subsection 3.7.2.8 is used.

3.7.2.8.4 A/B

The A/B contains the US-APWR standard plant radioactive waste processing facility. This facility is designated as Classification RW-IIa in accordance with RG 1.143 (Reference 3.7-19). However, the A/B is designed as seismic category II. The seismic, wind, tornado, and flood design requirements for seismic category II are more stringent

than those of Classification RW-IIa as outlined in RG 1.143 (Reference 3.7-19). The A/B is located on the west side of the R/B, and has one PS/B on its south side and the AC/B on its west side. The A/B is separated from these structures with expansion joint(s) sufficiently sized to prevent contact between buildings even if the maximum translational and rotational displacements due to a seismic loading (and other loading) were to occur. The minimum sizes of expansion joints to prevent interaction is determined by considering, at all potential interaction locations, the absolute summation of the A/B deflection and the adjacent structures' deflection (R/B, PS/B, and AC/B) obtained from the response spectra or time history analysis results for those structures, except for the AC/B, the deflection results are determined through the applicable code method.

The majority of the A/B is a reinforced concrete structure with one floor level below grade and three stories above grade. The design philosophy of the A/B is stated as follows.

- The reinforced concrete structure is designed in accordance with the ACI 349 code (Reference 3.7-31), and the steel beams supporting some floor slabs are designed in accordance with the AISC N690 code (Reference 3.7-32).

- The design of the A/B is based on a static analysis utilizing a three-dimensional FE model, and a seismic dynamic analysis using a three-dimensional lumped mass model.

3.7.2.8.5 R/B and PCCV

The R/B and PCCV are seismic category I structures. The R/B borders the A/B, the two PS/Bs (discussed below), and the T/B on its south side. The R/B rests on a common basemat with and envelopes the PCCV up to the R/B roof, which varies in elevation as shown on the general arrangement drawings in Section 1.2. However, to preclude seismic and structural interaction above the common basemat, the R/B is separated from the PCCV with a 4 in. minimum expansion joint at all above-basemat locations. The expansion joint has been sized to prevent contact between the R/B and PCCV super-structures even if the maximum translational and rotational displacements due to a seismic loading (and other loading) were to occur. The expansion joint size has been determined by considering, at all potential interaction locations, the absolute summation of the deflection associated with each super-structure, obtained from the time history analysis results for those structures.

3.7.2.8.6 PS/Bs

The US-APWR standard plant PS/Bs are seismic Category I structures and their design is described in a separate Technical Report (Reference 3.7-33). The west PS/B borders the A/B, R/B, and T/B. The east PS/B borders the R/B and the T/B. Each PS/B rests on its own basemat. Each PS/B is required to be designed with an expansion joint along its interface with the R/B to assure that no contact will occur between the buildings under a seismic or any other design basis loading. The expansion joint is sized to prevent contact between the structures even if the maximum translational and rotational displacements due to a seismic loading (and other design basis loading) were to occur. The expansion joints are to be determined by considering, at all potential interaction locations, the absolute summation of the deflection associated with each super-structure, obtained from the time history analysis results for those structures.

The plan dimension of each PS/B is nominally 111'-6" x 66'-0" between centerlines of exterior walls. Each PS/B is a reinforced concrete structure with one floor level under ground and the main floor level above ground. The design philosophy of the PS/Bs is stated as follows.

- The east and west PS/Bs are nearly identical structurally, and one bounding analysis is performed to represent both.
- Reinforced concrete structure of the PS/Bs is designed by ACI 349 code (Reference 3.7-31).
- The SSE load condition is the same as for the R/B.
- The design of the PS/Bs is based on a static analysis utilizing a three-dimensional FE model, and a seismic dynamic analysis using a three-dimensional lumped mass model.

3.7.2.9 Effects of Parameter Variations on Floor Response Spectra

ISRS are generated for all US-APWR seismic category I structures.

To account for variations in the structural frequencies due to the uncertainties in parameters, such as material and mass properties of the structures, damping values, soil properties, SSI analysis techniques, and the seismic modeling methods, the computed ISRS are smoothed by filling in valleys between peaks as described in Subsection 3.7.2.5, and the peaks associated with the structural frequencies are broadened by ±15%.

As described in Subsection 3.7.2.4, the seismic analyses of standard plant seismic category I buildings include four generic supporting media intended to bound the varying subgrade conditions and to account for the variation in SSI analysis techniques and seismic modeling methods. The soil properties bound shear wave velocities ranging from 1,000 ft/s, which is the LB of what is considered seismically competent material, up to an UB of 6,500 ft/s corresponding to rock. The seismic models also consider a fixed-base analysis considering a hard rock support medium with a shear wave velocity of 8,000 ft/s. This wide range of supporting media conditions captures SSI and other seismic response effects, including the resulting variances in ISRS.

3.7.2.10 Use of Constant Vertical Static Factors

The plant design does not utilize constant vertical static factors in the seismic design. The vertical component of the seismic motion is obtained using one of the analysis methods described in Subsection 3.7.2.1. The vertical component is combined with the horizontal components of the seismic motion as described in Subsection 3.7.2.6.

3.7.2.11 Method Used to Account for Torsional Effects

The seismic analyses of seismic category I buildings and structures incorporate the torsional DOF in the mathematical models, as discussed in Subsection 3.7.2.3.

The torsional effect is included in accordance with SRP 3.7.2 Section II (Reference 3.7-16) in the design of all seismic category I and II structures by use of the following process:

- Computation of the horizontal mass properties on each floor elevation of the building lumped mass stick models, and the corresponding nodal accelerations.
- Computation of the accidental eccentricity by determining the distance between the center of mass at each floor with respect to its center of rigidity, computed separately for each floor level, as required by ASCE 4 (Reference 3.7-9) Subsection 3.1.1(d).
- The torsional moments due to eccentricities of the masses at each floor elevation are assumed to act in the same direction on each structure unless otherwise demonstrated in the analysis. Both positive and negative values are considered in order to capture worst case effects.

For member design only, an additional building torsion (accidental torsion) equal to story shear force with a moment arm of 5% of the plan dimension of the floor perpendicular to the direction of the applied motion, as stipulated in ASCE 4-98 (Reference 3.7-9) Subsection 3.1.1 (e), is applied in the resultant force calculations. As explained in ASCE 4-98 Subsection 3.3.1.2 (a), this accounts for effects of non-vertically incident or incoherent waves.

The methods and approaches used to capture torsional effects in seismic category I buildings are described further in Subsection 3.7.2.3.

3.7.2.12 Comparison of Responses

The major seismic category I structures are analyzed using time history analysis methods.

As described in Subsection 3.7.1.1, the time history analyses are based on design ground motion time histories which have been artificially synthesized and meet the requirements of “Acceptance Criteria, Design Time History Option 1: Single Set of Time Histories, Approach 2”, NUREG-0800, SRP 3.7.1, Section II (Reference 3.7-10). As required by Approach 2, the response spectra obtained from the artificial ground motion time histories have been compared with the target response spectra to assure that the spectra derived from the time histories match/envelope the CSDRS with an approximate mean based fit.

3.7.2.13 Methods for Seismic Analysis of Dams

The US-APWR standard plant design does not include dams. It is the responsibility of the COL Applicant to perform any site-specific seismic analysis for dams that may be required.

3.7.2.14 Determination of Dynamic Stability of Seismic Category I Structures

Based on NUREG-0800, SRP 3.8.5 (Reference 3.7-34), for all structures, for load combinations involving SSE loads, a minimum factor of safety of 1.1 against overturning and sliding under the worst condition of loading is provided. If an OBE value is chosen to

be greater than 1/3 of the site-specific SSE for the design of site-specific seismic category I structures, then load combinations involving the site-specific OBE must have a minimum factor of safety of 1.5 against overturning and sliding.

The US-APWR standard plant design is based on the assumption, as discussed in Chapter 2, that there is no potential for liquefaction of the supporting media. In order to verify the dynamic stability of US-APWR standard plant and site-specific seismic category I structures, site-specific investigations are performed of the supporting media as described in Subsection 2.5.4.8 to verify that there is no potential for liquefaction. The site-specific factor of safety against liquefaction is determined to confirm the dynamic stability of seismic category I structures for the US-APWR standard design with respect to liquefaction.

3.7.2.15 Analysis Procedure for Damping

The analysis procedure of damping in the various elements of the soil-structure system model has been discussed in Subsections 3.7.1.2, 3.7.2.3, and 3.7.2.4.

3.7.3 Seismic Subsystem Analysis

This section addresses seismic analysis of civil structure-related seismic category I subsystems, which are analyzed in accordance with NUREG-0800, SRP 3.7.3 (Reference 3.7-35). The civil structure-related subsystems are accounted for in the global seismic models of the seismic category I building structures described in Subsection 3.7.2.3 by considering the mass and mass distribution of the subsystems in the models. However, seismic analysis of the subsystems has generally been performed separately because the subsystems do not contribute to the building stiffness and because the seismic responses of the buildings (ISRS as discussed in Subsection 3.7.2.5) serve as the seismic design input motion for the subsystems. SSCs that are seismically analyzed as civil structure-related subsystems include:

- Structures such as miscellaneous steel platforms, stairs, and walkways.
- Structures such as reinforced masonry block walls and enclosures.
- HVAC ducts and duct supports. The design of HVAC ducts and duct supports is addressed further in Appendix 3A.
- Conduits and conduit supports. The design of conduits and conduit supports is addressed further in Appendix 3F.
- Cable trays and tray supports. The seismic qualification of cable trays and tray supports is addressed in Appendix 3G.
- Pipe racks and pipe support framing. These structures may also be analyzed as part of mechanical piping subsystems as discussed in Section 3.12.
- Pipe whip restraints. See Section 3.6 and Appendix 3B for a discussion of the design of pipe whip restraints for dynamic loads due to pipe rupture and Appendix 3E for discussion of high energy piping design.
- Equipment cabinet structural framing and/or mounting.

In addition to the above, civil structure-related subsystems also include those seismic category I and II SSCs such as direct buried piping, conduit tunnels, dams, dikes,

aboveground tanks, and the like, which are exterior to the R/B, PCCV, PS/Bs, and the ESWPT.

Seismic and dynamic qualification of mechanical and electrical equipment and subsystems performed by testing is discussed in Section 3.10 and Appendix 3D. Mechanical subsystems include mechanical equipment, piping, vessels, tanks, heat exchangers, valves, and instrumentation tubing and tubing supports. The seismic analysis of mechanical subsystems is addressed in Sections 3.9 and 3.12. The RCL analysis is discussed in Appendix 3C.

A list of seismic category I mechanical and fluid systems, components, and equipment is given in Table 3.2-2. Seismic analysis of civil structural items related to those subsystems is discussed in this subsection.

3.7.3.1 Seismic Analysis Methods

Modal response spectra analysis, time history analysis, or equivalent static load analysis methods may be used for seismic analysis of seismic category I subsystems. The methods are the same as those discussed in Subsection 3.7.2.1 and conform to the requirements of SRP 3.7.1 and SRP 3.7.2 (References 3.7-10 and 3.7-16).

Time history analysis of seismic systems is discussed in Subsection 3.7.2. The time-history seismic analysis of a subsystem can be performed by simultaneously applying the displacements and rotations at the interface point(s) between the subsystem and the system. These displacements and rotations are the results obtained from a model of a larger subsystem or a system that includes a simplified representation of the subsystem.

The choice of applied seismic analysis method depends on the desired level of precision and the level of complexity of the particular subsystem being designed. The equivalent static load method of analysis is predominantly used for civil structure-related seismic subsystems and is generally the preferred method because it is relatively simple and at least as conservative as the other more detailed methods. For example, the equivalent static load analysis method is generally used for miscellaneous steel platforms, stairs, and walkways, reinforced masonry block walls and enclosures, HVAC ducts and duct supports, electrical tray and tray supports, and conduits and conduit supports.

The equivalent static load method of analysis and the various modal response spectra analysis methods are described in the following subsections.

3.7.3.1.1 Equivalent Static Load Method of Analysis

The equivalent static load method involves the use of equivalent horizontal and vertical static forces applied at the center of gravity of various masses. The equivalent force at a mass location is computed as the product of the mass and the seismic acceleration value applicable to that mass location. Loads, stresses, or deflections obtained using the equivalent static load methods are adjusted to account for the relative motion between points of support when significant.

3.7.3.1.2 Single DOF or Rigid Structures and Components

For rigid structures and components, or for cases where the response is such that the system has a single DOF, the following procedures may be used:

- For rigid SSCs (fundamental frequency greater than 50 Hz), an equivalent seismic load is defined for the direction of excitation as the product of the component mass and the ZPA value obtained from the applicable ISRS.
- A rigid component (fundamental frequency greater than 50 Hz), whose support can be represented by a flexible spring, can be modeled as a single DOF model in the direction of excitation (horizontal or vertical directions). The equivalent static seismic load for the direction of excitation is defined as the product of the component mass and the seismic acceleration value corresponding to the natural frequency of the support from the applicable ISRS. If the frequency is not determined, the peak acceleration from the applicable ISRS times a factor of 1.5 is used. Supports which have been determined to have natural frequencies less than the frequency corresponding to the peak floor acceleration (i.e., whose natural frequencies are to the left of spectra peak on an acceleration versus the frequency spectra plot) also utilize the peak acceleration times a factor of 1.5.
- If the structure, equipment, or component has a distributed mass whose dynamic response is single mode dominant, the equivalent static seismic load for the direction of excitation is defined as the product of the component mass and the seismic acceleration value at the component natural frequency from the applicable ISRS times a factor of 1.5, with exceptions noted as follows. A factor of less than 1.5 may be used if justified, such as using a factor of 1.0 when the component natural frequency is in the rigid range (greater than 50 Hz), such that no dynamic amplification will occur. A factor of 1.0 is used for structures or equipment that can be represented as simply supported, fixed-simply supported, or fixed-fixed beams as discussed in References 3.7-36 and 3.7-37. In accordance with ASCE 4-98, Subsection 3.2.5.2 (Reference 3.7-9), for cantilever beams with uniform mass distribution, the equivalent-static-load base shear is determined using the peak acceleration, and the base moment is determined using the peak acceleration times a factor of 1.1. If the frequency of a structure, equipment, or component is not determined, the peak acceleration from the applicable ISRS times a factor of 1.5 is used. Any structures, equipment, or components which have been determined to have natural frequencies less than the frequency corresponding to the peak floor acceleration (i.e., whose natural frequencies are to the left of spectra peak on an acceleration versus the frequency spectra plot) also utilize the peak acceleration times a factor of 1.5 unless otherwise justified.

3.7.3.1.3 Multiple DOF Response

This procedure applies to piping, instrumentation tubing, conduit, cable trays, HVAC, and other structural subsystems consisting of multiple spans. The equivalent static load method of analysis can be used for the design of piping systems, and the instrumentation and supports that have significant responses at several vibrational frequencies. In this case, a static load factor of 1.5 is applied to the peak accelerations of the applicable ISRS, unless a lower value is justified. For runs with axial supports, the acceleration value of the mass of piping in its axial direction may be limited to 1.0 times

its calculated spectral acceleration value. The spectral acceleration value is based on the frequency of the piping system along the axial direction. The relative motion between support points is also considered.

3.7.3.1.4 Modal Response Spectra Analysis

The methods of modal response spectra analysis that have been utilized for the design of seismic category I and II SSCs are the envelope broadened response spectra method, the peak shifting method, the uniform support motion method and the independent support motion method, described in the following subsections.

3.7.3.1.5 Envelope Broadened Response Spectra Method

The envelope broadened response spectra method is based on the utilization of the ISRS that are developed for the US-APWR seismic category I structures and buildings. The ISRS are developed by filling in the valleys between all peaks, and broadening the peaks, of the theoretical ISRS that are developed from the time history seismic analyses methods and models discussed in Subsection 3.7.2.

3.7.3.1.6 Seismic Response Spectra Peak Shifting

The peak shifting method may be used in place of the broadened spectra method. It determines the natural frequencies $(f_e)_n$ of the system to be qualified in the broadened range of the maximum spectra acceleration peak. If no equipment or piping system natural frequencies exists in the ±15% interval associated with the maximum spectra acceleration peak, then the interval associated with the next highest spectra acceleration peak is selected and used in the following procedure.

Consider all *N* natural frequencies in the interval:

$$f_j - 0.15f_j \leq (f_e)_n \leq f_j + 0.15f_j$$

where

f_j = the frequency of maximum acceleration in the envelope spectra

n = 1 to N

The system is evaluated by performing *N*+3 separate analyses using the envelope un-broadened ISRS and the envelope un-broadened spectra modified by shifting the frequencies associated with each of the spectral values by a factor of +0.15; -0.15; and

$$\frac{(f_e)_n - f_j}{f_j}$$

where

n = 1 to N

The results of these separate seismic analyses are then enveloped to obtain the final result desired (e.g., stress, support loads, acceleration) at any given point in the system. If three different ISRS curves are used to define the response in the two horizontal and the vertical directions, then the shifting of the spectral values, as defined above, may be applied independently to these three response spectra curves.

3.7.3.1.7 Multiple Support Response Spectra Input Methods

The uniform support motion method and the independent support motion methods use multiple-input response spectra which account for the phasing and interdependence characteristics of the various support points. These methods are based on the guidelines provided by the "Pressure Vessel Research Committee Technical Committee on Piping Systems" (Reference 3.7-38) and have been most often applied to plant piping subsystems but are also applicable to other subsystems with multiple support points.

3.7.3.1.7.1 Uniform Support Motion Method

For analyzing plant SSCs supported at multiple locations within a single structure, a uniform response spectrum is defined that envelopes all of the individual response spectra at the various support locations. The uniform response spectrum is applied at all support locations to calculate the maximum inertial responses of the plant SSCs. This is referred to as the uniform support motion method. Modal combinations for this method including missing mass computations must be performed in accordance with RG 1.92, Rev. 2 (Reference 3.7-27). The seismic response spectrum, which envelopes the supports, is used in place of the spectra at each support in the envelope uniform response spectra. The contribution from the seismic anchor motion of the support points is assumed to be in phase and is added algebraically as follows:

$$q_i = d_j \Sigma P_{ij} d_{ij}$$

where

q_i = combined displacement response in the normal coordinate for mode i

d_j = maximum value of d_{ij}

d_{ij} = displacement spectral value for mode i associated with support j

P_{ij} = participation factor for mode i associated with support j

Σ = summation for support points from j = 1 to N

N = total number of support points

The enveloped response spectra are developed as the seismic input in three perpendicular directions of the coordinate system to include the spectra at all floor elevations of the attachment points and the piping module or equipment, if applicable. The mode shapes and frequencies below the cut-off frequency are calculated in the response spectra analysis. The modal participation factors in each direction of the earthquake motion and the spectral accelerations for each significant mode are calculated. Based on the calculated mode shapes, participation factors, and spectral accelerations of individual modes, the modal inertia response forces, moments, displacements, and accelerations are calculated. For a given direction, these modal inertia responses are combined based on the consideration of closely spaced modes

and high frequency modes to obtain the resultant forces, moments, displacements, accelerations, and support loads. The total seismic responses are combined by the SRSS method for all three earthquake directions.

3.7.3.1.7.2 Independent Support Motion Method

When there is more than one supporting structure, the independent support motion method for seismic response spectra may be used.

Each support group is considered to be in a random-phase relationship to the other support groups. The responses caused by each support group are combined by the SRSS method. The displacement response in the modal coordinate becomes:

$$q_i = [\sum_{j=1}^{N} (P_{ij} \ d_{ij})^2]^{1/2}$$

A support group is defined by supports that have the same time-history input. This usually means all supports located on the same floor (or portions of a floor) of a structure.

3.7.3.1.7.3 Analysis of Seismic Subsystems versus Qualification by Testing

For the purpose of seismic and dynamic qualification of civil structure-related SSCs by *analysis* using the methods described above in this section, the rigid range is defined as having a natural frequency greater than 50 Hz. This is consistent with the CSDRS defined in Subsection 3.7.1.1. However, for the purpose of *testing* equipment that is not sensitive to response levels caused by high frequency ground motions, rigid is defined as equipment with a natural frequency greater than 33 Hz. If the equipment to be tested is sensitive to the response caused by high frequency ground motions, then rigid is defined as equipment having a natural frequency greater than 50 Hz. This approach is further clarified in the following paragraphs.

Historically, there have been occurrences of ground motions which have caused an exceedance of a plant's design spectra in the high frequency range, where high frequency is defined as 10 Hz or greater. Based on this nuclear plant operating experience, the high frequency response motion exceedances were found to be non-damaging to passive civil structure-related components such as those addressed in the section above, which are typically qualified by analysis. However, nuclear industry experience has found that certain SSCs, in particular components such as relays and other electrical and instrumentation and control devices whose output signals could be affected by high frequency excitation, are potentially sensitive to high frequency motion and can be damaged by high frequency exceedances of the design spectra. A test program is established to identify, evaluate, and qualify or eliminate such SSCs that are potentially sensitive to high frequency exceedances. The US-APWR seismic and dynamic equipment qualification test program for active components including valves, piping, and other plant SSCs is in accordance with IEEE Std 344-1987 (Reference 3.7-25) and is addressed in Section 3.10.

3.7.3.2 Procedures Used for Analytical Modeling

Seismic subsystems are defined as those systems that are not analyzed in conjunction with basemats and subgrade, as previously discussed in Subsection 3.7.2. The procedures used for analytical modeling of subsystems may be the same as those used for the major seismic category I and II building structures described previously in Subsection 3.7.2.3. These procedures include the use of mathematical computer models comprised of nodes and elements used to represent connections and members. The models are sufficiently detailed to represent the overall structural and seismic response. Depending on the complexity of the seismic subsystem, structure, or component being analyzed, detailed member design may be performed by hand calculations using the results of the overall building structural and seismic analyses. Alternatively, the computer model may be sufficiently detailed to be used for the design calculation of the individual members.

3.7.3.3 Analysis Procedure for Damping

Energy dissipation within a structural system is represented by equivalent viscous dampers in the mathematical model. The damping coefficients used are based on the material, load conditions, and type of construction used in the structural system. The SSE damping values to be used in the dynamic analysis for various seismic category I and II subsystems and their related supports are shown in Table 3.7.3-1(a). The damping values are based on RG 1.61 (Reference 3.7-15) and ASCE Standard 4-98 (Reference 3.7-9). The damping value of conduit, empty cable trays, and their related supports is similar to that of a bolted structure, namely 7% of critical. The damping value of filled cable trays and supports increases with increased cable fill and level of seismic excitation. The use of higher damping values for cable trays with flexible support systems (e.g., rod-hung trapeze systems, strut-hung trapeze systems, and strut-type cantilever and braced cantilever support systems) is permissible, subject to obtaining NRC review for acceptance on a case-by-case basis.

For subsystems that are composed of different material types, the composite modal damping approach with either the weighted mass or stiffness method is used to determine the composite modal damping value. Alternately, the minimum damping value may be used for these systems.

Composite modal damping for coupled building and piping systems is used for piping systems that are coupled to the RCL and the containment internal structure. Alternatively, Rayleigh damping with direct integration may be used. Seismic analysis of the RCL is addressed in a separate Technical Report (Reference 3.7-18), and piping systems coupled to the RCL are also addressed therein.

Piping systems are analyzed for SSE using 4% damping. Alternatively, frequency-dependent damping values may be utilized as noted and described in Tables 3.7.3-1(a) and 3.7.3-1(b). The seismic analysis of piping and other mechanical subsystems is addressed in further detail in Sections 3.9 and 3.12.

3.7.3.4 Three Components of Earthquake Motion

For seismic category I subsystems, the three components of earthquake motion are considered in the same manner as described in Subsection 3.7.2.6.

Two horizontal components and one vertical component of seismic response spectra are employed as input to a modal response spectra analysis. The spectra are associated with the SSE. In the response spectra and equivalent static analyses, the effects of the three components of earthquake motion are combined using one of the following methods:

- The peak responses due to the three earthquake components from the response spectra analyses are combined using the SRSS method.
- The peak responses due to the three earthquake components are combined directly, using the assumption that when the peak response from one component occurs, the responses from the other two components are 40% of the peak (100%-40%-40% method). Combinations of seismic responses from the three earthquake components, together with variations in sign (plus or minus), are considered. This method is not used for piping systems.

3.7.3.5 Combination of Modal Responses

Where seismic subsystems are analyzed by the equivalent static load method of analysis, a combination of modal responses is not applicable. For this method of analysis, static load factors are applied to acceleration values, which are taken from the appropriate ISRS discussed in Subsection 3.7.2.5. The static load factors are chosen using the guideline of Reference 3.7-9 to be sufficiently conservative to capture multi-modal response effects.

For the response spectra method of analysis, the combination of modal responses is performed in the same manner as described in Subsection 3.7.2.7.

3.7.3.6 Use of Constant Vertical Static Factors

As discussed in Subsection 3.7.2.10, the plant design does not utilize constant vertical static factors in the seismic design.

3.7.3.7 Buried Seismic Category I Piping, Conduits, and Tunnels

Buried seismic category I piping, conduits, and tunnels are not present in the US-APWR standard plant design. Physical space is reserved and planned to provide a site-specific seismic category I ESWPT passing underneath the north end of the T/B which is also a structure designed as site-specific. A representative anticipated configuration of the ESWPT is shown on the general arrangement drawings in Section 1.2.

The ESWPT provides access for in-service inspection. It will support safety-related piping, conduit, and equipment. Backfill material is present on the sides and likely the top of the ESWPT, and engineered structural or concrete backfill may be utilized beneath the tunnel as well. To design and qualify the site-specific safety-related SSCs mounted or housed within the tunnel, the following requirements apply to the site-specific design of the ESWPT as described in Subsection 3.7.2.8:

- ISRS are required. To generate the ISRS on the tunnel walls, basemat and roof, a SASSI program (Reference 3.7-17) SSI analysis is required if soil supported. The SASSI analysis is required to be documented and comply with the same general requirements described for the R/B-PCCV-containment internal structure

SASSI analysis with the exception that no stick model is required. Instead, plate elements are to be directly included to represent the tunnel in the SASSI model.

3.7.3.8 Methods for Seismic Analysis of Category I Concrete Dams

The US-APWR standard plant design does not include dams. It is the responsibility of the COL Applicant to perform any site-specific seismic analysis for dams that may be required.

3.7.3.9 Methods for Seismic Analysis of Aboveground Tanks

It is the responsibility of the COL Applicant to design seismic category I below- or above-ground liquid-retaining metal tanks such that they are enclosed by a tornado missile protecting concrete vault or wall, in order to confine the emergency gas turbine fuel supply.

The other seismic category I liquid-retaining vessels utilized in the design are reinforced concrete vessels whose walls and floors form part of the building structural framework, including the following:

- Spent fuel pit, located in the R/B with top of vessel at level 4F
- Refueling cavity, located in PCCV with top of vessel at level 4F
- Fuel transfer canal, which connects the spent fuel pit and refueling cavity
- Cask washdown pit located in the R/B with top of vessel at level 4F
- Cask loading pit and fuel inspection pit located in the R/B and connected to the spent fuel pit with a canal, with tops of vessels at level 4F
- New fuel storage pit located in the R/B with top of vessel at level 4F
- Refueling water storage pit, located in PCCV below level 2F

The hydrodynamic loads due to seismic sloshing are considered in the design of these structures as part of the seismic loading and are calculated in accordance with ASCE 4-98, Subsection 3.5.4 (Reference 3.7-9). The horizontal response analysis considers both the impulsive mode (in which a portion of the water moves in unison with the tank wall) and the horizontal sloshing convective mode. The seismic sloshing analysis also considers potential slosh heights with respect to the potential of creating flooding, which is discussed in Section 3.4.

3.7.4 Seismic Instrumentation

The proposed seismic instrumentation program for the US-APWR is in accordance with NUREG-0800, SRP 3.7.4 (Reference 3.7-39) and all aspects of 10 CFR 50, Appendix S (Reference 3.7-7), which requires that “suitable instrumentation must be provided so that the seismic response of nuclear power plant features important to safety can be evaluated promptly after an earthquake.” Appendix S of 10 CFR 50 (Reference 3.7-7) also requires a shutdown of the plant if vibratory ground motion exceeding that of the OBE ground motion occurs, or significant plant damage occurs.

3.7.4.1 Comparison with Regulatory Guide 1.12

The proposed seismic instrumentation program is generally in accordance with RG 1.12 and RG 1.166 (References 3.7-40, 3.7-41), and consistent with the methodology used for seismic analysis that is discussed in Subsection 3.7.2. The seismic design of US-APWR standard plant is based on site-independent seismic response analysis of basemat resting on the surface of elastic half-space that is subjected to a control motion. The site independent OBE is defined as 1/3 of the CSDRS presented in Subsection 3.7.1.1. Verification of the site-independent standard design is performed during seismic analyses that consider site-specific conditions, such as soil layering, basemat embedment, water table depth etc. FIRS, which are developed from site-specific GMRS, define the site-specific control design motion.

The criteria that define the vibratory motion that requires the shutdown of the US-APWR plant is based on the site-specific OBE. The conditions that require a shutdown of the US-APWR plant are defined by the OBE ISRS at the locations of seismic instrumentation. Site-specific FIRS are developed at the locations of seismic instrumentation by performing site-specific seismic response analyses that use, as input, the site-specific OBE design motion. The measured response spectra at each of the instrumentation locations in Subsection 3.7.4.2 are compared against the corresponding instructure acceleration and velocity response spectra in accordance with RG 1.166 (Reference 3.7-41). The comparison evaluation is to be performed within 4 hours of the earthquake using data obtained from the three components of the earthquake motion as defined by the three orthogonal axes of the standard plant (two horizontal and one vertical) on the uncorrected earthquake records. The evaluation is also to include a check on the operability of the seismic instrumentation as mandated by Section 4.3 of RG 1.166 (Reference 3.7-41).

The locations of seismic monitors for the US-APWR standard plant are provided in Subsection 3.7.4.2. The COL Applicant is to verify the site-specific applicability of these monitors, and determine if there is a need for the installation of additional instrumentation for the measurement of the free-field ground motion based on conditions and requirements specific to the site. The CAV is based on criteria for exceedance of OBE using measurements taken in the free-field, however the OBE exceedance can be evaluated by using only measurements from instrumentation installed on the buildings and the structures of the US-APWR standard plant. The seismic instrumentation for monitoring the free-field ground motion is not specifically required since both the site-independent and site-specific design are based on control motions that are defined at the bottom of the basemats. The response spectra of the free-field ground motion are not directly relevant to the design of the US-APWR standard plant nor are directly comparable to the design input ground motion as defined by the CSDRS and FIRS in Subsection 3.7.1.1.

The calculation of the CAV is performed in the manner provided in Electric Power Research Institute (EPRI) Report TR-100082 (Reference 3.7-42). As stated in RG 1.166 (Reference 3.7-41), the range of the spectral velocity limit should be 1.0 to 2.0 Hz which is different than that recommended by EPRI. In accordance with RG 1.166 (Reference 3.7-41), for each component of the free-field ground motion, the CAV should be calculated as follows: (1) the absolute acceleration (g units) time-history is divided into 1-second intervals, (2) each 1-second interval that has at least 1 exceedance of 0.025 g is integrated over time, (3) all the integrated values are summed together to

arrive at the CAV. The approaches in EPRI Report NP-5930 (Reference 3.7-43) and EPRI Report TR-100082 (Reference 3.7-42) provide additional guidance on determining the CAV.

Acceleration and velocity spectra can be calculated from the measurement of free-field ground motion in order to set additional conditions for OBE exceedance in addition to the CAV check. In accordance with RG 1.166 (Reference 3.7-41), the OBE is exceeded only if all of the following three conditions are met:

1. Any of calculation of CAV described above yields value that is greater than 0.16 g-second
2. Ground motion ARS is higher than 0.2 g at frequencies between 2 and 10 Hz
3. Ground motion velocity response spectra is higher than 6 in./sec at frequencies between 1 and 2 Hz

The shutdown of the plant is required only if all three of the above conditions are met and any of the ARS obtained from the measurements of the instructure accelerations exceed the OBE spectra at the corresponding location. If the free-field ground motion is not measured, it is conservatively assumed that the checks of CAV and free-field ground accelerations and velocities are exceeded.

Additionally, low-level seismic effects would be included in the design of certain equipment potentially sensitive to a number of such events, based on a percentage of the responses calculated for the SSE.

3.7.4.2 Location and Description of Instrumentation

Consistent with the guidance of RG 1.12 (Reference 3.7-40), the seismic instrumentation for the US-APWR standard plant is solid-state multi-channel digital instrumentation with computerized recording and playback capability that allows the processing of data at the plant site within 4 hours of a seismic or other dynamic event.

The US-APWR triaxial time-history accelerograph consists of a centralized digital time history analyzer/recorder with multi-channel capability, which is located in a panel in a room adjacent to the plant MCR, and triaxial acceleration sensors that are provided at the following plant locations:

- On the PCCV basemat, located in the R/B on the B1F level at elevation -23 ft, 4 in.
- On level 2F of PCCV at elevation 25 ft, 3 in., located in the southwest quadrant outside the steam generator and reactor coolant compartment.
- On level 4F of PCCV operating deck slab at elevation 76 ft, 5 in., located in the southwest quadrant outside the steam generator and reactor coolant compartment underneath the access stairs adjacent to the west PCCV buttress.
- On the basemat of the east PS/B on the B1F level at elevation -23 ft, 4 in., in the non safety-related turbine generator anteroom.
- On level 1F of the east PS/B at elevation 3 ft, 7 in., in the non safety-related turbine generator control room.

The locations listed above correlate to structural elements in the structures which have been modeled as mass points in the dynamic analysis so that the measured motion can be directly compared to the design spectra. The instrumentation mounted at the locations listed above is not mounted on equipment, piping, supports, or secondary structural frame members. These locations have been reviewed in accordance with RG 8.8 (Reference 3.7-44) and determined to be consistent with maintaining dose rates as low as practical and maintaining occupational radiation exposures as low as is reasonably achievable for access and maintenance of the instrumentation.

The COL Applicant is to assure that a time-history analyzer/recorder is provided which has the capability to provide pre-event recording time of 3 seconds minimum and post-event recording time of 5 seconds minimum, and to record at least 25 minutes of sensed motion. The recorder portion of the time-history analyzer is to have the capability of a sample rate of at least 200 samples per second in each of the three orthogonal directions of the plant, a bandwidth of 0.20 Hz to 100 Hz, and a dynamic range of 1,000:1 zero to peak. The triaxial acceleration sensors are to have the same dynamic range as the time-history analyzer recorder and a frequency range of 0.20 Hz to 100 Hz. The triggers of the tri-axial acceleration sensor units are to be capable of being set within the range of 0.001g to 0.02g. Power supply for the seismic monitoring instrumentation system will normally be from the non-Class-1E direct current and uninterruptible power supply system, however, the system is to be equipped with dedicated back-up batteries and charger in case of power outage or power failure.

The seismic instrumentation serves no safety-related function and, therefore, has no nuclear safety design requirements. However, its design and location are in accordance with RG 1.12 (Reference 3.7-40), which requires that the seismic instrumentation:

- will not be affected by the failure of adjacent SSCs during an earthquake;
- will operate during all modes of plant operation, including periods of plant shutdown; and
- is protected as much as practical against accidental impacts.

As required by RG 1.12 (Reference 3.7-40), the seismic instrumentation is rigidly mounted and oriented so that the horizontal components are parallel to the horizontal axes of the standard plant used in the seismic analyses. These features of the seismic monitoring instrumentation are obtained by qualifying the equipment to IEEE Std 344-1987 (Reference 3.7-25); the seismic qualification program is discussed in Section 3.10.

3.7.4.3 Control Room Operator Notification

The US-APWR standard plant is designed such that triggering of the instrumentation described above is annunciated in the MCR of the plant. For sites which will have more than one US-APWR unit, only one unit is required to have seismic instrumentation, provided that the anticipated seismic response at each of the units is considered essentially the same and provided that annunciation is provided at all unit MCRs. The COL Applicant is to determine from the site-specific geological and seismological conditions if multiple US-APWR units at a site will have essentially the same seismic response, and based on that determination, choose if more than one unit is provided with seismic instrumentation at a multiple-unit site.

3.7.4.4 Comparison with Regulatory Guide 1.166

In accordance with RG 1.166 (Reference 3.7-41), it can be assumed that the checks of CAV and free-field ground accelerations and velocities are exceeded so the US-APWR standard plant does not have to rely upon seismic instrumentation located in the free-field for checks of OBE exceedance. As previously discussed in Subsection 3.7.4.1, the OBE exceedance checks can be performed using only uncorrected earthquake data for the three orthogonal plant directions (two horizontal and one vertical) obtained from seismic instrumentation installed at five plant locations (two basemat locations and three upper level locations as described in Subsection 3.7.4.2). It should be noted that the use of five instrument locations is more conservative than the interim OBE exceedance guidelines given in Appendix A of RG 1.166 (Reference 3.7-41), which allow basemat-level only instrumental checks.

The seismic instrumentation program must be in accordance with the guidelines of RG 1.166 (Reference 3.7-41) and EPRI NP-6695 (Reference 3.7-45) which are summarized as follows:

- Assure that a file containing information on all seismic instrumentation is maintained at the plant in accordance with regulatory position C1.1 of RG 1.166 (Reference 3.7-41).
- Implement planning for post-earthquake walkdown inspections by pre-selecting equipment and structures for inspections and pre-determining the content of the baseline inspections.
- Implement guidelines for actions to be performed immediately after an earthquake, including a check of the neutron flux monitoring sensors as part of the specific MCR board checks.
- Assure proper evaluation of ground motion records.
- Assure that after an earthquake at the plant site, an operability check is performed on the seismic instrumentation.
- If a shutdown is required, assure that the pre-shutdown inspections, including a check of the containment isolation system, are performed.

3.7.4.5 Instrument Surveillance (Including calibration and testing)

The seismic instrumentation is in accordance with the type and location requirements discussed in Subsection 3.7.4.2 and RG 1.12 (Reference 3.7-40). The instrumentation requires minimal maintenance and in-service inspection, as well as minimal time and numbers of personnel to conduct installation and maintenance. The seismic monitoring instrumentation is configured such that testing or maintenance can be performed on a single channel without affecting the functioning of other channels.

A seismic monitoring system preoperational test is outlined in Chapter 14.

As required by RG 1.12 (Reference 3.7-40), instrumentation systems are to be given channel checks every 2 weeks for the first 3 months of service after startup. Failures of devices normally occur during initial operation. After the initial 3-month period and 3 consecutive successful checks, monthly channel checks are sufficient. The monthly

channel check is to include checking the batteries. The channel functional test should be performed every 6 months. Channel calibration should be performed during each refueling outage at a minimum.

It is the responsibility of the COL Applicant to develop a site-specific instrument surveillance program including calibration and testing that complements the US-APWR seismic instrumentation program, and to develop site-specific maintenance and repair procedures that maximize the number of instruments in service during plant operation and shutdown.

3.7.4.6 Program Implementation

It is the responsibility of the COL Applicant to provide the site-specific details of the seismic instrumentation implementation plan based on the discussion in Subsections 3.7.4.1 through 3.7.4.5.

3.7.5 Combined License Information

COL3.7(1) The COL Applicant is to confirm that the site-specific PGA at the basemat level control point of the CSDRS is less than or equal to 0.3 g.

COL3.7(2) The COL Applicant is to perform an analysis of the US-APWR standard plant seismic category I design to verify that the site-specific FIRS at the basemat level control point of the CSDRS are enveloped by the site-independent CSDRS.

COL3.7(3) It is the responsibility of the COL Applicant to develop analytical models appropriate for the seismic analysis of buildings and structures that are designed on a site-specific basis including, but not limited to, the following:

- *PSFSVs (seismic category I)*
- *ESWPT (seismic category I)*
- *UHSRS (seismic category I)*

COL3.7(4) To prevent non-conservative results, the COL Applicant is to review the resulting level of seismic response and determine appropriate damping values for the site-specific calculations of ISRS that serve as input for the seismic analysis of seismic category I and seismic category II subsystems.

COL3.7(5) The COL Applicant is to assure that the horizontal FIRS defining the site-specific SSE ground motion at the bottom of seismic category I or II basemats envelope the minimum response spectra required by 10 CFR 50, Appendix S, and the site-specific response spectra obtained from the response analysis.

COL3.7(6) The COL Applicant is to develop site-specific GMRS and FIRS by an analysis methodology, which accounts for the upward propagation of the GMRS. The FIRS are compared to the CSDRS to assure that the US-APWR standard plant seismic design is valid for a particular site. If the FIRS are not enveloped by the CSDRS, the US-APWR standard plant seismic design is modified as part of the COLA in order to validate the US-APWR for installation at that site.

COL3.7(7) The COL Applicant is to determine the allowable dynamic bearing capacity based on site conditions, and to evaluate the bearing load to this capacity.

COL3.7(8) The COL Applicant is to institute dynamic testing to evaluate the strain-dependent variation of the material dynamic properties for site materials with initial shear wave velocities below 3,500 ft/s.

COL3.7(9) The COL Applicant is to assure that the design or location of any site-specific seismic category I SSCs, for example buried yard piping or duct banks, will not expose those SSCs to possible impact due to the failure or collapse of non-seismic category I structures, or with any other SSCs that could potentially impact, such as heavy haul route loads, transmission towers, non safety-related storage tanks, etc.

COL3.7(10) It is the responsibility of the COL Applicant to further address structure-to-structure interaction if the specific site conditions can be important for the seismic response of particular US-APWR seismic category I structures, or may result in exceedance of assumed pressure distributions used for the US-APWR standard plant design.

COL3.7(11) It is the responsibility of the COL Applicant to confirm the masses and frequencies of the PCCV polar crane and fuel handling crane and to determine if coupled site-specific analyses are required.

COL3.7(12) It is the responsibility of the COL Applicant to design seismic category I below- or above-ground liquid-retaining metal tanks such that they are enclosed by a tornado missile protecting concrete vault or wall, in order to confine the emergency gas turbine fuel supply.

COL3.7(13) The COL Applicant is to set the value of the OBE that serves as the basis for defining the criteria for shutdown of the plant, according to the site specific conditions.

COL3.7(14) The COL Applicant is to determine from the site-specific geological and seismological conditions if multiple US-APWR units at a site will have essentially the same seismic response, and based on that determination, choose if more than one unit is provided with seismic instrumentation at a multiple-unit site.

COL3.7(15) The COL Applicant is to assure that a time-history analyzer/recorder is provided which has the capability to provide pre-event recording time of 3 seconds minimum and post-event recording time of 5 seconds minimum, and to record at least 25 minutes of sensed motion.

COL3.7(16) The COL Applicant is to verify the site-specific applicability of these monitors, and determine if there is a need for the installation of additional instrumentation for the measurement of the free-field ground motion based on conditions and requirements specific to the site.

COL3.7(17) Deleted

COL3.7(18) It is the responsibility of the COL Applicant to develop a site-specific instrument surveillance program including calibration and testing that complements the US-APWR seismic instrumentation program, and to develop site-specific maintenance and repair procedures that maximize the number of instruments in service during plant operation and shutdown.

COL3.7(19) It is the responsibility of the COL Applicant to provide the site-specific details of the seismic instrumentation implementation plan based on the discussion in Subsections 3.7.4.1 through 3.7.4.5.

COL3.7(20) The COL Applicant is to validate the site-independent seismic design of the standard plant for site-specific conditions, including geological, seismological, and geophysical characteristics, and to develop the site-specific GMRS as free-field outcrop motions on the uppermost in-situ competent material.

COL3.7(21) The COL Applicant is responsible for the seismic design of those seismic category I and seismic category II SSCs that are not part of the US-APWR standard plant.

COL3.7(22) The COL Applicant is required to perform site-specific seismic analyses, including SSI analysis which considers seismic wave transmission incoherence and analysis of the CAV of the seismic input motion, in order to determine if high-frequency exceedances of the CSDRS could be transmitted to SSCs in the plant superstructure with potentially damaging effects.

COL3.7(23) The COL Applicant is to verify that the results of the site-specific SSI analysis for the broadened ISRS and basement walls lateral soil pressures are enveloped by the US-APWR standard design.

COL3.7(24) *The COL Applicant is to verify that the site-specific ratios V/A and AD/V^2 (A, V, D, are PGA, ground velocity, and ground displacement, respectively) are consistent with characteristic values for the magnitude and distance of the appropriate controlling events defining the site-specific uniform hazard response spectra.*

COL3.7(25) *The COL Applicant referencing the US-APWR standard design is required to perform a site-specific SSI analysis for the R/B-PCCV-containment internal structure utilizing the program ACS-SASSI SSI Version 2.2 (Reference 3.7-17) which contains time history input incoherence function capability. The SSI analysis using SASSI is required in order to confirm that site-specific effects are enveloped by the standard design. After the SASSI analysis is first performed for a specific unit, subsequent COLAs for other units may be able to forego SASSI analyses if the FIRS and GMRS derived for those subsequent units are much smaller than the US-APWR standard plant CSDRS, and if the subsequent unit can also provide justification through comparison of site-specific geological and seismological characteristics.*

COL3.7(26) *SSI effects are also considered by the COL Applicant in site-specific seismic design of any seismic category I and II structures that are not included in the US-APWR standard plant. Consideration of structure-to-structure interaction is discussed in Subsection 3.7.2.8. The site-specific SSI analysis is performed for buildings and structures including, but not limited to, to the following:*

- *Seismic category I ESWPT*
- *Seismic category I PSFSV*
- *Seismic category I UHSRS*

COL3.7(27) *It is the responsibility of the COL Applicant to perform any site-specific seismic analysis for dams that may be required.*

COL3.7(28) *The overall basemat dimensions, basemat embedment depths, and maximum height of the US-APWR R/B, PCCV, and containment internal structure on their common basemat are given in Table 3.7.1-3 and as updated by the COL Applicant to include site-specific seismic category I structures.*

COL3.7(29) *Table 3.7.2-1, as updated by the COL Applicant to include site-specific seismic category I structures, presents a summary of dynamic analysis and combination techniques including types of models and computer programs used, seismic analysis methods, and method of combination for the three directional components for the seismic analysis of the US-APWR standard plant seismic category I buildings and structures.*

COL 3.7(30) The COL Applicant is to provide site-specific design ground motion time histories and durations of motion.

3.7.6 References

3.7-1 General Design Criteria for Nuclear Power Plants, Domestic Licensing of Production and Utilization Facilities, Energy. Title 10 Code of Federal Regulations, Part 50, Appendix A, U.S. Nuclear Regulatory Commission, Washington, DC.

3.7-2 Identification and Characterization of Seismic Sources and Determination of Safe Shutdown Earthquake Ground Motion, Regulatory Guide 1.165, U.S. Nuclear Regulatory Commission, March, 1997.

3.7-3 A Performance-Based Approach to Define the Site-Specific Earthquake Ground Motion, Regulatory Guide 1.208, Rev. 0, U.S. Nuclear Regulatory Commission, Washington, DC, March 2007.

3.7-4 Reactor Site Criteria, Energy. Title 10 Code of Federal Regulations Part 100, U.S. Nuclear Regulatory Commission, Washington, DC.

3.7-5 Standard Design Certifications, Early Site Permits; Standard Design Certifications; and Combined Licenses for Nuclear Power Plants, Energy. Title 10 Code of Federal Regulations Part 52, Subpart B, U.S. Nuclear Regulatory Commission, Washington, DC.

3.7-6 Design Response Spectra for Seismic Design of Nuclear Power Plants. United States Nuclear Regulatory Commission, Regulatory Guide 1.60, Rev. 1, U.S. Nuclear Regulatory Commission, Washington, DC, December 1973.

3.7-7 Earthquake Engineering Criteria for Nuclear Power Plants, Domestic Licensing of Production and Utilization Facilities, Energy. Title 10 Code of Federal Regulations Part 50, Appendix S, Part IV(a)(1)(i), U.S. Nuclear Regulatory Commission, Washington, DC.

3.7-8 Vibratory Ground Motion, Standard Review Plan for the Review of Safety Analysis Reports for Nuclear Power Plants. NUREG 0800, SRP 2.5.2, Rev. 4, U.S. Nuclear Regulatory Commission, Washington, DC, March 2007.

3.7-9 Seismic Analysis of Safety-Related Nuclear Structures, American Society of Civil Engineers, ASCE 4-98, Reston, VA, 2000.

3.7-10 Seismic Design Parameters, Standard Review Plan for the Review of Safety Analysis Reports for Nuclear Power Plants. NUREG-0800, SRP 3.7.1, Rev.3, United States Nuclear Regulatory Commission, March 2007.

3.7-11 Components and Core Support Structures, ASME Code, Section III, Class 1, 2, and 3, American Society of Mechanical Engineers, 2001 Edition thru 2003 Addenda.

3.7-12 United States Nuclear Regulatory Commission Staff Requirement Memorandum SECY-93-087, Policy, Technical, and Licensing Issues Pertaining to Evolutionary and Advanced Light-Water Reactor (ALWR) Designs, James M. Taylor, Executive Director of Operations, April 2, 1993.

3.7-13 IEEE Recommended Practice for Seismic Qualification of Class 1E Equipment for Nuclear Power Generating Stations, IEEE Std 344-2004, Appendix D, Institute of Electrical and Electronic Engineers Power Engineering Society, New York, New York, June 2005.

3.7-14 McGuire, R.K., Silva, W.J., and Costantino, C.J. Technical Basis for Revision of Regulatory Guidance on Design Ground Motions: Hazard- and Risk-Consistent Ground Motion Spectra Guidelines, NUREG/CR-6728, U.S. Nuclear Regulatory Commission, Washington, DC, October 2001.

3.7-15 Damping Values for Seismic Design of Nuclear Power Plants, Regulatory Guide 1.61, Rev.1, U.S. Nuclear Regulatory Commission, Washington, DC, March 2007.

3.7-16 Seismic System Analysis, Standard Review Plan for the Review of Safety Analysis Reports for Nuclear Power Plants. NUREG-0800, SRP 3.7.2, Rev.3, United States Nuclear Regulatory Commission, March 2007.

3.7-17 An Advanced Computational Software for 3D Dynamic Analysis Including Soil-Structure Interaction, ACS SASSI PREP User's Guide, Revision 2, for ACS SASSI, Version 2.2, Ghiocel Predictive Technologies, Inc. Pittsford, NY.

3.7-18 Dynamic Analysis of the Coupled RCL-R/B-PCCV-CIS Lumped Mass Stick Model, MUAP-08005, Mitsubishi Heavy Industries, Ltd., April 2008.

3.7-19 Design Guidance For Radioactive Waste Management Systems, Structures, and Components Installed in Light-Water-Cooled Nuclear Power Plants, Regulatory Guide 1.143, Rev.2, U.S. Nuclear Regulatory Commission, Washington, DC, November 2001.

3.7-20 NASTRAN, Femap with NX NASTRAN, Version 9.3.

3.7-21 ANSYS, Advanced Analysis Techniques Guide, Release 11.0, ANSYS, Inc., 2007

3.7-22 Rules for Construction of Overhead and Gantry Cranes (Top Running Bridge, Multiple Girder), American Society of Mechanical Engineers, ASME-NOG-1 (i.e., Nuclear Overhead Gantry), New York, 1995.

3.7-23 Quality Assurance Requirements for Nuclear Facility Applications, The American Society of Mechanicals Engineers, NQA-1-2004, New York, New York, December 2004.

3.7-24 Minimum Design Loads for Buildings and Other Structures, American Society of Civil Engineers/Structural Engineering Institute, ASCE/SEI 7-05, Reston, VA, 2006.

3.7-25 IEEE Recommended Practice for Seismic Qualification of Class 1E Equipment for Nuclear Power Generating Stations, IEEE Std 344-1987, The Institute of Electrical and Electronics Engineers, Inc, New York, New York, 1987.

3.7-26 Development of Floor Design Response Spectra for Seismic Design of Floor-Supported Equipment or Components, Regulatory Guide 1.122, Rev.1, U.S. Nuclear Regulatory Commission, Washington, DC, February 1978.

3.7-27 Combining Responses and Spatial Components in Seismic Response Analysis, Regulatory Guide 1.92, Rev.2, U.S. Nuclear Regulatory Commission, Washington, DC, July 2006.

3.7-28 Combining Responses and Spatial Components in Seismic Response Analysis, Regulatory Guide 1.92, Rev.1, U.S. Nuclear Regulatory Commission, Washington, DC, February 1976.

3.7-29 PEPIPESTRESS Theory Manual, Rev.0, May 1988.

3.7-30 International Building Code, International Building Code Council, Inc., Country Club Hills, IL, 2006.

3.7-31 Code Requirements for Nuclear Safety-Related Concrete Structures, ACI 349-01, American Concrete Institute, 2001.

3.7-32 Specification for the Design, Fabrication and Erection of Steel Safety-Related Structures for Nuclear Facilities, ANSI/AISC N690-1994 including Supplement 2 (2004), American National Standards Institute/American Institute of Steel Construction, 1994 & 2004.

3.7-33 Enhanced Information for PS/B Design, MUAP-08002, Mitsubishi Heavy Industries, Ltd., February 2008.

3.7-34 Foundations, Standard Review Plan for the Review of Safety Analysis Reports for Nuclear Power Plants. NUREG-0800, SRP 3.8.5, Rev.2, U.S. Nuclear Regulatory Commission, Washington, DC, March 2007.

3.7-35 Seismic Subsystem Analysis, Standard Review Plan for the Review of Safety Analysis Reports for Nuclear Power Plants. NUREG-0800, United States Nuclear Regulatory Commission Standard Review Plan 3.7.3, Revision 3, March 2007.

3.7-36 Hyde, S.J., J.M. Pandya, and K.M. Vashi, Seismic Analysis of Auxiliary Mechanical Equipment in Nuclear Plants, Dynamic and Seismic Analysis of Systems and Components, ASME-PVP-65, American Society of Mechanical Engineers, Orlando, Florida, 1982.

3.7-37 Lin, C.W., T.C. Esselman, Equivalent Static Coefficients for Simplified Seismic Analysis of Piping Systems, SMIRT Conference 1983, Paper K12/9.

3.7-38 Independent Support Motion (ISM) Method of Modal Spectra Seismic Analysis, Task Group on Independent Support Motion as Part of the PVRC Technical Committee on Piping Systems, December 1989.

3.7-39 Seismic Instrumentation, Standard Review Plan for the Review of Safety Analysis Reports for Nuclear Power Plants. NUREG-0800, United States Nuclear Regulatory Commission Standard Review Plan 3.7.4, Revision 2, March 2007.

3.7-40 Nuclear Power Plant Instrumentation for Earthquakes, Regulatory Guide 1.12, Rev.2, U.S. Nuclear Regulatory Commission, Washington, DC, March 1997.

3.7-41 Pre-Earthquake Planning and Immediate Nuclear Power Plant Operator Post-Earthquake Actions, Regulatory Guide 1.166, U.S. Nuclear Regulatory Commission, Washington, DC, March 1997.

3.7-42 Standardization of the Cumulative Absolute Velocity, Electric Power Research Institute TR-100082, December 1991.

3.7-43 A Criterion for Determining Exceedance of the Operating Basis Earthquake, Electric Power Research Institute NP-5930, July 1988.

3.7-44 Information Relevant to Ensuring that Occupational Radiation Exposures at Nuclear Power Stations Will Be as Low as Is Reasonably Achievable, Regulatory Guide 8.8, Rev.3, U.S. Nuclear Regulatory Commission, Washington, DC, June 1978.

3.7-45 Guidelines for Nuclear Plant Response to an Earthquake, Electric Power Research Institute NP-6695, December 1989.

Table 3.7.1-1 CSDRS Horizontal Acceleration Values and Control Points

Control Point (Hz)	Acceleration (g)
0.5% Damping	
A (50)	0.3
B (12)	1.49
C (2.5)	1.79
D (0.25)	0.22
2% Damping	
A (50)	0.3
B (12)	1.06
C (2.5)	1.28
D (0.25)	0.17
5% Damping	
A (50)	0.3
B (12)	0.78
C (2.5)	0.94
D (0.25)	0.14
7% Damping	
A (50)	0.3
B (12)	0.68
C (2.5)	0.82
D (0.25)	0.13
10% Damping	
A (50)	0.3
B (12)	0.57
C (2.5)	0.68
D (0.25)	0.12

Notes:

1. 0.3 g PGA
2. Based on RG 1.60, Rev. 1 (Reference 3.7-6) amplification factors
3. For Control Point D, acceleration is computed as follows:

Acceleration $= (\varpi^2 D / 386.4 \text{ in/sec}^2) \times F_A \times 0.3$

ϖ = 2π x frequency (rad/sec)

D = Displacement (in)

F_A = Amplification Factor from Regulatory Guide 1.60

Table 3.7.1-2 CSDRS Vertical Acceleration Values and Control Points

Control Point	(Hz)	Acceleration (g)
0.5% Damping		
A	(50)	0.3
B	(12)	1.49
C	(3.5)	1.70
D	(0.25)	0.15
2% Damping		
A	(50)	0.3
B	(12)	1.06
C	(3.5)	1.22
D	(0.25)	0.12
5% Damping		
A	(50)	0.3
B	(12)	0.78
C	(3.5)	0.89
D	(0.25)	0.094
7% Damping		
A	(50)	0.3
B	(12)	0.68
C	(3.5)	0.78
D	(0.25)	0.086
10% Damping		
A	(50)	0.3
B	(12)	0.57
C	(3.5)	0.65
D	(0.25)	0.08

Notes:

1. 0.3 g PGA
2. Based on RG 1.60, Rev. 1 (Reference 3.7-6) amplification factors
3. For Control Point D, acceleration is computed as follows:

$$\text{Acceleration} = (\varpi^2 D / 386.4 \text{ in/sec}^2) \times F_A \times 0.3$$

ϖ = 2π x frequency (rad/sec)

D = Displacement (in)

F_A = Amplification Factor from Regulatory Guide 1.60

Table 3.7.1-3 Major Dimensions of Seismic Category I Structures

Structure	Basemat Embedment Depth Below Grade (ft)	Basemat Width and Length (ft)	Max. Structure Height
R/B	26'-8"/38'-10"	210' x 309'(3)	190' - 9"
PCCV	See note 2.	See note 2.	268' - 3"
Containment Internal Structure	See note 2.	See note 2.	139' - 6" (top of pressurizer compartment)
PS/B	37'-3"	71' x 117'	51'-11"

Notes:

1. The dimensions shown are approximate and are based on the general arrangement drawings in Section 1.2.

2. The R/B, PCCV, and containment internal structure rest on a common basemat as shown on the general arrangement drawings in Section 1.2.

3. Width and height are the distances between column lines of exterior walls.

Table 3.7.1-4 Comparison of 5% Damping ARS of Artificial Time Histories with 5% damping CSDRS

Time History	Frequency Range		0.25 – 1 Hz	1 – 10 Hz	10 – 100 Hz	0.25 – 100 Hz
	No. Freq. Data Points		**75**	**100**	**100**	**275**
H1 Horizontal	ARS/CSDRS ratio	Min.	0.894	0.942	0.993	0.894
		Max	1.105	1.121	1.166	1.166
	Max. No. of Data Point Non-Exceedances Within Any One Particular Frequency Window (1)		10	2	1	10
H2 Horizontal	ARS/CSDRS ratio	Min.	0.888	0.958	0.994	0.888
		Max	1.232	1.173	1.141	1.232
	Max. No. of Data Point Non-Exceedances Within Any One Particular Frequency Window (1)		10	2	1	10
V Vertical	ARS/CSDRS ratio	Min.	0.877	0.901	1.000	0.877
		Max	1.215	1.165	1.296	1.296
	Max. No. of Data Point Non-Exceedances Within Any One Particular Frequency Window (1)		7	4	0	7

Note:

1. Maximum number of frequency data points in any one particular sequence (frequency window) for which the acceleration values of the time histories ARS are below those of the CSDRS. See Subsection 3.7.1.1 for further discussion of the non-exceedances shown above.

Table 3.7.1-5 Duration of Motion of US-APWR Artificial Time Histories with Respect to Arias Intensity

	Arias Intensity		Duration (seconds)
	Time for 5% (seconds)	Time for 75% (seconds)	
H1	2.71	11.55	8.84
H2	2.14	11.25	9.12
V	1.84	11.20	9.36

Table 3.7.2-1 Summary of Dynamic Analysis and Combination Techniques

Summary of Dynamic Analyses & Combination Techniques				
Model	**Analysis Method**	**Program**	**Three Components Combination (for purposes of dynamic analysis)**	**Modal Combination**
Three-dimensional R/B-PCCV-containment internal structure Lumped Mass Stick Model (4)	Direct Integration Time History Analysis	ANSYS	SRSS	N/A
Three-dimensional R/B-PCCV-containment internal structure FE Model (1)	Time History Analysis in Frequency Domain	NASTRAN	N/A (1)	N/A
Three-dimensional RCL Piping FE Model (2)	Direct Integration Time History Analysis	ANSYS	SRSS	N/A
Three-dimensional PS/Bs Lumped Mass Stick Models (3)	Direct Integration Time History Analysis	ANSYS	SRSS	N/A
Three-dimensional RCL-R/B-PCCV-containment internal structure Lumped Mass Stick Model	Direct Integration Time History Analysis	ANSYS	SRSS	N/A

Notes:

1. The FE model for the R/B-PCCV-containment internal structure on their common basemat is used only for validation of the dynamic lumped mass stick models and for static analysis for design of structural members and components as addressed in Section 3.8.
2. The FE model for the RCL is addressed in a Technical Report (Reference 3.7-18).
3. The lumped mass stick models for the PS/Bs are addressed in a Technical Report (Reference 3.7-33).
4. Three-dimensional RCL-R/B-PCCV-containment internal structure lumped mass stick models are addressed in a Technical Report (Reference 3.7-18).

Table 3.7.2-2 Concrete Material Constants

	Modulus of Elasticity (Young's Modulus) E_c (ksi)	Shear Modulus G_c (ksi)	Poisson's Ratio ν_c	Remark
PCCV	4,769	2,040	0.17	f'_c = 7,000 psi
R/B	3,605	1,540	0.17	f'_c = 4,000 psi
Containment Internal Structure	3,605	1,540	0.17	f'_c = 4,000 psi

Table 3.7.2-3 Seismic SSI Analysis Cases

Case No.	Soil Properties				Input Earthquake (SSE) Time Histories		
	Soft	Medium 1	Medium 2	Fixed Base	H1	H2	V
1	√				√	√	√
2		√			√	√	√
3			√		√	√	√
4				√	√	√	√

Table 3.7.3-1(a) SSE Damping Values

Welded aluminum structures (%)	4
Welded and friction-bolted steel structures and equipment (%)	4
Bearing bolted structures and equipment (%)	7
Prestressed concrete structures (%)	5
Reinforced concrete structures (%)	7
Steel-Concrete Modules (%)	5
Piping systems(1)	4
Full cable trays & related supports (%)	10(2)
Empty cable trays and related supports (%)	7
Conduits & related supports (%)	7
HVAC pocket lock ductwork (%)	10
HVAC companion angle ductwork (%)	7
HVAC welded ductwork (%)	4
Cabinets and panels for electrical equipment (%)	3
Equipment such as welded instrument racks and tanks (impulsive mode) (%)	3(3)
Motors, fans, housings, pressure vessels, heat exchangers, pumps, valve bodies (%)	3

Table 3.7.3-1(b) OBE Damping Values

Welded aluminum structures (%)	3
Welded and friction-bolted steel structures and equipment (%)	3
Bearing bolted structures and equipment (%)	5
Prestressed concrete structures (%)	3
Reinforced concrete structures (%)	4
Steel Concrete Modules (%)	4
Piping systems(1)	3
Full cable trays & related supports (%)	7(2)
Empty cable trays and related supports (%)	5
Conduits & related supports (%)	5
HVAC pocket lock ductwork (%)	7
HVAC companion angle ductwork (%)	5
HVAC welded ductwork (%)	3
Cabinets and panels for electrical equipment (%)	2
Equipment such as welded instrument racks and tanks (impulsive mode)(%)	2(3)

Motors, fans, housings, pressure vessels, heat exchangers, pumps, valve bodies (%)	2

Notes for Tables 3.7.3-1(a) and 3.7.3-1(b):

1. As an alternative for response spectrum analyses using an envelope of the SSE or OBE response spectra at all support points (uniform support motion), frequency-dependent damping values shown in the graph below may be used, subject to the following restrictions:
   - Frequency-dependent damping should be used completely and consistently, if at all. Damping values for equipment other than piping are to be consistent with the values in the above table and RG 1.61 (Reference 3.7-15).
   - Use of the specified damping values is limited only to response spectral analyses. Acceptance of the use of the specified damping values with other types of dynamic analyses (e.g., time-history analyses or independent support motion method) requires further justification.
   - When used for reconciliation or support optimization of existing designs, the effects of increased motion on existing clearances and online mounted equipment should be checked.
   - Frequency-dependent damping is not appropriate for analyzing the dynamic response of piping systems using supports designed to dissipate energy by yielding.
   - Frequency-dependent damping is not applicable to piping in which stress corrosion cracking has occurred, unless a case-specific evaluation is provided and reviewed, and found acceptable by the NRC staff.

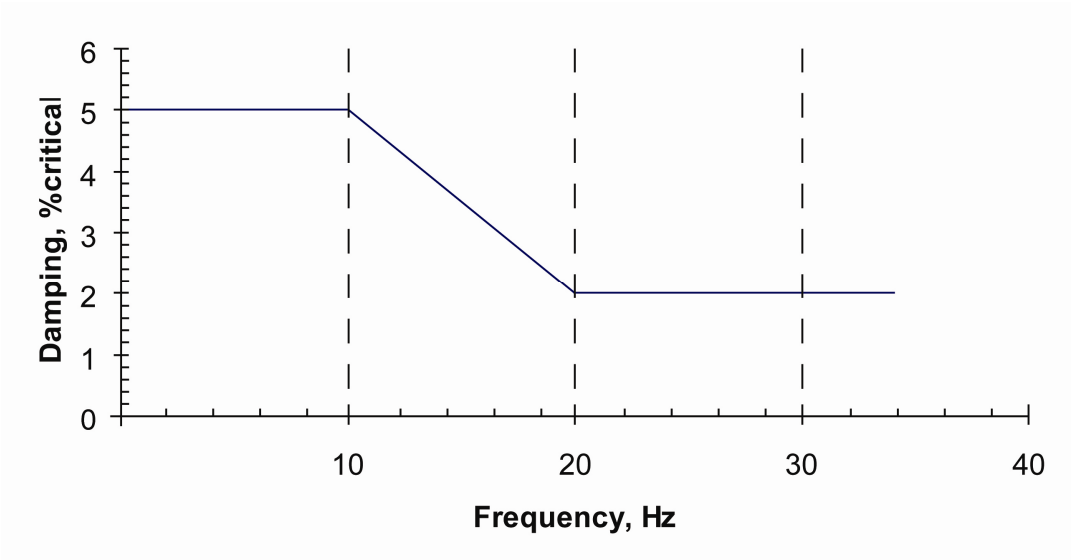

2. The use of higher damping values for cable trays with flexible support systems (e.g., rod-hung trapeze systems, strut-hung trapeze systems, and strut-type cantilever and braced cantilever support systems) is permissible, subject to obtaining NRC review for acceptance on a case-by-case basis.
3. Use 0.5% damping for sloshing mode for tanks

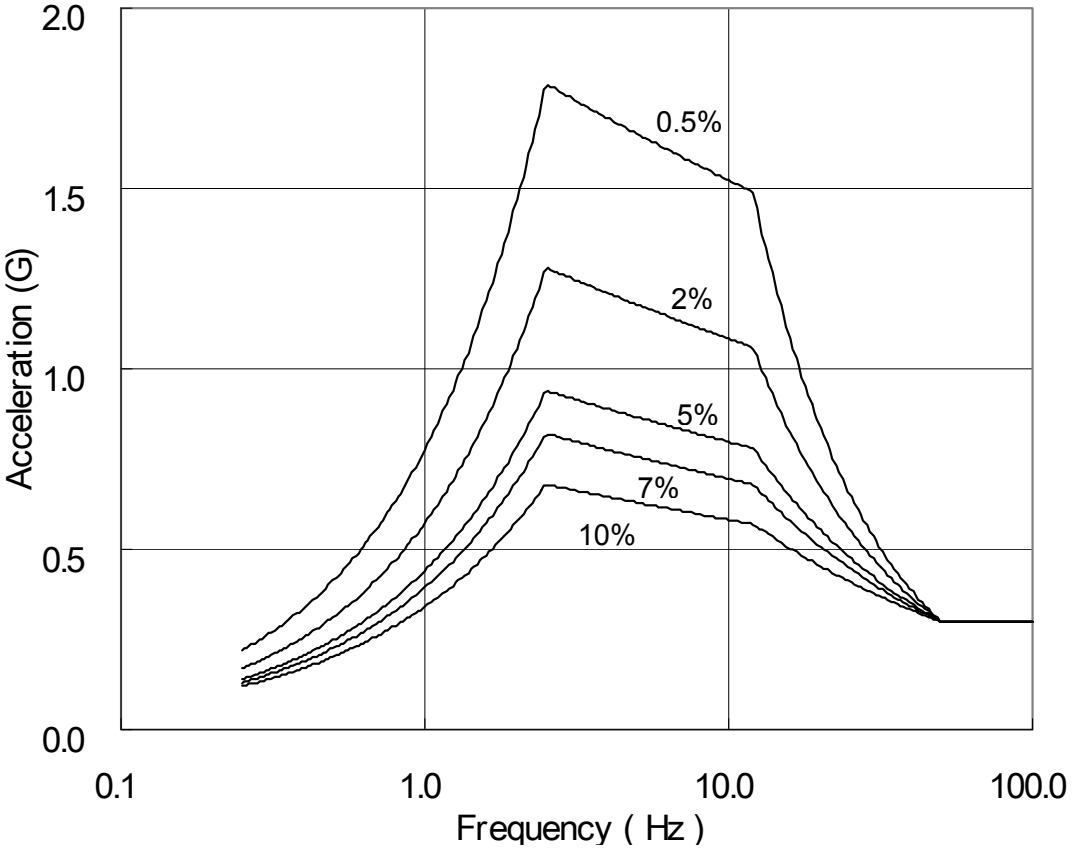

Note: spectra for damping 0.5, 2, 5, 7, 10%.

Figure 3.7.1-1 US–APWR Horizontal CSDRS

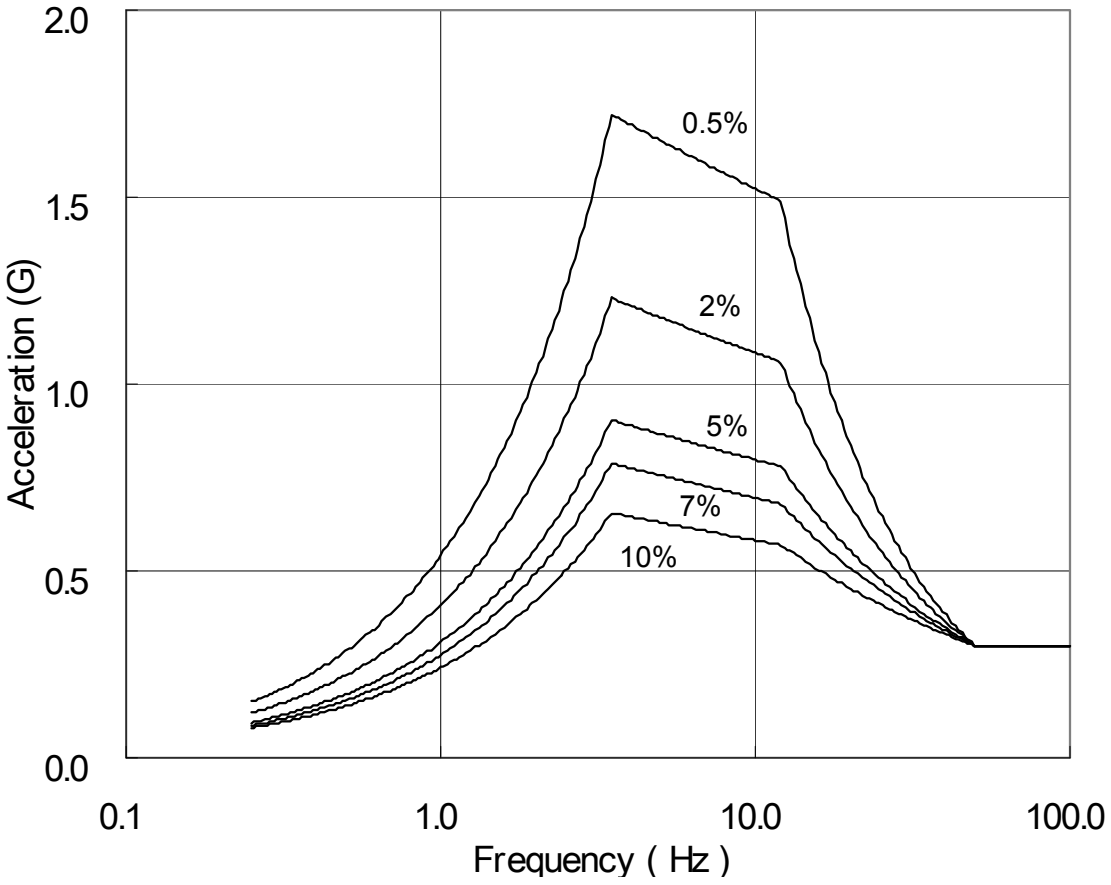

Note: spectra for damping 0.5, 2, 5, 7, 10%.

Figure 3.7.1-2 US–APWR Vertical CSDRS

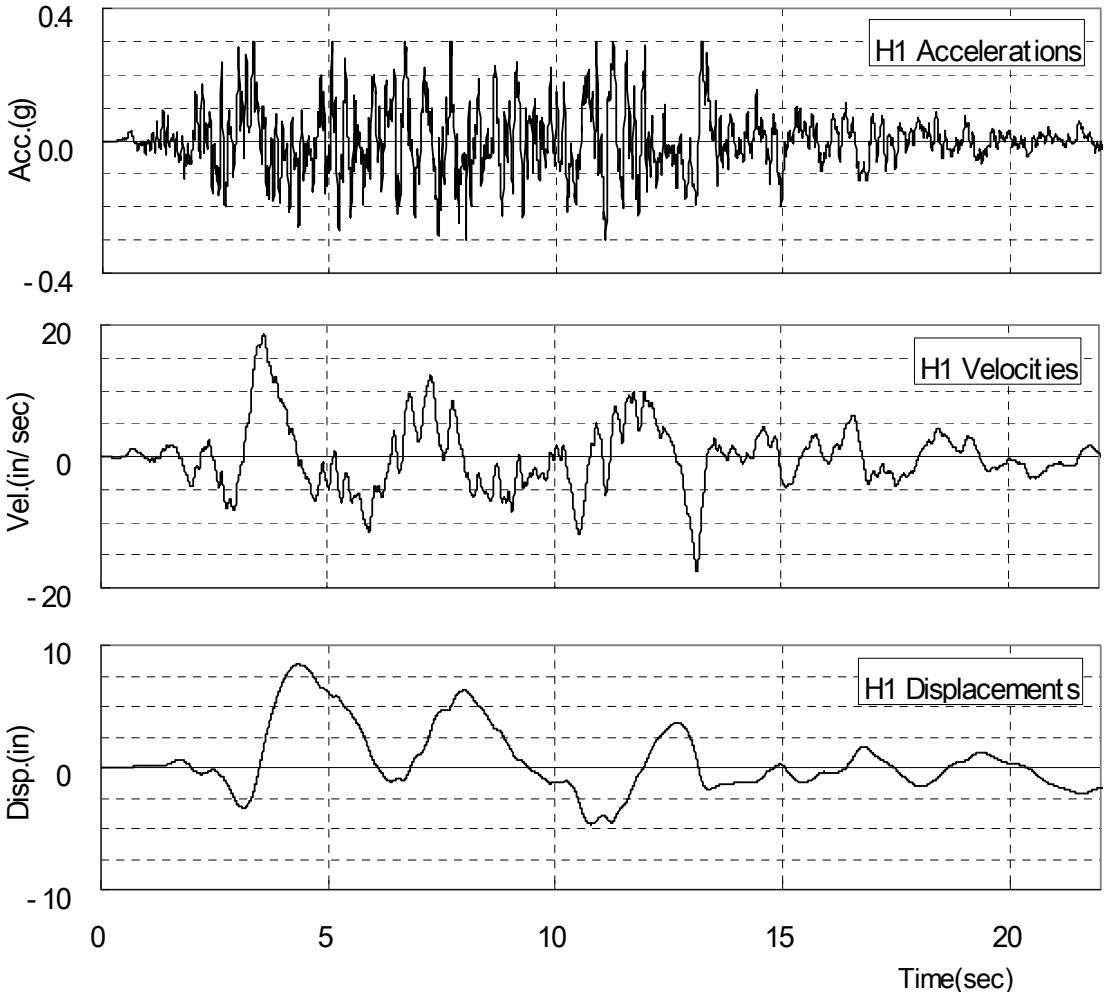

Figure 3.7.1-3 Artificial Time Histories Plots (H1)

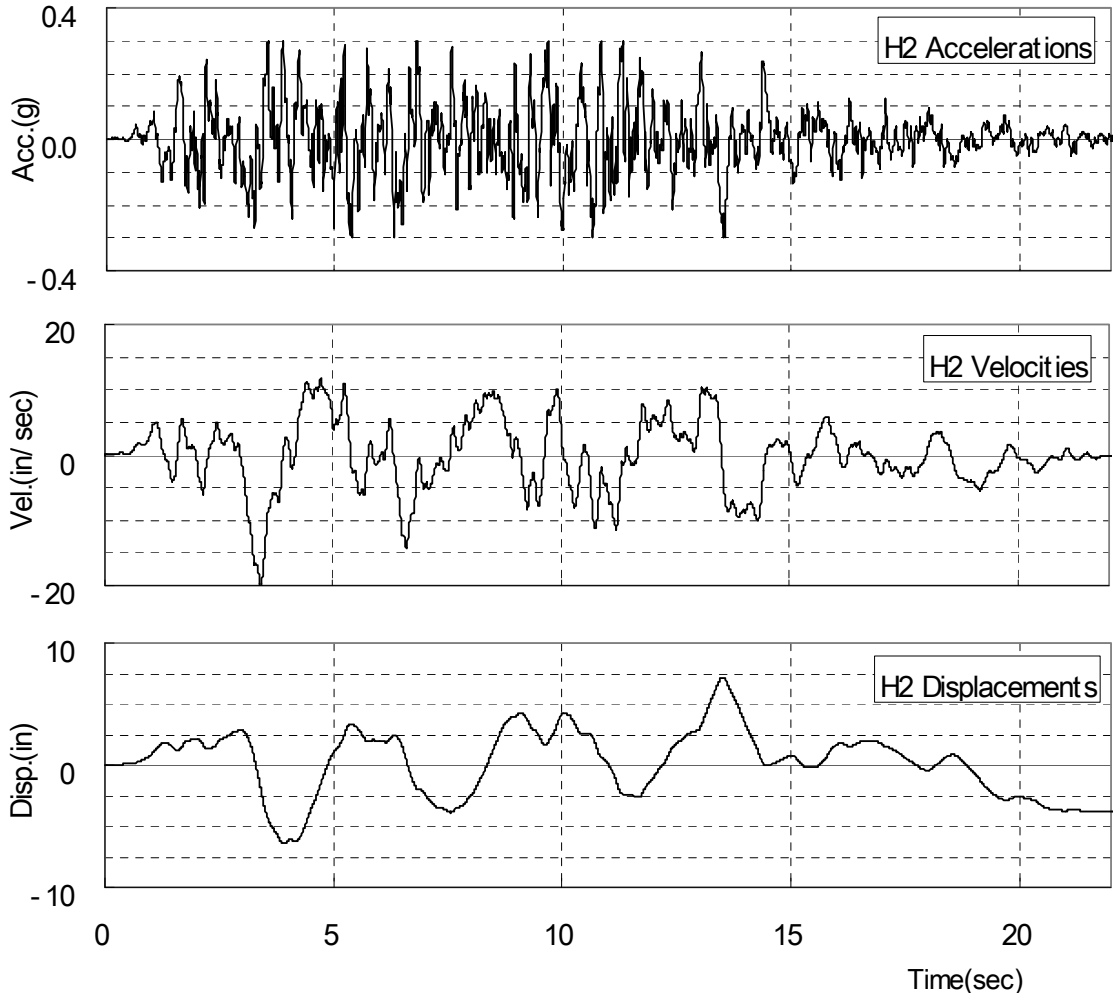

Figure 3.7.1-4 Artificial Time Histories Plots (H2)

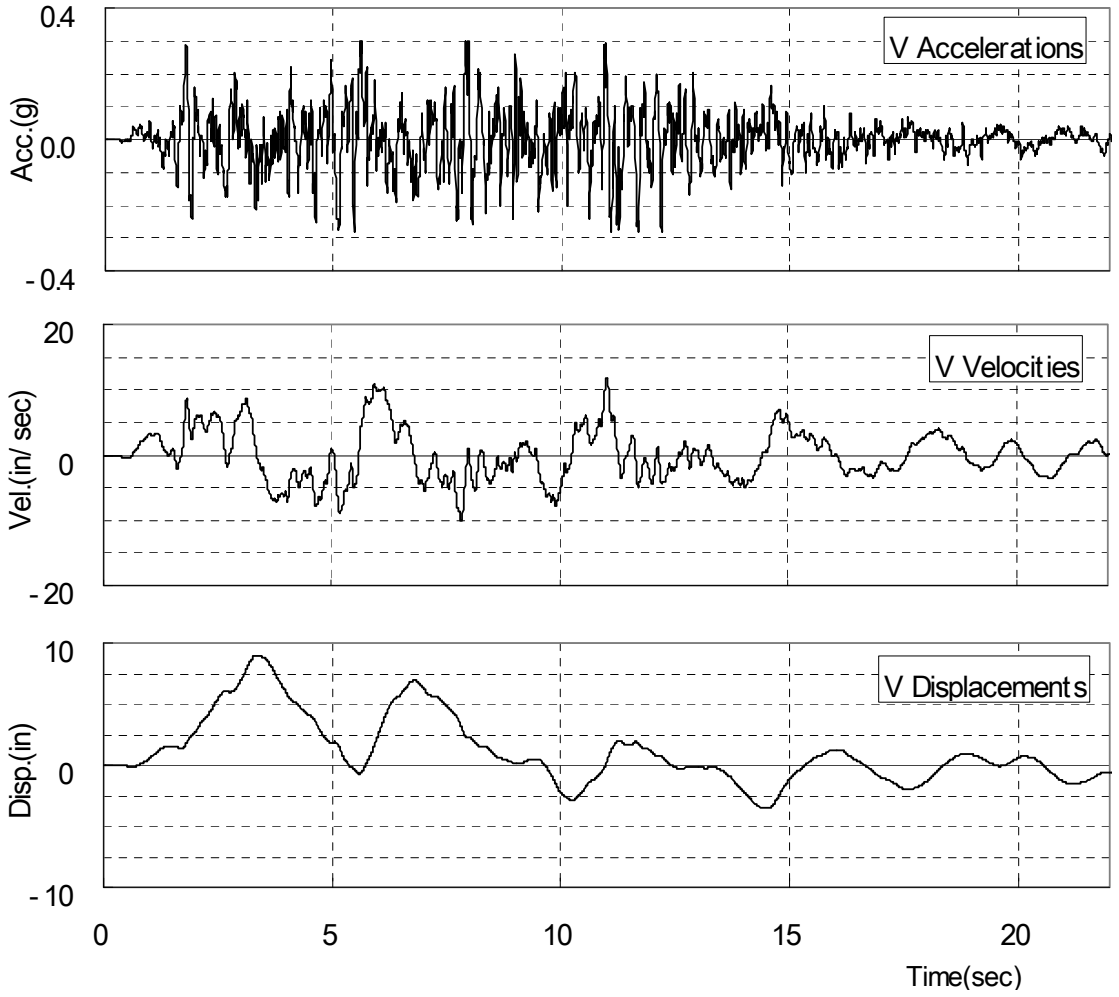

Figure 3.7.1-5 Artificial Time Histories Plots (V)

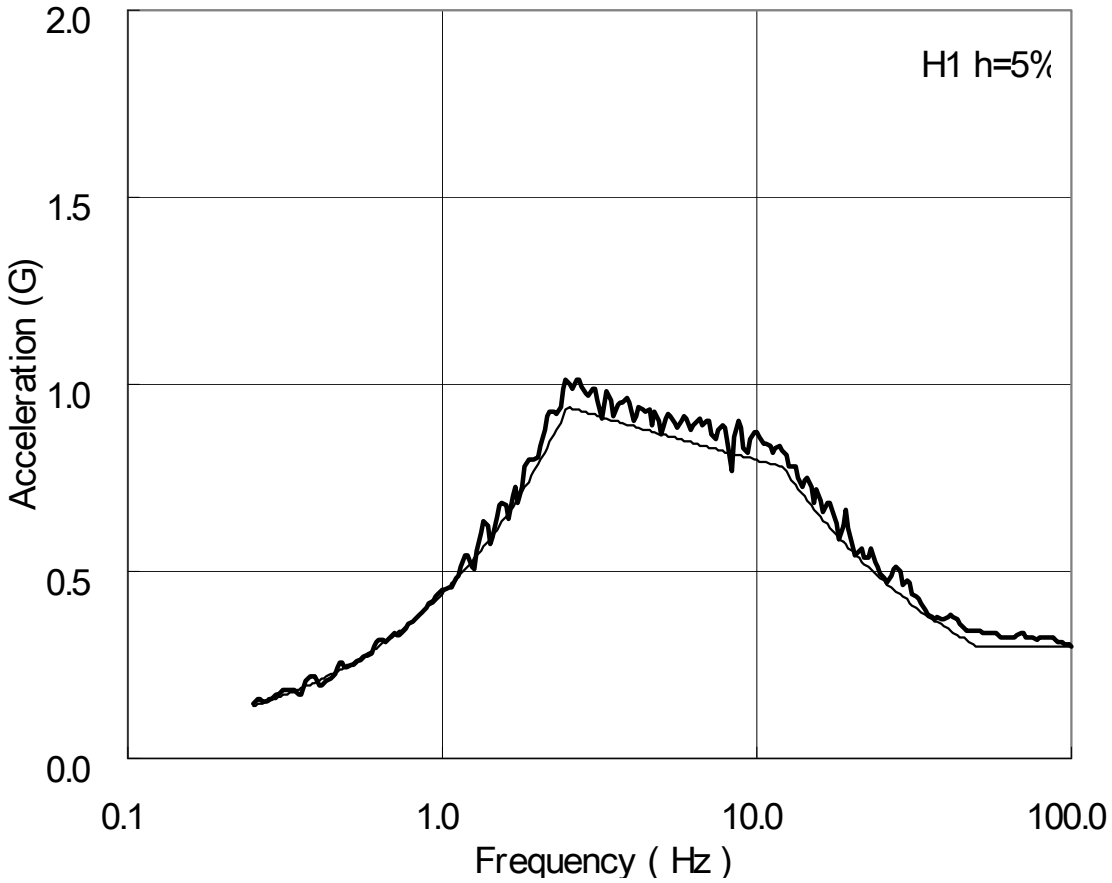

Note: Plot is for 5% damping. For comparison purposes the CSDRS for the north-south direction (H1) is also shown.

Figure 3.7.1-6 Artificial Time History Response Spectra (H1)

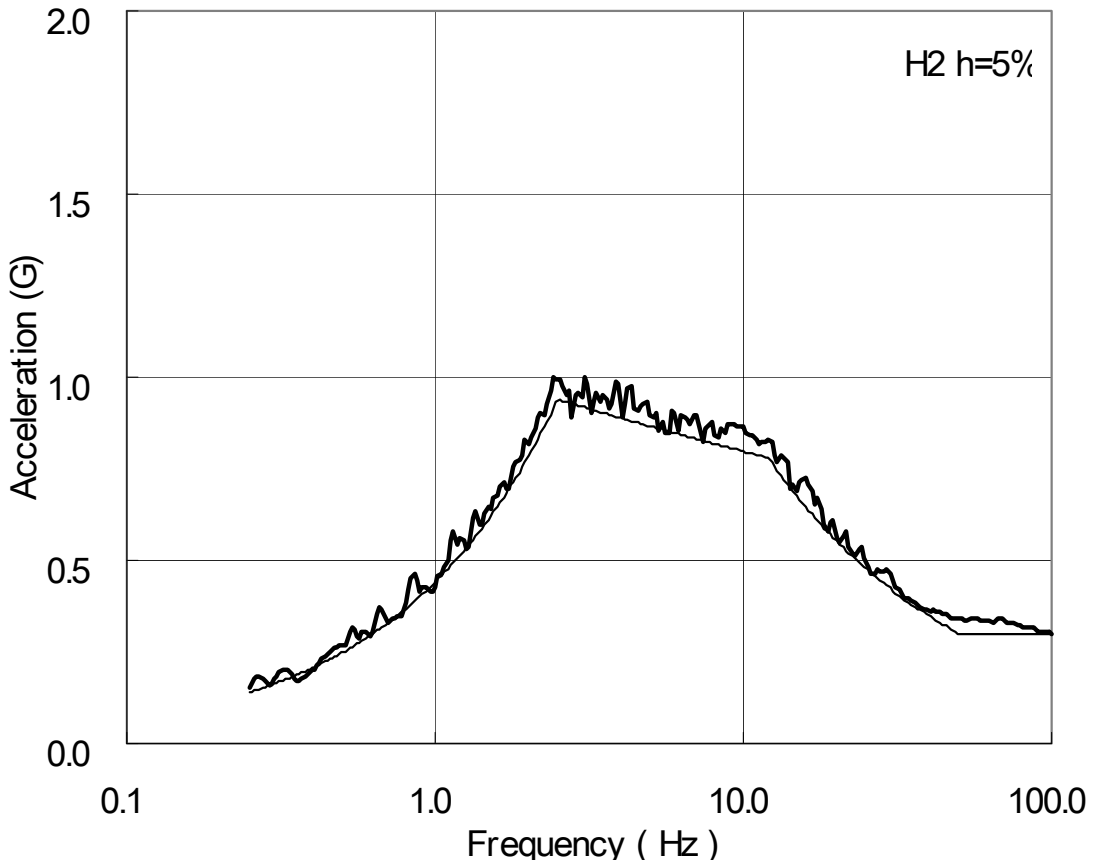

Note: Plot is for 5% damping. For comparison purposes the CSDRS for the east-west direction (H2) is also shown.

Figure 3.7.1-7 Artificial Time History Response Spectra (H2)

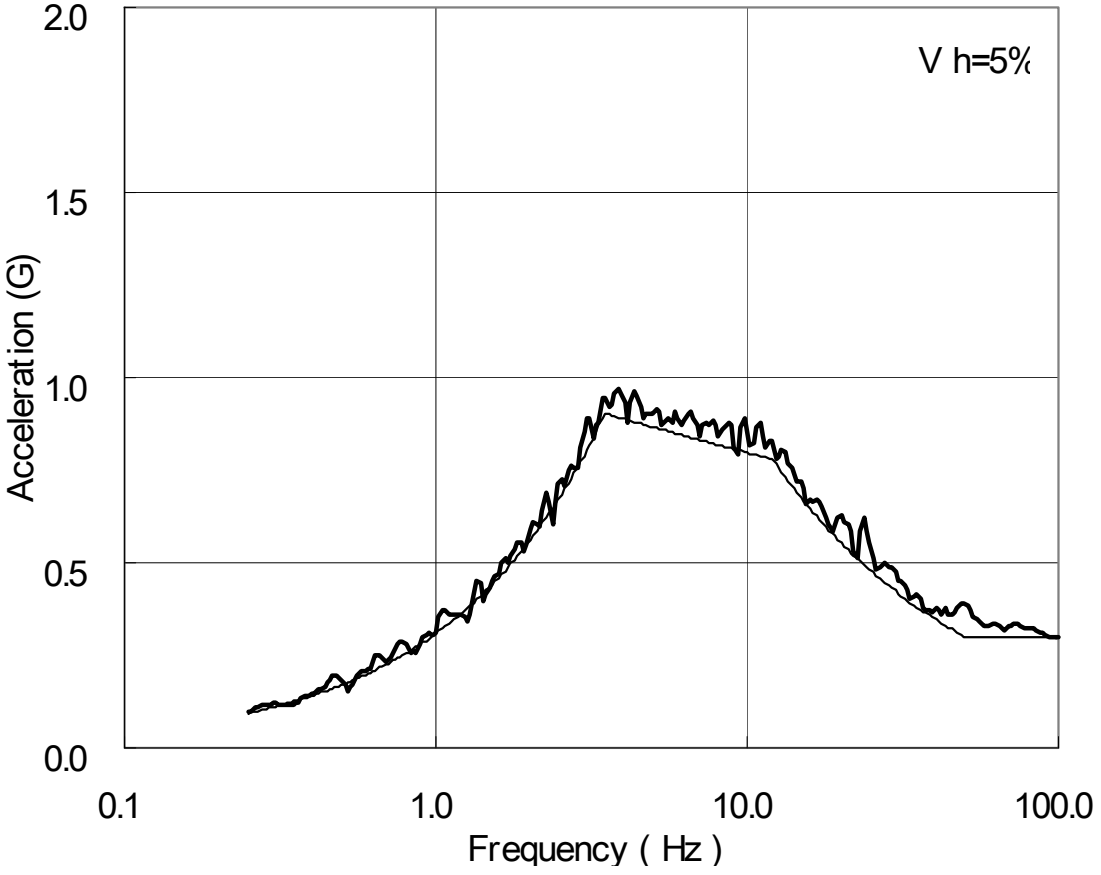

Note: Plot is for 5% damping. For comparison purposes the CSDRS for vertical direction (V) is also shown.

Figure 3.7.1-8 Artificial Time History Response Spectra (V)

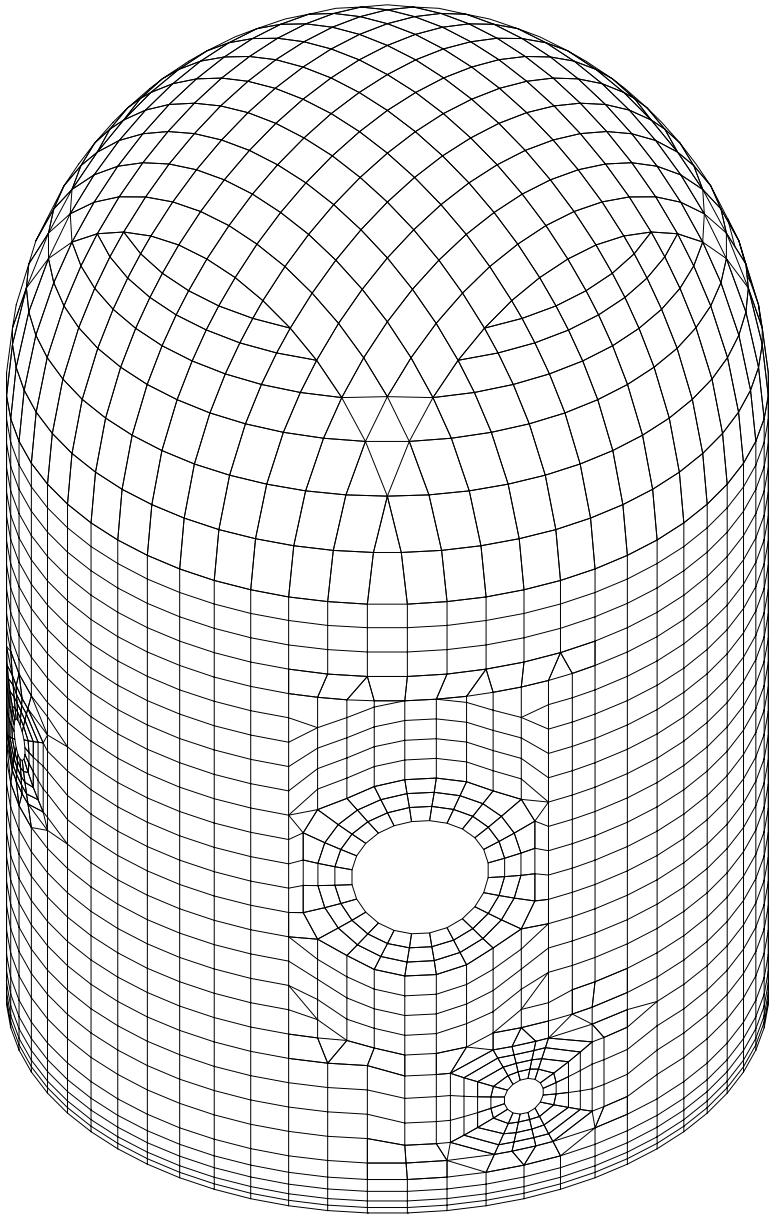

Note: Only PCCV Superstructure is shown

Figure 3.7.2-1 FE Model of PCCV

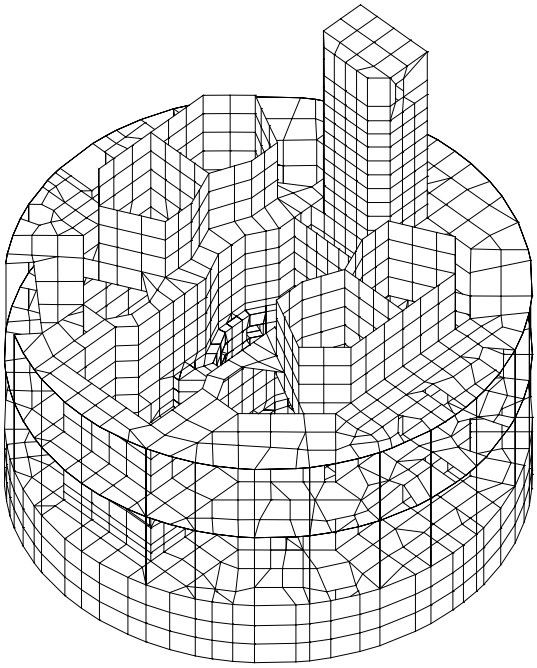

(Whole View)

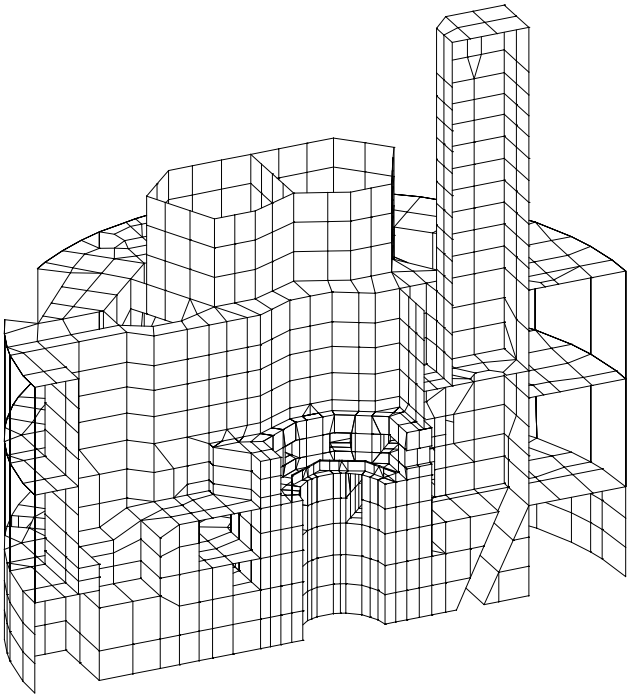

Figure 3.7.2-2 Containment Internal Structure FE Model

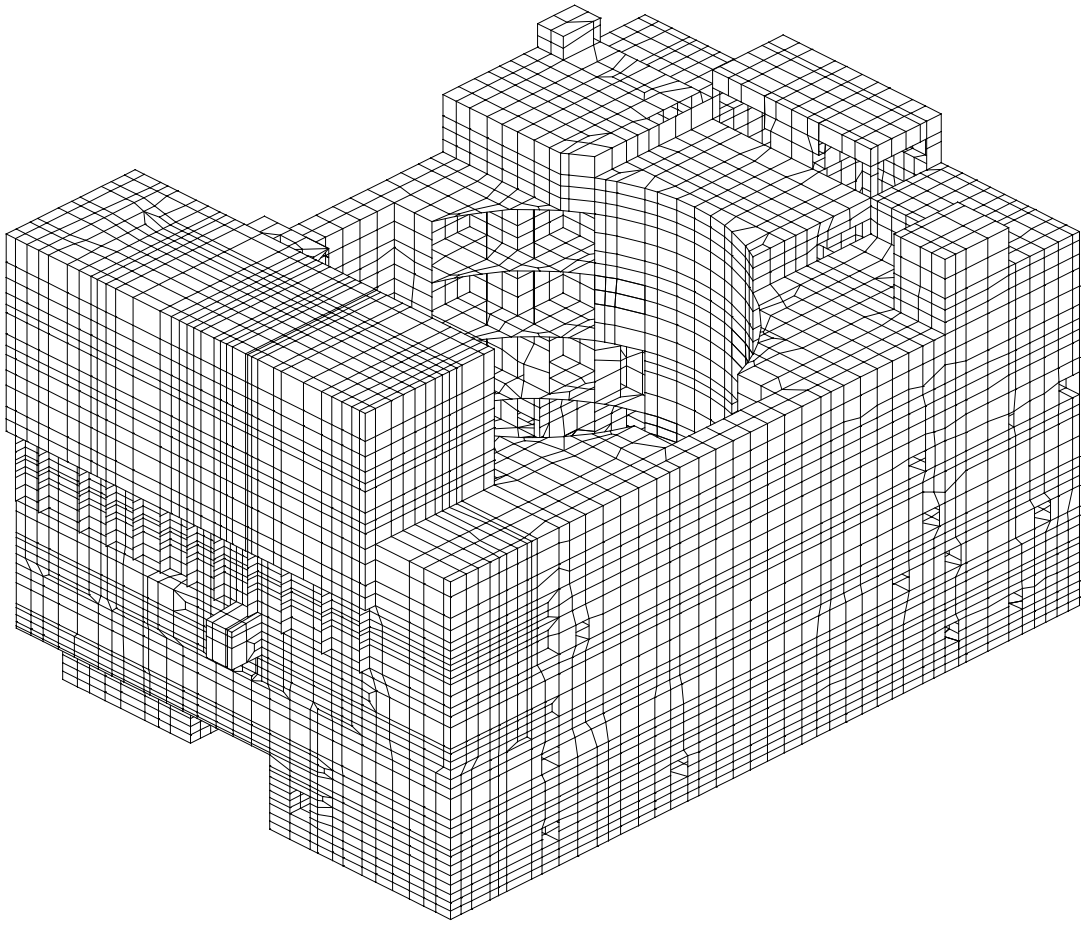

Note: This figure shows an R/B isometric view looking from the northwest

Figure 3.7.2-3 FE Model of R/B on Common Basemat

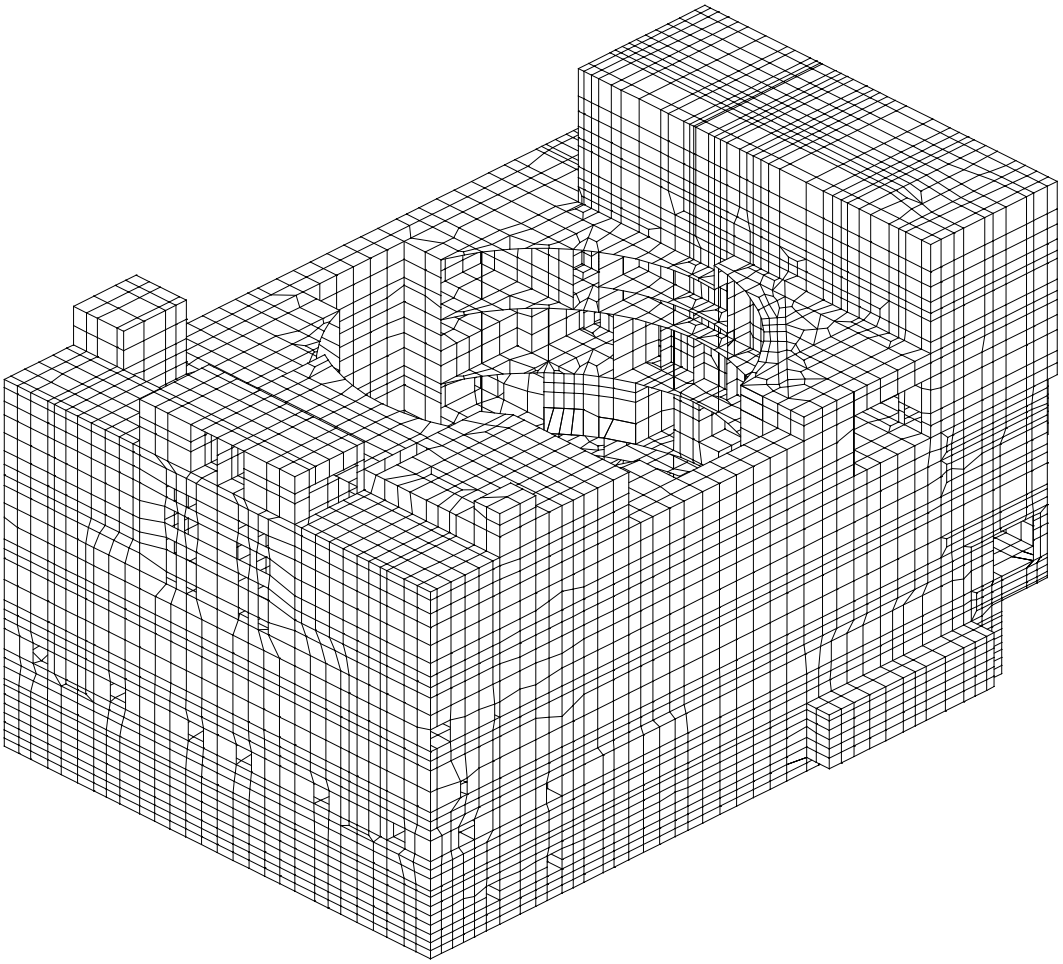

Note: This figure shows a R/B isometric view looking from the southeast

Figure 3.7.2-4 FE Model of R/B on Common Basemat

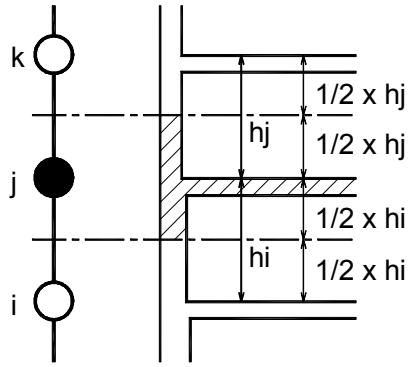

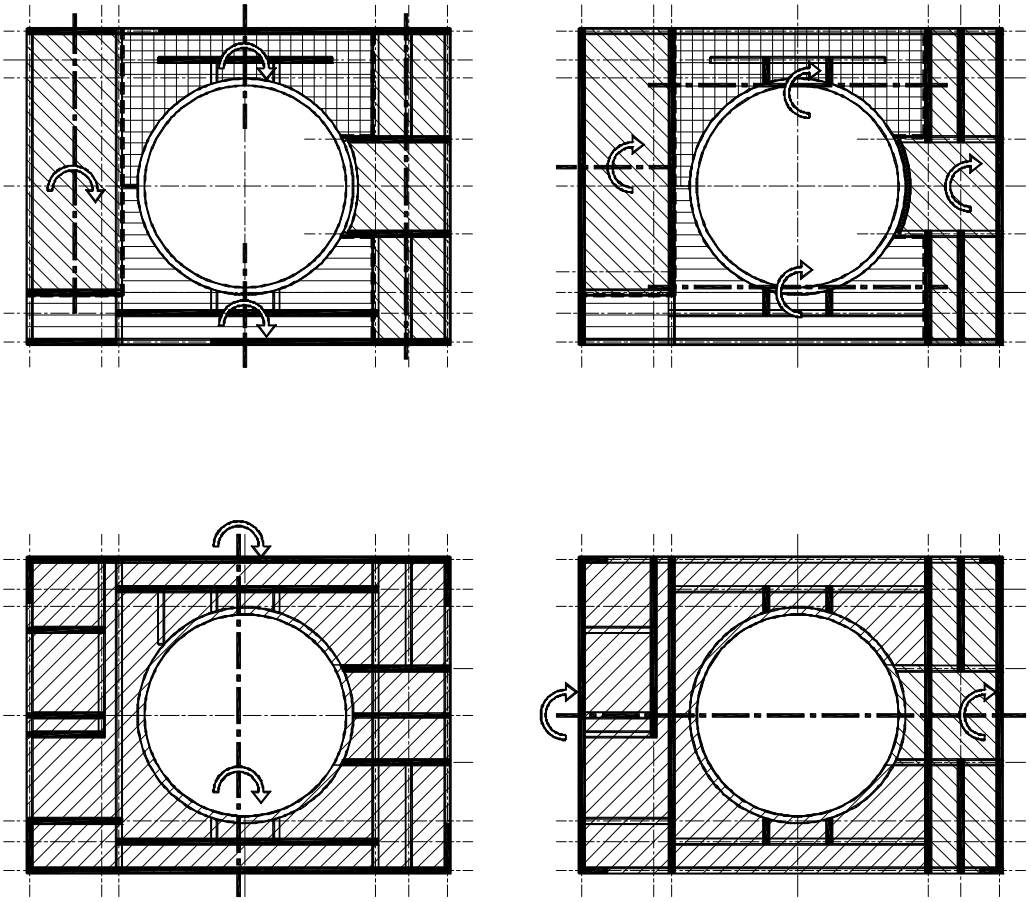

Figure 3.7.2-5 Method to Compute Weight and Inertia Moment of Lumped Masses

configuration (building)	section area	geometrical moment of inertia	axial area
(PCCV) 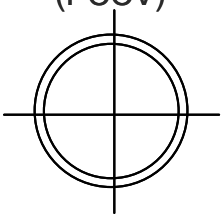	half of the total area	calculated from the total area	total area
(R/B) 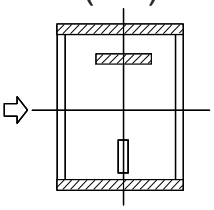	area of the shear walls effective to the seismic force (shown in the figure)	estimated for the shear walls effective to the seismic force (shown in the figure)	total axial area of the shear walls and columns effective to the seismic force

Figure 3.7.2-6 Method to Compute Section Area, Inertia Moment and Axial Area by Hand Calculations

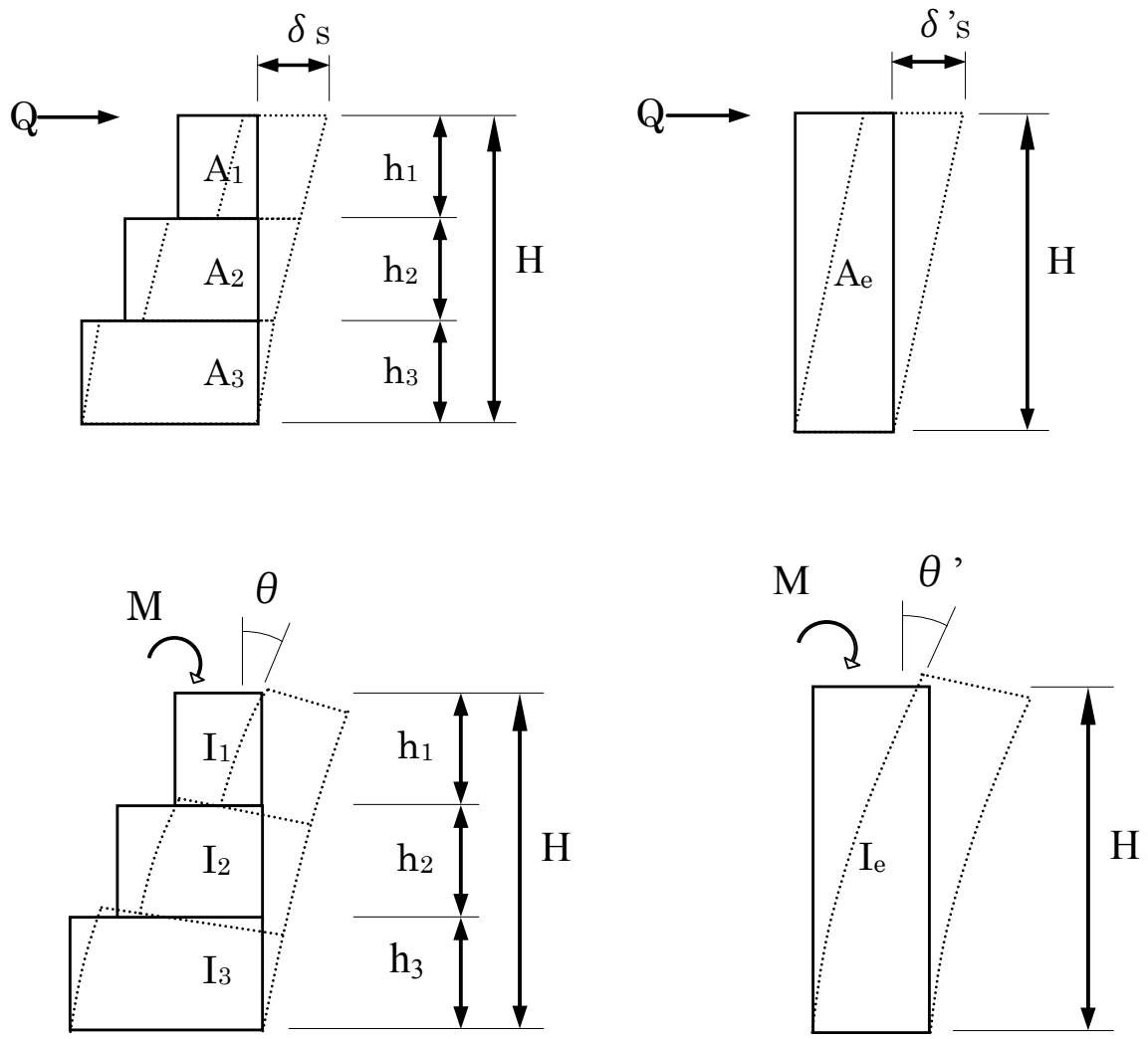

Figure 3.7.2-7 Method to Calculate Equivalent Shear Area

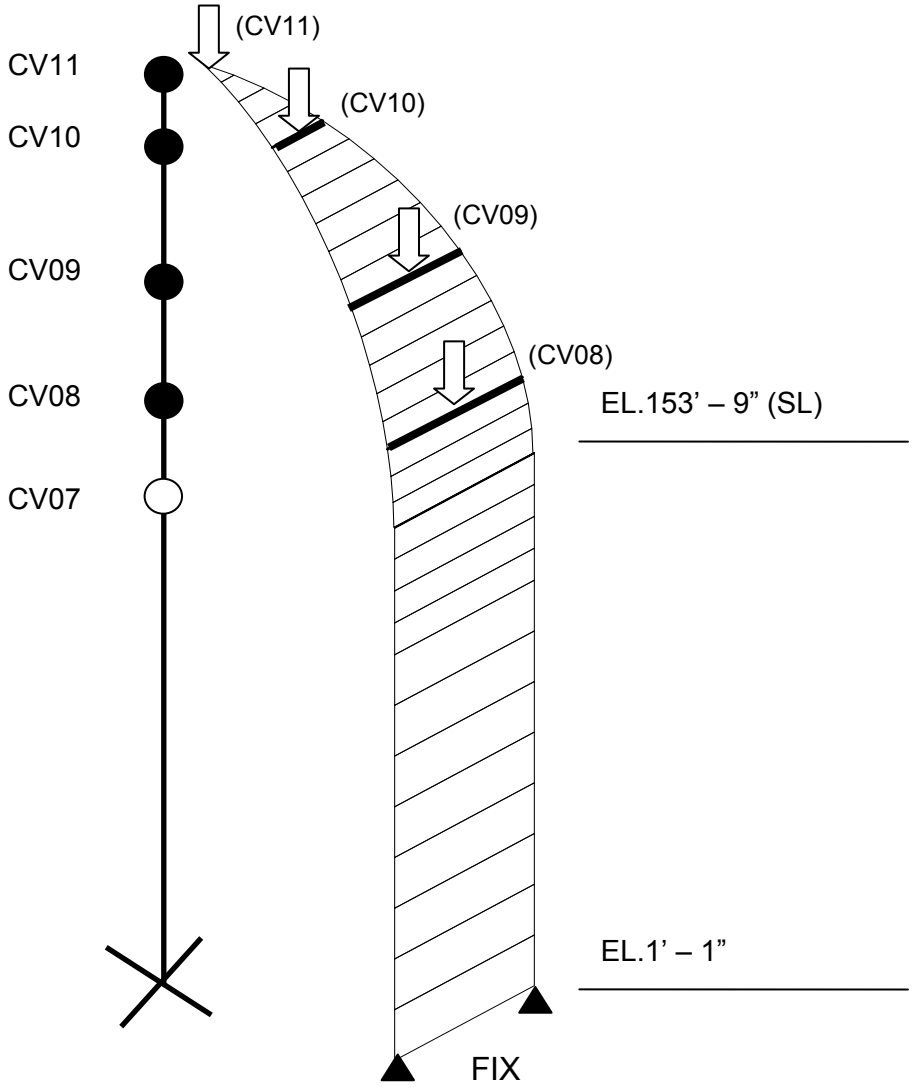

Figure 3.7.2-8 Method to Evaluate Vertical Stiffness of PCCV Dome

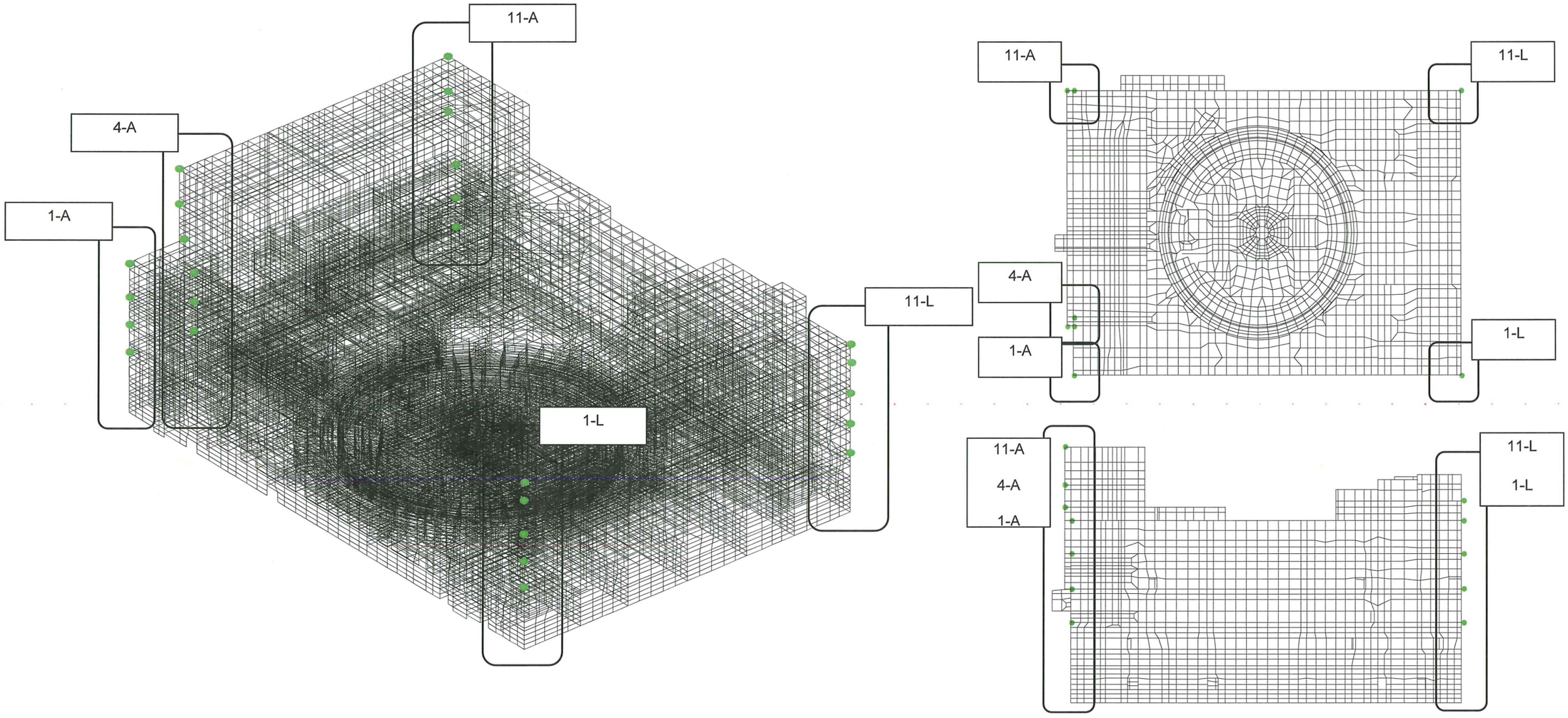

Figure 3.7.2-9 Fixed-Base FE Model of R/B

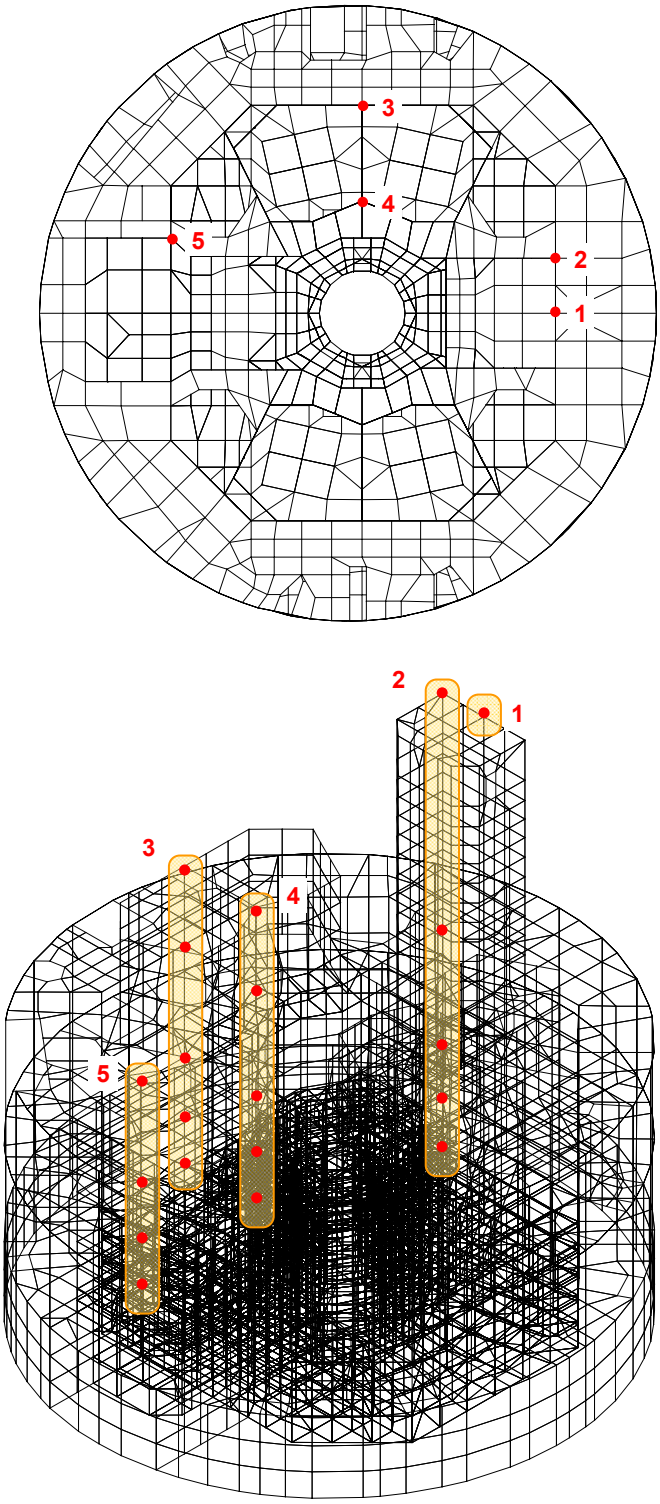

Figure 3.7.2-10 Fixed-Base FE Model of Containment Internal Structure

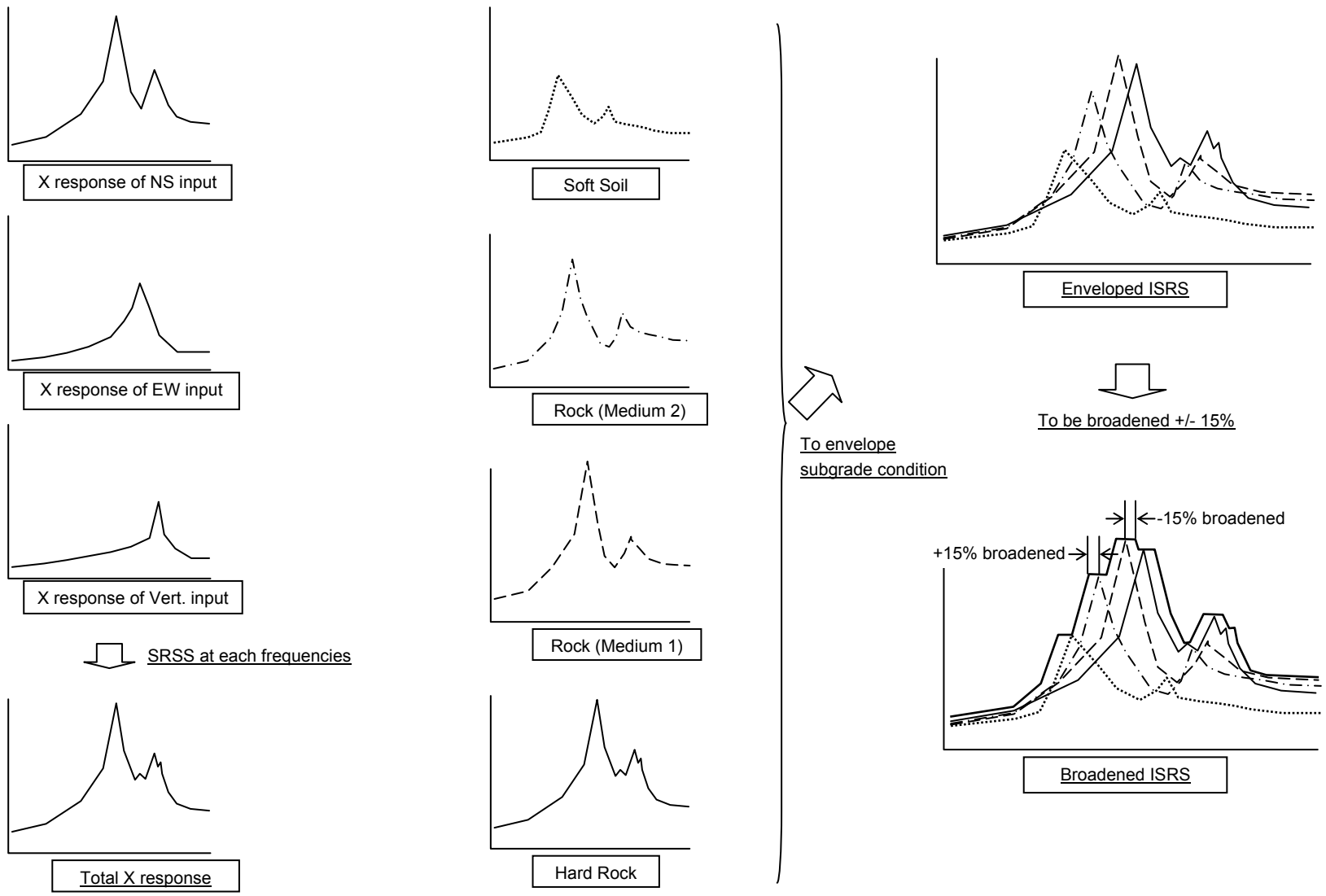

Figure 3.7.2-11 Development of Enveloped Design ISRS

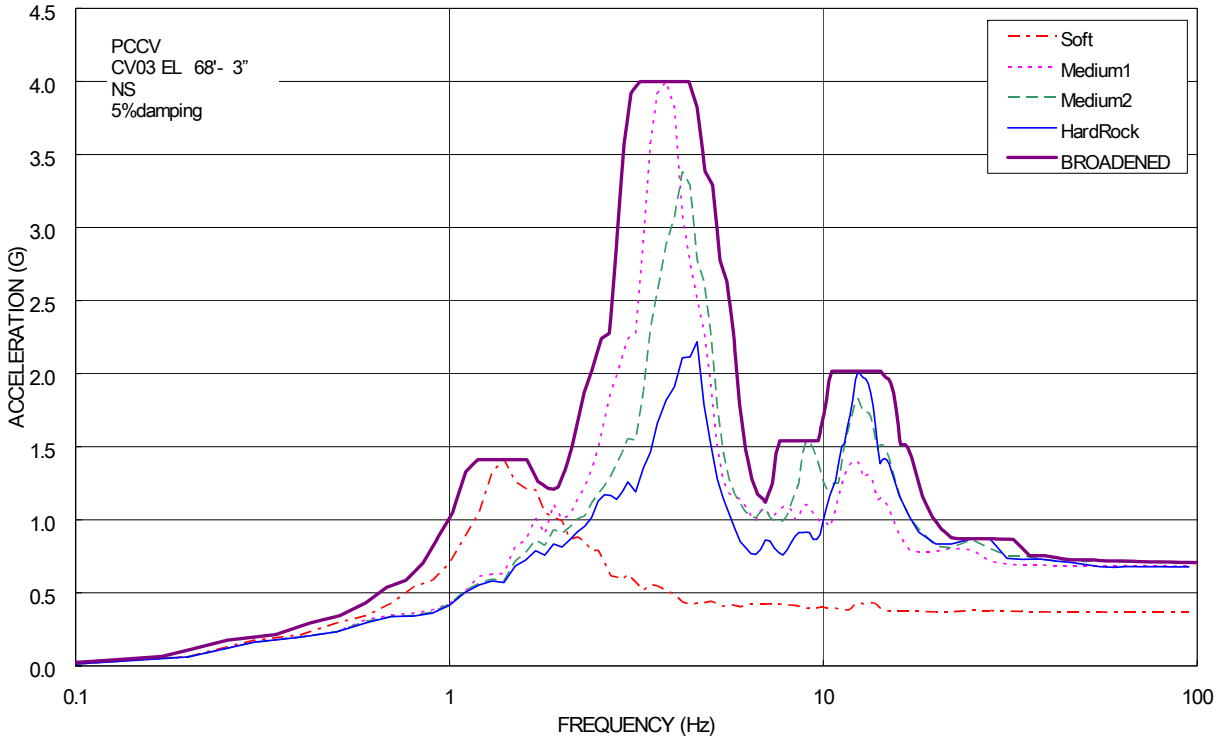

Figure 3.7.2-12 Example Design ISRS

3.8 Design of Category I Structures

3.8.1 Concrete Containment

3.8.1.1 Description of the Containment

3.8.1.1.1 General Arrangement

The general arrangement (GA) drawings in Chapter 1 show the overall layout of the US-APWR PCCV including the vessel general outline, floor plans, and elevations of the overall structure. The geometric shape of the PCCV is a vertically oriented cylinder topped by a hemispherical dome with no ring girder at the dome/cylinder interface. The GA drawings reflect major equipment locations, including the nuclear steam supply system, and overall contents such as the RWSP, reactor cavity, refueling cavity, refueling canal, operating deck, polar crane, and major piping, mechanical, and electrical penetrations. Locations of other features are also shown including the containment internal structure, buttresses, equipment hatch, personnel airlocks, basemat, and tendon gallery.

The PCCV is anchored to a foundation basemat, which is described in more detail in Subsection 3.8.5, that it shares with the R/B and the containment internal structure.

The PCCV has an inside diameter of 149 ft, 2 in. and an inside height of 226 ft, 5 in. The thickness is 4 ft, 4 in. for the cylinder and 3 ft, 8 in. for the dome. Areas around the large openings are thickened to provide additional strength and provide space for the prestressing tendons that are deflected around the openings. The materials used to construct the PCCV are discussed in Subsection 3.8.1.6.

The PCCV consists of a prestressed concrete shell containing unbonded tendons and reinforcement steel. Prestressing is obtained through post-tensioning – a method of prestressing in which tendons are tensioned after concrete has hardened. Reinforcing steel is provided overall in the cylinder and dome. Additional reinforcement is provided at discontinuities, such as the cylinder-basemat interface, around penetrations and openings, at buttresses, and at other areas.

The concrete shell inner surface is lined with a minimum 1/4-in. carbon steel plate that is anchored to the concrete shell and dome to provide the required pressure boundary leak tightness. Areas around penetrations, support brackets, inner walls, and heavy components bases have thickened steel liner plates. The other items integrally welded to the liner form part of the overall pressure boundary, including but not limited to, the equipment hatch at elevation 86 ft, 3 in. (with ground level elevation 2 ft, 8 in.), an airlock at elevation 28 ft, 10 in. and a personnel airlock at elevation 80 ft, 2 in., various piping and electrical penetrations, and miscellaneous supports that are embedded in the concrete shell such as the polar crane brackets. The liner plate system is not designed or considered as a structural member in providing for the overall PCCV load resistance. The liner plate system is attached to the PCCV shell with an anchorage system that is depicted on Figure 3.8.1-2. In the cylinder portion of the PCCV, the liner is anchored with WT5x11s running vertically at a pitch of 1.6° (approximately 25 in. spacing along the inside face of the PCCV shell), and stiffened with 1/2 in. by 6 in. rib plates running horizontally in the hoop direction. In the dome portion of the PCCV, the liner is anchored with 3/8 in. by 6 in. rib plates (spaced at approximately 32-1/4 in. maximum) which are

oriented in a radial pattern originating at the dome apex. The dome rib plates are stiffened with 5 in. by 3 in. by 1/4 in. angles running horizontally in the hoop direction, spaced approximately at 34 in. maximum. Where acceptable based on the results of the liner anchorage stress and strain design analyses (discussed in Subsection 3.8.1.4), the liner anchors are connected to the liner using discontinuous welds such as stitched fillet welds.

Figure 3.8.1-1 provides the overall dimensions of PCCV and Figure 3.8.1-5 provides GA of prestressing tendons and conventional reinforcement of the PCCV shell. Figure 3.8.1-3 and 4 also show the liner anchorage system arrangement.

3.8.1.1.2 Equipment Hatch

Figure 3.8.1-6 provides the equipment hatch general layout. The hatch is located at centerline elevation 86 ft, 3 in., azimuth 40 degrees, and is a 27 ft, 11 in. diameter spherical dish with a convex profile projecting into the PCCV volume. The containment internal pressure places the hatch head into compression against a double-sealed seat on the frame. The space between the two seals is capable of pressure testing for leakage across either seal.

A lifting rig with an electrically powered hoist is provided to disengage, transport, and store the hatch in a secure position next to the opening during outages. When required to seal the opening, the hatch is transported back by hoist, repositioned, refastened, and pressure tested for leaks.

3.8.1.1.3 Personnel Airlocks

Figure 3.8.1-7 provides the general layout for the two personnel airlocks. The lower airlock at centerline elevation 28 ft, 10 in. is located at azimuth 24 degrees, and upper airlock at centerline elevation 80 ft, 2 in. is located at azimuth 120 degrees. The airlock inside diameter is 8 ft, 6-3/8 in.

3.8.1.1.4 Mechanical Penetrations

Several typical PCCV penetrations are shown in Figure 3.8.1-8.

Figure 3.8.1-8, Sheet 12, shows typical details for the main steam penetrations. An anchor flange disc is embedded along the outer surface of the PCCV wall, with 12 triangular gussets at equal spacing connecting the flange disc and a 60 in. Outside Diameter (OD) cylindrical pipe sleeve, which is capped with a flexible boot outside the PCCV. A similar gusset configuration exists at the PCCV inner wall surface connecting the pipe sleeve to the thickened steel liner. The sleeve extends approximately 3 ft, 9-1/4 in. inside containment for Loops A and D, and 4 ft, 3-1/4 in. for Loops B and C as measured along the sleeve centerline, and is closed off by a thickened end cap with a concentric opening for the passage of the steam line. The 32 in. OD main steam pipe passes through the sleeve opening, and a thickened pipe wall is welded to the end cap, but allowed to expand outside the PCCV.

Figure 3.8.1-8, Sheet 13, shows typical details for the startup feedwater penetration. An anchor flange disc is embedded along the outer surface of the PCCV wall, with eight triangular gussets at equal spacing connecting the flange disc and 30 in. OD cylindrical

pipe sleeve which is capped with a flexible boot outside the PCCV. A similar gusset configuration exists at the PCCV inner surface connecting the pipe sleeve to the thickened steel liner. The sleeve extends approximately 3 ft, 7-1/4 in. inside containment for Loops A and D, and 3 ft, 9-1/4 in. for Loops B and C as measured along the sleeve centerline, and is closed off by a thickened end cap with a concentric opening for the passage of the steam line. The 16 in. OD feedwater supply pipe passes through the sleeve opening, and a thickened pipe wall is welded to the end cap, but allowed to expand outside the PCCV. The 4 in. SG blowdown pipe (Figure 3.8.1-8 Sheet 14) passes through a 14 in. OD pipe sleeve that is anchored in the PCCV wall with four rectangular gussets embedded approximately midway in the wall. The pipe sleeve extends approximately 1 ft, 10-5/8 in. into containment for all four loops, where the pipe and sleeve end cap are welded together. The SG blowdown pipe sleeve is capped with a flexible boot outside the PCCV.

The fuel transfer tube penetrates the PCCV wall near azimuth 0 degrees, connecting the fuel handling canal in the R/B with the refueling canal in the interior of the PCCV. The fuel transfer tube penetration is sealed with the PCCV wall similar to other mechanical penetrations. The containment boundary is a double-gasketed blind flange at the refueling canal end. The expansion bellows are independent of the containment boundary; however, they maintain water seals by accommodating differential movement of the structures.

In accordance with the Section C.IV.1 “Combined License Application Acceptance Review Checklist” of RG 1.206 (Reference 3.8-1), the US-APWR PCCV is also equipped with dedicated PCCV penetrations, equivalent in size to a single 3 ft diameter opening, in order not to preclude future installation of systems to prevent containment failure, such as a filtered vented containment system.

Figure 3.8.1-8, Sheets 1 through 10, and 15, show other typical mechanical penetration details. Figure 3.8.1-8, Sheet 16, provides the penetration detail of the refueling canal.

3.8.1.1.5 Electrical Penetrations

Figure 3.8.1-8, Sheet 11, shows a typical electrical penetration detail.

3.8.1.1.6 Prestressing Configuration

Horizontal hoop tendons are used in the cylinder and the lower part of the dome. The horizontal tendons wrap around the entire circumference, and are anchored at two vertical buttresses 180 degrees apart. The anchors for the horizontal tendons are staggered such that adjacent tendons are anchored on opposite buttresses. The horizontal tendons anchored at the two vertical buttresses are accessed for servicing through vertical chases provided in the R/B at each buttress.

The inverted U tendons run vertically up the cylinder, over the dome in a non-radial mesh pattern, and down to the tendon gallery on the opposite side. These inverted U tendons, approximately configured in the form of an inverted “U,” are anchored at each end in a tendon gallery. The circular tendon gallery allows for servicing and installation of the inverted U tendons and is located entirely within the reinforced concrete basemat foundation. The tendon gallery is accessed through a hallway, which passes horizontally through the basemat to the exterior plant yard.

Typical PCCV structural details are given in Figures 3.8.1-1 and 2. Design details include tendon and tendon anchorage, typical liner and liner anchorage, typical conventional reinforcing (non-prestressed) layouts, anchorage of the PCCV shell to the basemat, polar crane bracket, tendon buttress, structural reinforcing, and tendon spacing at openings. Table 3.8.1-1 presents basic design data for the PCCV that functions as the primary containment for the US-APWR.

3.8.1.2 Applicable Codes, Standards, and Specifications

The following industry codes, standards and specifications are applicable for the design, construction, materials, testing and inspections of the PCCV.

Rules for Construction of Nuclear Facility Components, Division 2, Concrete Containments, Section III, American Society of Mechanical Engineers, 2001 Edition through 2003 Addenda [hereafter referred to as ASME Code]. (Reference 3.8-2).

> Note: Articles CC-1000 through CC-6000 of Section III, Division 2 are acceptable for the scope, material, design, construction, examination, and testing of concrete containments of nuclear power plants subject to the regulatory positions provided by RG 1.136 (Reference 3.8-3).

Rules for Inservice Inspection of Nuclear Power Plant Components, Section XI, American Society of Mechanical Engineers, 2001 Edition through 2003 Addenda (Reference 3.8-4).

Design Limits, Loading Combinations, Materials, Construction, and Testing of Concrete Containments, RG 1.136, U.S. Nuclear Regulatory Commission, Washington, DC, Revision 3, March 2007 (Reference 3.8-3).

Inservice Inspection of Ungrouted Tendons in Prestressed Concrete Containments, RG 1.35, U.S. Nuclear Regulatory Commission, Washington, DC, Revision 3, July 1990 (Reference 3.8-5).

Determining Prestressing Forces for Inspection of Prestressed Concrete Containments, RG 1.35.1 U.S. Nuclear Regulatory Commission, Washington, DC, July 1990 (Reference 3.8-6).

Concrete Containment, NUREG-0800 SRP Section 3.8.1, U.S. Nuclear Regulatory Commission, Washington, DC, March, 2007 (Reference 3.8-7).

3.8.1.3 Loads and Load Combinations

The PCCV is designed for the loads and load combinations defined in the ASME Code, Section III (Reference 3.8-2), in Article CC-3200 “Load Criteria” and Table CC-3230-1 “Load Combinations and Load Factors,” except as noted in RG 1.136 (Reference 3.8-3) Regulatory Position 5:

- The post LOCA flooding combined with the OBE set at one-third or less of the plant SSE is eliminated, since the load combination is less severe than the post-LOCA flooding combined with a SSE.

- ASME Code, Section III, Subarticle CC-3720 is satisfied by addressing an accident that releases hydrogen generated from 100% fuel clad-coolant accompanied by hydrogen burning, including the effects of temperature and prestress. See Subsection 3.8.1.3 for further discussion of this design condition.

Load combinations and factors based on ASME Table CC-3230-1 are presented in Table 3.8.1-2. Load combinations involving wind and tornado have been determined to be less severe than other cases through comparison calculations to the design-basis earthquake loads and, therefore, load combinations involving wind and tornado are not used in the full detailed design analyses of the overall PCCV structure and its liner.

3.8.1.3.1 Loads

The following is a brief description of loads unique to the PCCV and liner used in Table 3.8.1-2 for design and analysis. Subsection 3.8.4.3 gives definitions and descriptions of other loads based on the ACI 349 (Reference 3.8-8) and AISC N690-1994, including Supplement 2 (Reference 3.8-9), definitions and descriptions, which are consistent with the ASME Code, Section III.

- **Prestress Load**

  For purposes of the US-APWR PCCV design, prestress is defined as the load on the PCCV dome and cylinder walls that, when applied by mechanical force from tendons after the concrete has hardened, results in the introduction of internal stresses to reduce potential tensile stresses in concrete resulting from other loads. The initial prestress governs the cylinder wall and dome thickness. It is not governed by radiation shielding.

- **Design-Basis Accident Pressure (P_a) and Test Pressure (P_t)**

  The DBA pressure is 68 psig. The DBA pressure is increased for structural design purposes using load factors as shown in ASME Code, Section III, Table CC-3230-1, depending on the particular load combination considered.

  The structural integrity test pressure P_t is 1.15 times the design pressure (P_t = 78.2 psig).

  External or internal events such as containment spray actuation may induce a negative pressure on the PCCV. See Chapter 6 for further discussion. Therefore, the PCCV is designed for a negative pressure of 3.9 psig as a separate event.

  With respect to accident pressure loads, 10 CFR 50.44 (Reference 3.8-10) requires that an analysis be performed that demonstrates that the containment structural integrity is maintained under loads resulting from combustible gases generated from metal-water reaction of the fuel cladding. In determining loads from combustible gases, the US-APWR design follows the guidance of RG 1.7 (Reference 3.8-11), in determining and analyzing the design accident pressure loads.

- **Thermal Loads (T_o) and Accident Thermal Loads (T_a)**

The normal operating environment inside and outside the PCCV is specified in Table 3.8.1-3 and Figures 3.8.1-9 through 3.8.1-13. Normal thermal loads for the exterior walls and roofs are addressed in the design of the PCCV. For the effects of transient loads such as T_a, the overall behavior of the PCCV is first determined. A portion of the PCCV shell can then be analyzed for local effects using the results obtained from the global analysis as boundary conditions, for example at penetrations and/or at its anchorages to the basemat.

During normal operation, a linear temperature gradient develops across the PCCV wall thickness. After a LOCA, however, the sudden increase in temperature in the liner and adjacent concrete produces a nonlinear transient temperature gradient. The temperature versus time is considered when combining with accident pressure in the specified load combinations, and worst case temperature gradients within the volume of the PCCV are used in the thermal analyses as discussed in Subsection 3.8.1.4. The calculated thermal gradients are developed in a manner consistent with the methodology of ACI-349 (Reference 3.8-8) Appendix B and its corresponding commentary.

- **Earthquake Loads (E_{ss})**

  For the PCCV, earthquake loads E_{ss} and the seismic analysis are discussed and summarized in Section 3.7. There are two horizontal and one vertical earthquake components that require combination as discussed in Subsection 3.7.2.6.

3.8.1.3.2 Other Loads

Loads other than those discussed in the previous subsection, such as crane or other attachment loads, hydrodynamic, pressures from soil, jet impingement or pipe impact loads cause of pipe break, and flooding have also been investigated in the overall design but also in particular for local effects. Construction loads on the liner are of particular concern and are included in the discussion in Subsection 3.8.1.3.

3.8.1.3.2.1 OBE-Induced Stress Cycles

As recommended in Section II.3.C of NUREG-0800, SRP 3.8.1 (Reference 3.8-7), the design for fatigue effects resulting from OBE-induced stress cycles is considered. This is particularly important for penetrations, areas of the liner adjacent to crane brackets, or other SSCs potentially subject to high numbers of repeated loads. In determining the number of earthquake cycles for use in fatigue calculations, the guidance of NRC Staff Requirements Memorandum SECY-93-087 (Reference 3.8-12) is used. The number of earthquake cycles used is two SSE events with 10 maximum stress cycles per event or equivalent.

3.8.1.3.2.2 Hydrogen Burn

Containment integrity is maintained by satisfying Subarticle CC-3720 of the ASME Code, Section III (Reference 3.8-2), which considers the pressure and dead load combination independently during an accident (exclusive of seismic or DBA) loadings that releases hydrogen generated from 100% metal-water reaction of the fuel cladding and accompanied by hydrogen burning. Under these conditions, the loadings do not produce

strains in the PCCV liner in excess of the limits established in Subarticle CC-3720 of the ASME Code, Section III (Reference 3.8-2).

For the factored load design associated with the prestressed concrete wall:

$$D + P_g1 + [P_g2 \text{ or } P_g3]$$

where

D	=	Dead load
P_g1	=	Pressure resulting from an accident that releases hydrogen generated from 100% fuel clad metal-water reaction
P_g2	=	Pressure resulting from uncontrolled hydrogen burning (if applicable)
P_g3	=	Pressure resulting from post-accident inerting assuming carbon dioxide is the inerting agent (Not applicable to US-APWR)

In accordance with RG 1.136 (Reference 3.8-3), a minimum design requirement is maintained by satisfying:

$$D + 45 \text{ psig}$$

For the US-APWR, based on a DBA pressure P_a of 68 psig and a corresponding design test pressure of 1.15 x P_a, the above minimum requirement of D + 45 psig is met by virtue of the design and does not require design evaluation.

3.8.1.3.3 Load Combinations

Load combinations and factors are presented in Table 3.8.1-2, which includes the worst case load combination of dead load, operating live load, and maximum load values of extreme environmental conditions.

3.8.1.3.4 Liner Plate Loads and Load Combinations

Liner plate strains are evaluated for the same loads and load combinations as those used to design the PCCV shell, which are presented in Table 3.8.1-2, except that all load factors for the liner plate are 1.0 in accordance with Subarticle CC-3720 of the ASME Code, Section III (Reference 3.8-2). In general, load cases that are shown to be less severe than other cases do not receive a full design analysis.

The liner plate stresses are evaluated for the construction load category only. During construction, the liner plate functions as the inner concrete form and as such it is subject to pressure from concrete placement as a primary load. This pressure can be treated as a hydraulic load with a maximum pressure determined as follows: the head height is the sum of the placement rate plus one foot for vibration plus one foot for miscellaneous factors. After the concrete sets, this load on the liner is no longer a real mechanical load; therefore, it is not combined with other primary loads.

A condition of the liner which is considered in the design occurs after the postulated DBA, when the pressure has decreased and the temperature is high in the liner, but has

not yet significantly increased in the concrete shell. This condition produces large loads in the liner due to the concrete anchorage restraining expansion of the liner steel.

Accident pressure has little effect on the liner plate since it is backed by the concrete shell which is constructed against it.

Other loads and effects for the liner, penetrations, brackets, and attachments are considered. Local thickening of the liner is provided as necessary at penetration assemblies. The liner analysis considers deviations in the liner geometry due to fabrication and erection tolerances, including secondary stresses caused by service and factored loads to the displaced shape of the liner caused during construction as discussed above. Stresses imposed by mechanical load of concrete are not included since those stresses do not pose real loads once the concrete has hardened.

The effects of anchors, embedments, or other attachment details not attached to the steel liner or a load carrying steel element that provide anchorage into the PCCV from the external surface, are considered for their effect on the PCCV. The liner is not considered as a structural member when determining overall PCCV integrity, however where necessary the liner may be considered to satisfy the requirement of 0.0020 times the gross cross-sectional area for reinforcement in each direction on the inside face of the PCCV to resist effects of shrinkage, temperature, and membrane tension.

3.8.1.4 Design and Analysis Procedures

Design and analysis procedures for structural portions of the PCCV, and specified allowable limits for stresses and strains as discussed in Subsection 3.8.1.5, are in accordance with Article CC-3000 of the ASME Code, Section III (Reference 3.8-2). The design and analysis procedures for the PCCV, including the steel liner, are according to those stipulated in Article CC-3300 of the ASME Code, Section III (Reference 3.8-2) and RG 1.136 (Reference 3.8-3). ASME Code, Section III, Article CC-3100 applies to the design of the “Concrete Containment” and the “Metallic Liner.” ASME Code, Section III (Reference 3.8-2), covers both the “Service Load Category” and the “Factored Load Category.” Loads are classified as “Primary” or “Secondary” in accordance with definitions provided by the ASME Code, Section III (Reference 3.8-2).

The PCCV analysis methods are summarized in Table 3.8.1-4. For the US-APWR, which is based on a soil-spring modeling approach to represent the subgrade supporting media on a generic basis, the PCCV seismic analysis includes its basemat as well as the R/B and containment internal structure. The basemat design is further described in Subsection 3.8.5, the R/B in Subsection 3.8.4, and the containment internal structure in Subsection 3.8.3. The SSI design and analysis approach is discussed further in Subsection 3.7.2.4.

The detailed PCCV analyses use general purpose global FE models. The global FE model addresses discontinuities and openings in the PCCV structure, such as the cylinder-basemat interface, cylinder-dome springline, buttress-wall interface, equipment hatch, and personnel airlock openings. Changes in material properties, changes in physical dimensions such as thicknesses, and changes in boundary or support conditions between elements are accounted for in the models. The FEs used have membrane, bending, and tangential and radial shear capability.

Computer code development, verification, validation, configuration control, and error reporting and resolution are in accordance with the Quality Assurance requirements of Chapter 17.

3.8.1.4.1 Analyses for Design Conditions

3.8.1.4.1.1 Analytical Methods

The PCCV structure is analyzed by the use of the linear elastic FE computer program NASTRAN (Reference 3.8-13). The PCCV is isolated from other structures for the analysis of shell and domes stresses, however, it is supported on and anchored to a common basemat with those structures. The PCCV structure is idealized for analysis and modeled with NASTRAN as a structure consisting of isoparametric membrane-bending plate elements, and final NASTRAN results are validated by comparison to the results of separate ANSYS analyses (Reference 3.8-14).

The three-dimensional global FE analysis model as represented in Figures 3.8.5-7, 3.8.5-8, and 3.8.5-9 includes the overall PCCV structure, as well as the R/B, the containment internal structure and the common basemat to which all these structures are supported. The FEs used for the PCCV analyses (Figure 3.7.2-1) have membrane, bending, tangential, and radial shear capability. The model accounts for effective prestress equivalent to the variation of tendon friction due to losses or changing geometry, for example the inverted U-shape tendons' transition from cylinder to dome. In developing the model, the mesh size is chosen to comply with the following basic considerations and empirical checks.

- When considering areas, such as the main steam penetration, concentrated load, or reaction areas, the critical location for shear is generally one-half the thickness away from the opening edge and, the element size should account for this fact.
- The mesh discretization is chosen to assure adequate representation of the controlling stresses for key elements of the design such as for the general shell, the basemat, the discontinuities at cylinder base and the intersection with the dome, the large openings, buttresses, high energy piping penetrations, and pipe whip restraint locations, where required.

The behavior of the PCCV model overall is typically axisymmetric, particularly under dead and pressure loads. The non-axisymmetric effects of such loads including but not limited to wind, tornadoes, earthquake, and pipe rupture are taken into account in the FE analysis as required by SRP 3.8.1, Section II.4.B (Reference 3.8-7).

In designing the PCCV superstructure, individual nodal spring stiffnesses are applied at the supporting FE model boundary (i.e, the basemat/soil interface) to represent the properties of elastic soil springs with tension capability because the SRSS method based on elastic analyses is used to evaluate the seismic load for the three components of the earthquake. The design forces due to the seismic load obtained by the SRSS method are beyond those obtained from inelastic analysis, at the PCCV shell/mat interface. The associated redistribution effects are found to be insignificant.

Stress analyses of the FE models are performed considering the following loads defined in accordance with ASME Code, Section III, Article CC-3000 (Reference 3.8-2):

- Dead load
- Live load (including polar crane loads as applicable)
- Prestressing load
- Internal pressure
- Seismic load
- Wind load
- Thermal load

With regard to thermal load, in order to consider thermal effects in the global FE model due to expansion of the liner, the liner plate loading is taken into account without explicitly modeling the stiffness of the liner.

Prestressing force is calculated considering the losses due to slip at anchorage, elastic shortening, creep of concrete, shrinkage of concrete, stress relaxation and tendon friction.

Large openings are modeled in the three-dimensional global FE analysis model described above. The design of the large openings for the one equipment hatch and the two personnel airlocks use the results of FE analyses using this global FE model. In accordance with ASME Code, Section III, Subarticle CC-3544 “Curved Tendons” and Subarticle CC-3340(a), the global model accounts for all forces imposed by tendons curved around the opening, such as effective prestress equivalent to the variation of prestress forces due to friction and other loses. The global FE model has membrane, bending and tangential, and peripheral and radial shear capability.

The PCCV buttresses are modeled in the three-dimensional global FE analysis model described above so that the discontinuity effects of the normal shell and the thickened buttress can be evaluated in the design. Local effects are also considered using the test results documented in Testing of Large Prestressing Tendon End Anchor Anchorage Regions, by T.E. Johnson (Reference 3.8-15).

3.8.1.4.1.2 Thermal Analyses

The PCCV atmosphere and open-air or indoor atmosphere are subject to a steady temperature condition during normal operation. The steady temperature conditions result in a linear temperature distribution within the PCCV shell. Temperatures within the concrete wall are calculated in a unidimensional heat flow analysis. The average and equivalent linear gradients considering thermal stress of the liner plate are applied to the FE model of the PCCV.

The PCCV is subject to a rapid temperature transient in the event of a LOCA. The temperature transients result in a nonlinear temperature distribution within the PCCV shell. Temperatures within the concrete wall are calculated in a unidimensional heat flow analysis and the average and equivalent linear gradients considering thermal stress of the liner plate, are applied to the FE model of the PCCV, as during normal operation.

3.8.1.4.1.3 Variation of Physical Material Properties

In the design analysis of the PCCV, the physical properties of materials are based on the values specified in applicable codes and standards. The design analysis takes into account the minimum/maximum values permitted by the codes and standards as appropriate to capture worst case analysis scenarios. It is the responsibility of the COL Applicant to perform reconciliation evaluations when the as-built properties become available.

3.8.1.4.2 Design Methods

The design of the PCCV structure is based on the membrane forces, shear forces and bending moments resulting from the loads and load combinations defined in Subsection 3.8.1.3. The membrane forces, shear forces and bending moments in selected sections are obtained from the linear analysis performed using the computer program NASTRAN. The global analysis considers the major structural configurations, including the PCCV, R/B, and containment internal structure on a common basemat, using solid element modeling and linear material assumptions.

3.8.1.4.2.1 Concrete Cracking Considerations

As discussed in SRP 3.8.1 (Reference 3.8-7) Section II.4.D, concrete cracking can affect the stiffness of the PCCV and cause shifting of the natural frequency, thereby affecting the response/loads used to design the PCCV. Accordingly, the analysis used to calculate the dynamic response of the PCCV resulting from dynamic loads such as earthquake and hydrodynamic loads considers the potential effects of concrete cracking where significant.

The concrete and reinforcement stresses are calculated considering the extent of concrete cracking at these sections. The following are assumptions for calculations:

- The concrete is isotropic and linear elastic but with zero tensile strength
- The thermal forces and moments are reduced according to the concrete cracking depth
- The redistribution of section forces and moments that occurs due to concrete cracking is taken into account

For thermal loads, the effects of concrete cracking are considered in developing the internal forces and moments in the section. For these loads, concrete cracking relieves the thermal stress, as well as redistributes the internal forces and moments on the sections from those obtained from a linear analysis. At the cylinder to basemat junction, cracking reduces the moments since they are created due to self constraint.

3.8.1.4.3 Ultimate Capacity of the PCCV

The US-APWR ultimate capacity analysis is based on hand computations using linear methods and comparison to previous test results as explained below. The analysis is considered to be a conservative approach because it does not take credit for redistribution of load or additional strain beyond the yield point of the materials. Although RG 1.136, Rev. 3, Page 10 recommends a non-linear FE analysis to determine the

ultimate capacity, the linear analysis approach is considered an acceptable alternative because of its inherent conservatism. SRP 3.8.1, Rev. 2, Page 16, makes a similar recommendation for non-linear FE analysis and suggests estimation of the capacity based on a maximum global hoop strain away from discontinuities of 0.8 %.

The configuration of the US-APWR PCCV is very similar to the 1/4-scale NUPEC/NRC PCCV Sandia National Laboratories (SNL) model, which was modeled after the latest design of PCCV used in Japan, on which ultimate capacity testing was performed at SNL in New Mexico and documented in Section 3.5 of Reference 3.8-16. That model exhibited functional failure (apparent liner tearing and subsequent leakage) approximately between 2.4 P_d and 2.5 P_d, and ultimate structural failure at approximately 3.6 P_d. Ultimate structural failure was due to membrane rupture of the shell at mid-height of the cylinder (tension hoop strain failure not adjacent to any penetration or discontinuity), with maximum hoop strain of 1.65% at time of ultimate rupture.

Based on the similarity of the US-APWR PCCV to that of the model tested at SNL, the ultimate structural capacity for the PCCV is estimated conservatively by hand calculations based on the cumulative yield strength of the steel reinforcement, tendons and liner plate acting in membrane hoop tension. The largest material strain capacity of the three materials (reinforcement, liner, and tendons) is that of the American Society of Testing and Materials (ASTM) A416 tendons, which have a defined yield strain of 1%. The resulting estimated ultimate pressure capacity of PCCV based on these hand calculations is 201 psig (approximately 3.0 P_d), and is bounded by the SNL model pressure and yield strain test results.

3.8.1.4.4 Liner System Design and Analysis Procedures

The design and analysis procedures for the liner as well as its liner anchors and all penetration assemblies, brackets, and attachments that could affect leak-tightness, are in accordance with the ASME Code, Section III requirements given in Article CC-3600 (Reference 3.8-2).

The liner design and analysis procedure do not take credit for the liner as contributing to the strength of the PCCV shell. Instead, the liner design and analysis procedures assure that the liner is designed to loads and load combinations (discussed in Subsection 3.8.1.3) in order to accommodate the strain and deformation of the PCCV shell to which it is anchored without a loss of the liner leak-tightness. This is in accordance with ASME Code, Section III (Reference 3.8-2), Subarticles CC-3121 and CC-3122. The liner is also designed and analyzed for the loads imposed during construction, such as concrete placement from pressure defined in Subsection 3.8.1.3. In particular, local and overall dome stability for concrete placement is verified.

The liner plate analysis also considers potential deviations in geometry due to fabrication and erection tolerances. The design strains, stresses, and forces in the liner and its anchors are within allowable limits defined by the ASME Code, Section III, Article CC-3700 (Reference 3.8-2) and discussed further in Subsection 3.8.1.5.

The stiffness of the liner plate is not included in the FE model. For evaluation of the PCCV concrete and reinforcement, no credit is taken for strength contribution of the liner to the PCCV shell. The results of the analyses are evaluated utilizing a post-processor that considers concrete cracking and strain compatibility among concrete, liner, tendons,

and reinforcement on the section subject to primary and secondary loads. To evaluate the liner strains for secondary loads such as thermal, the post-processor evaluation considers strain compatibility among the concrete, tendons, reinforcement, and liner plate, including liner expansion effects (due to temperature) to the liner buckling limits for strain determination. When considering thermal gradients from accident conditions on the liner, reduction in thermal moments due to concrete cracking is considered.

The liner anchorage system is designed so that its mechanical behavior is reasonably predictable for all design-basis loadings. The design and analysis procedures for the liner anchorage system conform to the ASME Code, Section III requirements given in Article CC-3630, and are similar to the anchorage system analysis approaches illustrated in BC-TOP-1 (Reference 3.8-17). The basic analysis is to illustrate that there is enough capacity in the system to accommodate the required design conditions which are usually dominated by accident thermal effects. Liner anchors are analyzed using beam or plate theory assuming that the liner remains elastic under all conditions. For example, in the cylinder, the liner is treated as a one-way strip (analyzed uniaxially) with multiple continuous spans across liner anchors. Liner anchor spring constants for the analysis of the elastic behavior are based on test results obtained from liner anchorage shear and pullout capacity tests. This is a conservative approach for determining forces on the liner anchors, because the benefits of biaxial stiffening of the liner plate are neglected. Biaxial stiffening would tend to reduce plate strains and therefore reduce the calculated loads on the anchorage. If liner stress and resulting membrane forces are substantially higher than the uniaxial yield strength as determined by design analysis, in accordance with ASME Code, Section III (Reference 3.8-2), Subarticles CC-3630 and CC-3810(c)(2), reductions in anchor loads caused by plastic behavior of the liner are used where appropriate, when substantiated by biaxial yield tests of the liner plate material.

For the penetration assemblies and openings, the US-APWR follows the ASME Code, Section III (Reference 3.8-2), requirements given in Subarticles CC-3640 and CC-3740. Penetration assemblies and openings, such as personnel airlocks, equipment hatch, and the fuel transfer tube assembly are analyzed using the same techniques and procedures as defined in Division 1 of ASME Code, Section III, where these components are not backed by concrete. The analysis considers the concrete confinement for the embedded portions of penetration sleeves as required by ASME Code, Section III.

For brackets and attachments that form part of the liner system, the design and analysis procedures conform to the ASME Code, Section III requirements given in Subarticle CC-3650 (Reference 3.8-2). Portions of the detailed design of the crane brackets are performed as hand calculations using classical analysis methodologies typically used for structural steel design.

3.8.1.4.5 Design and Analysis Procedures for Impactive and Impulsive Loading

The methods of analysis for impactive and impulsive loading used on the PCCV and its liner are either an energy balance technique or a non-linear dynamic analysis with a forcing function that represents the impulsive and/or impactive loading condition. The empirical missile penetration formulas used are described in Section 3.5. For the PCCV and its liner, missile penetration is limited to well below 75% of the total section thickness while at the same time ensuring that the overall structural integrity of the section is not compromised. The PCCV nominal thickness dimensions of 4 ft, 4 in. for

the cylinder and 3 ft, 8 in. minimum for the dome exceeds the required 16 in. thickness for Region 1 tornado missiles with minimum concrete strength of 7,000 psi. Based on the robust nature of the PCCV, externally generated design-basis missiles including tornado missiles, as discussed in Section 3.5, do not challenge the PCCV cylinder or dome. The SG and pressurizer compartments protect the liner from direct missile impact. In other areas of the PCCV where a high-energy piping missile potential is not discounted due to the LBB analysis discussed in Subsection 3.6.3, missile shielding in accordance with Section 3.5 is utilized inside the PCCV to prevent missile impact on the liner.

3.8.1.4.6 Design Report

A Design Report of the PCCV is provided separately from the DCD. In accordance with ASME Code, Section III (Reference 3.8-2), Subarticle NCA-3350, the Design Report has sufficient detail to show that the applicable stress limitations are satisfied when components are subjected to the design loading conditions.

3.8.1.5 Structural Acceptance Criteria

The PCCV, including its liner, is designed considering the loads and load combinations discussed in Subsection 3.8.1.3, and meets the structural acceptance criteria discussed in this subsection. The US-APWR PCCV structural acceptance criteria are based on the allowable stress and strain requirements given in Article CC-3400 of the ASME Code, Section III (Reference 3.8-2), and Article CC-3700 for the liner. In accordance with those requirements, the PCCV structure is designed to remain elastic under service load conditions and below the range of general yield under load conditions involving factored primary loads. In limited instances when load conditions involve primary plus secondary factored loads, a general yield state may occur only for some secondary components as permitted by Subarticle CC-3110, and not with respect to radial shear stress; however, reinforcement and concrete strains are maintained within allowable limits given in Subarticle CC-3420. The allowable stresses and strains are summarized in the following paragraphs where the major components of the PCCV and its liner are discussed with respect to factored loads and then service loads.

3.8.1.5.1 Acceptance Criteria for Factored Load Conditions

Factored loads include loads encountered infrequently, such as severe environmental, extreme environmental, and abnormal loads.

3.8.1.5.1.1 Concrete

The US-APWR design follows the requirements of ASME Code, Section III (Reference 3.8-2), Subarticle CC-3421.1, and Table CC-3421-1 of the ASME Code, Section III, which define the allowable concrete stresses for membrane and membrane plus bending. The allowable stresses therein are defined for both primary and primary-plus-secondary factored loads. Primary and secondary forces are defined in Subarticle CC-3136 of the ASME Code, Section III (Reference 3.8-2). Primary forces are the result of items such as actual loads, whereas secondary forces result from conditions caused by internal self-constraint and are self-limiting. The forces which result from thermal strain of the concrete wall are an example of secondary forces.

As stated in Subarticle CC-3421.2 of ASME Code, Section III (Reference 3.8-2), concrete tensile strength is not relied upon to resist membrane and flexural tension forces.

Concrete in General Shear

The US-APWR complies with ASME Code, Section III (Reference 3.8-2) requirements for qualification of concrete shear. Shear capacity is defined using two components. One component is that carried by the concrete defined as V_c, and the other, if required, is that carried by the reinforcing steel V_s. The total shear capacity of the concrete, provided by the sum of the two, is greater than the applied shear load. In the ASME Code, Section III (Reference 3.8-2), the concrete capacities are defined in Subarticle CC-3420 "Allowable Stress for Factored Loads." The steel reinforcement capacities for factored load design are defined in Subarticle CC-3521 "Design of Shear Reinforcement."

Radial Shear

The radial shear provisions for the US-APWR are in accordance with the ASME Code, Section III (Reference 3.8-2), as stated in Subarticles CC-3421.4.2 "Prestressed Concrete" and CC-3521.2 "Radial Shear."

Tangential Shear

The allowable tangential shear stress in concrete is defined in Subarticle CC-3421.5.2, which defines concrete tangential shear strength based on providing a minimum amount of prestress as described in Subarticle CC-3521.1.2. ASME Code, Section III (Reference 3.8-2), Subarticle CC-3521.1.2 requires that: "(a) A sufficient amount of prestress shall be provided so that N_h and N_m are negative (compression) or zero. Thermal membrane forces shall be included in N_h and N_m for the calculation of effective prestress" and "(b) No additional reinforcement is required for tangential shear forces if $V_u \leq 0.85\ V_c$ where V_c is calculated according to Subarticle CC-3421.5.2." Item (c) of Subarticle CC-3521.1.2 further states "When the section under consideration does not meet the requirements of either Subarticle CC-3521.1.2 (a) or (b), additional reinforcement shall be provided according to requirements of Subarticle CC-3521.1.1." The requirements of Subarticle CC-3521.1.1 include provisions for inclined reinforcement. Because it is highly undesirable from a construction standpoint to provide inclined shear reinforcing, the PCCV shell is designed such that any tangential shear reinforcement provided is orthogonal only (hoop/meridional), and the amount of prestress used in the design is increased as necessary to preclude the use of inclined shear reinforcement.

Note: For purposes of tangential shear reinforcement design per Subarticle CC-3521, the membrane forces N_h and N_m include thermal, pressure, prestress and dead loads but do not include earthquake, wind, or tornado loads. The lateral membrane loads from earthquake or wind are defined in N_{hl} and N_{ml} and the lateral tangential shear force is defined in V_u.

For the structural portions of the PCCV, the specified allowable limits for stresses and strains are in accordance with Article CC-3400 of the ASME Code, Section III (Reference 3.8-2), with the following additional limits provided by RG 1.136 Regulatory Position 5.C. (Reference 3.8-3):

- For the PCCV, the computed principal tensile stress is not to exceed the following value:

  $4\sqrt{f_c}$ (psi)

Peripheral Shear

This type of shear loading (also known as punching shear) is applicable to penetration areas and items such as the crane brackets. The PCCV complies with shear allowable relative to the concrete shear capacity as given in Subarticle CC-3421.6, and Subarticle CC-3521.3 for reinforcement shear capacity (Reference 3.8-2).

Torsional Shear

This type of loading can occur at piping penetrations due to applied piping loads. The torsional shear allowable relative to concrete is given in Subarticle CC-3421.7 (Reference 3.8-2). At penetrations and similar situations, when the applied shear exceeds that determined in Subarticle CC-3421.7, shear reinforcement is provided in accordance with Subarticle CC-3521.4 (Reference 3.8-2).

3.8.1.5.1.2 Prestressing System

Tendons

The allowable for factored loads is 90% of yield as stated in Subarticle CC-3423 (Reference 3.8-2).

End Anchor

The US-APWR is in accordance with ASME Code, Section III, Subarticle CC-3431.1 for concrete compression allowable under the tendon bearing plates. The anchorage components meet the requirements Subarticles CC-2430, CC-2450 and CC-2460 (Reference 3.8-2).

Prestressing Losses

The losses considered in the tendons are based on the items defined in ASME Code, Section III, Subarticle CC-3542 (Reference 3.8-2) including:

(1) Slip at anchorage

(2) Elastic shortening of concrete

(3) Creep of concrete

(4) Shrinkage of concrete

(5) Stress relaxation

(6) Friction loss due to intended or unintended curvature in the tendons

In addition, "Determining Prestressing Forces for Inspection of Prestressed Concrete Containments", RG 1.35.1 (Reference 3.8-6) is used as guidance for determination of prestressing losses. Prestressing losses are computed on the basis of the US-APWR, 60 year design life. It is the responsibility of the COL Applicant to assure that wobble and curvature coefficients used in computing prestressing losses due to friction are consistent with the tendon system corrosion protection coatings present at the time of prestressing.

3.8.1.5.1.3 Reinforcement Steel

Tension

In accordance with ASME Code, Section III, Subarticle CC-3422.1 (Reference 3.8-2), the yield strength is limited to 60,000 psi and the allowable stress for load resisting purposes does not exceed 0.9 f_y. Under combined primary and secondary forces, the tensile strain in reinforcement may exceed 0.9 ϵ_y.

In limited cases such as at the edge of large openings, a limited amount of yielding is permitted in accordance with the provisions in Subarticle CC-3422.1.

Compression

In accordance with ASME Code, Section III, Subarticle CC-3422.2 (Reference 3.8-2), the allowable stress does not exceed $0.9f_y$. In limited situations where the concrete is required to strain during development of design concrete capacity, the reinforcement is allowed to strain beyond the point of yield.

General Shear

See discussion above for qualification of general shear capacity with factored loads.

Radial Shear

The radial shear provisions are in accordance with the ASME Code, Section III as stated in Subarticles CC-3421.4.2 "Prestressed Concrete" and CC-3521.2 "Radial Shear" (Reference 3.8-2).

Tangential Shear

Orthogonal tangential shear reinforcement is provided in accordance with the allowable stresses and the formulas in Subarticle CC-3521.1.1 (Reference 3.8-2).

Peripheral Shear

This type of shear loading is applicable to penetration areas and items such as the crane brackets. The allowable stresses used in the US-APWR design relative to the concrete shear capacity are as per ASME Code, Section III, Subarticle CC-3421.6 (Reference 3.8-2). Shear reinforcement is provided in accordance with Subarticle CC-3521.3, when applied shear exceeds that determined in Subarticle CC-3421.6.

Torsional Shear

Torsional shear reinforcement is provided in accordance with Subarticle CC-3521.4, when nominal torsional shear stresses exceed the allowable concrete torsional shear stresses determined in accordance with Subarticle CC-3421.7.

Radial Tension

Radial tension, as addressed in Subarticle CC-3545, exists in the through thickness direction in the outer portion of the cylinder wall and dome. Radial reinforcement is provided to resist the loads from this effect assuming no concrete tensile capability, even though this is not a Code requirement. Provision of this reinforcement also allows for an increase in compression stress allowable as stated in Note (2) in ASME Code, Section III, Table CC-3431-1 (Reference 3.8-2).

End Anchor Region

End anchor region requirements are stated in ASME Code, Section III, Subarticle CC-3543 (Reference 3.8-2). This section allows either calculations or testing for the determination of the required reinforcement.

3.8.1.5.2 Acceptance Criteria for Service Load Conditions

Service loads are any loads encountered during construction and in the normal operation of a nuclear power plant. Included in such loads are any anticipated transient or test loads during normal and emergency startup and shutdown of the nuclear steam supply, safety, and auxiliary systems. Also included in this category are those severe environmental loads which may be anticipated during the life of the facility.

The straight line theory of stress and strain is used based on assumptions specified in ASME Code, Section III, Subarticle CC-3511.2 (Reference 3.8-2).

3.8.1.5.2.1 Concrete

Membrane Compression, Tension and Bending

Subarticle CC-3431.1 and Table CC-3431-1 of the ASME Code, Section III (Reference 3.8-2) define the allowable concrete stresses for both membrane and membrane plus bending. The allowable stresses are defined for both primary and primary-plus-secondary service loads. Primary and secondary forces are defined in Subarticle CC-3136 of the ASME Code, Section III (Reference 3.8-2).

Table CC-3431-1 notes (2) and (3) state that if radial tension reinforcement is used in the cylinder wall and/or dome, the compression stress under initial prestress condition may be increased to $0.40f'_c$ and the normal allowable increased to $0.35f'_c$. For the PCCV, radial tension reinforcing is provided.

Concrete tensile strength is not relied upon to resist membrane and flexural tension forces in compliance with Subarticle CC-3431.2 of the ASME Code, Section III (Reference 3.8-2).

General Shear Capacity

The US-APWR complies with the ASME Code, Section III (Reference 3.8-2) requirement for qualification of concrete shear. Shear capacity is usually defined using two components. One component is that carried by the concrete defined as V_c, and the other, if required, is that carried by the reinforcing steel V_s. The total shear capacity being the sum of the two must be greater than the applied shear load. Concrete capacities are defined in Subarticle CC-3431.3, and steel reinforcement capacities are defined in Subarticle CC-3522 of the ASME Code, Section III (Reference 3.8-2).

Radial Shear

The radial shear provisions in the ASME Code, Section III are stated in Subarticle CC-3431.3 "Shear, Torsion, and Bearing" and Subarticle CC-3522 "Service Load Design" (Reference 3.8-2).

Tangential Shear

The US-APWR design is in accordance with ASME Code, Section III, Subarticle CC-3431.3 (Reference 3.8-2). Since only wind load generates tangential shear in the service load category, it should have no impact on the design.

Peripheral Shear

The US-APWR design complies with allowable stresses as identified in ASME Code, Section III, Subarticle CC-3431.3 (Reference 3.8-2).

Torsional Shear

The US-APWR design complies with allowable stresses as identified in ASME Code, Section III, Subarticle CC-3431.3 (Reference 3.8-2).

Radial Tension

Radial reinforcement is provided to resist the loads from this effect assuming no concrete tensile capability, even though this is not a Code requirement.

3.8.1.5.2.2 Prestressing System

Tendon

The allowable tendon stresses are defined in the ASME Code, Section III, Subarticle CC-3433. The tendons are allowed to be temporarily tensioned up to $0.80f_{pu}$ or $0.94f_{py}$, whichever is less. The tension stress at the anchor point after seating is then allowed to be $0.73f_{pu}$. The calculated average tension stress over the length of tendon (effective prestress after anchoring) is not to exceed 0.70 f_{pu}.

End Anchor

ASME Code, Section III, Subarticle CC-3431.1 specifies concrete compression allowable under the tendon bearing plates. The anchorage components of the US-

APWR meet the requirements of Subarticles CC-2430, CC-2450 and CC-2460 (Reference 3.8-2).

Losses

The losses considered in the tendons are based on the items defined in ASME Code, Section III (Reference 3.8-2), Subarticle CC-3542. In addition, RG 1.35.1 (Reference 3.8-6) is used as guidance in the determination of prestressing losses. Prestressing losses are computed on the basis of the US-APWR 60 year design life. It is the responsibility of the COL Applicant to assure that wobble and curvature coefficients used in computing prestressing losses due to friction are consistent with the tendon system corrosion protection coatings present at the time of prestressing.

3.8.1.5.2.3 Reinforcing Steel Systems

Tension

In accordance with ASME Code, Section III, Subarticle CC-3432.1 (Reference 3.8-2), the average tensile stress is limited to $0.5f_y$; however, provisions are included for increases under certain conditions.

Compression

In accordance with ASME Code, Section III, Subarticle CC-3432.2 (Reference 3.8-2), the compressive stress is limited to $0.5f_y$; however, provisions are included for increases under certain conditions.

General Shear

See discussion above for qualification of general shear capacity with service loads.

Radial Shear

The radial shear provisions for the US-APWR are in accordance with the ASME Code, Section III, Subarticle CC-3431.3 “Shear, Torsion, and Bearing” and Subarticle CC-3522 “Service Load Design” (Reference 3.8-2).

Tangential Shear

The US-APWR design is in accordance with ASME Code, Section III, Subarticle CC-3522 (Reference 3.8-2). Since only wind generates tangential shear in the service load category, wind does not govern the design.

Peripheral Shear

The US-APWR design complies with allowable stresses as identified in ASME Code, Section III, Subarticle CC-3522 (Reference 3.8-2).

Torsional Shear

The US-APWR design complies with allowable stresses as identified in ASME Code, Section III, Subarticle CC-3522 (Reference 3.8-2).

Radial Tension

Radial tension, as addressed in ASME Code, Section III, Subarticle CC-3545 (Reference 3.8-2), exists in the through thickness direction in the outer portion of the cylinder wall and dome. Radial reinforcing is provided to resist the loads from this effect assuming no concrete tensile capability. Provision of this reinforcement also allows for an increase in compression stress allowable as stated in Note (2) in ASME Code, Section III, Table CC-3431-1 (Reference 3.8-2).

End Anchor

End anchor region requirements are stated in ASME Code, Section III, Subarticle CC-3543 (Reference 3.8-2). This section allows either calculations or testing for the determination of the required reinforcement.

3.8.1.5.3 Acceptance Criteria with respect to Concrete Temperatures

The US-APWR complies with ASME Code, Section III, Subarticle CC-3440 (Reference 3.8-2), which states temperature limits for the concrete temperature for normal and accident conditions, as follows.

a. For normal operation or any other long-term period, the temperatures are not to exceed 150° F except for local areas, such as around a penetration, which are allowed to have increased temperatures not to exceed 200°F.
b. For accident or any other short-term period, the temperatures are not to exceed 350°F for the interior surface. However, local areas are allowed to reach 650°F from steam or water jets in the event of a pipe rupture.
c. There are provisions to exceed these limits provided the design accounts for reduction in concrete strength and it can be proven there will not be concrete deterioration.

3.8.1.5.4 Acceptance Criteria for Impactive and Impulsive Loading

Yield strain and displacement values are permitted to exceed general stress and strain limits due to impactive and impulsive loading. In the case of impulse loads the usable ductility is 33% of the failure value and for impact effects the usable ductility is 67% of the failure value in accordance with ASME Code, Section III, Subarticle CC-3920 (Reference 3.8-2) for the design of the PCCV. Examples of impactive and impulsive loading include loading due to high-energy piping line breaks, localized yielding due to jet impingement and whip restraint loads, and external and internal missile loading. The design of containment internal structure is addressed in Subsection 3.8.3. General design for missiles is addressed in Section 3.5. A detailed discussion of those piping systems that exhibit LBB performance is given in Section 3.6.

3.8.1.5.5 Acceptance Criteria for Liner System

Liner Plate

The acceptance criteria for the PCCV liner plate are the stress and strain limits specified in the ASME Code, Section III (Reference 3.8-2), Table CC-3720-1, when considering the load combinations stated in Table CC-3230-1 with load factors of 1.0.

Liner Anchors

The acceptance criteria for the liner anchors are the force and displacement allowable values given in ASME Code, Section III (Reference 3.8-2), Table CC-3730-1. The allowable displacements used are based on percentages of ultimate break displacement values obtained from shear load and pull-out testing of the liner anchorage system.

Penetration Assemblies

The acceptance criteria are the design allowables given in ASME Code, Section III (Reference 3.8-2), Subarticles CC-3740 and CC-3820.

In accordance with Subarticle CC-3740(b), the design allowables for penetration nozzles are the same as used for ASME Code, Section III, Division 1, where a nozzle is defined as that part of the penetration assembly not backed by concrete.

In accordance with Subarticle CC-3740(c), the design allowables for the liner in the vicinity of the penetration are the same as those given in the AISC Code for resisting mechanical loads in the service load category. For factored load categories, the allowables are increased by a factor of 1.5, except for impulse loads and impact effects.

In accordance with Subarticle CC-3740(d), the portion of the penetration sleeves backed by concrete is designed to meet the acceptance criteria described above for the liner plate and anchors. Additionally, consistent with requirements in Subarticle CC-3820, to verify acceptability, the structural capacities of penetration assemblies that are designed for pipe loads are compared against either (a) the ultimate moment, axial, torque, and shear loadings that the piping is capable of producing, or (b) penetration loads based on a dynamic analysis considering pipe rupture thrust as a function of time. In the case of (b), penetration designs are later verified using results of piping analysis to assure the load used in the design is not exceeded.

Typically for the US-APWR, in order to preclude pipe rupture effects, flued heads are used for high-energy piping if large applied pipe rupture design loads are anticipated. Detailed discussion on this topic is provided in Section 3.6.

Brackets and Attachments

The allowables given in the ASME Code, Section III (Reference 3.8-2), Subarticles CC-3650 and CC-3750 are used as the acceptance criteria for brackets and attachments to the liner.

The US-APWR design avoids the use of brackets and similar items that transmit loads to the liner in the through-thickness direction. As much as practical in the design of

attachments which transmit major loads, for example crane brackets, the attachment is made continuous through the liner. When through-thickness liner loads cannot be avoided and the liner is 1 in. or more in thickness, then the special welding and material requirements of Subarticle CC-4543.6 are applied. In addition to the requirements given in Subarticle CC-4543.6 (a) through (d), ultrasonic examinations are required prior to fabrication to preclude the existence of laminations in the installed material.

3.8.1.6 Material, Quality Control, and Special Construction Techniques

The major materials that are used for the design of the PCCV are defined herein. It is the responsibility of the COL Applicant to assure that any material changes based on site-specific material selection for construction of the PCCV meet the requirements specified in ASME Code, Section III (Reference 3.8-2), Article CC-2000, and supplementary requirements of RG 1.136 (Reference 3.8-3) as well as SRP 3.8.1 (Reference 3.8-7).

Quality control programs are in accordance with applicable portions of Articles CC-4000 and CC-5000 of the ASME Code, Section III (Reference 3.8-2). Additional quality assurance requirements are also implemented as provided by RG 1.136 (Reference 3.8-3). Chapter 17 provides additional discussion of the QAP.

The information listed below is specifically for the PCCV and does not preclude the selection of site-specific material provided that they are rectified with the standard design and meet the ASME Code, Section III (Reference 3.8-2), SRP 3.8.1 (Reference 3.8-7), and RG 1.136 (Reference 3.8-3) requirements.

Concrete

It is the responsibility of the COL Applicant to select the site-specific concrete ingredients and to develop a concrete mix design that produces the concrete design strengths specified for the US-APWR PCCV and conform to all applicable material and quality control requirements.

Compressive Strength

The concrete design compressive strength for the PCCV is f'_c = 7,000 psi

The concrete design compressive strength for the basemat is f'_c = 4,000 psi

As previously discussed in Subsection 3.8.1.5, concrete is not allowed to rely on tensile strength to resist flexural and membrane tension except where permitted in ASME Code, Section III (Reference 3.8-2) allowable shear provisions. The concrete creep for the 60 year design life is 400μ in/in; for purposes of design, it is considered that 2/3 of this occurs in the first year after completion of prestressing. The concrete shrinkage for the 60 year design life is 150μ in/in; for purposes of design, it is considered that 2/3 of this creep occurs in the first year after completion of concrete placement. It is the responsibility of the COL Applicant to verify these concrete creep and shrinkage parameters by testing of the site-specific concrete mix, and the PCCV design analysis is revised if the final test results affect the conclusions of the PCCV calculation. Also, it is the responsibility of the COL Applicant to develop a site-specific specification that covers the concrete production and batch plant requirements. The specification defines the concrete constituents such as aggregates, cement, water, and admixtures that constitute

the mix design, cement grout, and production testing requirements. The materials comply with the requirements of Article CC-2200 of the ASME Code, Section III (Reference 3.8-2).

Additionally, it is the responsibility of the COL Applicant to determine the site-specific aggressivity of the ground water/soil and accommodate this parameter into the concrete mix design as well as into the site-specific structural surveillance program. As required by SRP 3.8.1 (Reference 3.8-7), for plants with nonaggressive ground water/soil (i.e., pH is greater than 5.5, chlorides are less than 500 ppm, and sulfates are less than 1,500 ppm), an acceptable program for normally inaccessible, below-grade concrete walls and basemats is to (1) examine the exposed portions of below-grade concrete for signs of degradation, when excavated for any reason; and (2) conduct periodic site monitoring of ground water chemistry, to confirm that the ground water remains nonaggressive. For plants with aggressive ground water/soil (i.e., exceeding any of the limits noted above), an acceptable approach is to implement a periodic surveillance program to monitor the condition of normally inaccessible, below-grade concrete for signs of degradation.

Liner Plate System

Liner Plate

The steel liner plate is designed as SA-516 Grade 60, 1/4 in. minimum thickness.

Where thickened for embedded plates, attachment bracket locations, openings, penetrations, and other such applications, the steel liner plate is SA-516 Grade 70. Grade 60 is used where justified in the design with respect to acceptance criteria previously discussed in Subsection 3.8.1.5.

The ASME Code, Section III (Reference 3.8-2) does not specifically require a corrosion allowance for the liner, and none is provided. The design of the PCCV is sufficient to prevent significant corrosion by protecting the liner against a corrosive environment. A suitable protective coating such as an epoxy coating is applied where necessary for corrosion protection, where suitability implies that the coating is DBA/LOCA-certified, resistant to break-down due to radiation exposure, and easily decontaminated. Further, corrosion allowance is accounted for in the design by demonstrating sufficient margin on the thickness to accommodate a small amount of corrosion that may occur over the 60-year design life.

It is the responsibility of the COL Applicant to produce a site-specific liner plate specification to define the material and welding requirements, testing and quality requirements. This Liner Plate System specification references Article CC-2500 of the ASME Code, Section III (Reference 3.8-2). Fracture toughness requirements for the liner plate material are in accordance with Subarticle CC-2520 (Reference 3.8-2).

The COL Applicant is to produce another site-specific specification for the PCCV personnel airlocks and equipment hatch. This specification refers to the ASME Code, Section III, Division 1 (Reference 3.8-2), which is applicable to metallic material not backed by concrete for load carrying purposes (refer to Subarticle CC-2112 for the delineation of jurisdiction). Fracture toughness requirements for materials for locks and hatch and other penetration assemblies subject to Division 1 of the ASME Code, Section III are in accordance with Article NE-2300 (Reference 3.8-2).

Liner Anchor System

The liner anchors that are tees, angles, flat bars, and miscellaneous shapes are SA-36 structural steel or material of comparable yield strength meeting the requirements of ASTM A-992.

Penetration Assemblies

Penetration assembly thickened plates are SA-516 Grade 70. Grade 60 may be used in some places where justified in the design. Penetration pipe sleeves/nozzles are SA-333 Grade 6. Flat head and collar material used at small-bore pipe penetrations (less than 3 in. nominal diameter) is SA-516, or any material listed in Appendix I of the ASME Code, Section III (Reference 3.8-2), which is compatible with the penetration nozzle and piping in terms of weldability.

Brackets and Attachments

Brackets and Attachments are SA-36 structural steel or material of comparable yield strength meeting the requirements of ASTM A-992.

Miscellaneous

The use of leak chases, although not an ASME Code requirement, is employed on the US-APWR in locations where the liner plate pressure boundary welds are not accessible after completion of construction. Leak chase material is SA-36 structural steel or ASTM A-992 or any other acceptable material in Mandatory Appendix I of the ASME Code, Section III (Reference 3.8-2).

Prestressing System

The material chosen for the design of the tendons meets the requirements of Article CC-2400 of the ASME Code, Section III (Reference 3.8-2). The prestressing system is designed as a strand system, however, the system material may be switched to a wire system at the choice of the COL Applicant. If this is done, the COL Applicant is to adjust the US-APWR standard plant tendon system design and details on a site-specific basis. The ultimate capacity of an individual tendon as designed is 2.9 million pounds; however, it may be supplied within a plus or minus 5% tolerance, which is accounted for in the prestressing and overall design.

All tendons are unbonded (ungrouted) and have the capability to be detensioned and retensioned to a higher value and have a wire or strand removed after detensioning during a tendon surveillance operation.

Tendon Material

A strand system is utilized for the US-APWR standard plant design based on the following description of material requirements:

- The strand systems are fabricated from ASTM A416, Grade 1860 #15, 0.5 in. diameter strands. The strands are of the low relaxation type. The relaxation losses are documented by a minimum of 3 manufacturer's tests performed as

required by ASME Code, Section III (Reference 3.8-2), Subarticle CC-2424 and under the conditions as specified by ASTM A416.

If a wire system is selected, the design is reviewed and prestressing system details adjusted to accommodate the following wire system material requirements:

- Wire systems are fabricated from ASTM A421, Type BA, 1/4 in. diameter solid wire. The wire is of the low relaxation type. The relaxation losses are documented by a minimum of three manufacturer's tests performed as required by ASME Code, Section III (Reference 3.8-2), Subarticle CC-2424 and under the conditions as described in ASTM A421 supplementary requirements for low-relaxation wire.

For either tendon system, the relaxation losses are not more than 2.5% when initially loaded to 70% of the minimum breaking strength or not more than 3.5% when loaded to 80% of specified minimum breaking strength of the strand after 1,000 hours of testing. The temperature of the test specimens are maintained at 68° ± 3.5°F. As recommended by RG 1.35.1 (Reference 3.8-6), there are to be a sufficient number of data points in each of the three tests to extrapolate the data to the 60 year design life of the PCCV at a sustained temperature of 90°F. The extrapolation is performed using regression analysis.

For both systems, as recommended in RG 1.35.1 (Reference 3.8-6) Section 2.3, the design provides allowances to accommodate breakage (during construction) of individual wires or strands in the tendons, on both an overall as well as a localized basis.

Anchorage Components

The tendon end anchorage material selected in the design meets the requirements of ASME Code, Section III (Reference 3.8-2), Subarticle CC-2430. Additional material requirements per RG 1.136 (Reference 3.8-3) follow.

- It is the responsibility of the COL Applicant to produce a site-specific specification that covers the material requirements for the Prestressing System. The specification defines the material and special material testing requirements and reference Article CC-2400 of the ASME Code, Section III (Reference 3.8-2) for items where applicable.

In addition to the requirements of ASME Code, Section III (Reference 3.8-2), Subarticle CC-2433.2.3, "Acceptance Standards," the following guidance per RG 1.136 (Reference 3.8-3) is used:

- The maximum hardness for material of anchor head assemblies and wedge blocks are not to exceed that of Rockwell C40. To maintain uniformity in hardness, the tolerance on a designated hardness number does not exceed ± 2.

In addition to the requirements in ASME Code, Section III (Reference 3.8-2), Subarticle CC-2434, "Wedges and Anchor Nuts," the following guidance is used to protect prestressing materials from low-temperature effects:

- Materials for all load-bearing components of prestressing systems should be selected so that they can withstand the anticipated low-temperature effects without a loss in their ductility. Methods and procedures similar to those used for materials of liners in Subarticle CC-2520, "Fracture Toughness Requirements for Materials," are acceptable for qualifying the materials. Additionally, suitable tests should be conducted to demonstrate that with the maximum allowable flaw size (cracked button heads, wedges, and anchor nuts); the specific components exhibit the required strength and ductility under the lowest anticipated temperatures.

In addition to the requirements of ASME Code, Section III (Reference 3.8-2), Subarticle CC-2463.1, "Static Tensile Test," the following guidance is used: Any system of prestressing should be subjected to a sufficient number of tests to establish its adequacy. Justification that a sufficient number of tests have been performed, as well as a description of the test program, should be available for NRC review.

Nonload-Carrying and Accessory Materials

Tendon duct, channel, trumpet, and transition cone material meets the requirements of ASME Code, Section III (Reference 3.8-2), Subarticle CC-2440. Corrosion prevention coatings are required for unbonded tendons and are in accordance with Subarticle CC-2442.

Reinforcing Steel Systems

The material is ASTM A615 Grade 60 or A615 Grade 75 (provided that ductility and splicing requirements are met), and meets the requirements of Article CC-2300 of the ASME Code, Section III (Reference 3.8-2).

Splicing material also meets the requirements of Article CC-2300 of the ASME Code, Section III (Reference 3.8-2).

It is the responsibility of the COL Applicant to produce a site-specific specification to define the material and special material testing requirements for the reinforcing steel system including bars and splices. All material conforms to Article CC-2300 of the ASME Code, Section III (Reference 3.8-2).

3.8.1.7 Testing and Inservice Inspection Requirements

Structural integrity testing of the PCCV is performed in accordance with Article CC-6000 of the ASME Code, Section III (Reference 3.8-2), RG 1.35 (Reference 3.8-5), and RG 1.35.1 (Reference 3.8-6). The testing meets the same requirements for ILRT and Containment Leakage Testing as given in RG 1.206 Subsection C.I.6.2.6 (Reference 3.8-1).

Preoperational structural testing is performed for the overall PCCV, equipment hatch and personnel airlocks in accordance with Article CC-3000 of the ASME Code, Section III (Reference 3.8-2).

It is the responsibility of the COL Applicant to establish a site-specific program for testing and ISI of the PCCV, including periodic inservice surveillance and inspection of the

PCCV liner and prestressing tendons in accordance with ASME Code Section XI, Subsection IWL (Reference 3.8-4).

Chapter 6 defines the ILRT requirements for the overall PCCV in addition to ILRT requirements for the penetrations and openings and containment isolation valves. The ILRT program meets the requirements of 10 CFR 50, Appendix J (Reference 3.8-18). Chapter 6 discusses the test and instrument plan, frequency of measurements, structural response predictions, and any other necessary requirements in accordance with Article CC-6000 of the ASME Code, Section III (Reference 3.8-2).

Specific structural requirements for the ILRT of the PCCV are based on RG 1.136 (Reference 3.8-3) and are summarized as follows:

Displacement Measurements

Displacement measurements of the PCCV as defined in ASME Code, Section III (Reference 3.8-2) Subarticle CC-6360 meet the following provisions.

- Radial displacements of the cylinder are measured at a minimum of five approximately equally spaced elevations located at 20%, 40%, 60%, 80%, and 100% of the distance between the base and the spring line. These measurements are made at a minimum of four approximately equally spaced azimuths. Measurement of the total displacement may be made between diametrically opposite locations on the PCCV wall. The radial displacement may be assumed to be equal to one-half of the measured change in diameter.
- Radial displacements of the PCCV wall adjacent to the largest opening, are measured at a minimum of 12 points, four equally spaced on each of three concentric circles. The diameter of the inner circle is just large enough to permit measurements to be made on the concrete rather than on the steel sleeve; the middle approximately 1.75 times the diameter of the opening; and the outer approximately 2.5 times the diameter of the opening. For hatch designs with thickened wall sections, the concentric circle at 1.75 times the diameter is relocated at the wall thickness discontinuity and the remaining circle is relocated approximately two wall thicknesses outside the discontinuity. The increase in diameter of the opening is measured in the horizontal and vertical directions. If other openings require structural verification as determined by the designer, displacement measurements are made in the same manner as stipulated for the largest opening.
- Vertical displacement of the top of the cylinder relative to the base is measured at a minimum of four approximately equally spaced azimuths.
- Vertical displacements of the dome of the PCCV are measured at a point near the apex and two other approximately equally spaced intermediate points between the apex and the spring line on at least one azimuth.

Concrete Crack Observations

At a minimum the following areas are observed based on the techniques defined in Subarticles CC-6225 and CC-6350 of the ASME Code, Section III (Reference 3.8-2) at these locations:

- The top or bottom of the equipment hatch opening at the edge of the opening.
- The top or bottom of the equipment hatch opening where the thickened area meets the normal shell.
- The center elevation of the equipment hatch opening where the thickened area meets the normal shell, on both sides.
- The cylinder where it intersects the basemat with the longer direction being 3 times the wall thickness.
- The cylinder midheight where it intersects the vertical buttress.
- At a typical cylinder midheight location away from buttresses and openings.
- The cylinder dome intersection.
- In the dome at about 45 degrees from the springline, where there are two overlapping sets of tendons (i.e., one vertical dome and one hoop dome).
- In the dome at about 45 degrees from the springline, where there are three overlapping sets of tendons (i.e., two vertical dome and one hoop dome).
- At the dome apex.

In general surveillances are scheduled after the structural integrity test starting at 1, 3, and 5 years and every 5 years thereafter. There is some flexibility to this as stated in ASME Code, Section XI, Subarticle IWL-2400 (Reference 3.8-4).

Sample Selection

ASME Code, Section XI (Reference 3.8-4) requires that measurements and sampling be performed on randomly selected tendons. The PCCV tendons are detensionable and are in compliance with this requirement.

Tendons are to be placed in groups with similar characteristics. For the US-APWR, the two basic groups are the inverted U-tendons and hoop tendons, which consist primarily of cylinder hoop tendons and also a smaller number of dome hoop tendons. The minimum requirements for sample selection are as discussed below. RG 1.35 (Reference 3.8-5) requires a 4% sample with a minimum of four tendons per group and ASME Code, Section XI (Reference 3.8-4) agrees, but there is some relaxation after 10 years. Both types have these amounts divided into two groups. Therefore, the 4% sample is taken as four U tendons and four cylinder hoop tendons. This amount also satisfies the minimum number. Two dome hoop tendons are provided in the design as sample tendons since the dome hoop tendons are of a slightly different geometry/configuration than the cylinder hoop tendons. These sample numbers are also based on the assumption that two tendons from each group may be detensioned at the same time and considering two more for wire or strand loss during construction or due to other reasons. Any hoop tendon that is fixed tendon such that it has lift-off test capability only are in the cylinder near the dome.

Acceptance Standards

The acceptance standards for both the RG and ASME Code, Section XI (Reference 3.8-4) are similar and both are satisfied. RG 1.35.1 (Reference 3.8-6) gives guidance on how to determine the tendon prestress loss curve as a function of time. The prestress loss curve is

determined based on regression analysis. For the US-APWR PCCV, the curve is for 60 years. A correction is allowed to account for initial installation force variation and elastic losses resulting from when in the prestressing sequence the tendon is tensioned. The acceptance criteria listed below are for values after these corrections have been applied, except the last five items, which apply regardless of corrections.

- The average lift-off of each group is equal to or above the minimum required prestress. For the PCCV, this would mean the average of all four inverted U tendons in the group and then the five hoop tendons in that group. Each of the groups has a different force time loss curves.
- For each tendon the measured lift-off value is equal to or above the predicted value at that surveillance time on the curve.
- An extrapolation of the average previous surveillance and the average current surveillance shows that the next surveillance has forces that are above or equal to the next surveillance for each group.
- The elongation during re-stressing does vary by more than 10% from the initial installation value.
- The test results for the removed strand or wire meet the applicable ASTM requirements for yield strength, ultimate strength and elongation.
- The corrosion protection material is in accordance with the applicable standards.
- The tendon anchorage areas do not show evidence of active corrosion and steel items do not show cracking or other deterioration.
- The concrete in the anchor head area does not show unacceptable cracking or any other deterioration.
- There is no evidence of free water in the prestressing system.

Additional Required Actions and Responsibilities

If any of the conditions listed above are not satisfied, an investigation and additional action must be taken for the required items, which are listed in the two applicable referenced documents.

3.8.2 Steel Containment

The US-APWR does not utilize a steel containment. Portions of the US-APWR design which fall under Division 1 of the ASME Code, Section III (Reference 3.8-2), which are pressure-retaining but not backed by concrete, have been discussed previously in Section 3.8.1.

3.8.3 Concrete and Steel Internal Structures of Concrete Containment

Concrete and steel structures internal to the PCCV, but not part of the containment pressure boundary, provide support of the RCS components and related piping systems and equipment. The containment internal structure is the primary support structure that provides compartmentalization and radiation shielding within the PCCV. The major structures internal to containment include:

- Reactor support system
- SG support system
- RCP support system
- Pressurizer support system
- Primary shield wall as part of containment internal structure
- Secondary shield walls as part of containment internal structure
- Reactor cavity and refueling cavity as part of containment internal structure
- Other structures internal to containment include additional supports, RWSP, the operating floor, intermediate floors and platforms, and polar crane supporting elements

These structures internal to containment are capable of resisting the design loads and load combinations to which they may be subjected. The containment internal structure mitigates the consequences of an accident by protecting the containment and other engineered safety features from the effects induced by an accident, such as jet impingement forces and whipping pipes.

3.8.3.1 Description of the Structures Internal to Containment

3.8.3.1.1 Reactor Vessel Support System

The RV support system consists of eight steel support pads which are integrated with the inlet and outlet nozzle forgings. The support pads are placed on support brackets, which are supported by an embedded steel structure on the primary shield wall elevation 35 ft, 7.25 in. The support system is designed for operating and accident load cases caused by seismic and postulated pipe rupture, including LOCAs. The supports are formed by sliding surfaces between the shim plates and support pads to allow radial thermal growth of the RCS and RV. The vessel position is maintained unchanged by controlling the horizontal load through the support brackets and the base plate. Figure 3.8.3-1 provides the detail of the RV supports and relationship with the primary shield wall.

3.8.3.1.2 Steam Generator Support System

The SG support system consists of an upper shell support structure at centerline elevation 96 ft, 7 in., an intermediate shell support structure at centerline elevation 75 ft, 5 in., and a lower shell support structure at centerline elevation 45 ft, 7.64 in.

The upper and intermediate shell supports are lateral restraints utilizing snubbers attached to structural steel brackets, while the lower support structure is constructed entirely of structural steel and provides both vertical and lateral support. All support systems are designed considering thermal expansion of piping. The support system also restrains horizontal movement of the SG in the event of earthquake or other DBAs.

Four columns support the vertical loads of the SG from the reinforced concrete slab at elevation 25 ft, 3 in. The upper and lower ends of the columns are pin-jointed to permit movement of the SGs caused by thermal expansion of piping. Figure 3.8.3-2 depicts the SG support system.

3.8.3.1.3 Reactor Coolant Pump Support System

Each RCP support system consists of a lateral support structure, and three support columns.

The lateral support structure at centerline elevation 42 ft, 7.69 in. is constructed entirely of structural steel. Both support structures are designed considering thermal expansion of piping. The support structure also restrains horizontal movement of the RCPs in the event of an earthquake or other DBAs.

The three support columns carry the vertical loads of the RCP from the reinforced concrete slab at elevation 25 ft, 3 in. The upper and lower ends of the supports are pin-jointed to permit movement of the pumps caused by thermal expansion of piping. Figure 3.8.3-3 depicts the RCP support system.

3.8.3.1.4 Pressurizer Support System

The pressurizer is supported by an upper support structure and a lower support skirt. The upper support structure constructed of four structural steel struts at centerline elevation 110 ft, 9 in. does not restrain movement by thermal expansion, but restrains horizontal movements in the event of design-basis earthquakes or accidents. The lower support structure supports the vertical load through a continuous structural steel skirt welded to the bottom of the pressurizer supported at elevation 59 ft, 1 in. Figure 3.8.3-4 depicts the pressurizer support system.

3.8.3.1.5 Primary Shield Wall

The RV is located at the center of the PCCV. Primary shield walls form the perimeter around the RV, which also serve to support the RV at elevation 35 ft, 7.25 in. The top of primary shield wall elevation is 46 ft, 11 in. The general primary drawings in Chapter 1 show the location and configuration. Isometrics of the primary shield walls are shown in Figure 3.8.3-5.

The primary shield wall and other walls inside containment are fabricated as steel-concrete (SC) module walls. The modules are formed using permanently placed carbon steel faceplates and web-plates with a nominal thickness of 1/2 in. The faceplates, connected by tie-bars, fabricated from solid carbon steel round bars, or by carbon steel web-plates, also function as formwork for concrete placed in the interior. The primary purpose of the tie-bars and web-plates is to stiffen and hold together the faceplates during handling, erection, and concrete placement. The nominal pitch of the tie-bar is 24 in. for the secondary shield walls. The primary functions of the web-plates are to mitigate faceplate stress concentration, maintain the SC module configuration, and stiffen corners of faceplates. Shear studs are welded to the inside faces of the steel faceplates. Where SC modules intersect, web-plates are installed in-line with faceplates to maintain continuity across the point of intersection. The nominal pitch of studs is 8 in. to 12 in. in both directions. Face plates are welded to adjacent plates with full penetration welds so that the weld is at least as strong as the plate. The SC module walls are welded at the base to a continuous embedded plate in the basemat. After erection, concrete is placed between the faceplates. Typical details of the SC modules are shown in Figure 3.8.3-7.

3.8.3.1.6 Secondary Shield Walls

The secondary shield walls surround the primary loops from the SG compartments. SC modules also form supports for intermediate floors and operating floors. The secondary shield walls are a series of walls that enclose the SGs and the pressurizer. Each of the four secondary shield wall compartments provides supports and houses a SG and RCL piping. The GA drawings in Chapter 1 show the location and configuration. Isometrics of secondary shield walls are shown in Figure 3.8.3-5.

3.8.3.1.7 Refueling Cavity

The cavity space directly above the RV and between concrete walls to the north is referred to as the refueling cavity. The refueling cavity connects to the fuel transfer tubes that penetrate the north end of PCCV. The floor of the refueling cavity varies in elevation from 19 ft, 4 in. to 46 ft, 11 in. The top of the refueling cavity is 76 ft, 5 in.

The walls of the refueling cavity are formed by SC modules, which are lined with stainless steel over the 1/2-in. thick carbon steel plates, referred to as “clad steel.” The ceiling and floor slabs are also lined with clad steel.

3.8.3.1.8 RWSP

The RWSP is located at the lowest part of the PCCV. The RWSP is formed by wall of SC modules using clad steel. A floor at elevation 3 ft, 7 in. is formed of clad steel in a layer of concrete that covers the containment liner and basemat. The ceiling is similarly lined with stainless steel. Subsection 6.2.1.1 provides a description of the RWSP layout and design features.

3.8.3.1.9 Interior Compartments

The containment internal structure includes several subcompartments designed to provide containment, radiation shielding, and protection of safety-related components. These compartments are formed by the secondary shield walls surrounding the primary loops from the SGs. They also protect the containment from postulated pipe ruptures inside the containment. These SC wall modules also form supports for intermediate floors and the operating deck at elevation 76 ft, 5 in. The walls are designed for load cases including earthquake and DBAs.

Subcompartments and/or rooms comprising the containment internal structure are summarized as follows:

- reactor cavity — EL. -9 ft, 2 in.
- containment drain sump room — EL. 9 ft, 6 in.
- letdown heat exchanger room — EL. 25 ft, 3 in.
- regenerative heat exchanger room — EL. 50 ft, 2 in.
- excess letdown heat exchanger room — EL. 50 ft, 2 in.

Labyrinths are provided beside the shield wall openings at several elevations for radiation protection, which consist of SC modules and reinforced concrete walls, floors, and ceilings.

Reinforced concrete slabs are used for the floor above the RWSP at elevation 25 ft, 3 in., the intermediate floor at elevation 50 ft, 2 in., and the operating floor at elevation 76 ft, 5 in. The floors are shown on the GA drawings in Chapter 1. The floor is at elevation 25 ft, 3 in., and is supported by the primary shield wall, the secondary shield wall, and the RWSP. The floors at elevations 50 ft, 2 in. and 76 ft, 5 in. are supported by the secondary shield wall and the structural steel framing (beams and columns) arranged between the secondary shield wall and the PCCV. The floors consist of reinforced concrete slab, placed on steel beams and deck plate.

3.8.3.1.10 SC Modules

Figure 3.8.3-5 provides isometric views of the SC modules.

The module framework, consisting of the steel faceplates prior to concrete placement, is positioned on the supporting reinforced concrete basemat. The SC modules are anchored to the basemat through reinforcement doweled with the slab. Seaming of adjacent plates is accomplished using full penetration welding that maintains full design strength of the plate units. The interior of the modular unit is filled with concrete to complete the installation process. Figure 3.8.3-6 depicts the containment internal structure compartment wall layout and configuration. Figure 3.8.3-7 provides typical details for the SC module construction including connection details and anchorage connection details to the reinforced concrete basemat.

3.8.3.1.11 Polar Crane Supports

An internal polar crane is supported by the PCCV. A continuous crane girder transfers the polar crane loads to the PCCV wall. Refer to Subsection 3.8.4.3 for loads applicable to the polar crane supports. Figure 3.8.3-8 depicts the polar crane supports layout and construction.

3.8.3.1.12 Structural Steel Framing

Structural steel framing within the interior of PCCV is primarily for support of floor slab, equipment, distribution systems such as piping, valves, and cable trays, and access platforms. Service platforms and secondary intermediate floors consist of steel grating or checkered plate supported by structural steel framing. All structural steel are capable of resisting the loads and load combinations to which they may be subjected.

3.8.3.2 Applicable Codes, Standards, and Specifications

Refer to Subsection 3.8.4.2 for industry standards applicable to the design and construction of seismic category I structures inside containment. Other codes, standards and specifications applicable to materials, testing and inspections are identified in Subsections 3.8.4.6 and 3.8.4.7.

3.8.3.3 Loads and Load Combinations

Typical loads and load combinations are detailed in Subsection 3.8.4.3. Load combinations to be utilized for the design of the containment internal structure include hydrostatic, pressure, and thermal loads as summarized below. Hydrostatic loads reflect the water inventory and its location during various plant conditions.

Seismic category I concrete structures are designed for impulsive and impactive loads in accordance with the ACI 349 Code (Reference 3.8-8), and special provisions of Appendix C of the same code, with exceptions given in RG 1.142 (Reference 3.8-19). Impactive and impulsive loads must be considered concurrent with seismic and other loads (i.e., dead and live load) in determining the required load resistance of structural elements.

Subcompartment pressure loads are the result of postulated high-energy pipe ruptures. In determining an appropriate equivalent static load for Y_r, Y_j, and Y_m, elasto-plastic behavior is acceptable with appropriate ductility ratios, provided excessive deflections do not result in loss of function of any safety-related system.

3.8.3.3.1 Floor Loads Inside Containment

Table 3.8.3-1 shows the type of construction and dead weight of the floor section for various containment internal structure locations.

The following are the minimum values for live loads used in load combinations involving non-seismic loads. Live loads for the seismic analysis are defined in Subsection 3.8.4.3.

Containment operating deck	950 lb/ft^2 (during maintenance and refueling outages) 200 lb/ft^2 (during normal operation)
Maintenance and service platforms	The load is calculated for individual locations based on the functional requirements and service equipment
All other floors (ground floor and elevated floors, including stairs and walkways)	200 lb/ft^2 (For non-seismic load combinations and for global seismic analysis, this load may be reduced if the equivalent live load on the floor is more than 50 lb/ft^2. The sum of the live load and equivalent live load need not exceed 250 lb/ft^2)

In design reconciliation analysis, if actual loads are determined to be lower than the above loads, the actual loads may be used for reconciliation. Floor live loads for design are not reduced below 100 lb/ft^2.

3.8.3.3.2 Liquid Loads (F)

The vertical and lateral pressures of liquids inside containment are treated as dead loads. Structures supporting fluid loads during normal operation and accident conditions are designed for the hydrostatic as well as hydrodynamic loads.

Hydrostatic loads are based on the tank or flooded volume. The water inventory is considered to be in any one of the following locations with other areas being dry.

RWSP	Water in the RWSP. Normal water level is elevation 19 ft, 4 in.
Refueling Cavity	Water in the refueling cavity during refueling operations. Normal water level during refueling is elevation 75 ft, 2 in.

The overall seismic analyses and ISRS considers the water to be in the RWSP, which is its normal location. Water inventory at any one of these locations is also considered as a normal operating liquid load. In the event of a SSE, the containment internal structure is designed with the water inventory in any one of the above locations.

Out-of-plane seismic loads due to the water in the RWSP are applied as linearly increasing from 22.2 psi at the ceiling to 32.2 psi at the base of the pit SC module walls. These pressures include the seismic sloshing (convective) pressures, as well as the seismic inertia (impulsive) pressures.

3.8.3.3.3 Accident Pressure Load (P_a)

Accident pressure loads within or across a compartment and/or building are considered in the design. Differential pressure is generated by postulated pipe rupture and includes the dynamic effects due to pressure time-history. The containment internal structure subcompartments are designed to the pressures shown in Table 3.8.3-2 and identified on Figure 3.8.3-9. These pressures are combined by SRSS with SSE loads, including sloshing loads, or by using more conservative combinations. The water inventory is assumed to be in the RWSP. Steel floors with grating need not be designed for differential pressure.

3.8.3.3.4 Operating Thermal Loads (T_o)

The normal operating environment inside and outside the PCCV is specified in Table 3.8.1-3. Under the normal operating condition, the primary shield wall, and the secondary shield wall (in the proximity of the main steam and feedwater pipes) experience temperature rises, including temperature distribution through the wall thicknesses. The loads resulting from these thermal gradients provided in Table 3.8.1-3 are combined with other loads for the containment internal structure as specified in the load combinations in Table 3.8.4-3.

3.8.3.3.5 Accident Thermal Load (T_a)

Thermal loads due to temperature gradients caused by the postulated pipe breaks are considered in the design. The temperature gradients are calculated using the temperatures corresponding to LOCA and MSLB, or a spent fuel pit accident, and are

presented in Table 3.8.1-3. Local areas are designed for the elevated temperature effects and the loads resulting from the postulated accidents.

During a postulated pipe break, the concrete walls in the vicinity experience temperature increases at the surface following the accident. However, since the concrete is a poor heat conductor, considerable time must elapse before the entire wall experiences an increase in the temperature. Other loads such as accident pressure load, seismic load, etc., are of very short duration. This difference in the transients is considered when combining T_a with other loads.

Temperatures during an accident do not exceed 350°F at the surface. However, local areas are allowed to reach 650°F from steam or water jets in the event of a pipe failure. General design requirements for concrete subject to thermal loads may be found in Appendix A of ACI 349 (Reference 3.8-8).

3.8.3.3.6 Accident Thermal Pipe Reaction (R_a)

Pipe and equipment reactions under thermal conditions are generated by the postulated pipe break and includes R_o (see Subsection 3.8.4.3).

3.8.3.3.7 Reaction Due to Pipe Ruptures (Y_r)

The load on a structure generated by the reaction of a ruptured high-energy pipe during the postulated event includes an appropriate dynamic load factor. The time dependent nature of the load and the ability of the structure to deform beyond yield are considered in establishing the structural capacity necessary to resist the effects of Y_r.

3.8.3.3.8 Jet Impingement (Y_j)

The load on a structure generated by the jet impingement from a ruptured high-energy pipe during a postulated event includes an appropriate dynamic load factor. The time-dependent nature of the load and the ability of the structure to deform beyond yield are considered in establishing the structural capacity necessary to resist the effects of Y_j. The dynamic load factor is calculated using a long duration step function for the load. The target resistance is idealized as bilinear elasto-perfectly plastic.

3.8.3.3.9 Impact of Ruptured Pipe (Y_m)

The load on a structure or a pipe restraint resulting from the impact of a ruptured high-energy pipe during the postulated event includes an appropriate dynamic load factor. The type of impact (i.e., plastic, elastic), together with the ability of the structure to deform beyond yield are considered in establishing the structural capacity necessary to resist the impact.

3.8.3.4 Design and Analysis Procedures

Concrete and steel composites are commonly used in construction because of the inherent benefits of the steel tensile strength in concrete sections. The fundamental difference between the conventional reinforced concrete and SC modular construction is that the reinforcement and formwork of conventional reinforced concrete is replaced by the steel faceplates of the SC. For walls within the US-APWR, additional benefits are

realized by providing formwork during construction, improved construction staging and schedule, continuous steel surfaces for welding of field attachments, and impactive/impulsive capacities as applicable. If required to be qualified as radiation shielding, the requirements and recommended practices are maintained in accordance with RG 1.69 (Reference 3.8-20). Assurances that SC modules for interior compartments of the US-APWR meet or exceed the requirements of ACI-349 (Reference 3.8-8) are provided by the following design and analysis procedures.

The permanently-placed faceplates act as forms during the placement of concrete. Plate stresses occurring during concrete placement are conservatively assumed simply supported spans between tie bars. Faceplates fabricated from A572 high-strength low-alloy Columbium-Vanadium structural steel provide minimum yield strength of 50 ksi or greater, and maintain out-of-plane plate deflection to within code allowables.

Stresses are induced on faceplates acting as formwork during concrete placement, however, they are not applicable during other load combinations. After concrete curing, the SC module performs as a composite section of concrete with outer faceplates acting as either compression or tension reinforcement. The composite section is designed to allow faceplate yielding prior to the concrete reaching its strain limit of 0.003 in. per in. Under tensile straining, the residual stress that was initiated by concrete placement is naturally relieved. While the formwork is permanently placed, the stresses generated by construction activities are therefore not applicable during other load combinations.

The SC module forms a composite section once the concrete has reached sufficient strength, consisting of steel faceplates that carry in-plane tension or compression from axial loads and out-of-plane bending. Structural behavior of composite sections used as SC modules inside containment is, therefore, similar to conventional concrete reinforced by steel. Research regarding in-plane loading of composite sections consisting of steel faceplates and concrete infill is described in “Experimental Study on Steel Plate Reinforced Concrete Shear Walls with Joint Bars” (Reference 3.8-21) and “A Compression and Shear Loading Test of Concrete Filled Steel Bearing Wall” (Reference 3.8-22). Out-of-plane loading research is provided by “Experimental Studies on Composite Members for Artic Offshore Structures, Steel/Concrete Composite Structural Systems” (Reference 3.8-23), “Strength of Composite System Ice-Resisting Structures, Steel/Concrete Composite Structural Systems” (Reference 3.8-24), “Design and Behaviour of Composite Ice-Resisting Walls, Steel/Concrete Composite Structural Systems” (Reference 3.8-25), and “Tests on Composite Ice-Resisting Walls Steel/Concrete Composite Structural Systems” (Reference 3.8-26). In addition, “1/10th Scale Model Test of Inner Concrete Structure Composed of Concrete Filled Steel Bearing Wall” (Reference 3.8-27) provides research regarding in-plane loading of composite sections, and supports the conclusion there are significant advantages of SC modules over conventional reinforced concrete, such as high strength, high ductility, and less decrease of stiffness, over reinforced concrete elements of equivalent thickness and reinforcement ratios.

Methods of analysis for the SC modules are similar to the methods used for reinforced concrete. Table 3.8.3-3 summarizes the modeling and analytical methods used for SC modules inside containment. The determination of section properties are in accordance with ACI-349 (Reference 3.8-8). For all loads, the analyses use the monolithic (uncracked) stiffness of each concrete element. For thermal loads, design forces are calculated by multiplying the reduction ratio α, considering the reduction of stiffness by

cracking to the result values of above analysis. The reduction ratio α is set to 0.5 as the reduction ratio of flexural stiffness caused by cracking for the typical member. For example, the flexural stiffness of cracked section for 48 in. wall with 0.5 in. plates assuming zero tensile strength of concrete is 22.2 by 10^9 lbs-in.^{2}/in., and the reduction ratio calculated by this value and elastic flexural stiffness (47.5 x 10^9 lbs-in.^{2}/in.) is 0.47.

Table 3.8.3-4 summarizes axial, in-plane shear and out-of-plane flexural stiffness properties of the 56-in., 48-in. and 39-in. walls based on a series of different assumptions. The stiffnesses are expressed for unit length and height of each wall.

Case 1 assumes monolithic behavior of the steel plate and uncracked concrete. This stiffness is the basis for the stiffness of the SC modules in the seismic analyses and the stress analysis.

Case 2 assumes that the concrete in tension has no stiffness. For the flexural stiffness this is the conventional stiffness value used in working stress design of reinforced concrete sections.

The report "1/10th Scale Model Test of Inner Concrete Structure Composed of Concrete Filled Steel Bearing Wall" (Reference 3.8-27) provides damping of the SC modules based on the cyclic load tests of an containment internal structure model. The SC module exhibited 5 % equivalent viscous damping at the design load level. This remained nearly constant up to the load level where yielding was reached in the steel plate. Therefore, dynamic analyses as described in Subsection 3.7.1 are performed using 7 % damping for the reinforced concrete and 5 % for the SC modules.

3.8.3.4.1 SC Module Stress Analyses

The design forces and moments for each member of the containment internal structure are calculated by the stress analysis using a three-dimensional FE model. The model is shown in Figure 3.8.3-10. The SC modules are simulated within the FE model using three-dimensional shell plate bending elements. Equivalent elastic stiffnesses of the SC modules are computed as shown below. The application of more detailed FE analysis is acceptable for qualifying modules subject to extreme conditions such as high accident temperatures. The shell element properties are computed using the combined concrete section and the steel faceplates of the SC modules. This representation models the composite behavior of the steel and concrete.

- Axial and Shear Stiffnesses of SC Modules:

$$\Sigma EA = E_cA_c + E_sA_s,\ \Sigma\ GA = G_cA_c + G_sA_s$$
$$A_c = L(t - 2t_s),\ A_s = 2Lt_s,\ G_c = E_c/2(1+\nu_c),\ G_s = E_s/2(1+\nu_s)$$

- Bending Stiffness of SC Modules:

$$\Sigma EI = E_cI_c + E_sI_s$$
$$I_c = L(t - 2t_s)^3/12,\ I_s = Lt^3/12 - I_c$$

where:

E_c or E_s = modulus of elasticity for concrete or steel
ν_c or ν_s = Poisson's ratio for concrete or steel
L = length of SC module

t = thickness of SC module
t_s = thickness of plate on each face of SC module

3.8.3.4.2 Hydrodynamic Analyses

The vertical and lateral pressures of liquids inside containment are treated as dead loads. Structures supporting fluid loads during normal operation and accident conditions are designed for the hydrostatic as well as hydrodynamic loads. ASCE 4-98 Subsection 3.5.4.3, states “The fluid slosh height may be determined based upon the assumption of a rigid tank shell.”

3.8.3.4.3 Thermal Analyses

The RWSP water and containment operating atmosphere’s temperature is considered stable. The operating thermal load for each concrete member is calculated as the average and gradient based on this condition. The stress analysis is carried out by inputting these loads into the corresponding part of R/B whole FE model. The normal thermal stresses for design are calculated in accordance with Appendix A of ACI 349 (Reference 3.8-8). The analysis reduction factor and modeling methods are shown in Table 3.8.3-3 and Table 3.8.3-4.

The RWSP water and containment atmosphere are subject to temperature transients in the event of a LOCA as described in Subsection 3.8.3.3. The accident temperature transients result in a nonlinear temperature distribution within the members. Temperatures within the concrete members are calculated in a unidimensional heat flow analysis. The accident thermal load (average and equivalent linear gradients) is calculated from this analysis, at selected times during the transient.

The stress analysis is carried out by inputting the accident thermal load into the corresponding part of R/B whole FE model, as well as other parts. The stresses of containment are used for containment design. Though the stresses of containment internal structure are also obtained at the same time, since these self-limiting stresses are released in ultimate condition under such as extreme and abnormal load conditions, they are not taken into account in calculation of required reinforcement steel.

Thermal transients for the DBAs are described in Section 6.3.

3.8.3.4.4 Design Procedures

The concrete members of the containment internal structure are designed by the strength method, as specified in the ACI “Code Requirements for Nuclear Safety-Related Structures”, ACI-349 (Reference 3.8-8).

The primary and secondary shield walls, RWSP, refueling cavity, and other structural walls are designed using SC modules. SC modules are designed as reinforced concrete structures in accordance with the requirements of ACI-349 (Reference 3.8-8), as supplemented in the following paragraphs.

Floor slabs of reinforced concrete are designed as reinforced concrete structures in accordance with ACI-349 (Reference 3.8-8). The floors of elevation 76 ft, 5 in. (Operating floor) and elevation 50 ft, 2 in. are supported by structural steel framing.

Methods of analysis used are based on accepted principles of structural mechanics and are consistent with the geometry and boundary conditions of the structures.

The safe shutdown earthquake loads are determined from the results of seismic response analysis described in Section 3.7.

The determination of pressure and temperature loads due to pipe breaks is described in Subsections 3.6.1 and 6.2.1.2. Subcompartments inside containment containing high energy piping are designed for pressurization loads of 2 to 39 psi.

Determination of RCL support loads is described in Subsection 3.9.3. Design of the RCL supports are in accordance with ASME Code, Section III, Division 1, Subsection NF (Reference 3.8-2) as described in Subsections 3.9.3.

Computer codes used are general purpose codes. The code development, verification, validation, configuration control, and error reporting and resolution are according to the Quality Assurance requirements of Chapter 17.

3.8.3.4.5 SC Modules Design and Analysis

The SC modules are designed for dead, live, thermal, pressure, and safe shutdown earthquake loads. The RWSP walls are also designed for the hydrostatic head due to the water in the pit and the hydrodynamic pressure effects of the water due to the safe shutdown earthquake loads. The walls of the refueling cavity are also designed for the hydrostatic head due to the water in the refueling cavity.

Figure 3.8.3-7 shows the typical design details of the SC modules, typical configuration of the SC modules, typical anchorages of the SC modules to the reinforced base concrete, and connections between adjacent walls. SC modules are designed as reinforced concrete structures in accordance with the requirements of ACI-349 (Reference 3.8-8), as supplemented in the following paragraphs. The faceplates are considered as the reinforcing steel, bonded to the concrete by headed studs. The design of critical sections is described in Subsection 3.8.3.5.

3.8.3.4.5.1 Design for Axial Loads and Bending

Design for axial load (tension and compression), in-plane bending, and out-of-plane bending is in accordance with the requirements of ACI-349, Chapters 10 and 14 (Reference 3.8-8).

This design approach recognizes behavior of the SC module is similar to that of reinforced concrete. The steel plate is similar to standard tensile reinforcement in each of 2 designing orthogonal directions, as concluded by the test results of References 3.8-21 through 3.8-27.

3.8.3.4.5.2 Design for In-Plane Shear

Design for in-plane shear is in accordance with the requirements of ACI-349, Chapters 11 and 14 (Reference 3.8-8). The steel faceplates are treated as reinforcement for the concrete, and satisfy the requirements of Section 11.10 of ACI-349 (Reference 3.8-8).

This design approach is based on behavior of the SC module that is similar to reinforced concrete, which is supported by the test results of References listed in Subsection 3.8.3.4. The steel plate acts as shear reinforcement in each of 2 designing orthogonal directions, similar to that of standard concrete reinforcement.

3.8.3.4.5.3 Design for Out-of-Plane Shear

Design for out-of-plane shear is in accordance with the requirements of ACI-349, Chapter 11 (Reference 3.8-8).

The design approach is based on the premise that the behavior against out-of-plane shear and the effect of shear reinforcement of the SC module are similar to those of reinforced concrete. This methodology is supported by the test results of References listed in Subsection 3.8.3.4.

3.8.3.4.5.4 Evaluation for Thermal Loads

The acceptance criterion for the load combination with normal thermal loads, which includes the thermal transients described in Subsection 3.8.3.4, is that the overall stress in general areas of the steel plate be less than yield. In local areas where the stress may exceed yield, the total stress intensity range is less than twice yield. This evaluation of thermal loads is based on the ASME Code philosophy for Level A service loads given in ASME Code, Section III (Reference 3.8-2), Subsection NE, Paragraphs NE-3213.13 and NE-3221.4.

3.8.3.4.5.5 Design of Tie Bar

The tie bars provide a structural framework for the SC modules with faceplates, maintain the separation between the faceplates, support the SC modules during transportation and erection, and act as "form ties" between the faceplates when concrete is being placed. After the concrete has cured, the tie bars are not required to contribute to the strength or stiffness of the completed SC modules. However, they do provide additional shear capacity between the steel plates and concrete as well as additional strength similar to that provided by stirrups in reinforced concrete. The tie bars are designed as “form ties” according to the requirements of AISC-N690 (Reference 3.8-9) and designed as out-of-plane shear reinforcement according to the requirements of ACI-349 (Reference 3.8-8).

3.8.3.4.5.6 Design of Shear Studs

The SC modules are designed as reinforced concrete elements, with the faceplates serving as reinforcing steel. Since the faceplates do not have deformation patterns typical of reinforcing steel, shear studs are provided to transfer the forces between the concrete and the steel faceplates. The shear studs make the concrete and steel faceplates interact compositely. In addition, the shear studs permit anchorage for piping and other items attached to the walls.

3.8.3.4.6 Floor Slab

The floor slab of reinforced concrete is analyzed and designed according to ACI 349 (Reference 3.8-8) considering the same loads as for the SC modules. The floor design does not rely on composite action with supporting structural steel beams.

3.8.3.4.7 Structural Steel Design and Analysis

Structural steel framing within the interior of the PCCV is primarily for support of floor slabs, equipment, distribution systems, and access platforms. Design and analysis procedures, including assumptions on boundary conditions and expected behavior under loads, are in accordance with the allowable stress design (ASD) method in AISC-N690 (Reference 3.8-9). Analysis methods are generally simple calculations using seismic accelerations obtained from Section 3.7 methodologies in load combinations. Frame connections are detailed for simply-supported beams unless otherwise analyzed and detailed.

3.8.3.4.8 RCL Supports

The RCL piping and support system is analyzed for the dynamic effects of a SSE. A coupled model of the containment internals and the RCS is dynamically evaluated using a time-history integration method of analysis. Appendix 3C provides additional information regarding the qualification of RCL supports.

3.8.3.5 Structural Acceptance Criteria

Structural acceptance criteria is reflected in Table 3.8.4-3 for concrete structures and Table 3.8.4-4 for steel structures, and are in accordance with ACI-349 (Reference 3.8-8) and AISC-N690 (Reference 3.8-9), except as provided in the table notes.

3.8.3.5.1 Design Report

A Design Report of the containment internal structure is provided separately from the DCD. The Design Report has sufficient detail to show that the applicable stress limitations are satisfied when components are subjected to the design loading conditions.

Deviations from the design due to as-procured or as-built conditions are acceptable based on an evaluation consistent with the methods and procedures of Section 3.7 and 3.8 provided the following acceptance criteria are met.

- The structural design meets the acceptance criteria specified in Section 3.8.
- The ISRS meet the acceptance criteria specified in Subsection 3.7.2.5.

Depending on the extent of the deviations, the evaluation may range from documentation of an engineering judgment to performance of a revised analysis and design. The results of the evaluation are documented in an as-built summary report.

3.8.3.5.2 Design Summary of Critical Sections

This subsection summarizes the design of the following critical sections:

- Wall 1 - North-east wall of refueling cavity (4 ft, 8 in. thick)
- Wall 2 - North-west wall of secondary shield (4 ft, 0 in. thick)
- Wall 3 - North-east wall of RWSP (3 ft, 3 in. thick)

Critical portions of the SC modules occur at the largest stresses in each wall as defined in Table 3.8.3-5 and Figure 3.8.3-11. The structural configuration and typical details are shown in Figures 3.8.3-5, 3.8.3-6, 3.8.3-7, and 3.8.3-10. The structural analyses described in Subsection 3.8.3.4 are summarized in Table 3.8.3-6. The design procedures are described in Subsection 3.8.3.4.

3.8.3.6 Materials, Quality Control, and Special Construction Techniques

Subsection 3.8.4.6 contains information pertaining to the materials, quality control programs, and any special construction techniques utilized in the construction of seismic category I structures for the US-APWR.

3.8.3.6.1 Special Construction Techniques

Special module construction techniques, in addition to the methodology described in Subsection 3.8.3.1, is provided as necessary in a later supplement to the DCD.

3.8.3.7 Testing and Inservice Inspection Requirements

Monitoring of seismic category I structures is performed in accordance with the requirements of NUMARC 93-01 (Reference 3.8-28) and 10 CFR 50.65 (Reference 3.8-29) as detailed in RG 1.160 (Reference 3.8-30), specifically Section 1.5 of RG 1.160. Subsection 3.8.4.7 describes the applicable testing and ISI requirements.

3.8.3.7.1 Construction Inspection

Inspection relating to the construction of seismic category I SSCs is in accordance with the codes applicable to the construction activities and/or materials. In addition, weld acceptance is performed in accordance with the National Construction Issues Group (NCIG), Visual Weld Acceptance Criteria for Structural Welding at Nuclear Power Plants, NCIG-01 (Reference 3.8-31).

3.8.4 Other Seismic Category I Structures

Seismic category I structures include those standard plant buildings which house safety-related systems and components, except the PCCV (Subsection 3.8.1) and compartmentalization internal to the PCCV (Subsection 3.8.3). Distribution subsystems are also included in this discussion, such as safety-related HVAC ducts, conduits, cable trays, and their respective seismic category I supports.

US-APWR standard plant seismic category I structures and subsystems are designed for a SSE which is equivalent to the CSDRS defined in Subsection 3.7.1.1. Major US-APWR standard plant seismic category I structures with seismic designs based on the CSDRS are identified as:

- R/B

- East and west PS/Bs

Discussion of design methodology, applicable loads, load combinations and acceptance criteria within this subsection is applicable for the R/B structures and the east and west PS/Bs, which are part of the US-APWR standard plant.

The COL Applicant is responsible for the seismic design of those seismic category I and seismic category II SSCs not part of the US-APWR standard plant, including the following non-standard seismic category I structures designed to the site-specific SSE:

- ESWPT
- UHSRS
- PSFSVs

Non-standard seismic category I SSCs are site-specific, and are designed for the site specific or more conservative SSE based on the ground motion response spectra, the site-specific foundation input response spectra, and the minimum response spectrum as described in Subsection 3.7.1.1.

3.8.4.1 Description of the Structures

Seismic category I buildings, except the R/B, PCCV, and containment internal structure, are free standing on separate concrete basemats and are primarily reinforced concrete structures. The R/B, PCCV, and containment internal structure share a common basemat; however, they are otherwise independent of each other. Adjoining building basemats are structurally separated by a 4 in. gap at and below the grade. This requirement does not apply to engineered mat fill concrete that is designed to be part of the basemat subgrade for the interface between the R/B, and east and west PS/Bs. To be consistent with seismic modeling requirements of Section 3.7, no 4 in. gap is permitted in the fill concrete between these buildings.

The minimum gaps between building superstructures is two times the absolute sum of the maximum displacement of each building under the most unfavorable load combination, or a minimum of 4 in.

3.8.4.1.1 R/B

The R/B has five main floors. The building contains the PCCV and containment internal structure at its center, and is founded on a common basemat. The outer perimeter of the R/B is nearly square, and is constructed of reinforced concrete walls, floors, and roofs. The roof of the R/B varies between elevations 101 ft, 0 in. to 124 ft, 0 in., except the PCCV dome which extends to elevation 232 ft, 0 in.

The R/B consists of the following five areas, defined by their functions.

- PCCV and containment internal structure
- Safety system pumps and heat exchangers area
- Fuel handling area
- Main steam and feed water area

- Safety-related electrical area

The PCCV is discussed in detail in Subsection 3.8.1. The PCCV includes the containment internal structure comprising the primary shield wall and interior compartmentalization which are discussed in Subsection 3.8.3. Outside the PCCV and part of the R/B is the annulus. The annulus, which consists of concrete walled areas around the PCCV, serves a secondary containment function, and is made up of all areas with containment penetrations. It is maintained at a slightly negative pressure to control release of any radioactive materials to the environment.

The safety system pumps and heat exchanger areas are located at the lowest level of the R/B to secure the required net positive suction head. The safety system heat exchangers are located on the upper floor.

The fuel handling area is located on the plant northern side of the R/B at the same level as the CV operating floor, and houses the following facilities:

- Spent fuel pit crane
- Fuel transfer system
- Cask loading pit with the fuel handling area crane
- New fuel pit
- Decontamination pit
- Spent fuel pit and storage racks

The main steam and feed water area is located on the plant southern side of the R/B, between the PCCV and the turbine building (T/B). The piping rooms are located on the top floor of this area where they pass between the PCCV and T/B.

The safety-related electrical area has two floors located on the plant southern side of the R/B and under the main steam and feed water area. This is a non-radioactive zone and is completely separated from the radioactive zones of the R/B. This area houses the following safety-related facilities.

- main control room (MCR)
- Switchgear and batteries
- Instrumentation and control cabinet room

Four redundant safety systems containing radioactive material are located in each zone of the four quadrants surrounding the containment structure. Each of the quadrant areas is separated by a physical barrier to assure that the functions of the safety-related systems are maintained in the event of postulated incidents such as fires, floods, and high energy pipe break events.

Non-radioactive safety systems such as the ESWS, CCWS and electrical system, etc., are located in the plant southern area of the R/B. This area is also separated into four divisions by a physical barrier to assure that the functions of the safety-related systems are maintained in the event of postulated incidents such as fires, floods, and high energy line break events.

3.8.4.1.2 PS/Bs

The east and west PS/Bs are arranged adjacent to the R/B; one to the east and one to the west. These buildings are free-standing on a reinforced concrete basemat. Each building contains two emergency power sources and one alternate power source which are separated from each other by a physical barrier. In addition, the safety-related chillers are also located in these buildings.

Details of the design and analysis of the east and west PS/Bs are provided in Subsection 3.8.4.4.

3.8.4.1.3 ESWPT, UHSRS, PSFSVs, and Other Site-Specific Structures

The ESWPT is an underground seismic category I structure constructed of reinforced concrete. Terminating in part under the T/B, the structure is isolated from other structures to prevent any seismic interaction. The other termination point is the UHSRS at the source of the ESWS. The UHSRS consist of a cooling tower enclosure, ESWS pump houses, and the UHS basin. The PSFSVs are underground structures which house the safety-related and non safety-related fuel oil tanks.

The design and analysis of the ESWPT, UHSRS, PSFSVs, and other site-specific structures are to be provided by the COL Applicant based on site-specific seismic criteria.

3.8.4.1.4 Heating, Ventilating and Air Conditioning Ducts and Duct Supports

Seismic category I HVAC ducts and duct supports are routed as necessary to supply safety-related functions of air distribution. Appendix 3A describes the qualification of HVAC ducts and duct supports.

3.8.4.1.5 Conduits and Conduit Supports

Seismic category I conduits and conduit supports are routed as necessary to supply safety-related Class-1E cable. The conduit consists of a metal wall of minimum thickness as specific, and is assembled using standard industry fittings and clips. Appendix 3F describes the qualification of conduits and conduit supports.

3.8.4.1.6 Cable Trays and Cable Tray Supports

Seismic category I cable trays and cable tray supports are routed as necessary to supply safety-related Class-1E cable. Cable trays are manufactured using thin-gauge steel channels, and supports are constructed using cold formed or rolled steel shapes. Appendix 3G describes the qualification of cable trays and cable tray supports.

3.8.4.2 Applicable Codes, Standards, and Specifications

The following industry standards are applicable for the design and construction of seismic category I structures and subsystems. Other codes, standards and specifications applicable to materials, testing and inspections are provided in Subsections 3.8.4.6 and 3.8.4.7.

- ACI 318-99, Building Code Requirements for Structural Concrete, American Concrete Institute, 1999 (Reference 3.8-32).
- ACI 349-01, Code Requirements for Nuclear Safety-Related Concrete Structures, American Concrete Institute, 2001 (Reference 3.8-8).
- ANSI/AISC N690-1994, Specification for the Design, Fabrication and Erection of Steel Safety-Related Structures for Nuclear Facilities, including Supplement 2 (2004), American National Standards Institute/American Institute of Steel Construction, 1994 & 2004 (Reference 3.8-9).
- ANSI/ANS-57.7 Design Criteria for an Independent Spent Fuel Storage Installation (Water Pool Type), American National Standards Institute/American Nuclear Society, 1997 (Reference 3.8-33).
- ASCE 4-98, Seismic Analysis of Safety-Related Nuclear Structures and Commentary on Seismic Analysis of Safety-Related Nuclear Structures, American Society of Civil Engineers, 1998 (Reference 3.8-34).
- ASCE 7-05, Minimum Design Loads for Buildings and Other Structures, American Society of Civil Engineers, 2005 (Reference 3.8-35).
- ASCE 37-02, Design Loads on Structures During Construction, American Society of Civil Engineers, 2002 (Reference 3.8-36).
- ASME BPVC-III, Rules for Construction of Nuclear Facility Components - Section III Division 1 - Subsection NF - Supports, American Society of Mechanical Engineers, 2001 Edition through the 2003 Addenda (Reference 3.8-2).
- ASME NQA-2-1983, Quality Assurance Requirements for Nuclear Power Plants, with ASME NQA-2a-1985, Addenda to ASME NQA-2-1983, American Society of Mechanical Engineers (Reference 3.8-37).
- Specification for the Design of Cold-Formed Steel Members. 1996 Edition and Supplement No 1, American Iron and Steel Institute, July 30, 1999 (Reference 3.8-38).
- ACI-304R, Guide for Measuring, Mixing, Transporting, and Placing Concrete, American Concrete Institute, 2000 (Reference 3.8-39).

Appendix 3A, Section 3A.2, lists the applicable codes, standards and specifications for HVAC ducts and duct supports. Appendix 3F, Section 3F.2, lists the applicable codes, standards and specifications for conduit and conduit supports. Appendix 3G, Section 3G.2, lists the applicable codes, standards and specifications for cable trays and cable tray supports.

3.8.4.3 Loads and Load Combinations

Loads considered in the design are listed below. Not all loads listed are necessarily applicable to all structures and their elements. The loads for which each structure is designed are dependent on the applicable conditions.

The COL Applicant is to identify any applicable externally generated loads. Such site-specific loads include those induced by floods, potential non-terrorism related aircraft crashes, explosive hazards in proximity to the site, and projectiles and missiles generated from activities of nearby military installations. Loads that are due to

malevolent vehicle assault, aircraft impact, and accidental explosion are taken as W_t in load combination 5 in accordance with RG 1.142 (Reference 3.8-19), Regulatory Position 7. Externally generated loads are not normally postulated to occur simultaneously with abnormal plant loads; however, the applicable loads and the related load combinations are determined on a case-by-case basis.

3.8.4.3.1 Dead Loads (D)

Dead loads are taken as the weight of all permanent construction/installations including fixed equipment and tanks. Uniform and/or concentrated dead loads are generally utilized for design of individual members. Equivalent dead loads are used during global analyses as conservative uniform load allowances of minor equipment and distribution systems, including small bore piping.

3.8.4.3.1.1 Dead Loads (Uniform and/or Concentrated)

Dead loads include the weight of structures such as slabs, roofs, decking, framing (beams, columns, bracing, and walls), and the weight of permanently attached major equipment, tanks, machinery, cranes, elevators, etc. The deadweight of equipment is based on its bounding operating condition including the weight of fluids. In addition, permanently attached non-structural elements such as siding, partitions, and insulation are included. Dead loads of cranes and elevators do not include the rated capacity lift or impact.

3.8.4.3.1.2 Equivalent Dead Load (Uniform)

Equivalent dead load includes the weight of minor equipment not specifically included in the dead load defined in Subsection 3.8.4.3 and the weight of piping, cables and cable trays, ducts, and their supports. It also includes fluid contained within the piping and minor equipment under operating conditions. Floors are checked for the actual equipment loads. To account for permanently attached small equipment, piping, ductwork and cable trays, a minimum equivalent dead load of 50 lb/ft^2 is applied. Where piping, ductwork, or cable trays are supported from platforms or walkway beams, actual loads may be determined and used in lieu of a conservative loading.

For floors with a significant number of small pieces of equipment (e.g., electrical cabinet rooms), the equivalent dead load is determined by dividing the total equipment weight by the floor area that effectively supports the equipment within the room, plus an additional 50 lb/ft^2.

3.8.4.3.2 Liquid Loads (F)

The vertical and lateral pressures of liquids are treated as dead loads except for external pressures due to ground water which are treated as live loads. The effects of buoyancy and flooding on SSCs are considered, where applicable. Structures supporting fluid loads during normal operation and accident conditions are designed for the hydrostatic as well as hydrodynamic loads. Hydrodynamic loads due to seismic sloshing are calculated per ASCE Standard 4-98 (Reference 3.8-34), and included in earthquake load E_s. For the purposes of evaluating flotation in Subsection 3.8.5.3, F_b is the buoyant force of the design-basis flood or high ground water table, whichever is greater.

3.8.4.3.3 Earth Pressure (H)

A static earth pressure acting on the structures during normal operation, considered as fully saturated to account for ground and flood water levels, is included in the analysis as *H*. The dynamic soil pressure, induced during an SSE event, is considered as an earthquake load E_{ss}.

3.8.4.3.4 Live Loads (L)

Live load is the load imposed by the use and occupancy of the building/structure. Live loads include floor area loads, laydown loads, fuel transfer casks, equipment handling loads, trucks, railroad vehicles, and similar items. The floor area live load need not be applied on areas occupied by equipment whose weight is specifically included in the dead load. Live load is applicable on floors under equipment where access is provided; for instance, the floor under an elevated tank supported on legs.

The following live load items are considered in design.

3.8.4.3.4.1 Building Floor Loads

Floor live loads account for heavily loaded areas for component laydown, such as the fuel cask loading dock and the containment refueling floor. The design live loads reflect the temporary location of major pieces of equipment, their safe load path during movement/relocation, and their foot-print loads or equivalent uniformly distributed loads.

In addition, the following minimum values for live loads are used in load combinations involving non-seismic loads. Live loads for the seismic analysis are defined in Subsection 3.8.4.3.

Containment operating deck	950 lb/ft^2 (during maintenance and refueling outages) 200 lb/ft^2 (during normal operation)
Offices	50 lb/ft^2
Assembly and locker rooms	100 lb/ft^2
Laboratories and laundry Rooms	100 lb/ft^2
Stairs and walkways	100 lb/ft^2 (or a moving concentrated load of 1,000 pounds)
Structural platforms & gratings	100 lb/ft^2 (However, grating areas of concrete floors are designed for the same live load as the adjacent concrete floor)
Maintenance and service platforms	Load is calculated for individual locations based on the functional requirements and service equipment

All other floors (ground floor and elevated floors)	200 lb/ft^2

In design reconciliation analysis if actual loads are established to be lower than the above loads, the actual loads may be used for reconciliation. Floor live loads for design are not reduced below 100 lb/ft^2, except for offices which are maintained as 50 lb/ft^2 minimum.

3.8.4.3.4.2 Roof Snow Loads

The roof is designed for uniform snow live load as specified in Chapter 2. The snow load is not additive with other roof live loads, except as noted in Subsection 3.8.4.3 below. Roof snow loads are calculated in accordance with ASCE 7-05 (Reference 3.8-35), accounting for snow drift where appropriate. The importance factor is taken as 1.2 for category I and II SSCs (essential facilities). Roof snow load is considered as live load for seismic analysis, as defined in Subsection 3.8.4.3.

3.8.4.3.4.3 Roof Rain Loads

Roof rain load is accounted for in accordance with Chapter 8 of ASCE 7-05 (Reference 3.8-35), and applied as applicable in load combinations. Roof rain load is included in live load in applicable load combinations, including additive effects with roof snow load as identified in Section 7.10 of ASCE 7-05. Subsection 3.4.1.2 provides additional discussion of design features to limit ponding of rain on the roofs of plant buildings.

3.8.4.3.4.4 Concentrated Loads for the Design of Local Members

Concentrated load on beams and girders (in load combinations that do not include seismic load)	5,000 lbs to be applied as to maximize moment or shear. This load is not carried to columns. It is not applied in office or access control areas [(1)]
Concentrated load on slabs (to be considered with dead load only)	5,000 lbs to be so applied as to maximize moment or shear. This load is not cumulative and is not carried to columns. It is not applied in office or access control areas [(1)]

[(1)] Area where no heavy equipment is located or transported.

In the design reconciliation analysis, if actual loads are established to be lower than the above loads, the actual loads may be used for reconciliation.

3.8.4.3.4.5 Temporary Exterior Wall Surcharge

When applicable, the most critical of either a minimum subsurface wall surcharge of 250 lb/ft^2 (wheel load converted to equivalent uniform vertical load) or a railroad surcharge is applied.

3.8.4.3.4.6 Construction Loads

In the load combination for the construction case, the live load is defined as the additional construction loads produced by cranes, trucks, or any type of vehicle with its pick-up load, as required by construction. ASCE 37-02 (Reference 3.8-36) provides additional guidance. For steel beams supporting concrete floors, the weight of the concrete plus 100 lb/ft^2 uniform load or 5,000 pounds concentrated load, distributed near points of maximum shear and moment, are applied. A one third increase in allowable stress is permitted in this case.

Metal decking and precast concrete panels used as formwork for concrete floors are designed for the wet weight of the concrete plus a construction live load of 20 lb/ft^2 uniform or 150 pound concentrated. The deflection for these items used as a form is limited to the lesser of 0.75 in. or the span length (in inches) divided by 180. For relatively high construction loads, temporary supports may be used to prop floor beams without increasing their size.

3.8.4.3.4.7 Crane Loads

Crane and equipment supplier's information are used to determine wheel loads, equipment loads, weights of moving parts, and reactions of clamps (if any). Construction loads are considered where applicable.

Impact allowance for traveling crane supports and runway horizontal forces are in accordance with AISC N690 (Reference 3.8-9) for seismic category I and II structures, unless the crane manufacturer's design specifies higher impact loads. The vertical live load is increased by 25% to account for vertical impact of cab-operated traveling cranes and 10% of pendant-operated traveling cranes. A lateral force, equal to 20% of the lifted load and crane trolley are applied at the top and perpendicular to the crane rails. A longitudinal force equal to 10% of the maximum wheel load is applied at the top of the rails.

Crane lift loads are not combined with wind loads. During construction; however, wind effects on the crane are considered. For load combinations, including SSE, all cranes in seismic category I areas are considered with a "most probable lift load" or heaviest load to be lifted over seismic category I SSCs/fuel, whichever is greater. Impact and seismic forces are not applied simultaneously.

3.8.4.3.4.8 Elevator Loads

Impact allowance for supports of elevators is 100%, applied to design capacity and weight of car plus appurtenances, or as specified by the equipment supplier.

3.8.4.3.4.9 Equipment Laydown and Major Maintenance

Floors are designed for planned refueling and maintenance activities as defined on equipment laydown drawings. Plans are developed for major equipment removal (such as SGs) and laydown. Temporary supports can be included in these plans provided such supports are easy to install and the installation of such supports is described in the plans.

3.8.4.3.5 Wind Load

3.8.4.3.5.1 Design Wind (W)

The design wind is determined as discussed in Subsection 3.3.1 for values specified in Chapter 2. Wind loads are not combined with seismic loads.

3.8.4.3.5.2 Tornado Load (Wt)

The design for tornado loads is in accordance with Subsection 3.3.2 for values specified in Chapter 2. In addition, extreme winds such as hurricanes and tornadoes have the potential to generate missiles. Missiles generated by tornadoes and extreme winds are listed in Subsection 3.5.1.4 and barrier design for missiles is discussed in Subsection 3.5.3. These subsections describe the determination of tornado loads applicable to the protection of safety-related equipment.

3.8.4.3.6 Seismic Loads

3.8.4.3.6.1 Operating Basis (E_{ob})

For seismic category I SSCs whose design is site-specific, that is, not included in the seismic design of the US-APWR standard plant, OBE loading has to be considered only if the value of site-specific OBE is set higher than 1/3 of the site-specific SSE. Therefore, the site-specific seismic design does not have to consider OBE loads if the OBE spectra are enveloped by 1/3 of the site-specific foundation input response spectra and ground motion response spectra.

3.8.4.3.6.2 Safe Shutdown (E_{ss})

E_{ss} is defined as the loads generated by the SSE specified for the plant, including the associated hydrodynamic loads and dynamic incremental soil pressure (based on three-dimensional SSI analysis results). Earthquake loads (E_{ss}), are derived for evaluation of seismic category I structures using ground motion accelerations in accordance with Section 3.7.

Seismic dynamic analyses of the buildings consider the dead load and the equivalent dead loads as the accelerated mass. In addition to the dead load, 25% of the floor live load during normal operation or 75% of the roof snow load, whichever is applicable, is also considered as accelerated mass in the seismic models.

For the local design of members loaded individually, such as the floors and beams, seismic member forces include the vertical response due to masses equal to 50% of the specified floor live loads or roof snow load, whichever is applicable. These seismic loads are combined with 100% of the specified live loads, or 75% of the roof snow load, whichever is applicable, as shown below.

$$1.0\,D + (1.0\,L \text{ or } 0.75\,S) + a_v\,(D + 0.5\,(L \text{ or } S))$$

where

a_v = Vertical seismic acceleration

D = Dead load, including the equivalent dead load

L = Floor live load per Subsection 3.8.4.3

S = Roof snow load as per Subsection 3.8.4.3

For the seismic load combination, the containment operating deck is designed for a live load of 200 lb/ft^2 which is appropriate for plant operating conditions, and 25% of this live load is included as mass in the seismic analyses. The mass of equipment and distributed system are included in both the dead and seismic loads.

3.8.4.3.7 Normal Operating Loads

3.8.4.3.7.1 Operating Thermal Loads (T_o)

The normal operating environment inside and outside the R/B is specified in Table 3.8.4-1. Temperature Gradients of the PS/Bs are provided in Table 3.8.4-2 and Figure 3.8.4-1. Normal thermal loads for the exterior walls and roofs are caused by positive and negative temperature variations through the concrete wall. The temperature in the concrete is based on one-dimensional steady state heat transfer analysis, which considers the surface heat transfer between the environment and the concrete. All exterior walls of the R/B are designed for these thermal loads, even if the exterior surface is protected by an adjacent building. The thermal gradient is also applied to the portion of the R/B between the PCCV upper annulus and the auxiliary building (A/B).

The COL Applicant is to specify normal operating thermal loads for site-specific structures, as applicable.

3.8.4.3.7.2 Operating Pipe Reactions (R_o)

Pipe and equipment reactions during normal operation or shutdown conditions are based on the most critical transient or steady state condition.

3.8.4.3.8 Effects of Pipe Rupture (Y) and other Accidents (P_a, T_a, R_a)

3.8.4.3.8.1 Accident Pressure Load (P_a)

Accident pressure loads are considered within or across a compartment and/or building due to a differential pressure generated by postulated pipe rupture. Dynamic effects due to pressure time-history are also included in the design.

3.8.4.3.8.2 Accident Thermal Loads (T_a)

Thermal loads due to temperature gradients caused by the postulated pipe breaks are considered in the design. The temperature gradients are calculated using the temperatures, corresponding to LOCA and MSLB, or a spent fuel pit accident, and are presented in Table 3.8.1-3. Local areas are designed for the elevated temperature effects and the loads resulting from the postulated accidents.

3.8.4.3.8.3 Accident Thermal Pipe Reaction (R_a)

Pipe and equipment reactions under thermal conditions are generated by the postulated pipe break, including (R_o).

3.8.4.3.8.4 Reaction Due to Pipe Ruptures (Y_r)

The load on a structure generated by the reaction of a ruptured high-energy pipe during the postulated event is included using an appropriate dynamic load factor. The time dependent nature of the load and the ability of the structure to deform beyond yield are considered in establishing the structural capacity necessary to resist the effects of (Y_r).

3.8.4.3.8.5 Jet Impingement (Y_j)

Load on structure generated by the jet impingement from a ruptured high-energy pipe during the postulated event is included using an appropriate dynamic load factor. The time-dependent nature of the load and the ability of the structure to deform beyond yield are considered in establishing the structural capacity necessary to resist the effects of Y_j. The dynamic load factor is calculated using a long duration step function for the load. The target resistance is idealized as bilinear elasto-perfectly plastic.

The structural evaluation considers a double-ended break and a longitudinal break (equal to the pipe cross-sectional area) for calculating the jet impingement load from the main steam and feedwater lines. This evaluation is applicable to the floor at elevation 65 ft, 0 in. of the Main Steam Isolation Valve (MSIV) subcompartment in the R/B break exclusion zone. The design pressure for LOCA and MSLB is considered for 100% power operation.

3.8.4.3.8.6 Impact of Ruptured Pipe (Y_m)

The load resulting from the impact of a ruptured high-energy pipe on a structure or a pipe restraint during the postulated event includes an appropriate dynamic load factor. The type of impact (i.e., plastic, elastic), together with the ability of the structure to deform beyond yield are considered in establishing the structural capacity necessary to resist the impact.

3.8.4.3.9 Load Combinations

Concrete structures are designed in accordance with ACI-349 (Reference 3.8-8) and the provisions of RG 1.142 (Reference 3.8-19) where applicable, with the load combinations and load factors provided in Table 3.8.4-3.

Steel structures are designed using the allowable strength design method in accordance with AISC N690 (Reference 3.8-9) for the load combinations and allowable strength factors provided in Table 3.8.4-4.

3.8.4.4 Design and Analysis Procedures

The following discussion describes the design and analysis procedures used for seismic category I structures in accordance with ACI-349 (Reference 3.8-8), with supplement guidance by RG 1.142 (Reference 3.8-19) for concrete structures, and AISC N690 (Reference 3.8-9) for steel structures. This subsection also discusses items such as general assumptions on boundary conditions, expected behavior under loads, methods by which loads and forces are transmitted to supports and ultimately the structure foundation, and computer programs used. Table 3.8.4-5 summarizes the modeling and analytical methods of R/B and PS/Bs.

A Design Report prepared in accordance with guidance from Appendix C to SRP 3.8.4 provides design and construction information more specific than contained within this DCD. The Design Report information quantitatively represents the actual design computations and the final design results. In addition, the Design Report provides criteria for reconciliation between design and as-built conditions.

3.8.4.4.1 R/B

The R/B includes the MCR and the fuel storage area, and is a reinforced concrete structure consisting of vertical shear/bearing walls and horizontal slabs. The walls carry the vertical loads from the structure to the basemat. Lateral loads are transferred to the walls by the roof and floor slabs.

The fuel handling area is a reinforced concrete structure supported by structural steel framing. The new fuel is stored in racks in a dry, unlined pit. The spent fuel pit is lined with stainless steel and is normally flooded to an elevation 1 ft, 2 in. below the operating floor deck. Subsection 9.1.2 describes the design bases and layout of the fuel storage area.

The design and analysis procedures for the R/B, other than the PCCV and containment internal structure, including assumptions on boundary conditions and expected behavior under loads, are in accordance with ACI-349 (Reference 3.8-8) for concrete structures, with AISC N690 (Reference 3.8-9) for steel structures, and with American Iron and Steel Institute (AISI) specification for cold formed steel structures (Reference 3.8-38).

The design considers normal loads (including construction, dead, live, and thermal), and the SSE. Seismic forces are obtained from the dynamic analysis of the three-dimensional lumped-mass stick model described in Subsection 3.7.2. These loads are applied to the linear elastic FE model fixed at elevation 3 ft, 7 in. as equivalent static forces. Loads and load combinations are given in Subsection 3.8.4.3.

The design of the R/B's flexible shear walls and floor slabs, like that of the main steam piping room with many openings, takes into account the out-of-plane bending and shear loads, such as live load, dead load, and seismic load. Also, the walls and slabs of the spent fuel pit and the emergency feedwater pit are designed to resist the out-of-plane bending and shear loads, such as live load, dead load, seismic, hydrostatic, and hydrodynamic pressure.

The R/B is analyzed using a three-dimensional FE model with the NASTRAN computer codes (Reference 3.8-13). The FE model is shown in Figure 3.8.4-2.

The basemat design is described in Subsection 3.8.5.

3.8.4.4.1.1 Structural Design of Critical Sections

This subsection summarizes the structural design of representative seismic category I structural elements in the R/B. These structural elements are listed below and the corresponding location numbers are shown on Figure 3.8.4-3.

SECTION 1 West exterior wall of R/B, elevation 3 ft, 7 in. to elevation 101 ft, 0 in. This exterior wall illustrates typical loads such as temperature gradients, seismic, and tornado missile.

SECTION 2 South interior wall of R/B, elevation 3 ft, 7 in. to elevation 101 ft, 0 in. This is one of the most highly stressed shear walls.

SECTION 3 The north exterior wall of spent fuel pit, elevation 30 ft, 1 in. to elevation 76 ft, 5 in. and the slab of spent fuel pit at elevation 30 ft, 1 in. The wall is subjected to temperature gradients, hydrostatic and hydrodynamic loads.

AREA 3 The slab of spent fuel pit at elevation 30 ft, 1 in. The slab is subjected to temperature gradients, hydrostatic and hydrodynamic loads.

SECTION 4 South exterior wall of R/B, elevation 3 ft, 7 in. to elevation 115 ft, 6 in. This exterior wall is subjected to typical loads such as temperature gradients, seismic, hydrodynamic pressure, and tornado missile.

AREA 4 The slab of emergency feedwater pit at elevation 76 ft, 5 in. The slab is a unique area encompassing the water storage pit.

3.8.4.4.1.2 Shear Walls

Structural Description

Shear walls in the R/B vary in thickness, configuration, aspect ratio, and amount of reinforcement. The stress levels in shear walls depend on these parameters and the seismic acceleration level. The walls are monolithically cast with the concrete floor slabs. The in-plane behavior of these shear walls, including the large openings, is adequately represented in the analytical models for the global seismic response. The shear walls are used as the primary system for resisting lateral loads, such as earthquakes.

Design Approach

The R/B shear walls are designed to withstand the loads specified in Subsection 3.8.4.3. Dead, live, thermal, and other normal operating condition loads are considered in the shear wall design.

West Exterior Wall

The west exterior reinforced concrete wall extends from the top of the basemat area at elevation 3 ft, 7 in. to the roof at elevation 101 ft, 0 in. The wall segments are typically 28 in. to 40 in. thick. The wall is designed for the applicable loads including dead load, live load, seismic loads, thermal loads, and tornado missile load. As shown in Figure 3.8.4-4, the wall is divided in 4 segments for design purposes. Table 3.8.4-6 presents the typical details of the reinforcement for each SECTION 1 wall zone. Figure 3.8.4-4 shows the typical reinforcement for the west exterior wall at SECTION 1.

South Interior Wall

The south interior reinforced concrete wall extends from the top of the basemat area at elevation 3 ft, 7 in. to the roof at elevation 101 ft, 0 in. The wall segments are typically 40 in. to 44 in. thick. The wall is designed for the applicable loads including dead load, live load, seismic loads, and thermal loads. As shown in Figure 3.8.4-5, the wall is divided in

5 segments for design purposes. Table 3.8.4-7 presents the typical details of the reinforcement for each SECTION 2 wall zone. Figure 3.8.4-5 shows the typical reinforcement for the west exterior wall at SECTION 2.

North Exterior Wall of Spent Fuel Pit

The north exterior reinforced concrete wall of the spent fuel pit extends from elevation 30 ft, 1 in. to the roof at elevation 76 ft, 5 in. The wall segments are typically 93 in. to 152 in. thick. The wall is designed for the applicable loads including dead load, live load, hydrostatic and hydrodynamic loads, seismic loads, spent fuel rack reaction loads, and thermal loads. As shown in Figure 3.8.4-6, the wall is divided in 3 segments for design purposes. Table 3.8.4-8 presents the typical details of the reinforcement for each SECTION 3 wall zone. Figure 3.8.4-6 shows the typical reinforcement for the west exterior wall at SECTION 3.

South Exterior Wall

The south exterior reinforced concrete wall extends from the top of the basemat area at elevation 3 ft, 7 in. to the roof at elevation 115 ft, 6 in. The wall segments are typically 40 in. to 44 in. thick. The wall is designed for the applicable loads including dead load, live load, hydrostatic and hydrodynamic loads (for Emergency Feedwater Pit wall), seismic loads, thermal loads, and tornado missile load. As shown in Figure 3.8.4-7, the wall is divided in 5 segments for design purposes. Table 3.8.4-9 presents the typical details of the reinforcement for each SECTION 4 wall zone. Figure 3.8.4-7 shows the typical reinforcement for the west exterior wall at Section 4.

3.8.4.4.1.3 Floor and Roof

Design Approach

The concrete slab and the steel reinforcement of the composite section are evaluated for normal and extreme environmental conditions. The slab concrete and the reinforcement are designed to meet the requirements of the ACI 349 Code (Reference 3.8-8). The slab design considers the in-plane and out-of-plane seismic forces. The global in-plane and out-of-plane forces are obtained from the equivalent static analysis of the three-dimensional FE model of the R/B.

Spent Fuel Pit Slab at Elevation 30 ft, 1 in., AREA 3

This concrete slab is designed for the applicable loads including dead load, live load, hydrostatic and hydrodynamic loads, seismic loads, spent fuel rack reaction loads, and thermal loads. The concrete slab is 126 in. thick. Table 3.8.4-10 presents the typical details of the reinforcement for AREA 3. Figure 3.8.4-8 shows the typical reinforcement at AREA 3.

Emergency Feedwater Pit Slab at Elevation 76 ft, 5 in., AREA 4

This concrete slab is designed for the applicable loads including dead load, live load, hydrostatic and hydrodynamic loads, seismic loads, and thermal loads. The concrete slab is 52 in. thick. Table 3.8.4-11 presents the typical details of the reinforcement for AREA 4. Figure 3.8.4-9 shows the typical reinforcement at AREA 4.

3.8.4.4.2 East and West PS/Bs

The east and west PS/Bs provide two emergency power sources, and are reinforced concrete structures consisting of vertical shear/bearing walls and horizontal slabs. The walls carry the vertical loads from the structure to the basemat. Lateral loads are transferred to the walls by the roof and floor slabs.

The design and analysis procedures for the PS/Bs, as described above for the R/B above including assumptions on boundary conditions and expected behavior under loads, are in accordance with ACI-349 (Reference 3.8-7) for concrete structures, with AISC N690 (Reference 3.8-8) for steel structures, and AISI specification for cold formed steel structures Reference 3.8-38).

The design considers normal loads including construction, dead, live, thermal, and the SSE. Seismic forces are obtained from the dynamic analysis of the three-dimensional lumped-mass stick model described in Subsection 3.7.2. Loads and load combinations are provided in Subsection 3.8.4.3.

The PS/Bs are analyzed using a three-dimensional FE model with the NASTRAN computer codes (Reference 3.8-13). The FE model is shown in Figure 3.8.4-10. The basemat design is described in Subsection 3.8.5.

3.8.4.4.2.1 Structural Design of Critical Sections

This subsection summarizes the structural design of representative seismic category I structural elements in the PS/Bs. These structural elements listed below are for the west PS/B, which is the worst case configuration and contains the most critical sections. Locations within the west PS/B are shown with corresponding sections and area on Figure 3.8.4-11 and Figure 3.8.4-12.

SECTION 1 South exterior wall of west PS/B, elevation -26 ft, 4 in. to elevation 39 ft, 6 in. This exterior wall illustrates typical loads such as temperature gradients, seismic, and tornado missile.

SECTION 2 Typical interior wall of PS/Bs, elevation -26 ft, 4 in. to elevation 3 ft, 7 in. This is one of the most highly stressed shear walls.

AREA 1 The slab of PS/B at elevation 3 ft, 7 in. The slab is subjected to live loads and temperature gradients.

3.8.4.4.2.2 Shear Walls

Structural Description

All exterior walls are shear walls, however internal shear walls exist only in the north-south axis. The stress levels in shear walls depend on thickness, configuration, aspect ratio, amount of reinforcement and the seismic acceleration level. The walls are monolithically cast with the concrete floor slabs. The in-plane behavior of these shear walls, including the large openings, is adequately represented in the analytical models for the global seismic response. The shear walls are used as the primary system for resisting the lateral loads, such as earthquakes.

Design Approach

The PS/B shear walls are designed to withstand the loads specified in Subsection 3.8.4.3. Dead, live, thermal, and other normal operating condition loads are considered in the shear wall design.

South Exterior Wall

The south exterior reinforced concrete wall extends from the top of the basemat area at elevation -26 ft, 4 in. to the roof at elevation 39 ft, 6 in. The walls are typically 21 in. above elevation 3 ft, 7 in. and 32 in. below elevation 3 ft, 7 in. The wall is designed for the applicable loads including dead load, live load, seismic loads, thermal loads, and tornado missile load. As shown in Figure 3.8.4-13, the wall is divided in 4 segments each design purposes. Table 3.8.4-12 presents the typical details of the reinforcement for the SECTION 1 wall zone. Figure 3.8.4-13 shows the typical reinforcement of the south exterior wall at SECTION 1.

Typical Interior Wall

The typical interior reinforced concrete wall extends from the top of the basemat area at elevation -26 ft, 4 in. to the slab at elevation 3 ft, 7 in. The walls are 20 in. thick. The wall is designed for the applicable loads including dead load, live load, seismic loads, and thermal loads. Table 3.8.4-13 presents the typical details of the reinforcement for SECTION 2 wall zone 1, which is applicable for all interior walls. Figure 3.8.4-14 shows the typical reinforcement for the interior wall at SECTION 2.

3.8.4.4.2.3 Floor

Design Approach

The concrete slab and the steel reinforcement of the composite section are evaluated for normal and extreme environmental conditions. The slab concrete and the reinforcement are designed to meet the requirements of American Concrete Institute standard ACI 349 (Reference 3.8-8). The slab design considers the in-plane and out-of-plane seismic forces. The global in-plane and out-of-plane forces are obtained from the equivalent static analysis of the worst case three-dimensional FE model of the PS/B.

Slab at Elevation 3 ft, 7 in., AREA 1

The concrete slab is designed for the applicable loads including dead load, live load, seismic loads, and thermal loads. The concrete slab is 32 in. thick. Table 3.8.4-14 presents the typical details of the reinforcement for AREA 1. Figure 3.8.4-15 shows the typical reinforcement at AREA 1, which is applicable for the entire floor slab area in the PS/Bs

3.8.4.4.3 Other Seismic Category I Structures

The design and analysis procedures for other seismic category I concrete structures are in accordance with ACI-349 (Reference 3.8-8). The design and analysis procedures for seismic category I steel structures are in accordance with AISC N690 (Reference 3.8-9).

Seismic category I structures are modeled globally using applicable loads, including equivalent dead and live loads, in load combinations that include design-basis earthquake accelerations as described in Section 3.7. Computer modeling utilizes three-dimensional FE models to globally analyze the beams, columns, slabs, and shear walls. Individual structural members are further analyzed for localized loading as described in specific load cases.

Concrete components such as walls, slabs, and foundations are evaluated for the effects of frame interaction when the flexural moment from seismic loads is a large percentage of the flexural capacity. When at least two-thirds of the flexural capacity of a component is from seismic loads alone, the component is designed as a frame to assure design capacity even under a seismic margin earthquake equal to 150% of the SSE, in accordance with RG 1.142 (Reference 3.8-19), Regulatory Position 3.

Members that are subject to torsion and combined shear and torsion are evaluated to the standards of Section 11.6 of ACI 318-99 (Reference 3.8-32) instead of the requirements of Section 11.6 of ACI 349 (Reference 3.8-8), as recommended by RG 1.142 (Reference 3.8-19).

Design and analysis of the spent fuel pit, the spent fuel racks, and the fuel handling system is in accordance with Appendix D of NUREG-0800, SRP 3.8.4 (Reference 3.8-40). Additional general information is provided by ANSI/ANS-57.7 (Reference 3.8-33). Subsection 9.1.2 describes the design bases and layout of the spent fuel pit, the spent fuel racks, and the fuel handling system.

Exterior concrete walls below grade and basemat of seismic category I structures are designed using load combinations accounting for sub-grade loads including static and dynamic lateral earth pressure, soil surcharges, and effects of maximum water table. Lateral earth pressure is calculated in accordance with ASCE 4-98 (Reference 3.8-34) for both active and passive earth pressures.

Structural steel framing in seismic category I structures is primarily for the support of distribution systems, access platforms, and other plant appurtenances. Steel members are sized and detailed based on maximum stresses and reactions determined through conservative manual calculations and computer models based on pinned-end connections, including slotted hole clip angle connections, to relieve thermal expansion forces where appropriate, unless detailed to develop end moments in accordance with AISC N690 (Reference 3.8-9). The design of the support anchorage to the concrete structure is in accordance with ACI 349 Appendix B (Reference 3.8-8), RG 1.142 (Reference 3.8-19), and RG 1.199 (Reference 3.8-41).

The design and analysis procedures for seismic category I distribution systems, such as HVAC ducts, conduits, and cable trays including their respective seismic category I supports, are in accordance with AISC N690 (Reference 3.8-8) and AISI Specification for Design of Cold-Formed Steel Members (Reference 3.8-34). The following appendices provide additional discussion of the design and analysis of these subsystems.

- Appendix 3A Heating, Ventilation, and Air Conditioning Ducts and Duct Supports

- Appendix 3F Design of Conduits and Conduit Supports
- Appendix 3G Seismic Qualification of Cable Trays and Supports

The COL Applicant is to provide design and analysis procedures for the ESWPT, UHSRS, and PSFSVs.

3.8.4.4.4 Seismic Category II Structures

Seismic category II structures need not remain functional during and after an SSE. However, such structures must not fall or displace to the point they could damage seismic category I SSCs.

Seismic Category II structures and subsystems are analyzed and designed using the same methods and stress limits specified for seismic Category I structures and subsystems, except structural steel in-plane stress limits are permitted to reach 1.0 F_y.

3.8.4.5 Structural Acceptance Criteria

Structural acceptance criteria are listed in Table 3.8.4-3 for concrete structures and in Table 3.8.4-4 for steel structures, and are in accordance with ACI-349 (Reference 3.8-8) and AISC N690 (Reference 3.8-9), except as provided in the table notes.

The deflection of the structural members is limited to the maximum values as specified in ACI-349 (Reference 3.8-8) and AISC N690 (Reference 3.8-9), as applicable.

Subsection 3.8.5.5 identifies acceptance criteria applicable to additional basemat load combinations.

3.8.4.6 Materials, Quality Control, and Special Construction Techniques

The following information pertains to the materials, quality control programs, and any special construction techniques utilized in the construction of the seismic category I structures for the US-APWR.

3.8.4.6.1 Materials

The major materials of construction in seismic category I structures are concrete, grout, steel reinforcement bars, splices of steel reinforcing bars, structural steel shapes, and anchors.

3.8.4.6.1.1 Concrete

Concrete utilized in standard plant seismic category I structures, other than PCCV, has a compressive strength of f'_c = 4,000 psi. The COL Applicant is to specify concrete strength utilized in non-standard plant seismic category I structures. A test age of 28 days is used for normal concrete. Batching and placement of concrete is performed in accordance with ACI 349 (Reference 3.8-8), ACI 304R (Reference 3.8-38), and ASTM C 94 (Reference 3.8-42).

Portland cement is used in the concrete conforms to ASTM C 150, Type II (Reference 3.8-43) standards. The confirmation of the chemical composition of the

cement properties is validated by certified copies of test reports showing the chemical composition of each Portland cement shipment.

Aggregates used in the concrete conform to ASTM C 33 (Reference 3.8-44). Aggregate and source acceptance is based on documented test results for each source and random sampling of shipments based on MIL-STD-1916 (Reference 3.8-45).

Water and ice used in the concrete conform to the requirements of ACI-349 (Reference 3.8-8).

Admixtures include an air entraining admixture, pozzolans, and a water reducing admixture. The admixtures, except the pozzolans, are stored in a liquid state.

Admixtures and concrete mix conform to the following requirements:

Pozzolans	ASTM C 618
Sampling and Testing of Pozzolans	ASTM C 311
Air Entraining Admixtures	ASTM C 260
Water Reducing Admixtures	ASTM C 494
Concrete Mix	ACI 211.1 and ASTM C 94 (Reference 3.8-45)
Concrete Mix Testing	ASTM C 172, ASTM C 192, and ASTM C 39
Minimum Number of Strength Tests(1)	ACI 349 (Reference 3.8-7) and ASME NQA-2 (Reference 3.8-37)

Note 1: In lieu of frequency of compressive strength testing specified by Section 5.6.1.1 of ACI 349-97 (Reference 3.8-8) or that specified by ASME NQA-2 (Reference 3.8-37), the following is acceptable per RG 1.142, Regulatory Position 5 (Reference 3.8-19).

Samples for strength tests of concrete should be taken at least once per day for each class of concrete placed or at least once for each 100 cubic yards of concrete placed. When the standard deviation for 30 consecutive tests of a given class is less than 600 psi, the amount of concrete placed between tests may be increased by 50 cubic yards for each 100 psi the standard deviation is below 600 psi, except that the minimum testing rate should not be less than one test for each shift when the concrete is placed on more than one shift per day or not less than one test for each 200 cubic yards of concrete placed. The test frequency should revert to once for each 100 cubic yards placed if the data for any 30 consecutive tests indicate a higher standard deviation than the value controlling the decreased test frequency.

3.8.4.6.1.2 Grout

Grout is used to transfer load from machinery, equipment, and column bases to their foundations, and to anchor the reinforcing bars, dowels, and anchor rods into hardened concrete. Grout generally consists of Portland cement, sand, water, and admixtures. Epoxy grout is only used in areas where radiation levels and temperature levels are compatible with epoxy use.

Portland cement used in the concrete conforms to ASTM C 150, Type II (Reference 3.8-43). Sand must be clean with gradation and fineness in accordance with ASTM C33 (Reference 3.8-44). Water and ice used in the grout conforms to the requirements of ACI 349 (Reference 3.8-8). Water-reducing and/or retarding admixtures conform to ASTM C494.

3.8.4.6.1.3 Steel for Concrete Reinforcement

Steel bars for concrete reinforcement are deformed bars conforming to ASTM A 6l5, Grade 60, or ASTM A 706, Grade 60 (minimum yield strength of 60,000 psi). For each heat (batch) of reinforcing steel bars, certified mill test reports are provided. Additionally, for each 50 tons/bar size/heat, a minimum of one tensile test is performed. Where mechanical anchorage can not be achieved through the use of deformed bars, headed steel bars conforming to ASTM A 970 are used.

Coated reinforcing steel is not used. Placement of concrete reinforcement is in accordance with ACI-349, Section 7.7 (Reference 3.8-8).

3.8.4.6.1.4 Splices

Reinforcement splices comply with ACI-349, Chapter 12 (Reference 3.8-8). All bars are sheared or cut to the correct length shown on the bar bending schedules from continuous rolled bar stock. In general, all splices are made with a wire-tied lap of length in accordance with ACI 408R. Mechanical splices used are in conformance with ACI 493.3R. Mechanical splices develop 125% of the specified yield strength of the spliced bar. Welding of reinforcing steel, other than in the PCCV, is performed in accordance with American Welding Society (AWS) D1.4 (Reference 3.8-46).

3.8.4.6.1.5 Structural Steel Shapes

Structural steel shapes used in other seismic category I structures conform to the following standards:

Standard	Description
ASTM A 1	Carbon Steel Rails
ASTM A 3	Standard Specification for Steel Joint Bars, Low, Medium, and High Carbon (Non-Heat Treated)
ASTM A 36	Rolled Shapes, Plates, and Bars

Standard	Description
ASTM A 49	Standard Specification for Heat Treated Carbon Steel Joint Bars Microalloyed Joint Bars, and Forged Carbon Steel Compromise Joint Bars
ASTM A 53	Standard Specification for Pipe, Steel, Black and Hot-Dipped, Zinc-Coated, Welded and Seamless
ASTM A 90	Standard Test Method for Weight (Mass) of Coating on Iron or Steel Articles with Zinc or Zinc-Alloy Coatings
ASTM A 108	Standard Specification for Steel Bars, Carbon, Cold-Finished, Standard Quality
ASTM A 123	Standard Specification for Zinc (Hot-Dip Galvanized) Coatings on Iron and Steel Products
ASTM A 143	Standard Practice for Safeguarding Against Embrittlement of Hot-Dip Galvanized Structural Steel Products and Procedure for Detecting Embrittlement
ASTM A 153	Standard Specification for Zinc Coating (Hot-Dip) on Iron and Steel Hardware
ASTM A 240	Nitronic 33 Stainless Steel (designation S2400, Type XM-29)
ASTM A 307	Standard Specification for Carbon Steel Bolts and Studs, 60,000 psi Tensile Strength
ASTM A 325	Standard Specification for Structural Bolts, Steel, Heat Treated, 120/105 ksi Minimum Tensile strength
ASTM A 354	Quenched and Tempered Alloy Steel Bolts (Grade BC)
ASTM A 449	Standard Specification for Quenched and Tempered Steel Bolts and Studs
ASTM A 490	Standard Specification for Heat-Treated Steel Structural Bolts, 150 ksi Minimum Tensile Strength
ASTM A 500	Standard Specification for Cold-Formed Welded and Seamless Carbon Steel Structural Tubing in Rounds and Shapes
ASTM A 501	Standard Specification for Hot-Formed Welded and Seamless Carbon Steel Structural Tubing
ASTM A 563	Standard Specification for Carbon and Alloy Steel Nuts

Standard	Description
ASTM A 572	Standard Specification for High-Strength Low-Alloy Columbium-Vanadium Structural Steel
ASTM A 588	Standard Specification for High-Strength Low-Alloy Structural Steel with 50 ksi Minimum Yield Point to 4-in thick
ASTM A 615	Deformed and Plain Billet Steel Bars for Concrete Reinforcement
ASTM A 653	Standard Specification for Steel Sheet, Zinc-Coated (Galvanized) or Zinc-Iron Alloy-Coated (Galvannealed) by the Hot-Dip Process
ASTM A 668	Standard Specification for Steel Forgings, Carbon and Alloy, for General Industrial Use
ASTM A 706	Low Alloy Steel Deformed Bars for Concrete Reinforcement
ASTM A 759	Standard Specification for Carbon Steel Crane Rails
ASTM A 786	Standard Specification for Rolled Steel Floor Plate
ASTM A 924	Standard Specification for General Requirements for Steel Sheet, Metallic-Coated by the Hot-Dip Process
ASTM A 970	Specifications for Welded Headed Bars for Concrete Reinforcement
ASTM A 992	Standard Specification for Structural Steel Shapes
ASTM A 1011	Standard Specification for Steel, Sheet and Strip, Hot-Rolled, Carbon, Structural, High-Strength Low-Alloy and High-Strength Low-Alloy with Improved Formability
ASTM F 436	Standard Specification for Hardened Steel Washers
ASTM F 959	Standard Specification for Compressible-Washer-Type Direct Tension Indicators for Use with Structural Fasteners
ASTM F 1554	Steel anchor bolts, 36, 55, and 105-ksi Yield Strength
ASTM F 1852	Standard Specification for “Twist Off” Type Tension Control Structural Bolt/Nut/Washer Assemblies, Steel, Heat Treated, 120/105 ksi Minimum Tensile Strength

3.8.4.6.1.6 Anchors

Anchoring components and structural supports in concrete conform to following industry standards, RG 1.142 (Reference 3.8-19), and RG 1.199 (Reference 3.8-41). Expansion anchor bolts, where used, are as supplied by the manufacturer in accordance with their specifications.

ASTM A 193	Standard Specification for Alloy-Steel and Stainless Steel Bolting Materials for High Temperature or High Pressure Service and Other Special Purpose Applications
ASTM A 194	Standard Specification for Carbon and Alloy Steel Nuts for Bolts for High Pressure or High Temperature Service
ASTM A 307	Standard Specification for Carbon Steel Bolts and Studs, 60,000 psi Tensile Strength
ASTM A 325	Standard Specification for Structural Bolts, Steel, Heat Treated, 120/105 ksi Minimum Tensile Strength-Standard
ASTM A 354	Standard Specification for Quenched and Tempered Alloy Steel Bolts, Studs, and Other Externally Threaded Fasteners
ASTM A 449	Standard Specification for Hex Cap Screws, Bolts and Studs, Steel, Heat Treated, 120/105/90 ksi Minimum Tensile Strength
ASTM A 453	Standard Specification for High-Temperature Bolting Materials, with Expansion Coefficients Comparable to Austenitic Stainless Steels
ASTM A 490	Standard Specification for Structural Bolts, Alloy Steel, Heat Treated, 150 ksi Minimum Tensile Strength-Standard
ASTM A 540	Standard Specification for Alloy-Steel Bolting Materials for Special Applications
ASTM A 615	“Deformed and Plain Billet Steel Bars for Concrete Reinforcement
ASTM A 706	Low Alloy Steel Deformed Bars for Concrete Reinforcement
ASTM A 970	Specifications for Welded Headed Bars for Concrete Reinforcement
ASTM F 1554	Steel anchor bolts, 36, 55, and 105-ksi Yield Strength

3.8.4.6.1.7 Masonry Walls

There are no safety-related reinforced masonry walls in seismic category I structures. A non safety-related masonry wall exists in the spray pump room located at the lowest level of the R/B, which is not subjected to pressure loads and is restrained against seismic accelerations to preclude damage to safety-related SSCs.

3.8.4.6.2 Quality Control

Chapter 17 details the quality assurance program for the US-APWR.

3.8.4.6.3 Special Construction Techniques

There are no special construction techniques utilized in the construction of other seismic category I structures.

3.8.4.7 Testing and Inservice Inspection Requirements

The COL Applicant is to address monitoring of seismic category I structures in accordance with the requirements of NUMARC 93-01 (Reference 3.8-28) and 10 CFR 50.65 (Reference 3.8-29) as detailed in RG 1.160 (Reference 3.8-30).

For water control structures, ISI programs are acceptable if in accordance with RG 1.127 (Reference 3.8-47). Water control structures covered by this program include concrete structures, embankment structures, spillway structures, outlet works, reservoirs, cooling water channels, canals and intake and discharge structures, and safety and performance instrumentation.

For seismic category I structures, it is important to accommodate ISI of critical areas. Monitoring and maintaining the condition of other seismic category I structures are essential for plant safety. Any special design provisions (e.g., providing sufficient physical access, providing alternative means for identification of conditions in inaccessible areas that can lead to degradation, remote visual monitoring of high-radiation areas) to accommodate ISI of other seismic category I structures are to be provided on a case-by-case basis.

For plants with nonaggressive ground water/soil (i.e., pH greater than 5.5, chlorides less than 500 ppm, and sulfates less than 1,500 ppm), an acceptable program for normally inaccessible, below-grade concrete walls and foundations is to (1) examine the exposed portions of the below-grade concrete, when excavated for any reason, for signs of degradation; and (2) conduct periodic site monitoring of ground water chemistry, to confirm that the ground water remains nonaggressive.

For plants with aggressive ground water/soil (i.e., it exceeds any of the limits noted above), an acceptable approach is to implement a periodic surveillance program to monitor the condition of normally inaccessible, below-grade concrete for signs of degradation.

3.8.4.7.1 Construction Inspection

Inspections relating to the construction of seismic category I and II SSCs are conducted in accordance with the codes applicable to the construction activities and/or materials. In addition, weld acceptance is performed in accordance with the NCIG, Visual Weld Acceptance Criteria for Structural Welding at Nuclear Power Plants, NCIG-01, Revision 2 (Reference 3.8-31).

3.8.5 Foundations

3.8.5.1 Description of the Foundations

Each building is isolated on a separate concrete basemat as identified in Subsection 3.8.4. The PCCV and the containment internal structure are integral with the R/B on a common basemat. Adjoining building basemats, such as the east and west PS/Bs, A/B, and T/B, are structurally separated by a 4 in. gap at and below the grade. This requirement does not apply to engineered mat fill concrete that is designed to be part of the foundation subgrade.

Basemats are located at a depth below the zone of maximum frost penetration, taken as 4 ft below grade. The COL Applicant is to determine if the site-specific zone of maximum frost penetration extends below the depth of the basemats for the standard plant, and to pour lean concrete under any basemat above the frost line so that the bottom of lean concrete is below the maximum frost penetration level.

3.8.5.1.1 Reactor Building and Enveloped Structures

The R/B, with the PCCV and containment internal structure at its center, is built on a common basemat and isolated from the adjacent A/B, east and west PS/Bs, and T/B. The basemat of the R/B is a rectangular reinforced concrete mat and is composed of two parts. One part of the basemat is for the PCCV and containment internal structure, and the other part is for the remaining seismic category I basemat for the R/B. The length of the basemat in the north-south direction is 309 ft, 0 in., and in the east-west direction is 210 ft, 0 in. The central region, with a diameter of approximately 188 ft, 0 in., supports the PCCV and containment internal structure with a thickness varying from 11 ft, 7 in. to 38 ft, 2 in. The peripheral portion which supports the R/B is 9 ft, 11 in. thick.

The basemat includes hollow portions such as the tendon gallery, tendon gallery access tunnel, and other portions such as in-core chase and CV recirculation sump. Since the vertical tendons are anchored at the roof of the tendon gallery, the upper part of the tendon gallery is important from the structural point of view.

The basemat reinforcement consists of a top horizontal layer of reinforcement, a bottom horizontal layer of reinforcement, and vertical shear reinforcement. The bottom layer of reinforcement is arranged in a rectangular grid. The top layer of reinforcement is arranged in a rectangular grid at the center of the mat and radiates outward in a polar pattern in order to avoid interference with PCCV reinforcement. The top and bottom reinforcement at the upper portion of the tendon gallery is in a polar pattern.

Outlines of the R/B, PCCV and containment internal structure including the basemat are provided in Figures 3.8.5-1 through 3.8.5-3.

3.8.5.1.2 Power Source Buildings

The east and west PS/Bs are free-standing structures, each on an independent reinforced concrete basemat. Each PS/B basemat is a rectangular reinforced concrete mat with a thickness of 100 in. The bottom of basemat is at elevation -34 ft, 8 in.

The bottom layer of basemat reinforcement is arranged in a rectangular grid. The basemat also consists of a top layer of reinforcement, and vertical shear reinforcement.

3.8.5.1.3 Site Specific Structures

Other non-standard seismic category I plant buildings and structures of the US-APWR are designed by the COL Applicant based on site-specific subgrade conditions.

3.8.5.2 Applicable Codes, Standards and Specifications

The following industry codes, standards and specifications are applicable for the design, construction, materials, testing and inspections of the PCCV basemat. Pressure retention requirements of the vessel are in accordance with the guidance from SRP 3.8.1. (Reference 3.8-7).

- Rules for Construction of Nuclear Facility Components, Division 2, Concrete Containments, Section III, American Society of Mechanical Engineers, 2001 Edition through the 2003 Addenda (hereafter referred to as ASME Code). (Reference 3.8-2).

  Note: Articles CC-1000 through CC-6000 of Section III, Division 2 are acceptable for the scope, material, design, construction, examination, and testing of concrete containments of nuclear power plants subject to the regulatory positions provided by RG 1.136 (Reference 3.8-3).

The following industry standards are applicable for the design and construction of seismic category I basemats not required as a pressure retention boundary. Other codes, standards and specifications applicable to materials, testing and inspections are provided in Subsections 3.8.4.6 and 3.8.4.7.

- ACI 349-01, Code Requirements for Nuclear Safety-Related Concrete Structures, American Concrete Institute, 2001 (Reference 3.8-8)
- RG 1.142, Rev. 2, Safety-Related Concrete Structures for Nuclear Power Plants (Other Than Reactor Vessels and Containments), U.S. Nuclear Regulatory Commission, Washington, DC, November 2001. (Reference 3.8-19)
- ASCE 4-98, Seismic Analysis of Safety-Related Nuclear Structures and Commentary, American Society of Civil Engineers, 1998 (Reference 3.8-34)

3.8.5.3 Loads and Load Combinations

Loads and load combinations are discussed in detail in Subsections 3.8.1.3 and 3.8.4.3. The containment design pressure P_d of 68 psi is included as an accident pressure in these load cases. Other load combinations applicable to the design of the basemat include acceptance criteria for overturning, sliding, and flotation as detailed in Table 3.8.5-1. The non-ASME portion of the basemat is designed in accordance with ACI-349 (Reference 3.8-8) and the provisions of RG 1.142 (Reference 3.8-19), where applicable. The reinforced concrete basemat for the PCCV and enveloped containment internal structure are designed in accordance with ASME Code Section III, Division 2,

Subsection CC (Reference 3.8-2). Figure 3.8.5-4 delineates basemat regions applicable to each Code.

3.8.5.4 Design and Analysis Procedures

Based on the premise that seismic category I buildings basemats are not supported on bedrock, a computer analysis of the SSI is performed for static and dynamic loads. Subsection 3.7.2 provides further information. Two types of SSI analyses are required for the R/B and the PS/Bs: an overall seismic analysis of the building for the superstructure design, and a local analysis of the basemat for its design. For the basemat design, the basemat is modeled using solid finite elements with springs representing the subgrade.

The seismic category I structures are concrete, shear-wall structures consisting of vertical shear/bearing walls and horizontal floor slabs designed to SSE accelerations as discussed in Section 3.7. The walls carry the vertical loads from the structure to the basemat. Lateral loads are transferred to the walls by the roof and floor slabs. The walls then transmit the loads to the basemat. The walls also provide stiffness to the basemat and distribute the loads between them.

The reinforced concrete basemat for the PCCV and enveloped containment internal structure are designed in accordance with ASME Code Section III, Division 2, Subsection CC (Reference 3.8-2). Other seismic category I basemats of reinforced concrete are designed in accordance with ACI-349 (Reference 3.8-8) and the provisions of RG 1.142 (Reference 3.8-19) where applicable. Table 3.8.5-2 identifies the material properties of concrete and Figure 3.8.5-4 delineates the governing codes based on region of the R/B, PCCV and containment internal structure basemat.

3.8.5.4.1 Properties of Subgrade

For purposes of the US-APWR standard design, the SSI effects are captured by considering three generic subgrade types utilizing frequency independent springs. A fourth subgrade condition is also considered, that of a foundation resting on hard rock. For the fourth condition, it is not necessary to consider SSI effects because the foundation is considered to be resting on a fixed base that is rigid. Subsection 3.7.2.4 provides further discussion relating to SSI and the selection of subgrade types.

The four supporting media (subgrade) conditions for the US-APWR design are provided in Table 3.8.5-3.

The subgrade shear modulus is considered constant for the above subgrade conditions with shear wave velocities of 3,500 fps or higher. The constant subgrade shear modulus assumption is justified because the strains in subgrade materials with these shear velocities are very low. For the generic subgrade having a shear wave velocity of 1,000 ft/s, the shear modulus is reduced in accordance with Subsection 3.7.2.4 to account for changes in shear modulus due to relatively large strains.

An average subgrade bearing capacity of 15,000 psf is utilized for static load cases, while an average dynamic soil bearing capacity of 95,000 psf is used for Normal plus SSE loads.

The foundation depth-to-equivalent-radius ratio for the R/B-PCCV basemat is less than 0.3, which indicates a shallow embedment foundation for purposes of SSI as defined in ASCE 4-98, Subsection 3.3.4.2 (Reference 3.8-34). Embedment effects on the R/B and PCCV SSI analysis are neglected in the US-APWR standard plant design in obtaining the soil impedance functions. Therefore, conservatively, the R/B-PCCV seismic models are not coupled with any subgrade or backfill material at the sides of the basemat or along the faces of below-grade exterior walls, and no credit is taken in the seismic analysis for restraint due to the presence of these materials. Subsequently, there are no explicit requirements for shear wave velocity or other material characteristics requirements for the subgrade and/or backfill materials present on the sides of the basemat and R/B below-grade exterior walls. Subsection 3.7.2.4 provides additional discussion on the SSI analysis.

3.8.5.4.2 Analyses for Loads during Operation

The major seismic category I structures basemat analyses use 3-dimensional NASTRAN FE models of the major seismic category I structures, which are described in Subsection 3.7.2.3. Soil springs are assigned in the model to determine the interaction of the basemat with the overlying structures and with the subgrade. The model is capable of determining the possibility of uplift of the basemat from the subgrade during postulated SSE events. The vertical spring at each node in the analytical model act in compression only. The horizontal springs are active when the vertical spring is in compression and inactive when the vertical spring lifts off. Horizontal bearing reactions on the side walls below grade are conservatively neglected for the analysis of the basemat. However, horizontal forces are considered in the analysis of the wall.

The three-dimensional FE model of the basemat includes the structures above the basemat and their effect on the distribution of loads on the basemat. The combined global FE model of the R/B, PCCV, and containment internal structure, including basemat, is presented on Figures 3.8.5-5 through 3.8.5-10.

The analysis considers normal and extreme environmental loads and containment pressure loads. The normal loads include dead loads and live loads. Extreme environmental loads include the SSE.

Dead loads are applied as inertia loads. Live loads and the SSE loads are applied as concentrated loads on the nodes. The SSE loads are applied as equivalent static loads using the assumption that while the maximum response from one direction occurs, the responses from the other two directions are 40% of the maximum. Combinations of the three directions of the SSE are considered.

Linear analyses are performed for all specified load combinations assuming that the soil springs can not take tension. The results of the linear cases are then used to select critical load cases for non-linear analyses. The results from these analyses include the forces, shears, and moments in the basemat; the bearing pressures under the basemat; and the area of the basemat that is uplifted. Minimum area of steel reinforcement is calculated from the section forces for the most critical load combinations.

The required reinforcement steel for the portion of the basemat under the R/B (other than PCCV) is determined by considering the reinforcement envelope for the full non-linear iteration of the most critical load combinations.

3.8.5.4.2.1 Global Three-Dimensional FE Modeling of Basemat

The stress conditions of the basemat are generated by numerous types of loads from the superstructure. The modeling of the basemat therefore involves evaluating the interaction between the basemat and the superstructures to determine the stress conditions at the interface. The global FE model is analyzed utilizing the FE computer program NASTRAN (Reference 3.8-13).

Regarding the R/B, the element division in a horizontal direction inside the secondary shield walls of containment internal structure is made in a rectangular grid and that outside the secondary shield wall is made in a polar pattern. Peripheral areas of the basemat are divided in a rectangular grid.

The upper portion of tendon gallery is considered with concentrated stresses created by the connection with the PCCV. This region is divided into four elements in the radial direction to better evaluate the stresses.

The basemat below the PCCV and the lower portion of containment internal structure are simulated with hexahedral solid elements. The elements below the PCCV are divided into three to fifteen parts in thickness, and elements in peripheral areas are divided into three parts. The FE modeling of the PS/Bs is provided in Subsection 3.8.4.4.

3.8.5.4.3 Boundary Conditions of Basemat

The basemat subgrade is represented by springs. The spring constants for rotations and translations are determined based on the soil parameters. Springs are attached to the bottom of the basemat, and the constraints by side soil are not considered in the model. The values of the springs used in the analysis are shown below. The spring values are multiplied by the basemat nodal point tributary areas to compute the spring constants assigned to the nodal points.

3.8.5.4.4 Analyses of Settlement

The potential for foundation subsidence, or differential displacement, is designed for a maximum 2 in. based on enveloping properties of subsurface materials. This is a conservative allowance that may not be applicable at all plant sites. Subsidence and differential displacement may therefore be reduced to less than 2 in. if justified by the COL Applicant based on site-specific soil properties.

Soil conditions for which settlement during construction is considered are identified in Chapter 2, Subsection 2.5.4. To evaluate the potential for settlement, soil conditions applicable to the US-APWR are considered to determine the enveloping design cases. Based on this assessment, soft soil sites with alternating sand and clay layers maximizes early stage settlement and impact of dewatering, while soft soil sites with clay maximize settlement in the long term. In any situation, conditions outside the boundaries of acceptable soils are removed and replaced using compatible structural fill. Consideration of settlement during construction, therefore, apply only to sites with alternating sand and clay soil layers.

The basemat FE model is analyzed for various phases of construction, including the determination of displacement. The design is completed in accordance with ASME Section III, Division 2 (Reference 3.8-2) and ACI 349 (Reference 3.8-8) using applicable construction load combinations and factors provided in Table 3.8.4-3. Based on these analyses, the basemat is detailed and constructed to minimize any potential differential settlement during construction.

Early stages of basemat construction are most vulnerable to differential loading and deformations. The construction of the basemat is anticipated to be a continuous concrete placement. The differential settlement is susceptible immediately following the concrete placement when the ratio of the slab depth to length is very small. Measures to prevent settlement are implemented by dewatering the excavation pit and maintaining it dry during basemat placement, curing, and construction of exterior walls. Subsequent to the placement of the concrete foundation, walls, and containment internal structure, the basemat is significantly stiffened, minimizing any further tendency to differential settlement.

In the event of suspended or sequenced construction, the basemat may remain unstiffened by the lack of shear walls for extended periods. Differential stresses in the basemat are also possible based on construction sequence, such as tension maximized on the top of the basemat due to the placement of foundation walls along the edge without additional mass and shear walls in the center of the basemat. The design of the basemat is sufficiently reinforced to control both compressive and tensile stresses until such time as the concrete placement of basemat walls and containment internal structure are completed. Therefore, the potential for differential settlement is controlled during alternative construction scenarios, until the basemat is stiffened by transverse shear walls.

3.8.5.4.5 Verification of Critical Sections

The basemat is designed to meet the acceptance criteria presented in Subsection 3.8.5.5. For the R/B, Table 3.8.5-4 provides sectional thickness and reinforcement ratio of basemat used in the evaluation. Table 3.8.5-5 provides sectional thickness and reinforcement ratio of basemat used in the PS/B evaluation. Figures 3.8.5-11 and 3.8.5-12 show the R/B-PCCV-containment internal structure basemat reinforcement arrangement of SECTION N-S and SECTION E-W, respectively. The basemat reinforcement arrangement of the PS/Bs is detailed on Figure 3.8.5-13. The orientation of the PS/B SECTION N-S and SECTION E-W are reflected on Figure 3.8.4-11.

3.8.5.4.6 Design Report

A Design Report prepared in accordance with guidance from Appendix C to SRP 3.8.4 provides design and construction information more specific than that contained within this DCD. The Design Report information quantitatively presents the actual design computations and the final design results. In addition, the Design Report provides criteria for reconciliation between design and as-built conditions.

3.8.5.5 Structural Acceptance Criteria

Structural acceptance criteria are discussed in detail in Subsections 3.8.1.5 and 3.8.4.5. The design soil conditions are as provided in Section 2.5, and the site-specific COL is to assure the design criteria listed in Chapter 2, Table 2.0-1 is met or exceeded.

Other load combinations applicable to the design of each seismic category I structure basemat include acceptance criteria for overturning, sliding, and flotation as detailed in Table 3.8.5-1. The factor of safety to each design load combination is calculated as indicated below, and compared to the minimum factors to assure stability of the building basemats.

3.8.5.5.1 Overturning Acceptance Criteria

The factor of safety against overturning is identified as the ratio of the moment resisting overturning (M_r) divided by the overturning moment (M_o). For SSE load cases, M_o is the maximum moment from the time history analyses of the applicable structure's lumped mass stick model in accordance with Section 3.7. Therefore,

FS_o = [M_r / M_o] , not less than FS_{ot} as determined from Table 3.8.5-1.

where

FS_o = Structure factor of safety against overturning by the maximum design basis wind, tornado, or earthquake load.

M_r = Resisting moment determined as the dead load of the structure, minus the buoyant force created by the design ground water table, multiplied by the distance from the structure edge to the structure center of gravity provided there is no overstress at the structure's edge.

M_o = Overturning moment caused by the maximum design basis wind, tornado, or earthquake load.

3.8.5.5.2 Sliding Acceptance Criteria

The factor of safety against sliding caused by wind or tornado is identified by the ratio:

FS_{sw} = [F_s + F_p] / F_h , not less than FS_{sl} as determined from Table 3.8.5-1,

where

FS_{sw} = Structure factor of safety against sliding caused by wind or tornado

F_s = Shear (or sliding) resistance along bottom of structure basemat

F_p = Resistance due to maximum passive soil pressure, neglecting any contribution of surcharge

F_h = Lateral force due to active soil pressure, including surcharge, and tornado or wind load, as applicable

The factor of safety against sliding caused by earthquake is identified by the ratio:

FS_{se} = [F_s + F_p] / [F_d + F_h], not less than FS_{sl} as determined from Table 3.8.5-1

where

FS_{se} = Structure factor of safety against sliding caused by earthquake

F_s = Shear (or sliding) resistance along bottom of structure basemat

F_p = Resistance due to maximum passive soil pressure, neglecting any contribution of surcharge

F_d = Dynamic lateral force, including dynamic active earth pressures caused by seismic loads

F_h = Lateral force due to all loads except seismic loads

3.8.5.5.3 Flotation Acceptance Criteria

The factor of safety against flotation is identified as the ratio of the total dead load of the structure including foundation (D_r) divided by the buoyant force (F_b). Therefore,

FS_f = D_r / F_b , not less than FS_{fl} as determined from Table 3.8.5-1.

where

FS_f = Structure factor of safety against flotation by the maximum design basis flood or ground water table.

D_r = Total dead load of the structure including foundation.

F_b = Buoyant force caused by the design basis flood or high ground water table, whichever is greater.

3.8.5.6 Materials, Quality Control, and Special Construction Techniques

Subsection 3.8.4.6 describes the materials, quality control, and special construction techniques applicable to seismic category I foundations, including water control structures and below-grade concrete walls and foundations. Subsection 3.8.1.6 provides testing and surveillance requirements relating to the PCCV basemat.

3.8.5.7 Testing and Inservice Inspection Requirements

Subsection 3.8.4.7 identifies the testing and inservice surveillances applicable to seismic category I basemats, including water control structures and below-grade concrete walls and basemats. Subsection 3.8.1.7 also identifies testing and surveillance requirements relating to the PCCV basemat.

3.8.5.7.1 Construction Inspection

Inspection relating to the construction of seismic category I structures is in accordance with the codes applicable to the construction activities and/or materials. Subsection 3.8.4.7 contains a discussion of construction inspection requirements.

3.8.6 Combined License Information

COL 3.8(1) *It is the responsibility of the COL Applicant to perform reconciliation evaluations when the as-built properties become available*.

COL 3.8(2) *It is the responsibility of the COL Applicant to assure that wobble and curvature coefficients used in computing prestressing losses due to friction are consistent with the tendon system corrosion protection coatings present at the time of prestressing.*

COL 3.8(3) *It is the responsibility of the COL Applicant to assure that any material changes based on site-specific material selection for construction of the PCCV meet the requirements specified in ASME Code, Section III, Article CC-2000 of the code and supplementary requirements of RG 1.136 as well as SRP 3.8.1.*

COL 3.8(4) *It is the responsibility of the COL Applicant to select the site-specific concrete ingredients and to develop a concrete mix design that produces the concrete design strengths specified for the US-APWR PCCV and conform to all applicable material and quality control requirements.*

COL 3.8(5) *It is the responsibility of the COL Applicant to verify these concrete creep and shrinkage parameters by testing of the site-specific concrete mix, and the PCCV design analysis is revised if the final test results affect the conclusions of the PCCV calculation.*

COL 3.8(6) *It is the responsibility of the COL Applicant to develop a site-specific specification that covers the concrete production and batch plant requirements.*

COL 3.8(7) *It is the responsibility of the COL Applicant to determine the site-specific aggressivity of the ground water/soil and accommodate this parameter into the concrete mix design as well as into the site-specific structural surveillance program.*

COL 3.8(8) *It is the responsibility of the COL Applicant to produce a site-specific liner plate specification to define the material and welding requirements, testing, and quality requirements.*

COL 3.8(9) *The COL Applicant is to produce another site-specific specification for the PCCV personnel airlocks and equipment hatch.*

COL 3.8(10) *The prestressing system is designed as a strand system, however the system material may be switched to a wire system at the choice of the COL Applicant. If this is done, the COL Applicant is to adjust the US-APWR standard plant tendon system design and details on a site-specific basis.*

COL 3.8(11) *Deleted*

COL 3.8(12) *It is the responsibility of the COL Applicant to produce a site-specific specification that covers the material requirements for the Prestressing System.*

COL 3.8(13) *It is the responsibility of the COL Applicant to produce a site-specific specification to define the material and special material testing requirements for the reinforcing steel system including bars and splices, and all material is to conform to Article CC-2300 of the ASME Code, Section III.*

COL 3.8(14) *It is the responsibility of the COL Applicant to establish a site-specific program for testing and ISI of the PCCV, including periodic inservice surveillance and inspection of the PCCV liner and prestressing tendons in accordance with ASME Code Section XI, Subsection IWL.*

COL 3.8(15) *The COL Applicant is responsible for the seismic design of those seismic category I and seismic category II SSCs not part of the US-APWR standard plant, including the following non-standard seismic category I structures designed to the site-specific SSE:*

- *ESWPT*
- *UHSRS*
- *PSFSVs*

COL 3.8(16) *Deleted*

COL 3.8(17) *Deleted*

COL 3.8(18) *Deleted*

COL 3.8(19) *The design and analysis of the ESWPT, UHSRS, PSFSVs, and other site-specific structures are to be provided by the COL Applicant based on site-specific seismic criteria.*

COL 3.8(20) *The COL Applicant is to identify any applicable externally generated loads. Such site-specific loads include those induced by floods, potential non-terrorism related aircraft crashes, explosive hazards in proximity to the site, and projectiles and missiles generated from activities of nearby military installations.*

COL 3.8(21) *Deleted*

COL 3.8(22) *The COL Applicant is to address monitoring of seismic category I structures in accordance with the requirements of NUMARC 93-01 (Reference 3.8-28) and 10 CFR 50.65 (Reference 3.8-29) as detailed in RG 1.160 (Reference 3.8-30).*

COL 3.8(23) *The COL Applicant is to determine if the site-specific zone of maximum frost penetration extends below the depth of the basemats for the standard plant, and to pour lean concrete under any basemat above the frost line so that the bottom of lean concrete is below the maximum frost penetration level.*

COL 3.8(24) *Other non-standard seismic category I buildings and structures of the US-APWR are designed by the COL Applicant based on site-specific subgrade conditions.*

COL 3.8(25) *The site-specific COL are to assure the design criteria listed in Chapter 2, Table 2.0-1, is met or exceeded.*

COL 3.8(26) *Subsidence and differential displacement may therefore be reduced to less than 2 in. if justified by the COL Applicant based on site specific soil properties.*

COL 3.8(27) *The COL Applicant is to specify normal operating thermal loads for site-specific structures, as applicable.*

COL 3.8(28) *The COL Applicant is to specify concrete strength utilized in non-standard plant seismic category I structures.*

COL 3.8(29) *The COL Applicant is to provide design and analysis procedures for the ESWPT, UHSRS, and PSFSVs.*

3.8.7 References

3.8-1 Combined License Applications for Nuclear Power Plants, RG 1.206, Rev. 0, U.S. Nuclear Regulatory Commission, Washington, DC, June 2007.

3.8-2 Rules for Construction of Nuclear Facility Components, Division 2, Concrete Containments. Section III, American Society of Mechanical Engineers, 2001 Edition through the 2003 Addenda (hereafter referred to as ASME Code).

3.8-3 Design Limits, Loading Combinations, Materials, Construction, and Testing of Concrete Containments. RG 1.136, U.S. Nuclear Regulatory Commission, Washington, DC, Revision 3, March 2007.

3.8-4 Rules for Inservice Inspection of Nuclear Power Plant Components. Section XI, American Society of Mechanical Engineers, 2001 Edition through the 2003 Addenda.

3.8-5 Inservice Inspection of Ungrouted Tendons in Pre-stressed Concrete Containments. RG 1.35, U.S. Nuclear Regulatory Commission, Washington, DC, Revision 3, July 1990.

3.8-6 Determining Pre-stressing Forces for Inspection of Pre-stressed Concrete Containments. RG 1.35.1 U.S. Nuclear Regulatory Commission, Washington, DC, July 1990.

3.8-7 Concrete Containment, Design of Structures, Components, Equipment, and Systems, Standard Review Plan for the Review of Safety Analysis Reports for Nuclear Power Plants. NUREG-0800 SRP 3.8.1, U.S. Nuclear Regulatory Commission, Washington, DC, March 2007.

3.8-8 Code Requirements for Nuclear Safety-Related Concrete Structures. ACI 349-01, American Concrete Institute, 2001.

3.8-9 Specification for the Design, Fabrication and Erection of Steel Safety-Related Structures for Nuclear Facilities, ANSI/AISC N690-1994 including Supplement 2 (2004), American National Standards Institute/American Institute of Steel Construction, 1994 & 2004.

3.8-10 Combustible Gas Control for Nuclear Power Reactors, Domestic Licensing of Production and Utilization Facilities, Energy. Title 10 Code of Federal Regulations Part 50.44, U.S. Nuclear Regulatory Commission, Washington, DC, January 1, 2007.

3.8-11 Control of Combustible Gas Concentrations in Containment, Regulatory Guide 1.7, Rev. 3, U.S. Nuclear Regulatory Commission, Washington, DC, March 2007.

3.8-12 Policy, Technical, and Licensing Issues Pertaining to Evolutionary and Advanced Light-Water Reactor (ALWR) Designs. SECY-93-087, U.S. Nuclear Regulatory Commission, Washington, DC, April 2, 1993.

3.8-13 NASTRAN, Femap with NX NASTRAN, Version 9.3.

3.8-14 ANSYS, Advanced Analysis Techniques Guide, Release 11.0, ANSYS, Inc., 2007.

3.8-15 Johnson, T.E. Testing of Large Pre-stressing Tendon End Anchor Anchorage Regions. International Conference on Experience in the Design, Construction and Operation of Pre-stressed Concrete Pressure Vessels and Containments for Nuclear Reactors, University of York, England, 8-12 September 1975.

3.8-16 Containment Integrity Research at Sandia National Laboratories, An Overview, NUREG/CR-6906 (SAND2006-2274P), Sandia National Laboratories, U.S. Nuclear Regulatory Commission, Washington, DC 20555-0001, July 2006.

3.8-17 Containment Building Liner Plate Design Report, BC-TOP-1, Revision 1, December 1972, Bechtel Corporation, San Francisco, California.

3.8-18 Primary Reactor Containment Leakage Testing for Water-Cooled Power Reactors, Domestic Licensing of Production and Utilization Facilities, Energy.

Title 10 Code of Federal Regulations Part 50, Appendix J, U.S. Nuclear Regulatory Commission, Washington, DC.

3.8-19 Safety-Related Concrete Structures for Nuclear Power Plants (Other Than Reactor Vessels and Containments), Regulatory Guide 1.142, Rev.2, U.S. Nuclear Regulatory Commission, Washington, DC, November 2001.

3.8-20 Concrete Radiation Shields for Nuclear Power Plants. Regulatory Guide 1.69, U.S. Nuclear Regulatory Commission, Washington, DC, December 1973.

3.8-21 Tsuda, K., Nakayama, T., Eto, H., Akiyama, K., Shimizu, A., Tanouchi, K., Aoyama, H., Experimental Study on Steel Plate Reinforced Concrete Shear Walls with Joint Bars, 16th International Conference on Structural Mechanics in Reactor Technology, 2001.

3.8-22 Akiyama, H., Sekimoto, H., Fukihara, M., Nakanashi, K., and Hara, K. A Compression and Shear Loading Test of Concrete Filled Steel Bearing Wall. 11th International Conference on Structural Mechanics in Reactor Technology, 1991.

3.8-23 Ohno, F., Shioya, T., Nagasawa, Y., Matsumoto, G., Okada, T., and Ota, T. Experimental Studies on Composite Members for Arctic Offshore Structures, Steel/Concrete Composite Structural Systems, C-FER Publication No. 1, Proceedings of a special symposium held in conjunction with POAC ‘87, Fairbanks, Alaska, 9th International Conference on Port and Ocean Engineering under Arctic Conditions, 1987.

3.8-24 Matsuishi, M. and Iwata, S. Strength of Composite System Ice-Resisting Structures, Steel/Concrete Composite Structural Systems. C-FER Publication No. 1, Proceedings of a special symposium held in conjunction with POAC ‘87, Fairbanks, Alaska, 9th International Conference on Port and Ocean Engineering under Arctic Conditions, 1987.

3.8-25 Adams, P. F. and Zimmerman, T. J. E. Design and Behaviour of Composite Ice-Resisting Walls, Steel/Concrete Composite Structural Systems. C-FER Publication No. 1, Proceedings of a special symposium held in conjunction with POAC '87, Fairbanks, Alaska, 9th International Conference on Port and Ocean Engineering under Arctic Conditions, 1987.

3.8-26 O'Flynn, B. and MacGregor, J. G. Tests on Composite Ice-Resisting Walls, Steel/Concrete Composite Structural Systems, C-FER Publication No. 1, Proceedings of a special symposium held in conjunction with POAC '87, Fairbanks, Alaska, 9th International Conference on Port and Ocean Engineering under Arctic Conditions, 1987.

3.8-27 Akiyama, H., Sekimoto, H., Tanaka, M., Inoue, K., Fukihara, M., and Okuda, Y. 1/10th Scale Model Test of Inner Concrete Structure Composed of Concrete Filled Steel Bearing Wall. 10th International Conference on Structural Mechanics in Reactor Technology, 1989.

3.8-28 Industry Guideline for Monitoring the Effectiveness of Maintenance at Nuclear Power Plants. NUMARC 93-01, Rev.2, Nuclear Energy Institute, April 1996.

3.8-29 Requirements for Monitoring the Effectiveness of Maintenance at Nuclear Power Plants, Domestic Licensing of Production and Utilization Facilities, Energy. Title 10 Code of Federal Regulations Part 50.65, U.S. Nuclear Regulatory Commission, Washington, DC, January 1, 2007.

3.8-30 Monitoring the Effectiveness of Maintenance at Nuclear Power Plants, RG 1.160, Rev.2, U.S. Nuclear Regulatory Commission, Washington, DC, March 1997.

3.8-31 Visual Weld Acceptance Criteria: Volume 1, Visual Weld Acceptance Criteria for Structural Welding at Nuclear Power Plants, NCIG-01, Rev.3, Nuclear Construction Issues Group/Electric Power Research Institute, July 28, 1999.

3.8-32 Building Code Requirements for Structural Concrete, ACI 318-99, American Concrete Institute, 1999.

3.8-33 Design Criteria for an Independent Spent Fuel Storage Installation (Water Pool Type), ANSI/ANS-57.7, American National Standards Institute/American Nuclear Society, 1997.

3.8-34 Seismic Analysis of Safety Related Nuclear Structures and Commentary on Seismic Analysis of Safety Related Nuclear Structures, ASCE Standard 4-98, American Society of Civil Engineers, 1998.

3.8-35 Minimum Design Loads for Buildings and Other Structures. ASCE 7-05, American Society of Civil Engineers, 2005.

3.8-36 Design Loads on Structures During Construction. ASCE 37-02, American Society of Civil Engineers, 2002.

3.8-37 Quality Assurance Requirements for Nuclear Power Plants. ASME NQA-2-1983, with ASME NQA-2a-1985 addenda to ASME NQA-2-1983, American Society of Mechanical Engineers, 1983.

3.8-38 Specification for the Design of Cold-Formed Steel Members. 1996 Edition and Supplement No 1, American Iron and Steel Institute, July 30, 1999.

3.8-39 Guide for Measuring, Mixing, Transporting, and Placing Concrete. ACI-304R, American Concrete Institute, 2000.

3.8-40 Other Seismic Category I Structures, Standard Review Plan for the Review of Safety Analysis Reports for Nuclear Power Plants. NUREG-0800 SRP Section 3.8.4, Rev.2, U.S. Nuclear Regulatory Commission, Washington, DC, March, 2007.

3.8-41 Anchoring Components and Structural Supports in Concrete, RG 1.199, Rev. 0, U.S. Nuclear Regulatory Commission, November 2003.

3.8-42 Standard Specification for Ready-Mixed Concrete, C94-07, American Standards Testing and Materials (ASTM), 2007.

3.8-43 Standard Specification for Portland Cement, C150-07, Type II, American Society of Testing and Materials.

3.8-44 Standard Specification for Concrete Aggregates, C33-03, ASTM, 2003.

3.8-45 DOD Preferred Methods for Acceptance of Product, MIL-STD-1916, Department of Defense Test Method Standard, April 1, 1996.

3.8-46 Structural Welding Code – Reinforcing Steel, D1.4, American Welding Society, 2005.

3.8-47 Inspection of Water-Control Structures Associated with Nuclear Power Plants, RG 1.127, Rev. 1, U.S. Nuclear Regulatory Commission, March 1978.

Table 3.8.1-1 US-APWR PCCV Basic Design Specification

	US-APWR	Remarks
Design Condition		
Design Pressure (P_d)	68 psig	
Test Pressure (P_t)	78.2 psig	
Design External Pressure (P)	-3.9 psig	
Design Accident Temperature	300°F	
Dimension		
Inner Diameter	149 ft - 2 in.	
Inner Height	226 ft - 5 in.	
Wall Thickness (Cylinder)	4 ft - 4 in.	
Wall Thickness (Dome)	3 ft - 8 in.	
Liner Thickness	0.25 in.	
Large Opening		
Equipment Hatch	ID 27 ft - 11 in.	One Set
Personnel Air Lock	ID 8 ft - 6 3/8 in.	Two Sets
Free Volume	2.80×10^6 ft^3	
Design Leakage Rate	0.1% mass/24 hours	
Design Life	60 years	
Material		
Concrete Design Strength	7000 psi	PCCV
	4000 psi	Basemat & Modules
Reinforcement	ASTM A615 Gr. 60 or ASTM A706 Gr. 60	
Liner Plate	ASTM A516 Gr. 60	
Tendon Specification		
PS System	VSL (or BBR)	
Tendon Capacity	13 MN Class	
Strands	ASTM A416 Grade 1860 #15 (Lower Relaxation)	
Number of Strands per Tendon	49	
Number of Cylinder Hoop Tendons	94	1 ft – 6 in. Pitch
Number of Cyl. Dome Tendons	18	2.5° Radial Pitch
Number of Inverted U-shape Tendons	90	2° Radial Pitch

Table 3.8.1-2 PCCV Load Combinations and Load Factors

Category	D	$L^{(1)}$	F	P_t	G	P_a	T_t	T_o	T_a	E_o	E_{ss}	W	W_t	R_o	R_a	R_r	P_v	H_a
Test	1.0	1.0	1.0	1.0			1.0											
Construction	1.0	1.0	1.0					1.0				1.0						
Normal	1.0	1.0	1.0		1.0			1.0						1.0			1.0	
Factored																		
Severe Environmental	1.0	1.3	1.0		1.0			1.0		1.5				1.0			1.0	
	1.0	1.3	1.0		1.0			1.0				1.5		1.0			1.0	
Extreme Environmental	1.0	1.0	1.0		1.0			1.0			1.0			1.0			1.0	
	1.0	1.0	1.0		1.0			1.0					1.0	1.0			1.0	
Abnormal	1.0	1.0	1.0		1.0	1.5			1.0						1.0			
	1.0	1.0	1.0		1.0	1.0			1.0						1.25			
	1.0	1.0	1.0		1.25	1.25			1.0						1.0			
Abnormal/ Severe Environmental	1.0	1.0	1.0		1.0	1.25			1.0	1.25					1.0			
	1.0	1.0	1.0		1.0	1.25			1.0			1.25			1.0			
	1.0	1.0	1.0		1.0			1.0		1.0								1.0
	1.0	1.0	1.0		1.0			1.0				1.0						1.0
Abnormal/ Extreme Environmental	1.0	1.0	1.0		1.0	1.0			1.0		1.0				1.0	1.0		

NOTE:

1. Includes all temporary construction loading during and after construction of containment.

Table 3.8.1-3 Temperature Gradients of the R/B and PCCV (Sheet 1 of 2)

Area (See Figure 3.8.1-9 for Identification of Location)		Normal Operation, T_o (°F)		Accident Condition T_a (°F)	
		Winter	Summer	Pipe Break in Refueling Cavity (Winter, Summer)	Pipe Break in SG Compartment (Winter, Summer)
1 Annulus / Safeguard Component Room		50	105	50,130	50,130
2 CCW Pump/Heat Exchanger Room		50	105	50, 130	50, 130
3 M/D, T/D, Emergency Feed Water Rooms		50	105	equal to temperature during normal operation	equal to temperature during normal operation
4 Class 1E Switchgear Room		50	95	equal to temperature during normal operation	equal to temperature during normal operation
5 Buttress Shaft		-40	115	equal to temperature during normal operation	equal to temperature during normal operation
6 Main Control Room		73	78	equal to temperature during normal operation	equal to temperature during normal operation
6' Remote Shutdown Station		73	78	equal to temperature during normal operation	equal to temperature during normal operation
7 Class 1E Battery Charger Room		50	95	equal to temperature during normal operation	equal to temperature during normal operation
8 Class 1E I&C Room		68	79	equal to temperature during normal operation	equal to temperature during normal operation
9 Class 1E Battery Room		50	95	equal to temperature during normal operation	equal to temperature during normal operation
10 MS/FW Piping Room		50	130	equal to temperature during normal operation	equal to temperature during normal operation
11 Safety HVAC Equipment Room		50	105	50, 130	50, 130
12 Spent Fuel Pit Water	Normal operation	120		equal to temperature during normal operation	equal to temperature during normal operation
	single failure	140		-	-
13 MG Set Room		50	95	equal to temperature during normal operation	equal to temperature during normal operation
14 Auxiliary Feed Water Pit Water		50	105	equal to temperature during normal operation	equal to temperature during normal operation
15 Control Rod Drive Mechanism Panel Room		50	95	equal to temperature during normal operation	equal to temperature during normal operation
16 Fuel Handling Area		50	105	equal to temperature during normal operation	equal to temperature during normal operation
17 CCW Surge Tank Area		50	105	50, 130	50, 130
18 R/B Atmosphere (except 1-17)		50	105	equal to temperature during normal operation	equal to temperature during normal operation
19 PCCV Atmosphere		105	120	Figure 3.8.1-10	Figure 3.8.1-10
20 SG Compartment Atmosphere		105	120	Figure 3.8.1-10	Figure 3.8.1-12
21 Primary Shield Atmosphere(1)		105	120	Figure 3.8.1-13	Figure 3.8.1-10

Table 3.8.1-3 Temperature Gradients of the R/B and PCCV (Sheet 2 of 2)

Area	Normal Operation, T_o (°F)		Accident Condition T_a (°F)	
(See Figure 3.8.1-5 for Identification of Location)	Winter	Summer	Pipe Break in Refuling Cavity (Winter, Summer)	Pipe Break in SG Compartment (Winter, Summer)
22 Refueling Cavity Atmosphere (upper)(2)	150		See (4)	See (4)
23 Refueling Cavity Atmosphere (lower)(3)	105	120	See (4)	See (4)
24 PCCV Sump Pool Water (except RWSP)(5)	-		Figure 3.8.1-11	Figure 3.8.1-11
25 SG Compartment Sump Water	-		Figure 3.8.1-11	Figure 3.8.1-12
26 Refueling Cavity Sump Water	-		Figure 3.8.1-13	Figure 3.8.1-11
27 RWSP Water(6)	105	120	Figure 3.8.1-11	Figure 3.8.1-11
28 PCCV Sump Pump Area	105	120	Figure 3.8.1-11	Figure 3.8.1-11
29 Outdoor Air Temperature	-40	115	equal to temperature during normal operation	equal to temperature during normal operation
30 Basemat Side Temperature	calculated by the linear interpolation between earth temperature and outdoor air temperature			
31 Earth Temperature	35	80	equal to temperature during normal operation	equal to temperature during normal operation

NOTES:

1. Above EL. 46 ft, 11 in.
2. EL. 7 ft, 2-1/2 in. ~ 46 ft, 11 in.
3. Below EL. 7 ft, 2-1/2 in.
4. Below EL. 25 ft, 9 in., the temperature of “26 Refueling Cavity Sump Water” is applied. EL. 25 ft, 9 in. is the maximum water level in a LOCA. From EL. 25 ft, 9 in. ~ 46 ft, 11 in., the temperature of “Primary Shield atmosphere” is applied.
5. The following temperature conditions are applied to a HVAC header room, a PCCV coolant drain pump area, and a PCCV coolant drain tank area. Below EL. 25 ft, 9 in., the temperature of “24 PCCV sump pool water” is applied. EL. 25 ft, 9 in. is the maximum water level in a LOCA. Above EL. 25 ft, 9 in., the temperature of “19 PCCV Atmosphere” is applied.
6. The water level of the RWSP is EL. 18 ft, 4-3/8 in. in a normal operation mode and EL. 10 ft, 6 in. in a recirculation mode.

Table 3.8.1-4 Summary of PCCV Models and Analysis Methods

Model	Analysis Method	Program	Purpose
FE shell	Static analyses	NASTRAN	To calculate PCCV shell stress including the buttresses and vicinity of the large openings such as the equipment hatch and personnel airlocks
FE shell	Static analyses	NASTRAN	To calculate local shell stress in vicinity of the main steam pipes and feedwater pipes

Table 3.8.3-1 Type of Construction and Dead Weight of Floor Sections

Location	Member	Content	Unit Weight (lb/ft^3)	Self Weight (lb/ft^2)	Self Weight psi
EL3'-7"	Cover Concrete	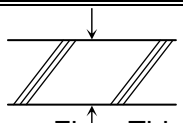 Liner (0.65") Concrete Floor Thickness = 20"	150	30 250 280	1.94
EL16'-0" (Header Room)	Concrete Floor	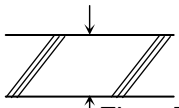 Concrete Floor Thickness = 169"	150	2,113 2,113	14.67
EL25'-3" (General Floor)	Concrete Floor	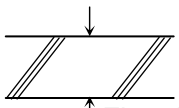 Concrete Floor Thickness =40"	150	500 500	3.47
EL25'-3" (RWSP Ceiling at Accumulator)	Concrete Floor	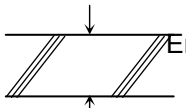 Concrete Embedded Stainless Steel Form Floor Thickness = 51"	150	640 25 665	4.62
EL25'-3" (RWSP Ceiling/ General)	Concrete Floor	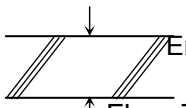 Concrete Embedded Stainless Steel Form Floor Thickness = 40"	150	500 25 525	3.65
EL50'-2"	Concrete Floor	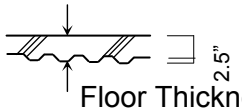 Concrete Metal Deck Beams 2.5" Floor Thickness = 16"	150	200 7 33 240	1.67
EL76'-5"	Concrete Floor	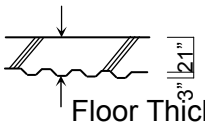 Concrete Metal Deck Beams 2.1" 3" Floor Thickness = 24"	150	300 7 33 340	2.36
EL97'-9" EL121'-4"	Grating Floor	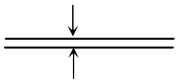 Grating Beams Floor Thickness =1.75"		11 32 43	0.30
EL139'-6"	Concrete Floor	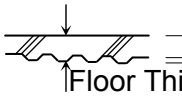 Concrete Metal Deck Beams 1.9" 3" Floor Thickness = 22"	150	275 7 33 315	2.19

Table 3.8.3-2 Design Pressures within Containment Internal Structure

Compartment No.	Compartment	Design Pressure psi
SG1	SG Compartment (25'-3" - 36'-5")	18
SG2	SG Compartment (36'-5" - 46'-6.3")	18
SG3	SG Compartment (46'-6.3" - 55'-1")	7
SG4	SG Compartment (55'-1" - 79'-1")	7
SG5	SG Compartment (79'-1" - 85'-9")	7
SG6	SG Compartment (85'-9" - 95'-1")	14
Pzr1	Pressurizer Surge Line Compartment (25'-3" – 58'-5")	2
Pzr 2	Pressurizer Compartment (58'-5" - 76'-1")	14
Pzr 3	Pressurizer Compartment (76'-1" - 89'-9")	
Pzr 4	Pressurizer Compartment (89'-9" - 116'-8")	
Pzr 5	Pressurizer Compartment (116'-8" - 127'-10")	
Pzr 6	Pressurizer Compartment (127'-10" - 139'-6")	
V1	Gallery	39
V2	RV Annulus Lower	14
V3	NIS Box	18
V4	Incore Instrumentation Chase	

Table 3.8.3-3 Summary of Containment Internal Structure Models and Analysis Methods

Computer Program and Model	Analysis Method	Purpose	Concrete Stiffness(1)
Three Dimensional NASTRAN FE of containment internal structure fixed at elevation 1 ft, 11 in.	Static Analysis	To obtain member forces	Monolithic Case 1
Three Dimensional NASTRAN FE of containment internal structure built into R/B whole model	Static Analysis	To obtain member forces for thermal load	Monolithic Case 1(2) (Cracked Case 2)

Notes:

1. See Table 3.8.3-4 for stiffness case description.

2. The stress analysis is performed based on the monolithic concrete stiffness, but the thermal stress is reduced by the reduction factor α (=0.5) which is described in the Notes of Table 3.8.3-4.

Table 3.8.3-4 Axial, Shear and Flexural Stiffness of SC Module Walls

Case	Analysis Assumption	Wall Thickness	Stiffness(1),(2)		
			Axial EA x 10^6 lbs/in	Shear GA x 10^6 lbs/in	Flexural EI x 10^9 lbs.in^2/in
1	<FEM Stress Analysis> Monolithic section with steel plates and uncracked concrete.	56 in.	227.3	95.9	72.3
		48 in.	198.4	83.6	47.5
		39 in.	166.0	69.7	27.2
2	<Evaluation of Thermal Stress> Cracked section with steel plates and concrete (no concrete tension stiffness); Considering the reduction of stiffness by flexural concrete crack	each	α x each value of Case 1 where α: Reduction Factor(3)		

NOTES:

1. The stiffnesses EA, GA and EI are calculated per unit length of the wall based on the following equations:

$$EA = E_cA_c + E_sA_s,$$
$$GA = G_cA_c + G_sA_s,$$
$$EI = E_cI_c + E_sI_s$$

2. Stiffness calculations are based on the following material properties:

E_c = 3,605,000 psi,
E_s = 29,000,000 psi,
$\upsilon_c = 0.17$, $\upsilon_s = 0.30$

3. α is set to 0.5 because the typical reduction ratio of flexural stiffness by crack nearly equal to 0.5. For example, the flexural stiffness of cracked section is 22.2x10^9 lbs-in^2/in for 48 in. wall, therefore the calculated reduction ratio is 0.47.

Table 3.8.3-5 Definition of Critical Locations and Thicknesses for Containment Internal Structure(1)

Wall Description	Applicable Wall Location	Applicable Elevation Range	Member Thickness(2)	Thickness of Face Plates Provided
Wall 1	North-east wall of refueling cavity	elevation 46’, 11” to 76’, 5”	4’, 8” wall with 0.5-in. thick steel plate on inside and outside of wall	0.5 in.
Wall 2	North-west wall of secondary shield	elevation 50’, 2” to 76’, 5”	4’, 0” wall with 0.5-in. thick steel plate on inside and outside of wall	0.5 in.
Wall 3	North-east wall of RWSP	elevation 1’, 11” to 25’, 3”	3’, 3” wall with 0.5-in. thick steel plate on inside and outside of wall	0.5 in.

NOTES:

1. The applicable elevation levels are identified and included in Figure 3.8.3-11.
2. The member thickness includes the steel face plates.

Table 3.8.3-6 Critical Portions of the SC Modules

Wall Description	Applicable Wall Location	Element Number	Plate Thickness Provided	Yield Stress at Design Temperature	Material of Steel Plates
Wall 1	North-east wall of refueling cavity	11343	0.5 in.(1)	50 ksi	100 ksi(2)
Wall 2	North-west wall of secondary shield	1179	0.5 in.(1)	50 ksi	100 ksi(2)
Wall 3	North-east wall of RWSP	11713	0.5 in.(1)	50 ksi	100 ksi(2)

NOTES:

1. This is a lot more than the plate thickness required for load combinations excluding thermal.
2. The maximum stress intensity range for the load combinations including thermal is much lower than the allowable.
3. Material of Steel Plate is ASTM A572, Grade 50.

Table 3.8.4-1 Design Temperatures for Thermal Gradient R/B

STRUCTURE	LOAD	TEMPERATURE °F		REMARK
Roofs & Exterior Walls above Grade Air Temperatures	Normal Thermal T_O	(OUTSIDE) -40 +115	(INSIDE) +70 +70	
	Accident Thermal T_a	-40	+132	MSIV Room Exterior Walls & Roof
Roofs & Exterior Walls above Grade, including MSIV Rooms (4) Concrete Temperatures	Normal Thermal T_O	(OUTSIDE) -21.6 -22.8 -25.4 +3.2 +109.1 +108.0 +107.5 +98.6	(INSIDE) +47.0 +48.4 +51.5 +46.6 +79.2 +80.7 +81.3 +81.3	24 in. thickness 27 in. thickness 36 in. thickness 15 in. insulated roof 24 in. thickness 27 in. thickness 36 in. thickness 15 in. insulated roof
Interior Walls/Slabs	Normal Thermal T_O	(SIDE 1) N/R	(SIDE 2) N/R	
	Accident Thermal T_a	+70	+132	MSIV Room Interior Walls & Slabs
Exterior Walls Below Grade	Normal Thermal T_O	Note (3)	Note (3)	
	Accident Thermal T_a	N/R	N/R	
Basemat	Normal Thermal T_O	Note (4)	Note (4)	
	Accident Thermal T_a	N/R	N/R	
R/B	Normal Thermal T_O	(OUTSIDE) -40 +115	(INSIDE) +70 +70	
	Accident Thermal T_a	-40 N/R	+132 N/R	MSIV Room Wall Rest of Wall

Notes:

1. N/R in the above Table means that the loads due to a thermal gradient are not required to be considered. MSIV = Main Steam Isolation Valve.
2. Average ambient temperature used for construction ranges from 35° F to 80° F.
3. Temperature at exterior walls below grade is linearly applied from applicable outside temperature to basemat temperature
4. The basemat subgrade temperature ranges from 35°F to 80°F.
5. Design temperatures for thermal gradient in exterior walls and roof of fuel handling area are included in Appendix B of these criteria.
6. The exterior wall of the MSIV area is 24 in. thick except for the portion where the piping is anchored. This 48 in. thickness is perforated with many holes and should use the same surface temperatures as those specified for the adjacent 24 in. thick walls.

Table 3.8.4-2 Temperature Gradients of the PS/Bs

Area (See Figure 3.8.1-5 for Identification of Location)	Normal Operation T_o (°F)		Accident Condition T_a (°F)	
	Winter	Summer	Winter	Summer
1 Safety Chiller Unit & Pump Room	50	105	equal to temperature during normal operation	equal to temperature during normal operation
2 Auxiliary Component Room	50	105	equal to temperature during normal operation	equal to temperature during normal operation
3 Battery Room	65	77	equal to temperature during normal operation	equal to temperature during normal operation
4 Gas Turbine Room	50	105	50	130
5Tray Space	50	105	equal to temperature during normal operation	equal to temperature during normal operation
6 Outdoor Air Temperature	-40	115	equal to temperature during normal operation	equal to temperature during normal operation
7 Basemat Side Temperature	calculated by the linear interpolation between earth temperature and outdoor air temperature			
8 Earth Temperature	35	80	equal to temperature during normal operation	equal to temperature during normal operation
9 PS/B Atmosphere (except 1-5)	50	105	equal to temperature during normal operation	equal to temperature during normal operation

Table 3.8.4-3 Load Combinations and Load Factors for Seismic Category I Concrete Structures

LOAD COMBINATIONS AND FACTORS(1),(2)												
ACI 349 Load Combination:		**1**	**2**	**3**	**4**	**5(7)**	**6(6)**	**7(6), (7)**	**8(6), (7)**	**9**	**10**	**11**
Load Type												
Dead	D	1.4	1.4	1.4	1.0	1.0	1.0	1.0	1.0	1.05	1.05	1.05
Liquid	F	1.4	1.4	1.4	1.0	1.0	1.0	1.0	1.0	1.05	1.05	1.05
Live	L	1.7	1.7	1.7	1.0	1.0	1.0	1.0	1.0	1.3	1.3	1.3
Earth	H	1.7	1.7	1.7	1.0	1.0	1.0	1.0	1.0	1.3	1.3	1.3
Design pressure	P_d											
Normal pipe reactions	R_o	1.7	1.7	1.7	1.0	1.0				1.3	1.3	1.3
Normal thermal	T_o				1.0	1.0				1.2(5)	1.2(5)	1.2(5)
Wind	W			1.7								1.3
OBE	E_{ob}		1.7(3)					1.15(3)			1.3(3)	
SSE	E_{ss}				1.0(4)				1.0(4)			
Tornado	W_t					1.0						
Accident pressure	P_a						1.4(5)	1.15	1.0			
Accident thermal	T_a						1.0	1.0	1.0			
Accident thermal pipe reactions	R_a						1.0	1.0	1.0			
Pipe rupture reactions	Y_r							1.0	1.0			
Jet impingement	Y_j							1.0	1.0			
Pipe Impact	Y_m							1.0	1.0			

Notes:

1. Design per ACI-349 Strength Design Method for all load combinations
2. Where any load reduces the effects of other loads, the corresponding coefficient for that load is taken as 0.9 if it can be demonstrated that the load is always present or occurs simultaneously with the other loads. Otherwise the coefficient is taken as zero.
3. OBE loading is applicable for site-specific seismic category I SSCs, only if the value of site-specific OBE is set higher than 1/3 of the site-specific SSE.
4. SSE includes all seismic related hydrodynamic loads and percentage of live loads
5. Load factor adjusted in accordance with RG 1.142, Regulatory Position 6.
6. The maximum values of P_a, T_a, R_a, Y_j, Y_r, and Y_m including an appropriate dynamic load factor are used, unless an appropriate time history analysis is performed to justify otherwise.
7. Satisfy the load combination first without W_t, Y_r, Y_j, and Y_m. When considering concentrated loads, exceedences of local strengths and stresses may be considered in analyses for impactive or impulsive effects in accordance with ACI 349-97, Appendix C, except as noted in RG 1.142 Regulatory Positions 10 and 11.

Table 3.8.4-4 Load Combinations and Load Factors for Seismic Category I Steel Structures

ALLOWABLE STRESS DESIGN (ASD) LOAD COMBINATIONS AND APPLICABLE STRESS LIMIT COEFFICIENTS													
AISC N690 Load Combination: (6)		**1**	**2**	**3(9)**	**4(9)**	**5(9)**	**6(9)**	**7**	**8**	**9(4)**	**9a(4)(10)**	**10(4)(5)**	**11(4)(5)**
Load Type													
Dead	D	1.0	1.0	1.0	1.0	1.0	1.0	1.0	1.0	1.0	1.0	1.0	1.0
Live	L	1.0	1.0	1.0	1.0	1.0	1.0	1.0	1.0	1.0	1.0	1.0	1.0
Normal pipe reactions	R_o		1.0			1.0	1.0	1.0	1.0				
Normal thermal	T_o		1.0			1.0	1.0	1.0	1.0				
Wind	W			1.0		1.0							
OBE	E_{ob}				1.0		1.0						
SSE	E_{ss}								1.0				1.0
Tornado	W_t							1.0					
Accident pressure	P_a									1.0		1.0	1.0
Accident thermal	T_a									1.0	1.0	1.0	1.0
Accident thermal pipe reactions	R_a									1.0	1.0	1.0	1.0
Pipe rupture reactions	Y_r											1.0	1.0
Jet impingement	Y_j											1.0	1.0
Pipe Impact	Y_m											1.0	1.0
Stress Limit Coefficient (1)(2)(8)		1.0(3)	1.0(3)	1.0(3)	1.0(3)	1.0(3)	1.0(3)	1.6(7)(11)	1.6(7)(11)	1.6(7)(11)	1.6(7)(11)	1.6(7)(11)	1.7(7)(11)

Notes:

1. Coefficients are applicable to primary stress limits given in ANSI/AISC N690-1994 Sections Q1.5.1, Q1.5.2, Q1.5.3, Q1.5.4, Q1.5.5, Q1.6, Q1.10, and Q1.11.
2. In no instance shall the allowable stress exceed $0.7F_u$ in axial tension nor $0.7F_u$ times the ratio Z/S for tension plus bending.
3. For primary plus secondary stress, the allowable limits are increased by a factor of 1.5.
4. The maximum values of P_a, T_a, R_a, Y_j, Y_r, and Y_m, including an appropriate dynamic load factor, is used in load combinations 9 through 11, unless an appropriate time history analysis is performed to justify otherwise.
5. In combining loads from a postulated high-energy pipe break accident and a seismic event, the SRSS may be used, provided that the responses are calculated on a linear basis.
6. All load combinations is checked for a no-live-load condition
7. In load combinations 7 through 11, the stress limit coefficient in shear shall not exceed 1.4 in members and bolts.
8. Secondary stresses which are used to limit primary stresses are treated as primary stresses.
9. Consideration is also given to snow and other loads as defined in ASCE 7.
10. This load combination is to be used when the global (non-transient) sustained effects of T_a are considered.
11. The stress limit coefficient where axial compression exceeds 20% of normal allowable, is 1.5 for load combinations 7, 8, 9, 9a, and 10, and 1.6 for load combination 11.

Table 3.8.4-5 Summary of R/B and PS/Bs Models and Analysis Methods

Computer Program and Model	Analysis Method	Purpose	Concrete Stiffness
Three-dimensional NASTRAN FE of R/B model fixed at elevation 3 ft, 7 in.	Static Analysis	To obtain member forces	Monolithic
Three-dimensional NASTRAN FE of R/B whole model	Static Analysis	To obtain member forces for thermal load	Monolithic(1)
Three-dimensional NASTRAN FE of PS/B model	Static Analysis	To obtain member forces	Monolithic(1)

Note:

1. The stress analysis is performed based on the monolithic concrete stiffness, but the thermal stress is reduced by the reduction factor α (=0.5).

Table 3.8.4-6 West Exterior Wall, SECTION 1, Details of Wall Reinforcement

	Provided Reinforcement		
	Vertical	**Horizontal**	**Shear**
WALL ZONE 1 (Concrete Thickness 40 in.) El 3'-7'' → El 25'-3''			
Outside	#11@12"+#11@12"	#11@6"+#11@12"	-
Inside	#11@12"+ #10@12"	#11@12"+ #10@12""	
WALL ZONE 2 (Concrete Thickness 40 in.) El 25'-3'' → El 50'-2''			
Outside	#11@12"+#11@12"	#11@6"+#11@12"	-
Inside	#11@12"	#11@12"	
WALL ZONE 3 (Concrete Thickness 32 in.) El 50'-2'' → El 76'-5''			
Outside	#11@12"	#11@6"	-
Inside	#11@12"	#11@12"	
WALL ZONE 4 (Concrete Thickness 28 in.) El 76'-5'' → El 101'-0''			
Outside	#11@12"	#11@6"	-
Inside	#11@12"	#11@12"	

Table 3.8.4-7 South Interior Wall, SECTION 2, Details of Wall Reinforcement

	Provided Reinforcement		
	Vertical	**Horizontal**	**Shear**
WALL ZONE 1 (Concrete Thickness 44 in.) El 3'-7'' → El 25'-3''			
Each Face	#11@12" +#11@12"	#11@6" +#11@12"	-
WALL ZONE 2 (Concrete Thickness 40 in.) El 25'-3'' → El 50'-2''			
Each Face	#11@12"	#11@12"	-
WALL ZONE 3 (Concrete Thickness 40 in.) El 50'-2'' → El 76'-5''			
Each Face	#11@12"	#11@12"	-
WALL ZONE 4 (Concrete Thickness 40 in.) El 76'-5'' → El 86'-4''			
Each Face	#11@12"	#11@12"+#11@12"	-
WALL ZONE 5 (Concrete Thickness 40 in.) El 86'-4'' → El 101'-0''			
Each Face	#11@12"	#11@12"+#11@12"	-

Table 3.8.4-8 North Exterior Wall of Spent Fuel Pit, SECTION 3, Details of Wall Reinforcement

	Provided Reinforcement		
	Vertical	**Horizontal**	**Shear**
WALL ZONE 1 (Concrete Thickness 93 in.) El 30'-1''→ El 50'-2''			
Outside	#14@6"+#14@6"	#14@6"+#14@6"	-
Inside	#14@12"+#14@12"	#14@12"+#14@12"	
WALL ZONE 2 (Concrete Thickness 93 in.) El 50'-2'' → El 65'-0''			
Outside	#14@6"+#14@6"	#14@6"+#14@6"	-
Inside	#14@12"+#14@12"	#14@12"+#14@12"	
WALL ZONE 3 (Concrete Thickness 152 in.) El 65'-0'' → El 76'-5''			
Outside	#14@6"+#14@12"	#14@6"+#14@6"+#14@12"	-
Inside	#14@12"+#14@12"	#14@12"+#14@12"	

Table 3.8.4-9 South Exterior Wall, SECTION 4, Details of Wall Reinforcement

	Provided Reinforcement		
	Vertical	**Horizontal**	**Shear**
WALL ZONE 1 (Concrete Thickness 44 in.) El 3'-7'' → El 25'-3''			
Outside	#11@6"+#11@6"	#11@6"+#11@12"	-
Inside	#11@12"+#11@12"	#11@12"+#11@12"	
WALL ZONE 2 (Concrete Thickness 40 in.) El 25'-3'' → El 50'-2''			
Outside	#11@6"+#11@12"	#11@6"+#11@12"	-
Inside	#11@12"+#11@12"	#11@12"+#11@12"	
WALL ZONE 3 (Concrete Thickness 40 in.) El 50'-2'' → El 76'-5''			
Outside	#11@12"+#11@12"	#11@6"+#11@12"	-
Inside	#11@12"	#11@12"	
WALL ZONE 4 (Concrete Thickness 40 in.) El 76'-5'' → El 101'-0''			
Outside	#11@12"+#11@12"	#11@12"+#11@12"	-
Inside	#11@12"	#11@12"	
WALL ZONE 5 (Concrete Thickness 40 in.) El 101'-0'' → El 115'-6''			
Outside	#11@12"+#11@12"	#11@12"+#11@12"	-
Inside	#11@12"	#11@12"	

Table 3.8.4-10 Spent Fuel Pit Slab, AREA 3, Details of Slab Reinforcement

	Provided Reinforcement		
	NS-Dir.	**EW-Dir.**	**Shear**
AREA 3 (Concrete Thickness 126 in.) El 30'-1''			
Top & Bottom	#14@12"+#14@12"	#14@12"+#14@12"	-

Table 3.8.4-11 Emergency Feedwater Pit Slab, AREA 4, Details of Slab Reinforcement

	Provided Reinforcement		
	NS-Direction	**EW-Direction**	**Shear**
AREA 4 (Concrete Thickness 52 in.) El 76'-5''			
Top & Bottom	#14@12"	#14@12"	-

Table 3.8.4-12 Typical Reinforcement in PS/B South Exterior Wall – SECTION 1

(On Column Line CP and Between Column Lines 1P & 2P)

	Provided Reinforcement		
	Vertical	**Horizontal**	**Shear**
WALL ZONE 1 (Concrete Thickness 32 in.) El -26'-4'' → El -14'-2''			
Outside	#11@6"	#11@6"	#4 @12" (Vert) #4 @12" (Horiz.)
Inside	#10@12"	#10@12"	
WALL ZONE2 (Concrete Thickness 32 in.) El -14'-2'' → El 3'-7''			
Outside	#11@6"	#11@6"	-
Inside	#10@12"	#10@12"	
WALL ZONE 3 (Concrete Thickness 21 in.) El 3'-7'' → El 24'-2''			
Outside	#10@6"	#11@6"	-
Inside	#10@12"	#10@12"	
WALL ZONE 4 (Concrete Thickness 21 in.) El 24'-2'' → El 39'-6''			
Outside	#10@6"	#11@12"	-
Inside	#10@12"	#10@12"	

Table 3.8.4-13 Typical Reinforcement in PS/B Interior Wall – SECTION 2

(On Column Line 4P and Between Column Lines BP & CP)

	Provided Reinforcement		
	Vertical	**Horizontal**	**Shear**
WALL ZONE 1 (Concrete Thickness 20 in.) El -26'-4'' → El 3'-7''			
Each Face	#11@12"	#11@12"	-

Table 3.8.4-14 Typical Reinforcement in PS/B Floor at Elevation 3′-7″– AREA 1

(Between Column Lines BP & CP - 2P & 3P)

	Provided Reinforcement		
	NS-Dir.	**EW-Dir.**	**Shear**
AREA 1 (Concrete Thickness 32 in.) El 3'-7''			
Top & Bottom	#8@12"	#8@12"	-

Table 3.8.5-1 Load Combinations and Minimum Factors for Seismic Category I Concrete Basemats

Load Combination	Overturning (FS_{ot})	Sliding (FS_{sl})	Flotation (FS_{fl})
D + H + W	1.5	1.5	N/A
D + H + E_s	1.1	1.1	N/A
D + H + W_t	1.1	1.1	N/A
D + F_b	N/A	N/A	1.1

Table 3.8.5-2 Concrete Properties

Part		Compressive Strength f'c	Modulus of Elasticity Ec(1)	Poisson's Ratio υ	Thermal Expansion Coefficient α	Unit Weight γ
PCCV		7,000 psi	4,769 ksi	0.17	0.99×10^{-5}/°C	150lb/ft^3
Containment Internal Structure		4,000 psi	3,605 ksi	0.17	0.99×10^{-5}/°C	150lb/ft^3
R/B		4,000 psi	3,605 ksi	0.17	0.99×10^{-5}/°C	150lb/ft^3
Basemat	Peripheral	4,000 psi	3,605 ksi	0.17	0.99×10^{-5}/°C	150lb/ft^3
	Upper part of Tendon Gallery	7,000 psi	4,769 ksi	0.17	0.99×10^{-5}/°C 5.5×10^{-6}/°F	150lb/ft^3
PS/Bs		4,000 psi	3,605 ksi	0.17	0.99×10^{-5}/°C 5.5×10^{-6}/°F	150lb/ft^3

NOTE :

1. Ec=57,000(Fc)$^{1/2}$ psi (ACI 349 8.5.1)

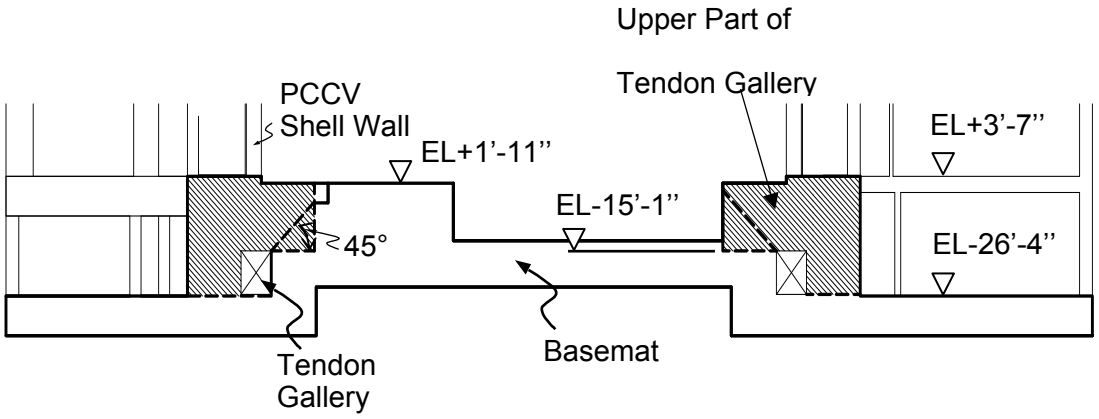

Table 3.8.5-3 Supporting Media Conditions

	Soft Soil	Stiff Soil (Medium 1)	Soft Rock (Medium 2)	Hard Rock (Fixed)
Young's Modulus, E (ksi)	66	928	3,448	5,747
Poisson's Ratio, υ	0.40	0.35	0.35	0.30

Table 3.8.5-4 Section Thickness and Reinforcement Ratios of Basemat Used in the R/B, PCCV, Containment Internal Structure Evaluation (Sheet 1 of 2)

Location	Thickness (in)	Primary Reinforcement					Shear Tie	
		Position	Direction 1*		Direction 2*			
			Arrange-ment	Ratio (%)	Arrange-ment	Ratio (%)	Arrange-ment	Ratio (%)
1 Upper Part of Tendon Gallery	224 (18'-8")	Top	2-#18@1°	0.224	3-#14@12"	0.251	2-#11/2°@ 12"	0.813
		Bottom	2-#14@1°	0.126	2-#14@12"	0.167		
2 Lower Part of Tendon Gallery	124 (10'-4")	Top	2-#14@1°	0.228	2-#14@12"	0.303	2-#11/2°@ 24"	0.406
		Bottom	3-#14@12"	0.454	3-#14@12"	0.454		
3 Lower Part of Cavity	139 (11'-7")	Top	2-#14@12"	0.270	2-#14@12"	0.270	#10@24"× 24"	0.220
		Bottom	3-#14@12"	0.405	3-#14@12"	0.405		
4 Inside Secondary Shield Wall of PCCV mat	312 (26'-0")	Top	2-#14@12"	0.120	2-#14@12"	0.120	#10@24"× 24"	0.220
		Bottom	3-#14@12"	0.180	3-#14@12"	0.180		
5 Outside Secondary Shield Wall of PCCV mat	478 (39'-10")	Top	2-#18@1°	0.101	3-#14@12"	0.118	#10@12"× 24"	0.441
		Bottom	3-#14@12" +1-#14@12"	0.157	3-#14@12" +1-#14@12	0.157		
5aOutside Secondary Shield Wall of PCCV mat	458 (38'-2")	Top	2-#18@1°	0.106	3-#14@12"	0.123	#10@24"× 24"	0.220
		Bottom	3-#14@12" +1-#14@12"	0.164	3-#14@12" +1-#14@12"	0.164		
6 Other than Containment Basemat	119 (9'-11")	Top	2-#14@12"	0.315	2-#14@12"	0.315	#9@36"× 36"	0.077
		Bottom	2-#14@12"	0.315	2-#14@12"	0.315		
6aOther than Containment Basemat	119 (9'-11")	Top	2-#14@12"	0.315	2-#14@12"	0.315	#10@12"× 12"	0.882
		Bottom	2-#14@12"	0.315	2-#14@12"	0.315		
6bOther than Containment Basemat	119 (9'-11")	Top	2-#14@12"	0.315	2-#14@12"	0.315	#10@24"× 24"	0.220
		Bottom	2-#14@12"	0.315	2-#14@12"	0.315		

Table 3.8.5-4 Sectional Thickness and Reinforcement Ratios of Basemat Used in the R/B, PCCV, Containment Internal Structure Evaluation (Sheet 2 of 2)

Note : 1 Upper Part of Tendon Gallery	Direction 1: Radial, Direction 2: Circumferential
2 Lower Part of Tendon Gallery	Direction 1: Top: Radial, Bottom: N-S + Circumferential Direction 2: Top: Circumferential, Bottom: E-W + Circumferential
3 Lower Part of Cavity	Direction 1: N-S, Direction 2: E-W
4 Inside Secondary Shield Wall	Direction 1: N-S, Direction 2: E-W
5 Outside Secondary Shield Wall	Direction 1: Top: Radial, Bottom: N-S + Circumferential Direction 2: Top: Circumferential, Bottom: E-W + Circumferential
6 Other than PCCV Basemat	Direction 1: N-S, Direction 2: E-W

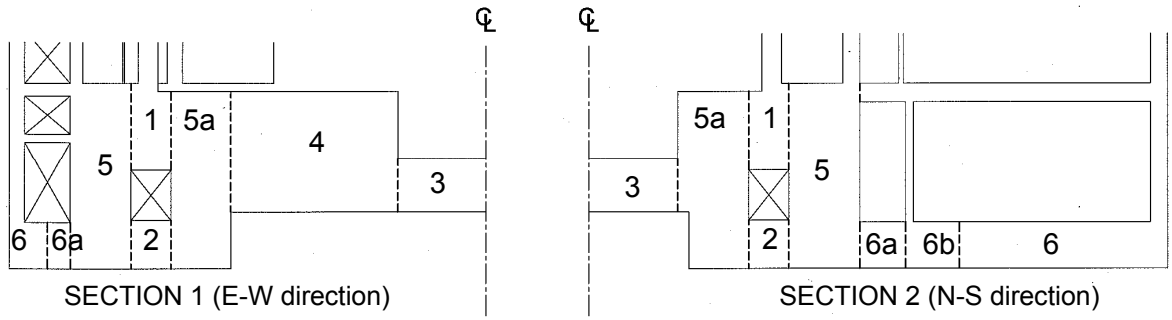

Reinforcement Group

Table 3.8.5-5 Typical Reinforcement in PS/B Basemat

	Provided Reinforcement		
	NS-Dir.	**EW-Dir.**	**Shear**
Concrete Thickness 100 in.			
Top	#11@12”+#11@12”	#11@12”+#11@12”	-
Bottom	#11@12”+#11@12”	#11@12”+#11@12”	-

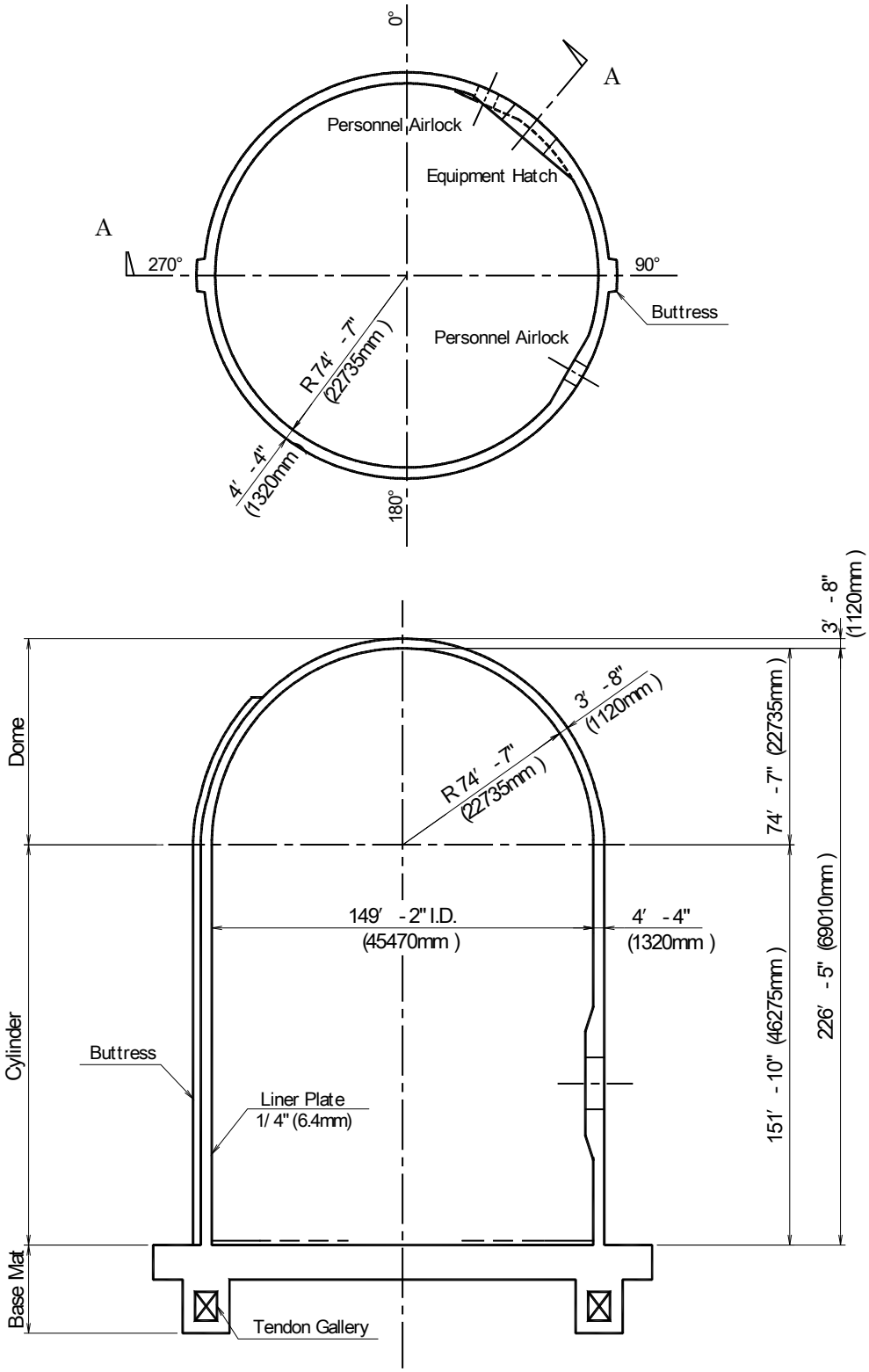

Figure 3.8.1-1 Configuration of PCCV (Sheet 1 of 3)

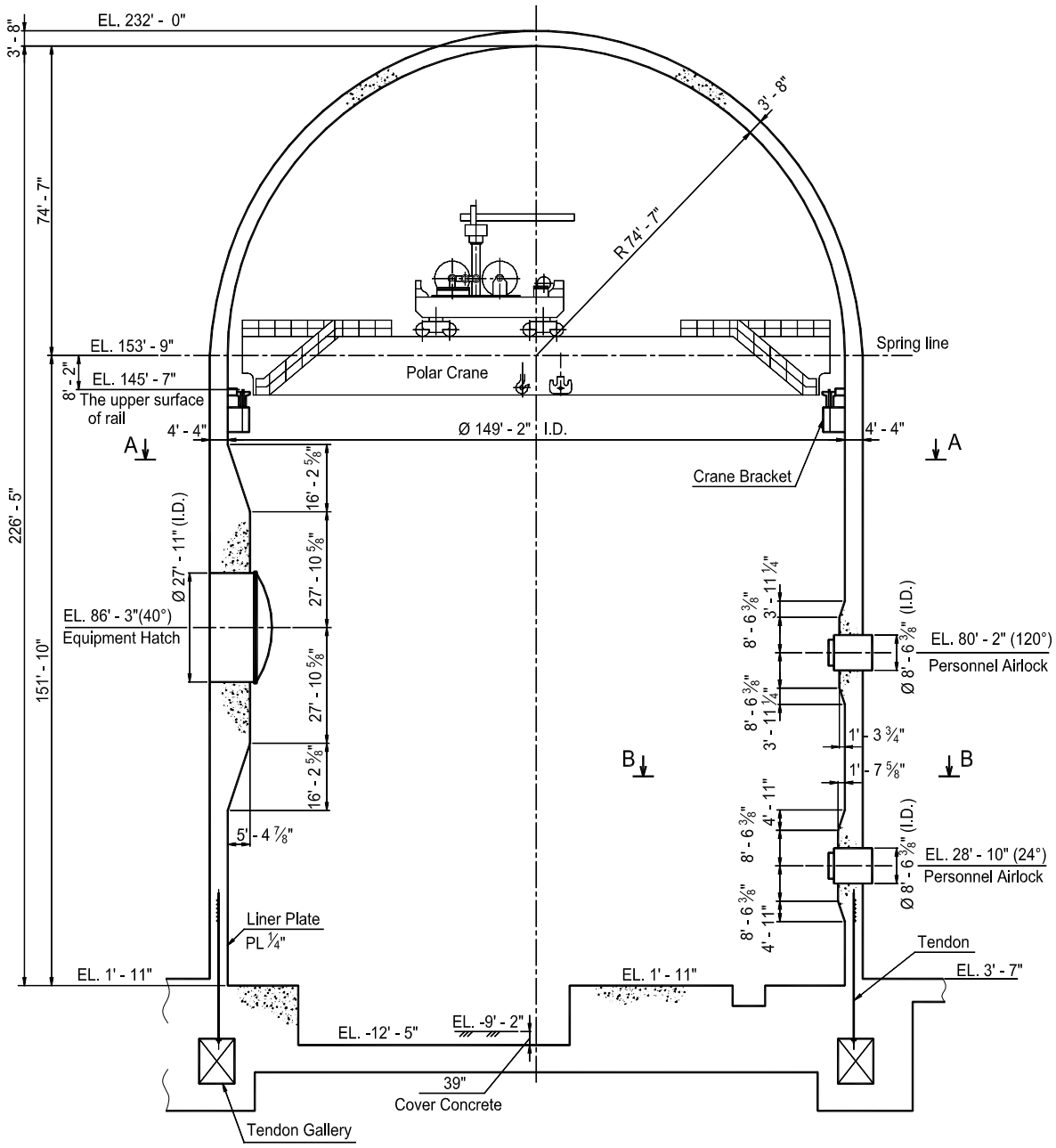

Figure 3.8.1-1 Configuration of PCCV (Sheet 2 of 3)

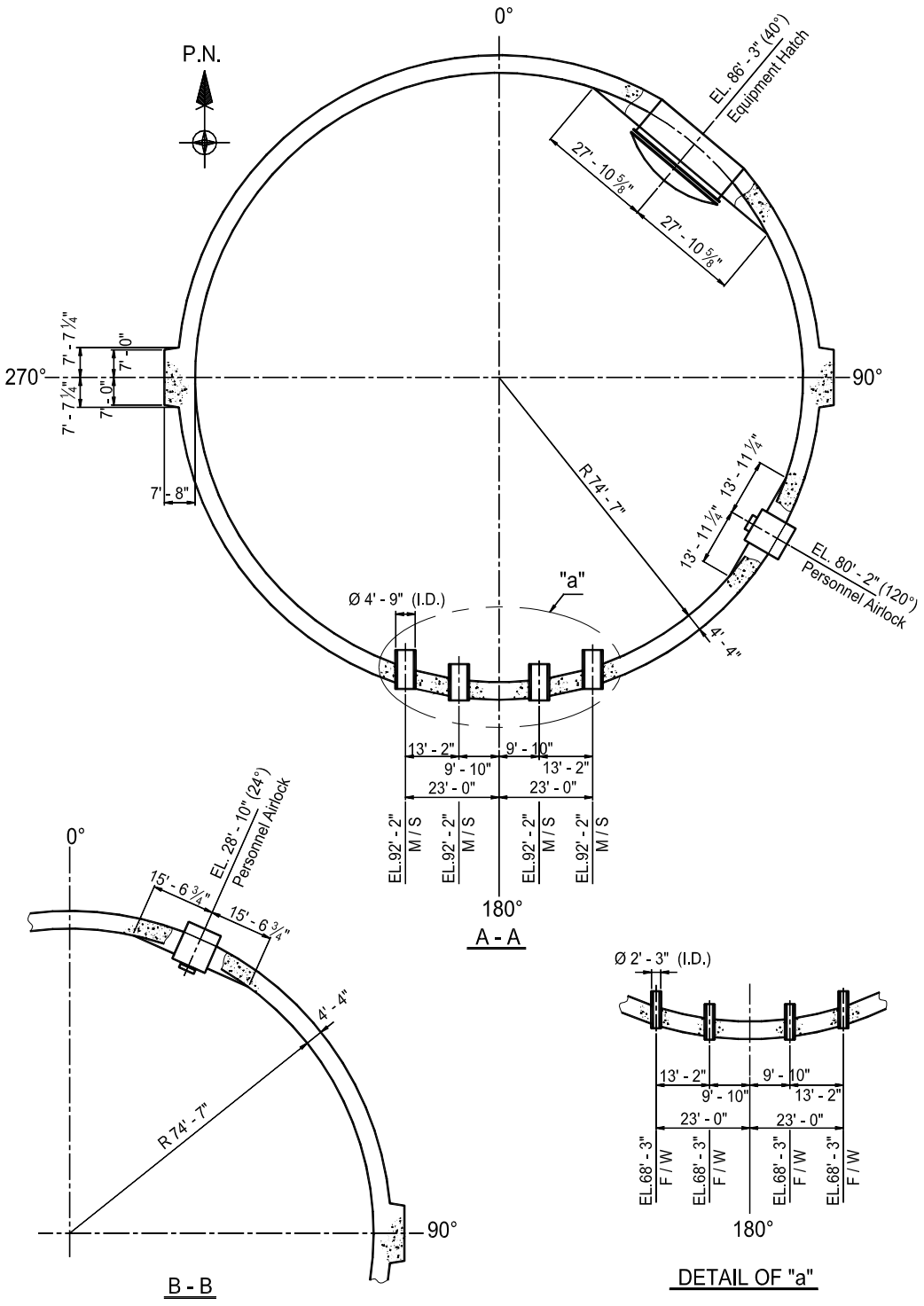

Figure 3.8.1-1 Configuration of PCCV (Sheet 3 of 3)

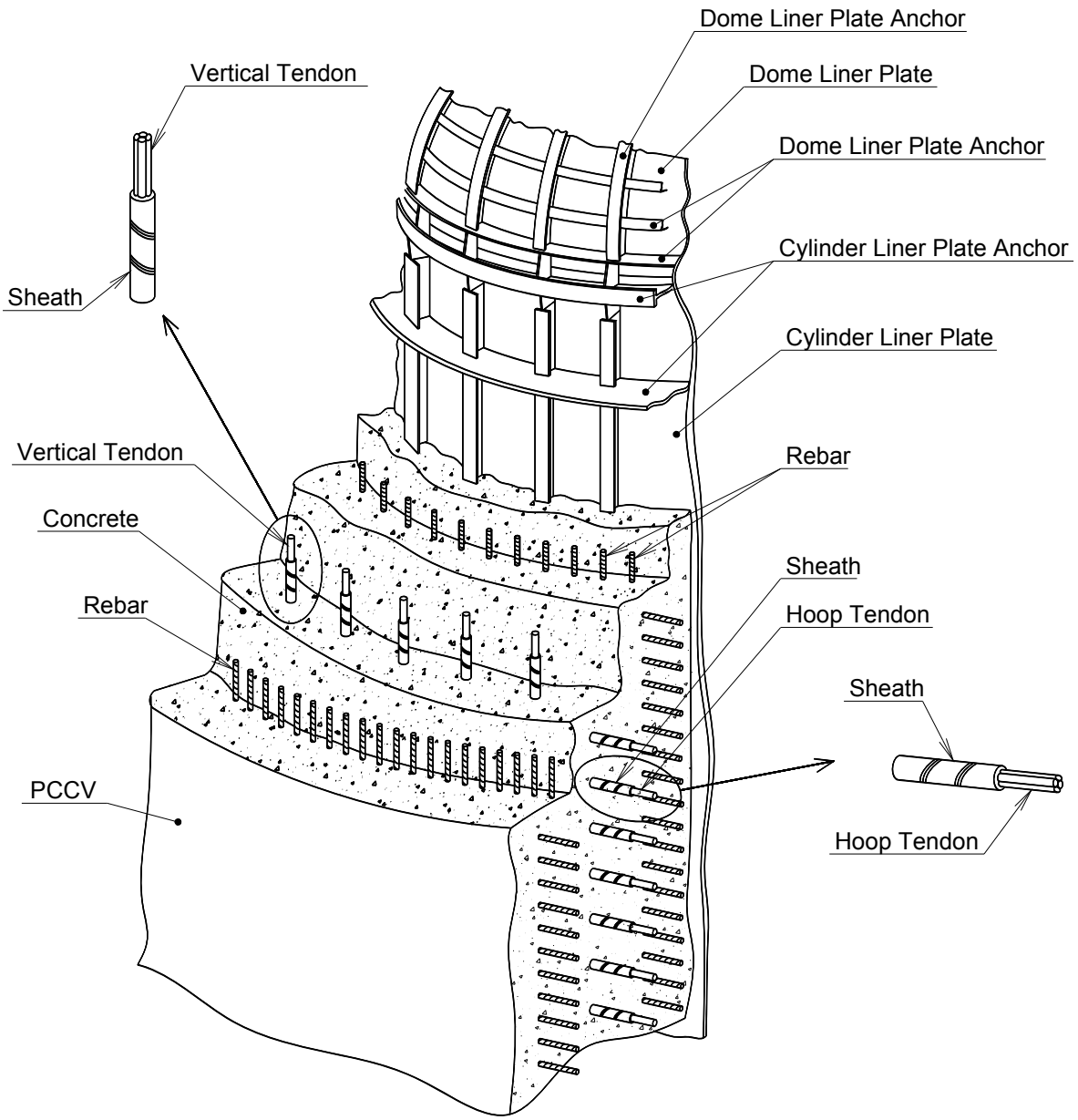

Figure 3.8.1-2 PCCV Schematic Reinforcing and Tendons

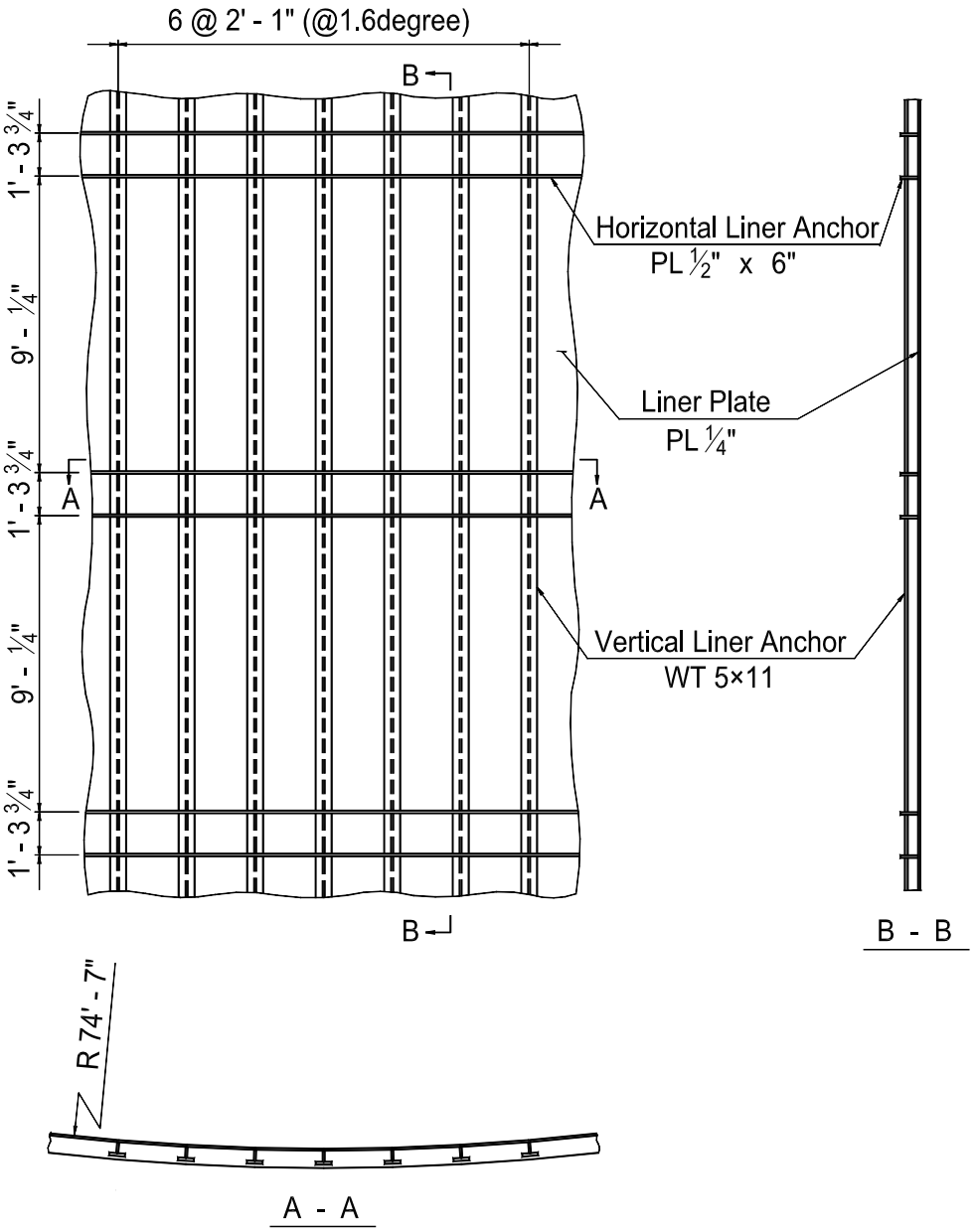

Figure 3.8.1-3 Cylinder Liner Anchorage System

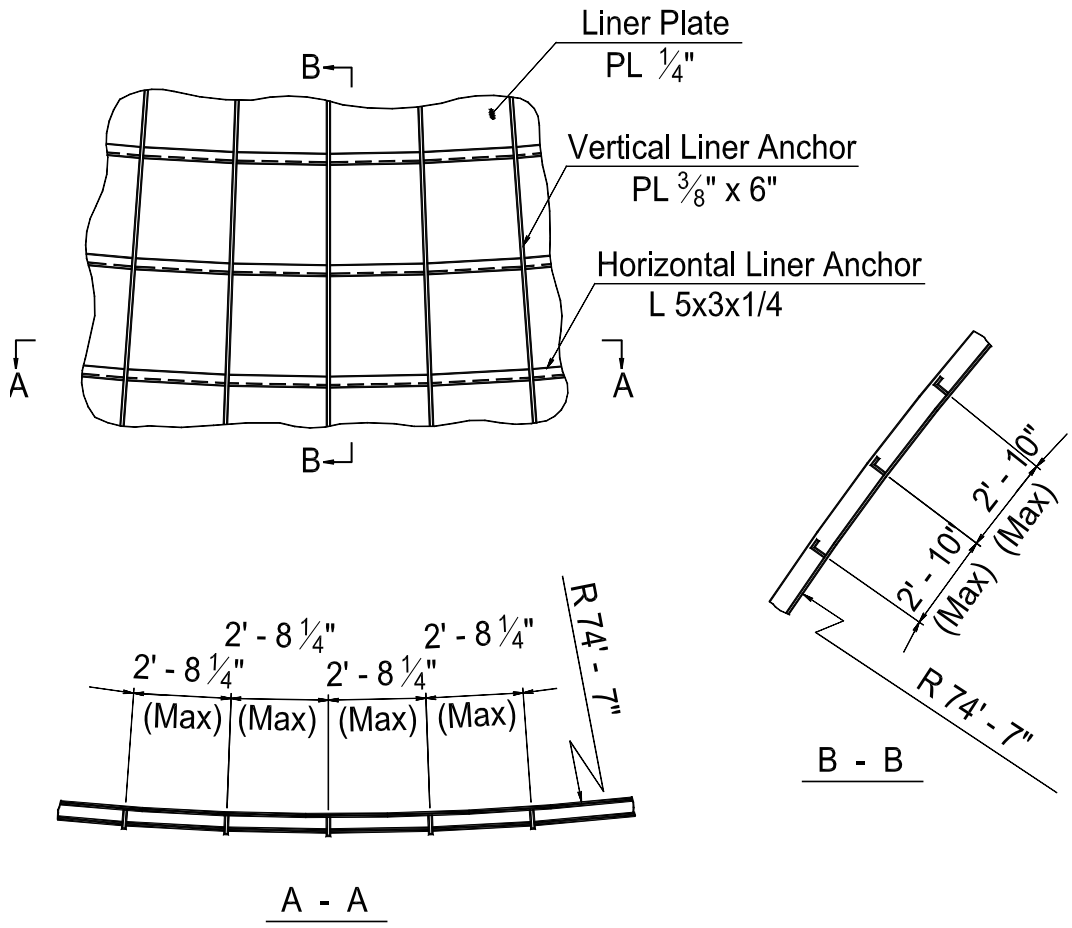

Figure 3.8.1-4 Dome Liner Anchorage System

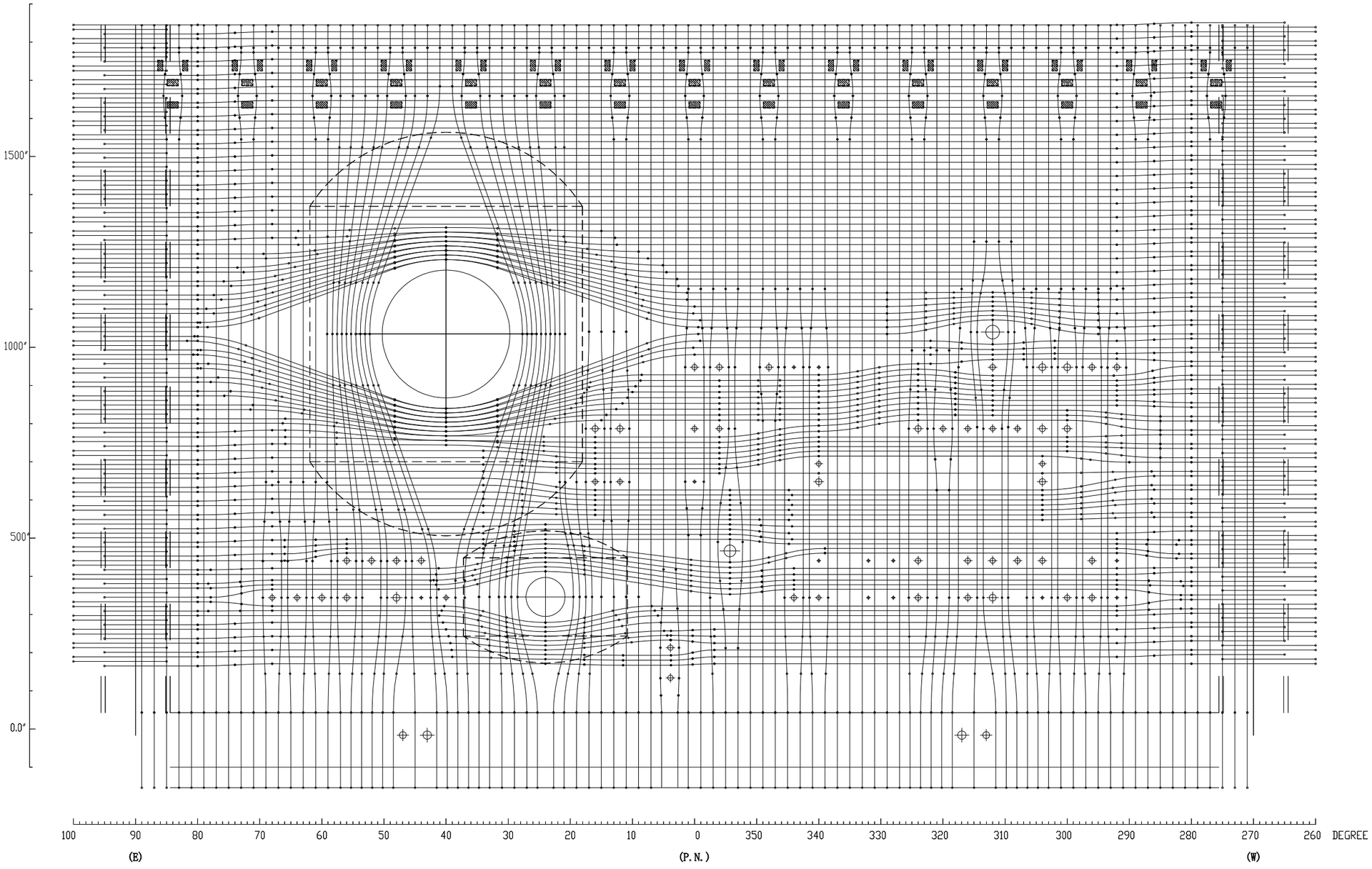

Figure 3.8.1-5 PCCV General Arrangement, Tendons and Reinforcing (Sheet 1 of 16)

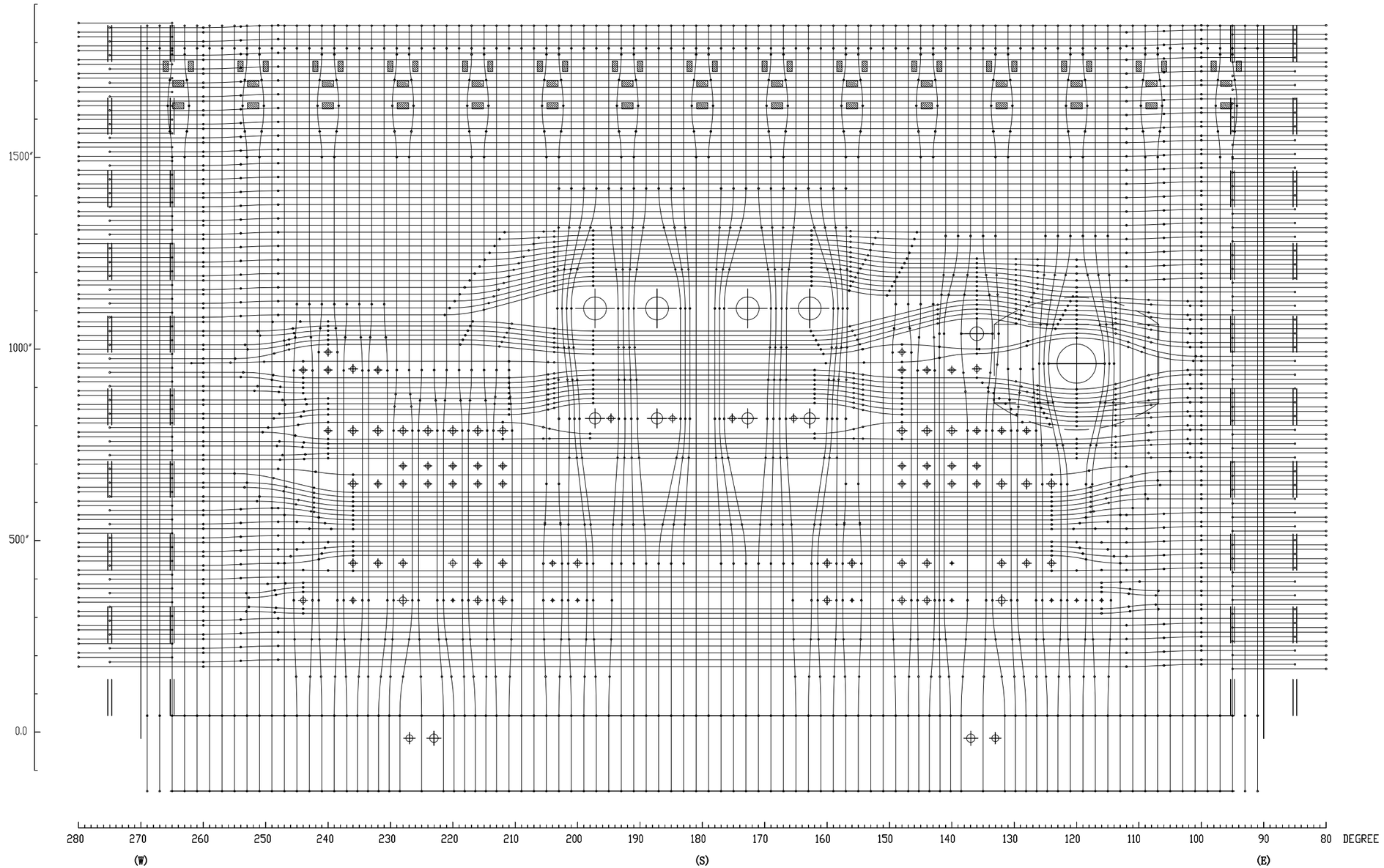

Figure 3.8.1-5 PCCV General Arrangement, Tendons and Reinforcing (Sheet 2 of 16)

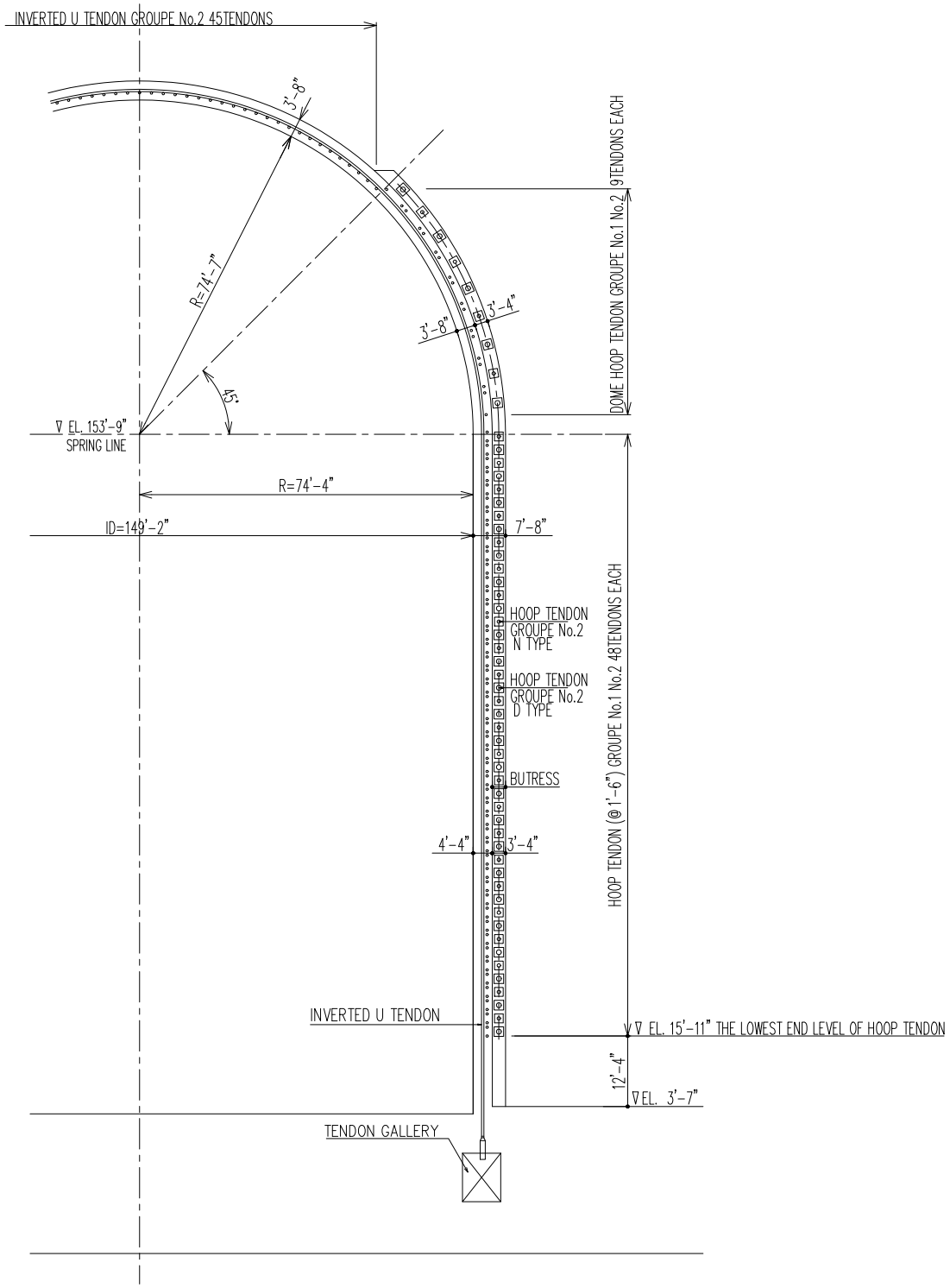

Figure 3.8.1-5 PCCV General Arrangement, Tendons and Reinforcing (Sheet 3 of 16)

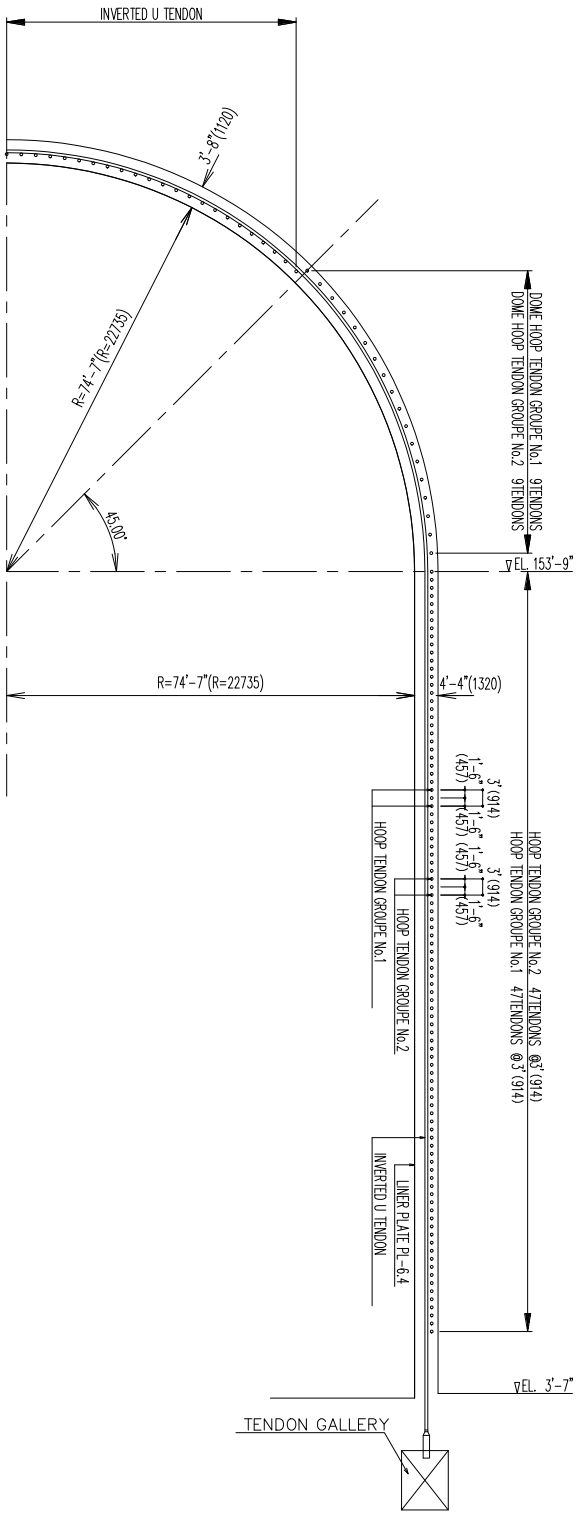

Figure 3.8.1-5 PCCV General Arrangement, Tendons and Reinforcing (Sheet 4 of 16)

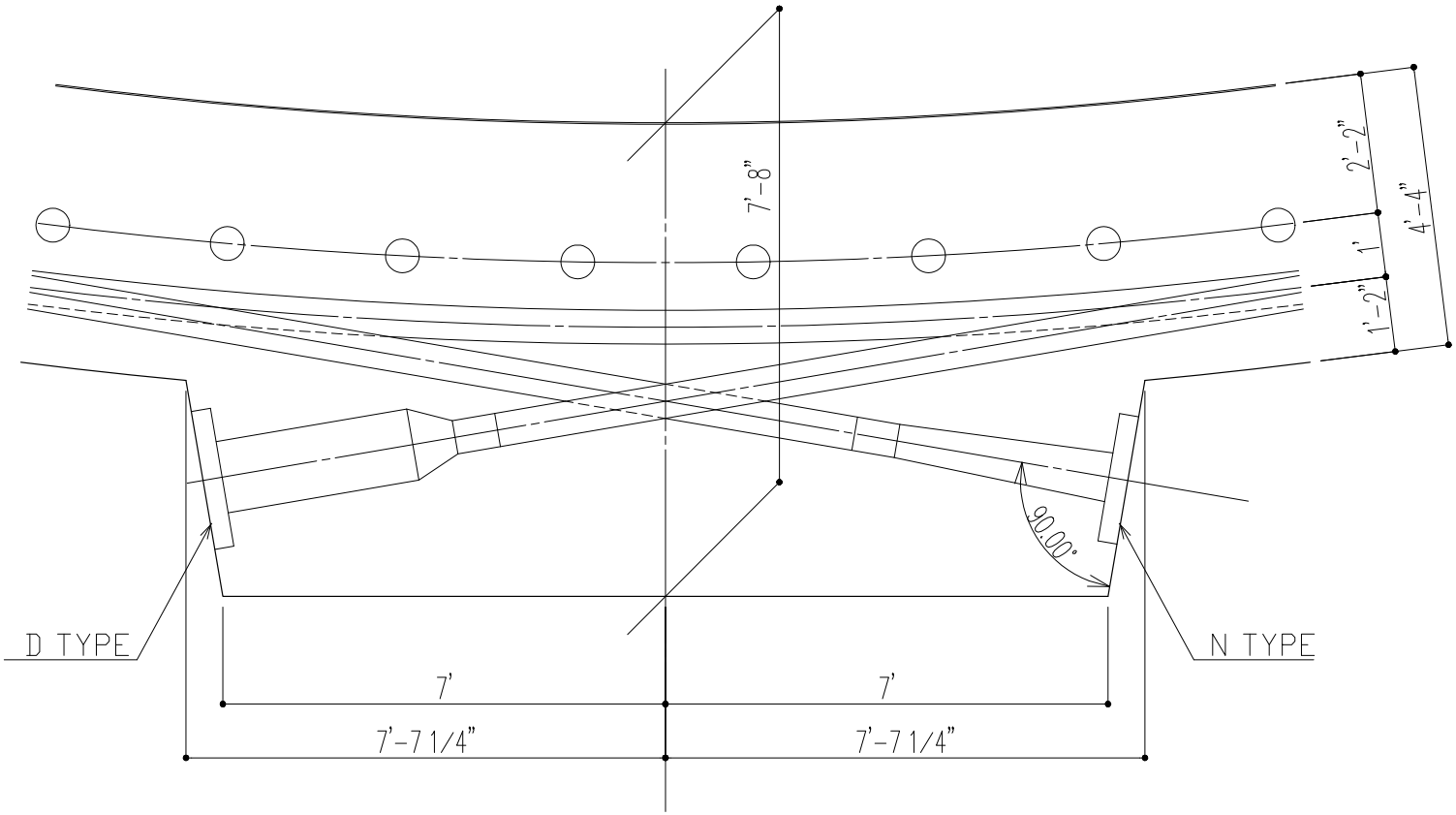

Figure 3.8.1-5 PCCV General Arrangement, Tendons and Reinforcing (Sheet 5 of 16)

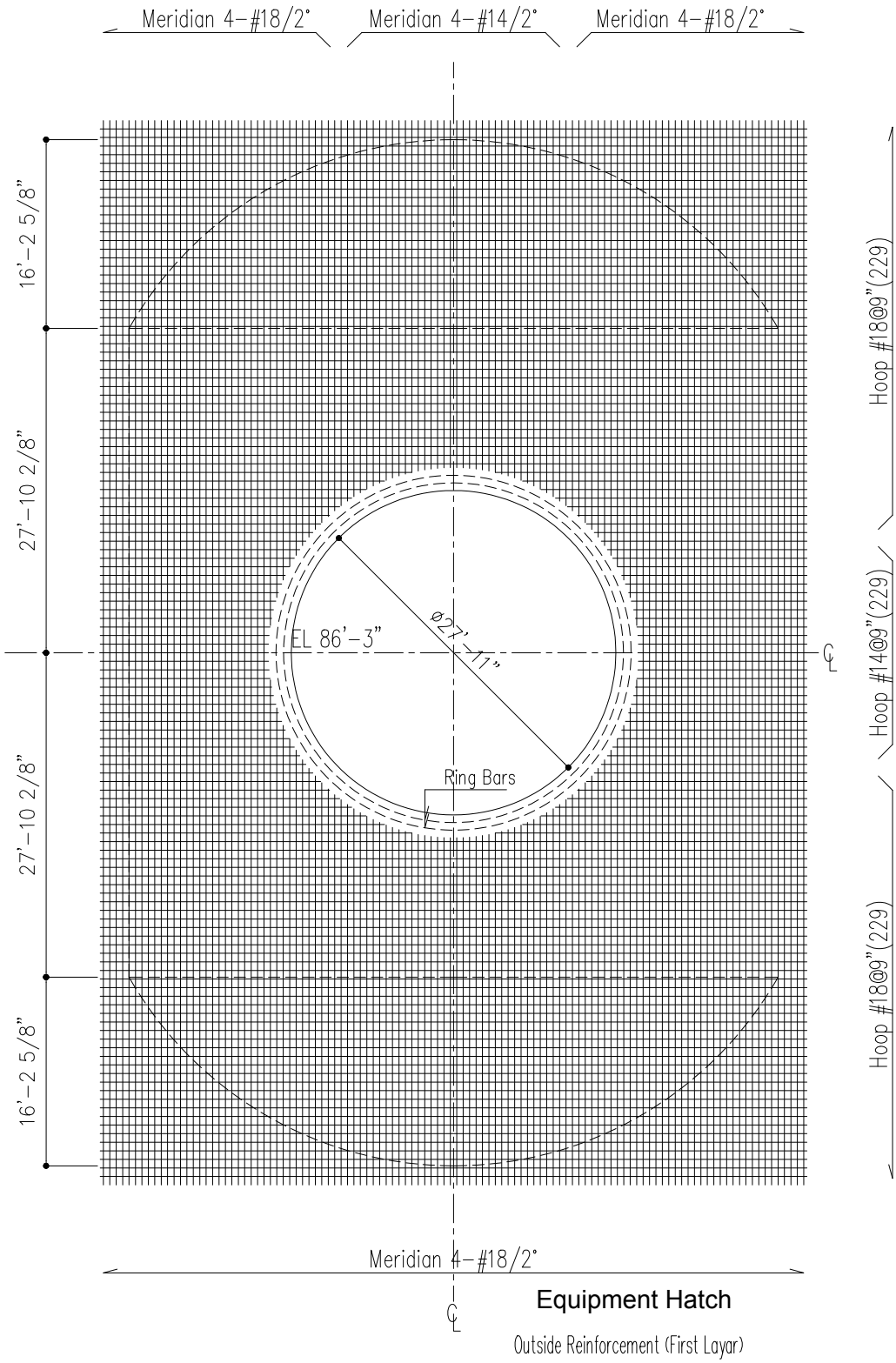

Figure 3.8.1-5 PCCV General Arrangement, Tendons and Reinforcing (Sheet 6 of 16)

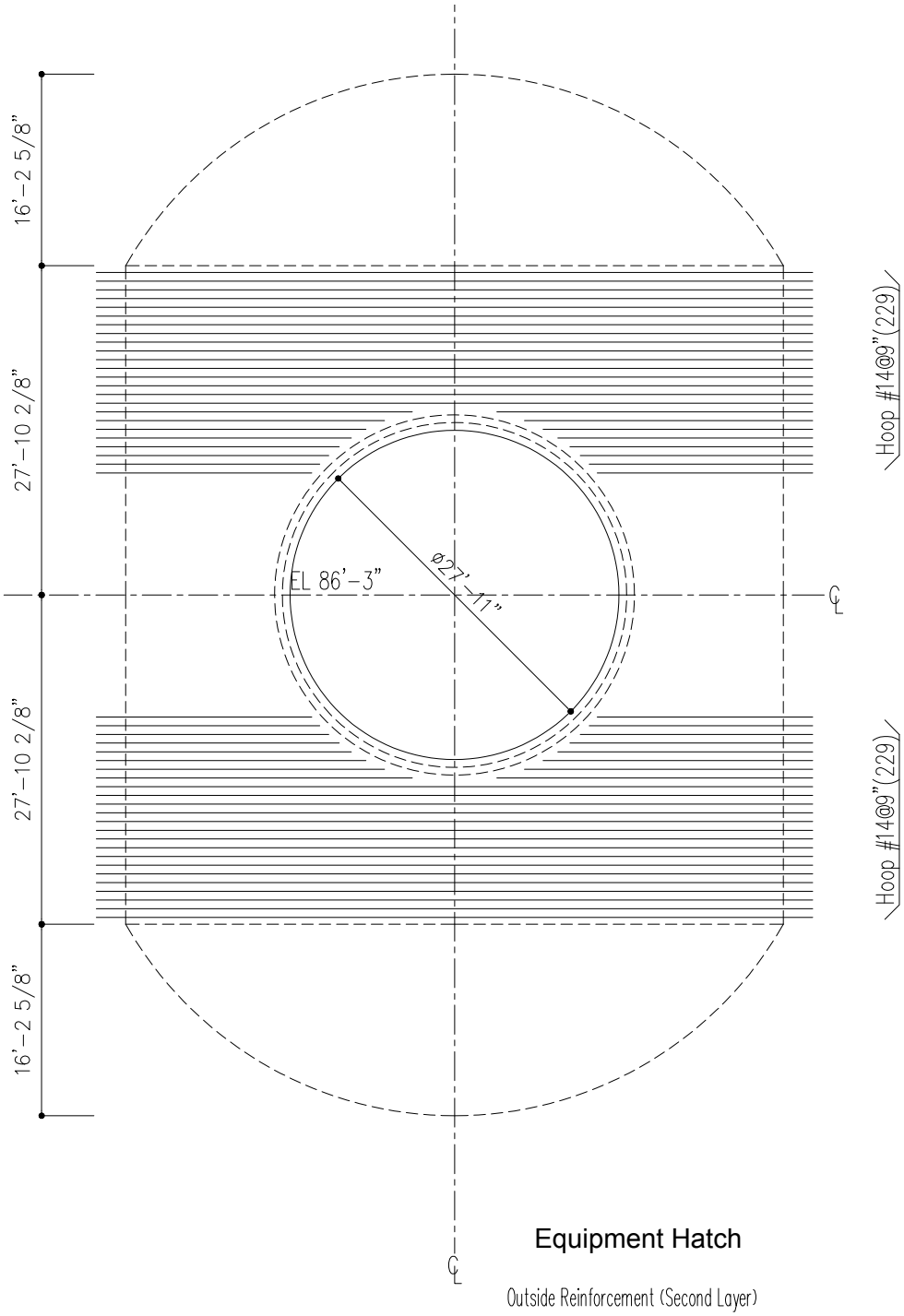

Figure 3.8.1-5 PCCV General Arrangement, Tendons and Reinforcing (Sheet 7 of 16)

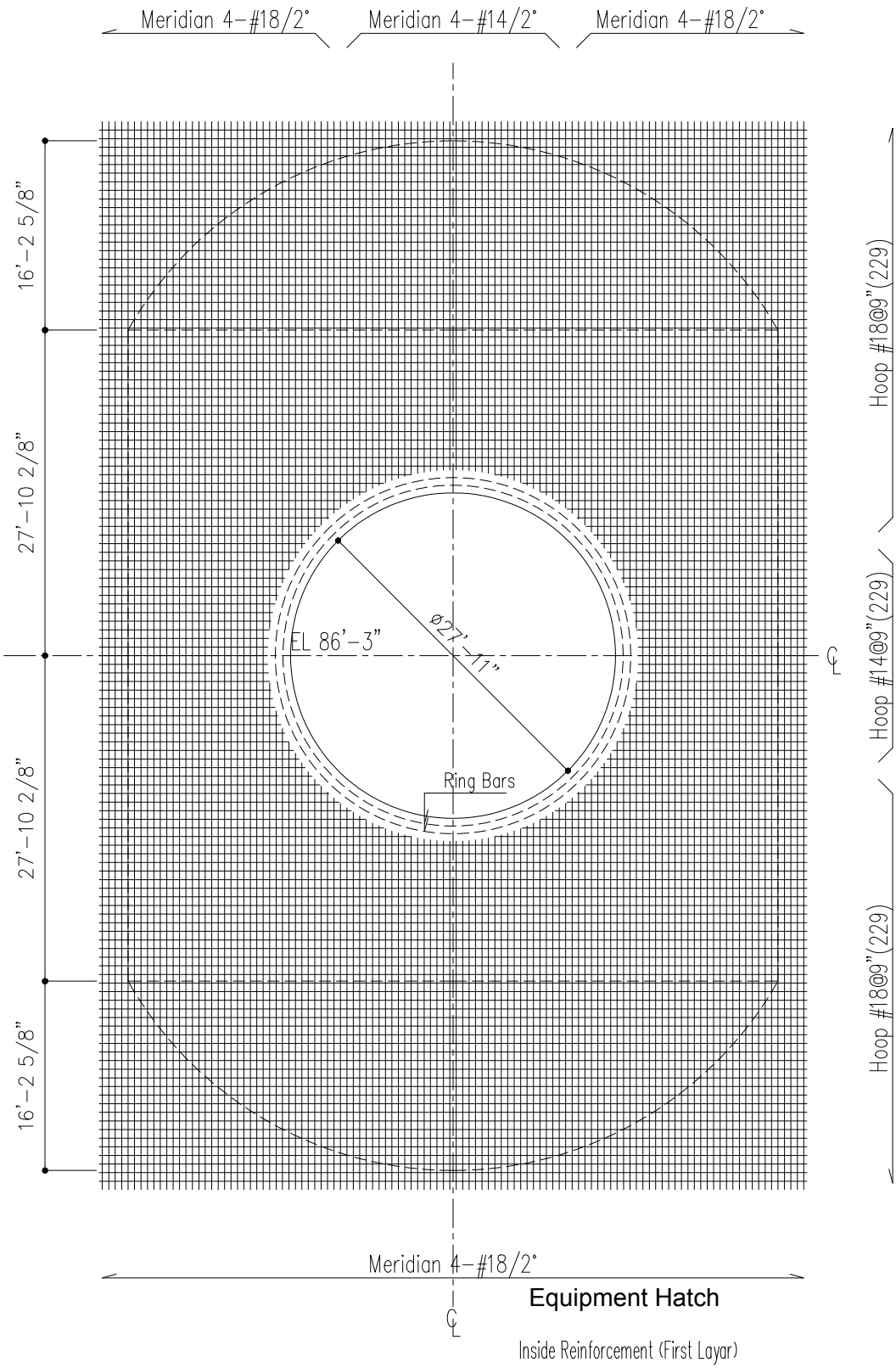

Figure 3.8.1-5 PCCV General Arrangement, Tendons and Reinforcing (Sheet 8 of 16)

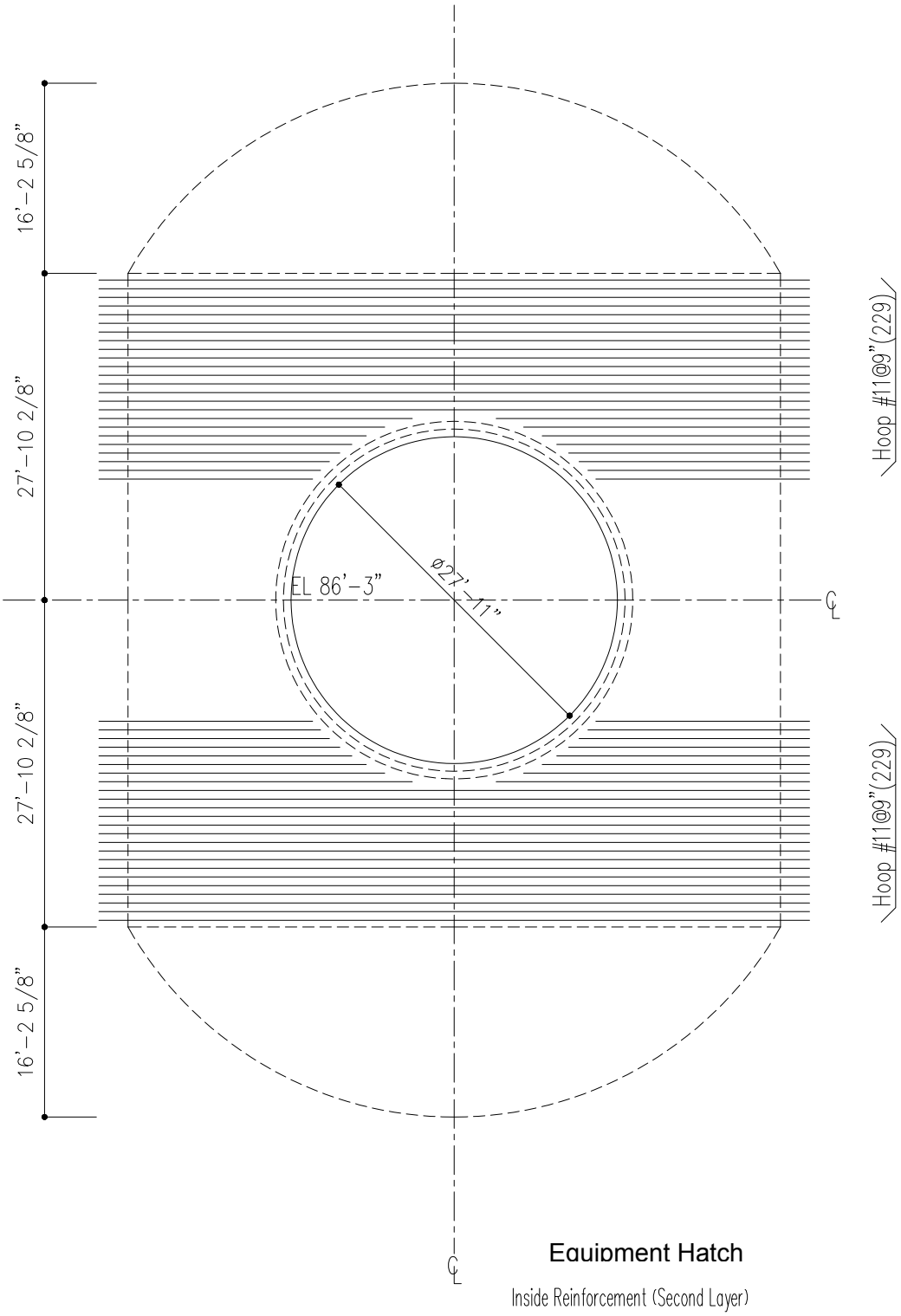

Figure 3.8.1-5 PCCV General Arrangement, Tendons and Reinforcing (Sheet 9 of 16)

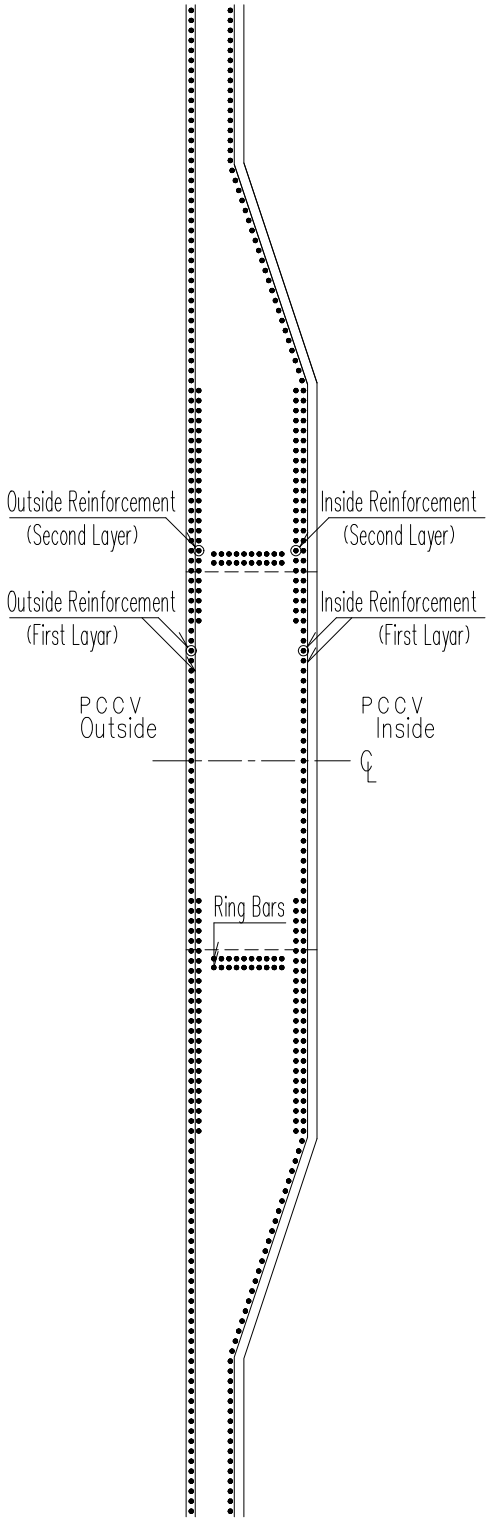

E/H Section

Figure 3.8.1-5 PCCV General Arrangement, Tendons and Reinforcing (Sheet 10 of 16)

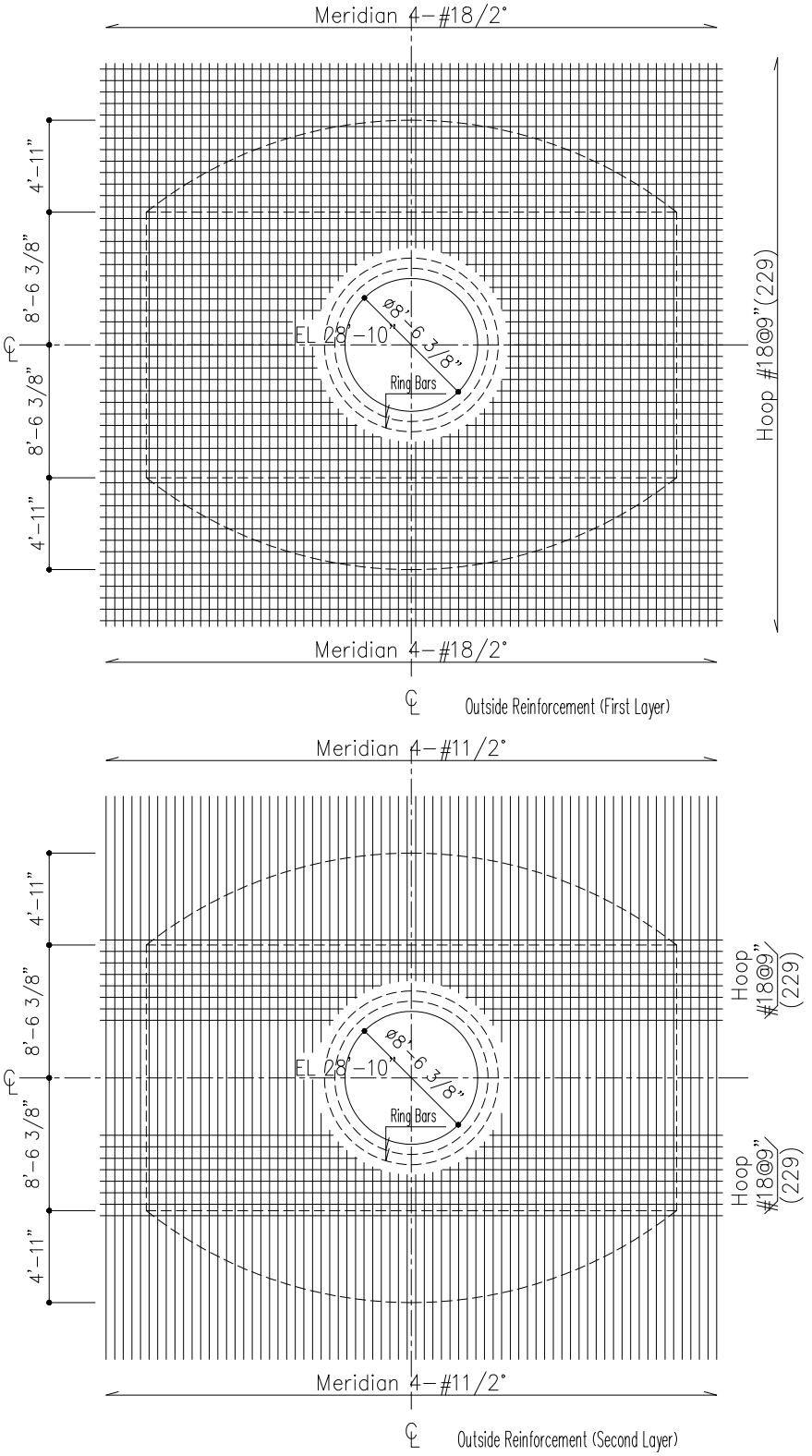

A/L1 OUTSIDE

Figure 3.8.1-5 PCCV General Arrangement, Tendons and Reinforcing (Sheet 11 of 16)

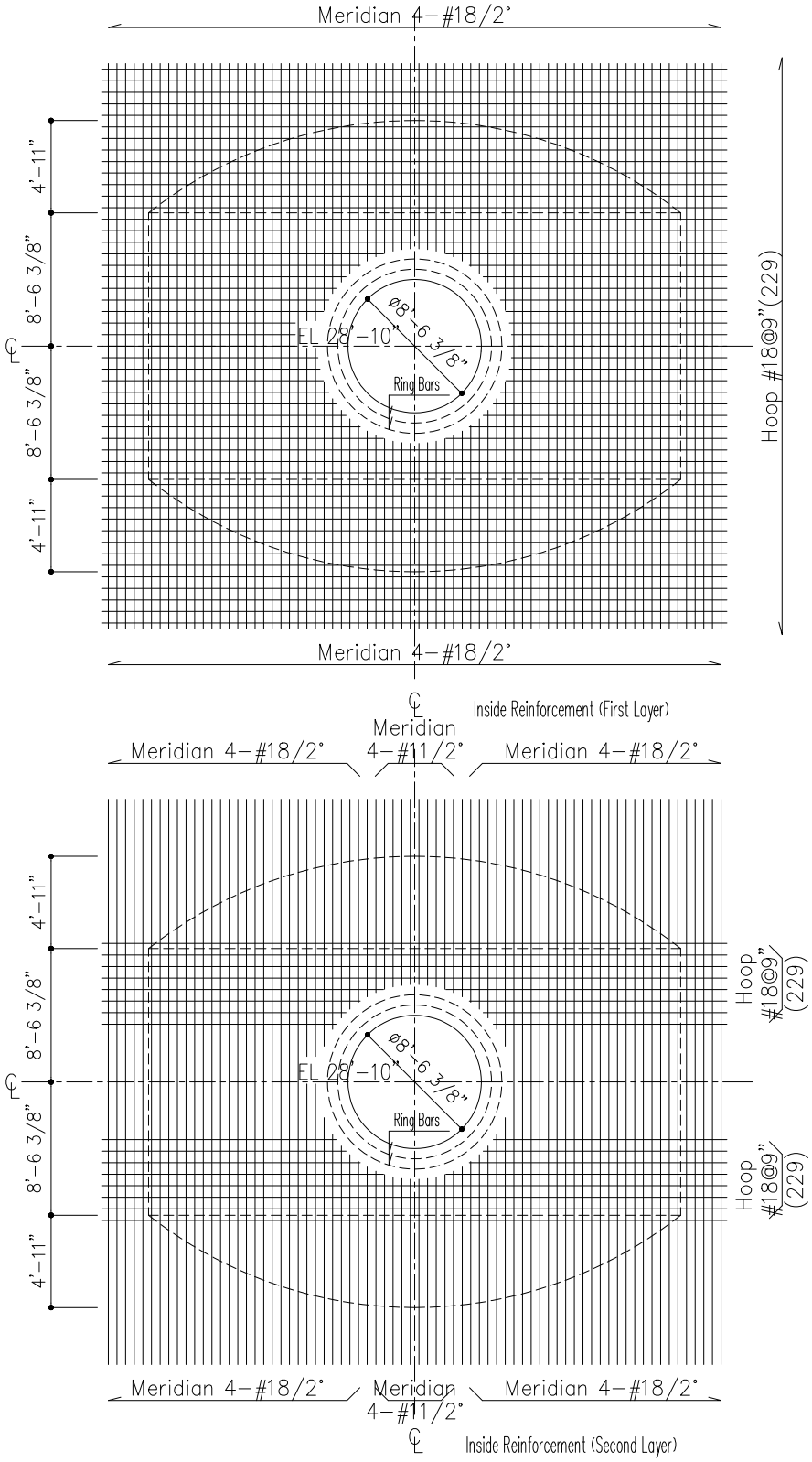

A/L1 INSIDE

Figure 3.8.1-5 PCCV General Arrangement, Tendons and Reinforcing (Sheet 12 of 16)

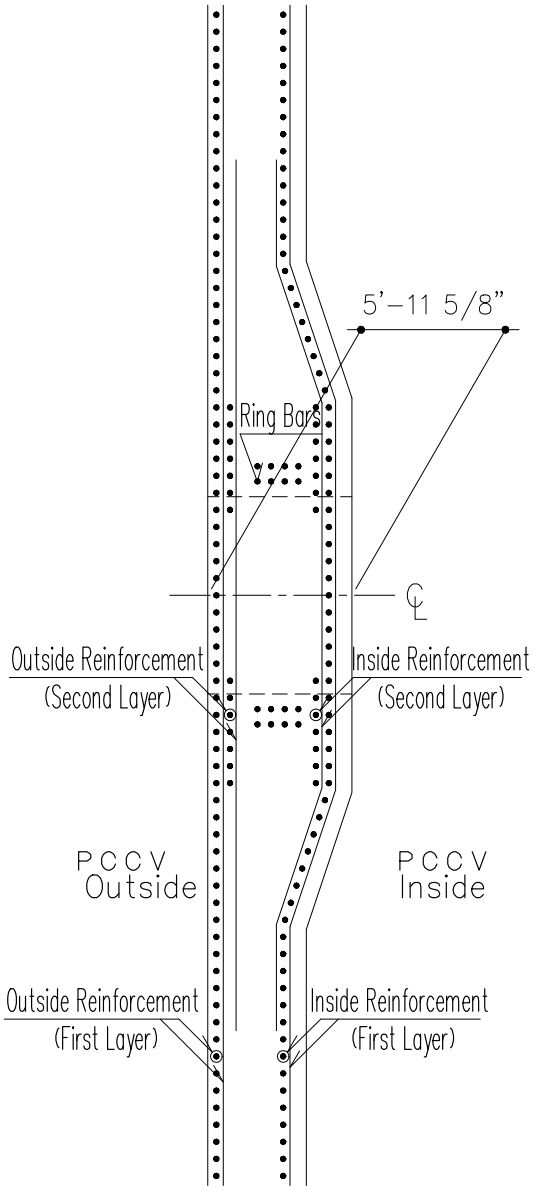

A/L1 Section

Figure 3.8.1-5 PCCV General Arrangement, Tendons and Reinforcing (Sheet 13 of 16)

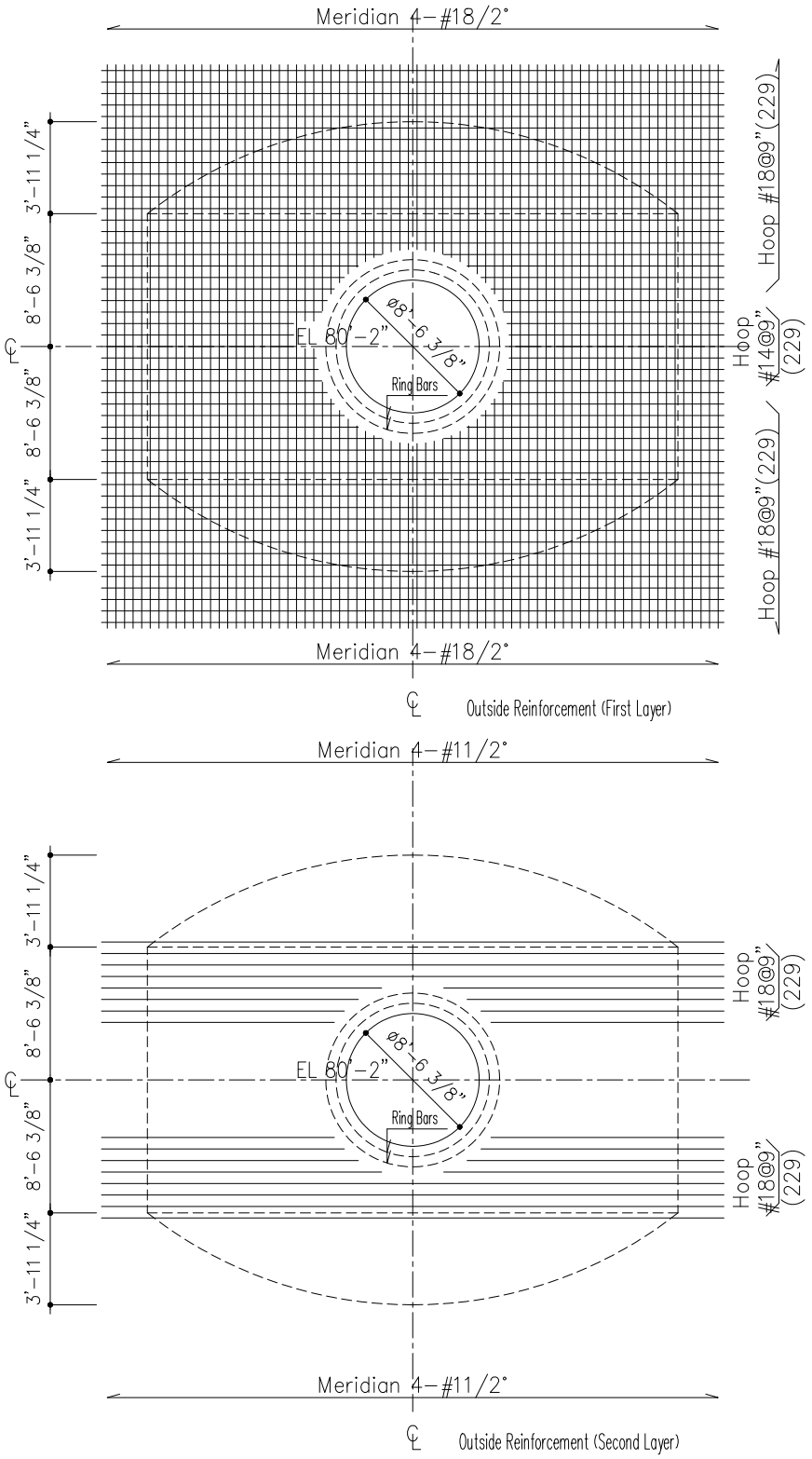

A/L2 OUTSIDE

Figure 3.8.1-5 PCCV General Arrangement, Tendons and Reinforcing (Sheet 14 of 16)

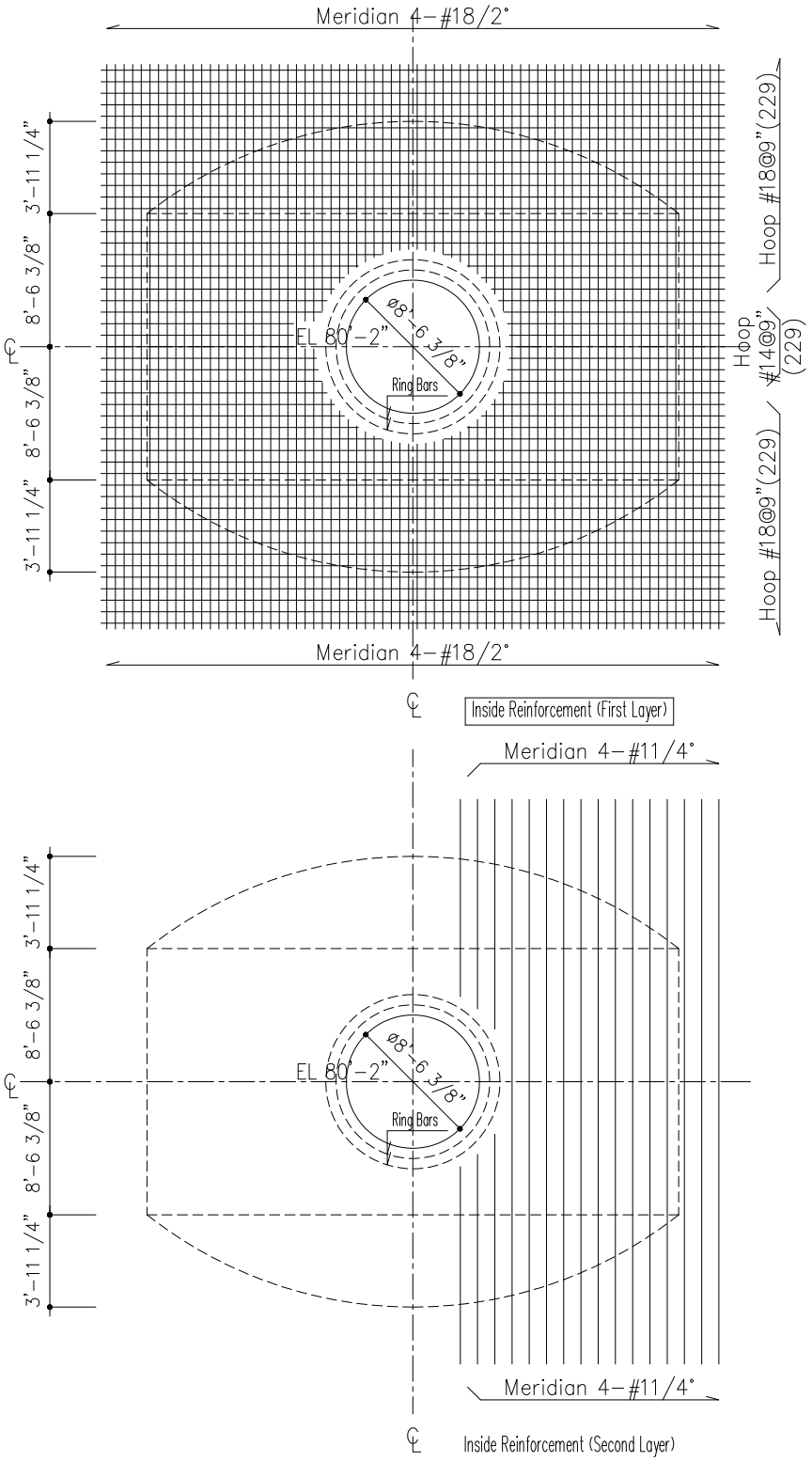

A/L2 INSIDE

Figure 3.8.1-5 PCCV General Arrangement, Tendons and Reinforcing (Sheet 15 of 16)

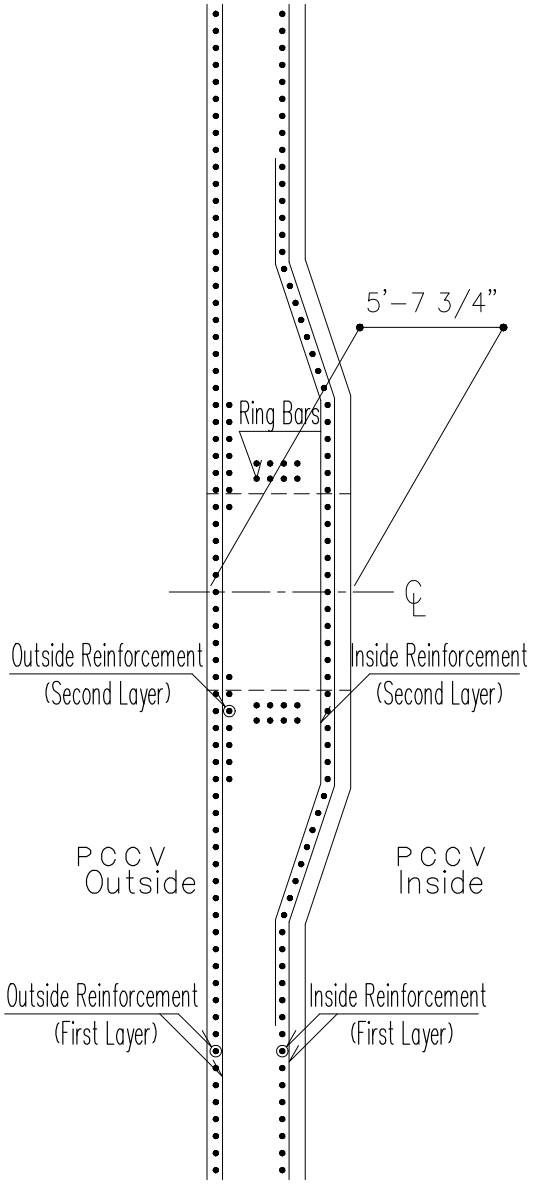

A/L2 Section

Figure 3.8.1-5 PCCV General Arrangement, Tendons and Reinforcing (Sheet 16 of 16)

~~Security Related Information – Withhold Under 10 CFR 2.390~~

Figure 3.8.1-6 Equipment Hatch

~~Security-Related Information – Withhold Under 10 CFR 2.390~~

Figure 3.8.1-7 Personnel Airlock

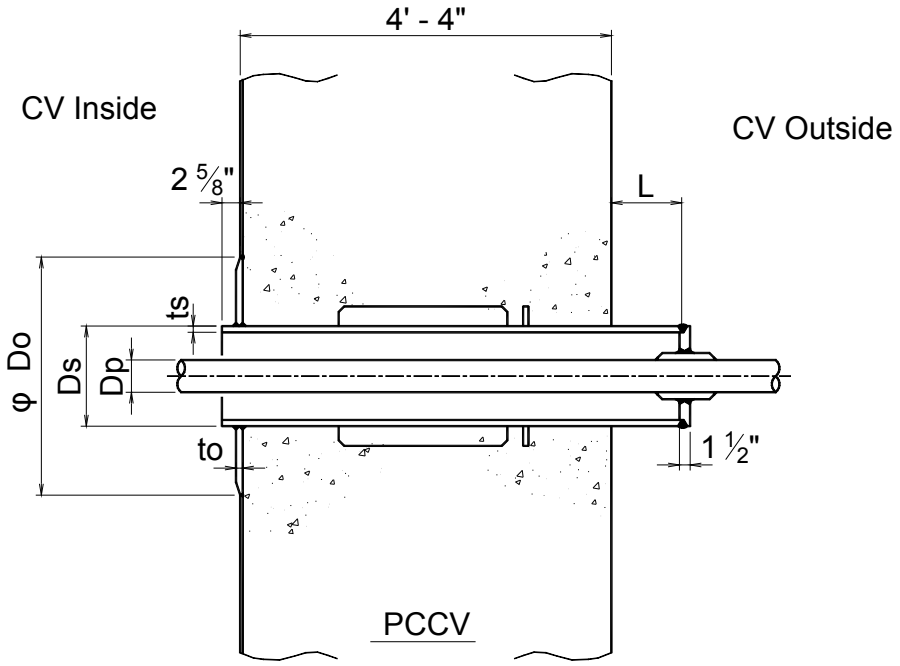

TYPE-1 (Pipe Size=follow 4B)

Ds	ts	Dp	L	Do	to	SLEEVE NO.
6B	1/2"	1-1/2B	7"	11 5/8"	1/2"	P279,P280,P281,P282
		3/4B	7"			P220,P222,P231,P270,P416,P417
		1B	7"			P236,P247,P265,P266
		2B	7"			P207,P230,P245,P253,P284
10B	3/8"	3B	7"	1'-5 1/4"	1/2"	P205,P248,P260,P283
14B	5/8"	4B	7"	1'-8 3/4"	1/2"	P162,P210,P227,P233,P235,P258
						P274,P278
			15"			P277

Figure 3.8.1-8 Containment Penetrations (Sheet 1 of 16)

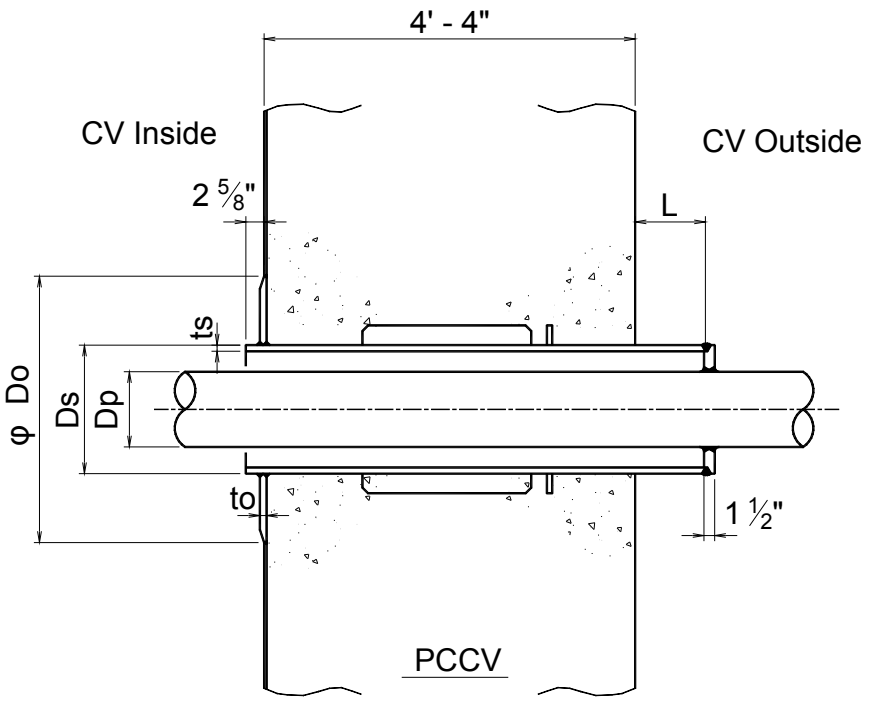

TYPE-2 (Pipe Size=above 6B)

Ds	ts	Dp	L	Do	to	SLEEVE NO.
14B	5/8"	6B	7"	1'-8 3/4"	1/2"	P161,P238
		8B	7"			P214,P224,P232,P234,P249,P250
						P251,P252,P261,P271,P401,P410
			23"			P212,P225,P259,P272
18B	1/2"	10B	7"	2'-1 3/8"	1/2"	P408,P409
			23"			P209,P226,P257,P273

Figure 3.8.1-8 Containment Penetrations (Sheet 2 of 16)

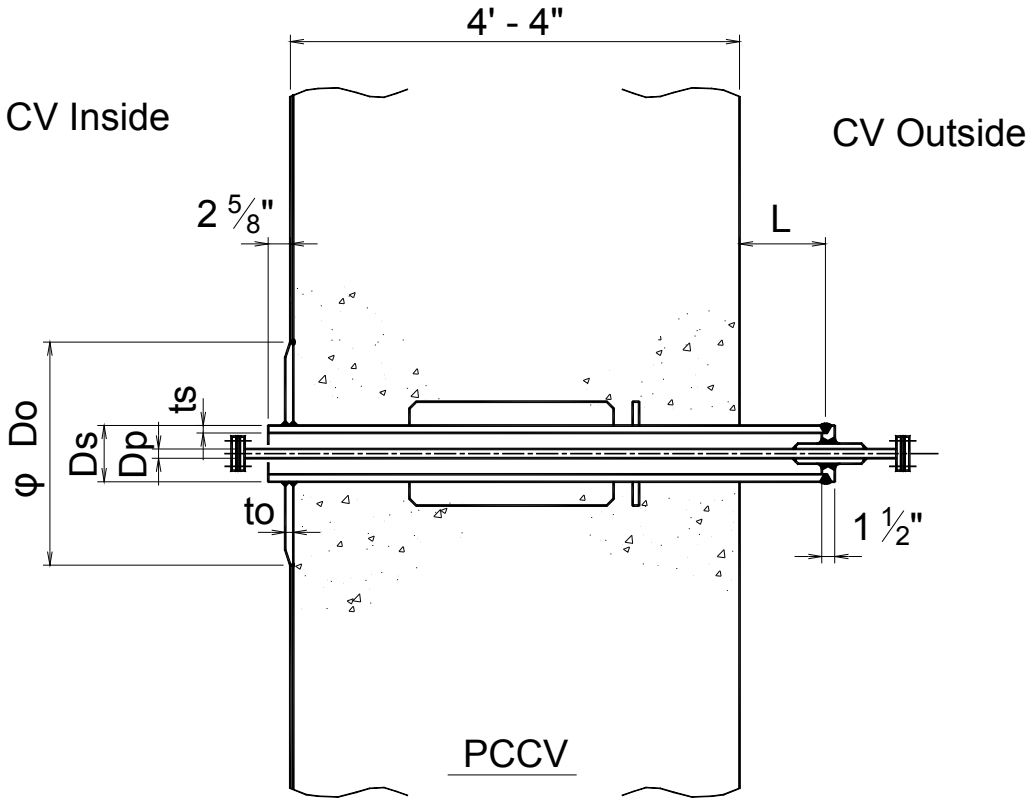

TYPE-3

Ds	ts	Dp	L	Do	to	SLEEVE NO.
6B	1/2"	3/4B	7"	11 5/8"	1/2"	P223

Figure 3.8.1-8 Containment Penetrations (Sheet 3 of 16)

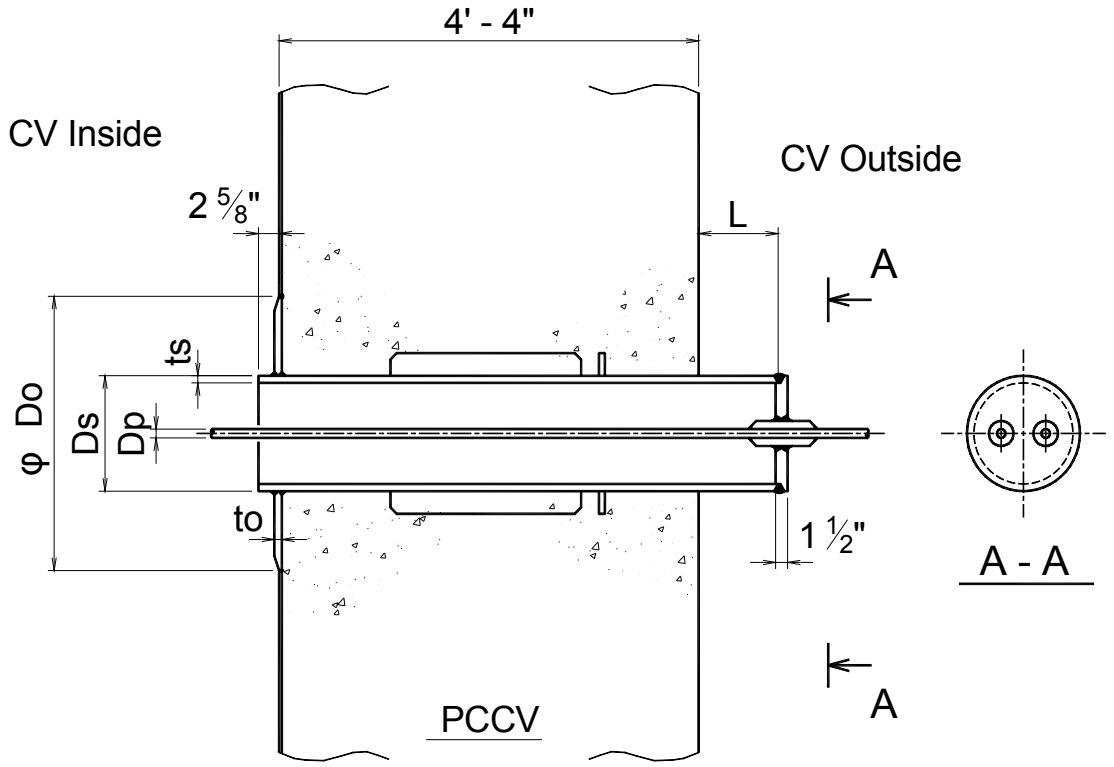

TYPE-4

Ds	ts	Dp	L	Do	to	SLEEVE NO.
14B	5/8"	3/4B	7"	1'-8 3/4"	1/2"	P262
			15"			P237,P239,P276
			23"			P267,P269

Figure 3.8.1-8 Containment Penetrations (Sheet 4 of 16)

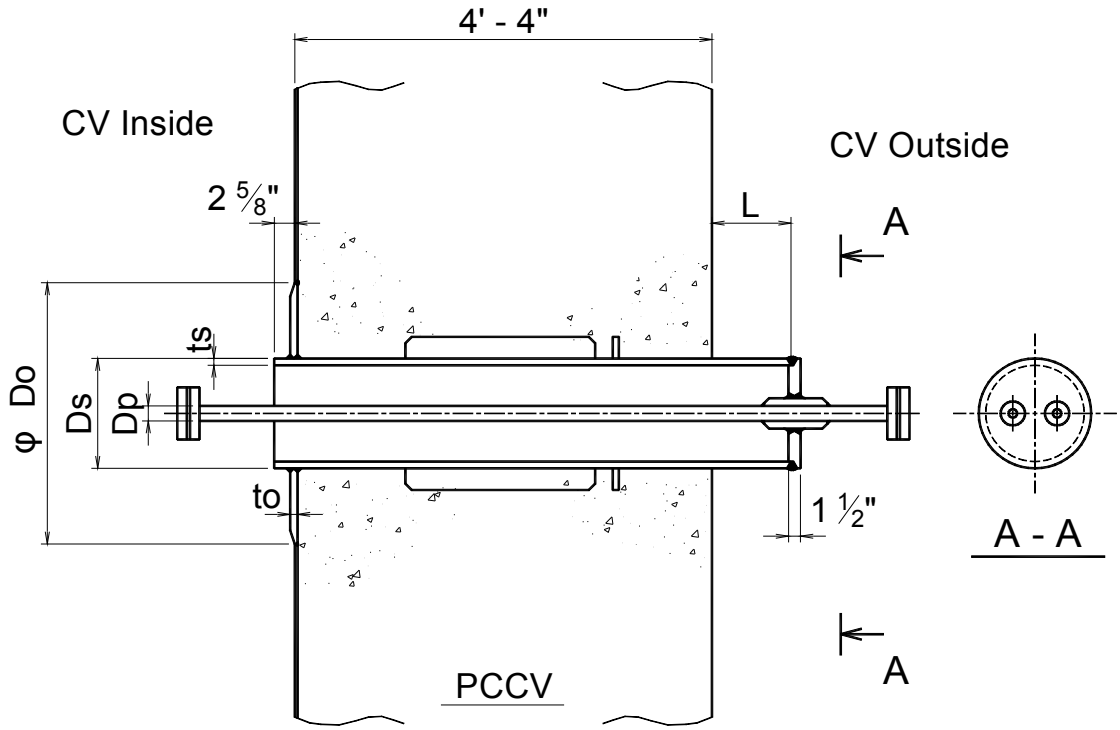

TYPE-5

Ds	ts	Dp	L	Do	to	SLEEVE NO.
14B	5/8"	3/4B	7"	1'-8 3/4"	1/2"	P405
		1-1/2B	7"			P418

Figure 3.8.1-8 Containment Penetrations (Sheet 5 of 16)

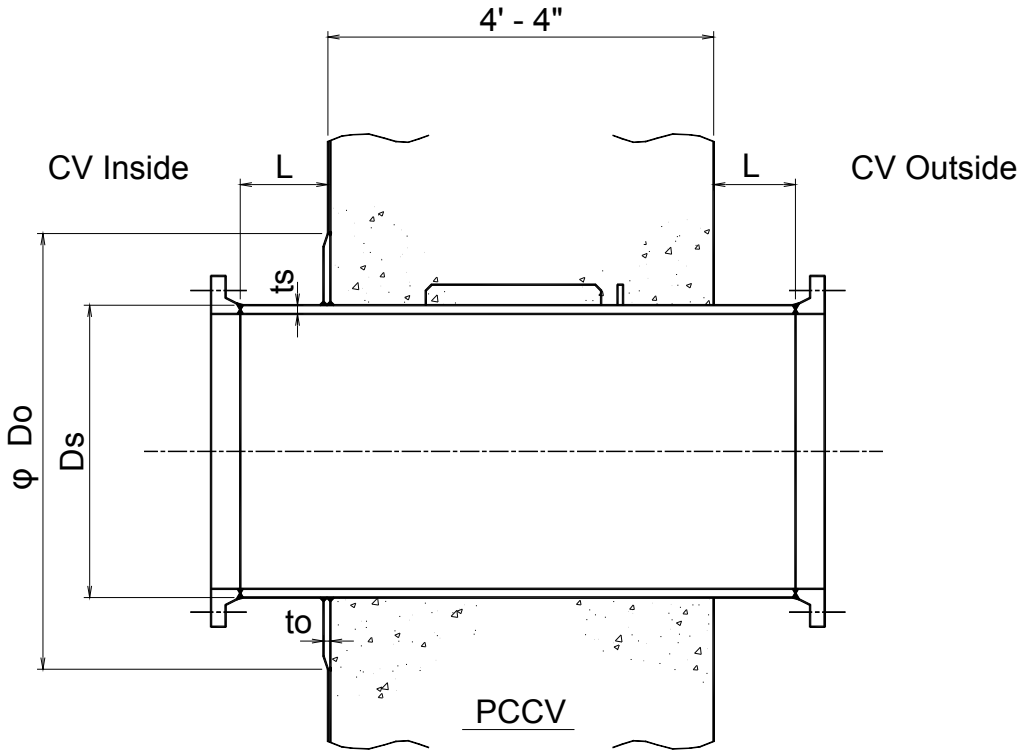

TYPE-8

Ds	ts	L	Do	to	SLEEVE NO.
36B	5/8"	15"	3'-7 3/8"	1/2"	P451,P452

Figure 3.8.1-8 Containment Penetrations (Sheet 6 of 16)

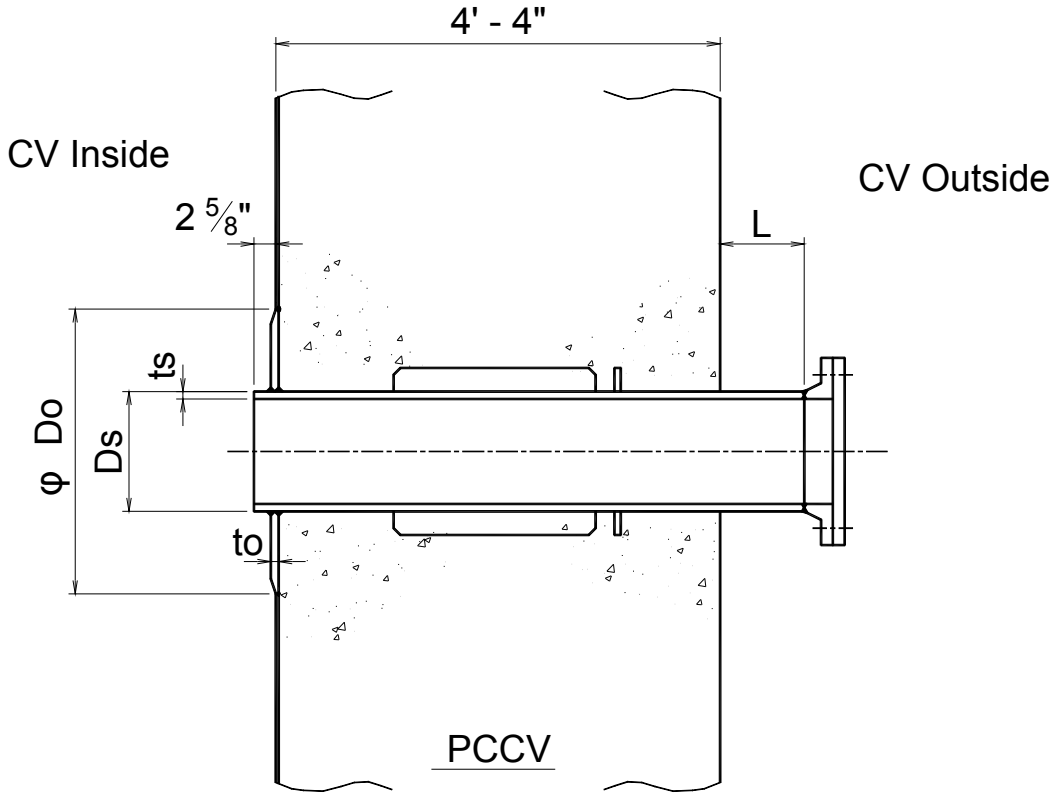

TYPE-9

Ds	ts	L	Do	to	SLEEVE NO.
6B	1/2"	7"	11 5/8"	1/2"	P301
12B	5/8"	7"	1'-7 1/4"	1/2"	P216,P218
14B	5/8"	7"	1'-8 3/4"	1/2"	P419,P420

Figure 3.8.1-8 Containment Penetrations (Sheet 7 of 16)

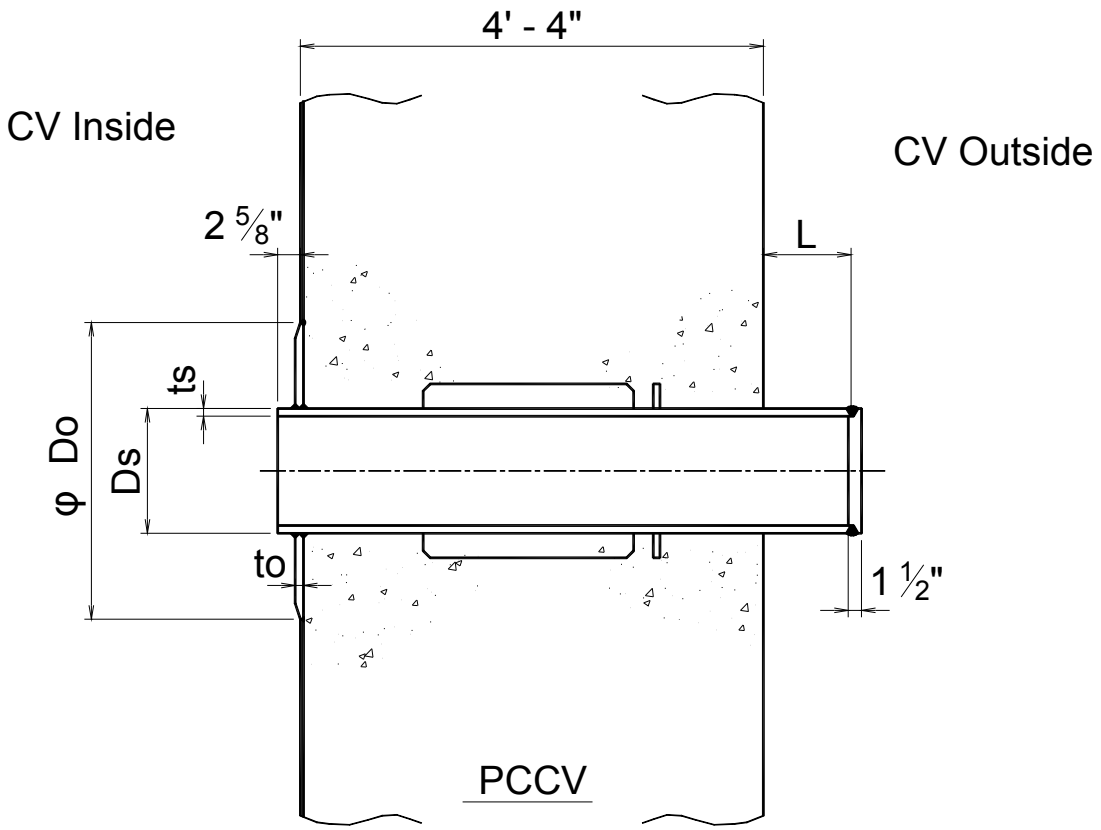

TYPE-10

Ds	ts	L	Do	to	SLEEVE NO.
14B	5/8"	24"	1'-8 3/4"	1/2"	P208,P213,P215,P246,P254,P268
					P275,P285,P406,P407

Figure 3.8.1-8 Containment Penetrations (Sheet 8 of 16)

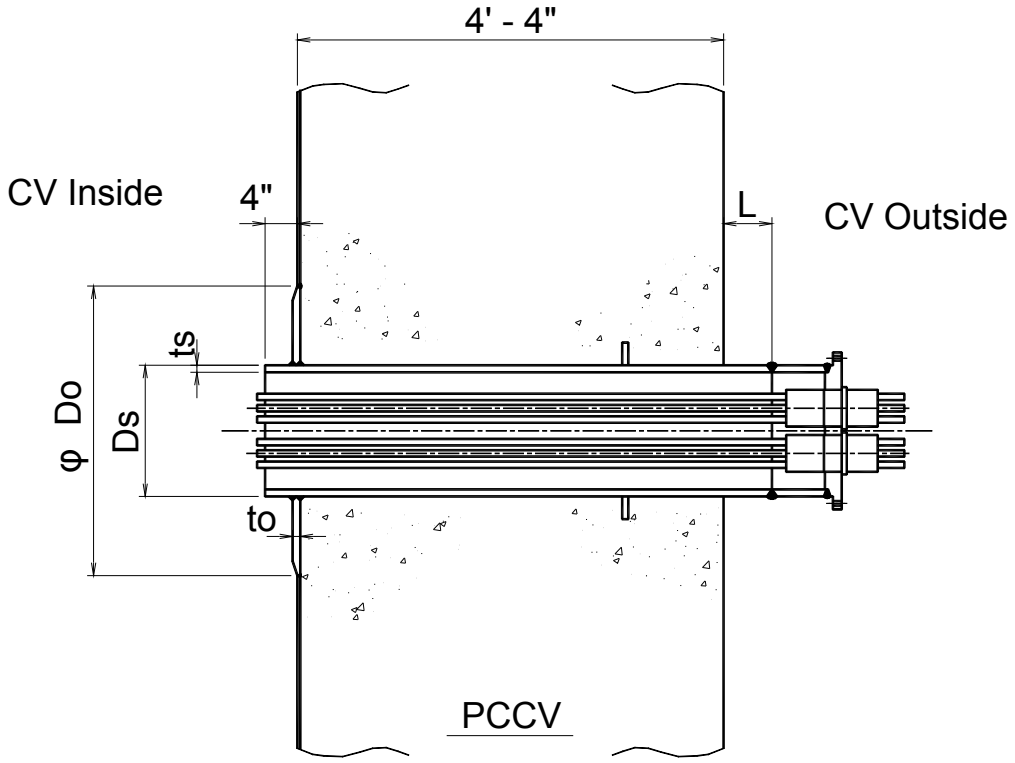

TYPE-11

Ds	ts	L	Do	to	SLEEVE NO.
12B	5/8"	6"	1'-7 1/4"	1/2"	E606,E607,E608,E609,E610,E612,E613,E615
					E616,E620,E621,E623,E624,E626,E627,E629
					E630,E632,E633,E635,E654,E655,E656,E657
					E663,E664,E665,E667,E703,E704,E710,E711
		8"			E701,E702,E709,E712
16B	3/4"	6"	1'-11 3/8"	1/2"	E602,E604,E611,E614,E617,E622,E625,E628
					E631,E636,E651,E661,E666,E668
		8"			E634,E637,E650,E653

Figure 3.8.1-8 Containment Penetrations (Sheet 9 of 16)

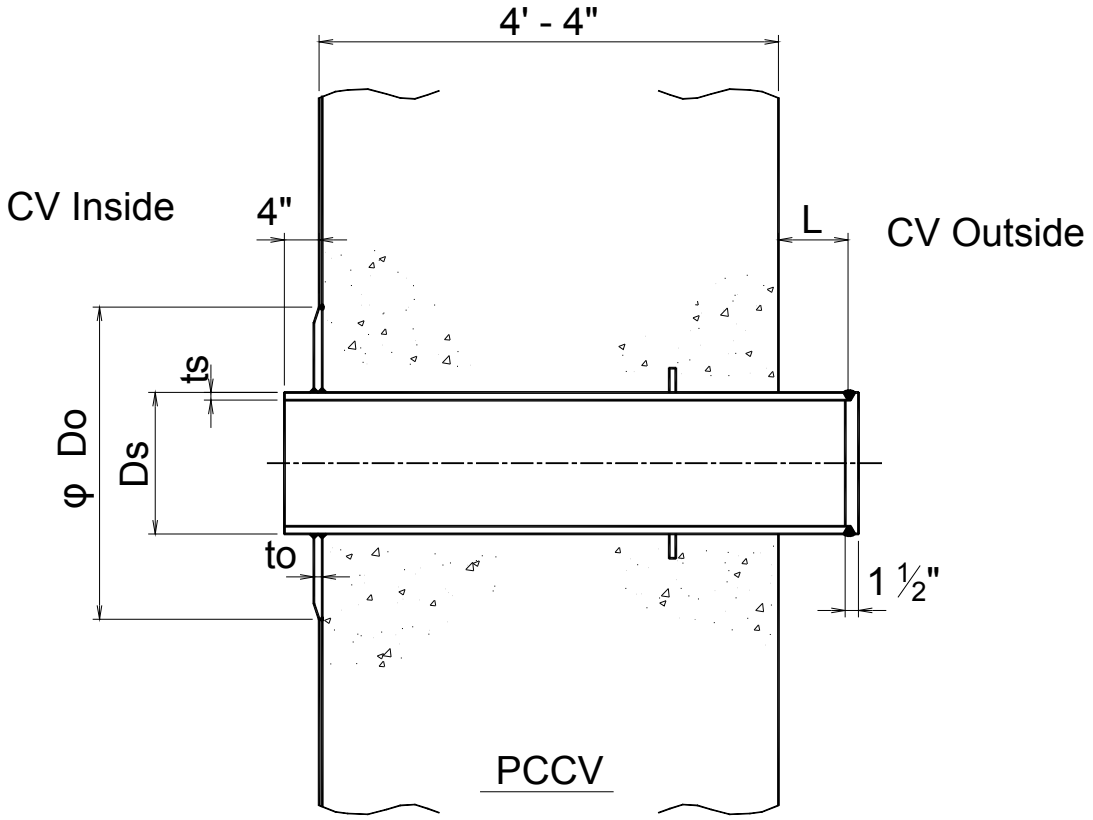

TYPE-12

Ds	ts	L	Do	to	SLEEVE NO.
12B	5/8"	6"	1'-7 1/4"	1/2"	E603,E605,E639,E652
		8"			E662
16B	3/4"	6"	1'-11 3/8"	1/2"	E601,E638,E658

Figure 3.8.1-8 Containment Penetrations (Sheet 10 of 16)

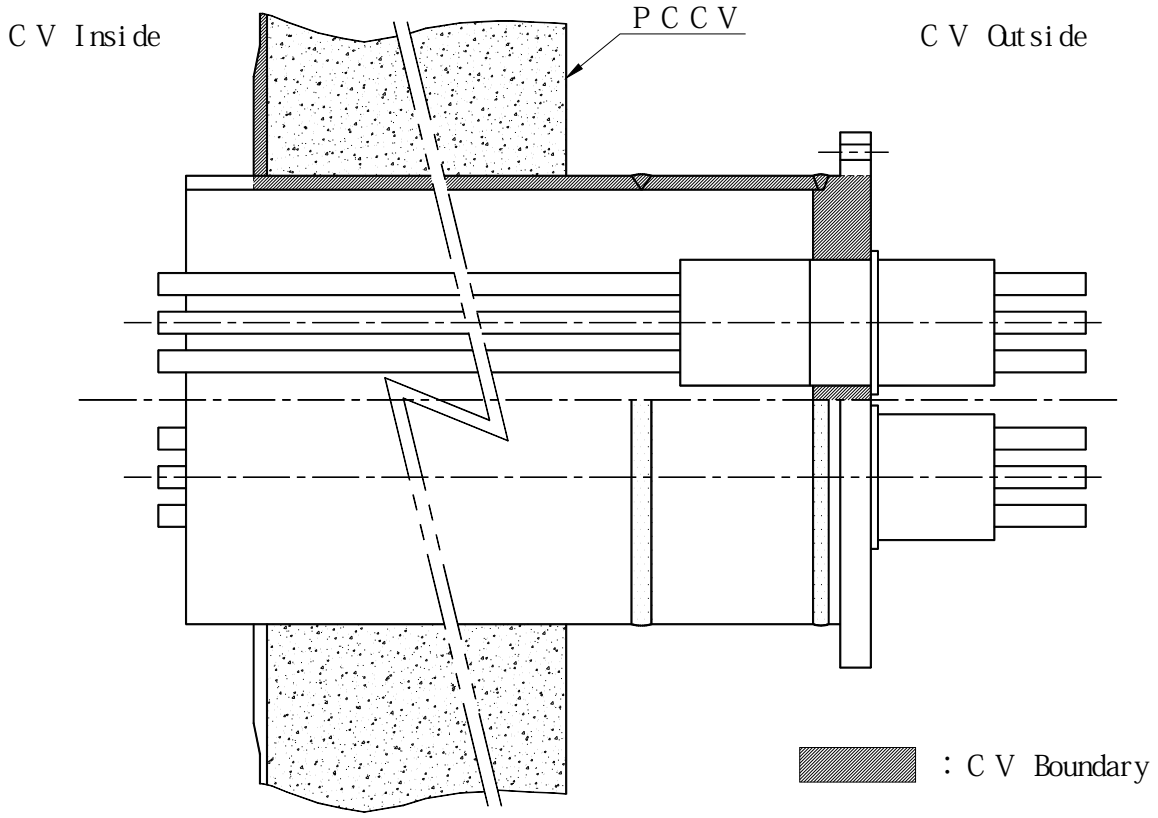

Typical Electrical Penetration Detail

Figure 3.8.1-8 Containment Penetrations (Sheet 11 of 16)

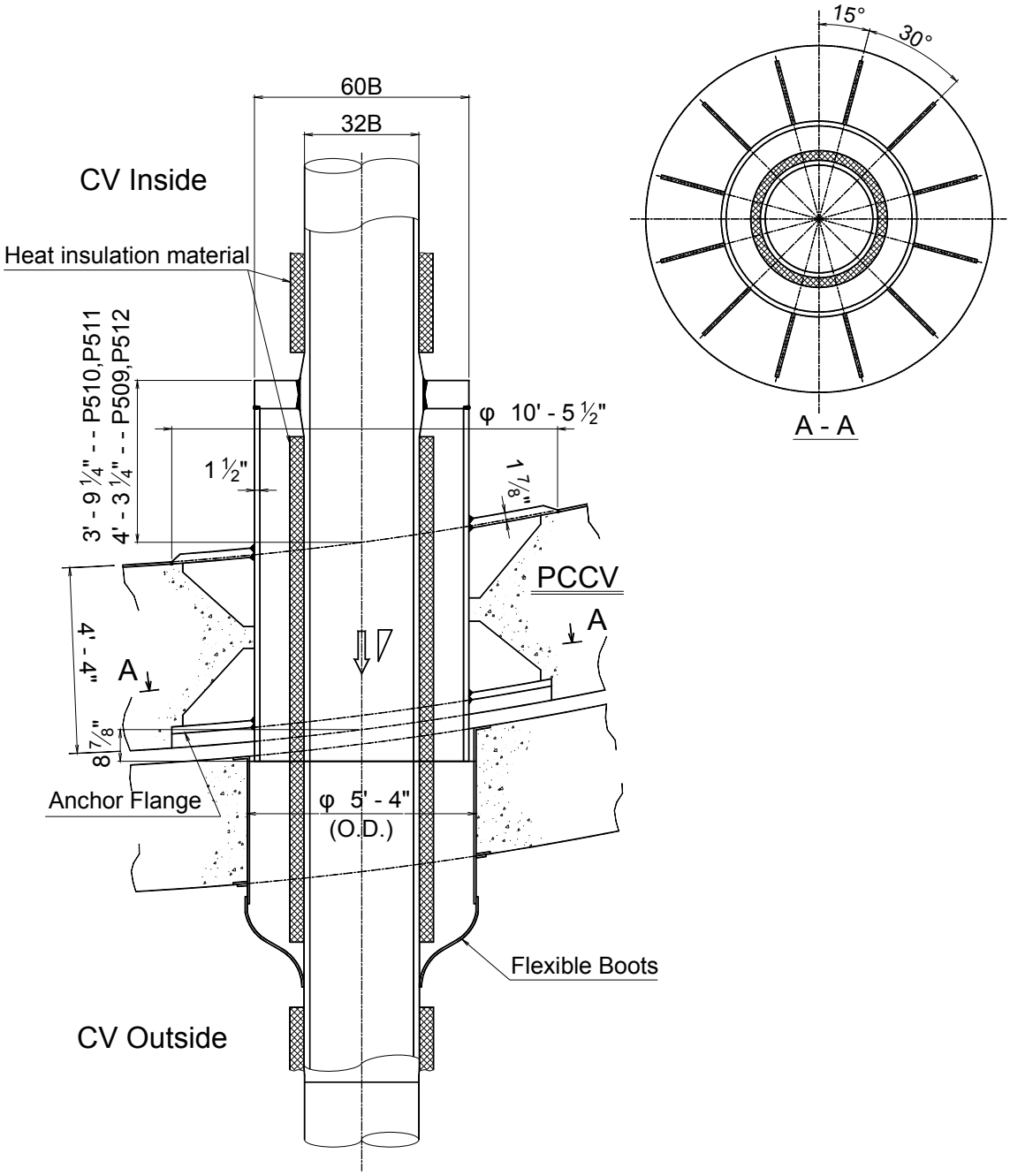

P509 ~ P512

(Main Steam)

Figure 3.8.1-8 Containment Penetrations (Sheet 12 of 16)

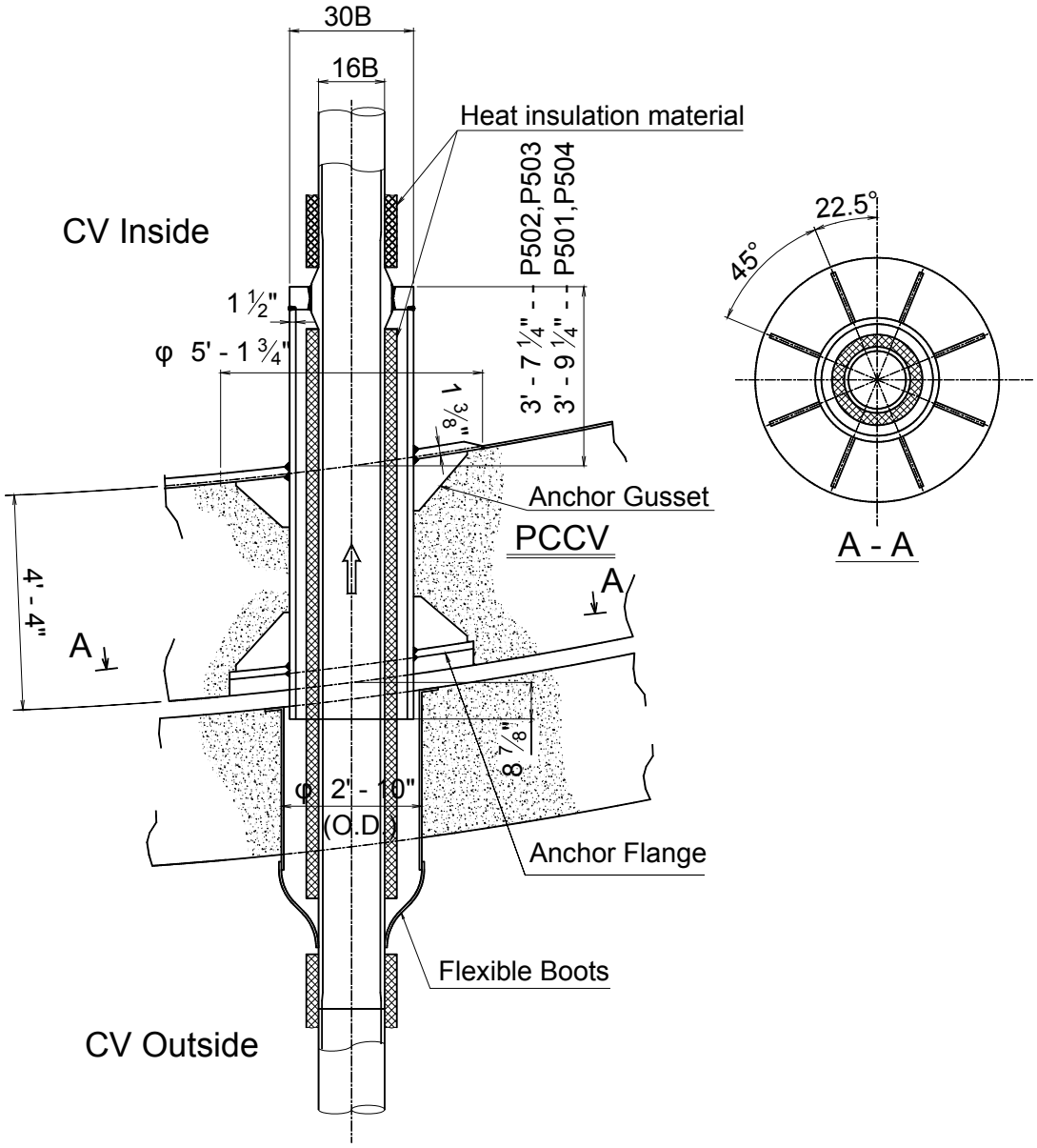

P501 ~ P504

(Feedwater)

Figure 3.8.1-8 Containment Penetrations (Sheet 13 of 16)

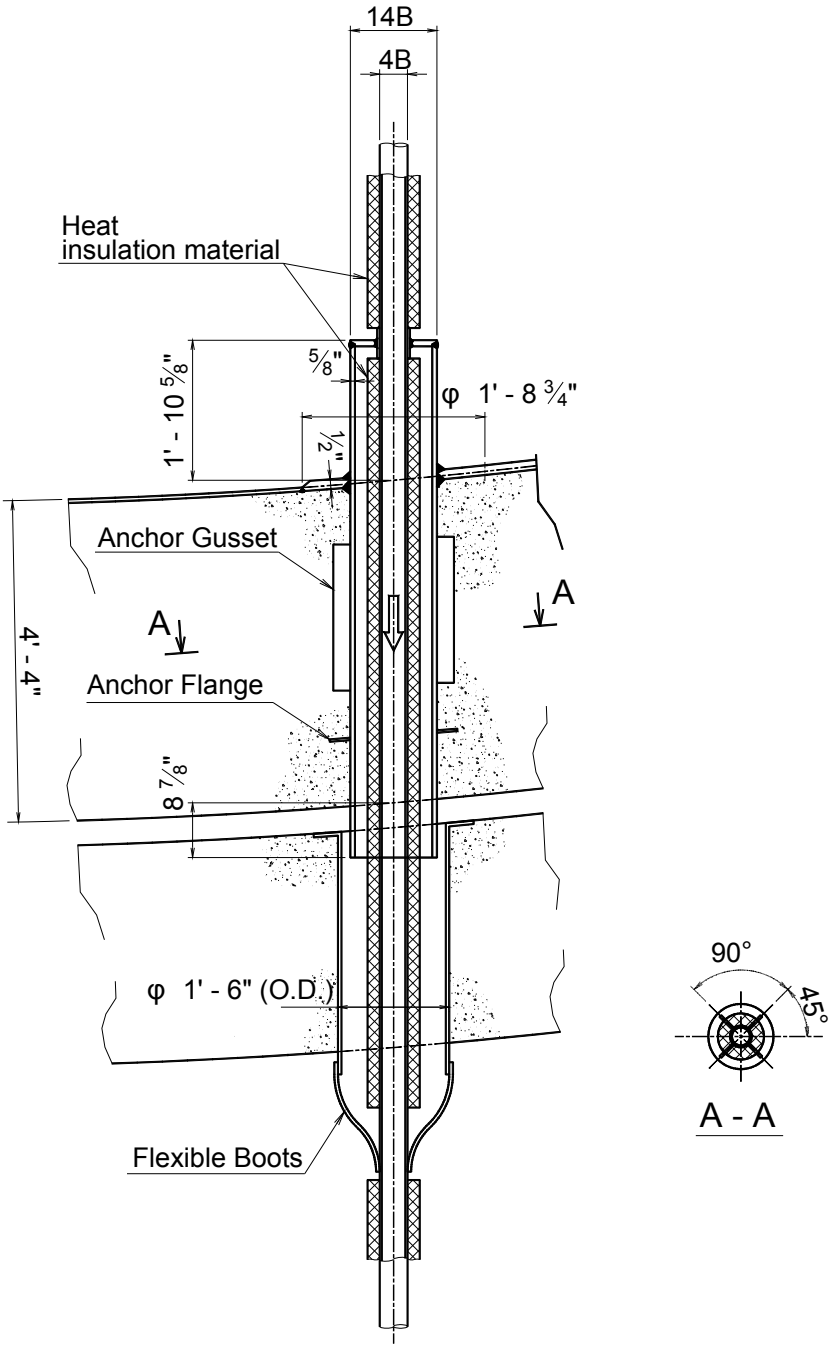

P505 ~ P508

(SG Blowdown)

Figure 3.8.1-8 Containment Penetrations (Sheet 14 of 16)

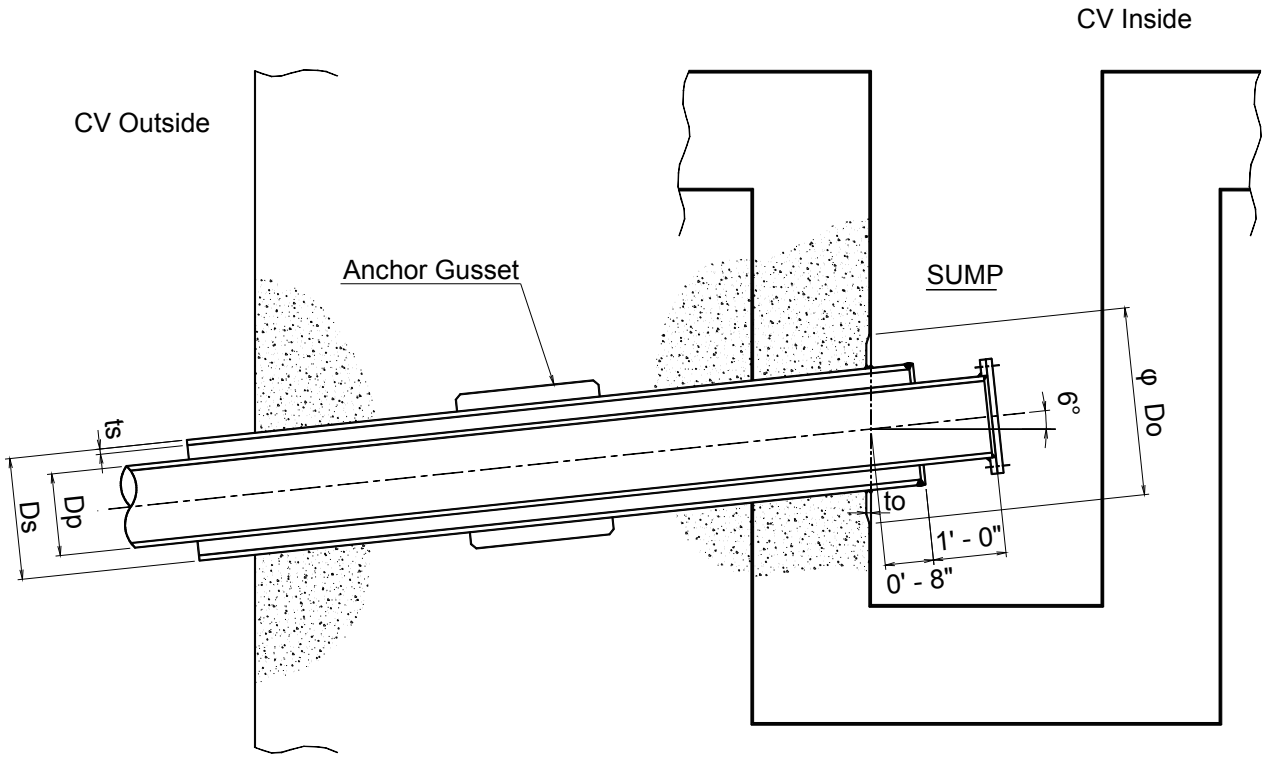

P151 ~ P158

Ds	ts	Dp	Do	to	SLEEVE NO.
18B	1/2"	10B	2'-1 3/8"	1/2"	P152,P153,P156,P157
22B	1/2"	14B	2'-5 3/8"	1/2"	P151,P154,P155,P158

Figure 3.8.1-8 Containment Penetrations (Sheet 15 of 16)

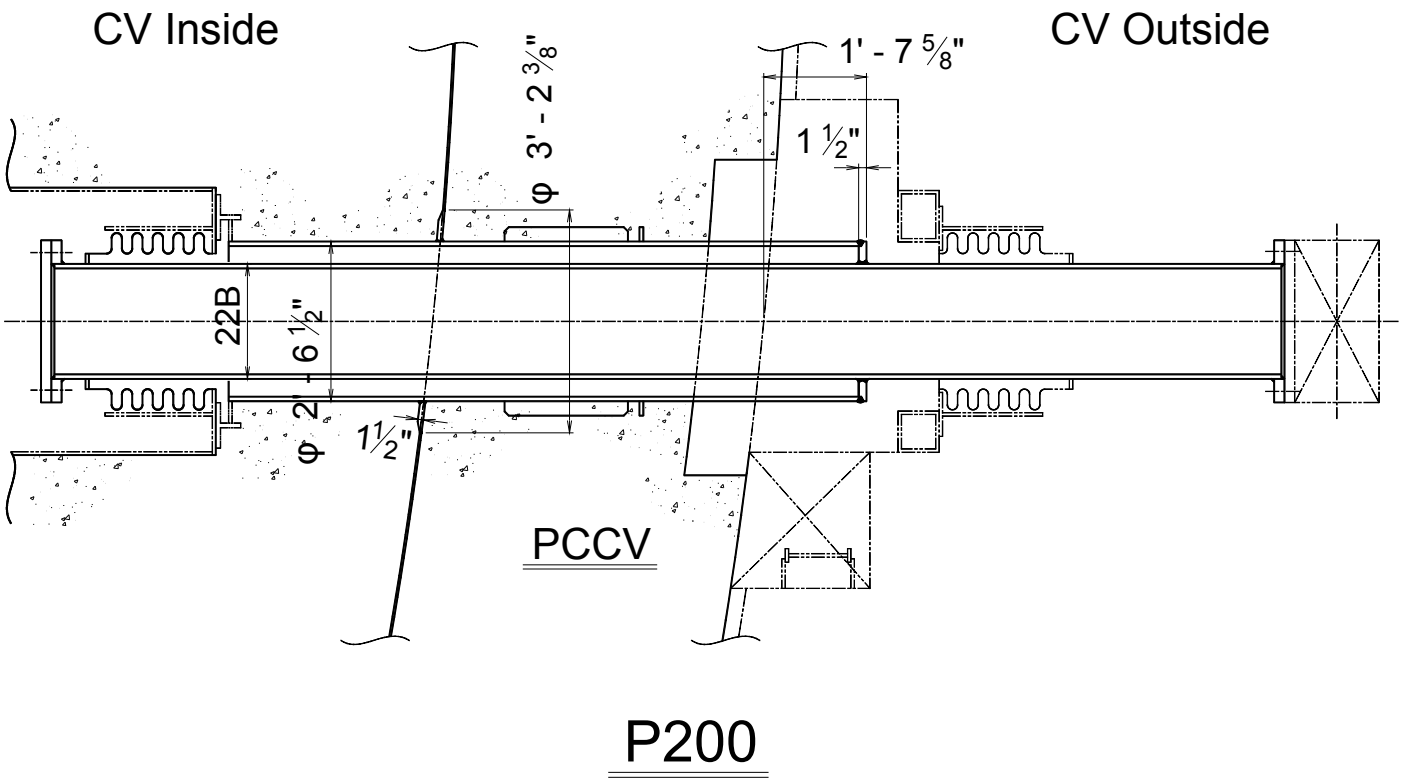

Figure 3.8.1-8 Containment Penetrations (Sheet 16 of 16)

~~Security-Related Information – Withhold Under 10 CFR 2.390~~

Figure 3.8.1-9 Identification of Areas for Temperature Gradients in Table 3.8.1-3 (Sheet 1 of 4)

~~Security-Related Information – Withhold Under 10 CFR 2.390~~

Figure 3.8.1-9 Identification of Areas for Temperature Gradients in Table 3.8.1-3 (Sheet 2 of 4)

~~Security-Related Information – Withhold Under 10 CFR 2.390~~

Figure 3.8.1-9 Identification of Areas for Temperature Gradients in Table 3.8.1-3 (Sheet 3 of 4)

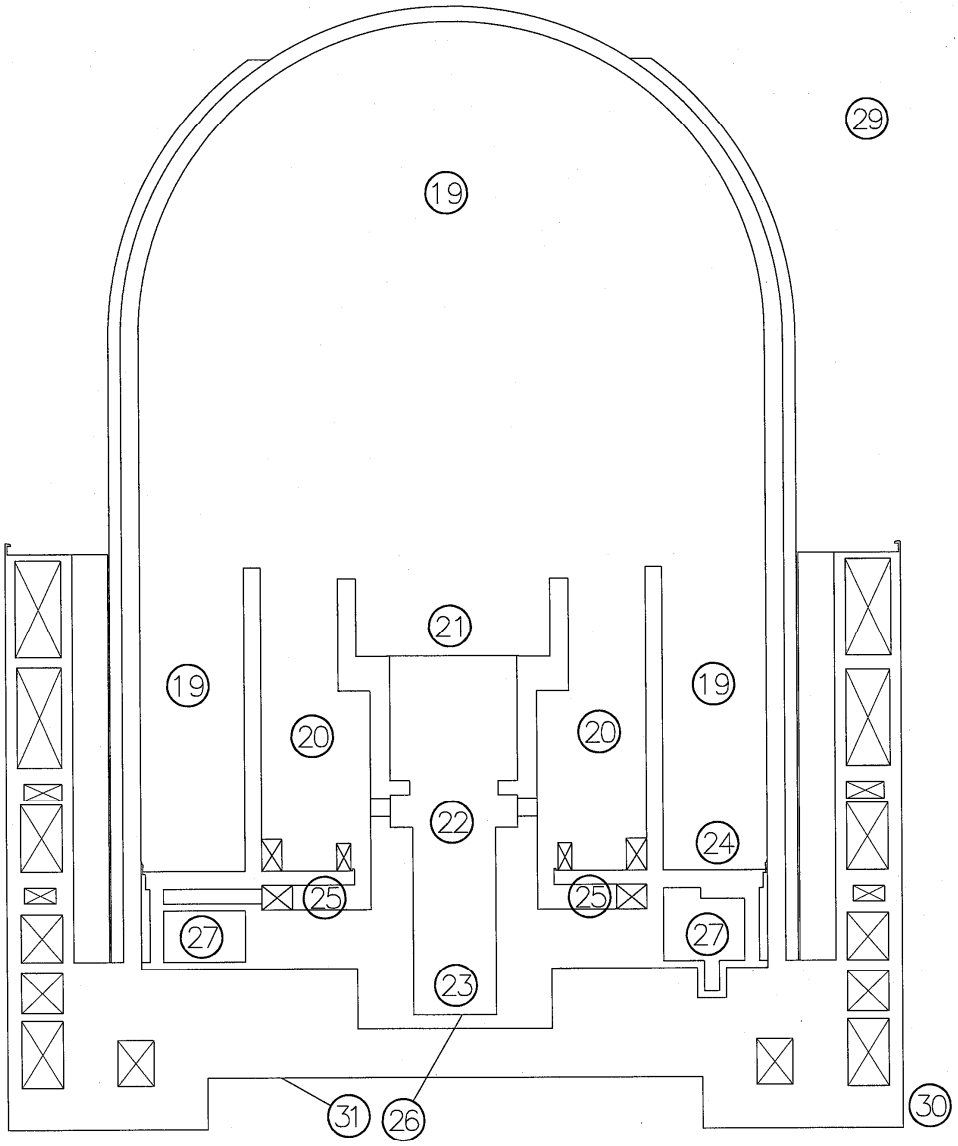

Cross Section (E–W)

Explanation drawing of temperature conditions

Figure 3.8.1-9 Identification of Areas for Temperature Gradients in Table 3.8.1-3 (Sheet 4 of 4)

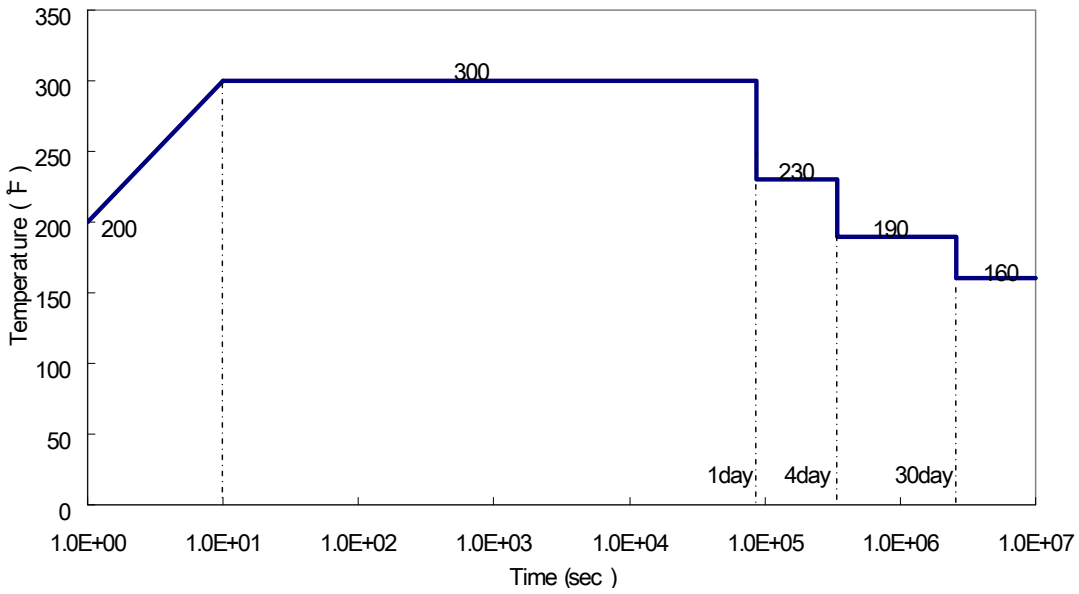

Note: In the temperature distribution analyses, temperature during normal operation is used as initial temperature.

Figure 3.8.1-10 Transient Conditions of PCCV Atmosphere Temperature (Accident Condition)

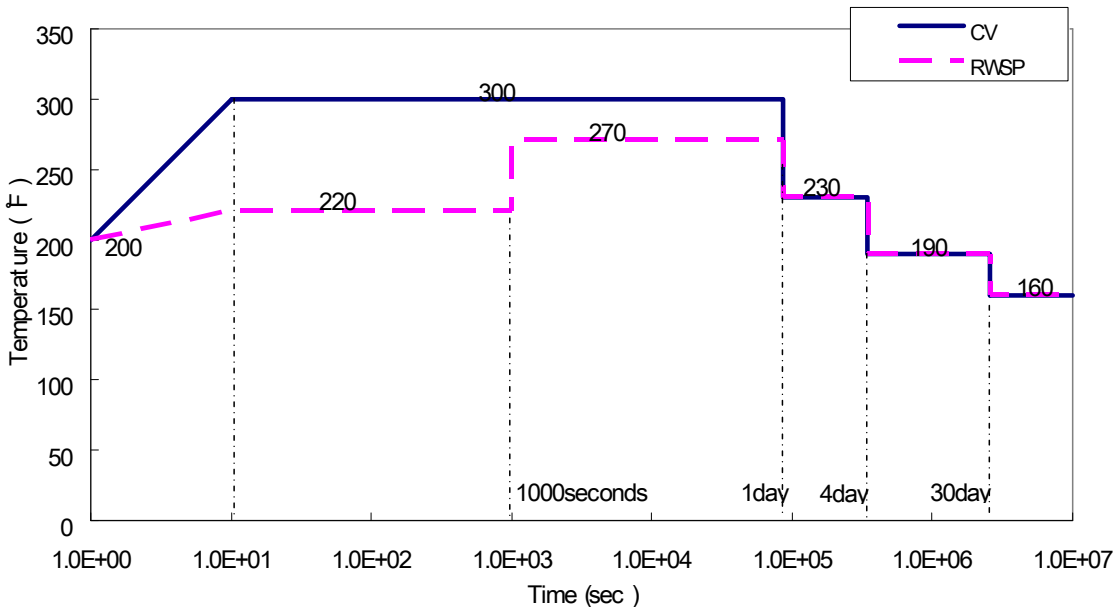

Note: In the temperature distribution analyses, temperature during normal operation is used as initial temperature.

Figure 3.8.1-11 Transient Conditions of Temperature of General Sump Pool Water in the PCCV and RWSP

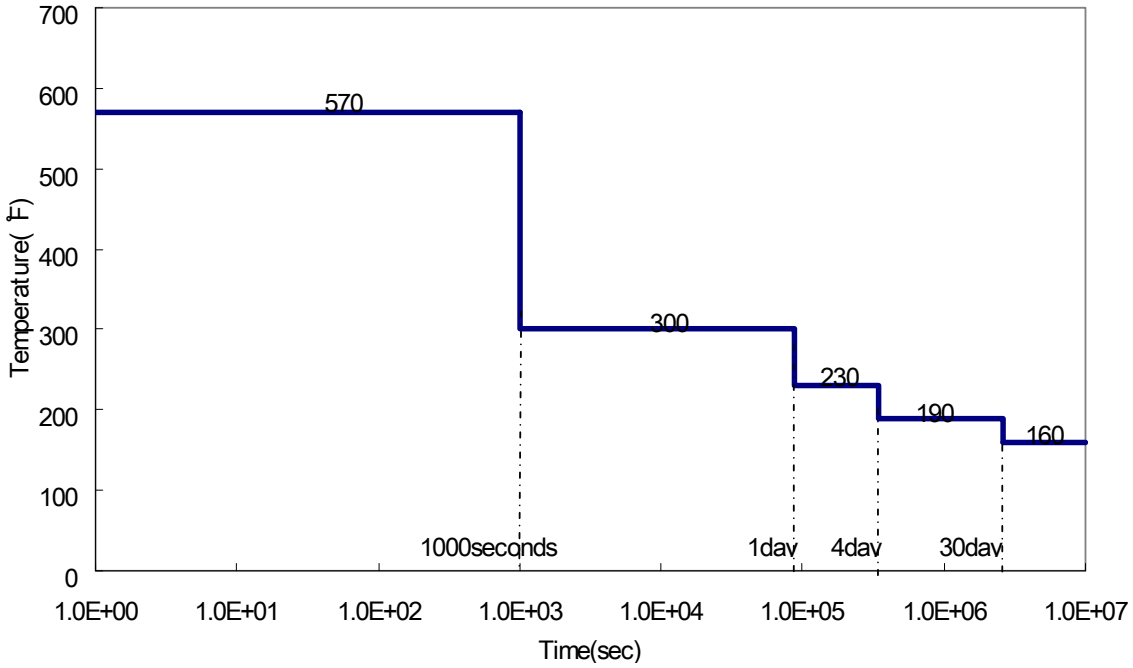

Figure 3.8.1-12 Transient Conditions of Temperature of the SG Compartment Atmosphere and Sump Pool Water (Pipe Break in the SG Compartment)

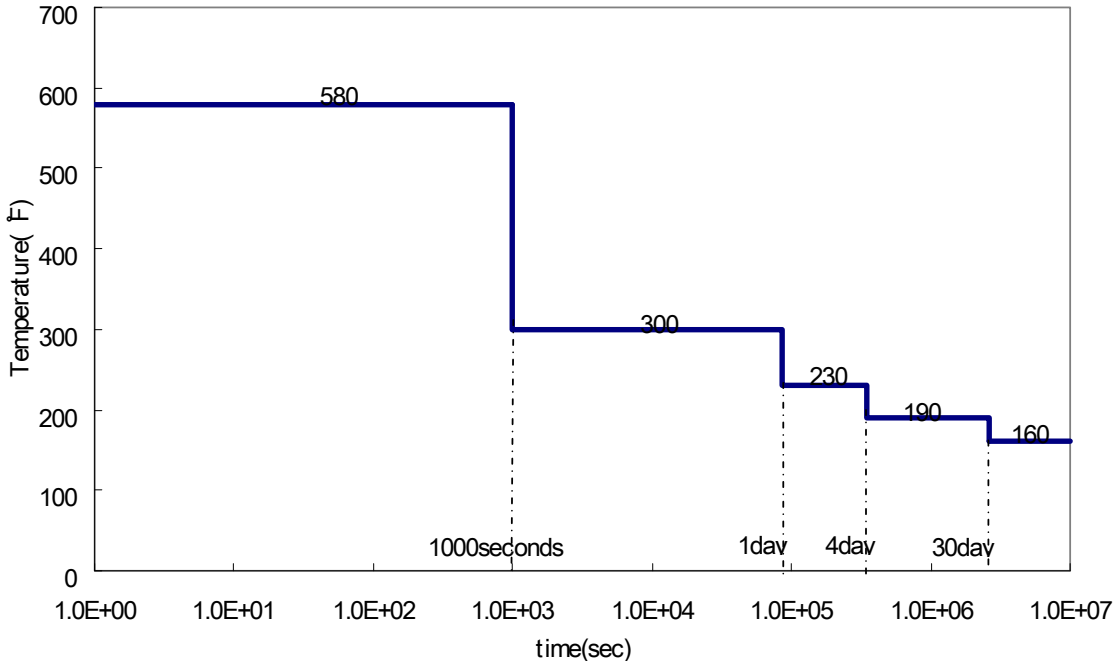

Figure 3.8.1-13 Transient Conditions of Temperature of the Refueling Cavity Atmosphere and Sump Pool Water (Pipe Break in the Refueling Cavity)

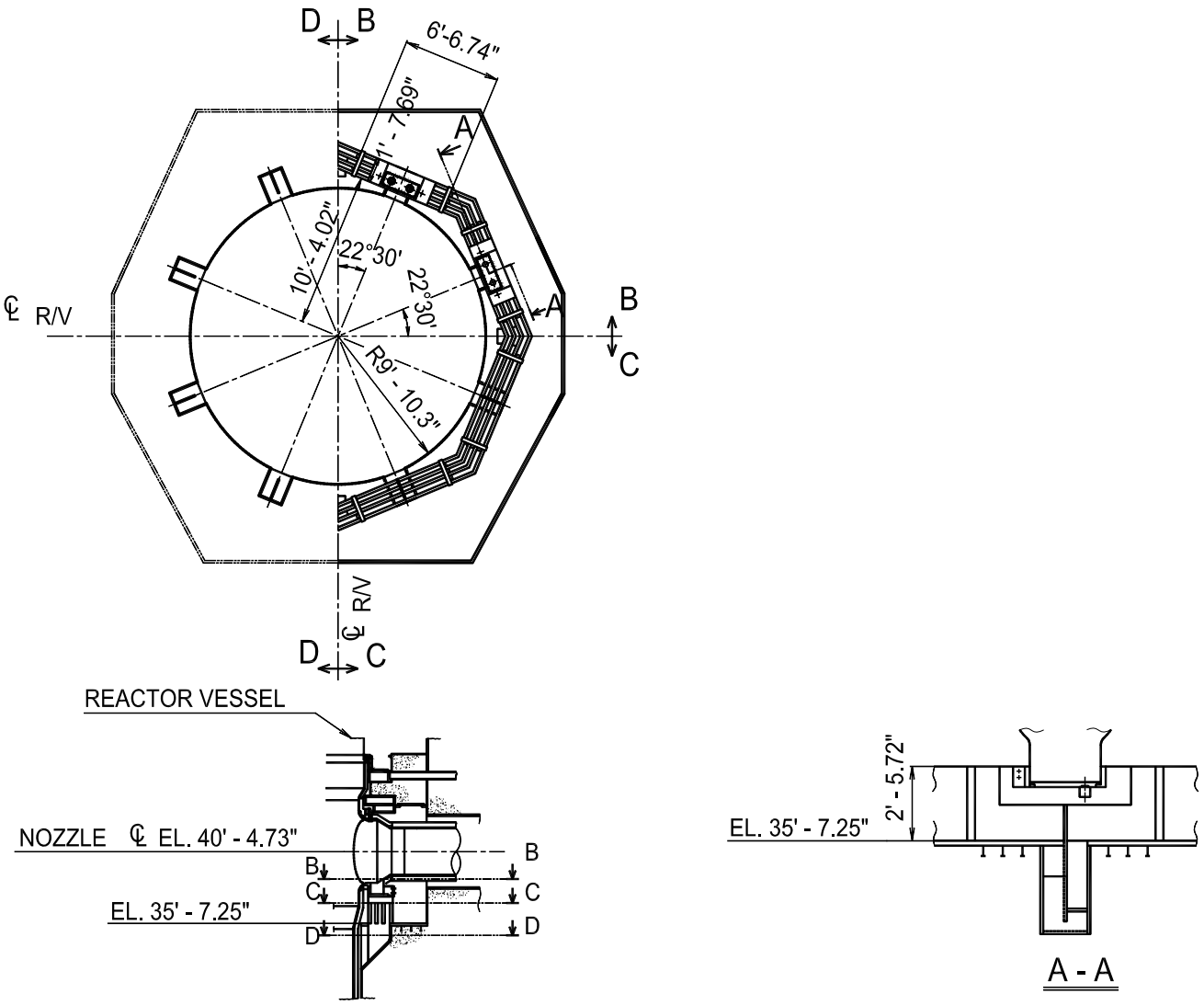

Figure 3.8.3-1 RV Support System

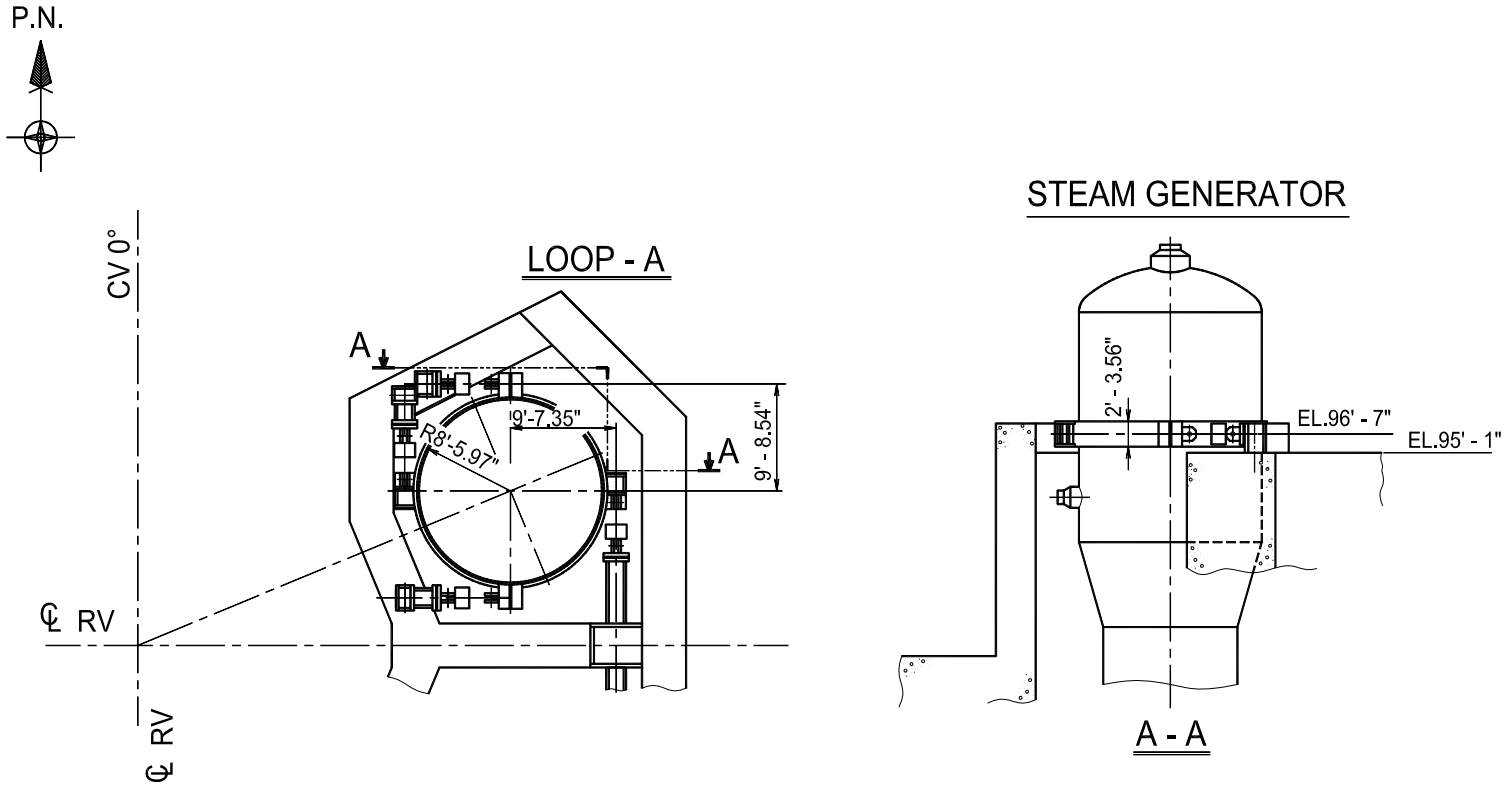

Figure 3.8.3-2 SG Support System
(Sheet 1 of 4)

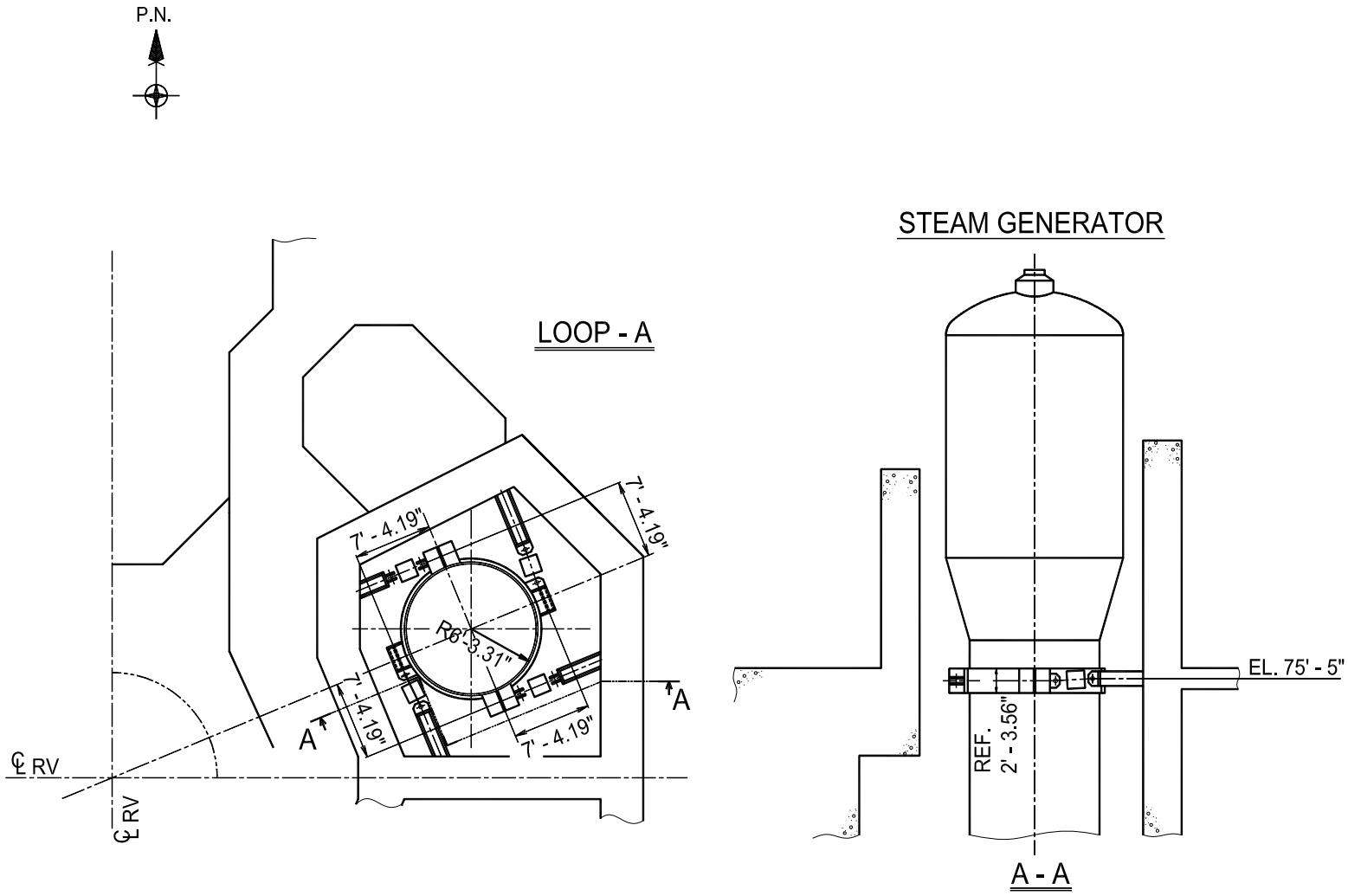

Figure 3.8.3-2 SG Support System (Sheet 2 of 4)

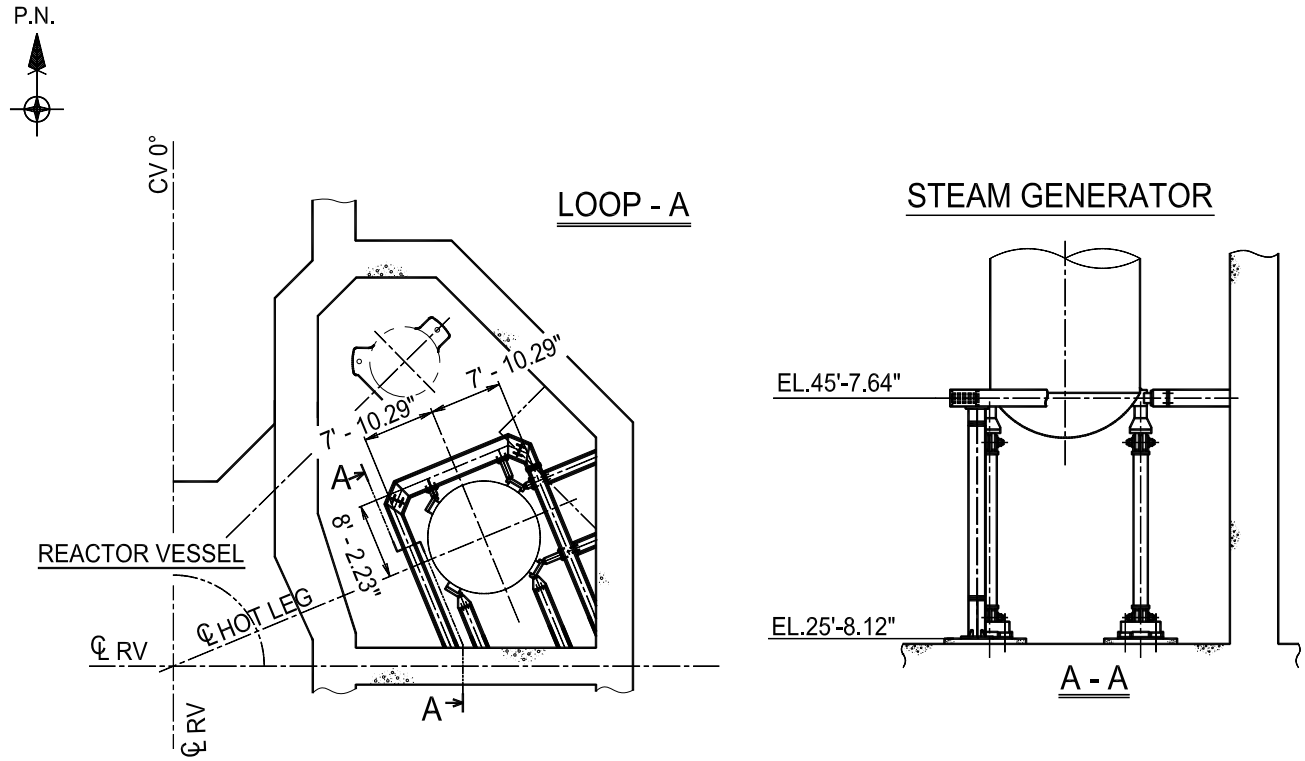

Figure 3.8.3-2 SG Support System (Sheet 3 of 4)

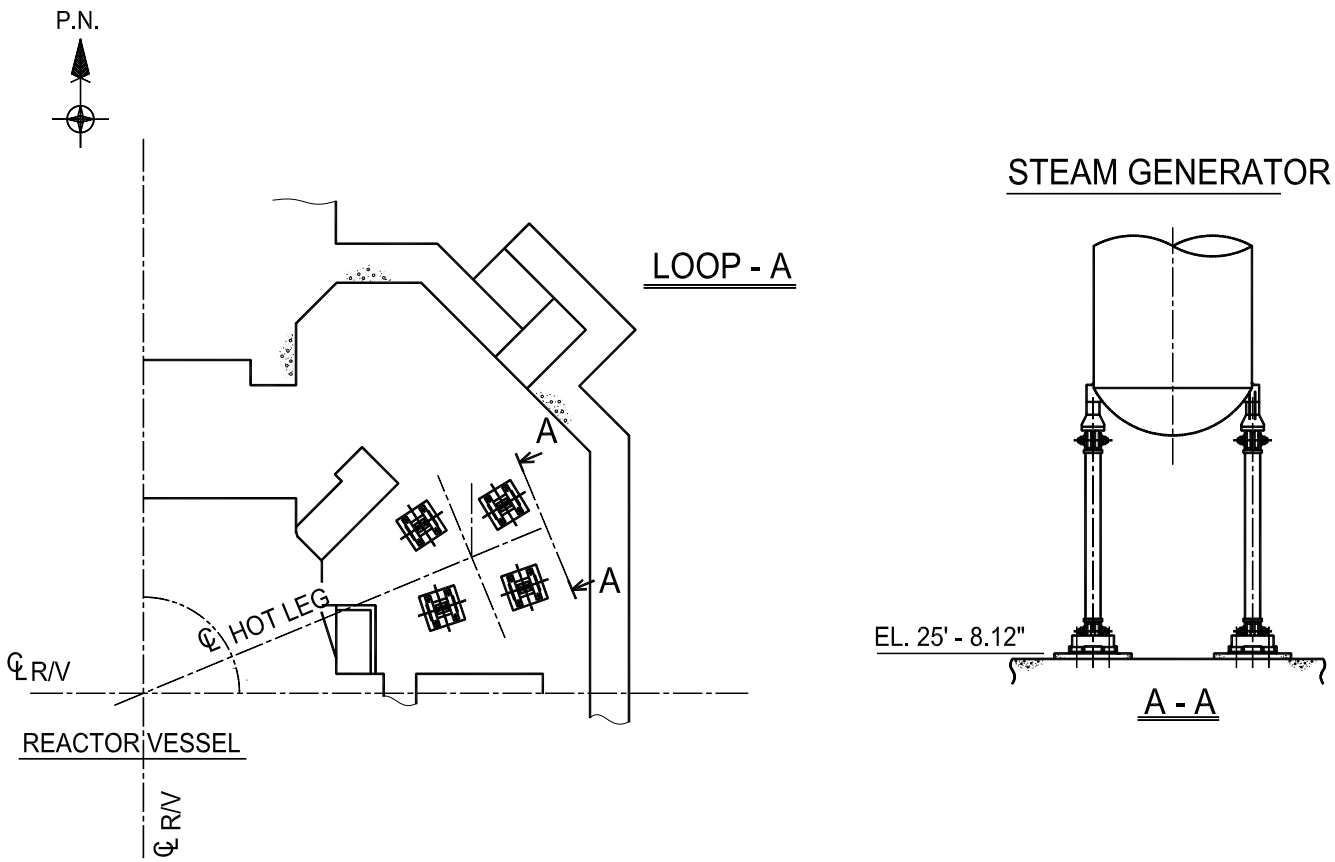

Figure 3.8.3-2 SG Support System (Sheet 4 of 4)

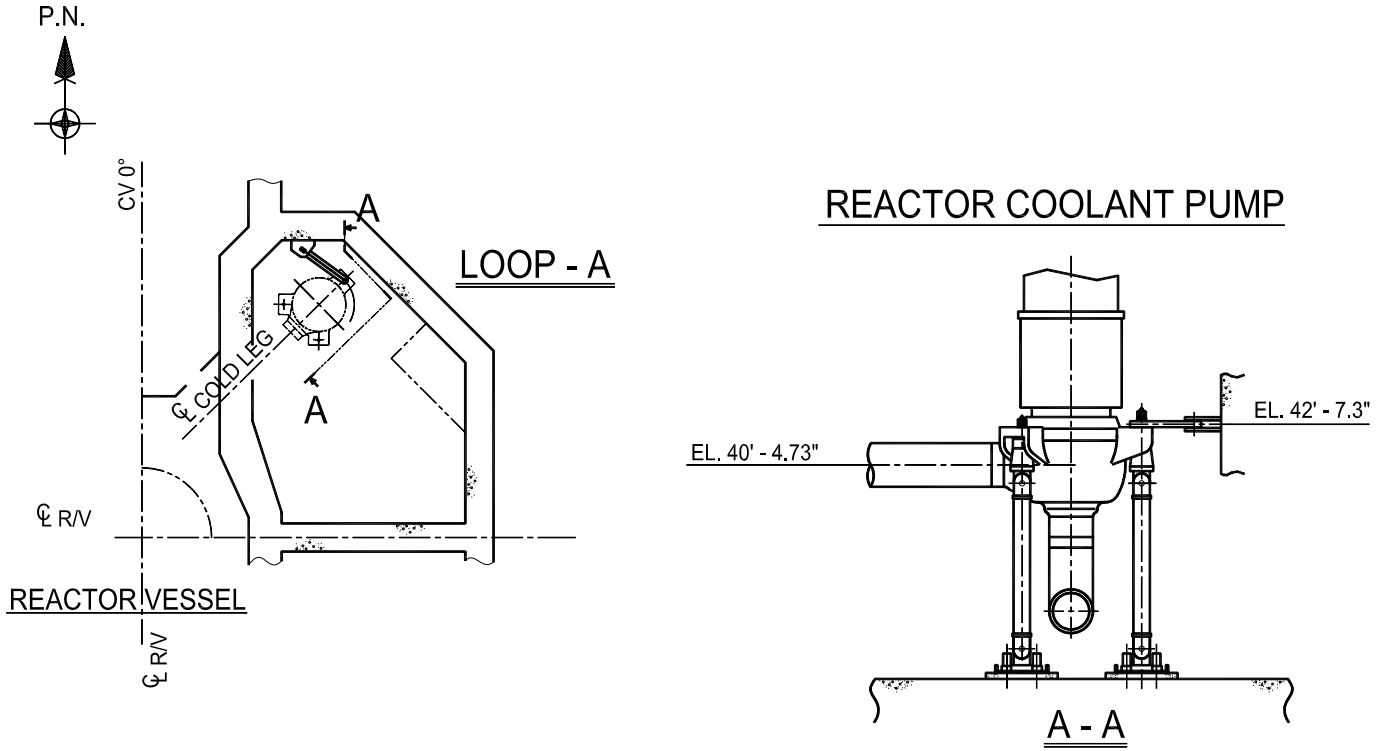

Figure 3.8.3-3 RCP Support System (Sheet 1 of 2)

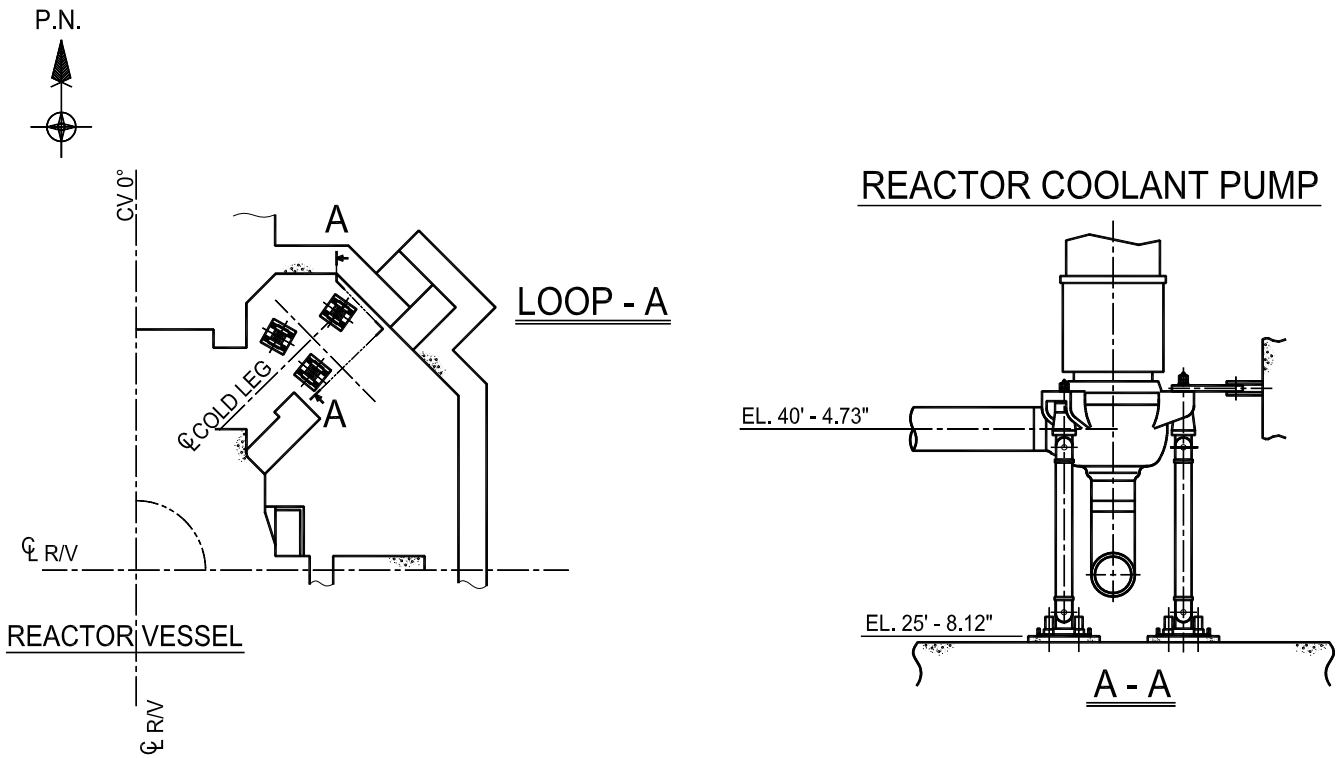

Figure 3.8.3-3 RCP Support System (Sheet 2 of 2)

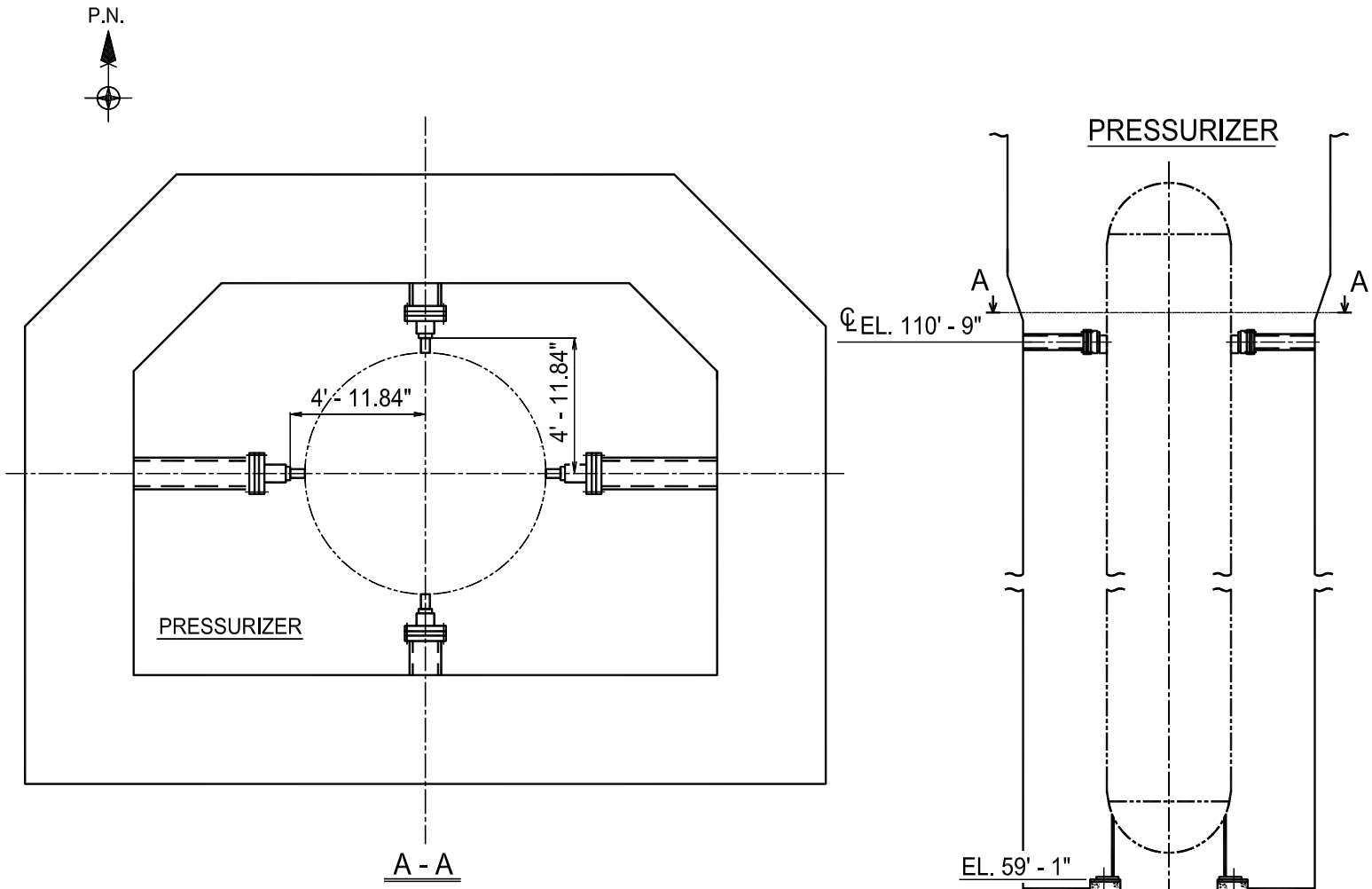

Figure 3.8.3-4 Pressurizer Support System

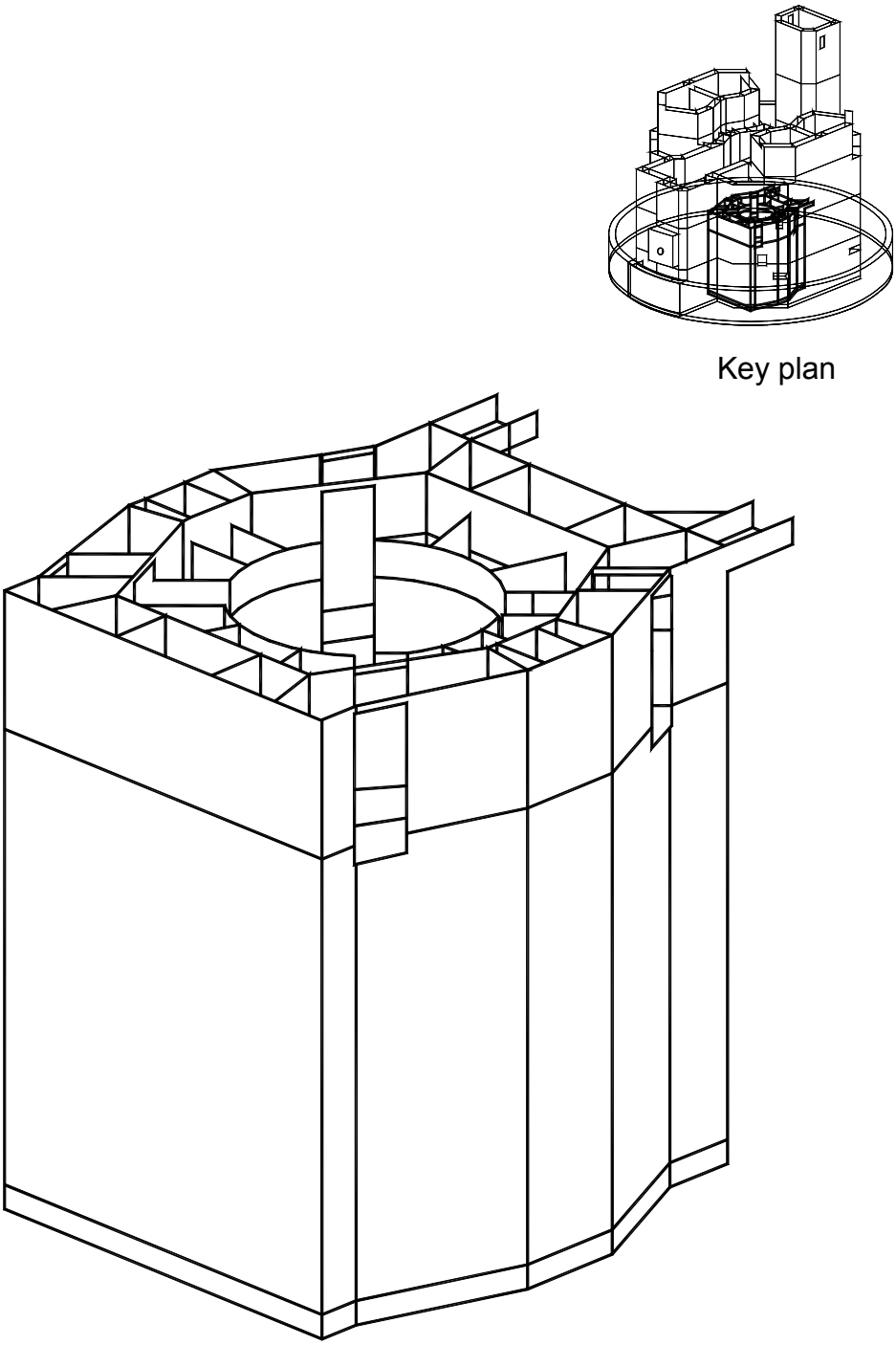

Primary Shield Walls

Figure 3.8.3-5 SC Module Isometrics (Sheet 1 of 8)

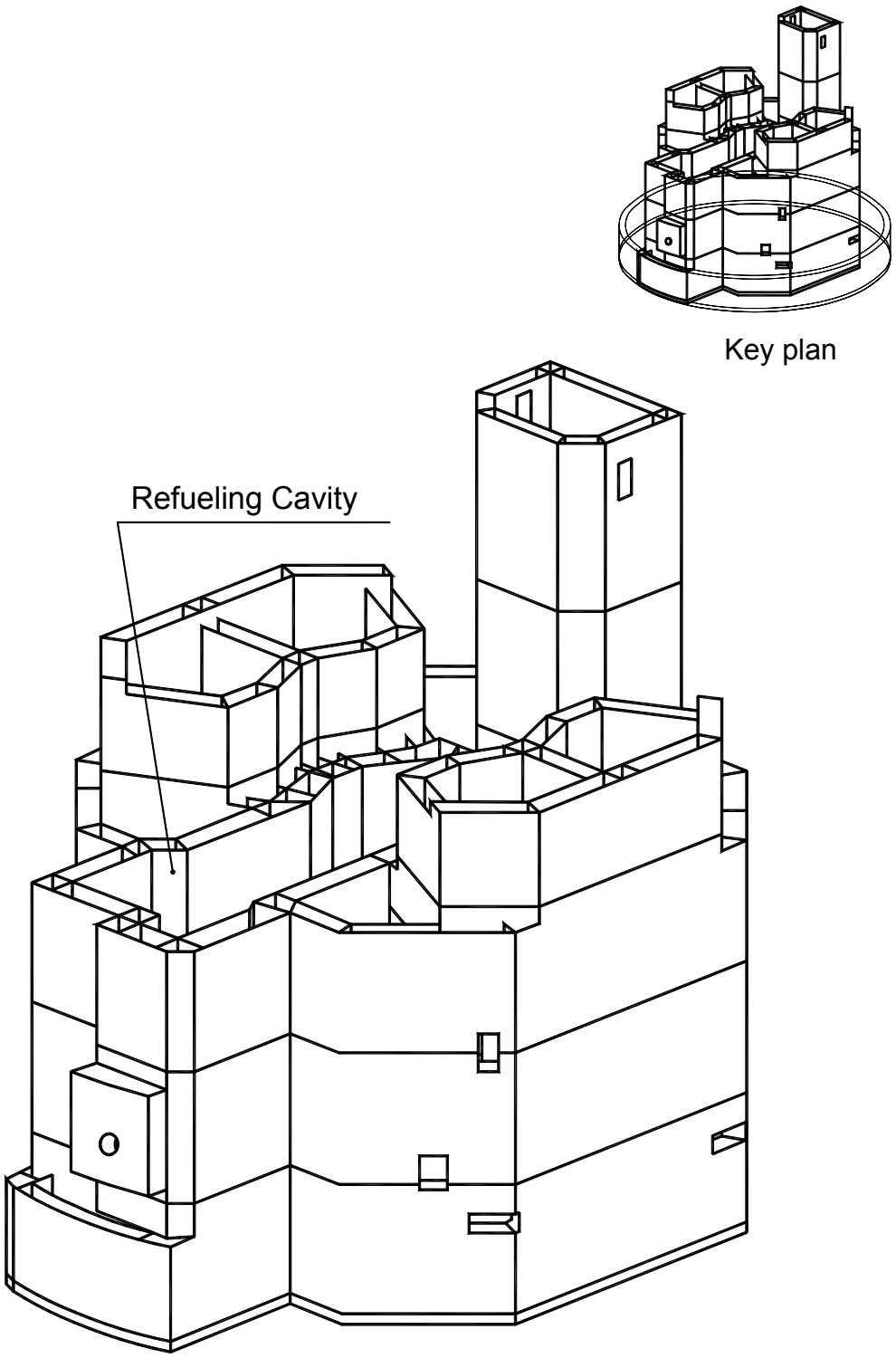

Secondary Shield Walls

Figure 3.8.3-5 SC Module Isometrics (Sheet 2 of 8)

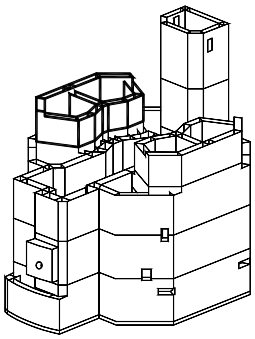

Key Plan

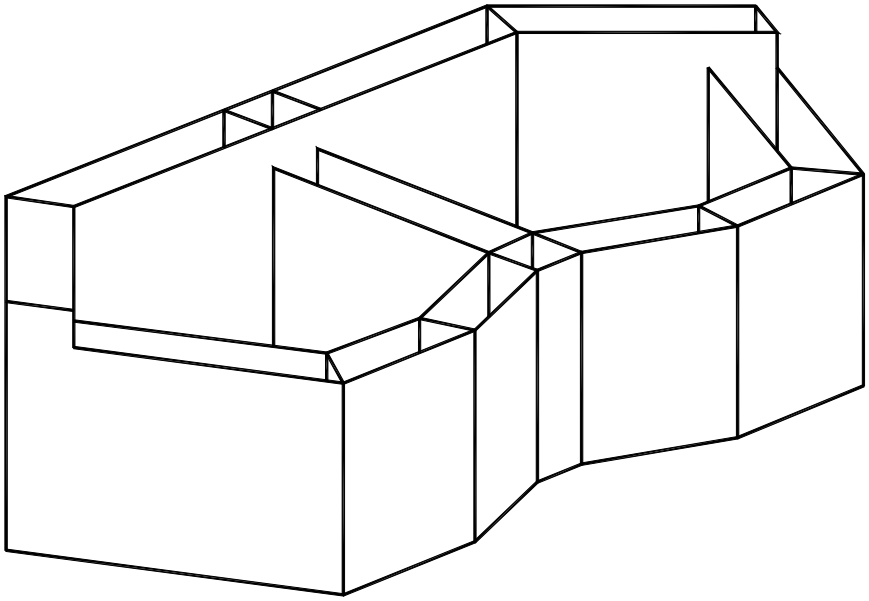

Part of Secondary Shield Walls

Figure 3.8.3-5 SC Module Isometrics (Sheet 3 of 8)

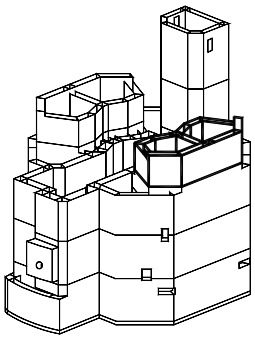

Key Plan

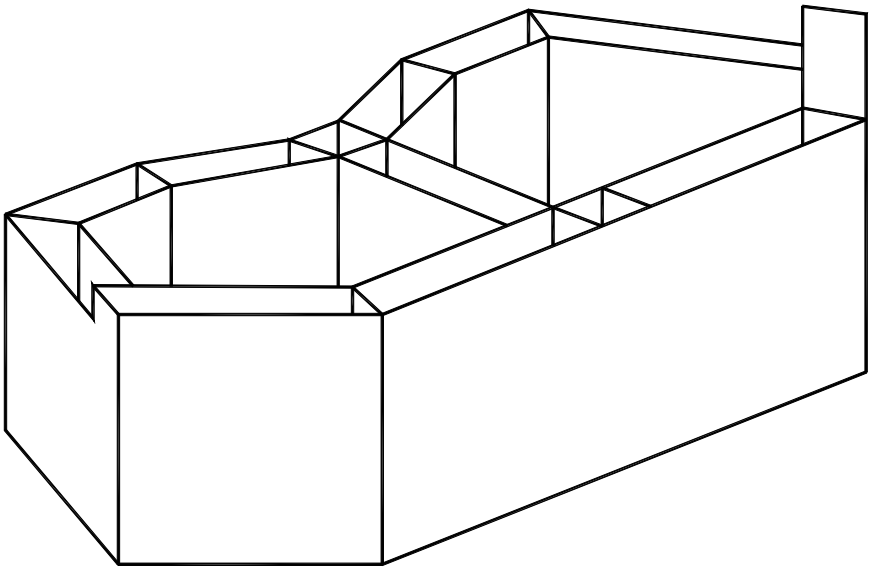

Part of Secondary Shield Walls

Figure 3.8.3-5 SC Module Isometrics (Sheet 4 of 8)

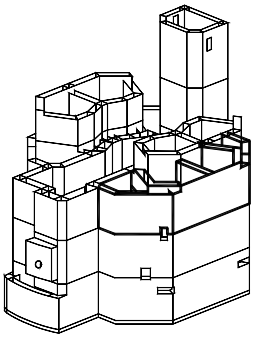

Key plan

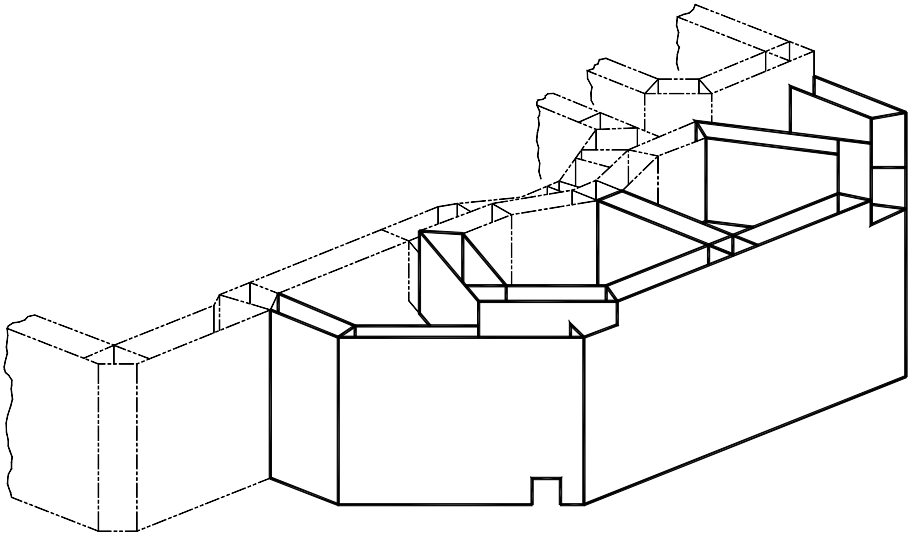

Part of Secondary Shield Walls

Figure 3.8.3-5 SC Module Isometrics (Sheet 5 of 8)

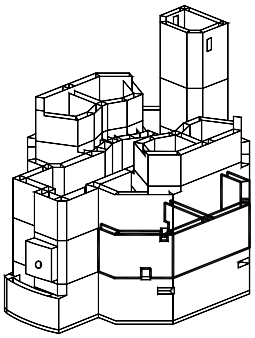

Key plan

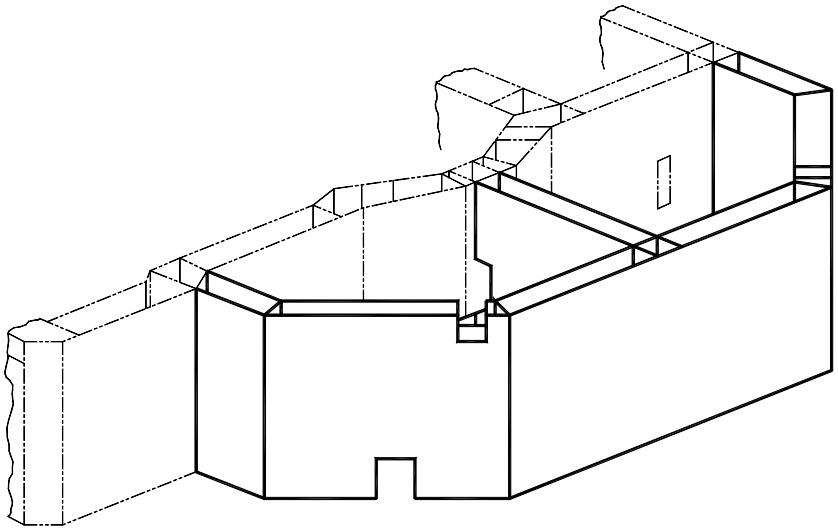

Part of Secondary Shield Walls

Figure 3.8.3-5 SC Module Isometrics (Sheet 6 of 8)

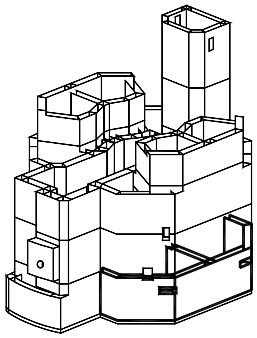

Key plan

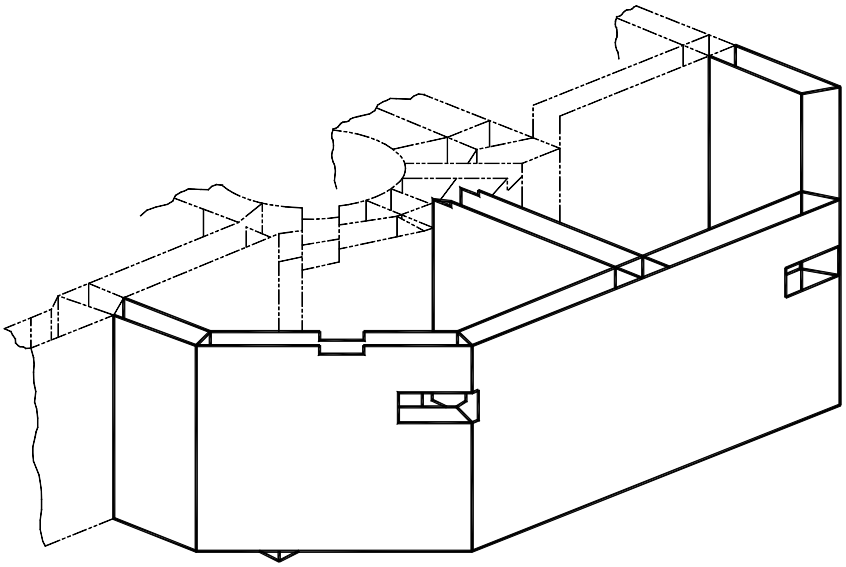

Part of Secondary Shield Walls

Figure 3.8.3-5 SC Module Isometrics
(Sheet 7 of 8)

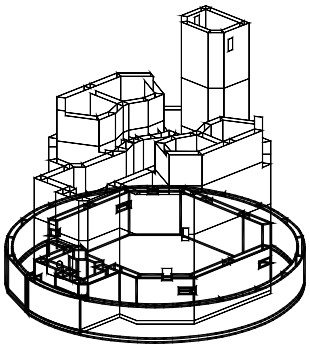

Key plan

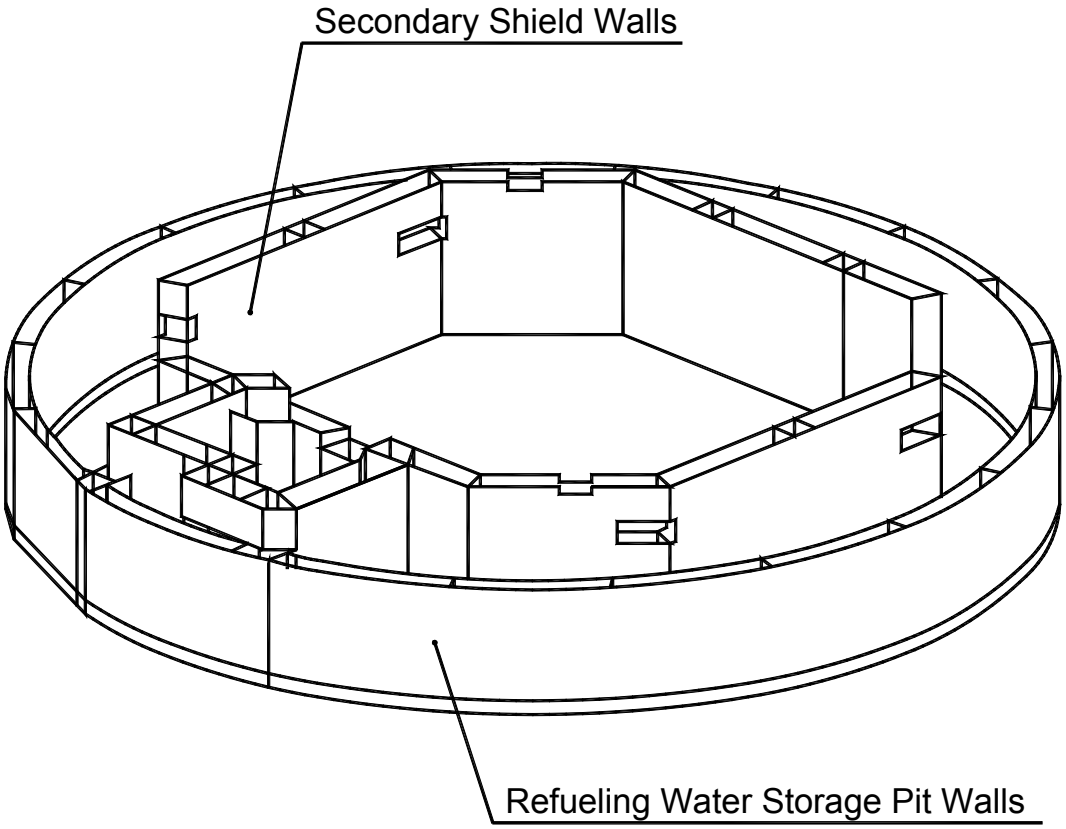

Part of Secondary Shield Walls

Figure 3.8.3-5 SC Module Isometrics
(Sheet 8 of 8)

~~Security-Related Information – Withhold Under 10 CFR 2.390~~

Figure 3.8.3-6 Interior Compartments Wall Layout and Configuration (Sheet 1 of 7)

~~Security-Related Information – Withhold Under 10 CFR 2.390~~

Figure 3.8.3-6 Interior Compartments Wall Layout and Configuration (Sheet 2 of 7)

~~Security-Related Information – Withhold Under 10 CFR 2.390~~

Figure 3.8.3-6 Interior Compartments Wall Layout and Configuration (Sheet 3 of 7)

~~Security-Related Information – Withhold Under 10 CFR 2.390~~

Figure 3.8.3-6 Interior Compartments Wall Layout and Configuration (Sheet 4 of 7)

~~Security-Related Information – Withhold Under 10 CFR 2.390~~

Figure 3.8.3-6 Interior Compartments Wall Layout and Configuration (Sheet 5 of 7)

~~Security Related Information – Withhold Under 10 CFR 2.390~~

Figure 3.8.3-6 Interior Compartments Wall Layout and Configuration (Sheet 6 of 7)

~~Security Related Information – Withhold Under 10 CFR 2.390~~

Figure 3.8.3-6 Interior Compartments Wall Layout and Configuration (Sheet 7 of 7)

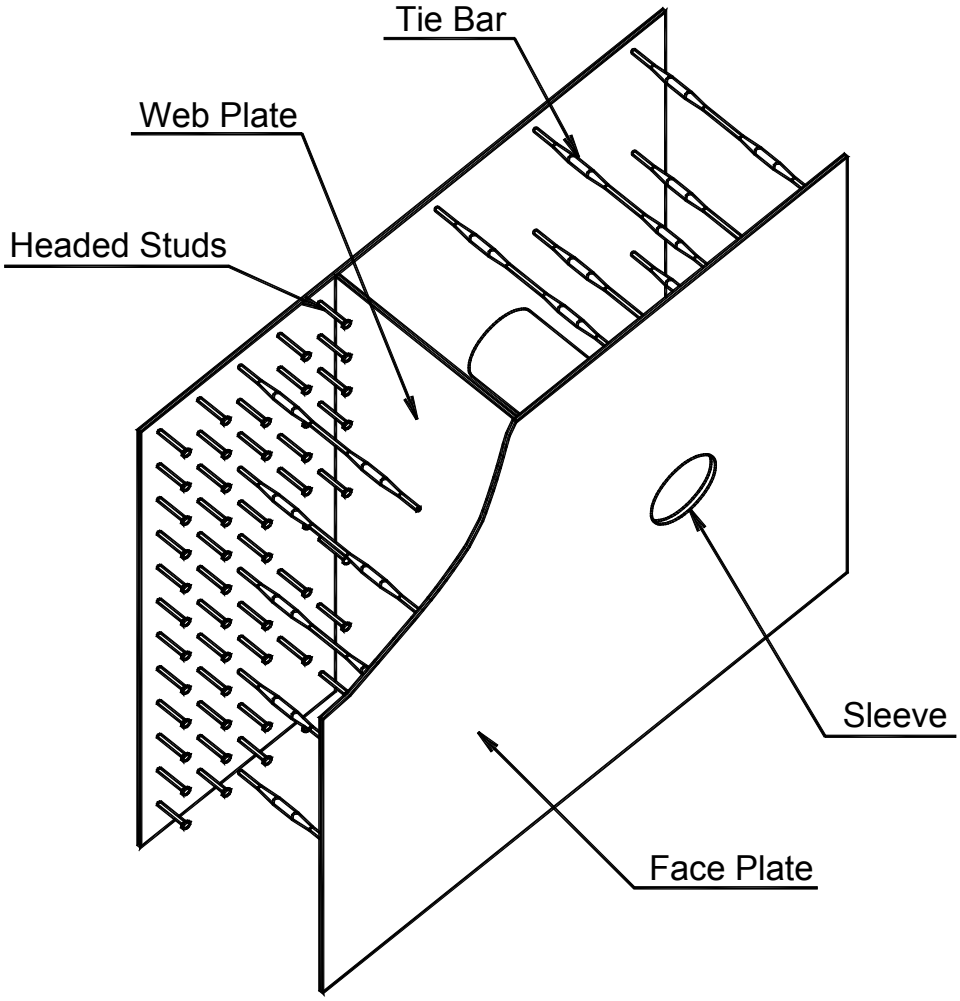

Figure 3.8.3-7 Typical Details of SC Modules (Sheet 1 of 5)

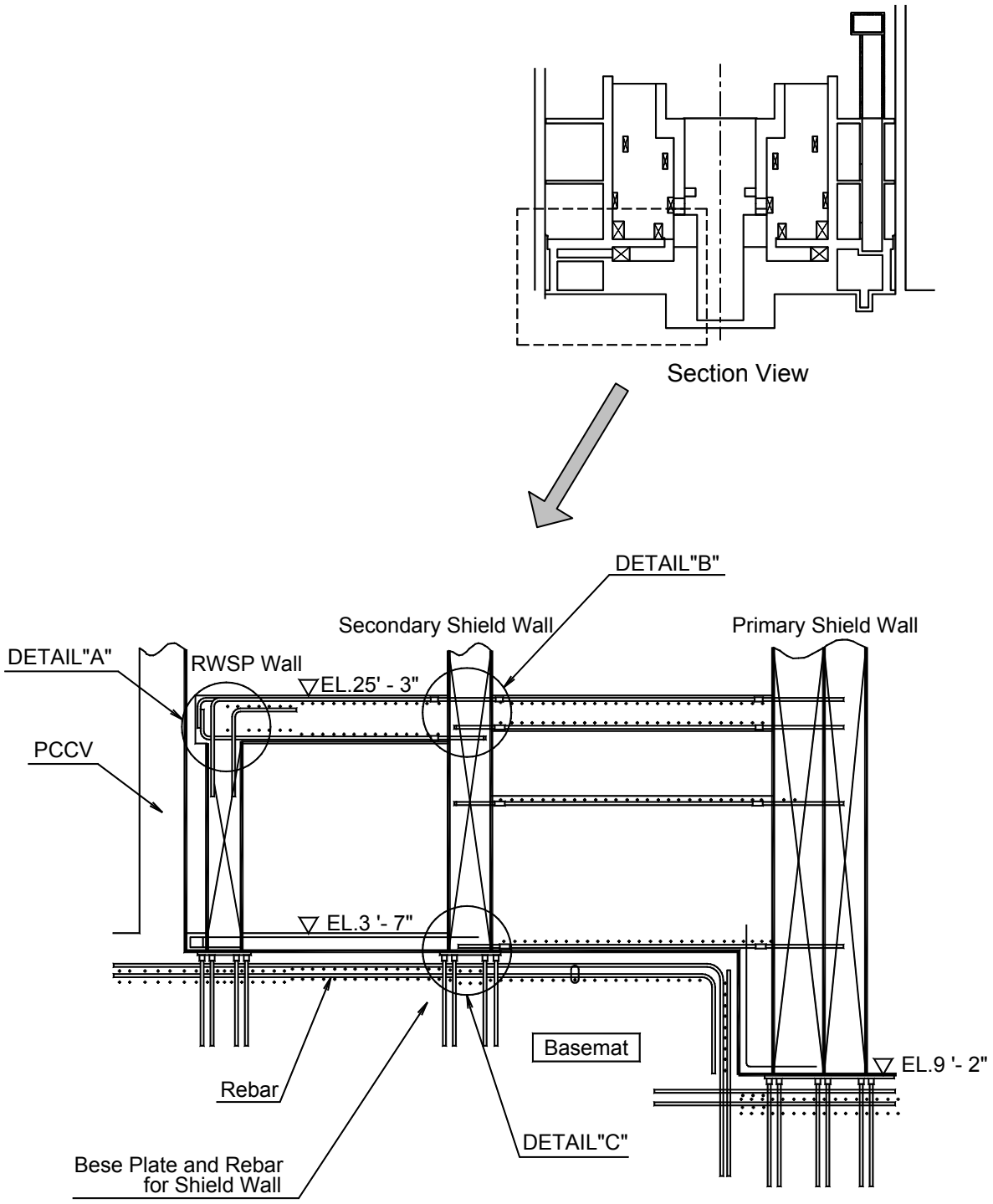

Figure 3.8.3-7 Typical Details of SC Modules (Sheet 2 of 5)

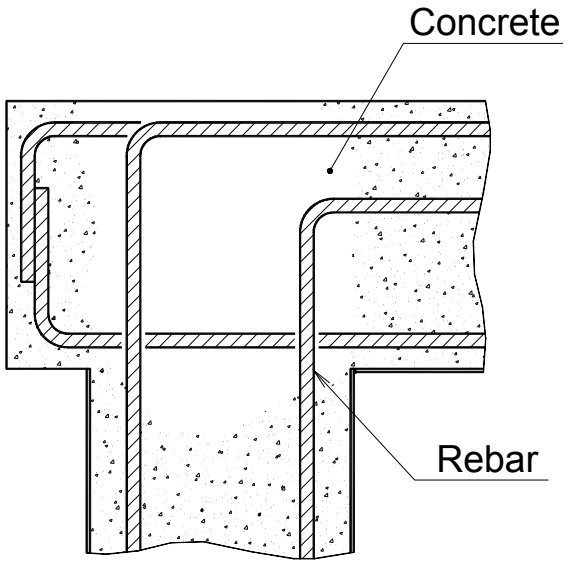

Detail A

Figure 3.8.3-7 Typical Details of SC Modules (Sheet 3 of 5)

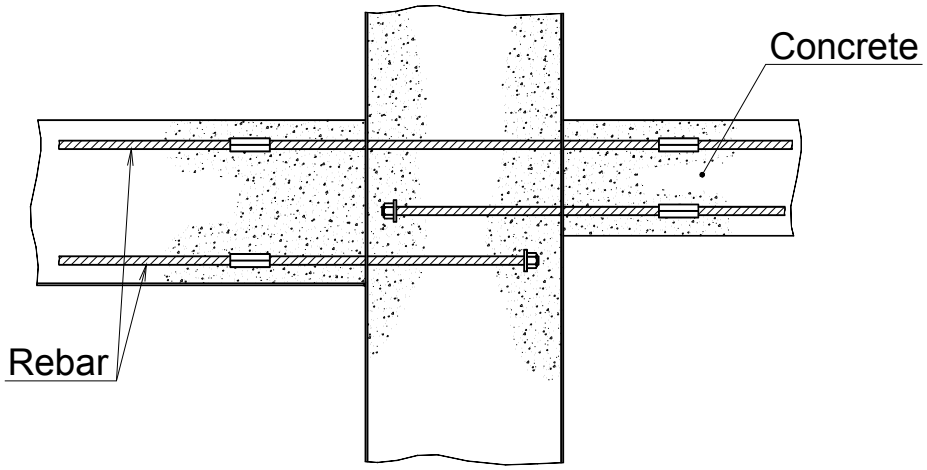

Detail B

Figure 3.8.3-7 Typical Details of SC Modules (Sheet 4 of 5)

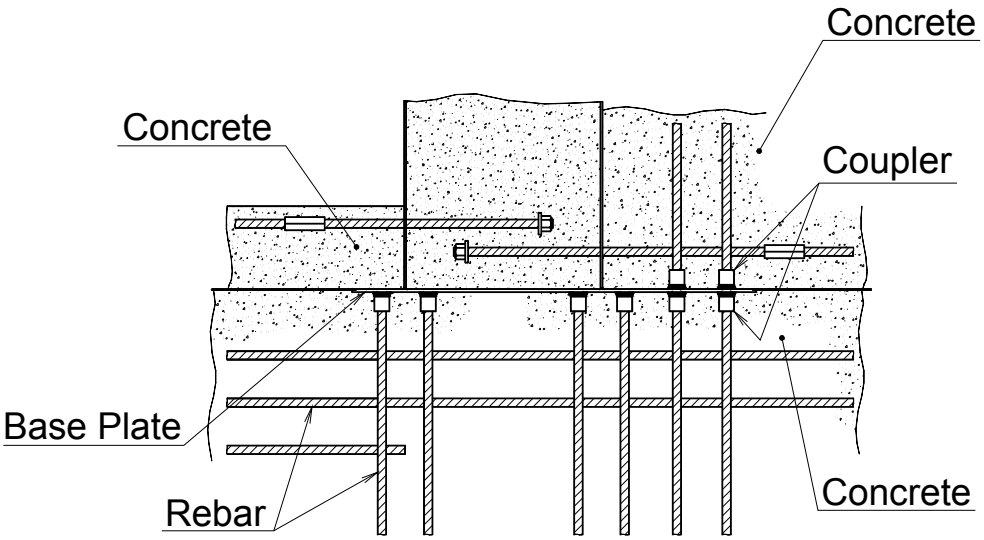

Detail C

Figure 3.8.3-7 Typical Details of SC Modules (Sheet 5 of 5)

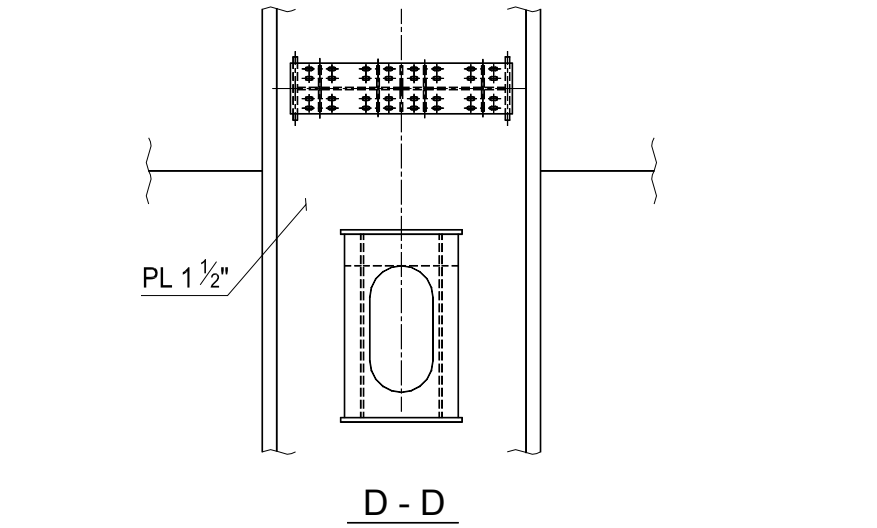

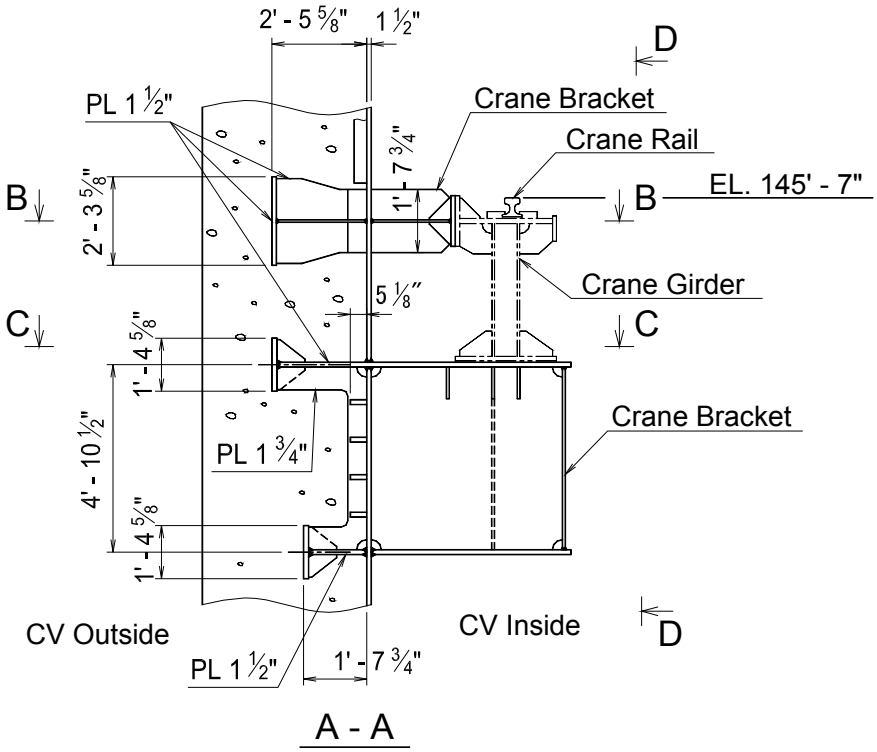

Figure 3.8.3-8 Polar Crane Supports (Sheet 1 of 3)

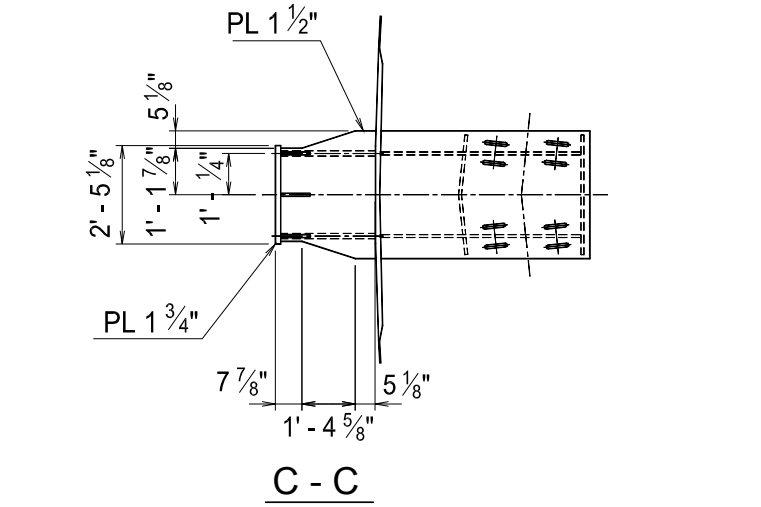

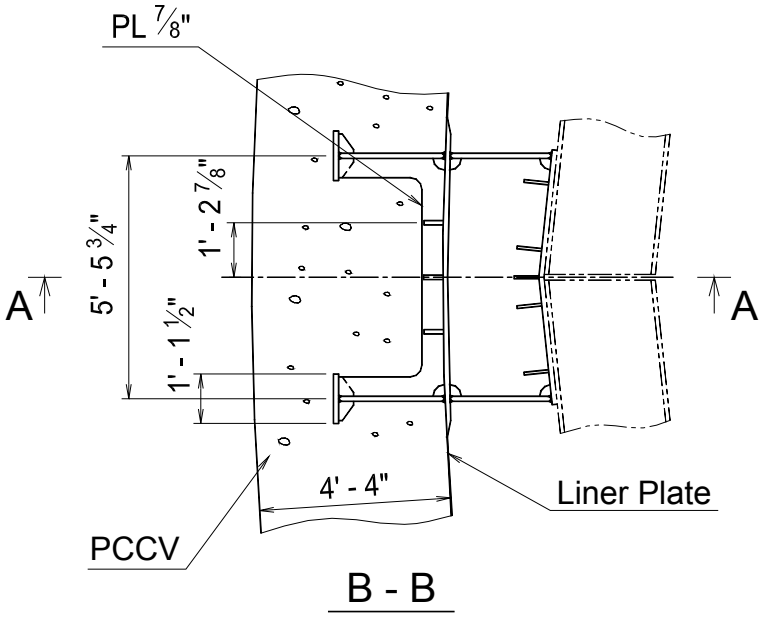

Figure 3.8.3-8 Polar Crane Supports (Sheet 2 of 3)

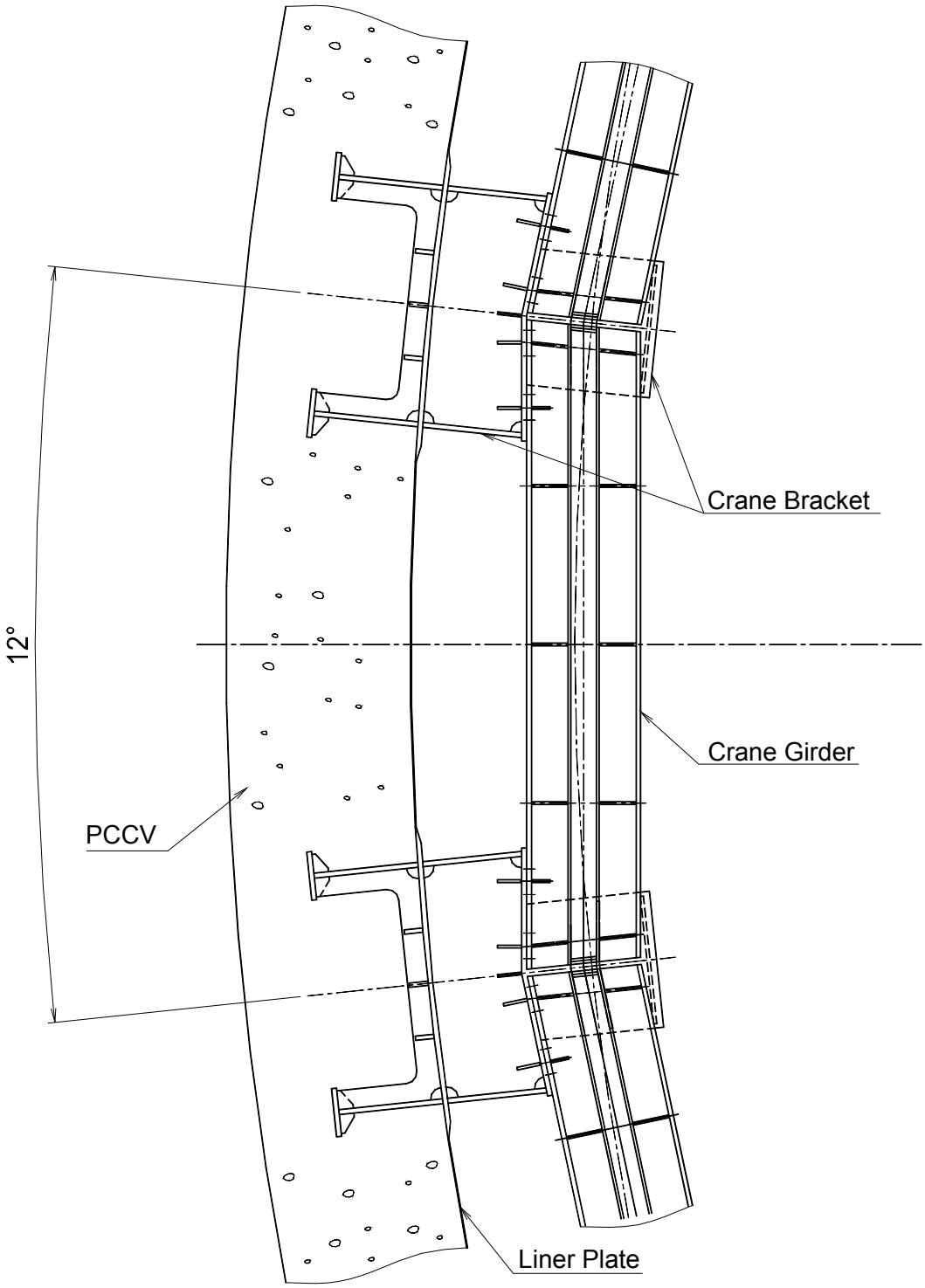

Figure 3.8.3-8 Polar Crane Supports (Sheet 3 of 3)

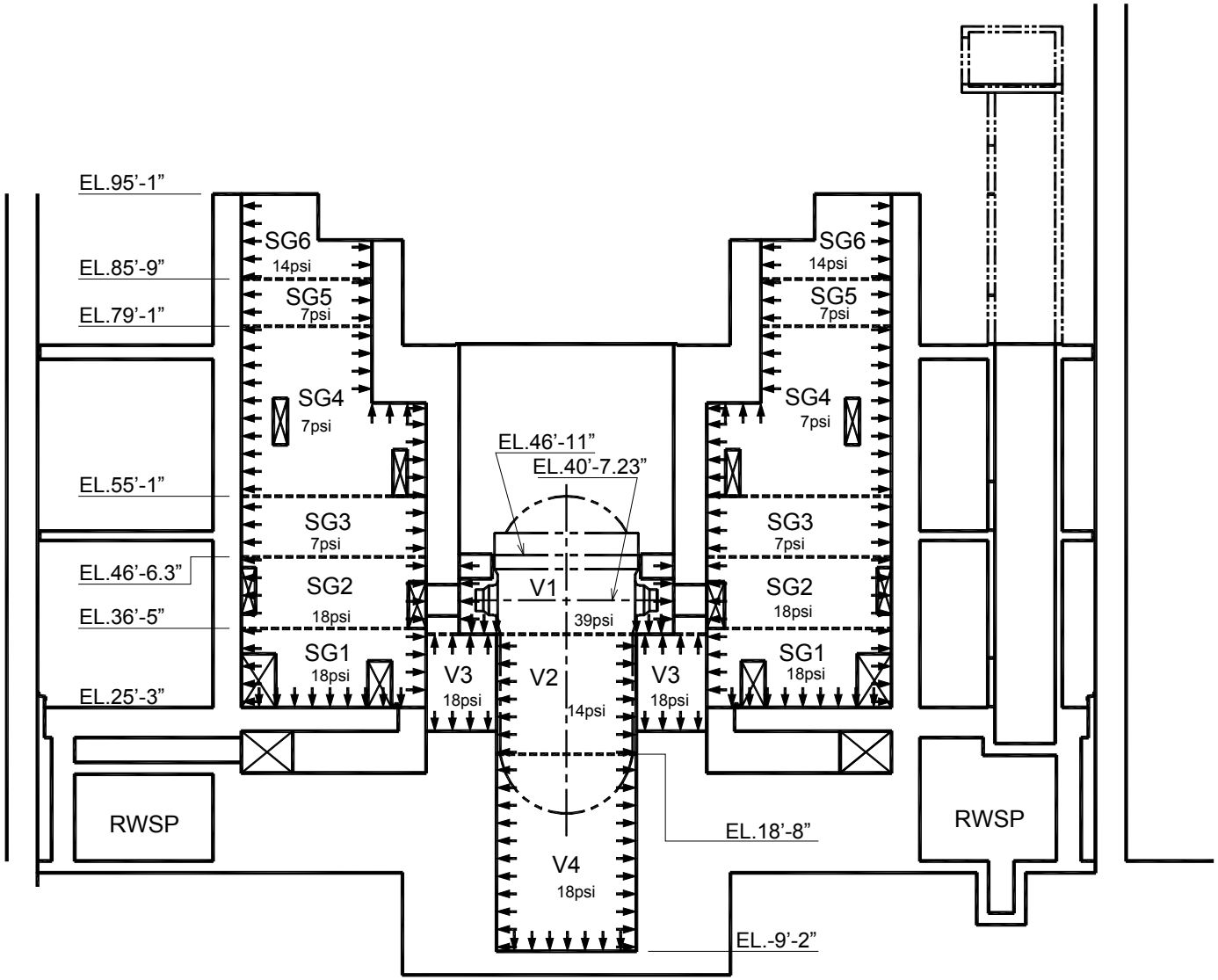

East-West Section

Figure 3.8.3-9 Containment Internal Structure Pressure Loads (Sheet 1 of 2)

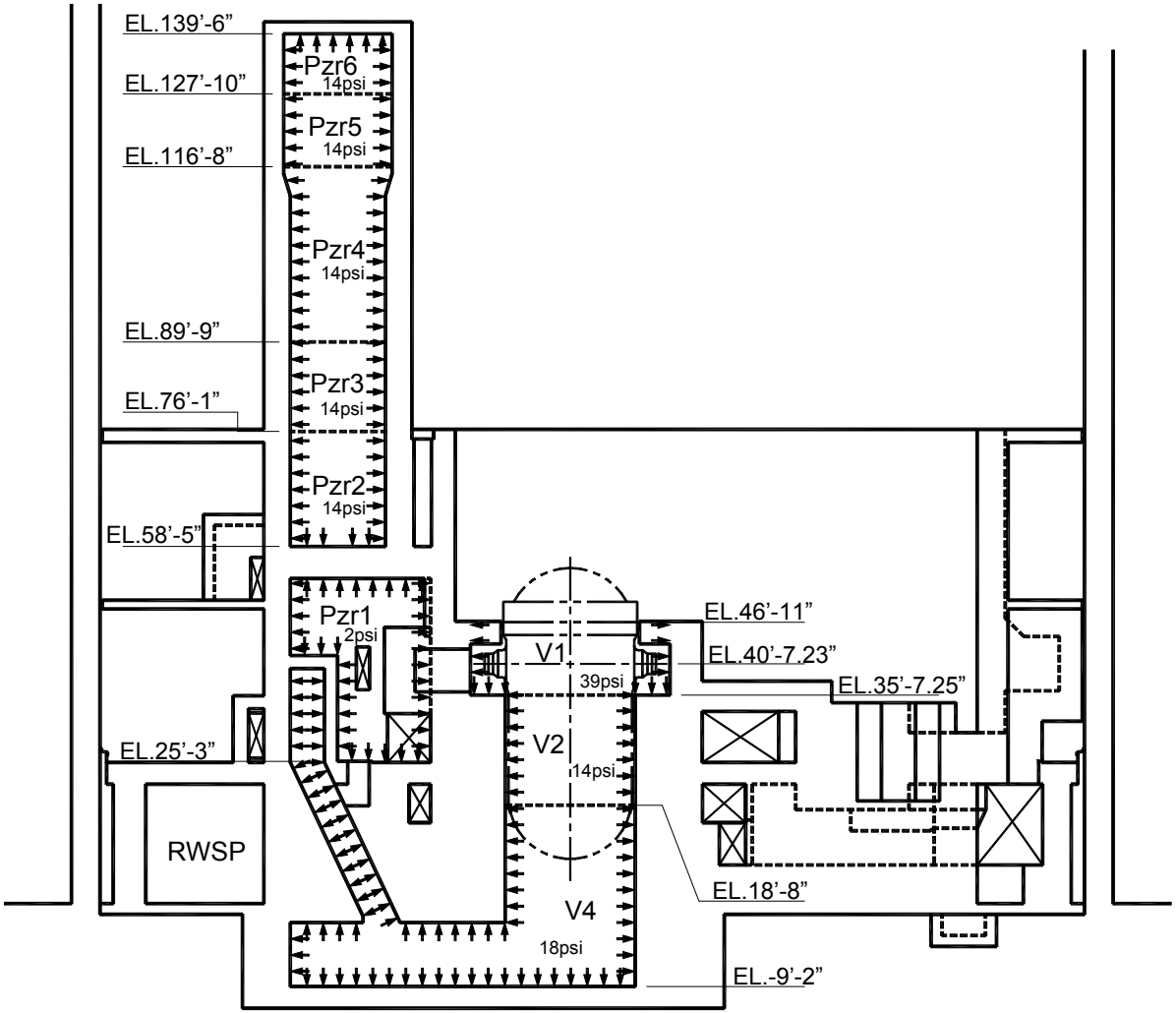

North-South Section

Figure 3.8.3-9 Containment Internal Structure Pressure Loads (Sheet 2 of 2)

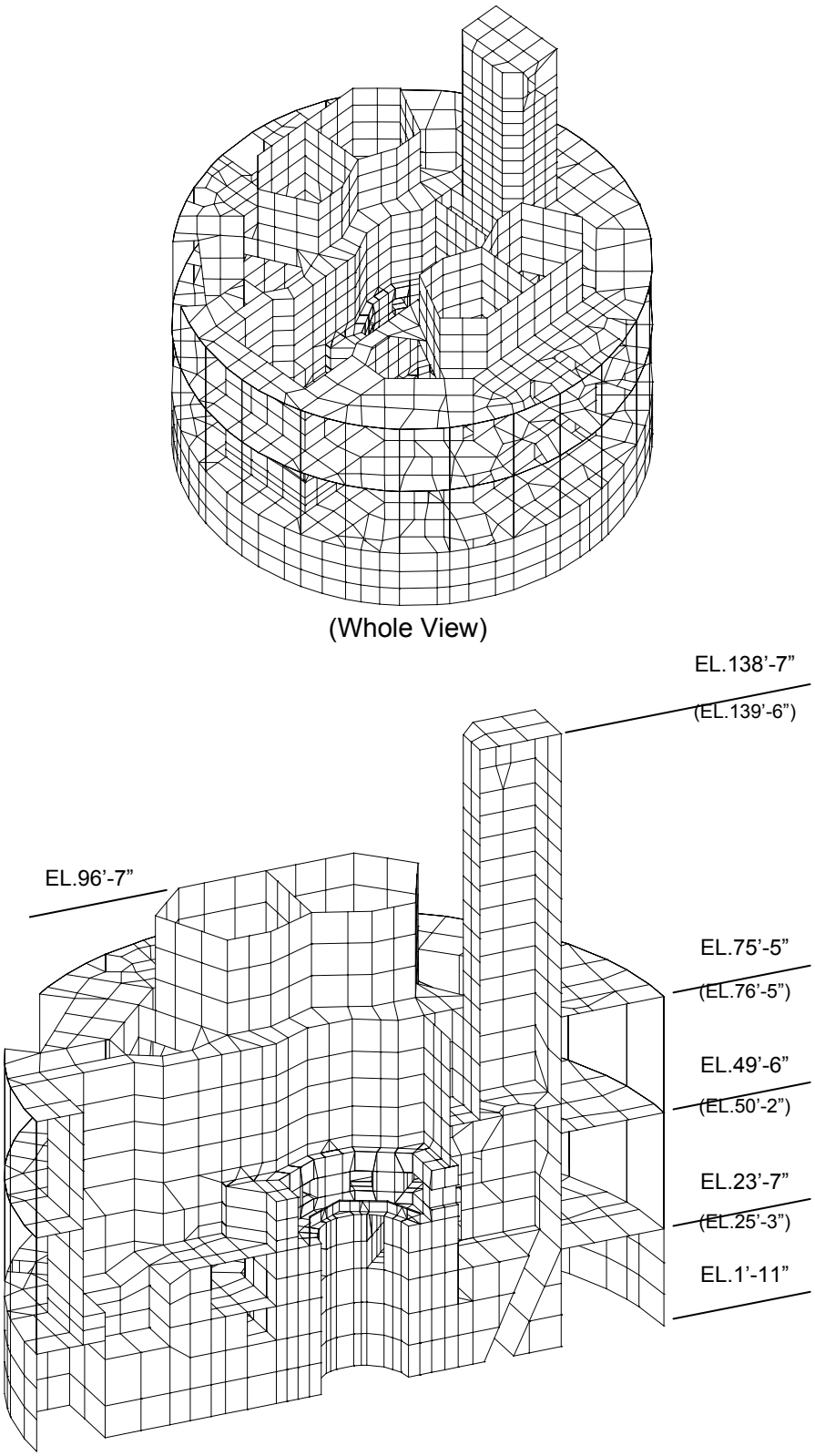

Figure 3.8.3-10 Containment Internal Structure FE Model

~~Security Related Information – Withhold Under 10 CFR 2.390~~

Figure 3.8.3-11 Critical Locations of SC Modules

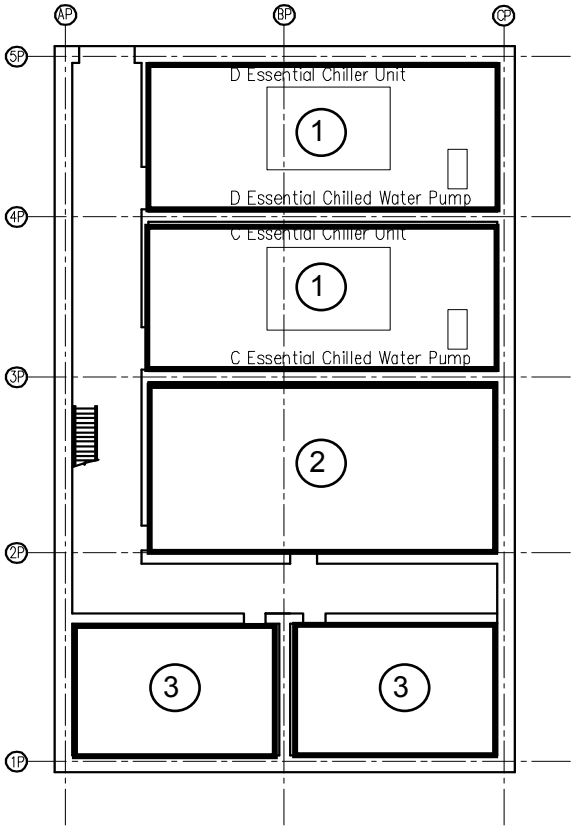

Plan at EL-26'-4" (B1F)

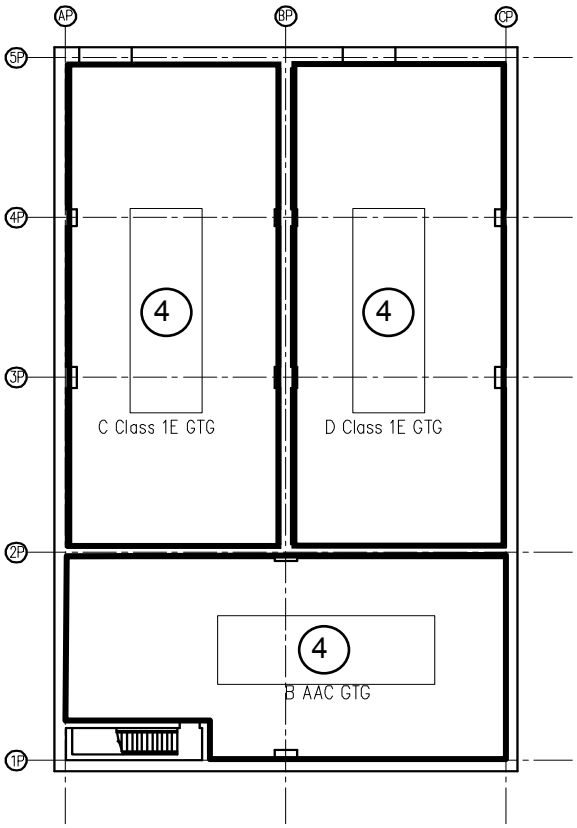

Plan at EL 3'-7" (1F)

Figure 3.8.4-1 (Sheet 1 of 2)
Identification of Areas for PS/B Temperature Gradients in Table 3.8.4-2

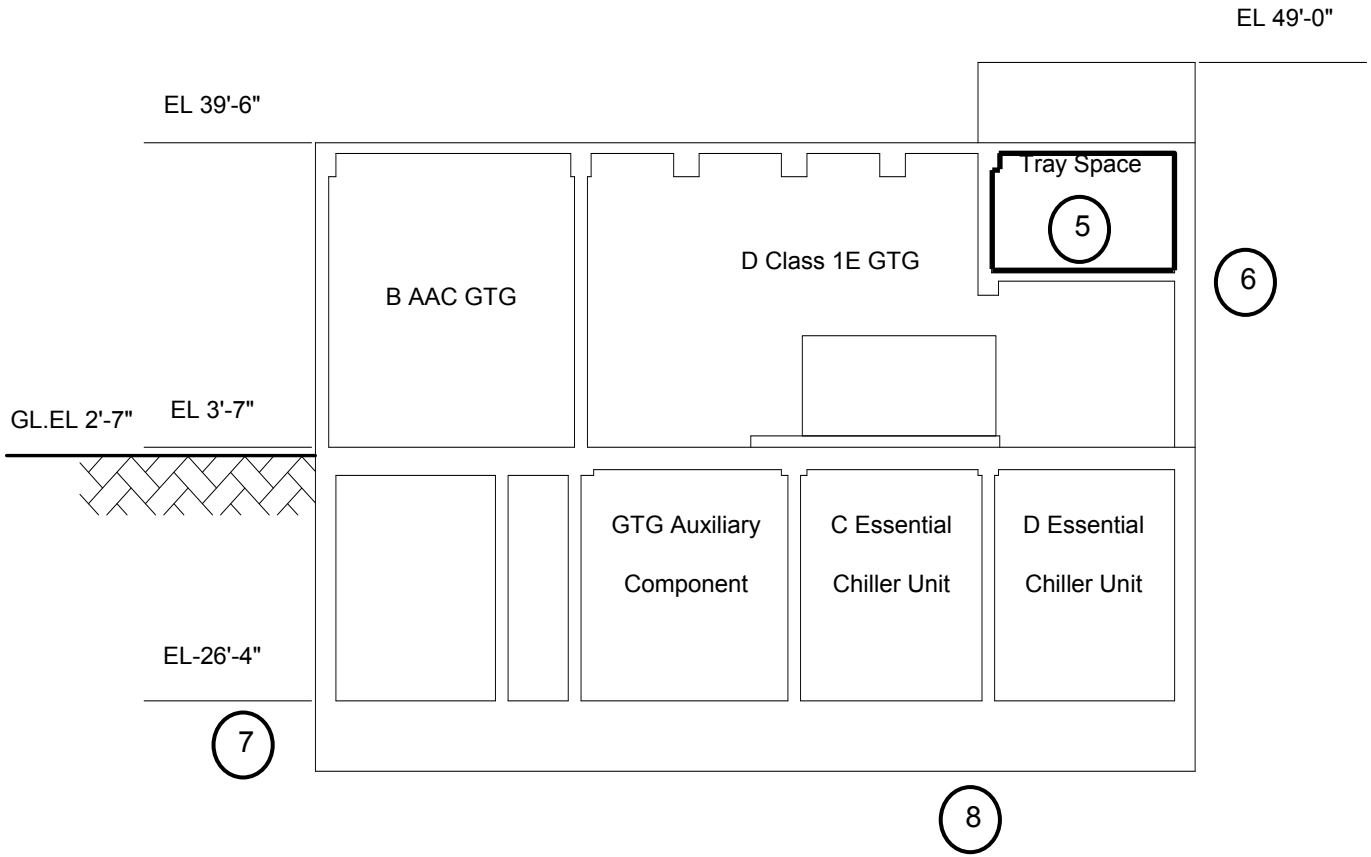

Figure 3.8.4-1 (Sheet 2 of 2)
Identification of Areas for PS/B Temperature Gradients in Table 3.8.4-2

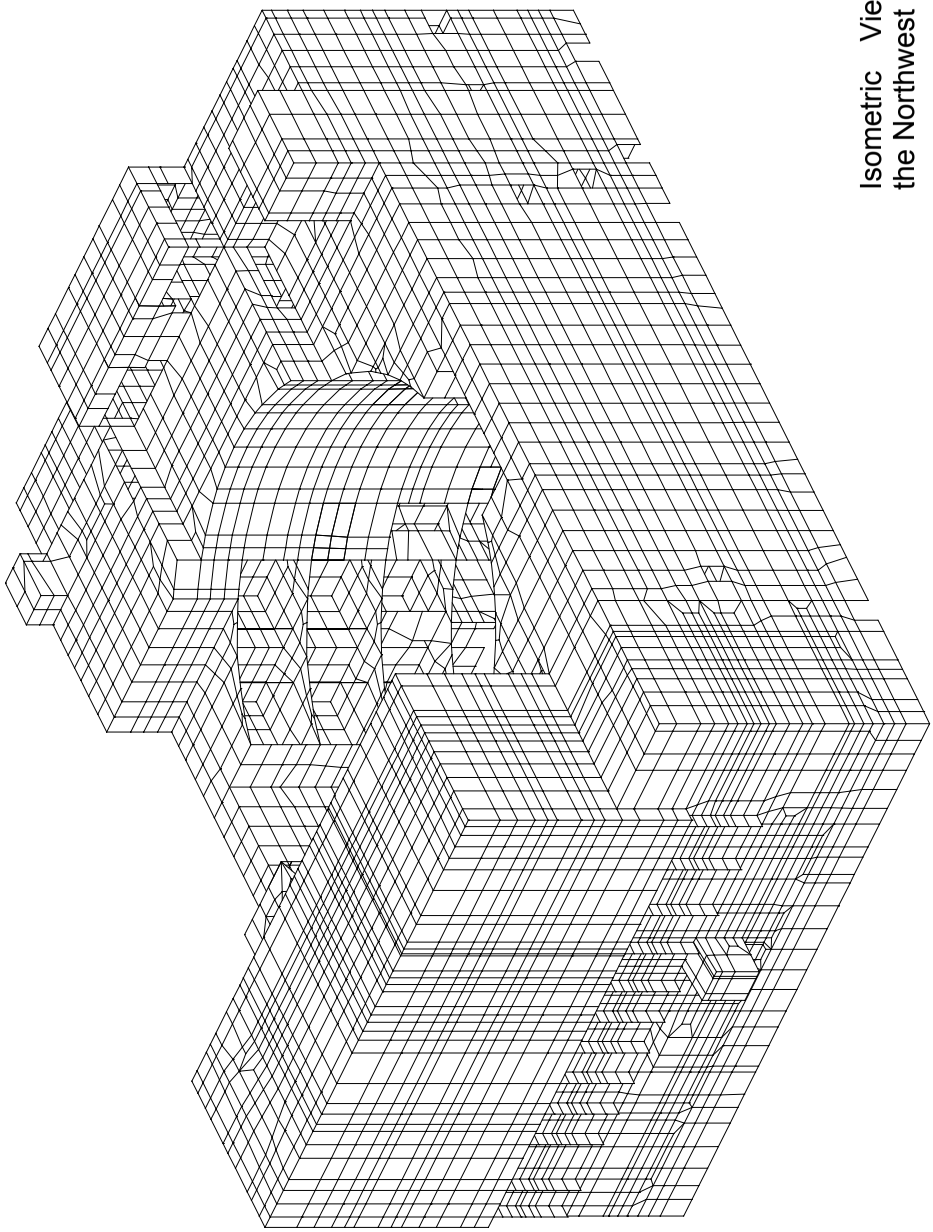

Isometric View from the Northwest Side

Figure 3.8.4-2 FE Model of R/B (Sheet 1 of 2)

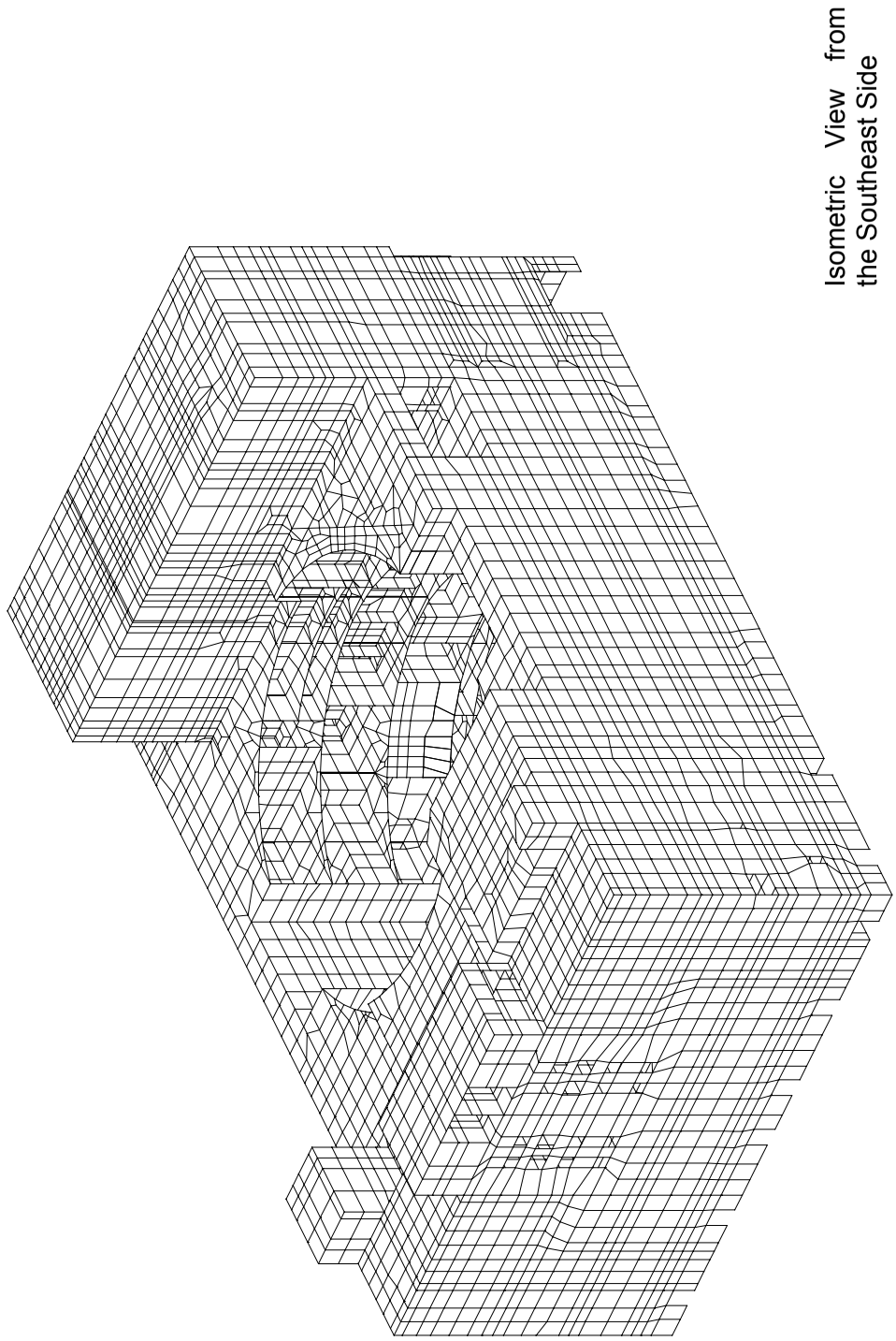

Figure 3.8.4-2 FE Model of R/B (Sheet 2 of 2)

~~Security-Related Information – Withhold Under 10 CFR 2.390~~

Figure 3.8.4-3 R/B Critical Sections
(Sheet 1 of 2)

~~Security-Related Information – Withhold Under 10 CFR 2.390~~

Figure 3.8.4-3 R/B Critical Sections
(Sheet 2 of 2)

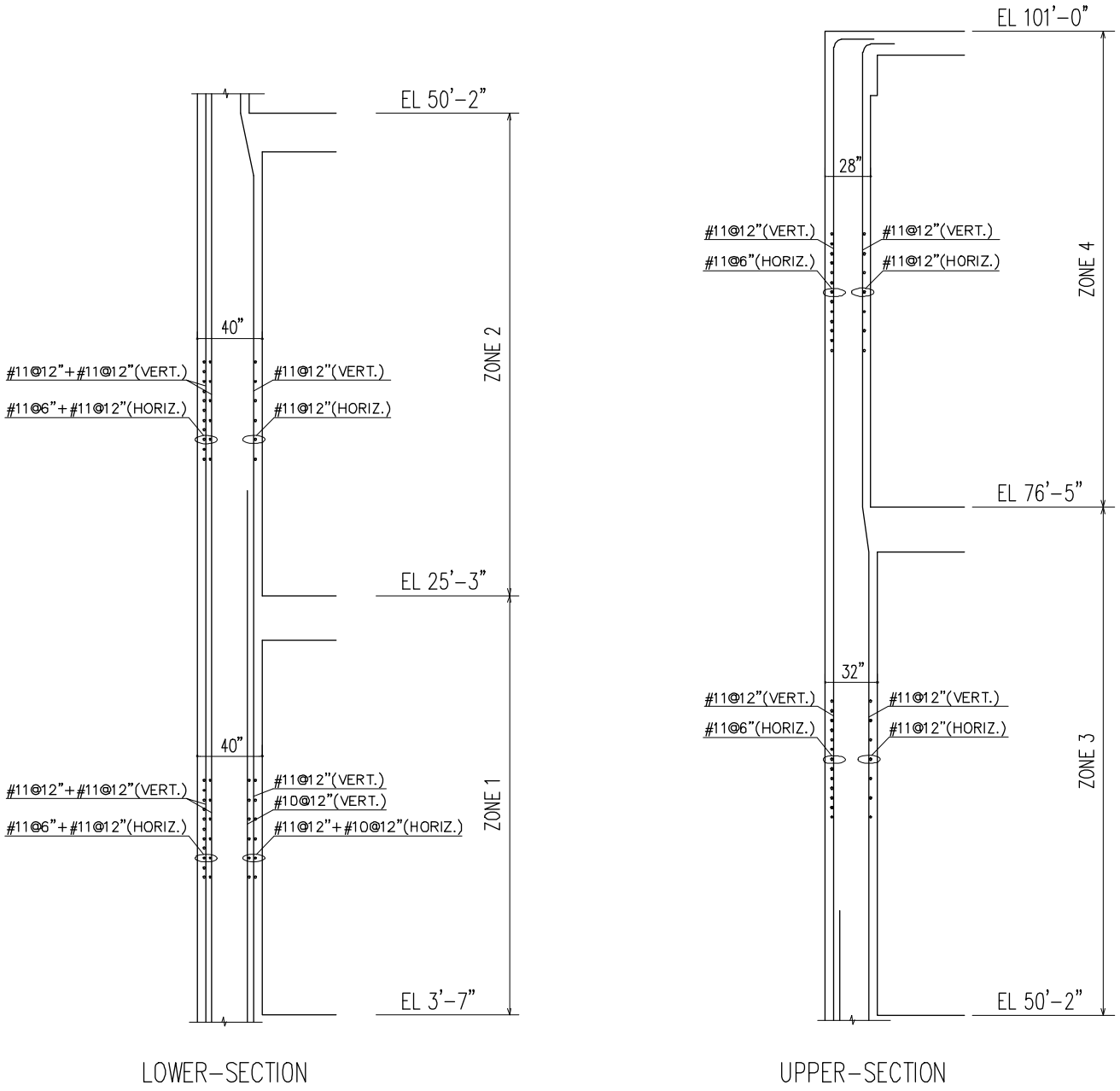

Figure 3.8.4-4 Typical Reinforcement in West Exterior Wall – SECTION 1

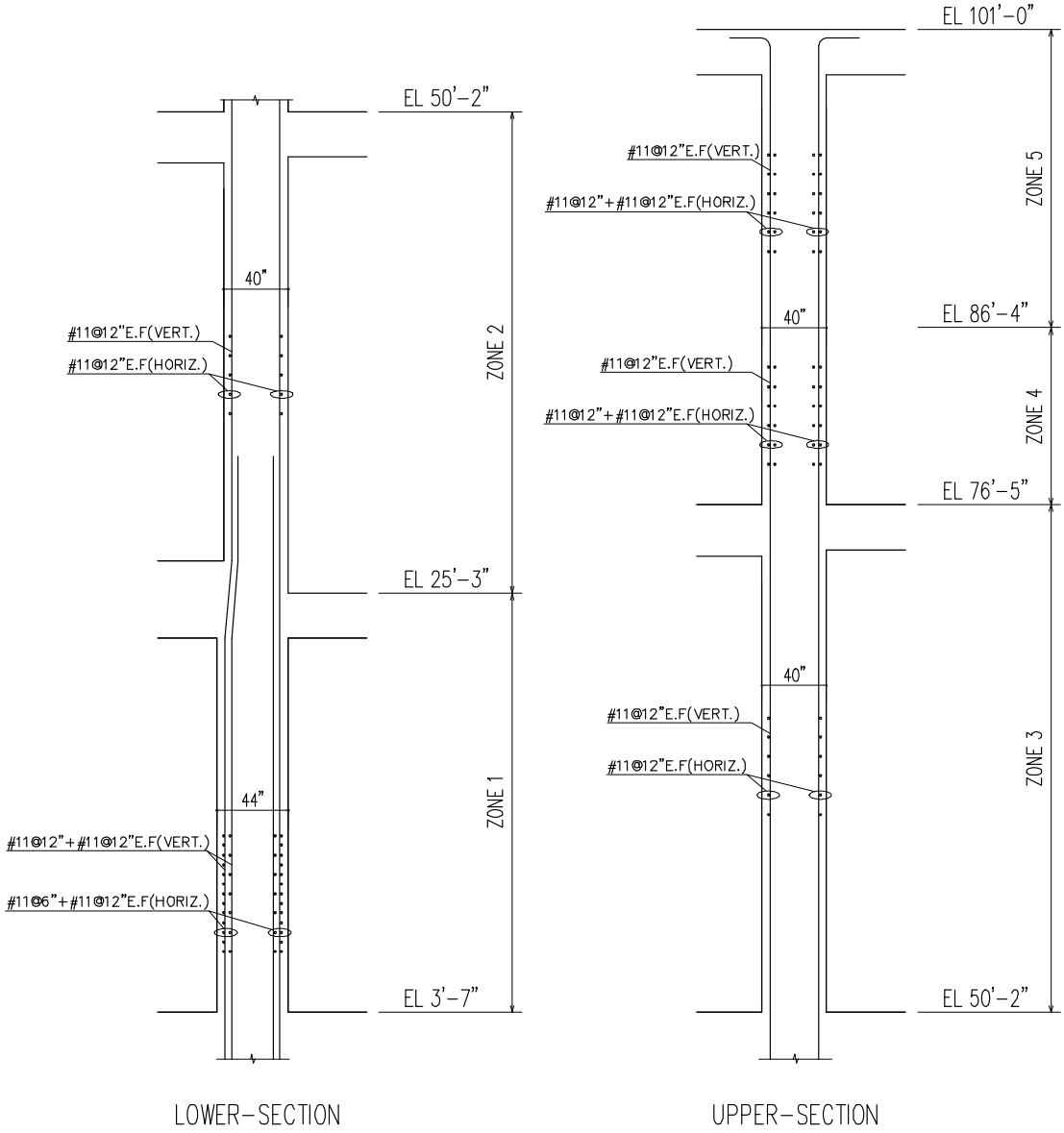

Figure 3.8.4-5 Typical Reinforcement in South Interior Wall – SECTION 2

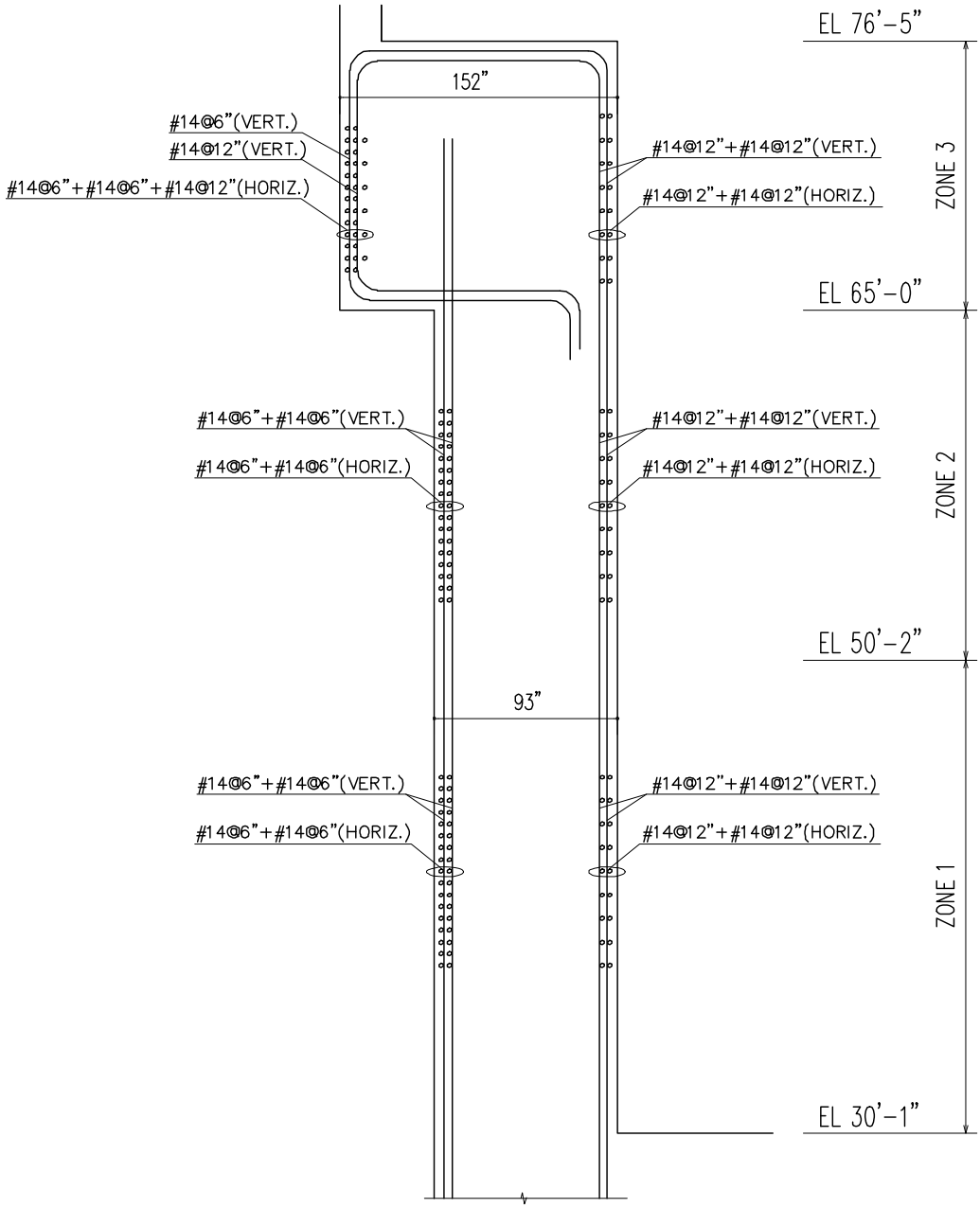

Figure 3.8.4-6 Typical Reinforcement in North Exterior Wall of Spent Fuel Pit – SECTION 3

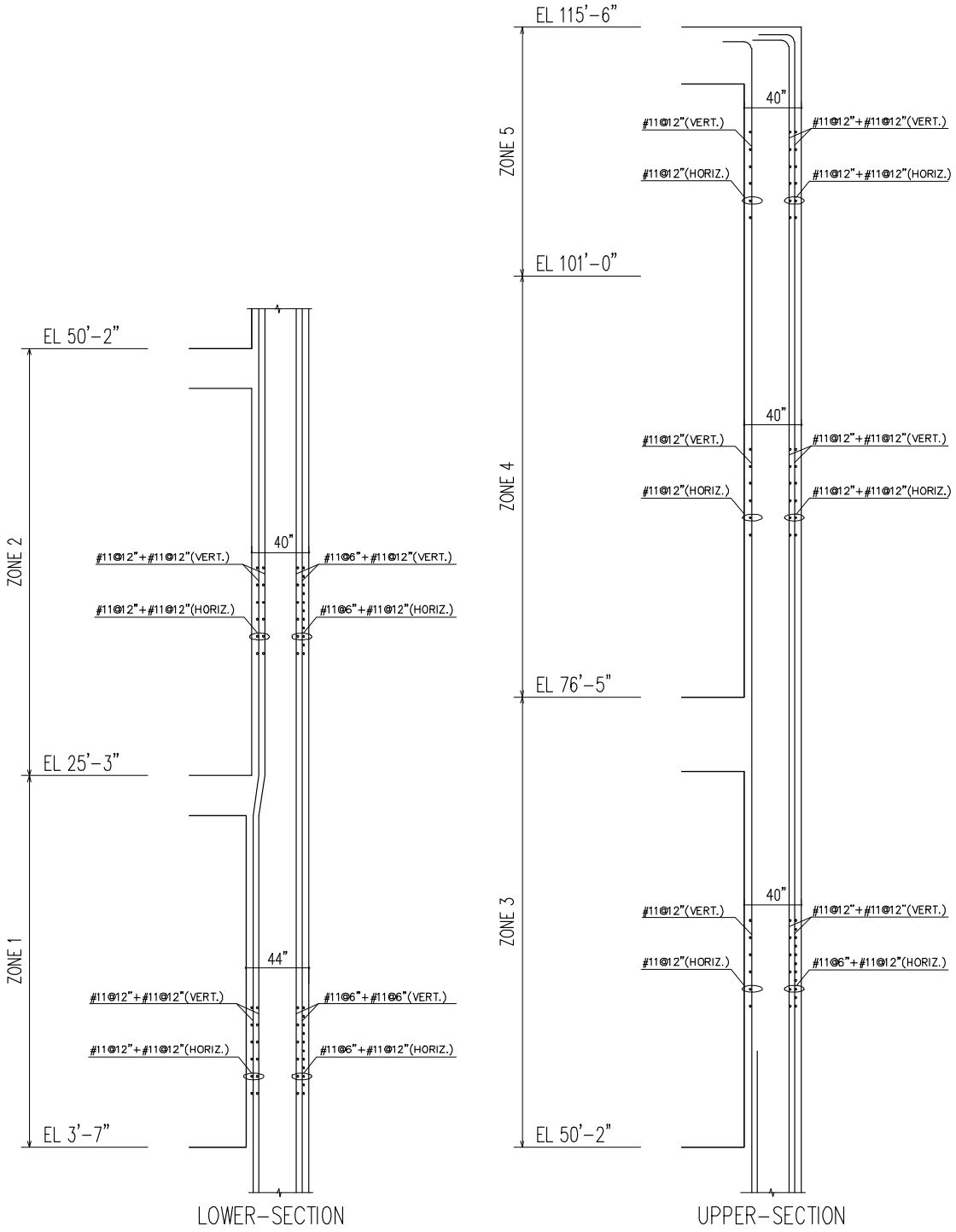

Figure 3.8.4-7 Typical Reinforcement in South Exterior Wall – SECTION 4

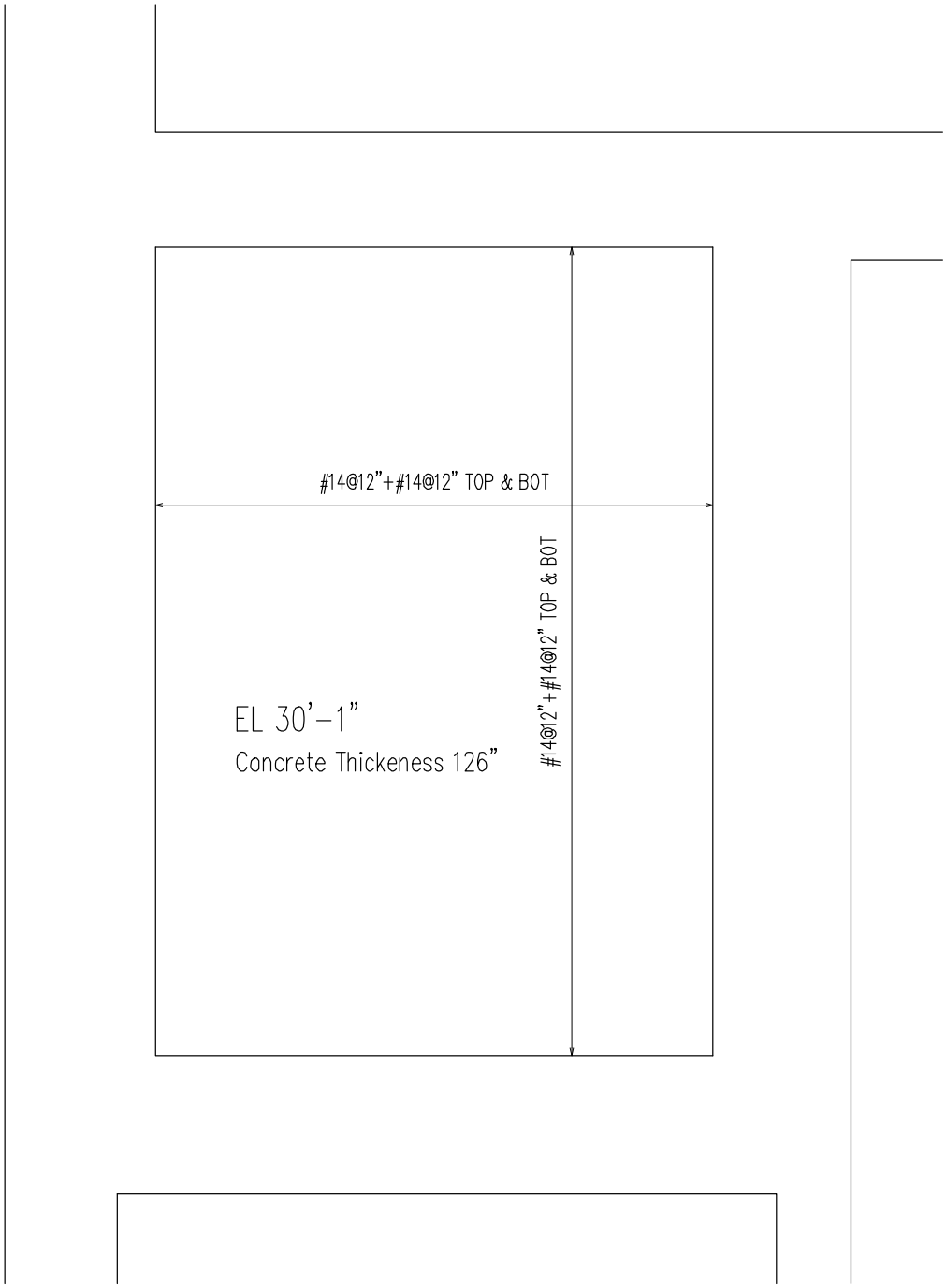

Figure 3.8.4-8 Typical Reinforcement in Spent Fuel Pit Slab – AREA 3

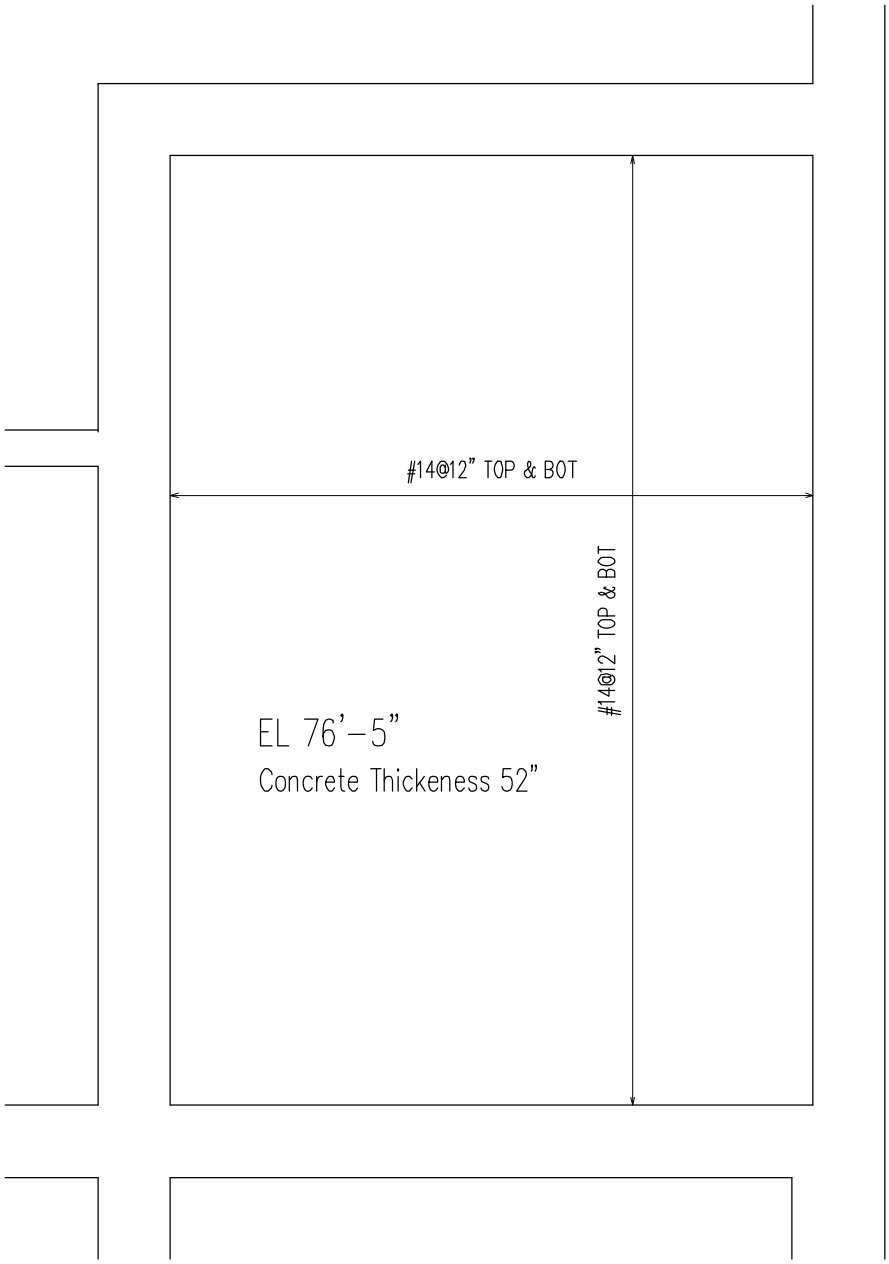

Figure 3.8.4-9 Typical Reinforcement in Emergency Feedwater Pit Slab – AREA 4

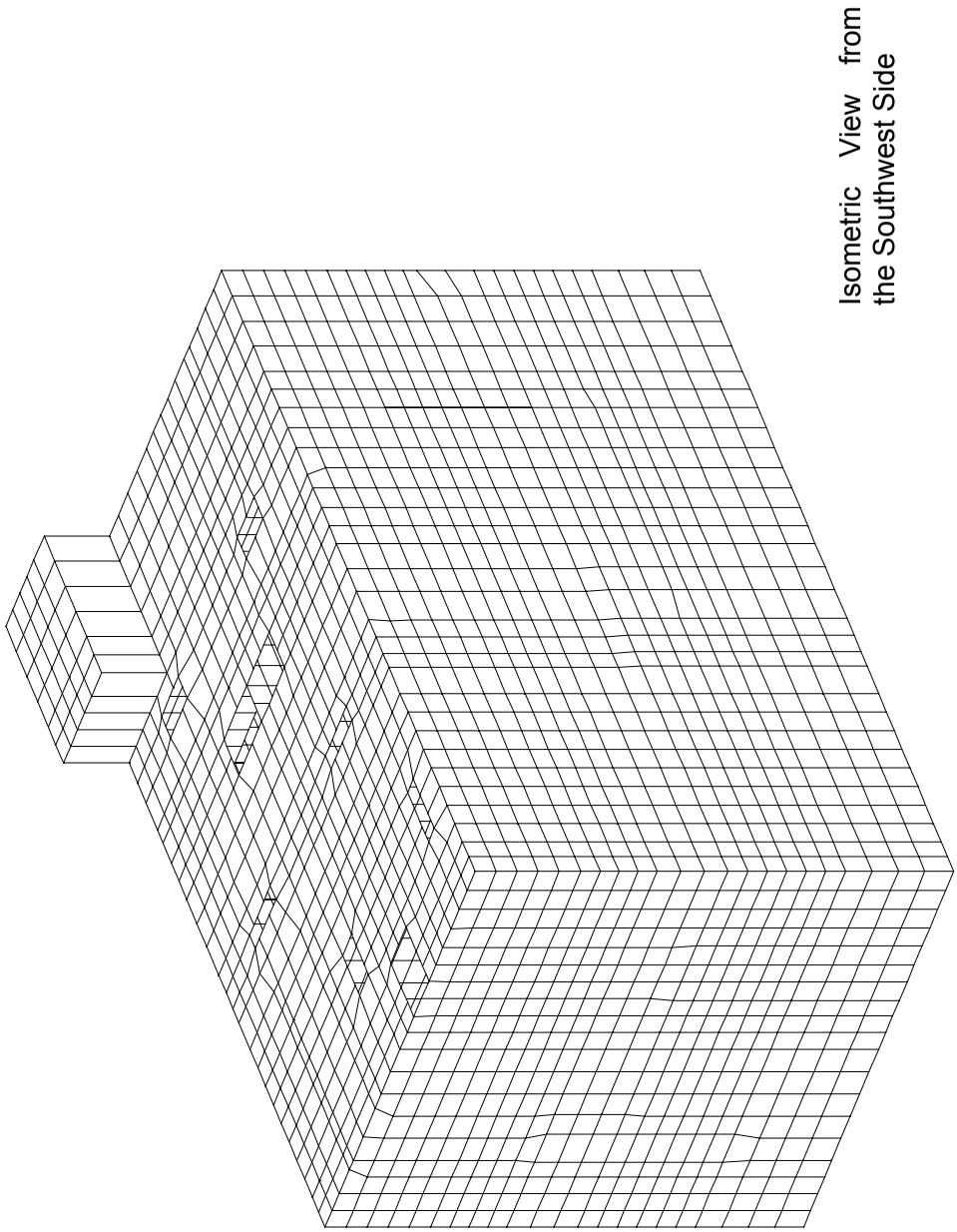

Figure 3.8.4-10 FE Model of West PS/B (Sheet 1 of 2)

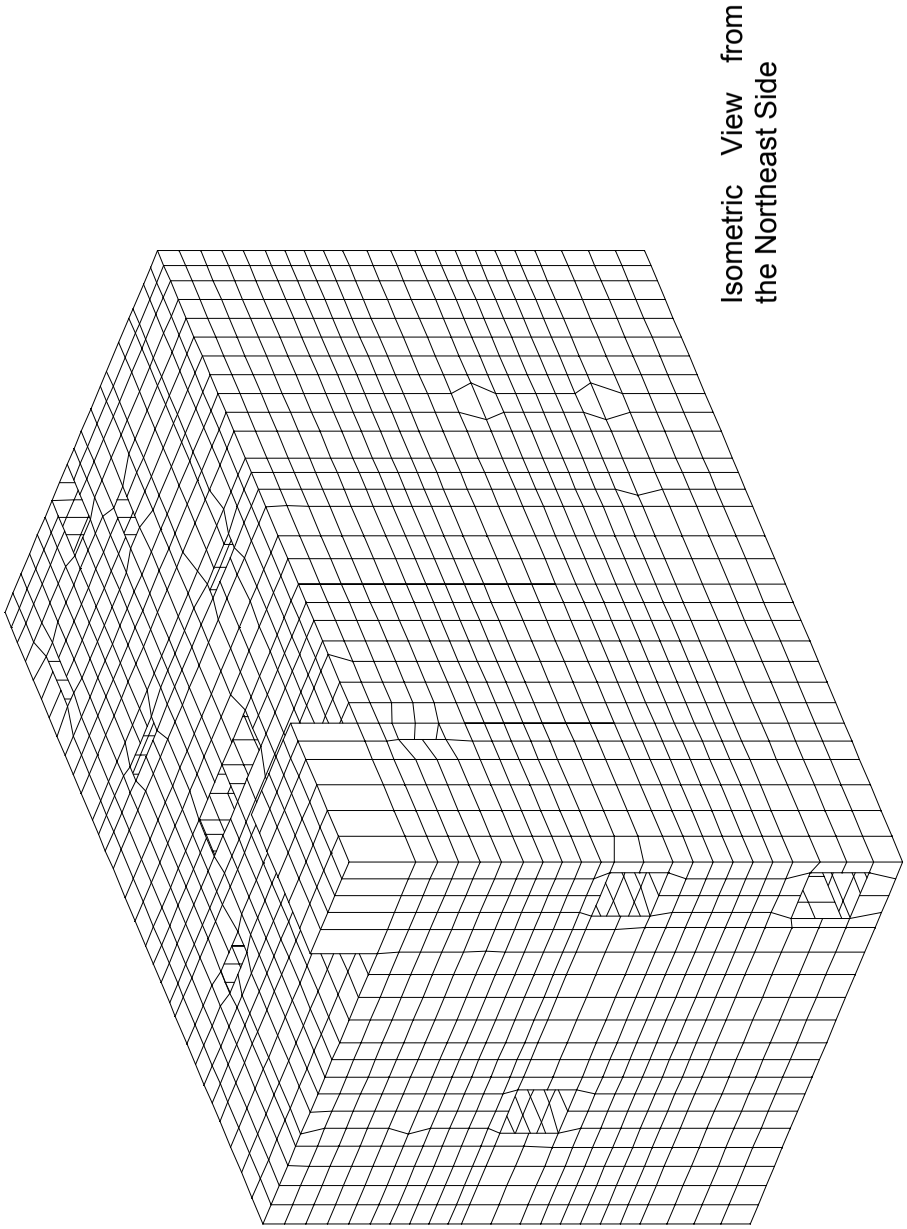

Figure 3.8.4-10 FE Model of West PS/B (Sheet 2 of 2)

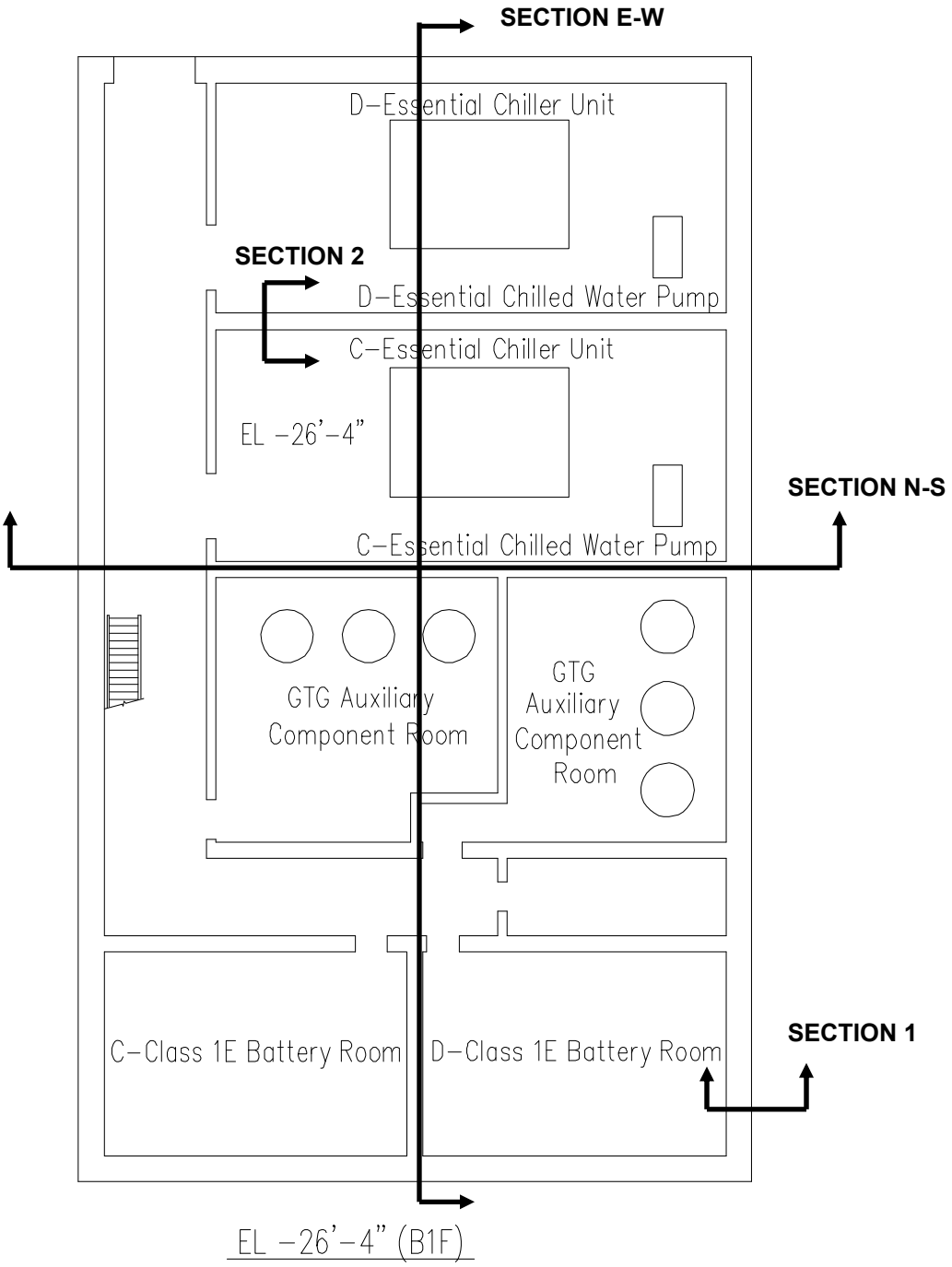

Figure 3.8.4-11 West PS/B Basemat and Wall Critical Sections (Floor Plan of B1F , EL-26'-4")

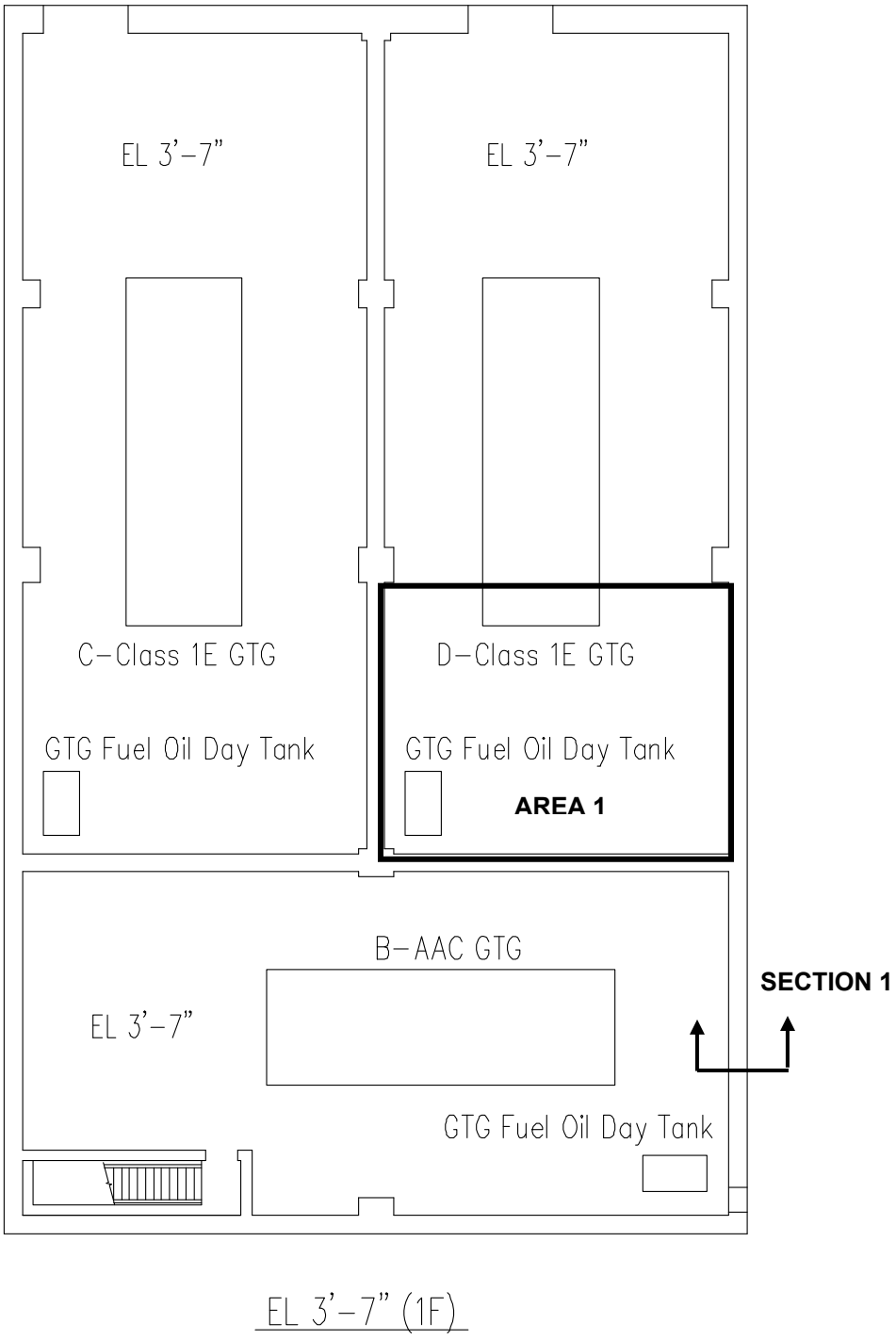

Figure 3.8.4-12 West PS/B Wall and Slab Critical Sections (Floor Plan of 1F , EL 3'-7")

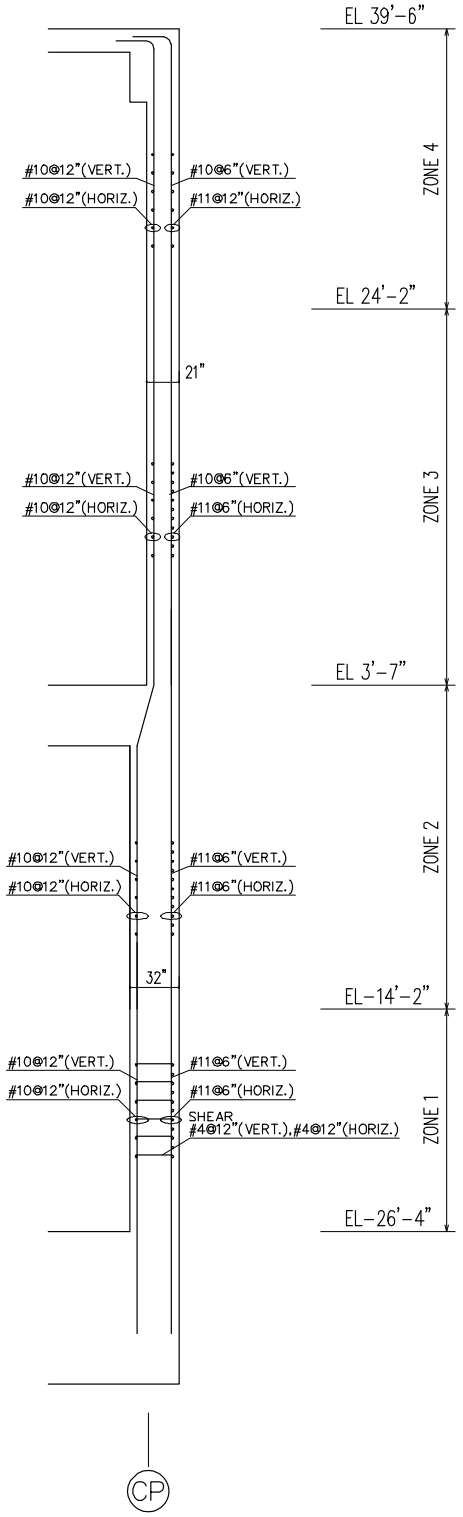

Figure 3.8.4-13 Typical Reinforcement in South Exterior Wall – SECTION 1 (On Column Line CP and Between Column Lines 1P & 2P)

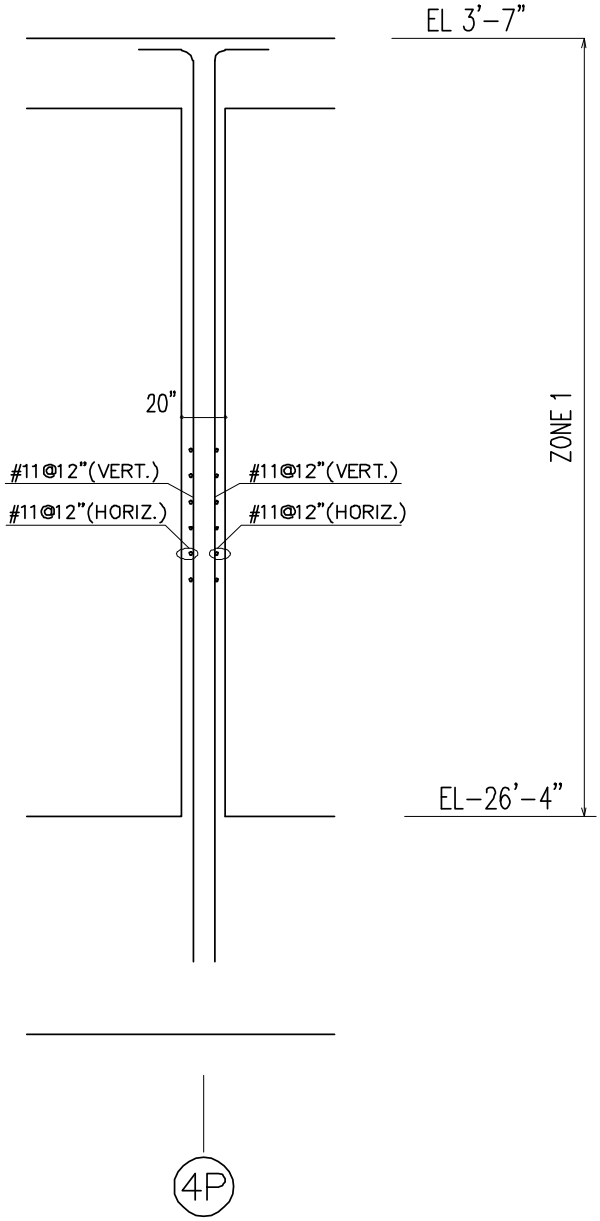

Figure 3.8.4-14 Typical Reinforcement in Interior Wall – SECTION 2 (On Column Line 4P and Between Column Lines BP & CP)

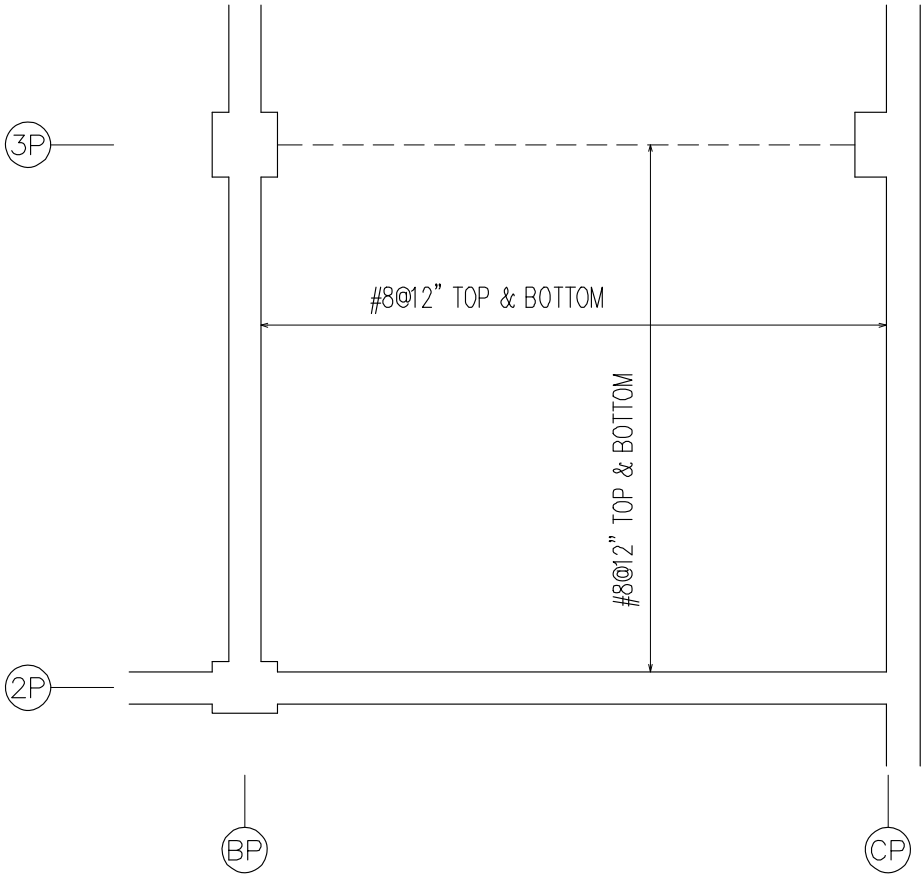

Figure 3.8.4-15 Typical Reinforcement in Floor at Elevation 3′-7″– AREA 1 (Between Column Lines BP & CP - 2P & 3P)

~~Security Related Information – Withhold Under 10 CFR 2.390~~

Figure 3.8.5-1 Floor Plan of 1F (El. -3'-7")

~~Security Related Information – Withhold Under 10 CFR 2.390~~

Figure 3.8.5-2 Cross Section of a North-South Orientation

~~Security Related Information – Withhold Under 10 CFR 2.390~~

Figure 3.8.5-3 Cross Section of an East-West Orientation

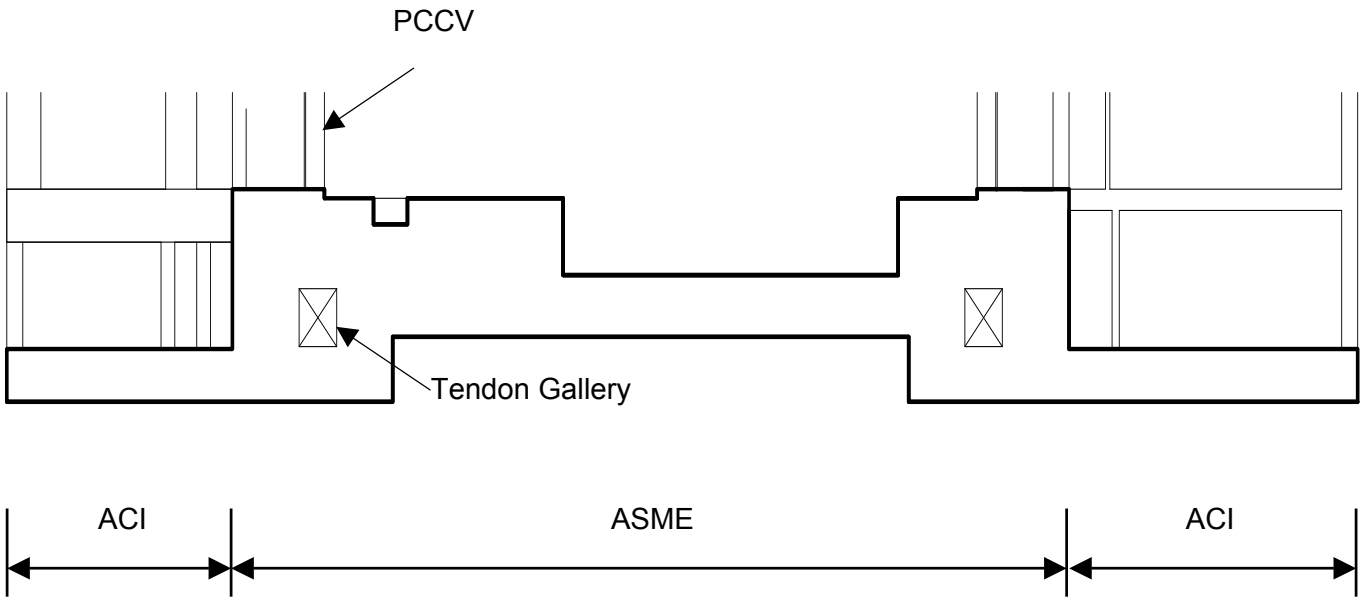

Figure 3.8.5-4 Applicable Codes and Their Region of Application

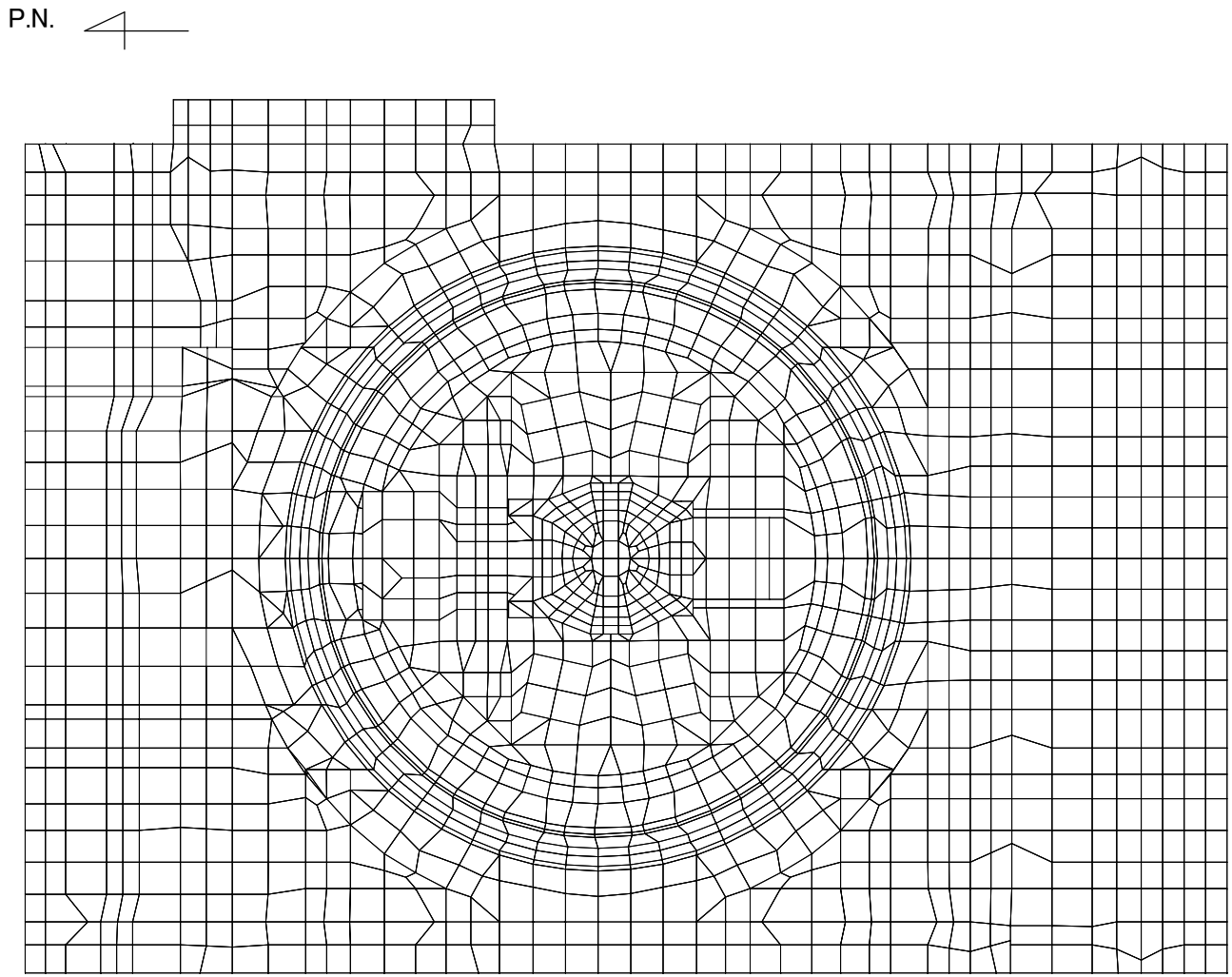

Figure 3.8.5-5 R/B, PCCV, and Containment Internal Structure Basemat Foundation

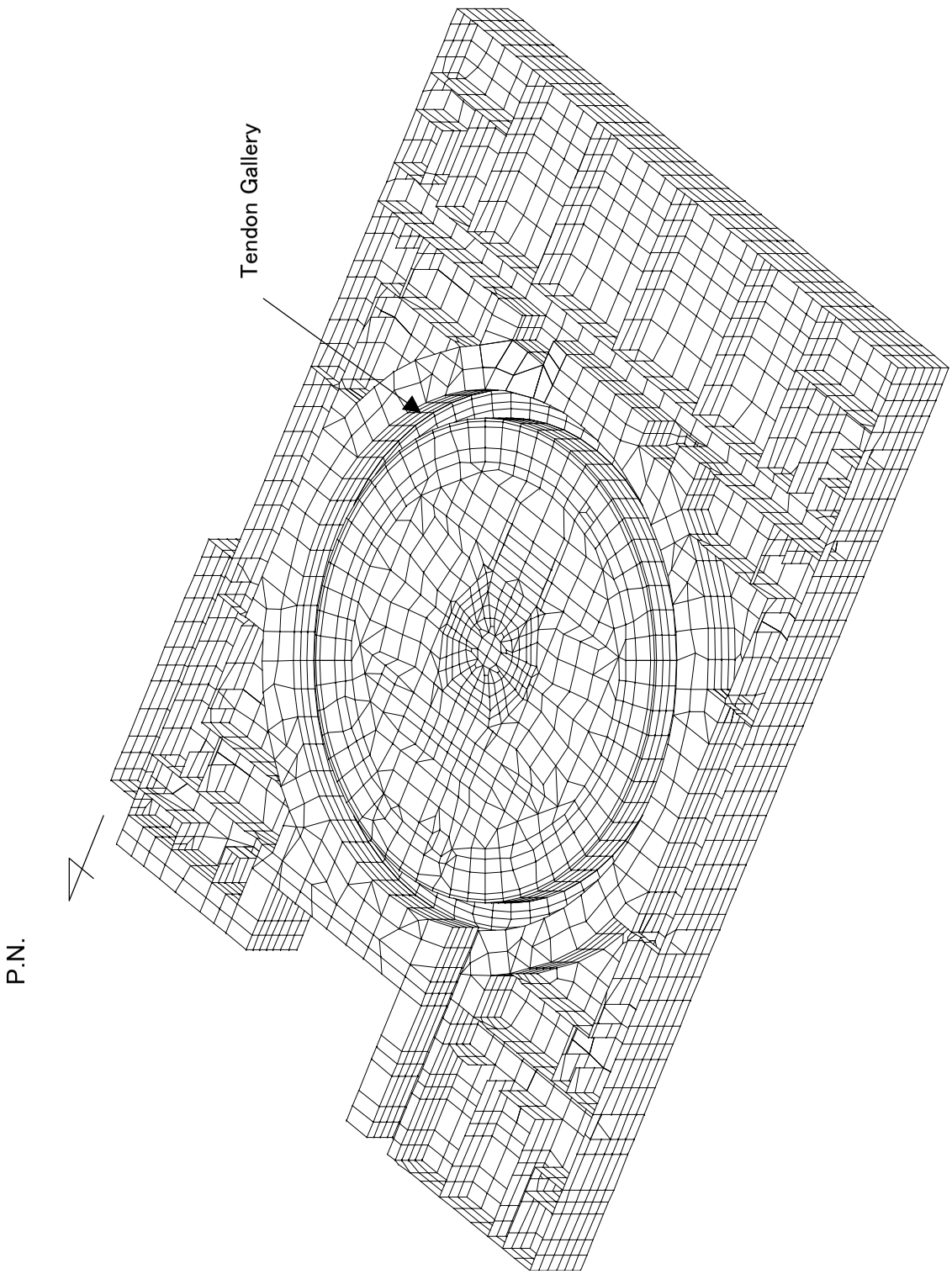

Figure 3.8.5-6 Global Three-Dimensional FE Model of R/B, PCCV, and Containment Internal Structure Basemat

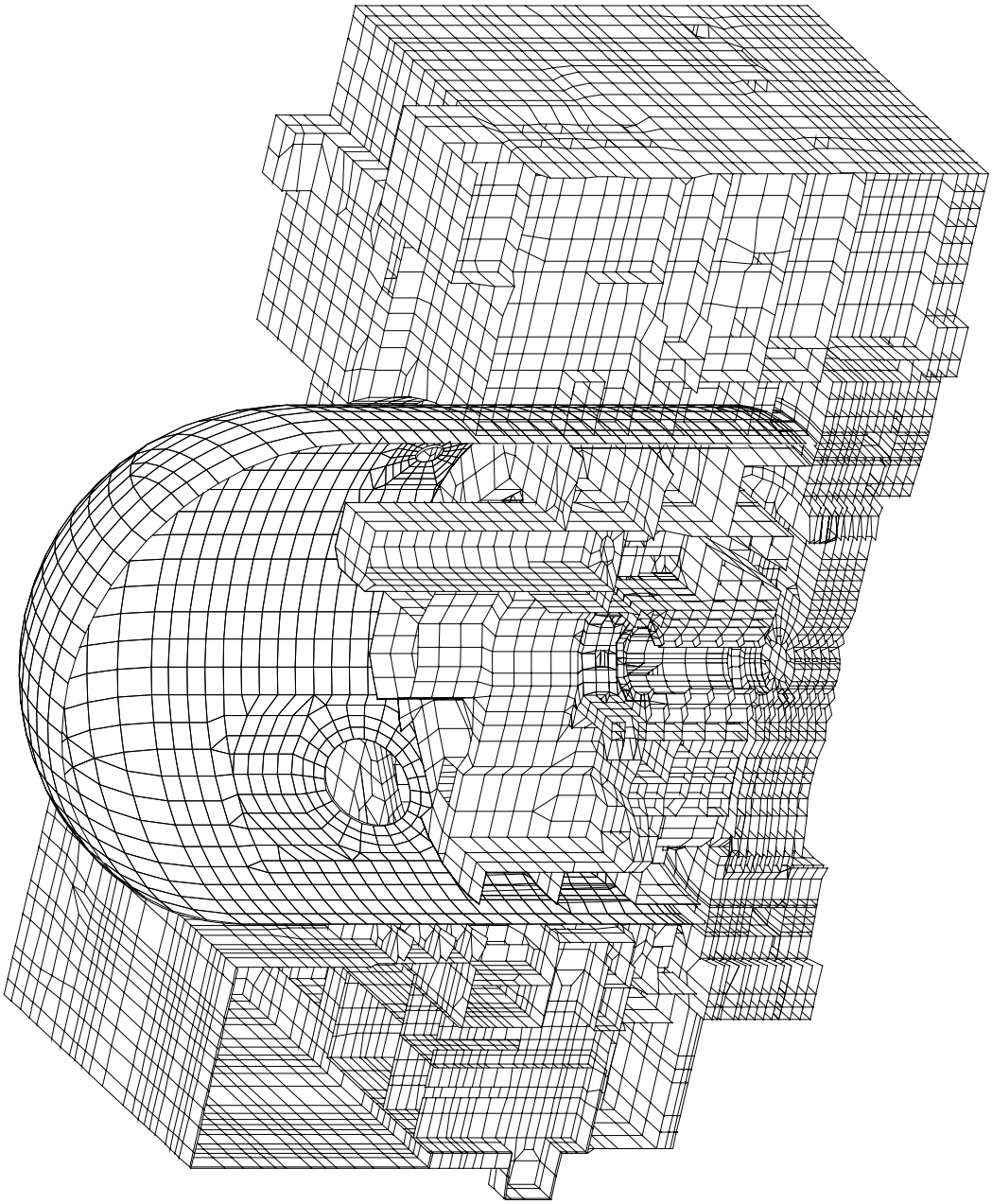

Figure 3.8.5-7 Global Three-Dimensional FE Model of R/B, PCCV, and Containment Internal Structure (N-S Section)

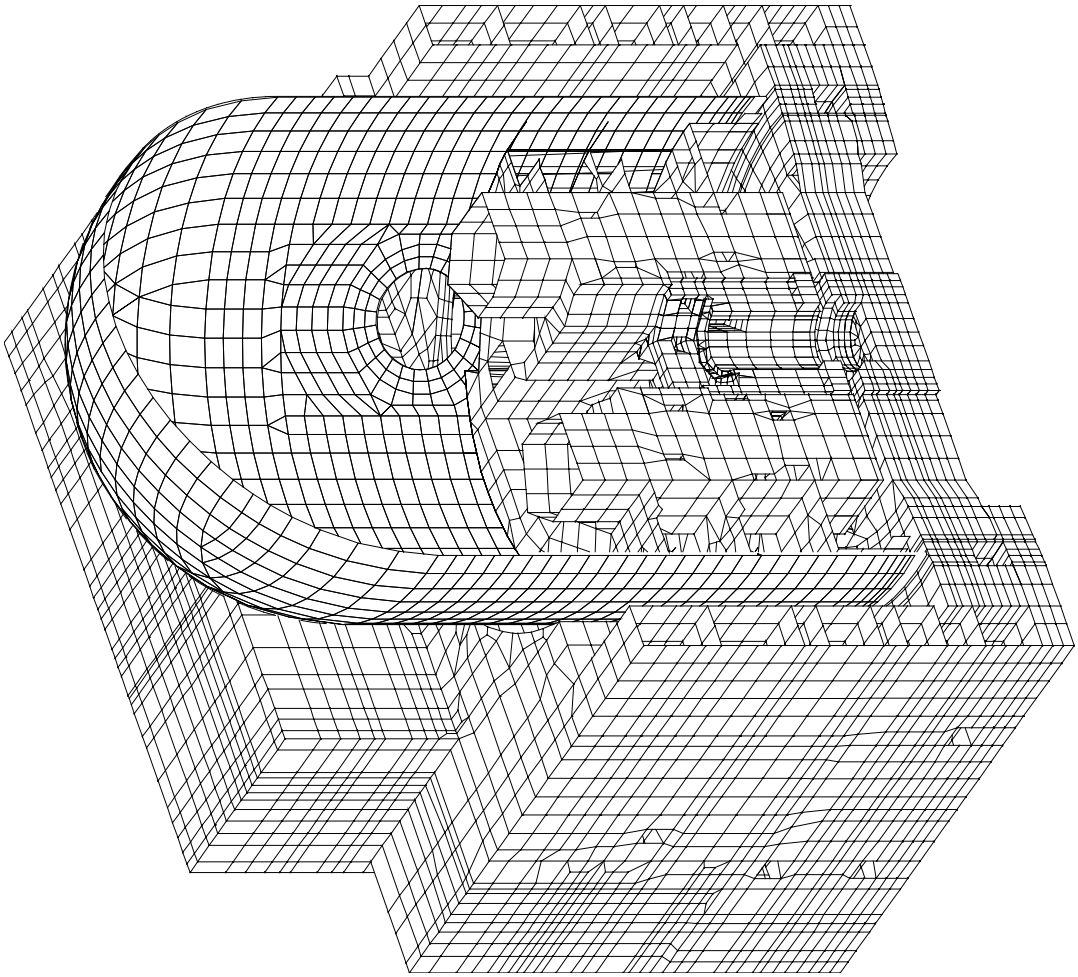

Figure 3.8.5-8 Global Three-Dimensional FE Model of R/B, PCCV, and Containment Internal Structure (E-W Section)

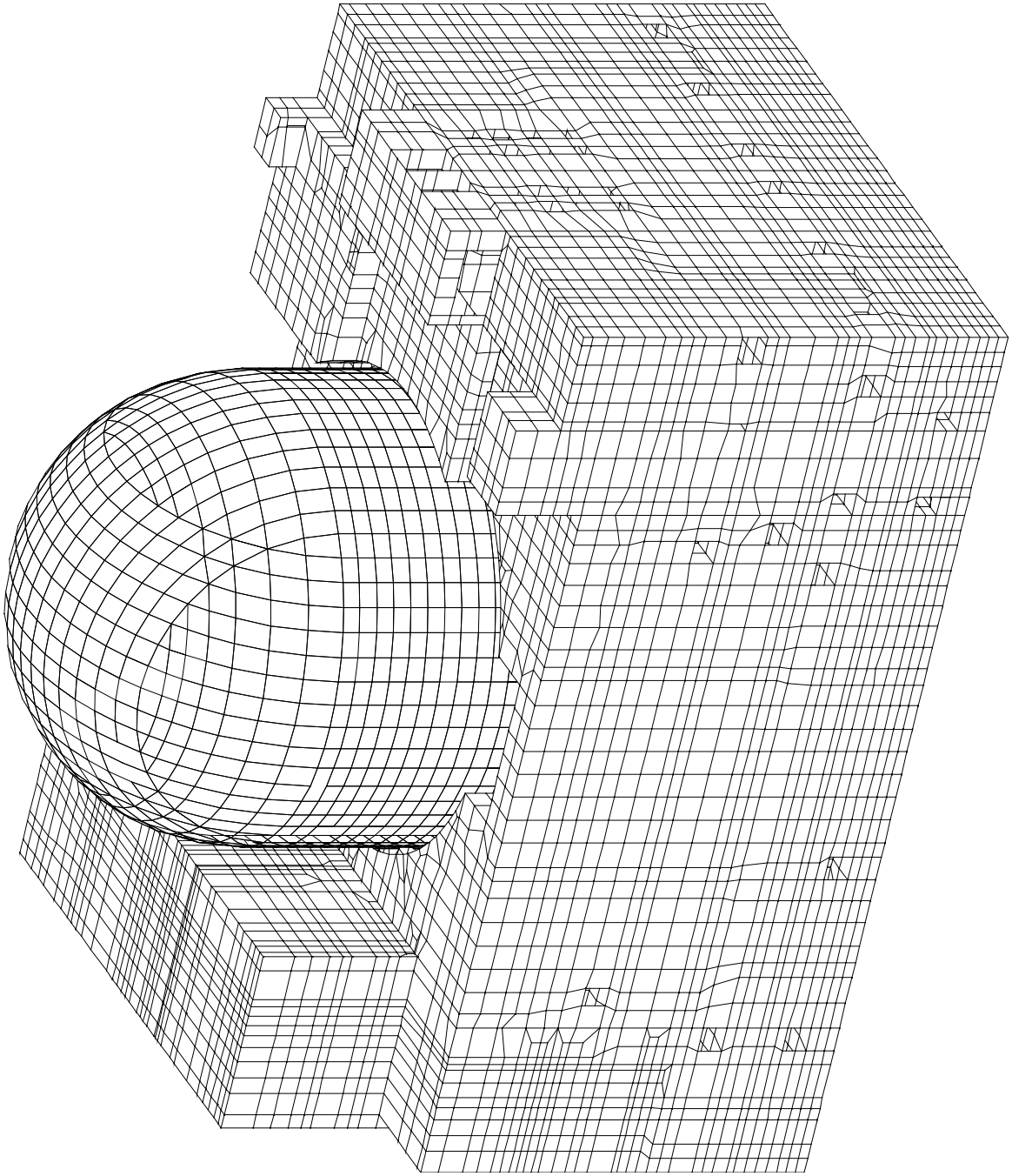

Figure 3.8.5-9 Global Three-Dimensional FE Model of R/B, PCCV, and Containment Internal Structure (West Side)

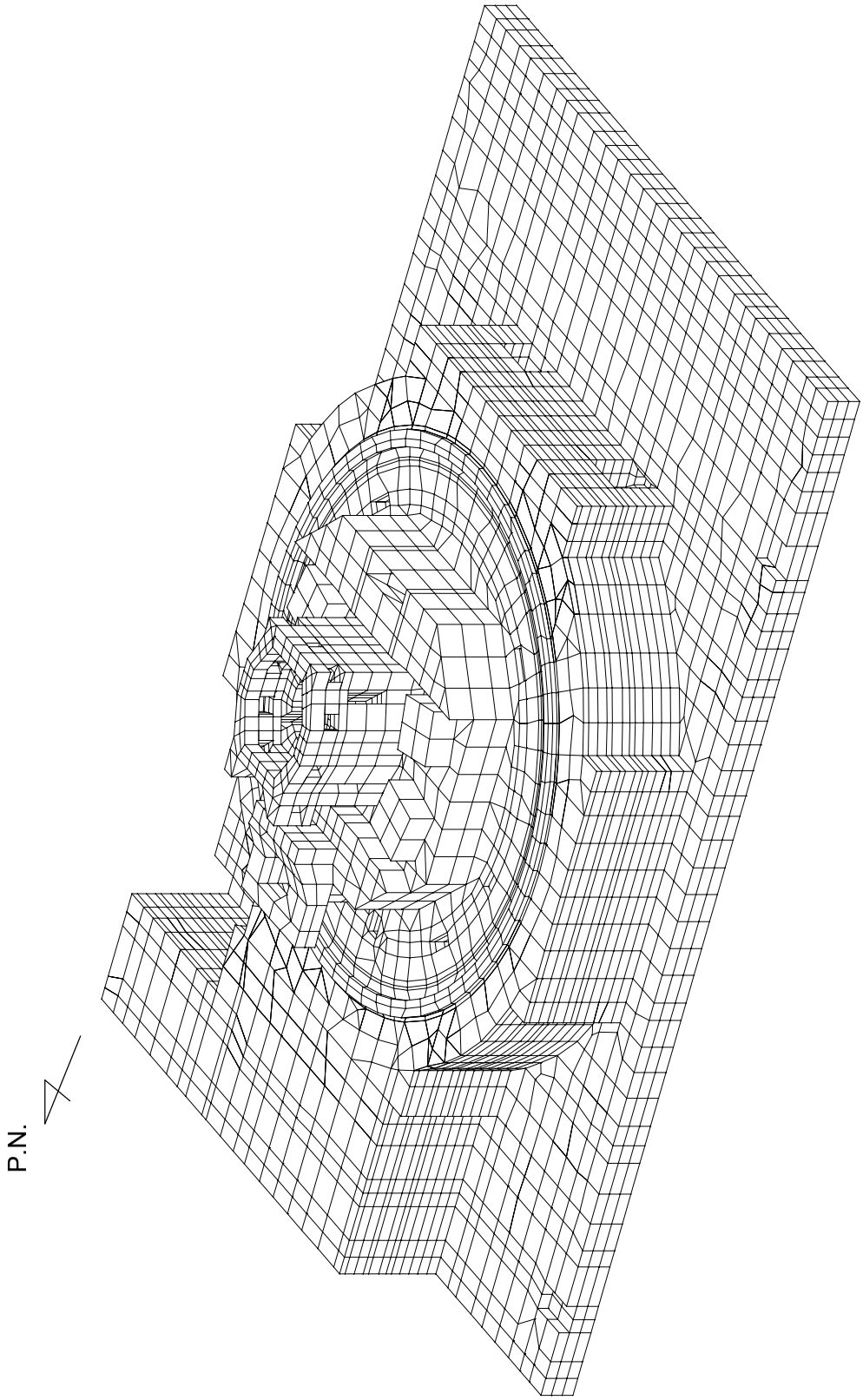

Figure 3.8.5-10 Global Three-Dimensional FE Model of R/B, PCCV, and Containment Internal Structure (Solid Elements)

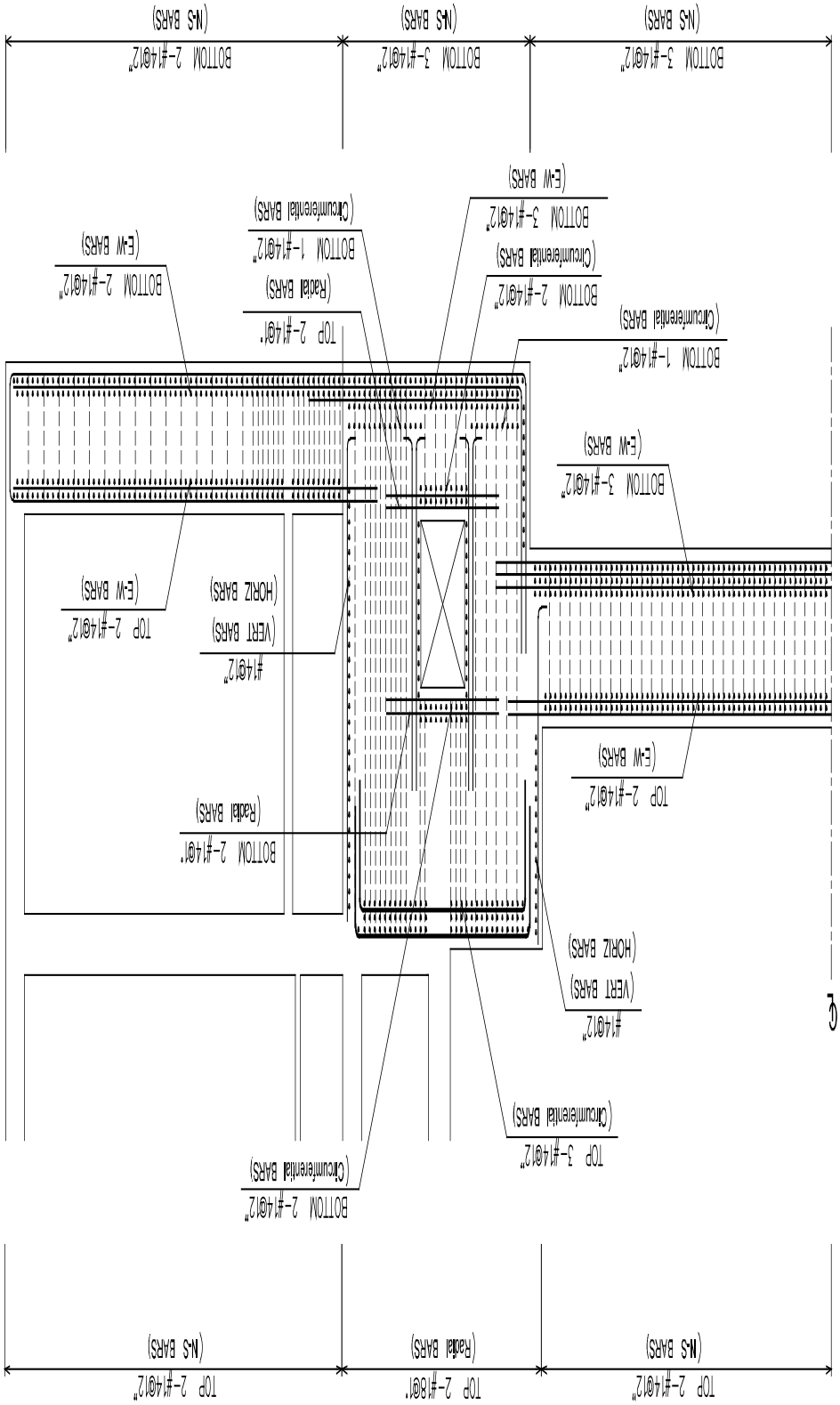

Figure 3.8.5-11 Reinforcing Steel of Basemat: SECTION N-S

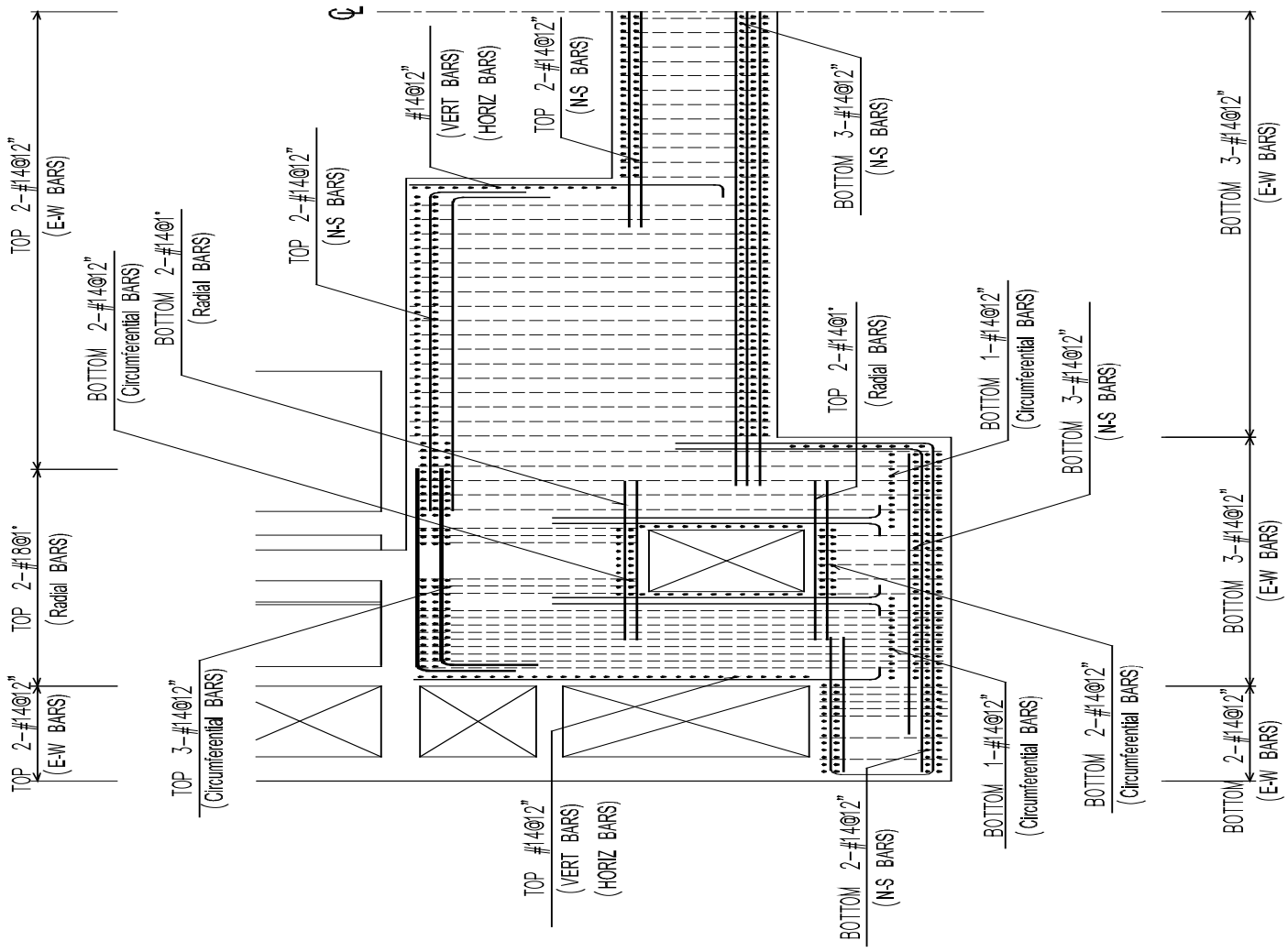

Figure 3.8.5-12 Reinforcing Steel of Basemat: SECTION E-W

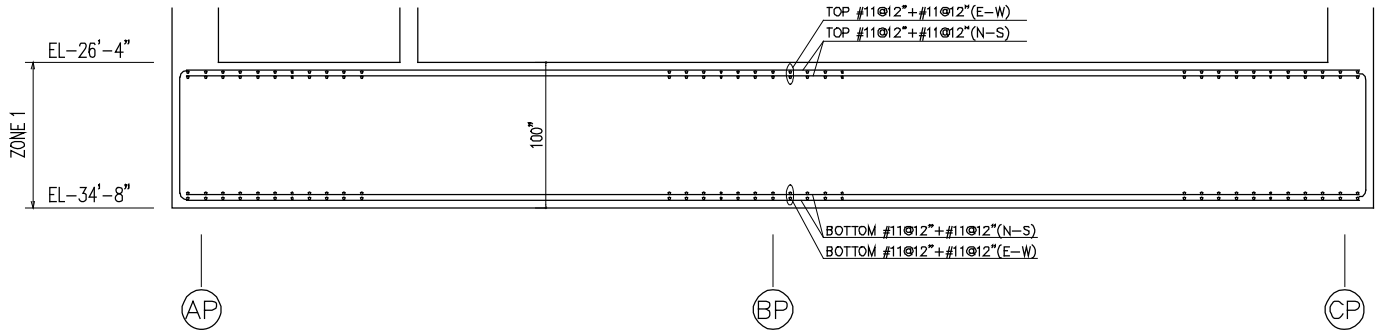

SECTION N-S

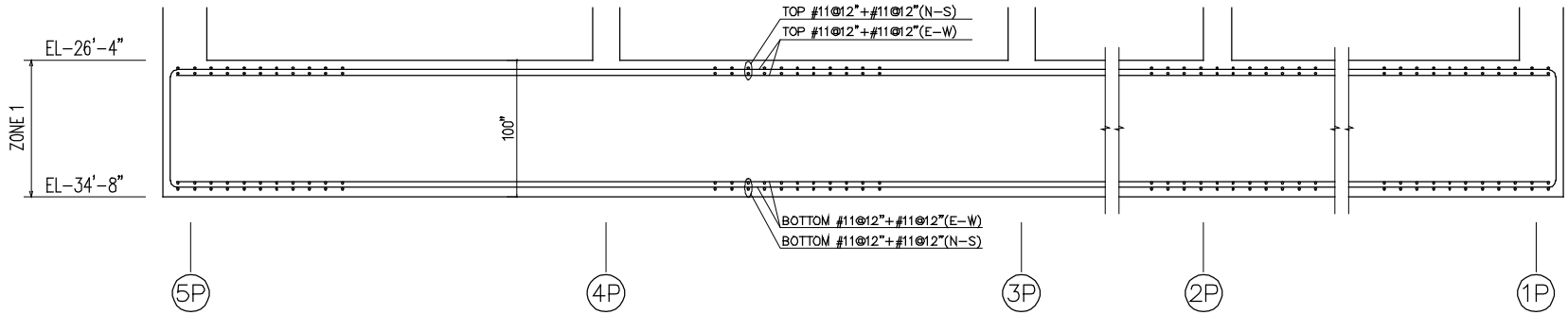

SECTION E-W

Figure 3.8.5-13 Typical Reinforcement in PS/B Basemats

3.9 Mechanical Systems[1] and Components

3.9.1 Special Topics for Mechanical Components

This section provides information on methods of analysis for seismic category I components and supports, including both those designed as ASME Boiler and Pressure Vessel Code ("the Code" [Reference 3.9-1]), Section III, Division 1, Class 1, 2, 3, or core support and those not covered by the Code. Information on design transients for ASME Code, Section III, Class 1 and core support components and supports is also provided.

3.9.1.1 Design Transients

In order to assure high quality for the component and piping in the RCS, the transient conditions selected for equipment design evaluation are based on the conservative estimates of the magnitude and frequency of the temperature and pressure transients resulting from various operating conditions in the plant. To a large extent, the specific transients considered for design are based on engineering judgment and experience.

The design transients give fluid system pressure, temperature, flow transients, and frequency for equipment fatigue analysis and stress analysis, and these do not cover the seismic loading and other mechanical loading on each component. Seismic loading and other mechanical loading are described in Subsection 3.9.3. Subsection 3.9.1 addresses the design transient item of each service and test condition, with its explanation and occurrence numbers. The 60 year design life is considered when determining the number of occurrences of each transient. The detail of design transient is described in the Technical Report (Reference 3.9-57).

Components are evaluated using the design transients in accordance with the requirements for Class 1 in ASME Code, Section III (Reference 3.9-1).

ASME Code, Section III (Reference 3.9-1) defines the following five conditions which apply to the design of RCS Class 1 components, auxiliary Class 1 components, RCS component supports, and reactor internals.

Level A Service Conditions – (Normal Conditions)

These conditions include any condition in the course of system startup, operation in the design power range, hot standby, and system shutdown other than Level B, Level C, or Level D service conditions or testing conditions. Tests, in which pressure is not greater than the component design pressure, are considered to be normal condition design transients.

Level B Service Conditions – (Upset Conditions, Incidents of Moderate Frequency)

These conditions include any deviations from Level A service conditions anticipated to occur often enough that the design includes the capability to withstand the conditions without operational impairment. The Level B service conditions include those transients

[1] Section 4.2 of the FSAR addresses fuel system design information.

resulting from any single operator error or control malfunction, transients caused by a fault in a system component requiring its isolation from the system, and transients due to a loss of load or power. Level B service conditions include any abnormal incidents not resulting in a forced outage and also forced outages for which the corrective action does not include any repair of mechanical damage. The estimated duration of Level B service condition is included in the design specifications.

Level C Service Conditions – (Emergency Conditions, Infrequent Incidents)

These conditions include those deviations from Level A service conditions that require shutdown for correction of the conditions or repair of damage. These conditions have a low probability of occurrence but are included to establish that no gross loss of structural integrity will result as a concurrent effect of any damage developed in a system. The postulated occurrences for such events which result in more than 25 strong stress cycles are evaluated for cyclic fatigue using Level B service limits. Strong stress cycles are those having an alternating stress intensity value greater than that for 10^6 cycles from the applicable fatigue design curves.

Level D Service Conditions – (Faulted Conditions, Limiting Faults)

These conditions include those combinations of conditions associated with extremely low-probability postulated events whose consequences are such that the integrity and operability of the nuclear energy system may be impaired to the extent that considerations of public health and safety are involved. Such considerations require compliance with safety criteria as may be specified by regulatory authorities.

Testing Conditions

Testing conditions are those pressure overload tests that include primary and secondary hydrostatic tests and SG tube leak tests specified. Other types of tests are classified under one of the other service condition categories.

The design transient selected is also considered the plant condition (PC) categorization and frequency in ANS N51.1 (Reference 3.9-2), but the frequency in some cases is different from ANS N51.1 (Reference 3.9-2).

The design transients and the number of occurrences for fatigue analysis of components are shown in Table 3.9-1.

The effect of thermal stratification and thermal striping is considered in the stress and fatigue evaluation of components and piping. The requirements in the NRC Bulletins 88-08, 88-11 (References 3.9-3, 3.9-4) and other applicable design standards are considered in this evaluation.

3.9.1.1.1 Level A Service Conditions (Normal Conditions)

The RCS transients under normal operating transients (PC-1 in accordance with ANS N51.1 [Reference 3.9-2]) are considered as follows:

- RCP startup and shutdown
- Plant heat-up and cooldown

- Ramp load increase and decrease between 0 and 15% of full power
- Ramp load increase and decrease at 5% of full power per minute
  - Ramp load increase and decrease between 15% and 100% of full power (5% of full power per minute)
  - Ramp load increase and decrease between 50% and 100% of full power (5% of full power per minute)
- Step load increase and decrease of 10% of full power
- Large step load decrease with turbine bypass
- Steady-state fluctuations and load regulation
- Boron concentration equalization
- Main Feedwater cycling
- Core lifetime extension
- Refueling
- Turbine roll test
- Primary leakage test
- Secondary leakage test

3.9.1.1.1.1 RCP Startup and Shutdown

The RCPs are started at the beginning of heat-up and stopped at the end of cooldown, and including recovery from some transients, such as a loss of power.

When the RCP is started and stopped, it is assumed that variations in temperature on the RCS primary side, and variations in pressure and temperature in the pressurizer, are negligible. Temperature and pressure changes in the SG secondary side are also assumed negligible. The only significant variables are the primary system flow and the pressure changes resulting from the pump's operations.

The following cases are represented for this transient:

- Case 1 – First Pump Startup

  This case represents the variations in the RCL flow that accompany the startup of the first pump. This case results in a higher dynamic pressure loss in the loop containing the starting pump, but the magnitude of the flow change is less than in Case 2.

- Case 2 – Last Pump Startup

  This case shows the variations in the RCL flow that accompany the startup of the fourth pump. Initially, flow exists through this pump in the reverse direction as the result of operating the other pumps.

This transient is assumed to occur 3,000 times during the plant design life.

3.9.1.1.1.2 Plant Heat-up and Cooldown

Plant heat-up operations are conservatively represented by uniform ramp temperature changes of 50°F per hour which bounds the heat-up rate resulting from operation of four RCPs. The heat-up begins from ambient temperature and ends at the no-load temperature. For the pressurizer vessel, the heat-up rate is 100°F per hour.

Plant cooldown operations are conservatively represented by uniform ramp temperature changes of 100°F per hour, which rate bounds the cooldown rate resulting from the steam dump system and RHRS.

The cooldown begins from a no-load temperature and ends at an ambient temperature. For the pressurizer vessel, the cooldown rate is 200°F per hour.

Plant heat-up and cooldown operations is assumed to each occur 120 times during the plant design life.

3.9.1.1.1.3 Ramp Load Increase and Decrease Between 0 and 15 Percent of Full Power

The ramp load increase and decrease transients between the 0 and 15% load are represented by continuous and uniform ramp steam load changes, requiring 30 minutes for load increase and five minutes for load decrease. During load increase, the reactor coolant temperatures are increased from their no-load values to their programmed temperature values at 15% load. During load decrease, the reactor coolant temperatures are decreased from the programmed temperature values at 15% load to the no-load values.

These transients are assumed to each occur 600 times during the plant design life.

3.9.1.1.1.4 Ramp Load Increase and Decrease at Five Percent of Full Power per Minute

The ramp load increase and decrease operations are assumed to be two cases. The first case is the uniform ramp power changes of 5% per minute between the 15% and 100% power. The other case is the uniform ramp power changes of 5% per minute between the 50% and 100% power.

- Load increase and decrease between 15% and 100%

  This is the maximum load change under automatic reactor control. The reactor coolant temperature changes according to the programmed temperature based on the load. This transient is assumed to occur 600 times during the plant design life.

- Load increase and decrease between 50% and 100%

This load change is based on the daily load follow operation which varies between 50% and 100% power, and requires the boron concentration change in the reactor coolant.

The reactor coolant temperature changes according to the programmed temperature based on the load. This transient is assumed to occur 19,200 times during the plant design life.

3.9.1.1.1.5 Step Load Increase and Decrease of 10 Percent of Full Power

A 10% step change in the load demand is assumed to result from a change in the turbine control valve due to disturbances in the electrical network to which the plant output is connected. The RCS is designed to return to plant equilibrium without a reactor trip (RT) after a 10% step change in the turbine load demand initiated from the nuclear plant equilibrium conditions between 15% and 100% of full load (power range for automatic reactor control).

After a step load decrease in the turbine, the secondary-side steam pressure and temperature begin to increase. Then, the RCS average temperature and pressurizer pressure also increase. Because of the power mismatch between the reactor and the turbine, the coolant temperature increases, and the control system automatically inserts the control rods to reduce the core power. Then, the reactor coolant temperature decreases from its peak value to a value below its initial value. Pressurizer pressure also decreases from its peak value to a value with the reactor coolant decreasing temperature trend, then pressurizer heaters automatically operate to return the plant pressure to its nominal value.

After a step load increase in the turbine, the reverse transient occurs. The secondary-side steam pressure and temperature begin to decrease, and then the reactor coolant average temperature and pressure decrease. The control system automatically withdraws the control rods to increase the core power.

The decreasing pressure returns to its normal value by actuation of the pressurizer heaters. These transients are assumed to each occur 600 times during the plant design life.

3.9.1.1.1.6 Large Step Load Decrease with Turbine Bypass

This transient is assumed to occur with a large step decrease in the turbine load from full power resulting from a mismatch in power between reactor and turbine. This operation causes secondary-side turbine bypass actuation automatically in order to prevent a RT and the opening of the main steam safety valve. Following the large step load decrease, the reactor power is reduced at a controlled rate by inserting the control rods. A step load change to house load without a RT is applied to the design. This transient is assumed to occur 60 times during the plant design life.

3.9.1.1.1.7 Steady-State Fluctuations and Load Regulation

Reactor coolant pressure and temperature are able to fluctuate during normal operation. For design purposes, two cases of fluctuations are considered in the design transient.

- Case 1 - Steady-state fluctuations

  This case represents the fluctuations without load regulation operation. This transient is assumed to occur 1×10^6 times during the plant design life.

- Case 2 – Load regulation

  This case represents the fluctuations with load regulation operation for grid frequency control. The frequency of fluctuation in RCS is large because of small and rapid fluctuations in load. This transient is assumed to occur 8×10^5 times during the plant design life.

The limiting case of load fluctuations is used for component evaluations.

3.9.1.1.1.8 Boron Concentration Equalization

After large change in boron concentration in the RCS because of a borating operation or a dilution operation, the pressurizer spray is operated in order to equalize the boron concentration between the RCL and the pressurizer. This equalizing operation can be performed by manually operating the pressurizer backup heaters. The pressure is maintained at 2,250 psia by spray and backup heater operation until the boron concentration is equalized. Since the change of boron concentration in the RCS occurs during daily load follow operation, it is assumed that this operation is assumed to be performed twice a day and the number of occurrences is 39,600. The operations result in no significant effects on the SG secondary side.

3.9.1.1.1.9 Main Feedwater Cycling

The main feedwater cycling is assumed to occur at hot standby or no-load condition. Relative small amounts of decay heat or RCP heat results in a low steam generation rate and slightly decreases the SG water level. To compensate for the decreasing level, the SGs are designed to be supplied continuously using the SG water filling control valves. However, the design transient of main feedwater cycling is assumed to supply the SG intermittently. This transient is assumed to occur every two hours at hot standby or no-load, and is assumed to occur 2,100 times during the plant design life.

3.9.1.1.1.10 Core Lifetime Extension

This transient is assumed to occur at the end of an operating cycle when the critical boron concentration is required to reach less than achievable, full thermal power condition. The method of core life extension is as follows.

- The RCS average temperature is decreased to below the normal programmed temperature; this results in adding reactivity to the core through the negative moderator temperature coefficient.
- The turbine is controlled with a full load until the turbine inlet valves are fully opened.

This transient is assumed to occur 60 times during the plant design life.

3.9.1.1.1.11 Refueling

After the temperature of the reactor coolant is decreased to 140°F at the end of the plant cooldown operations, the RV head is removed and the refueling canal is filled. The refueling water is supplied by the refueling water recirculation pump from the RWSP, which is assumed to be 32°F, into the RCS. The cold water at 32°F is assumed to flow directly to the RV through the reactor coolant piping. This transient is assumed to occur 60 times during the plant design life.

3.9.1.1.1.12 Turbine Roll Test

This transient occurs during the required check of the turbine cycle during hot functional testing. The RCP is used to heat the reactor coolant to the operating temperature (no-load conditions), and the SG is used to perform a turbine roll test. The plant cooldown rate during this test exceeds the 100°F per hour design rate. This transient is assumed to occur 10 times during the plant design life.

3.9.1.1.1.13 Primary-Side Leakage Test

A primary-side leakage test is performed after opening of the RCS. During this test, the primary system pressure is raised to 2,500 psia (i.e., design pressure) and the system temperature above the minimum temperature given by the RV material ductility requirements, and then the system is inspected to establish that a leak does not occur. This transient is assumed to occur 120 times during the plant design life.

3.9.1.1.1.14 Secondary-Side Leakage Test

A secondary side leakage test is performed to check closures for leakage after the opening of the secondary system. The SG secondary side is assumed to be pressurized to its design pressure. This transient is assumed to occur 120 times during the plant design life.

3.9.1.1.2 Level B Service Conditions (Upset Conditions)

The RCS under upset condition transients (PC-2 and PC-3 in accordance with ANS N51.1 [Reference 3.9-2]) are considered as follows:

- Loss of load
- Loss of offsite power
- RT from full power
  - Case A – with no inadvertent cooldown
  - Case B – with cooldown and no safety injection
  - Case C – with cooldown and safety injection
- Control rod drop
- Cold over-pressure
- Inadvertent safeguards actuation

- Partial loss of reactor coolant flow
- Inadvertent RCS depressurization
- Excessive feedwater flow
- Loss of offsite power with natural circulation cooldown
- Emergency feedwater cycling
- Partial loss of emergency feedwater
- Safe shutdown

3.9.1.1.2.1 Loss of Load

This transient occurs when there is a step decrease in the turbine load from full power (i.e., turbine trip) without an immediate RT. This transient results in the most severe pressure transient on the RCS in upset conditions. This transient is applied to confirm the integrity of component design. This transient is assumed to occur 60 times during the plant design life.

3.9.1.1.2.2 Loss of Offsite Power

This transient applies conservative assumption as follows

- Loss of feedwater flow occurs at the beginning of the event
- RT occurs upon receipt of low SG water level signal
- Simultaneously with RT, a loss of offsite power occurs

As a result, all RCPs, condensate pumps, and others connected to the turbine-generator bus are tripped.

As the RCPs are tripped, the RCS flow enters a natural circulation condition. The core residual heat is removed through the SGs, which receive feedwater from the emergency feedwater pump system. For this transient, reactor coolant temperature stabilizes at some equilibrium conditions. This transient is assumed to occur 60 times during the plant design life.

3.9.1.1.2.3 RT from Full Power

RTs from full power are considered to occur for many reasons. Upon a RT, the reactor coolant temperature and pressure promptly decrease from full power values because of the insertion of the control rods caused by RT. Then the conditions of the SG secondary side change due to continued heat transfer from the reactor coolant through the SG tubes. This transient continues until the reactor coolant and SG secondary side temperatures are stabilized at no-load conditions. A RT from full power is assumed to occur 100 times during the plant design life. The following three RT cooldown transients are considered.

- Case A – RT with no inadvertent cooldown

The RCS and the secondary system are controlled to become no-load conditions and are stabilized at no-load. This transient is assumed to occur 60 times during the plant design life.

- Case B – RT with cooldown and no safety injection

  This transient is considered after the RT with a malfunction (stuck open) of one main feedwater control valve. The main feedwater pumps keep supplying water to the SGs until reaching to the safety injection setpoint, and then the main feedwater is isolated by closure of main feedwater isolation valves. Consequently, the RCS temperature and pressure decrease. The emergency feedwater flow is terminated by the operator and the plant is then stabilized. This transient is assumed to occur 30 times during the plant design life.

- Case C – RT with cooldown and safety injection

  This transient is considered after the RT with a malfunction (stuck open) of one turbine bypass valve. The turbine bypass valve keeps cooling the RCS, and its pressure decreases to the safety injection setpoint. Upon the actuation of the SIS, the RCS temperature is decreased. The safety injection is terminated by the operator and the plant is then stabilized. This transient is assumed to occur 10 times during the plant design life.

3.9.1.1.2.4 Control Rod Drop

This transient occurs when one or more rod cluster assemblies inadvertently drop into the core due to the component failure or operator error. Because the reactor power is promptly decreased, the mismatch between the turbine load and reactor power causes the plant cooldown, and finally results in a RT on low pressurizer pressure.

This transient is assumed to occur 30 times during plant design life.

3.9.1.1.2.5 Cold Over-Pressure

RCS cold over-pressurization may occur at low temperature during plant heat-up or cooldown, and can occur with or without a steam bubble in the pressurizer. A cold over-pressurization is most severe when the RCS is in a water solid mode. The event is caused by inadvertent equipment malfunction or an operator error. Cold over-pressure events are initiated by either a mass input that exceeds the normal letdown capabilities, or by a heat input that attempts to expand the RCS water volume. To assure compliance with the requirements of 10 CFR 50, Appendix G (Reference 3.9-5), safety valve located in the residual heat removal (RHR) pump suction piping provides additional relieving capability of the RCS inventory. This transient is assumed to occur 30 times during the plant design life.

3.9.1.1.2.6 Inadvertent Safeguards Actuation

A spurious safety injection signal results in an immediate RT, and then, the high head safety injection pumps actuate. These pumps deliver water from the RWSP to the RCS. The controlled turbine bypass flow and feedwater flow removes the core decay heat. This transient continues until the operator terminates the safety injection pump and the

plant is stabilized. This transient is assumed to occur 30 times during the plant design life.

3.9.1.1.2.7 Partial Loss of Reactor Coolant Flow

This transient applies to a partial loss of reactor coolant flow from full power. Two RCPs are tripped due to the loss of power to the pumps. Such a transient results in a RT on the low reactor coolant flow, and then the turbine bypass system actuates automatically. Flow reversal then occurs in the affected loops. This transient is assumed to occur 30 times during the plant design life.

3.9.1.1.2.8 Inadvertent RCS Depressurization – Umbrella Case

Several transients are considered as sudden depressurization in the RCS during normal operation. They include:

- The inadvertent opening of the safety depressurization valve
- The malfunction of a single pressurizer pressure controller that causes two pressurizer spray valves to open
- The inadvertent opening of one pressurizer spray valve
- The inadvertent opening of the auxiliary spray valve

Umbrella Case – In the above events, the safety depressurization valve actuation results in the most severe RCS pressure and temperature transients. This case is used as an umbrella case to conservatively represent the reactor coolant pressure and temperature variations. This transient is assumed to occur 30 times during the plant design life.

Inadvertent Auxiliary Spray – The inadvertent auxiliary spray transient represents the depressurization transient with the most significant temperature variations on portions of the pressurizer, spray nozzle, and spray piping. If the auxiliary spray flow is inadvertently initiated, a rapid temperature change occurs at the pressurizer spray nozzle and on the pressurizer vessel. Therefore, in order to provide a conservative design condition for these components, an inadvertent auxiliary spray transient is selected. This transient is assumed to occur 15 times during the plant design life.

3.9.1.1.2.9 Excessive Feedwater Flow

This transient is assumed to result from the inadvertent opening of a feedwater control valve during hot standby or no-load condition with the feedwater pump, condensate, and heater drain systems in operation. It is considered that the stem of a feedwater control valve fails and that the valve opens fully. In the SG directly affected by the malfunctioning valve (failed loop), the feedwater flow step increases from a small flow at no-load to the value determined by the system resistance and the head of the operating feedwater pumps. The steam flow is assumed to remain at zero. Main feedwater is isolated by the closure of feedwater isolation valve upon receipt of a safety injection signal, and the plant is then stabilized. This transient is considered to be bounded by RT with cooldown and no safety injection transient. The frequency of RT with cooldown and no safety injection transient includes the frequency of excessive feedwater flow transient.

3.9.1.1.2.10 Loss of Offsite Power with Natural Circulation Cooldown

This transient is the same as a loss of offsite power, except that RCS temperature is reduced by natural circulation and heat removal via SG with the operation of the emergency feedwater pumps and the opening of main steam depressurization valve. When the RCS temperature and pressure are reduced to RHR operating condition, the RHR provides RCS cooldown. This transient is considered to be bounded by plant cooldown transient. The frequency of plant cooldown transient includes the frequency of loss of offsite power with natural circulation cooldown transient.

3.9.1.1.2.11 Emergency Feedwater Cycling

The emergency feedwater cycling is assumed to occur after RT events. After RT, relative small amounts of decay heat or RCP heat results in a low steam generation rate and slightly decreases the SG water level. To compensate for the decreasing level, the SGs are designed to be supplied continuously using the emergency feedwater flow control valves by operator action. However, the design transient of emergency feedwater cycling is assumed to supply the SG intermittently. This transient is assumed to occur 700 times during the plant design life.

3.9.1.1.2.12 Partial Loss of Emergency Feedwater

This transient is assumed to result from the single failure of emergency feedwater pump after RT events. The shell side of a single SG not supplied by emergency feedwater pump is assumed to be emptied. The SG tube and secondary shell integrity are evaluated for this condition. This transient is assumed to occur 30 times during the plant design life.

3.9.1.1.2.13 Safe Shutdown

This transient assumes RCS cooldown from no-load temperature and pressure to cold conditions using only safety-related systems. Boration of the RCS is initiated prior to cooling the RCS. The safety injection pumps are used to provide borated water to the RCS. The borated water is delivered to the RCS through the safety injection lines. To accommodate this addition to RCS inventory, continuous letdown is discharged from the emergency letdown line to the RWSP. RCS temperature is reduced by natural circulation and heat removal via SG with the operation of the emergency feedwater pumps and the opening of main steam depressurization valve. When the RCS temperature and pressure are reduced to RHR operation condition, RHR is operated for RCS cooldown. This transient is considered to be bounded by plant cooldown transient. The frequency of plant cooldown includes the frequency of safe-shutdown transient.

3.9.1.1.3 Level C Service Conditions (Emergency Conditions)

The RCS transients under emergency conditions (PC-4 in accordance with ANS N51.1 [Reference 3.9-2]) are considered as follows:

- Small LOCA
- Small steam line break
- Complete loss of flow

- Small feedwater line break
- SG tube rupture

3.9.1.1.3.1 Small LOCA

The small LOCA is considered as a break of small branch pipe of a reactor coolant pipe. This transient is assumed to occur five times during the plant design life.

3.9.1.1.3.2 Small Steam Line Break

A small steam line break is considered as a break equivalent to a main steam safety valve opening and remaining open. This transient is assumed to occur five times during the plant design life.

3.9.1.1.3.3 Complete Loss of Flow

This accident applies to a complete loss of flow from full power resulting from the simultaneous loss of power to all RCPs. The consequences are a RT on low RCP speed, and a turbine trip results from RT. This transient is assumed to occur five times during the plant design life.

3.9.1.1.3.4 Small Feedwater Line Break

This transient applies to a small break in the piping between the SG and the main feedwater isolation valve. The main feedwater flow, in the affected loop, results in the fluid spilling through the break. No main feedwater is supplied to either of SG and then all of SG water level decrease. Upon receipt of low SG water level signal, the reactor is tripped and the emergency feedwater pumps are actuated automatically. This transient is assumed to occur five times during the plant design life.

3.9.1.1.3.5 SG Tube Rupture

This transient applies to the double-ended rupture of a single SG tube resulting in decreases in pressurizer water level and reactor coolant pressure. The reactor is manually tripped. The RT initiates a turbine trip. And then, the emergency feedwater pumps are actuated automatically upon receipt of low SG water level signal. The RCS pressure decreases continuously after the trip because of continued primary to secondary leakage through the ruptured SG tube. The continued RCS leakage results in an actuation of the safety injection pump. This transient is assumed to occur five times during the plant design life.

3.9.1.1.4 Level D Service Condition (Faulted Conditions)

The RCS under faulted condition transients (PC-5 in accordance with ANS N51.1 [Reference 3.9-2]) are considered as follows:

- Reactor coolant pipe break (large LOCA)
- Large steam line break
- Large feedwater line break

- RCP locked rotor
- Control rod ejection

These accidents are assumed to each occur once during the plant design life.

3.9.1.1.4.1 Reactor Coolant Pipe Break (Large LOCA)

After a rupture of a reactor coolant pipe, the primary system pressure decreases rapidly. This rapid decrease of pressure causes the primary system temperature to decrease. Because of the rapid blowdown of coolant from the breaking point of the system and the comparatively large heat capacity of the metal portions of the components, the metal will remain at relative high temperature during blowdown. The SIS is actuated to inject water at a minimum temperature into the RCS.

3.9.1.1.4.2 Large Steam Line Break

This accident applies to a double-ended rupture of a main steam line. The analyses are based on the following conservative assumptions:

- The plant is initially at no-load condition
- The steam line break results in an immediate RT
- Main steam line isolation valves are initially open

3.9.1.1.4.3 Large Feedwater Line Break

This accident applies to the double-ended rupture of a main feedwater line resulting in a rapid blowdown of the affected SG and the termination of the feedwater flow to the others. The feedwater line break results in immediate reactor and turbine trips. The emergency feedwater pumps are automatically actuated on low SG water level.

3.9.1.1.4.4 RCP Locked Rotor

This accident applies to the seizure of the rotating assembly of a RCP rotor operating at full power. The RT occurs rapidly, as the result of low coolant flow in the affected cold leg. In order to conservatively determine the increase in pressure due to the reduction in flow, the seizure is assumed to occur instantaneously.

3.9.1.1.4.5 Control Rod Ejection

This accident applies to the single most reactive control rod being instantaneously ejected from the core. This reactivity insertion in a particular region of the core causes a severe pressure increase in the RCS.

3.9.1.1.5 Test Conditions Transients

The RCS under test condition transients are as follows:

- Primary-side hydrostatic test
- Secondary-side hydrostatic test

3.9.1.1.5.1 Primary-Side Hydrostatic Test

Both factory and plant site hydrostatic tests occur as a result of component or system testing. This hydrostatic test is performed at a water temperature compatible with reactor material ductility requirements and a test pressure of 3,107 psig (1.25 times design pressure). This transient is assumed to occur five times during the plant design life.

3.9.1.1.5.2 Secondary-Side Hydrostatic Test

The secondary side of the SG is pressurized to 1.25 times the design pressure, with a minimum water temperature of 120°F. This transient is assumed to occur five times during the plant design life.

3.9.1.2 Computer Programs Used in Analyses

3.9.1.2.1 List of Programs

A number of computer programs are used for static, dynamic, and hydraulic transient analysis. The computer programs used in piping analysis are listed in Section 3.12. The following is a list of programs used for the mechanical system component analysis.

- Abaqus — FE structural analysis program (Reference 3.9-6)
- ANSYS — FE structural analysis program (Reference 3.9-7)
- RELAP-5 — Transient hydraulic analysis program (Reference 3.9-8)
- MULTIFLEX — Thermal-hydraulic-structural system analysis program (Reference 3.9-9)
- NASTRAN — FE structural analysis program (Reference 3.9-10)
- SQUIRT — Analysis for leakage rate and area of crack opening for cracked pipe (Reference 3.9-11)

3.9.1.2.2 Program Validations

The verification and validation of computer programs is performed in compliance with the established quality assurance program (QAP). Error reporting and resolution of the errors are tracked following a QAP. The QAP is described in Chapter 17. The computer programs are validated using one of the methods described below. Verification tests demonstrate the capability of a computer program to produce valid results for the test problems encompassing the range of permitted usages defined by the program documentation.

- Hand calculations
- Known solution for similar or standard problem
- Acceptable experimental test results
- Published analytical results

- Results from other similar verified programs

3.9.1.3 Experimental Stress Analysis

Experimental stress analysis is not used for the US-APWR.

3.9.1.4 Considerations for the Evaluation for the Faulted Condition

Analytical methods used to evaluate faulted condition (Level D loading) for ASME Code, Section III (Reference 3.9-1), Class 1, 2, and 3 components are described in Subsection 3.9.3.

3.9.2 Dynamic Testing and Analysis of Systems, Components, and Equipment

3.9.2.1 Piping Vibration, Thermal Expansion, and Dynamic Effects

The testing of piping vibration, thermal expansion, and dynamic effects occurs during three phases which make up the initial test program (ITP) as discussed in Subsection 14.2.1.2: construction acceptance testing, pre-operational testing, and hot functional (startup) testing. The ITP is implemented to verify that the piping and piping restraints will remain within acceptable limits when subjected to piping vibrations and dynamic transients such as those caused by in-line component trips. The SSCs for which preoperational and startup testing is performed are identified in Subsection 14.2.1, which includes Class 1, 2, and 3 piping systems required by the ASME Code, Section III (Reference 3.9-1) to undergo a pre-operational test program. When applicable, instrumentation lines are included up to the first support in each of three orthogonal directions from the process pipe or equipment connection point.

The construction test phase involves checking the as-built piping systems, supports, and associated components for correct installation. The piping, pipe supports, and equipment supports are checked for proper assembly and design settings. The cold settings and cold gaps are recorded for the major system pipe supports, whip restraints, equipment, and equipment supports. The major piping systems checked are the reactor coolant, the RHR, the main steam, and the feedwater systems.

The purpose of pre-operational test program is to assure ASME Code, Section III (Reference 3.9-1), Class 1, 2, and 3, and other high-energy or seismic category I piping systems meet functional design requirements and that piping vibrations are within acceptable levels.

Thermal monitoring of the systems is also performed as required during pre-operational testing to assure that thermal predicted movements meet the required design considerations within appropriate support and whip restraint gaps. Excessive thermal deflections are noted and checked against as-analyzed piping results.

A check of snubber operability is made by recording hot and cold positions and comparing these positions to calculated hot and cold positions.

During the hot functional (startup) testing, systems are operated to check the performance characteristics of critical pumps, valves, controls, and auxiliary equipment. The requirements of startup testing are outlined in Subsection 14.2.1.2.

3.9.2.1.1 System Vibration and System Dynamic Effects Tests

Transient-induced vibrations and steady-state vibrations are possible within operational conditions. Transient-induced vibrations are a dynamic response to a transient, time-dependent forcing function such as fast valve closure. Steady-state vibrations are a constant presence, usually flow-induced.

The general requirements for vibration and dynamic effects testing of piping systems are specified in “Initial Test Programs for Water-Cooled Nuclear Power Plants”, RG 1.68 (Reference 3.9-12). More specific vibration testing requirements are defined in “Requirements for Preoperational and Initial Startup Vibration Testing of Nuclear Power Plant Piping Systems”, ASME OM (Reference 3.9-13). Detailed test specifications are written in accordance with this standard, and address such issues as prerequisites, test conditions, precautions, measurement techniques, monitoring requirements, test hold points, and acceptance criteria.

These tests are used to validate that the piping, components, restraints, and supports of specified high-energy and moderate-energy systems have been designed to withstand the dynamic effects of transient and steady-state flow-induced vibration and anticipated operational transient conditions.

Transient-Induced Vibrations

System operational transient events considered as causing transient-induced vibrations are AOOs. The specific systems and the associated transients considered in the preoperational test program are outlined in Section 14.2.

Time-dependent dynamic analyses are performed on the system by combining transient-induced stresses with other operating stresses in accordance with the criteria identified in Subsection 3.9.3 and Section 3.12.

Test procedures include details including the criteria for the evaluation of data output from the pipe movement monitors, such as displacement transducers or scratch plates, and strain gage or load cell locations.

Steady-State Vibration

Continuous vibration that generally develops as a result of flow disturbances in a system is considered steady state vibration. Since steady-state vibration are generally unpredictable, vibrations resulting during initial operation are measured for maximum amplitudes and stress intensity levels based on the guidance of ASME OM (Reference 3.9-13). The maximum alternating stress intensity S_{alt}, calculated from the measured amplitudes, is limited in accordance with the following formulas.

3.9.2.1.1.1 ASME Class 1 Piping Systems

In accordance with ASME Code, Section III (Reference 3.9-1), alternating stress levels are acceptable as follows:

$$S_{alt} = \frac{C_2 K_2}{Z} M \leq \frac{S_{el}}{\propto}$$

where

C_2 = secondary stress index as defined in the ASME Code, Section III

K_2 = local stress index as defined in the ASME Code, Section III

Z = section modulus of the pipe

M = maximum zero to peak dynamic moment loading due to vibration only, or in combination with other loads as required by the system design specification

S_{el} = 0.8 S_A, where S_A is the alternating stress at 10^6 cycles from Figure I-9.1; or S_A at 10^{11} cycles from Figure I-9.2.2 of the ASME Code, Section III. The influence of temperature on the modulus of elasticity is considered.

$\propto$ = allowable stress reduction factor: 1.3 for materials covered by Figure I-9.1; or 1.0 for materials covered by Figure I-9.2.1 or I-9.2.2 of the ASME Code, Section III, Appendices

3.9.2.1.1.2 ASME Class 2 and 3 or ANSI B31.1 Piping

For ASME Class 2 and 3 or ANSI B31.1 piping (Reference 3.9-14):

$$S_{alt} = \frac{C_2 K_2}{Z} M \leq \frac{S_{el}}{\propto}$$

where

C_2K_2 = $2i$

i = stress intensification factor, as defined in Subsection NC-3600 and ND-3600 of the ASME Code (Reference 3.9-1) or in ANSI B31.1 (Reference 3.9-14).

The results of the vibration-induced stresses will determine if support or system modifications are necessary. Based on the level of vibration, the design specification may be modified using the measured vibration as input to assure conformance to applicable codes. If modifications are performed, then the system is retested until acceptable results are achieved.

3.9.2.1.2 System Thermal Expansion Program

The system thermal expansion testing program verifies that the piping expands within acceptable limits during heatup and cooldown. In addition, a review of manufactured standard supports, such as spring hangers, snubbers and struts, is completed to verify thermal expansion is accommodated within acceptable limits during various operational

modes. System thermal expansion tests are developed in accordance with the guidance of ASME OM (Reference 3.9-13), Part 7.

3.9.2.2 Seismic Analysis and Qualification of Seismic Category I Mechanical Equipment

3.9.2.2.1 Seismic Qualification Testing

Seismic category I mechanical equipment and supports are designed to safely withstand the effects of postulated earthquakes combined with appropriate effects of normal and accident conditions without loss of intended safety-related function. Seismic qualification is performed by either analysis, testing or by a combination of both testing and analysis. The methods for seismic qualification of safety-related mechanical equipment by testing is performed in accordance with the recommendations of "IEEE Recommended Practice for Seismic Qualification of Class 1E Equipment for Nuclear Power Generating Stations", ANSI/IEEE Std 344-1987 (Reference 3.9-15), as endorsed by NRC, RG 1.100, Rev.2, "Seismic Qualification of Electric and Mechanical Equipment for Nuclear Power Plants" (Reference 3.9-16). The seismic qualification testing methods for safety-related mechanical equipment are described in Subsection 3.10.2.

3.9.2.2.2 Seismic System Analysis Methods

The seismic system and subsystem analysis methods (including response spectrum analysis, time history analysis, and equivalent static load analysis) are discussed in Subsections 3.7.2 and 3.7.3. The method of analysis for piping and supports is described in Section 3.12. Seismic analysis methods for mechanical equipment and supports use the guidelines in IEEE Std 344-1987 (Reference 3.9-15) and Subsections 3.10.2 and 3.10.3. The majority of mechanical equipment is supplied by vendors that are required to provide a seismic qualification report that meets the design specification provided in the purchase order.

The stiffness of the seismic subsystem anchorage must be determined and the assumptions made in the seismic analysis must be verified as accurately reflecting the mounting condition.

Two separate models are used for the RCL seismic analysis. One for RCL seismic analysis, which consists of the use of stick mass spring model of SG, RCP, Reactor Pressure Vessel, loop piping and buildings. The other is used for seismic analysis of internal components of the SG. RCL seismic analysis is described in Appendix 3C. The SG seismic analysis is performed considering internal components.

3.9.2.2.3 Determination of Number of Earthquake Cycles

The OBE is chosen as 1/3 of the SSE for the US-APWR (see Subsection 3.7.1.1). When the OBE is defined as less than or equal to 1/3 SSE, explicit design or analysis is not required for the OBE.

With the elimination of OBE, to account for fatigue in analysis and testing, the guidance for determination of the number of earthquake cycles described in "Policy, Technical, and Licensing Issues Pertaining to Evolutionary and Advanced Light-Water Reactor (ALWR) Designs", NRC Staff Requirements Memorandum (SRM) SECY-93-087 (Reference 3.9-17) is used. The number of earthquake cycles is discussed in Subsection

3.7.1.1 and Subsection 3.10.2. For piping analysis, the guidance in SECY-93-087 is used and the number of earthquake cycles to consider is defined in Section 3.12, Table 3.12-2, Note 3.

3.9.2.2.4 Basis for Selection of Frequencies

To avoid resonance, the fundamental frequencies of components and equipment should be preferably less than one half or more than twice the dominant frequencies of the forcing frequencies of the support structure. When the equipment frequencies are within this range, the equipment must be designed for the applicable loads.

3.9.2.2.5 Three Components of Earthquake Motion

The combination of three components of earthquake motion is dependent on the method used in the seismic analysis and is in accordance with “Combining Modal Responses and Spatial Components in Seismic Response Analysis”, RG 1.92, Rev.2 (Reference 3.9-18) as discussed in Subsection 3.7.3.4.

For piping analysis, the three sets of mutually orthogonal components of earthquake motion are combined by the SRSS method per RG 1.92, Rev.1 (Reference 3.9-19), as discussed in Subsection 3.12.3.2.

3.9.2.2.6 Combination of Modal Responses

Combination of modal responses is applicable when the response spectrum method of analysis is used, because the phase relationship between various modes is lost and only the maximum responses for each mode are determined. Modal responses are combined by the methods described in Subsection 3.7.3.5.

For piping analysis, the guidance on combining the individual modal results in RG 1.92, Rev. 1 (Reference 3.9-19) is used as discussed in Subsection 3.12.3.2.

3.9.2.2.7 Analytical Procedures for Piping

For seismic category I piping and seismic category II piping, the seismic analysis methods are provided in Subsection 3.12.3.

3.9.2.2.8 Multiple-Supported Equipment Components with Distinct Inputs

For equipment and components supported at several points by either a single structure at different elevations, or by two separate structures, the methods used to account for the different input motions are described in Subsection 3.7.3.1.

Generally, equipment supported at two or more locations with distinct seismic input uses upper bound of envelop of all the individual response spectra for these locations. For some equipment (e.g., RCS components), a coupled model with supported structures is used.

For piping systems that are supported by multiple support structures or at multiple levels within a structure, the method used is described in Subsection 3.12.3.3.

3.9.2.2.9 Use of Constant Vertical Static Factors

The constant vertical static factors method is not used to determine the vertical response loads in seismic analysis for the US-APWR. The vertical component used in seismic analysis is determined as described in Subsection 3.7.3.6.

3.9.2.2.10 Torsional Effects of Eccentric Masses

Most of the US-APWR equipment is designed such that torsional effects of eccentric mass do not occur. For some components (e.g., RCS components), the torsional effects are considered in the modeling and the analysis methods.

The methods used to account for the torsional effects of valves and other eccentric masses (for example, valve operators) in the seismic subsystem analyses are as follows:

- When valves and other eccentric masses are considered rigid, the mass of the operator and valve body or other eccentric mass are located at the center of gravity. The eccentric components (that is, yoke, valve body) are modeled as rigid members.
- When valves and other eccentric masses are not considered rigid, the dynamic models are simulated by lumped masses in discrete locations (that is, center of gravity of valve body and valve operator), coupled by elastic members with properties of the eccentric components.

Torsional effects of eccentric masses affecting the piping design are included in the analysis described in Subsection 3.12.4.2.

3.9.2.2.11 Buried Seismic Category I Piping, Conduits, and Tunnels

Buried seismic category I piping, conduits, and tunnels are not present in the US-APWR standard plant design. Site Specific design including structural design of the pipe tunnel and conduits is further discussed in Subsection 3.7.2.8 and Subsection 3.7.3.7.

3.9.2.2.12 Interaction of Other Piping with Seismic Category I Piping

Interaction of other piping with seismic category I piping is addressed in Subsection 3.12.3.7.

3.9.2.2.13 Analysis Procedure for Damping

The damping values used for seismic analysis are consistent with RG 1.61, Rev. 1 (Reference 3.9-20). The analysis procedure for damping is described in Subsection 3.7.3.3.

The damping values used in the seismic analysis of piping systems are addressed in Subsection 3.12.5.4.

3.9.2.2.14 Test and Analysis Results

The tests and analysis results demonstrating adequate seismic qualification will be documented and available for review. Implementation program that includes milestones and completion dates is further discussed in Section 3.10.

3.9.2.3 Dynamic Response Analysis of Reactor Internals under Operational Flow Transients and Steady-State Conditions

During normal operations, reactor internals experience vibrations caused by pressure fluctuations acting on their surfaces. The main source of these excitation forces is from coolant flow, such as flow turbulence and vortex shedding. The third source is RCP-generated acoustic pressure pulsation. In general, responses to RCP-generated pressure pulsation is small but will be addressed.

Following the Regulatory Guide 1.20 (Reference 3.9-21), a comprehensive vibration analysis program is set up for the US-APWR to assure that the vibration responses of the reactor internals during normal operations are acceptable before the pre-operational, hot function test. This analysis is a part of the overall comprehensive vibration assessment program. Detail of the analysis is described in Reference 3.9-22. The evaluation of the SG is described in Subsection 5.4.2.1.

3.9.2.3.1 Classification of Reactor Internals in Accordance with the Comprehensive Vibration Assessment Program

The US-APWR reactor internals components are evolved from that of the well-proven current 4-loop plant design operating in United States and Japan. The differences are as follows:

- Design: the US-APWR uses neutron reflector instead of baffles
- Size: there are increases in the diameters of RV, core barrel and the secondary core support assembly
- Arrangement: RCCA guide tubes and upper support columns in the upper plenum
- Operating conditions: there is an increase in flow rate

The US-APWR reactor internals represent a unique, first of a kind design because of its design, size, arrangements and operating conditions. Therefore, the first US-APWR will be classified as a Prototype in accordance with Regulatory Guide 1.20 (Reference 3.9-21). Upon qualification of the first US-APWR as a valid prototype, subsequent plants will be classified as Non-Prototype Category I.

3.9.2.3.2 Comparative Analysis of the US-APWR and the Current Plant

In this section, flow-induced vibration characteristics of the US-APWR reactor internals are assessed in comparison to those of the current 4-loop plant. Subsection 3.9.5 provides general information on the reactor internals.

- **General**

  The basic design of the US-APWR reactor internals follows that of the current 4-loop plant but features a larger core barrel diameter and a neutron reflector instead of a baffle structure. However, the coolant flow velocities are carefully designed to remain the same as those in the current 4-loop plant so that any increase in the excitation force due to a larger surface area exposed to the coolant flow will be compensated for by an increase in the bending stiffness of the core barrel.

  The diameter of the core barrel for the US-APWR is about 20% larger than that of the current 4-loop plant. This increase is necessary to accommodate an increase in the numbers of fuel assemblies from 193 to 257 and the additional space for the neutron reflector.

  A new component, the neutron reflector constructed of perforated metal ring blocks, surrounds the core cavity instead of the baffle structures in the current 4-loop plant.

  The core barrel stiffness is designed to maintain the vibration characteristics of the current 4-loop plant, taking into consideration the included mass of the neutron reflector and the fuel assemblies. The bending stiffness of the core barrel is approximately twice of that in the current 4-loop plant. The vibration responses of the core barrel in the US-APWR are estimated to be no larger than the corresponding values in the current 4-loop plant.

- **Lower Reactor Internals Assembly**

  The lower reactor internals assembly consists of the core barrel assembly, the neutron reflector assembly and the secondary core support assembly.

  Core Barrel Assembly

  The design of the core barrel assembly, with a lower core support plate, is based on the current 4-loop plant with a 14-ft core. In the US-APWR, the axial length of the core barrel is maintained. The core barrel diameter is increased by about 20% from that of the current 4-loop plant. As a result, the projected area of the core barrel is also 20% larger. Because the coolant flow velocities are equivalent to those in the current 4-loop plant, the increase in the flow excitation force on the core barrel is also 20%.

  The core barrel wall thickness is designed to maintain the beam mode natural frequency of the lower internal assembly to be no lower than that of the current 4-loop plant, even with a larger core and the neutron reflector. The resulting core barrel bending stiffness is about twice of that in the current 4-loop plant.

  The flow-induced beam mode vibration amplitude of the core barrel, estimated from the ratio of the excitation force to the bending stiffness (1.2 / 2), is about 60% that of the current 4-loop plant. Flow-induced shell mode vibrations are evaluated quantitatively with FE analysis technique. This is discussed in the following subsection.

Thus, the flow-induced vibration levels of US-APWR lower internals are acceptably low because the integrity of the current 4-loop plant has been confirmed and by many years of operational experiences.

Neutron Reflector Assembly

The neutron reflector, which is used in the US-APWR instead of the baffle structure in the current 4-loop plant, is constructed of perforated metal ring blocks. Analysis described in the next subsection shows that the flow-induced beam mode vibration of the neutron reflector is no larger than that of the core barrel beam mode and the resulting alternating stresses from both the beam and the shell modes are much lower than the limit for high cycle fatigue.

Secondary Core Support Assembly

The secondary core support assembly consists of secondary core support columns, diffuser plates, diffuser plate support columns, a base plate, and an energy absorber system. The diffuser plates are bolted to the diffuser plate support columns and those columns are fastened to the bottom of the lower core support plate. These constructions are similar to the tie plates and bottom mounted instrumentation columns used in the current 4-loop plant.

The main source of flow-induced vibration for the secondary core support assembly is the cross-flow to the diffuser plate support columns. The flow velocity profile in the lower plenum of the current 4-loop plants is maintained in the US-APWR because the geometry of the RV lower plenum is maintained. The fundamental modal frequency of the assemblies is slightly lower but the diameter of support column is much larger. As a result, the reduced velocity (U/f_nD, where U is the cross-flow velocity, f_n is the fundamental modal frequency and D is the diameter of the support column), which is a key dimensionless parameter for assessing flow-induced vibration, is 30% lower than that in the current 4-loop plant. Sufficient margins of safety for cross-flow induced vibrations, such as fluid elastic instability and turbulence-induced vibration, are maintained. In addition, since U/f_nD is less than 3.3 and the reduced damping parameter is higher than 1.2, lock-in vortex-induced vibration of the support columns is avoided per ASME Code, Section III, (Reference 3.9-1) Appendix N-1324.

- **Upper Reactor Internals Assembly**

The design of the US-APWR upper reactor internals assembly is based on the “Inverted top hat upper internals” configuration in the current 4-loop plant. The main flow-induced vibration mechanism is cross-flow induced vibration of tube structures, such as the RCCA guide tubes and the upper support columns. The diameter of the upper plenum is increased by about 20% from that in the current 4-loop plant but the height of upper plenum is maintained. The cross-flow area near the outlet is therefore increased by 20% from that of the current 4-loop plant. As a result, the rated cross-flow velocity in the upper plenum is about 10% higher than that in the current 4-loop plant because the flow rate is increased by about 30%.

The fundamental modal frequencies of the upper support column and the lower RCCA guide tube are the same as those in the current 4-loop plant because the basic dimensions of these structures are not changed. The top slotted column, located at the peripheral part of upper plenum, is another support column with larger diameter and higher fundamental mode frequency. The reduced velocity U/f_nD for the upper plenum structures is slightly higher than that of the current 4-loop plant, but sufficient margins of safety are maintained for cross-flow induced vibrations, such as fluid elastic instability and turbulence-induced vibration. In addition, since the vortex shedding frequencies are lower than 70% of the structural fundamental frequencies, lock-in vortex-induced vibration are avoided per ASME Code, Section III (Reference 3.9-1) Appendix N-1324. "Comprehensive Vibration Assessment Program for US-APWR Reactor Internals" (Reference 3.9-22) provides further details.

3.9.2.3.3 Quantitative FIV Analysis of the US-APWR

Turbulent fluctuating pressure has been identified as the main source of excitation of reactor internals during normal operation. The methodology proposed by Au Yang and Connelly, "A Computerized Method for Flow-Induced Random Vibration Analysis of Nuclear Reactor Internals" (Reference 3.9-23), is used to assess the responses of the core support barrel to the turbulence flow in the down-comer. The methodology for cross-flow induced vibration analysis of tube structures in the lower and upper plenums is based on the ASME Code, Section III (Reference 3.9-1), Appendix N, "N-1300 Flow-Induced Vibrations of Tubes and Tube Banks."

Acoustic pressure fluctuations generated by the RCP are assumed to be similar to those generated by RCP used in the current plant, because the key parameters governing RCP-induced pressure pulsations, such as the pump rotational speed and the number of impellers are the same. Forcing functions due to RCP are determined taking into consideration acoustic resonance modes in the reactor vessel.

FE analysis with computer code ANSYS (Reference 3.9-7) is used to calculate the flow-induced vibration amplitudes of the reactor vessel and internals. The methodology of structural modeling and forcing function assessment have been confirmed by a simulation analysis of the APWR 1/5 scale model flow test (Reference 3.9-24) in the same manner. The computed vibration response of the core barrel with the best estimate damping coefficient agrees with measured results.

For the prediction analysis of US-APWR reactor internals vibration responses, the damping coefficient smaller than the best estimate value is used to assure a conservative evaluation.

Refer to the "Comprehensive Vibration Assessment Program for US-APWR Reactor Internals" (Reference 3.9-22) for further details.

From the analysis results, the following conclusions are obtained.

- Alternating stress levels of reactor internals due to flow-induced vibrations are acceptably low in comparison with the limit for high cycle fatigue.
- The difference in reactor internals vibration characteristics, such as the natural frequency of the core barrel, is very small with or without the core. The vibration

responses without the core are also the same or slightly larger than those with the core. This is because the flow rate increases with the elimination of fuel assemblies and the subsequent pressure loss. Thus, in the preoperational test of the prototype plant, the results of vibration measurements after core loading are bounded by the measurements before core loading, and only measurements before core loading are necessary.

3.9.2.4 Preoperational Flow-Induced Vibration Testing of Reactor Internals

3.9.2.4.1 Background

The first operational US-APWR reactor internals are classified as Prototype in accordance with RG 1.20 (Reference 3.9-21). Upon qualification of the first US-APWR as a Valid Prototype, subsequent plants will be classified as Non-Prototype category I based on the designation of Regulatory Guide 1.20. The first COL Applicant is to commit to implement a pre-operational vibration assessment program and to prepare the final report consistent with guidance of RG 1.20 for a prototype. Subsequent COL Applicant need only provide information in accordance with the applicable portion of position C.3 of RG 1.20 for Non-Prototype internals.

Following the recommendation of Regulatory Guide 1.20 (Reference 3.9-21), a pre-operational vibration measurement program is developed for the first operational US-APWR reactor internals. Data will be acquired only during the hot functional test, before core loading. Analysis (Subsection 3.9.2.3) shows that the responses under normal operating condition with fuel assemblies in the core are almost the same or slightly smaller than those under hot functional test conditions without the core.

Subsequent to the completion of the vibration assessment program for the first US-APWR reactor internals, the vibration analysis program will be used to qualify subsequent US-APWR under the criteria for non-prototype category I.

The needs for flow-induced vibration, measurement testing, of steam generator internals is discussed in Subsection 5.4.2.1.2.10.

3.9.2.4.2 Measurement Program

Measurements will be performed during the pre-operational test to confirm the vibration characteristics and structural integrity of the Prototype US-APWR reactor internals.

The acquired data will be used to confirm that unexpected, abnormal vibrations do not occur, and that the vibration responses are sufficiently small compared to an acceptance criterion based on the design fatigue curves in the ASME Code, Section III.

Instrumentation consisting of strain gages, accelerometers, pressure transducers and displacement transducers will be installed on selected components. Accelerometers and displacement transducers will be used to measure the responses of the reactor internals. Strain gages will be used to directly measure the strains at key connecting points, and dynamic pressure transducers will be used to measure the pressure fluctuations at selected locations. Some of the specific measurement locations are described below.

- Core barrel: Strains in the core barrel flange will be measured with strain gages. Shell-mode responses will be measured with accelerometers mounted on the wall of the core barrel.
- Lower core support plate: An accelerometer mounted near the center of the lower core support plate will be used to measure the vertical response of this component.
- Neutron reflector: Shell mode responses and vertical motions will be measured by accelerometers. Relative displacement between the core barrel and the neutron reflector will be measured by displacement sensors. The vibration responses of the tie rod will be measured by strain gages.
- Secondary core support assembly: Vibration responses will be measured by strain gages mounted on the diffuser plate support columns.
- RCCA guide tubes and upper support columns: Beam mode responses due to the cross-flow in the upper plenum will be measured by strain gages and accelerometers.
- Upper core support: The vertical response will be measured by an accelerometer mounted near the center of the upper core support plate. Horizontal responses will be measured by strain gages installed on the upper core support skirt.

3.9.2.4.3 Inspection Program

The internal components of all US-APWR plants will be inspected before and after the hot functional test. The reactor internals will not be considered adequate and pass the comprehensive vibration assessment program unless no structural damage or change is observed.

3.9.2.4.4 Acceptance Criteria

The acceptance criteria of the pre-operational flow-induced vibration testing for reactor internals are as follows.

- Vibration measurement

  The measured rms vibration amplitudes will be multiplied by 4.5 to convert them into 0-peak values. The corresponding 0-peak stresses in key connecting components will be calculated from the measured vibration amplitudes or strains. These stresses must show sufficient safety margins based on the design fatigue curves in the ASME Code, Section III, Appendix-I.

- Inspection

  No structural damage or change is observed in the post-hot functional test inspection.

3.9.2.5 Dynamic System Analysis of the Reactor Internals under Faulted Conditions

NUREG-0800, SRP 3.9.2, Rev. 3 (Reference 3.9-25), requires that the Design Control Document (DCD) provide a detailed discussion of the reactor internals, design criteria and dynamic analyses methodology for the combined seismic and postulated pipe rupture events under ASME Level D (faulted) service conditions. The results of the

analyses are required to meet the stress limits of the ASME Code, Section III, Subsection NG (Reference 3.9-1) for core support structures, and the functional requirements of the reactor internals design specification. Meeting the requirements of the ASME Code, Section III (Reference 3.9-1) and the design specification provides assurance of the structural and functional integrity of the reactor internals under ASME Level D service conditions, combined loads of seismic and pipe rupture events.

3.9.2.5.1 Seismic Analysis Methodology and Acceptance Criteria

The seismic analysis methodology is based on two separate mathematical models and uses general purpose FE computer code. The first model is a three-dimensional non-linear dynamic FE computer model representing the reactor internals and the support system and is used to determine the maximum accelerations, displacements, and loadings that are used as inputs to the second model. The second computer model or models are three-dimensional static FE computer programs that are used to determine the maximum seismic stress intensities and displacements.

The maximum stresses from the static FE model for both SSE and LOCA events are combined by the SRSS method and the results are compared to the service limit stress intensities in the ASME Code, Section III, Subsection NG (Reference 3.9-1). The maximum displacements and loads are compared to the allowable limits in the design specification. The details of the seismic dynamic computer model are discussed below.

The pre-processing input of the seismic mathematical computer model comes from the design drawings and is the bases of the geometrical and material representation and connectivity of the reactor internals components and interfacing components. The model includes representation of the RV support system, inlet and outlet piping nozzles, control rod drive mechanism (CRDM) system, integrated head support system, in-core instrumentation support system, and fuel assembly nozzles and grids.

Figures 3.9-1 and 3.9-2 show a typical mathematical model of the reactor internals used for seismic analysis. The physical geometry and material properties (density, modulus of elasticity, Poisson's ratio) of the reactor internals are represented by beam elements. The reactor internals and interfacing structures are connected or represented by mass inertia effects, stiffness matrices, and hydro-dynamic matrices, springs, and/or impact elements including gap and damping (including coexistence of viscous and Coulomb damping).

The nodal point degrees of freedom, and damping coefficients of the reactor internals and surrounding structures are selected such that the most dominant frequencies are represented in the seismic response. Dominant frequencies are identified by comparing the frequency response of the reactor internals with the expected responses based on experience and measurements.

Fluid-structure interaction effects are accounted for by matrices developed for that purpose.

The reactor internals seismic input can either be from in-structure response spectra or in-structure time-history accelerations, which is obtained from the analysis results described in Subsection 3.7.2 and Appendix 3H. This model employs the design response spectra of the RCL model based on modified input from RG 1.60, Rev. 1

(Reference 3.9-26) as described in Subsection 3.7.2.2. This model is used in determining the effect of vibratory motion for SSE and 1/3 SSE seismic conditions.

Additional loading input to the seismic analysis are vertical pressure loadings converted to nodal point external loads, and the vertical weights of the reactor internals and interfacing components, as inputs of density on the beams with spring effects or mass nodal points.

The reactor internals static computer models are used to determine the reactor internals component stresses and displacements. The structural design adequacy of the reactor internals are verified to be capable of withstanding the dynamic loadings of the most severe SSE in combination with the LOCA events.

3.9.2.5.2 Pipe Rupture Analysis Methodology and Acceptance Criteria

The pipe rupture design basis methodology is similar to the seismic methodology, wherein, a dynamic computer model is used to determine the maximum accelerations, displacements, and loadings, and the reactor internals static computer models are used to determine the reactor internals component stresses and displacements. However, instead of a response spectra or time-history for the seismic inputs, a time-history computer code is used to determine the pipe rupture loads-time history on the dynamic computer model nodes and elements. The details of the pipe rupture dynamic model and pressure input loads are discussed below.

The LOCA dynamic computer model is a three-dimensional FE model that defines the geometry, material properties, and nodal point connections and elements.

The mathematical model for LOCA dynamic effects includes reactor internals and dynamically-related piping stiffness, RV supports, interfacing components, and fluid-structure interaction effects.

The mathematical models in Figures 3.9-1 and Figure 3.9-2 are used for the LOCA dynamic system analysis, which include such structural characteristics as flexibility, mass inertia effects, geometric configuration, spring, and impact elements including gap and damping (including coexistence of viscous and Coulomb damping). The effects of flow upon the mass and flexibility properties of the system are accounted for in the model.

The design input for the pipe rupture event is defined by the postulated LBB pipe rupture as discussed in Subsection 3.6.2. A time-history forcing function on the reactor internals comes from pipe rupture that are enveloped by the most limiting blow-down hydraulic loads.

The MULTIFLEX computer code is used for the blowdown analysis in the hydraulic load evaluation of the postulated LOCA accident. MULTIFLEX is a computer program which calculates the transient of pressure, flow rate and density during the initial phase of the blowdown in a complex system, such as the primary coolant system of a pressurized water reactor (PWR). The MULTIFLEX code includes mechanical structure models and their interactions with thermal-hydraulic systems (Reference 3.9-9).

The general characteristics of the MULTIFLEX code are shown as follows:

- A complex system is modeled with one-dimensional hydraulic piping.
- The flow conditions within the system are calculated by solving the one-dimensional equations of mass, momentum and energy conservation using the method of characteristics.
- The MULTIFLEX code includes heat transfer models of the core and the SG, and also simulates various boundary conditions of the PWR system, including the core.
- The calculated results of the MULTIFLEX code (pressure, flow rate, and other parameters) are used in the RV internals load evaluation and the RCL mechanical load evaluation.

The methods and procedures for the LOCA dynamic system analysis is based on the computer code used in the LOCA analysis. The computer code incorporates the governing equations of motion and the computational scheme for deriving results. Asymmetric LOCA loads for the reactor internals are considered for the LOCA dynamic system analysis.

The outputs of the LOCA response analysis are time-history accelerations, displacements (absolute and relative), and loadings (forces and moments). The maximum loadings and displacements are input into reactor internals component static FE models and the maximum stress intensities and displacements are compared to the ASME Code, Section III (Reference 3.9-1) and the allowable interface load and displacement limits (see Table 3.9-2). The criteria for acceptance of the LOCA loads and displacements are discussed in Section 3.9.2.5.

The LOCA dynamic system analyses results confirm that the adequacy of the structural design of the reactor internals can withstand the dynamic loadings of the most severe LOCA in combination with the SSE.

3.9.2.5.3 Structural Design Adequacy Criteria for Level D Combined Loadings

The most severe dynamic loadings and displacements of the pipe rupture event are combined with the SSE event and the resulting stresses are compared with the limits of the ASME Level D service limits for acceptability.

In addition to the ASME Code, Section III (Reference 3.9-1) stress criteria, there are functional requirements listed in Table 3.9-2 are to be met as follows:

(a) The allowable horizontal load of the guide tube should not impede insertion of the control rod assemblies after the LOCA event.

(b) The upper core barrel displacement is not to impede the down comer emergency core cooling flow after the LOCA event.

(c) The reaction loads at the RV connections are not to exceed allowable values of the interface load.

(d) The maximum vertical displacement of the upper core plate relative to the upper support plate should preclude buckling of the guide tube.

(e) The upper core barrel permanent displacement should not prevent loss of function of the control rod assembly by radial inwardly deforming the upper guide tube.

The structural design and sizing of the US-APWR reactor internals are based upon current 4-loop plants. However, the pipe break sizes of current 4-loop plants were based on the largest LOCA loads that resulted from either a 1.0 ft^2 single-ended cold leg break or a double-ended hot leg break, whereas, LBB is applied to determine the break condition for the US-APWR design input. The magnitude of blowdown hydraulic loads applying LBB is smaller than either of the loads for the large cold leg or hot leg breaks. Consequently, stresses and deflections of reactor internals under faulted conditions meet the ASME Code, Section III (Reference 3.9-1) stress and deflection limits including SSE combined by SRSS.

3.9.2.6 Correlations of Reactor Internals Vibration Tests with the Analytical Results

To confirm the computational methodology for flow-Induced vibration response, including structure modeling and forcing function assessment, a simulation analysis of the APWR 1/5th scale model flow test was conducted. The computed vibration response of the core barrel with the best estimate damping coefficient, is equivalent with the measured results.

For the prediction analysis of US-APWR reactor internals vibration responses, a damping coefficient smaller than the best estimate value is used to assure a conservative evaluation.

The results from the prediction analysis of US-APWR will eventually be compared with the measured data from the pre-operational vibration test, described in Subsection 3.9.2.4, in accordance with the guidelines given in Regulatory Guide 1.20 (Reference 3.9-21). Any discrepancies between the predicted and measured values will be accounted for and fully explained. If necessary, the input parameters, such as the turbulent forcing function and the damping coefficient, in the vibration analysis will be adjusted in accordance with the measured data and the analysis repeated to resolve the differences between the analytical and measured results.

3.9.3 ASME Code Class 1, 2, and 3 Components, Component Supports, and Core Support Structures

This Subsection discusses the required regulatory compliance in accordance with NUREG-0800, SRP 3.9.3, Rev. 2 (Reference 3.9-27) for maintaining structural and leak tight integrity requirements of safety-related, pressure-retaining components, core support structures, and component supports, which are designed to the criteria of the ASME Code, Section III, Division 1 (Reference 3.9-1). Section 3.12 provides the ASME Class 1, 2, and 3 piping and pipe support design requirements related to seismic category I, II, and non-seismic piping systems. ASME Code, Section III (Reference 3.9-1) Classes 1, 2, 3, seismic category I, II, non-seismic, and related ANS classification applications are defined in Section 3.2. The regulatory requirements associated with this subsection include 10 CFR 50, Appendix A (Reference 3.9-28), GDC 1, 2, 4, 14, 15, 10 CFR 50.55a (Reference 3.9-29), 10 CFR 52 (Reference 3.9-30), 10 CFR 52.47(b)(1) (Reference 3.9-31), and 10 CFR 52.80(a) (Reference 3.9-32).

The US-APWR design meets the SRP 3.9.3 (Reference 3.9-27) criteria for ASME (Reference 3.9-1) Class 1, 2, and 3 components and component supports, and CSSs as described in this subsection in the following respects:

- 10 CFR 50.55a (Reference 3.9-29) and 10 CFR 50, Appendix A (Reference 3.9-28), GDC 1 as they relate to structures and components being designed, fabricated, erected, and tested to quality standards commensurate with the safety-related functions to be performed. These requirements are met for the design of safety-related components and structures by meeting the required ASME service level loading conditions, stress margins, stress limits, quality requirements, and test conditions for the operational and accident conditions defined as Design Basis Events during the life of the plant.
- GDC 2 and 10 CFR 50, Appendix S (Reference 3.9-33), as it relates to structures and components important to safety being designed to withstand the effects of earthquakes without the loss of capability to perform their safety functions. These requirements are met by designing the components and structures to the ASME code using the appropriate combinations of normal and accident conditions and the associated effects of natural phenomena, such as earthquakes.
- GDC 4 as it relates to safety-related structures and components being designed to accommodate the effects of, and to be compatible with, the environmental conditions associated with normal operation, maintenance, testing, and postulated accidents, including LOCAs. The design of safety-related components and structures is in accordance with the ASME Code, Section III (Reference 3.9-1) and the components and structures are shown capable of performing their intended safety function(s) during all normal and accident environmental conditions as specified by GDC 4.
- GDC 14 as it relates to the RCPB being constructed[2] so as to have an extremely low probability of abnormal leakage, of rapid propagating failure, and of gross rupture. The construction of RCPB components to the ASME Code, Section III (Reference 3.9-1) assures compliance with GDC 14.
- GDC 15 as it relates to the RCS and associated auxiliary, control and protection systems being designed with sufficient margin to assure that the design conditions of the RCPB are not exceeded during any condition of normal operation, including AOO. The construction of the RCPB and associated auxiliary system components and structures to the ASME Code, Section III (Reference 3.9-1) requirements assures a sufficient safety margin for normal and accident conditions.
- 10 CFR 52 (Reference 3.9-30) requirements assure that the components and component supports, and core support structures will be constructed in accordance with the certified design. Through requirements of “as-built” reconciliation of the physical plant with the specified requirements of the ASME

[2] Construction (as used in ASME Code, Section III, Division 1): an all-inclusive term comprising documentation, materials selection and qualification, design, fabrication, examination, testing, inspection, and certification required in the manufacture and installation of an item.

Code, Section III (Reference 3.9-1), the certified design requirements are assured.

- 10 CFR 52.47(b)(1) (Reference 3.9-31), requires that a design certification application contain the proposed inspections, tests, analyses, and acceptance criteria (ITAAC). The ITAAC are necessary and sufficient to provide reasonable assurance that, if the inspections, tests, and analyses are performed and the acceptance criteria met, a plant that incorporates the design certification is built and will operate in accordance with the design certification, the provisions of the Atomic Energy Act, and the NRC's regulations; through requirements of "as-built" reconciliation of the physical plant with the specified requirements of the ASME Code, Section III (Reference 3.9-1), including ITAACs, the certified design is assured.
- Proposed inspections, tests, and analyses which satisfy 10 CFR 52.80(a) (Reference 3.9-32) are discussed in Subsection 14.3, including those applicable to emergency planning as discussed in Subsection 13.3 that the licensee is to perform, and the acceptance criteria that are necessary and sufficient to provide reasonable assurance that, if the inspections, tests, and analyses are performed and the acceptance criteria are met, the facility is constructed and will operate in conformity with the provisions of the Atomic Energy Act and the NRC's regulations. The proposed ITAAC will assure that the facility is constructed, operates, and will continue to operate to the certified design conditions.

This subsection further describes the application of the ASME Code, Section III (Reference 3.9-1) to safety-related components and core support structures. The design and installation criteria applicable to over-pressure protection devices are presented along with the requirements for operability assurance related to maintaining structural and leak tight integrity, pressure retaining capability, and required functionality of pumps and valves.

In order to assure that ASME components meet the service level stress requirements and functionality requirements, the ASME Code, Section III, NCA-2000 (Reference 3.9-1) requires that a design specification be prepared for ASME Code, Section III, Class 1, 2, and 3 components. The design specifications for ASME Code, Section III, Class 1, 2 and 3 components, supports, and appurtenances are prepared under administrative procedures that meet or exceed the ASME Code, Section III rules. These specifications conform to and are certified to the requirements of ASME Code, Section III depending on the component classification. The Code also requires a design report for safety-related components, to demonstrate that the component design meets the requirements of the relevant ASME design specification and the applicable ASME Code, Section III (Reference 3.9-1).

The seismic and accident load conditions for primary components and piping design are summarized in Reference 3.9-58 and the stress analysis results for components and piping are summarized in Reference 3.9-59.

3.9.3.1 Loading Combinations, System Operating Transients, and Stress Limits

This subsection establishes the criteria for the selection and definition of design limits and loading combinations associated with normal operation, postulated accidents, and

specified seismic and other transient events for the design of other safety-related ASME Code, Section III (Reference 3.9-1) components. These load combinations may include the effects of dead load, internal and external pressure, component and insulation weights, and fluid effects due to various system operational characteristics including testing, predicted thermal expansion, seismic induced dynamic loads and displacements, support reaction loads, and other loads as specified by the requirements of the ASME Code, Section III (Reference 3.9-1), Subsection NB, NC, ND, NF or NG Code depending upon component and Service Level classification.

The basis of the ASME component design acceptance for applicable loading combinations involves comparison of calculated stress and fatigue demand levels to acceptable stress and fatigue capacity allowables specified by ASME Code, Section III (Reference 3.9-1). The ASME Code acceptance standards differ depending on whether a component is classified as ASME Code, Section III, Class 1, 2, or 3. In addition to the ASME classification, plant operational modes and frequency of system operating and/or transient events are used to define which ASME service limit (Level A [Normal], Level B [Upset], Level C [Emergency], Level D [Faulted], and Test) applies. These service limits are defined in Subsection 3.9.1. The system operating and/or transient events are developed from guidance provided in ANS N51.1-1983 (Reference. 3.9-2). The design transients for the US-APWR Class 1 RCS are defined in Subsection 3.9.1. These transients are determined based on a 60-year plant operational life and are classified into the ASME Level A, Level B, Level C, and Level D service limits, and test conditions, depending on the expected frequency of occurrence and severity of the event. The design transients for ASME Level A and B service conditions are required by the ASME Code, Section III, Subsection NB-3200 (Reference 3.9-1), in the evaluation of cyclic fatigue for the Class 1 components and piping. The effects of seismic events are also included in the evaluation of cyclic fatigue by defining a 1/3 SSE seismic event as Level B service condition which will require fatigue evaluation of both thermal and seismic effects. The number of cycles considered are based on equivalent of usage factor where 300 cycles at 1/3 SSE stress range equals the same usage factor as 20 cycles a SSE stress range (see Reference 3.9-33).

3.9.3.1.1 Seismic Load Combinations

As indicated in Subsection 3.9.1, mechanical components, classifications are in accordance with ASME Code, Section III, Subsection NCA-2000 (Reference 3.9-1) for Division 1 systems, components, and supports. The required load combinations including seismic events for ASME Code, Section III (Reference 3.9-1), Classes 1, 2, and 3 components and structures is presented in Tables 3.9-3 and 3.9-4, and for piping and pipe supports, in tables within Section 3.12. Table 3.9-5 provides the definition of terms associated with Tables 3.9-3 and 3.9-4.

Two occurrences of an SSE are assumed in the qualification of seismic category I systems and components, including core support structures, using the Level D service condition for pressure boundary integrity. Additionally, fatigue sensitive components are qualified for cyclic motion due to earthquakes smaller than the SSE. Included in the analyses, are the seismic effects of seismic events with amplitude not less than 1/3 SSE

amplitude[3]. The number of earthquake motion cycles used is based on IEEE Std 344-2004, Appendix D (Reference 3.9-34) guidance. This guidance requires the equivalent fatigue damage of two full SSE events with 10 high-stress cycles per event, therefore, 20 high-stress cycles. One SSE cycle is equivalent to 15 cycles at 1/3 SSE amplitude in accordance with Reference 3.9-34; therefore, 20 full SSE cycles are equivalent to 300 cycles at 1/3 SSE amplitude.

Tables 3.9-3 and 3.9-4 provide required loads and load combinations associated with ASME Code, Section III (Reference 3.9-1), Class 1, 2, 3 and Class CS systems, components and supports.

Due to the low probability of occurrence of a SSE during operational modes occurring less than 10% of the plant's operation time, the SSE is analyzed in combination only with those operating modes that occur greater than 10 percent of the time.

The SSE is, therefore, considered combined under the following PCs:

- Normal plant full (100%) power conditions and normal plant operating temperatures are considered for material properties and are used in combination with SSE.
- It is assumed that a simultaneous Loss of Offsite Power and a single failure of a safety-related system occur as a result of an SSE event. In addition, it is assumed that non safety-related systems are unavailable.
- For concurrent events, the timing sequence and initiating conditions that occur between the SSE and occasional transients such as valve discharge are considered combined when the SSE is the initiator of the transient condition. The SSE duration is considered as 22 seconds. Non-seismic structures and components are assumed to be functionally and structurally unavailable at the beginning of the SSE. A single failure assumption is considered for a single active component.
- An evaluation of non safety-related systems is performed to assure that their failure in an earthquake does not impact or jeopardize plant safe shutdown or required post accident monitoring.
- The fire protection lines that could affect safe-shutdown equipment or required post accident equipment through rupture and/or flooding during or following a seismic event are required to be seismically qualified.

---

[3] OBE as used in Table 1 of SRP 3.9.3, Appendix A and in ASME Code, Section III for stress evaluation subject to fatigue is 1/3 SSE with SSE damping. The earthquake inertial and anchor movement loads used in the Level B stress intensity range and alternating stress calculation is taken as 1/3 of the peak SSE inertial and anchor movement loads. In this case, the number of cycles to be (continued on next page) (continued from previous page) considered for earthquake loading is 300 as derived in accordance with Appendix D of IEEE Standard 344-2004 (Reference 3.9-34). In certain cases for non-standard SSCs, the 1/3 SSE may be adjusted higher for site-specific design as permitted by SECY 93-087 (Reference 3.9-17).

In addition to specified events based on the system operational occurrences during normal and accident events, the US-APWR is designed for special combinations of events based on past precedents and regulatory guidelines, in addition to those events and event combinations based on the probability of occurrence. These additional load combinations are not considered as event sequences. In order to assure an adequate safe-shutdown margin, the SSE loads are combined concurrently with these loads. Examples of these past precedent and regulatory guideline loading conditions are as follows:

- SSE is combined with postulated pipe rupture loads for ASME components, component supports, and support structures. Subsections 3.6.1 and 3.6.2 discuss postulated pipe rupture and the requirements for mitigating pipe rupture effects.
- As described in Section 3.8, the SSE is combined with containment design pressures for the qualification of the containment pressure boundary.
- The polar crane and associated rigging equipment are qualified to withstand an SSE event without failure while performing a heavy load lift.

3.9.3.1.2 Loads for ASME Code, Section III, Class 1 Components, Core Support, and Component Supports

The loads and combination of loadings for Class 1 component, core supports, and component support including system operating transients are considered for each component support within a system, including the designation of the appropriate service stress limit for each loading combination. These loads are listed and briefly defined in Table 3.9-5. Additional descriptive information on the loads, stress limits, and analysis methods for piping is presented in Section 3.12. The loadings are described in the paragraphs that follow.

Pressure loading is categorized as either design pressure or operating pressure.

- The design pressure is used in calculating required minimum wall thickness per the ASME Code, Section III (Reference 3.9-1).
- The operating pressure is associated with qualification of the ASME Code, Section III (Reference 3.9-1), Level A, B, C, and D service conditions.

Dead load considers weights of piping, components, insulation, attached appurtenances, and internal fluid weights. Dead load weight is equivalent to 1.0 g acceleration in the vertical downward direction.

- In the static evaluation of the piping system, the piping model is divided into discrete distributed mass points and these loads are based on piping material weight, insulation weight and fluid properties during normal operating conditions.

The SSE loading analysis is performed for pressure boundary integrity of piping and components for Class 1 systems.

- Seismic loads are identified as either seismic inertia loads or seismic anchor motion loads. The seismic inertia loads represent the dynamic primary portion of

the response, and the seismic anchor motion loads represent the static secondary portion.

- Subsection 3.7.3 and Section 3.12 provide the seismic analysis methods used in qualification of piping systems.

Transient loading resulting from a postulated pipe break is analyzed.

- Dynamic flow and pressure loads are analyzed.
- Postulated pipe breaks and the interaction effects on safety-related components and structures are considered based on the requirements of GDC 4 and NUREG-0800, SRP 3.6.1 (Reference 3.9-35) and SRP 3.6.2 (Reference 3.9-36). The pipe rupture event considered for loading is the largest pipe that does not satisfy LBB criteria.
- Asymmetric blowdown load is discussed in Section 3.9.2.5.
- DCD Subsections 3.6.1 and 3.6.2 define postulated pipe break locations and requirements for the evaluation of postulated pipe breaks.

LBB criteria described in Subsection 3.6.3 are used in accordance with GDC 4 and NUREG 1061, Volume 3 (Reference 3.9-37), to determine the following:

- The RCL, the specific RCS ASME Code, Section III, Class 1 branch lines and main steam lines listed in Appendix 3B that can be exempted from required pipe rupture considerations by meeting LBB criteria.
- Piping in these systems that do not meet LBB screening criteria and; therefore, require pipe rupture analysis.

Additional transient loadings are considered as follows:

- Sudden opening and closing of active valves, relief valves and safety valves.
- Components and piping evaluated for the dynamic response to transient loads. The relief valve open system (sustained) is evaluated as a static load subject to a dynamic load factor (DLF).

Additional loading events and the effects on safety-related equipment are examined. The loads are evaluated for local and global stress effects on a case-by-case basis and are not combined with any other Level C or D service condition. These additional loads include the following conditions:

- A RCP locked rotor event in the RCL is evaluated for pressure effects and dynamic fluid transient effects on the RCP, SG channel head, and reactor coolant piping. During this event, the RCP is assumed to come to a rapid (but not instantaneous) stop and to transfer the angular momentum through the motor enclosure and pump casing to the SG nozzle and reactor coolant piping. The stresses calculated for this event are evaluated using Level D service limits for the immediately affected components and supports in the affected RCL and using Level B service limits for components in the other RCL. The Level B service stress limits for components outside the affected loop are used for both

stress and functionality. This event and analyses are further described in Subsection 5.4.1, relative to the RCP.

- An evaluation of heavy lift loads for various components is performed to assure that adequate design measures have been considered in the qualification of these components. There are several components that fall into this category. An example is the RV head lifting rig, which is part of the load path for the lifting function of the RV head. The initial lifting of all major RCS equipment including RCP, SG, RV, and Pressurizer are designed and evaluated for heavy load lifting.

ASME Code, Section III (Reference 3.9-1), Subsection NB-3200 requires consideration of design transient conditions for Class 1 components. Subsection 3.9.1.1 describes these design transients. The design of Class 1 components involves evaluating global and local stresses in components and evaluating the fatigue of these components to assure the integrity of the RCS.

The transient conditions selected for fatigue evaluation are based on conservative estimates of the magnitude and anticipated frequency of occurrence of the temperature and pressure transients resulting from various plant operating conditions. The selection of transient conditions is performed using the following criteria:

- Level A and B service condition design transients are evaluated in the analysis of cyclic fatigue.

- Up to 25 stress cycles for Level C service conditions may be excluded from cyclic fatigue analysis in conformance with ASME Code, Section III (Reference 3.9-1) criteria.

- Any Level C service conditions which are in excess of the 25 cycle limits are evaluated for the effect on cyclic fatigue using Level B criteria.

For the evaluation of cyclic fatigue, the cycles included for seismic events are evaluated using Level B criteria and cyclic loading associated with 1/3 SSE events, and are not excluded from the fatigue evaluation regardless of the size of the stress range considered.

The effects of seismic events on the design of components other than piping are considered in one of the following ways. The effects of seismic events are considered by including 20 full cycles of the maximum SSE stress range in the fatigue analysis. Alternately, a 1/3 SSE cyclic event is used as discussed in Subsection 3.9.3.1.

Thermal Stratification, Cycling, and Striping

Thermal stratification, cycling, and striping are phenomena that have resulted in pipe cracking at nuclear power plants. As a result of these incidents, the NRC has issued several bulletins, which are discussed in Subsection 3.12.5.10.

3.9.3.1.3 ASME Code, Section III, Class 1 Components and Supports and Class CS Core Support Loading Combinations and Stress Limits

ASME Code, Section III, Class 1 load, load combinations, load definitions, and required stress criteria for component, component supports, and core support structures are provided in Tables 3.9-3, 3.9-4, 3.9-5, and 3.9-6.

Appendix F of ASME Code, Section III "Rules for Evaluation of Service Loadings with Level D service Limits" (Reference 3.9-1), provides the stress limits for Level D service that allow inelastic deformation. Pressure boundary integrity and core support structural integrity are confirmed by meeting the limits of Appendix F, however, meeting Appendix F limits does not assure operability. The required analysis of cyclic fatigue of piping is presented in Section 3.12 and associated design transient requirements for Class 1 components and component supports are discussed in Subsection 3.9.1.

The ASME Code, Section III (Reference 3.9-1), Class 1 stress analyses for components and core structures consider sustained loads (including dead load, pressure, and thermal expansion), system operational transient loads (thermal and fluid pressure transients), seismic loads, and pipe rupture loads (design pipe breaks, unless modified by LBB evaluations, and LOCA). Additionally, ASME Code, Section III, Class 1 pressure boundary components are subject to fatigue usage evaluations over the 60-year plant life.

The assessment of the environmental impact on fatigue of ASME Code, Section III, Class 1 components follows the requirements delineated in RG 1.207 (Reference 3.9-38).

The SSE is combined with the pipe rupture loads using SRSS methodology. This loading combination is evaluated for ASME Code, Section III (Reference 3.9-1) components and piping that are required to mitigate the effects of the postulated pipe rupture and the supports for those components and piping. Further explanation of pipe rupture effects is provided in Subsections 3.6.1, 3.6.2, and 3.6.3 and Section 3.12.

3.9.3.1.4 RCL Piping Model

Appendix 3C provides a detailed description of the RCL piping, components, and support system model. The model consists of the primary hot, cold, and cross-over loop piping, the connecting equipment components that include the RV, the SG, and the RCP for each loop and the respective RCL component supports.

The US-APWR has four loops and, therefore, four loop models that include the hot, cold and crossover legs and nozzles. These combined system models include both the translational and rotational stiffness and mass characteristics of the RCL piping and components, and the stiffness of the associated supports. The resulting static and dynamic loads generated from the RCL and the component support models provide the end loads and deflections to the connecting components for each loop analyzed.

Each major connecting equipment component, including SG, RV, and RCP, is modeled independently, including its support structures. The details of the models are developed from criteria established in Section 3.10 for mechanical components, in addition to the required load combinations for Class 1 piping and supports as presented in Section

3.12. The RCL analysis for the SSE presented in Appendix 3C uses the time-history direct integration, time history modal analysis, or response spectra modal analysis methods for seismic dynamic analysis.

A coupled model including mass and stiffness of the RCL, R/B, PCCV, and Containment Internal Structure is seismically evaluated using a time-history analysis with dynamic input defined from the CSDRS (Subsection 3.7.1). Subsection 3.7.2.3 provides additional discussion on coupled modeling.

Per Subsection 3.6.3, the main RCS piping and the surge line are qualified to LBB criteria; thus, eliminating postulated breaks in that piping. The LBB criteria are used to evaluate RCS piping 6 inches or larger. Additionally, external loads are applied to the RCS piping for connecting piping that does not meet the LBB requirements. The RCS analysis for pipe breaks uses time-history or equivalent static analysis to determine the structural response due to jet impingement loads, thrust loads, and subcompartment pressure loads.

Section 3.9.1 discusses the various thermal and pressure transients that can occur as a result of plant operations. For the RCS thick-walled piping, a time-varying temperature distribution will occur across the pipe wall section and requires evaluation in accordance with ASME Code Section III, Subsection NB (Reference 3.9-1).

Through-wall heat transfer gradient occurs due to a time dependent convective heat transfer between the inner pipe fluid surface and the outer pipe surface. The outer pipe surface is assumed in an isothermal condition and the inner pipe surface assumes the RCS fluid temperature. The average wall temperature, T_a, is an integrated temperature distribution over time that results from fluid temperature fluctuations. This average temperature distribution over time is used to determine load sets related to cumulative fatigue usage. In accordance with ASME Code, Section III, Subsection NB-3653 (Reference 3.9-1), peak incremental stress intensities are calculated from thermal, pressure, and moment load sets are developed and combined to yield the highest alternating stress intensity ranges. An incremental usage factor is developed based on the ASME material fatigue curves. The procedure is repeated to create the next most severe alternating stress range, until the combinations have an allowable number of cycles less than 10^{11}. The cumulative fatigue usage factor is the summation of all incremental usage factors at this cycle limit.

3.9.3.1.5 ASME Code, Section III, Class 2 and 3 Components

The ASME Code, Section III (Reference 3.9-1), Subsections NC and ND provide the required stress qualification criteria for ASME Code, Section III, Class 2 and 3 components including vessels, valves, and pumps. Table 3.9-3 provides the loading combinations used in qualification of these components. The load definitions from Table 3.9-3 are located in Table 3.9-5. Table 3.9-8 provides the stress criteria for these components. Section 3.12 provides stress evaluation criteria and analysis methods that are specific to Class 2 and 3 piping.

Code Class 2 and 3 components that are subject to thermal cyclic effects or dynamic cyclic loads are subject to fatigue evaluations per NUREG-0800, SRP 3.9.3 (Reference 3.9-27). Fatigue analyses of components and supports are completed in accordance with the ASME Code, Section III requirements and are based on a 60 year

design life of the plant. The environmental impact on fatigue of Class 2 and 3 components will follow guidelines established by the NRC at the time of the actual analysis.

Class 2 and 3 safety-related active components (including valves and pumps) and the associated supports require functionality, functional capability, and operability. Functionality and functional capability for these components and supports consist of the ability of a component, including its supports, to deliver a rated flow and to retain dimensional stability when the design and service loads, and their resulting stresses and strains, are at prescribed ASME Code, Section III (Reference 3.9-1) service levels. The operability of the components and supports consists of the ability of an active component, including its support, to perform the mechanical motion required to fulfill its designated safety function consistent with operational limits and Technical Specification requirements. Active valves and pump requirements are further described in Subsection 3.9.3.3 on pump and valve operability assurance.

In addition to the above requirements, stress demand is kept low enough in relation to stress capacity limits for these components so that the pressure-retaining boundary integrity is maintained.

3.9.3.2 Design and Installation of Pressure-Relief Devices

The design of pressure relieving valves complies with the requirements of ASME Code, Section III (Reference 3.9-1), Appendix O, “Rules for the Design of Safety Valve Installations.” When there is more than one valve on the same run of pipe, the sequence of valve openings is based on the anticipated sequence of valve opening. This sequence is determined by the setpoint pressures or control system logic. The applicable stress limits are satisfied for the components in the piping run and connecting components including supports. The reaction forces and moments are based on a DLF of 2.0 unless a dynamic structural analysis is performed to calculate these forces and moments.

3.9.3.2.1 Pressure Relief Devices Connected to the Pressurizer

The pressurizer safety valves provide over-pressure protection for the RCS. The safety valves connected to the pressurizer are the only ASME Code, Section III (Reference 3.9-1), Class 1 pressure relief valves in the US-APWR.

The pressurizer safety valves are supported by the downstream piping module of safety depressurization valves and the safety valves. The safety valves are connected to four nozzles located in the pressurizer upper head. The spring loaded safety valves are designed to prevent system pressure from exceeding the design pressure by more than 10%.

If the pressure exceeds the setpoint of the safety valve, the valve opens and steam is discharged to the pressurizer relief tank. The pressurizer volume is sized so that opening of the safety valve is not required for any Level A service condition transient. The connecting pipe between the pressurizer and the safety valves includes a loop seal in order to prevent the leak of the steam and any non-condensible gas in the upper portion of the pressurizer.

The valve opening generates transient thrust forces at each change in flow direction or area. The analysis of the piping system and support considers the transient forces associated with valve opening.

For each pressurizer safety valve, an analytical hydraulic model is developed. The piping from the pressurizer nozzle to the pressurizer relief tank sparger is modeled as a series of single pipes. The pressurizer is modeled as a reservoir that contains steam at constant pressure and temperature. Fluid acceleration inside the pipe generates reaction forces on the segments of the line that are bounded at either end by an elbow or bend. Reaction forces resulting from fluid pressure and momentum variations are calculated. These forces are defined in terms of the fluid properties for the transient hydraulic analysis.

3.9.3.2.2 Pressure Relief Devices for Class 2 Systems and Components

Pressure relieving devices for ASME Code, Section III (Reference 3.9-1), Class 2 systems include the safety valves and power operated relief valves on the steam line and the relief valve on the containment isolation portion of the normal RHRS.

The design and analysis requirements for the safety and relief valves and discharge piping for the steam line are described in Subsection 10.3.2.

In addition to providing over-pressure protection for the normal RHRS, the relief valve also provides low temperature over-pressure protection for the RCS. The location and connection for the valve on the RHRS are discussed in Subsection 5.4.7.

3.9.3.2.3 Design and Analysis Requirements for Pressure Relieving Devices

The design of pressure-relieving devices can be generally grouped in two categories: open discharge and closed discharge.

3.9.3.2.3.1 Open Discharge Relief Device

An open discharge is characterized by a relief or safety valve discharging to the atmosphere or to a vent stack open to the atmosphere. The design and analysis of open discharge valve stations includes the following considerations:

- Stresses in the valve header, the valve inlet piping, and local stresses in the header-to-valve inlet piping junction due to thermal effects, internal pressure, seismic loads, and thrust loads.
- Thrust forces includes both pressure and momentum effects.
- Where more than one safety or relief valve is installed on the same pipe run, valve spacing requirements are as specified in the ASME Code (Reference 3.9-1).
- The minimum moments to be used in stress calculations are those specified in the ASME Code (Reference. 3.9-1).
- The effects of the valve discharge on piping connected to the valve header.

- The reaction forces and moments used in stress calculations include the effects of a DLF, or are the maximum instantaneous values obtained from a time-history structural analysis.

3.9.3.2.3.2 Closed Discharge Relief Device

The closed discharge system is characterized by piping between the valve and a tank or some other terminal end. Under steady-state conditions, there are no net unbalanced forces. The initial transient response and resulting stresses are determined using either a time-history computer solution or a conservative equivalent static solution. In calculating initial transient forces, pressure and momentum terms as well as water slug effects are included.

3.9.3.3 Pump and Valve Operability Assurance

Mechanical components that are classified as safety-related must be shown as capable of performing their function during the life of the plant under the various postulated loading conditions. Active pumps and valves have faulted condition functional requirements. The design and service limits specified by the ASME Code, Section III (Reference 3.9-1) are established to confirm the pressure-retaining or support function of the ASME Code-class component. To assess the functional capability of the required components to operate, additional criteria and considerations, including collapse and deflection limits, are developed. These criteria are included as part of the equipment specifications. Section 3.10 provides details of these required criteria.

3.9.3.3.1 Pump Operability

Active pumps are those whose operability is relied upon to perform a safety-related function during transients or events considered in the respective operating condition categories. Inactive pumps are those whose operability is not relied upon to perform a safety-related function for the various transients and plant conditions. Table 3.9-7 lists the active pumps. The COL Applicant is to identify the site-specific active pumps.

Table 3.9-6 provides the stress limits used for active Class 1 pumps. Table 3.9-8 provides the stress limits used for active Class 2 and Class 3 pumps.

3.9.3.3.2 Valve Operability

Active valves are those whose operability is relied upon to perform a safety-related function during transients or events considered in the respective operating condition categories. Inactive valves are those whose operability is not relied upon to perform a safety-related function for the various transients and plant conditions. Active valves are identified in Subsection 3.9.6.

Table 3.9-6 provides the stress limits used for active Class 1 valves. Table 3.9-8 provides the stress limits used for active Class 2 and Class 3 valves.

Active valves are subjected to a series of tests and inspections prior to service and during the plant life. These tests and inspections, along with controls on maintenance and operation, provide the appropriate reliability of the valve for the design life of the plant.

Prior to installation, the following tests, as appropriate to the function and mission of the valve, are performed: shell hydrostatic test, backseat and main seat leakage tests, disc hydrostatic tests, and operational tests to verify that the valve opens and closes.

Cold hydro tests, hot functional tests, periodic inservice inspections, and periodic inservice operations are performed in situ to verify the functional capability of the valve.

Section 3.11 describes the operability qualification of motor operators for the environmental conditions.

For active valves with extended structures, an analysis of the extended structure is performed for equivalent static SSE loads applied at the center of gravity of the extended structure.

In addition to these tests and analyses, a representative number of valves of each design type are tested for verification of operability during a simulated Level D service condition SSE condition event by demonstrating operational capabilities within the specified limits.

Valve sizes that cover the range of sizes in service are tested.

When seismic qualification is based on dynamic or equivalent static load testing for structures, systems or subsystems that contain mechanisms that must change position in order to function, operability testing is performed for the SSE preceded by one or more earthquakes. The number of preceding earthquakes is calculated based on IEEE Std 344-2004 (Reference 3.9-34) to provide the equivalent fatigue damage of two SSE events.

The seismic qualification testing procedures for valve operability testing are as follows:

- The valve is mounted in a manner that will conservatively represent typical valve installations. The valve includes the operator, accessory solenoid valves, and position sensors when attached to the valve in service.

The operability of the valve during a Level D service condition is demonstrated by satisfying the following criteria:

- A static load or loads equivalent to those resulting from the accelerations due to Level D service conditions is applied to the extended structure center of gravity so that the resulting deflection is in the nearest direction of the extended structure. The design pressure of the valve is applied to the valve during the static deflection tests.
- The valve is cycled while in the deflected position. The valve must function within the specified operating time limits while subject to design pressure.
- Electrical motor operators, position sensors, and pilot solenoid valves necessary for operation are qualified in accordance with IEEE seismic qualification standards (Reference 3.9-15). Section 3.10 describes the methods and criteria used to qualify electrical equipment.

Active valves that do not have an extended structure, such as check valves and safety valves, are considered separately.

Check valves are characteristically simple in design, and their operation is not affected by seismic accelerations or the maximum applied nozzle loads. The check valve design is compact, and there are no extended structures or masses whose motion could cause distortions that could restrict operation of the valve. These valves are designed such that if structural integrity is maintained, the valve operability is maintained. In addition to these design considerations, check valves also undergo in-shop hydrostatic test, in-shop seat leakage test, and periodic in situ valve testing and inspection.

Pressurizer and main steam safety valves are qualified for operability in the same manner as valves with extended structures. The qualification methods include analysis of the bonnet for equivalent static SSE loads, in-shop hydrostatic and seat leakage tests, and periodic in-situ valve inspection.

To verify analysis methods, representative safety valves are tested. This test is described as follows:

- The safety valve is mounted to represent the specified installation.
- The valve body is pressurized to its normal system pressure.
- A static load representing the Level D service condition load is applied to the top of the valve bonnet in the weakest direction of the extended structure.
- The pressure is increased until the valve actuates.
- Actuation of the valve at its setpoint provides for operability during the Level D service condition load.

Using these methods, the active valves in the system are qualified for operability during a Level D service condition event. These methods conservatively simulate the seismic event, and confirm that the active valves perform their safety-related function when necessary.

3.9.3.4 Component Supports

Supports and their attachments for essential ASME Code, Section III (Reference 3.9-1), Class 1, 2, and 3 components are designed in accordance with Subsection NF up to the interface of the building structure, with jurisdictional boundaries as defined by Subsection NF. The building structure component supports (connecting the NF support boundary component to the existing building structure) are designed in accordance with “Nuclear Facilities-Steel Safety-Related Structures for Design, Fabrication and Erection”, ANSI/AISC N690, (1994 edition) (Reference 3.9-39), and the AISC Manual for the Design, Fabrication, and Erection of Structural Steel (Reference 3.9-40). The applicable loading combinations and allowables used for design of supports are shown on Tables 3.9-3, 3.9-4, and 3.9-5. The stress limits are in accordance with ASME Code, Section III (Reference 3.9-1), Subsection NF and Appendix F, “Service Limits and Loading Combinations for Class 1 Linear-Type Supports”, RG 1.124 (Reference 3.9-41) and “Service Limits and Loading Combinations for Class 1 Plate-and-Shell-Type Component Supports”, RG 1.130 (Reference 3.9-42).

The maximum calculated static and dynamic deflections of the component at support locations do not exceed the allowable limits specified in the component design specification. Seismic category II pipe supports are designed so that the SSE would not cause unacceptable structural interaction or failure. The support design follows the intent and general requirements specified in ASME Code, Section III (Reference 3.9-1), non-mandatory Appendix F. These requirements are used to evaluate the total design load condition with respect to the requirements of the SSE condition to assure that the structural integrity of the pipe supports is maintained.

Supports are classified into two classifications as manufactured standard support, or supplementary steel support described as follows:

Manufactured Standard Supports

Typical manufactured standard supports are load-rated and based on ASME Level A (Normal), Level B (Upset), Level C (Emergency), and Level D (Faulted) service conditions. Their design and testing are in accordance with the ASME Codes, Section III (Reference 3.9-1) or equivalent structural codes. The following major manufactured standard supports are typically used and are described as follows.

3.9.3.4.1 Spring Hangers

Spring hangers provide dead weight support and allow a specified down travel and up travel in excess of the specified cold and hot thermal movements. The operating load on spring hangers is the load caused by dead weight and spring hangers are sized to these loads. The hangers are evaluated for expected movements and field-calibrated to assure that adequate consideration of operational thermal conditions has been included.

3.9.3.4.2 Snubbers

Snubbers are designed to allow for the free thermal expansion of piping and components in the axial direction of the snubber while restraining sudden dynamic movement of piping and components. The loads on snubbers are the loads created by dynamic events (e.g., seismic, building vibrations as applicable due to LOCA, and safety relief valve discharge, discharge through a relief valve line or valve closure) during various operating conditions. Snubbers restrain piping against a response to the dynamic excitation and to the associated differential movement of the piping system support anchor points. The criteria for locating snubbers and ensuring adequate load capacity, the structural and mechanical performance parameters used for snubbers and the installation and inspection considerations for the snubbers are as follows.

3.9.3.4.2.1 Assurance of Snubber Functionality

A structural analysis and systems evaluation is performed. Systems and components which utilize snubbers as shock arresters are analyzed to determine the interaction of these devices with the systems and components to which they are attached. Snubbers can be used as shock arresters, and when used for multiple applications, cyclic fatigue is considered.

Factors included in the fatigue evaluation are as follows:

- Component movement or amplitude of the unsupported system.

- Interaction force from system component to snubber and corresponding reaction on system or component due to restricting motion.
- Frequency of system vibration and number of load cycles.
- Verification of system or component and snubber fatigue strength

A fatigue evaluation is not required if it can be demonstrated that:

- The number of load cycles that the snubber will experience during normal plant operating conditions is small (less than 2,500), or if the motion during normal plant operating conditions does not exceed snubber design movement range.
- Overall thermal movements are verified and can be shown not to exceed the snubber lock-up velocity. Snubbers utilized in systems or components that experience high thermal growth rates, either during normal operating conditions or as a result of anticipated transients, are checked.

3.9.3.4.2.2 Required Load Capacity Versus Load Demand

The loading demand calculated in the piping dynamic analysis, and described in Subsection 3.7.3.1, cannot exceed the snubber load capacity for the design, normal (Level A), upset (Level B), emergency (Level C), and faulted (Level D) ASME service load conditions.

3.9.3.4.2.3 Snubber Location Requirements

Snubbers are located primarily in systems where dynamic support is required because thermal growth of the piping prohibits the use of rigid supports. The snubber locations and snubber support directions are initially considered in areas of high thermal growth and regions of dynamically induced high stresses. These locations and support directions are redefined by performing the dynamic analysis of the piping and support system. The piping stresses and support loads must meet the code requirements.

Physical locations for placing snubbers in the plant must consider on-going maintenance and the ability to set snubber position.

3.9.3.4.2.4 Snubber Mechanical and Structural Properties

In order to assure adequate snubber performance the following property characteristics are required:

- Consideration of appropriate analytical structural stiffness used in system modeling. The structural stiffness is affected by the overall snubber support assembly and alignment of the assembly. Flexibility in support assembly structure and alignment of the snubbers can affect the overall structural response of the system and associated components. The assembly stiffness is based on an evaluation of structural, hydraulic, and thermal properties and used in the system model.
- When multiple snubbers are used in the same support, a determination of proportional load sharing is required by determining the alignment and fitting clearances and tolerances along with the position angle of snubber placement.

3.9.3.4.2.5 Design Specifications

The design specification contains the following and includes the performance, structural, and mechanical properties of the snubbers as provided in the above subsections:

1. General functional requirement
2. Operating environment
3. Applicable codes and standards
4. Materials of construction and standards for hydraulic fluids and lubricants
5. Environmental, structural, and performance design verification tests
6. Production unit functional verification tests and certification
7. Packaging, shipping, handling, and storage requirements
8. Description of provisions for attachments and installation
9. Quality assurance and assembly quality control procedures for review
10. Acceptance by the purchaser

The COL Applicant is to assure snubber functionality in harsh service conditions, including snubber materials (e.g., lubricants, hydraulic fluids, seals).

3.9.3.4.2.6 Considerations for Inspection, Testing, Repair, and/or Replacement of Snubbers

An installation instruction manual contains complete instructions for the testing, maintenance, and repair of the snubber. It contains the required inspection locations and the periods of inspection. The program for inservice examination and testing of snubbers in the completed US-APWR construction is prepared in accordance with the requirements of ASME Code, Section XI (Reference 3.9-43) and ASME OM Code (Reference 3.9-13). Applicable industry and regulatory guidance is used including RG 1.192 (Reference 3.9-44). The intervals for visual examination are the subject of Code Case OMN-13 (Reference 3.9-45), which is accepted under the RG 1.192 (Reference 3.9-44). The examination and test procedures for the snubber is included in the IST program plan, developed per the implementation schedule as described in Chapter 13, Section 13.4. The pipe support design specification requires that hydraulic snubbers be equipped with a fluid level indicator so that the level of fluid in the snubber can be ascertained.

Snubber thermal movement is reviewed, adequate clearance and gaps are verified, including motion measurements, and acceptance criteria assure compliance with ASME Code, Section III (Reference 3.9-1), Subsection NF.

3.9.3.4.2.7 Snubber Design and Testing

Snubbers are designed to meet operational requirements for withstanding sudden dynamic motion due to earthquakes or sudden transient events. Snubbers must be capable of moving freely during thermal cycling under various modes of plant operation. In addition, snubbers are designed to structural capacity limits that are designated by the manufacturer. Design specifications require specific lock-up rates under dynamic

loadings and free motion during thermal movements of snubbers that support plant components. The ASME Code, Section III, Subsection NF (Reference 3.9.1) is used as a basis for structural design of snubbers.

Important considerations in snubber design involve the following considerations:

1. ASME level A, B, C, and D service loads are applied and structural capacity checks are compared to the manufacturer's design and/or test structural capacities associated with these ASME levels.
2. The snubber manufacturer supplies stiffness values for the model snubber, however stiffness consideration is taken for the effect of snubber end hardware configurations and attached supplementary steel supports. The combined effect is evaluated and a representative piping stress analysis model stiffness is derived.
3. The as-built snubber orientation is examined to determine if snubber binding could occur during component thermal motion and if the snubber is aligned outside of its manufacturer's recommended settings.
4. When multiple snubbers are used at a component location, an evaluation is performed at each application location to determine the effect of as-built misalignment. This multiple snubber misalignment requires a mechanistic evaluation of stiffness and load proportioning to each snubber.
5. For large bore snubbers of greater than 50 kip capacity, the recommended snubber design and test recommendations provided in NUREG/CR-5416 (Reference 3.9-46) are followed.
6. Specific environmental design considerations and snubber functionality is assured under harsh service conditions. See Subsection 3.9.3.4.2.5.

Important considerations in a snubber test program include but are not limited to the following:

1. Snubber cold position to hot position thermal movement is determined as part of the piping stress analysis and verified visually during initial plant operation. If plant-verified thermal movements are determined outside of the analytical design range, an evaluation of thermal movement acceptability is performed and required adjustments are made to either the stress model or the snubber configuration.
2. Based on initial in-situ snubber dynamic lock-up testing and thermal motion testing, a comparison of test data and analytical data (force and/or displacement time histories due to earthquakes and/or dynamic transients) assures that the piping or component stress analysis model and as-built snubber configuration performs within the analytical boundaries. For hydraulic snubbers, tested control valve bleed rates are compared with predicted rates of thermal movement under thermal transient conditions. Appropriate control valve adjustments are made as required. Sample load testing beyond snubber manufacturer rated service loads is performed to assure snubber functional compliance.
3. In order to assure continual functional operation of snubbers associated with safety-related components, the licensee is required to develop an ASME Section XI (Reference 3.9-43) in-service snubber testing program and an associated

table or database of snubbers requiring inspection. This table or database includes detailed information for snubbers that are associated with a safety-related component or system. This information can include frequency of inspection, hot and cold movements, service life, vendor identification information, service and environmental conditions, ASME Code designation, location reference and installation drawing references and other necessary specific data.

3.9.3.4.2.8 Snubber Installation Requirements

A snubber installation specification with appropriate drawing references, and hot and cold settings listed, is developed. In addition, instructions for adjusting and maintaining snubber condition are provided.

3.9.3.4.2.9 Snubber Examination and Testing

Prior to and after plant operation, snubbers are required by Technical Specifications to be examined and tested in accordance with the ASME Code OM, Subsection ISTD (Reference 3.9-13). The examination determines that appropriate snubber orientation and condition, cold settings, snubber reservoir fluid level and connections, and assures that snubbers are designed and installed in accordance with the manufacturer's recommendations.

3.9.3.4.3 Struts

Struts are pin-connected manufactured rigid passive axial supports with no active mechanism. Struts are used as rigid restraints at locations on piping and components where minor thermal motion occurs. The use of struts assists in stabilizing piping systems subject to the dynamic effects of earthquakes or dynamic transient events.

Supplementary Steel Supports

Supplementary steel supports are designed in accordance with the ASME Section III Subsection NF (Reference 3.9-1). These supports are fabricated from steel sections such as Steel tubing, wide flange sections, plate steel, and angle steel. These supports are usually welded in a permanent configuration and cannot easily be disassembled like manufacturer type supports that are pinned or bolted. Criteria specific to the design of supplementary pipe supports is contained in section 3.12. Two classes of supplementary steel supports are frame type supports and special engineered pipe supports as specified below.

3.9.3.4.4 Frame Type Pipe Supports

Frame type pipe supports are generally used in environmental conditions not suitable for manufactured supports that have mechanical pinned connections. Similar to struts, frame type supports are not used at locations where the restraint of thermal pipe movement is excessive.

The design loads on frame type pipe supports are in accordance with those defined in Section 3.12 for pipe supports. Hot or cold gaps are incorporated in the design. Friction between the pipe and frame support that occurs as a result of sliding, considers an appropriate coefficient of friction to calculate friction loading on the support. Seismic

inertia loads as well as static seismic loads are considered in the design of frame supports per ASME Code, Section III (Reference 3.9-1), Subsection NF.

For insulated pipes, special pipe guides such as pipe saddles with one or two way restraint may be used in order to minimize the heat loss of piping systems.

Frame type supports have a limited total gap of 1/8th inch to avoid thermal binding due to radial thermal expansion of the pipe. For large pipes with higher temperatures, this gap is evaluated to assure that no thermal bending occurs. The minimum total gap is specified to assure that it is adequate for the thermal radial expansion of the pipe to avoid any thermal binding.

3.9.3.4.5 Special Engineered Pipe Supports

Special engineered pipe supports are engineered pipe supports other than manufactured standard supports or supplementary steel supports. Special engineered supports are supports that use non-standard specialized components and can have both mechanical and structural characteristics. These support types are used generally on systems that have high thermal expansion and require seismic or vibration support.

The design criteria and dynamic testing requirements for the ASME Code, Section III (Reference 3.9-1) piping supports are as follows:

- The supports for ASME Code, Section III (Reference 3.9-1), Class 1, 2, and 3 components including pipe supports satisfy the requirements of the ASME Code, Section III (Reference 3.9-1), Subsection NF. The welded connections of tube steel members satisfy the requirements of the Structural Welding Code, ANSI/AWS D1.1 (Reference 3.9-47), Section 10. The boundary between the supports and the building structure is based on the rules found in the ASME Code, Section III, (Reference 3.9-1), Subsection NF. Table 3.9-1 presents the loading conditions. Table 3.9-4 summarizes the load combinations. The stress limits are presented in Tables 3.9-6 and 3.9-8 for the various service levels.
- The criteria for Appendix F in ASME Code, Section III (Reference 3.9-1), is used for the evaluation of Level D service conditions. When supports for components not built to ASME Code, Section III (Reference 3.9-1) criteria are evaluated for the effect of Level D service conditions, the allowable stress levels are based on tests or accepted industry standards comparable to those in Appendix F of ASME Code, Section III (Reference 3.9-1).
- In order to provide for operability of active equipment, including valves, ASME Code, Section III limits for Level C service loadings are met for the supports of these items.
- Dynamic loads for components loaded in the elastic range are calculated using DLFs, time-history analysis, or any other method that accounts for elastic behavior of the component. A component is assumed to be in the elastic range if yielding across a section does not occur. Local yielding due to stress concentration is assumed not to affect the validity of the assumptions of elastic behavior. The stress allowables of Appendix F for elastically analyzed components are used for Code components. Inelastic stress analysis is not used.

The use of baseplates with concrete expansion anchors is minimized in the US-APWR. Concrete expansion anchors may be used for pipe supports. For these pipe support baseplate designs, the baseplate flexibility requirements of IE Bulletin 79-02, Revision 2 (Reference 3.9-48), are met by accounting for the baseplate flexibility in the calculation of anchor bolt loads.

3.9.3.4.6 ASME Code, Section III, Class 1, 2, and 3 Component Supports

The establishment of the design/service loadings and limits are in accordance with the ASME Code, Section III (Reference 3.9-1), Division 1, Article NCA-2000 and Subsection NF. These loadings and stress limits apply to the structural integrity of components and supports when subjected to combinations of loadings derived from plant and system operating conditions and postulated plant events. The combination of loadings and stress limits are included in the design specification of each component and support. Where the design and service stress limits specified in the code do not necessarily provide direction for the proper consideration of operability requirements for conditions which warrant consideration, Section II.3 and Appendix A of SRP 3.9.3 (Reference 3.9-27), RG 1.124 (Reference 3.9-41) and RG 1.130 (Reference 3.9-42) are used for guidance. Where these stress limits apply, the treatment of functional capability, including collapse, deformation and deflection limits are evaluated and appropriate information is developed for inclusion into the design specification.

ASME Code, Section III (Reference 3.9-1) component supports are designed, manufactured, installed, and tested in accordance with all applicable codes and standards. Supports include hangers, snubbers, struts, spring hangers, frames, energy absorbers, and limit stops. Pipe whip restraints are not considered as pipe supports.

Section 3.13 provides the requirements for the design of bolts for component supports. Review of programs for ensuring bolting and threaded fastener adequacy and integrity is performed under NUREG-0800, SRP 3.13 (Reference 3.9-49).

The design and installation of all anchor bolts are performed in accordance with Appendix B to “Anchoring to Concrete”, American Concrete Institute (ACI) 349 (Reference 3.9-50) subject to the conditions and limitations specified in RG 1.199 (Reference 3.9-51).

It is preferable to attach pipe supports to embedded plates; however, surface-mounted baseplates with undercut anchor bolts can be used in the design and installation of supports for safety-related components.

The load combinations and allowable stresses for ASME Code, Section III (Reference 3.9-1), Class 1 component supports are given in Tables 3.9-4 and 3.9-6.

3.9.3.4.6.1 ASME Code, Section III, Class 1 Component Supports Models and Methods

Due to the structural complexity of the ASME Code, Section III, Class 1 component supports and the various load conditions evaluated, the FE method of analysis is utilized. The FE analysis support structure models are developed to determine support stiffness properties based on application of forces from the component to the support

using elastic material properties. In addition, the support will add load to the component through the applied stiffness.

The class 1 component supports are modeled using elements such as beams, plates, and springs, where applicable.

RV supports - The RV is supported by eight steel support pads, which are one-piece with the inlet and outlet nozzle forgings. The support pads are placed on support brackets, which are supported by a steel structure around the RV (baseplate). Radial movement, which results from the vessel expansion and contraction caused by temperature change, is accommodated by sliding surfaces between the shim plates and the support pads while the horizontal load in an earthquake is supported by the support brackets and the baseplate so that the center position of the vessel always remains unchanged. The support brackets, which are of box-shaped structure, are air cooled by the RV compartment cooling fans in order to minimize heat transfer from the RV to the concrete support portions through the support brackets.

SG supports - The SGs are supported by three lateral support locations on the SG shell, an upper lateral support structure, a middle lateral support and a lower lateral support structure, and support columns. The upper and middle lateral support structures on the SG use snubbers. The lower lateral support structure is a structure made of structural steel. The support structures for the upper and middle shell and channel head are designed by considering the thermal expansion of piping. At the same time, they can restrain the horizontal movement of the SG in the event of an earthquake or accidents. The support columns support vertical loads, and the upper and lower ends of the support pipe are pin-jointed, so as not to restrain the movement of the SGs caused by the thermal expansion of the piping.

RCP supports - Each RCP support system consists of a lateral support structure and three support columns that support the vertical loads of the RCP from the slab below. The support structures are constructed entirely of structural steel. The upper and lower ends of the columns are pin-jointed to permit the movement of the pumps caused by thermal expansion of the piping. The lateral support structure is designed considering the thermal expansion of the piping and also restrains horizontal movement of the reactor coolant pump in the event of an earthquake or other design basis accidents. The value of the support stiffness is determined considering the flexibility of the structural support members. The stiffness of the lateral support also includes flexibility of the RCP casing.

Pressurizer supports - The pressurizer is supported by an upper support structure and a lower support skirt. The upper support structure supports the pressurizer using a steel structure, while the lower structure supports the vertical load using a skirt welded to the bottom shell of the pressurizer. The upper support structure does not restrain the movement of the pressurizer caused by thermal expansion, but restrains horizontal movements in the events of an earthquake or accidents.

The structural adequacy of the ASME Code, Section III, Class 1 component support is verified by determining that the load and stress demand on the support is within the ASME Code, Section III (Reference 3.9-1), Subsection NF and Appendix F load and stress capacity allowable limits with adequate stress and load margins to those limits. Externally applied loads for each system operating, system transient, and accident

condition that are generated from the RCL piping analysis are applied to the major component (RV, SG, and pressurizer) and support structure and are appropriately combined with component generated support loads. The combination of loadings considered for each component support within the system, including the designation of the appropriate service stress for each loading combination is verified for consistency with the criteria in Appendix A, RG 1.124 (Reference 3.9-41) and RG 1.130 (Reference 3.9-42). Due to the complexity of the major equipment support structures, computerized FE analysis programs are used to determine the support stresses and reaction loads. The generated stresses and loads from these programs are verified to the appropriate ASME Code, Section III (Reference 3.9-1), Subsection NF and Appendix F equation, stress, and interaction allowable.

The US-APWR uses only analytical stress/load limit methods and does not use the test load method described in Appendix F for qualification of ASME Code, Section III, Class 1 Component supports designed to the ASME Code, Section III (Reference 3.9-1).

3.9.3.4.6.2 ASME Code, Section III, Class 2 and 3 Component Supports Models and Methods

ASME Code, Section III, Class 2 and 3 component supports for the nuclear steam supply system are generally of linear or plate and shell type; however, standard component supports may be used. Compliance with ASME Code, Section III (Reference 3.9-1), Subsection NF and Appendix F is required. ASME Level A, B, C, and D service load and load combination requirements are used in ASME Code, Section III qualification. ASME Code, Section III, Class 2 and 3 piping supports are designed and analyzed as indicated in Section 3.12.

Standard component supports are required to satisfy the requirements for the linear-type presented in this section.

Tables 3.9-4 and 3.9-8 outline the ASME Code, Section III (Reference 3.9-1), Class 2 and 3 component support requirements.

The analyses or test methods and associated stress or load allowable limits that are used in the evaluation of linear supports for Level D service conditions are those defined in Appendix F of the ASME Code, Section III (Reference 3.9-1).

The combination of loadings considered for each component support within a system, including the designation of the appropriate service stress for each loading combination are consistent with the criteria in Appendix A, RG 1.124 (Reference 3.9-41) and RG 1.130 (Reference 3.9-42).

1. Linear- type supports are designed to the following service level and stress limits:

    - Normal – The allowable stresses of Appendix XVII of ASME Code, Section III (Reference 3.9-1), as referenced in subsection NF, are employed for normal condition limits.
    - Upset – Stress limits for upset conditions are the same as normal condition stress limits. This is consistent with Subsection NF-3320 of ASME Code, Section III (Reference 3.9-1).

- Emergency – For emergency conditions, the allowable stresses or load ratings are 33% higher than those specified for normal conditions. This is consistent with subsection NF of ASME Code, Section III (Reference 3.9-1) in which (see NF-3231) limits for emergency conditions are 33% greater than the normal condition limits.
- Faulted – Stress limits are specified in Appendix F which assure that no large plastic deformations will occur (Stress less than 1.2 S_y). If any inelastic behavior is considered in the design, detailed justification is provided for this limit. Otherwise, the supports for active components are designed so that stresses are less than or equal to S_y. Thus, the operability of active components is not endangered by the supports during faulted conditions.

2. Plates and shells supports are designed to the following service level and stress limits:

- Normal – Normal condition limits are those specified in Subsection NF-3320 of ASME Code, Section III (Reference 3.9-1).
- Upset – Limits for upset conditions equal normal condition limits and are consistent with Subsection NF-3320 of ASME Code, Section III (Reference 3.9-1).
- Emergency – For emergency conditions, the allowable stresses or load ratings are 20% higher than those specified for normal conditions.
- Faulted – Same as faulted limits for linear supports.

For active ASME Code, Section III, Class 2 or 3 pumps, support adequacy is proven by satisfying the criteria in Tables 3.9-4 and 3.9-8. In addition to these requirements for meeting stress limits, an evaluation of pump/motor support misalignment is required.

Active valves are, in general, supported only by the pipe attached to the valve. Exterior supports on valves are generally not used.

3.9.3.4.7 Snubbers Used as Component Supports

Snubbers are considered manufactured standard support components. Snubber manufacturers provide various sizes of snubbers and rated loading consistent with ASME Level A, B, C, and D service conditions. Snubbers are generally hydraulic; however, there are mechanical snubbers available that lock-up at equivalent hydraulic velocities. Details of snubber design, testing, operation, maintenance, inspection, and other functional characteristics are presented in this subsection.

Snubber manufacturers are required to construct safety-related snubbers to ASME Code, Section III (Reference 3.9-1), Subsection NF standards. The US-APWR layout considerations include access for the snubber testing, inspection, and maintenance. The location and line of action of a snubber are selected based on the necessity of limiting seismic stresses in the piping and nozzle loads on equipment and allowing for unrestricted thermal growth.

Snubbers are modeled as stiffness elements in the piping system seismic stress analysis. Under thermal growth conditions, there is little stiffness; however, under sudden dynamic motion the stiffness is large.

With the implementation of LBB criteria and the elimination of the analysis of dynamic effects of pipe breaks detailed in Subsection 3.6.3, the use of snubbers is minimized in LBB qualified piping systems.

Snubber operability determination is considered part of the ASME Code, Section XI (Reference 3.9-43) inspection program. The ASME OM Code (Reference 3.9-13) is used to develop the inservice testing plan.

3.9.4 Control Rod Drive Systems

3.9.4.1 Descriptive Information of CRDS

The control rod drive system (CRDS) provides one of the independent reactivity control systems, driving a rod control cluster assembly (RCCA) which consists of 24 rodlets and acts as a neutron absorber in the reactor core.

The CRDM inserts and withdraws the RCCA, thus, adjusting the core output. It is operated and controlled by the CRDM control system.

3.9.4.1.1 CRDM

The CRDM for the US-APWR is of the magnetically operated jacking type, which is based on the L-106A type CRDM which has been used in many operating plants in the United States and Japan.

The CRDM consists of a pressure housing, latch assembly, drive rod assembly, and coil stack assembly. The pressure housing involves the latch assembly and the drive rod assembly, and supports the coil stack assembly on the outside of the pressure housing.

The coil stacks are energized sequentially by electric power, which cause magnetic power in the latch assembly to move the latches. The latches hold and move the drive rod assembly which is connected with the RCCA. When de-energized, the coil stacks and the latches release the drive rod assembly. Then the RCCA is inserted within the core by gravity.

The position of the RCCA is measured by the rod position indicator assembly, which is mounted surrounding the rod travel housing. The rod position indicator assembly includes discrete coils which magnetically sense the ferromagnetic drive rod assembly when it moves through the coil centerline. This system is further described in Subsection 7.7.1.4.

A total of 69 CRDMs are mounted on top of the RV closure head and installed directly to the closure head in a vertical position.

Figure 3.9-3 show one CRDM unit that consists of four main assemblies as described below. The US-APWR CRDM design is improved in comparison to standard CRDM designs as follows.

- Butt welding is applied instead of a threaded connection and canopy seal weld to assure an extremely low probability of leakage, per GDC 14. Canopy seal weld design has had some experience of leakage in the United States and Japan.
- Chrome carbide coating is applied on tip of the latch arms where it engages the control rod drive rod to improve resistance to wear.

The pressure housings, without canopy seal welds, have been used in several plants in the United States and in Japanese PWR plants. Chrome carbide coating of latch arm surfaces has been applied to Japanese plants.

1. Pressure housing

The pressure housing consists of a rod travel housing and a latch housing, both of which are butt welded. The latch housing is butt welded to a CRDM nozzle of the RV head. This butt welded design results in an extremely low probability of primary coolant system leakage, per GDC 14.

The pressure housing is categorized as a Class 1 component in RG 1.26 (Reference 3.9-52) in that it constitutes a pressure boundary of the RCS. It is designed in accordance with ASME Code, Section III (Reference 3.9-1), Subsection NB. The material of the CRDM is described in Subsection 4.5.1.

The rod travel housing is the upper part of the CRDM housing, which enshrouds the drive rod, facilitating its travel during withdrawal and insertion of the RCCA.

An eye bolt is attached on top of the rod travel housing for handling purposes, including handling the CRDM at the plant site, if necessary.

The latch housing is the lower part of the CRDM housing, which contains the latch assembly. The latch assembly is fixed on the inner shelf of the cylindrical housing and is positioned by a threaded fastener. The outside of the latch housing supports the coil stack assembly.

2. Latch assembly

The functions of the latch assembly are to withdraw, insert, or hold the drive rod which is connected to the RCCA. Another function is to release the drive rod to rapidly insert the RCCA into the core when electrical power of the coils is cut off.

For that purpose, the Movable Gripper latches are moved up or down in 5/8th inch steps by the lift pole when its electric coil is energized or de-energized. The stationary gripper latches hold the drive rod assembly while the movable gripper latches are repositioned for the next stepping motion.

3. Drive rod assembly

The major part of the drive rod assembly is a long tube with grooves, the drive rod made of martensitic stainless steel. The assembly includes a coupling device to connect with the RCCA at the bottom end. The drive rod has machined grooves on a 5/8th inch pitch. The CRDM latches engage these grooves when holding or moving the drive rod up or down.

To permit remote operation, a disconnect button, a disconnect rod, and a locking button are located on the top of the drive rod assembly to manipulate the coupling device at the bottom end of the rod to connect or disconnect the RCCA.

4. Coil stack assembly

The coil stack assembly is installed outside of the latch housing and is comprised of coil housings, an electrical conduit and connector, and three coils.

The functions of the coils are as follows (see Figure 3.9-3):

- Lift coil (top) – lifts the movable gripper pole which holds the drive rod.
- Movable gripper coil (middle) – hold or release the drive rod caused by the moveable gripper latches
- Stationary gripper coil (bottom) – hold or release the drive rod caused by the stationary gripper latches and support the load of the drive rod assembly.

If necessary, the coil stack assembly can be removed and replaced.

3.9.4.1.2 Control Rod Withdrawal

The control rod withdrawal sequence is described as follows:

In the drive rod holding condition, both the Movable Gripper and the stationary gripper coil are energized, and the movable gripper and stationary gripper latches are swung into the grooves of the drive rod to increase the reliability of holding the drive rod. At this moment, the drive rod is supported by the stationary gripper latches, because there is a small gap (approximately 0.032 inches) between the top surface of the movable gripper latch tips and the opposing groove face of the drive rod. Prior to the start of the withdrawal sequence, the movable gripper coil is de-energized to open the moveable gripper latch arms. Then the withdrawal sequence is begun as following.

1. Movable gripper coil is de-energized

The movable gripper latch plunger moves down by the action of gravity and a spring force. Then, the moveable gripper latches are swung out of the drive rod groove by a linkage which connects the moveable gripper latch plunger and the moveable gripper latches. The drive rod is held by the stationary gripper latches only. This is the initial condition before a withdrawal or insertion sequence begins.

2. Moveable gripper coil is energized

The movable gripper latch plunger rises up and the moveable gripper latches are swung into a groove of the drive rod, actuated by the linkage connecting the movable gripper latch plunger and the movable gripper latches.

3. Stationary gripper coil is de-energized

The stationary gripper latch plunger moves down by spring force action and gravity. Then, the stationary gripper latches are swung out from the drive rod by linkage

connecting the stationary gripper latch plunger and the stationary gripper latches. The moveable gripper latches support the drive rod load.

4. Lift coil is energized

The movable gripper pole rises up one step (5/8th inch), thus, lifting the drive rod/RCCA one step (5/8th inch) out of the reactor core.

5. Stationary gripper coil is energized

The stationary gripper latch plunger rises up, the stationary grippe latches are swung into a drive rod groove and the stationary gripper latches lift the drive rods slightly, taking the load off the moveable gripper latches (approximately 0.032 inches). The drive rod load is transferred from the movable gripper latches to the stationary gripper latches.

6. Movable Gripper Coil is de-energized

The movable gripper latch plunger moves down by spring force and gravity, and the moveable gripper latches are swung out of engagement with the drive rod.

7. Lift coil is de-energized

The movable gripper pole goes down one step (5/8th inch) and is in position for the next latch-lift cycle.

The drive rod is continuously raised by the “stepping” sequence described above. When the desired “parking” or holding position is reached, the drive rod is stationary; held by the stationary gripper latches with the movable gripper coil energized. (A small gap exists between the moveable gripper latches and groove.)

3.9.4.1.3 Control Rod Insertion

The control rod insertion sequence is as follows:

With the drive rod in the “holding” condition (i.e., the stationary gripper latches engaged and holding, the movable gripper coil energized), the movable gripper latches in the groove with the small gap at the interface.

1. De-energize the movable gripper coil

The movable gripper latch plunger moves down and the movable gripper latches are swung out of the drive rod. The drive rod is held by the stationary gripper latches only. This is the condition before an insertion sequence.

2. Lift coil is energized

The movable gripper pole rises up one step (5/8th inch). The drive rod is held by the stationary gripper latches.

3. Movable gripper coil is energized

The movable gripper latch plunger rises up and the movable gripper latches are swung into a groove of the drive rod.

4. Stationary gripper coil is de-energized

The stationary gripper latch plunger returns down by spring force and gravity, and the stationary gripper latches are swung out from the groove of the drive rod. The movable gripper latches supports the drive rod load.

5. Lift coil is de-energized

The movable gripper pole goes down one step (5/8th inch) lowering the drive rod/RCCA down one step (5/8th inch) into the core.

6. Stationary gripper coil is energized

The stationary gripper latch plunger rises up. The stationary gripper latches are swung into a drive rod groove and the stationary gripper latches lift up the drive rod slightly (approximately 0.032 inches). The drive rod load transfers from the movable gripper latches to the stationary gripper latches.

7. Movable gripper coil is de-energized

The movable gripper latch plunger moves down and the movable gripper latches are swung out of engagement with the drive rod.

The drive rod is continuously lowered by the “stepping” sequence described above. When the desired rod insertion depth is reached, this holding position is maintained by the stationary gripper latches engaging the drive rod. The movable gripper coil is energized (with the small gap between latches and groove).

3.9.4.1.4 Holding and Tripping of the Control Rods

To maintain holding the control rods, both the movable gripper coil and the stationary gripper coil are energized. Thus, the movable gripper latches and the stationary gripper latches engage grooves of the drive rod, which is connected to the RCCA. At this moment, the drive rod load is supported by the stationary gripper latches while there is the small gap between the movable gripper latches and the drive rod groove. Leaving the movable gripper coil energized is a back-up to hold the drive rod if the stationary gripper coil current is interrupted by some single failure.

To trip the control rods, the current is cut off to both the movable gripper and stationary gripper coils. The movable gripper and stationary gripper latches are swung out from engagement with the drive rod by spring force in the latch mechanisms and gravity, and without support, the RCCA will insert, causing a “scram.”

3.9.4.1.5 Testing Program

The test program of the CRDM is described in Subsection 3.9.4.4.

3.9.4.2 Applicable CRDS Design Specifications

According to 10 CFR 50.55a (Reference 3.9-29) and GDC 1, 2, 4, 14, and 29 requirements, the CRDM is designed, fabricated, and tested in accordance with quality standards commensurate with the safety functions to be performed so as to assure an extremely high probability of accomplishing the safety functions in the event of AOOs, postulated accidents, and natural phenomena, such as earthquakes.

The CRDM materials are discussed in Subsection 4.5.1. The rod position indicator is discussed in Subsection 7.7.1.4.

3.9.4.2.1 CRDM Functional Requirements

The functional requirements of the CRDM are as follows:

- Step length: 0.625 inch per step
- Maximum speed: 72 steps per minute (45 inches per minute)
- Travel length: 165.472 inches (nominal full steps at cold condition)
- Design drive line load: 374.8 pounds
- Trip delay time: Less than or equal to 0.15 seconds

  This is the response time of the latch mechanism (i.e., between when the coil current is cut off and the rod drop begins).

- Design life: 60 years
- Rapid RCCA insertion: Coil current is cut off to initiate dropping the RCCA and the drive rod. The RCCA and the drive rod are inserted by gravity.
- Design temperature for pressure housing and internal parts: 650°F
- Operating temperature for pressure housing and internals parts: 617°F
- Design pressure inside of pressure housing: 2,500 psia
- Operating pressure inside of pressure housing: 2,250 psia

The rod drop time, from starting rod drop at full withdrawal position to reaching 85% insertion stroke into the core, is evaluated by analysis.

Discussion of the reactivity control function of the CRDS is described in Section 4.6 and Section 7.7.1.3.

3.9.4.2.2 Pressure Housing Requirements

The pressure housing consists of a rod travel housing and a latch housing; both are butt welded. The latch housing is butt welded to a penetration nozzle of the RV head. As stated in GDC 14, the butt welded design is known to have an extremely low probability of leakage.

The pressure housing is categorized as a Class 1 component in RG 1.26 (Reference 3.9-52), in that it constitutes a pressure boundary of the reactor primary coolant system. It is designed in accordance with requirements in 10 CFR 50.55a (Reference 3.9-29) and ASME Code, Section III (Reference 3.9-1), Subsection NB.

After the CRDMs are installed on the RV head, hydrostatic testing in accordance with ASME Code, Section III (Reference 3.9-1) is performed to verify the pressure boundary integrity. The material of the CRDM is described in Subsection 4.5.1.

3.9.4.2.3 Internal Component Requirements

The CRDM latch assemblies and the drive rod, (which connects with the RCCA), are classified as internal components.

The latch assembly is non-pressure boundary component and, therefore, not ASME Code, Section III (Reference 3.9-1) limited. Sticking and galling of the latch mechanism are safety-related. The design, fabrication, inspection, and testing of the safety-related latch mechanism comes under the quality assurance requirement regarding safety components in 10 CFR 50.55a (Reference 3.9-29).

The latch mechanism is designed to operate in the temperature range between ambient temperature and plant operating temperature.

The drive rod assembly connects with the RCCA and is driven by the latch mechanisms which are non-pressure boundary components and, therefore, not ASME Code, Section III (Reference 3.9-1) limited. Failure of the drive rod by fracture, thereby, disconnecting the RCCA, leads to RCCA drop, with the resulting decrease in core reactivity, thus, the drive rod is not safety-related.

3.9.4.2.4 Coil Stack Assembly Requirements

The coil stack assembly is installed outside of the latch housing and is comprised of coil housings, an electrical conduit and connector, and three coils, whose design, fabrication, inspection and testing are not governed by the ASME Code, Section III (Reference 3.9-1).

The coil assembly rests on the ledge outside of the latch housing without mechanical connecting devices or welding.

The three coils are required to provide magnetic force to work latch assemblies. If the coils fail, there is then no magnetic force and the RCCA drops into the core, shutting down the reactor. Therefore, failure of the coils is not a related safety issue. Coils are fabricated, in adherence to standard industrial quality assurance standards, and not IEEE, Class 1E standards.

Temperature of the operating coils is maintained below 392°F by forced air cooling.

3.9.4.3 Design Loads, Stress Limits, and Allowable Deformations

The pressure housing is required to comply with ASME Code, Section III (Reference 3.9-1) Subsection NB. The pressure housing is evaluated under the load

combinations prescribed by the code. The loading combination and stress limits are described in Subsection 3.9.3 and shown in Tables 3.9-9 and 3.9-10. This includes seismic loading. The allowable rod travel housing deflection during the seismic event is 1.18 inch, which will still allow the RCCA to be inserted into the core. This is quantified by analysis.

3.9.4.4 CRDS Operability Assurance Program

The functional performance of the CRDMs must be qualified both statically, as RCS pressure boundary components, and dynamically as functional mechanisms. To fulfill these requirements, performance assurance programs are provided.

The structural integrity as a RCS pressure boundary, is confirmed by stress analysis in accordance with ASME Code, Section III (Reference 3.9-1), Subsection NB. Also, a hydrostatic test, at ambient temperature, is performed in accordance with ASME Code, Section III (Reference 3.9-1), Subsection NB.

The capability of the CRDM functions, including withdrawal, insertion, and trip delay are confirmed by both lead unit tests and production unit tests to demonstrate that the design specification requirements are met prior to shipment. The lead unit testing is described as follows:

Lead unit test is performed on the first production unit of the applicable type of CRDM.

- Cold stepping test with full design drive line load and maximum stepping speed (72 steps per minute).

  Criteria: no miss-stepping

- Trip delay time test at cold condition.

  Criteria: less than 0.15 seconds from coil current cut-off to the start of drive rod drop. This delay time can be estimated from the moveable gripper latch opening time during the insertion mode in the stepping test.

- Hot stepping test, with full design drive line load at maximum stepping speed (72 steps per minute).

  Criteria: no miss-stepping

- Trip delay time test at hot condition.

  Criteria: less than 0.15 seconds which is estimated from the moveable gripper latch opening time during the insertion mode in the stepping test.

Production tests are performed on all units before shipment. Test details are as follows:

- Cold stepping test at full design drive line load at maximum stepping speed (72 steps per minute).

  Criteria: no miss-stepping

– Cold trip delay time test at cold condition

  Criteria: less than 0.15 seconds from the coil current cut-off to the start of the rod drop which can be estimated from the moveable gripper latch opening time during the insertion mode in the stepping test.

Preoperational Test

– The scram time, measured at 85% insertion stroke of the RCCA into the fuel assembly, is confirmed to be within specifications prior to initial start up of the plant and prior to start up after every refueling outage. Start up testing is described in Chapter 14.

3.9.5 Reactor Pressure Vessel Internals

This section discusses the US-APWR reactor internals design arrangements; design basis loading for all service conditions; the acceptance criteria of stresses and functional requirements; the computational methods used in the static mechanical and thermal analyses, dynamic analyses, vibration analyses, and computational flow analyses; the testing and alternate methods to confirm computational inputs to the design, the interface load and displacement criteria of the reactor internals and interfacing components; and preservice and inservice inspection plans.

The term “reactor internals” used in this subsection refers to the core support and internal structures and to all structural and mechanical elements inside the RV with the following exceptions:

- Reactor fuel elements and the reactivity control elements out to the coupling interface with the drive unit, except for the structural and interfacing aspects of the reactor fuel assemblies with the reactor internals, which are within the scope of this subsection.
- Control rod drive elements except for the guide tubes, which are within the scope of this subsection.
- In-core and thermocouple instrumentation except for the in-core instrumentation supports and thermocouple support structures which are within the scope of this subsection.

3.9.5.1 Design Arrangements

The reactor internals for the US-APWR can be divided into two major assemblies, the upper reactor internals assembly, and the lower reactor internals assembly. A separate part that is captured between the upper and lower reactor assembly flanges and provides vertical pre-load and frictional restraint to the flanges is the reactor internals hold-down spring.

Figure 3.9-4 illustrates the reactor internals general assembly configuration. The figure illustrates the design arrangement of the reactor internals and the interfacing components such as the RV, fuel assembly, and incore nuclear instrumentation system (ICIS) thimble assembly.

The US-APWR is a four loop PWR plant with 257 fuel assemblies having 17 by 17 fuel rod arrays, with 14 foot active fuel length. The basic design of the US-APWR reactor internals evolved from the existing four loop plant technologies. Figure 3.9-4 shows that the vertical fuel assembly cavity is established by an upper core plate that compresses the fuel assembly hold-down springs and a lower core support plate that supports the fuel assemblies. Also shown is the ICIS thimble assembly and the detector guide thimbles that house the in-core movable detectors.

Figure 3.9-4 shows that the horizontal fuel assembly cavity is formed by the neutron reflector inside surface. The neutron reflector also shields the RV from excessive neutron fluence.

The materials to be used in the construction of the US-APWR reactor internals are discussed in DCD Subsection 4.5.2. The reactor internals are classified as core support structures, threaded structural fasteners, and internal structures. Although there are many reactor internals parts, there are only a few classified components designed as core support structures and threaded structural fasteners. The core support structures and threaded structural fasteners classified components are summarized below:

Core support structures and threaded structural fasteners:

- Upper Core Support Assembly
  - Upper core support plate, flange, and skirt cylinder
  - Upper core plate
  - Upper core plate fuel alignment pins
  - Upper support columns, and threaded structural fasteners
  - Upper core plate clevis and threaded structural fasteners
- Lower Core Support Assembly
  - Core barrel flange
  - Upper and lower core barrel
  - Lower core support plate
  - Radial support key and clevis
  - Lower core support plate fuel alignment pins

The material of construction is mainly austenitic 304 stainless steel, which is selected for its resistance to corrosion from PWR water chemistry and its manufacturability (i.e., ease of welding and machining). The weld metal is 308 stainless steel. Strain hardened 316 stainless steel is the material of choice for the threaded structural fasteners because of its additional increased strength necessary for maintaining preload in a vibratory environment. Other materials such as Alloy X-750 used as an alternative for the guide tube support pins and nuts, and 403 stainless steel for the hold-down spring are selected for higher strength applications. Special materials such as a cobalt alloy hard-facing are applied to reduce material wear from vibration effects. All materials other than the cobalt alloy are controlled to a cobalt content not to exceed 0.2%.

3.9.5.1.1 Upper Reactor Internals Assembly Design Arrangement

Figure 3.9-5 shows the upper reactor internals assembly design arrangement. The major sub-assemblies of the upper reactor internals are the upper core support assembly, upper core plate assembly, upper support column assemblies, top slotted columns and mixing devices, guide tube assemblies, RV level instrumentation system assemblies, ICIS detector guide thimbles and thimble assemblies, and thermocouple conduit support column assemblies.

The upper core support assembly has an upper core support flange welded to the top of a cylindrical skirt. The upper core support flange has flow holes to allow cooling flow to enter into the RV head plenum. There are also slots in the flange that allow for guidance of the upper core support assembly during installation. These slots are engaged and guided by head and vessel alignment pins that are attached to the core barrel flange. Also, there are threaded roto-lock inserts in the upper core support flange for lifting of the upper support assembly. The cylindrical skirt is also welded at its bottom to the upper core support plate. There are holes in the upper support plate to allow installation of the lower guide tubes, and upper support columns. Each guide tube assembly is secured to the upper core support plate by hold-down bolts and each upper support column with a large nut.

For loads in the upward vertical direction, the upper core support assembly is vertically restrained by the RV head flange, and in the downward direction by a reactor internals hold-down spring. The preload in the hold-down spring during installation is controlled by a fixed distance between the bottom of the upper core support flange and the top of the core barrel flange. Vertical loads on the upper core support assembly come from dead weights less buoyant forces, upper core support and upper core plate differential pressure loads, vibration loads on the components, fuel assembly spring and lift loads, and seismic and postulated LOCA loads. The upward vertical loads are transmitted from the upper core support flange to the RV head and the downward vertical loads to the RV flange. There is a designed radial gap between the upper core support flange and the RV inside diameter. The gap is large enough to prevent contact from thermal expansion of the upper core support flange relative to the RV flange during operation. Horizontal loadings from flow loads, vibration loads, and seismic and pipe-rupture loads are transmitted from the upper core support flange to the RV head and hold-down spring by friction or direct contact with the RV flange. Head and vessel alignment pins also transmit some of the horizontal loads to the RV head and RV flanges.

The vertical cavity between the upper core support and the upper core plate is dimensionally controlled by upper support columns that are fastened to the upper core plate at the bottom of the column and to the top of the upper core support by a single extended tube with a threaded nut that bears on the upper core support. Some upper support columns have either the detector guide thimbles or thermal couple conduits. In addition, there are several top slotted columns, and mixing devices on the periphery of the upper core plate. These columns are designed to provide a more uniform exit flow and temperature distribution to the outlet loop pipes. There are also two RV level instrumentation support tubes to measure the water level in the reactor vessel.

The upper core plate has circular flow holes for fuel assembly exit core flow. There are also circular flow holes for the exit core flow below the upper support columns and there are rectangular shaped holes for core exit flow into the guide tubes. Exit flow core

pressure difference between the fuel assemblies is limited by the design to an acceptable cross-flow velocity to prevent vibratory damage to the fuel rods, thimbles, or RCCAs. The upper core plate has two fuel assembly pins for each fuel assembly that are shrink-fitted and provide guidance for the fuel assembly nozzles during refueling and installation. The fuel assembly pins also provide some horizontal restraint to the fuel assembly top nozzle. The upper core plate horizontal position, relative to the fuel assemblies, is controlled by a tight fit between the upper core plate clevis and the upper core plate guide pins. The upper core plate clevis and the upper core plate guide pins transmit horizontal loads during normal operation and during seismic and pipe rupture events. However, the upper core plate guide pins are limited in their load capacity, so that loads exceeding the capacity of the pins are transmitted by contact of the upper core plate rim with the core barrel inside diameter.

The guide tubes provide horizontal restraint and guidance to the control rods and drive rod assembly, as well as allow the parking of the drive rod during removal and installation after refueling. All guide tubes are designed for removal and replacement in the event they sustain damage during operation or refueling. The guide tubes have two main assemblies; an upper guide tube and a lower guide tube. The upper and lower guide tube flanges are fastened together by bolts threaded to the top of the upper core support plate. The lower guide tube is inserted through holes in the upper core support and restrained in the horizontal direction by a small clearance between the lower guide tube flange and upper core support plate hole. The bottom of the lower guide tube is fastened by two large support pins with flexible leaves that slide vertically with a small amount of friction force, but are horizontally preloaded against the upper core plate holes to prevent excessive vibration and wear. The upper and lower guide tubes have plates that guide the control rod spider during insertion and retraction of the RCCA. The lower guide tube has a continuous section of C-tubes and sheaths just above the upper core plate hole that avoids excessive vibrations of the RCCA due to the flow from fuel assemblies. The lower guide tube has “windows” to allow the flow to egress to the plenum between the upper core support and upper core plate.

3.9.5.1.2 Lower Reactor Internals Assembly Design Arrangement

Figure 3.9-6 shows the lower reactor internals assembly design arrangement. The major sub-assemblies of the lower reactor internals assembly are the core barrel assembly; the lower core support assembly; the neutron reflector assembly; irradiation specimen guide assembly; and the secondary core support assembly.

The core barrel assembly consists of a forged flange that is welded to the upper core barrel. The upper core barrel is welded to the lower core barrel. The core barrel flange has flow nozzles that are welded to the flange and provides a cooling flow from the RV annulus to the RV head plenum. Lifting of the core barrel assembly is accomplished by threading the lifting fixtures into the roto-lock inserts in the flange. The head and vessel alignment pins are bolted to the flange to provide guidance for the core barrel assembly during installation and removal. The head and vessel alignment pins are guided and aligned by slots in the RV and RV head. The flange has holes for access to the irradiation specimens. The upper core barrel has four welded core barrel outlet nozzles to provide an exit flow path to the RV outlet nozzles. In addition, four safety injection pads are attached to the core barrel to divert the safety injection flow from directly impinging on the barrel during a safety injection event. The lower core barrel receives the most neutron fluence from the core during normal operation. The lower core barrel

has irradiation specimen guides that are fastened to the outside of the core barrel at specific locations.

The lower core support assembly consists of a lower core support plate, six radial support keys, and fuel alignment pins. The lower core support plate is welded to the lower core barrel. The lower core support plate has orificed flow holes to reduce mal-distribution of the flow into the core. Six radial keys are attached to the outside rim of the lower core support plate. These keys engage the RV clevis inserts. The keys and clevis inserts provide alignment during installation, resistance to vibration from flow, and transmit asymmetric flow loads and dynamic loads from seismic and postulated LOCA forces to the reactor vessel. The lower core support plate supports the fuel assemblies and has two fuel alignment pins per fuel assembly for alignment and horizontal restraint of the bottom fuel nozzle. The fuel alignment pins are attached to the top of the lower core support plate and restrained by a locking device.

The neutron reflector assembly offers a significant reduction in the number of threaded fasteners, and an improvement in neutron reflectivity, from the design of currently operating PWR plants. The neutron reflector consists of multiple stacked ring blocks that are supported in the vertical downward direction by the lower core support plate and by tie rods and neutron reflector mounting bolts in the vertically upward direction. The inside surface of the ring blocks establishes the core cavity profile for the fuel assemblies. The small gaps between ring blocks are designed to be aligned with the fuel assembly grids. The stacked ring blocks are connected to each other by ring block alignment pins mounted on their top and bottom surfaces for alignment and shear restraint. The neutron reflector upper alignment pin and lower alignment pins are guided into position by clevises attached to the core barrel. This arrangement provides horizontal restraint for mechanical loads, similar to the upper core plate arrangement. The ring blocks are carefully designed with cooling holes to assure that void swelling and distortion are minimized. Bypass cooling flow is directed into the bottom ring block from holes machined in the lower core support plate. The holes in the lower core support plate are also orificed to provide a pressure drop that minimizes the pressure difference between the core and the neutron reflector flow paths. The holes are also sized to prevent debris from entering or blocking the cooling holes in the ring blocks. Tie-rods provide vertical restraint for mechanical loads while the neutron reflector mounting bolts secure the bottom ring block to the lower core support plate. The tie-rods are captured by a nut bearing on the top ring block. The tie-rods pass through holes in the blocks and are threaded into the lower core support plate. Fluence and temperature limits are also imposed on the tie-rods to preclude excessive loss of pre-load from irradiation relaxation.

The irradiation specimen guides are fastened to the core barrel by long socket head cap screws (to accommodate bending). The specimen capsules inside the specimen guides are held in place by springs and a threaded cap. RV surveillance test specimens are periodically removed during outage for examination of RV neutron fluence embrittlement.

The secondary core support assembly consists of secondary core support columns, diffuser plate support columns, a base plate, and energy absorber system. The diffuser plates are bolted to the diffuser plate support columns and those columns are fastened to the bottom of the lower core support plate. The energy absorber and base plate are supported by columns that are bolted to the bottom of the lower core support plate. The energy absorber system and base plate have traditionally been used in PWR internals.

Their purpose is to preclude overstressing the RV in the unlikely event of a failed core barrel weld. The drop distance between the bottom of the base plate and the energy absorber system RV bottom is carefully controlled to minimize the impact load and stresses on the RV bottom head.

3.9.5.1.3 Jurisdictional Boundaries of the Reactor Internals

The jurisdictional boundaries between the core support structures, the internal structure, and the interfacing components such as the RV, CRDMs, fuel assemblies and thermocouple, and ICIS follow the guidance for boundaries of jurisdiction in the ASME Code, Section III (Reference 3.9-1), Subsection NG-1000. Figure 3.9-7 illustrates the boundaries of jurisdiction by the heavy black line between reactor internals and interfacing components.

The jurisdictional boundaries between the core support structures, threaded structural fasteners with the internal structures, and interfacing structures are summarized below:

- Core support structures and threaded structural fasteners boundary with the RV
  - Core barrel and upper core support flanges with the RV and RV head flanges.
  - The radial support key and clevis with the RV
- Core support structures and threaded structural fasteners boundary with the fuel assemblies
  - Bottom of the upper core plate with the fuel assembly
  - Top of the lower core support plate with the fuel assembly
  - Upper core plate fuel assembly alignment pins with the fuel assembly top nozzle holes
  - Lower core support plate fuel assembly alignment pins with the fuel assembly bottom nozzle holes
- Core support structures and threaded structural fasteners boundary with the ICIS
  - Upper core support column inside hole with the ICIS thimble
  - Upper core support with the in-core and thermocouple thimbles and conduit supports
- Core support structures and threaded structural fasteners boundary with the internal structures
  - Upper core support plate and threads with the lower guide tube flange and bolts
  - Upper core support flange and core barrel flange with the reactor internals hold-down spring
  - Core barrel flange with head and vessel alignment pins
  - Core barrel flange with flow nozzles

  - Lower core support plate with secondary core support columns and bolts
  - Core barrel threads and irradiation specimen guide holder bolts
  - Lower core support plate threads with the neutron reflector tie-rods
  - Core barrel alignment pins with the neutron reflector clevis and bolts

- Internal structure boundary with the interface components
  - Core barrel outlet nozzle with RV outlet nozzle
  - Detector guide thimble with the in-core support housing plates
  - Thermocouple conduits with the thermocouple supports
  - Upper guide tube plates, lower guide tube guide plates, continuous section sheaths and C-tubes with the RCCA rodlets
  - Upper guide tube top plate hole with the drive rod
  - Parking button on the lower guide tube sheaths with the drive rod button for refueling
  - Secondary core support base plate with the RV bottom head

3.9.5.2 Loading Conditions

The US-APWR reactor internals loading conditions, load combinations, and acceptance criteria, namely, the reactor internals design and service limits, and displacement limits are discussed below.

The loading conditions that are taken into account in designing the US-APWR reactor internals structures listed in Table 3.9-11 are summarized as follows:

- Pressure differences due to coolant flow
- Weight of the reactor internals
- Superimposed loads such as those due to other structures such as the reactor core (fuel assemblies), control rod assemblies; and ICIS and thermocouple instrumentation supports
- Earthquake loads or other loads which result from motion of the RV
- Reactions from restraints, supports, or both
- Thermal loads from reactor coolant flow, thermal transients, irradiation gamma heating, and differential thermal expansion
- Loads resulting from the impingement of flow or reactor coolant, or other contained or surrounding fluids
- Transient pressure difference loads, such as those which result from rupture of a branch pipe
- Vibratory loads from flow induced vibration, and pump induced vibration

- Handling loads experienced in preparation for or during refueling or inservice inspection

3.9.5.2.1 Loading Combinations

All combinations of design and service loadings (e.g., operating differential pressure and thermal effects, potential adverse flow effects (flow-induced vibrations and acoustic resonances), seismic loads, and transient pressure loads of postulated LOCA) are accounted for in the design of the reactor internals. The distribution of the design and service loadings acting on the reactor internals components and structures are described below. Table 3.9-11 summarizes the loading combinations for the reactor internals. As an example of a loading combination for a loading condition, for the Level A loading condition, the loads to be combined are those loads marked with an X in the Level A column, unless otherwise indicated.

3.9.5.2.2 Design and Service Limits

The reactor internals loads are categorized according to the design and service loading conditions for the plant. Table 3.9-11 and Table 3.9-12 list the ASME Code, Section III (Reference 3.9-1) load combinations and service limits for core support structures and threaded structural fasteners, respectively.

Internal structure service limits are not addressed in the ASME Code, Section III (Reference 3.9-1). However, because of their importance to the safe operation of the reactor internals, the stress limits for core support structures are applied. However, if the stress limits for the internal structure do not meet the ASME Code, Section III (Reference 3.9-1) limits for the core support structures, then alternate acceptance criteria are employed based on validation by testing, sound engineering judgment, and experience with similar designs.

3.9.5.2.3 Interface Load and Displacement Limits

There are certain load and displacement limits for the reactor internals that affect the safety and operability of the interface components. These limits are summarized in Table 3.9-2.

3.9.5.3 Design Bases

The rules for materials, design, fabrication, examination, and preparation of reports for the manufacture and installation of the US-APWR core support structures and internal structure follow those in Section III, Subsection NG of the ASME Boiler and Pressure and Vessel Code 2001 Edition up to and including 2003 Addenda (Reference 3.9-1).

Additional codes, standards, regulations, and guidelines from the NRC and the Utility Requirements Document are adhered to and are listed in the Owners design specification.

The design basis for the operability of the US-APWR internals are listed below and discussed in detail under the following sections:

- Safety analysis

- Thermal-hydraulic performance
- Core loading pattern
- Environmental conditions including irradiation
- RCS transients
- Interface design requirements

3.9.5.3.1 Safety Analysis Design Basis

The safety analysis design requirements and limits for the US-APWR internals are as follows:

- Mal-distribution of flow to the core should be limited so as not impact core safety limits in Chapter 15.
- RCCA drop times or insertion during normal service conditions should not be adversely affected.
- RCCA are to be inserted without impediment after an unanticipated accident, or a seismic and postulated LOCA event.
- There should be no impediment of the reactor internals to the emergency core cooling flow after a seismic and postulated LOCA event.
- The impact load on the RV bottom head from a postulated core drop event should not adversely affect the integrity of the RV bottom head.
- The reactor internals are to provide fast neutron fluence protection to the RV to preclude excessive embrittlement.
- The water volume is to be monitored at all times.

3.9.5.3.2 Thermal-Hydraulics Design Basis

The reactor internals are to be designed for the following thermal-hydraulic performance parameters:

- The flow conditions are as follows:
  - Thermal design flow
  - Best estimate flow
  - Mechanical design flow
  - Hot pump overspeed
  - Hot functional testing
- Pressure drops across the reactor internals are to meet system requirements for all Level A and B service flow conditions.
- Bypass flow is to be minimized and must not exceed system requirements for normal operation.

- Distribution of main coolant inlet flow into the fuel assemblies during normal operation must meet fuel assembly core inlet requirements.
- Core outlet flows from the fuel assemblies are to be designed to minimize horizontal velocities that may contribute to vibration of the RCCA rodlets.
- Main coolant flow into the outlet piping during normal operation is to meet system requirements, specifically (1) to minimize exit fluid temperature striations, and (2) meet the velocity criteria to prevent erosion.
- Bulk temperature of the main coolant flow is not to exceed pressurized water saturation temperature.
- Fluid temperature increase in the bypass flow may be credited to the reactor power output.

A discussion of the reactor coolant flow path is described below.

The reactor coolant flow path for the reactor internals is depicted in Figure 3.9-8. Primary coolant flow at T_{cold} enters into the downcomer, the annular space between the RV inside wall, and the core barrel outside surface. The main coolant flow then enters the bottom of the RV and turns upward, flowing past the diffuser plates and distributing into the lower core support plate orificed holes. The orifices are carefully designed to control the flow into the fuel assemblies and to minimize uneven flow distributions and hot spots. The coolant is heated in each fuel assembly to a fluid temperature depending on its core location in the core loading pattern. The hot assembly flow exits the fuel assemblies and enters the holes in the upper core plate. No fuel assembly exit temperature exceeds the water saturation temperature. This is to preclude bulk-boiling in the main coolant flow. The upper core plate has two types of flow holes. One type is circular in shape and the other type is rectangular in shape. The circular shape is for open exit flow or exit flow below the upper support columns. The rectangular shape is for exit flow below the guide tubes. Most the main flow that enters the guide tube exits through “windows” into the upper plenum cavity. Some of the flow exits through a controlled gap between the bottom of the guide tube flange and the top of the upper core plate. The guide tubes and support columns are carefully configured to minimize the pressure drop and cross-flow from the core exit fluid.

The main coolant flow then mixes in the upper plenum and exits from the core barrel outlet nozzles at an average fluid temperature of T_{hot}. Special flow columns are spaced on the periphery of the upper core plate near the core barrel outlet nozzles in order to improve mixing and minimize outlet fluid temperature mal-distribution.

Some percentage of the main coolant flow is bypass flow. The bypass flow is either for cooling metal or leakage between gaps. The bypass flows for cooling metal are as follows:

- Neutron reflector blocks and tie rods
- RV head

The bypass flows from gap leakages are as follows:

- Small gap between the core barrel outlet nozzle and RV outlet nozzle

- Gap between the neutron reflector ring block inside surface and the peripheral fuel assembly grids and nozzles
- Neutron reflector small gaps between the ring blocks

3.9.5.3.3 Core Loading Pattern and Axial Power Distribution Design Basis

The core loading pattern and the axial power distribution have a design impact on the reactor internals gamma heating, fluid temperatures, metal temperatures, and neutron fluence. The reactor internals that are affected by the core loading pattern and fluence are as follows:

- Core barrel
- Upper core plate
- Lower core support plate
- Neutron reflector ring blocks
- Neutron reflector ring block alignment pins
- Neutron reflector tie rods and mounting bolts
- Irradiation specimen guide and bolts

3.9.5.3.4 Environmental Conditions Design Basis

The environmental conditions that are addressed in the design of the reactor internals are from the following two sources:

- Water chemistry
- Fast neutron irradiation

The environmental effects of water chemistry on reactor internals materials are as follows:

- Corrosion
- Stress corrosion cracking
- Fatigue strength reduction

The fast neutron irradiation environmental effects on reactor internal materials are:

- Irradiated assisted stress corrosion cracking
- Irradiation stress relaxation
- Irradiation embrittlement
- Gamma heating
- Radiation exposure of the RV

- Void swelling

The environmental effects of corrosion and stress corrosion cracking of austenitic stainless steel materials in the reactor internals are generally not a concern based on experimental and operational experiences. Also fatigue strength degradation due to water chemistry conditions has likewise not been observed.

The fast neutron effects resulting from irradiated assisted stress corrosion cracking has been shown to occur on former bolts of the baffle which attach in core region of reactor internals. However, the US-APWR uses a neutron reflector instead of the former baffle structure thus eliminating high stress bolts. Therefore, the potential of irradiated assisted stress corrosion cracking is very low.

Another environmental effect from fast neutron exposure on reactor internals is irradiation stress relaxation. The US-APWR neutron reflector is fastened axially by tie rods of strain hardened 316 stainless steel.

Irradiation embrittlement can cause a decrease in ductility and an increase in yield and ultimate strength over the design life of the plant. The amount of irradiation embrittlement is highly dependent on the fluence, metal temperature, and stress condition. For the materials selected for reactor internals, the reduction in ductility and the increase in yield and ultimate strength as well as the fatigue strength has not been shown to be an issue for the operating conditions of the US-APWR plant.

Gamma heating from fast neutron irradiation is accounted for in the design of the reactor internals.

The RV is subjected to fast neutron exposure. Protection from excessive fluence comes from (1) the water in the annulus between the core barrel outside diameter and the inside of the RV, and (2) the neutron reflector.

Void swelling from irradiation is a concern for materials with high dose rates. The neutron reflector ring blocks are subjected to high fluence dose rates and the ring blocks are cooled by flow inside cooling holes to minimize void swelling. This environmental issue is addressed for the US-APWR.

3.9.5.3.5 RCS Transient Design Basis

The RCS transient design basis is discussed in Subsection 3.9.1.1.

3.9.5.3.6 Reactor Internals Vibration Design Basis

The reactor internals vibration loads come from a dynamic computer model that inputs the pressure difference across components and the pump rotating speed and pump-induced vibration effects. The mechanical loads and displacements from the vibration analysis are used as input to the structural analysis of the reactor internals.

3.9.5.3.7 Seismic Design Basis

The seismic analysis methodology is based on static and dynamic mathematical models and uses general purpose FE computer code. Refer to Subsection 3.9.2.5 for further discussion on the seismic design basis.

3.9.5.3.8 LOCA Design Basis

The LOCA design basis input is discussed in Subsection 3.9.2.5.

3.9.5.3.9 Interface Components Design Basis

The interface components design basis are those design parameters and design requirements that affect the design of the core support and internal structures. The parameters and requirements for interface components such as the reactor vessel, fuel assemblies, CRDM, and RCCA drive line system, thermocouple instrumentation, and ICIS are included in the design specification.

3.9.5.3.10 Reactor Internals Computational Methods and Verification of Input

Computational methods (e.g., the FE method) are used to determine stresses and displacements in the reactor internal components. Validation of the modeling includes the comparison of results with similar designs or testing for the natural frequencies, mode shapes, and frequency response functions with experimental or plant results.

3.9.5.3.11 Mechanical Design Criteria for the Reactor Internals

The mechanical design criteria for the reactor internals is included in the design specification.

3.9.5.3.12 PSI and ISI Plans

The PSI and ISI plans for the reactor internals is discussed below.

3.9.5.3.12.1 PSI Plan

The PSI plan follows the rules of ASME Code, Section XI (Reference 3.9-43). Visual inspection of parts subject to wear and galling are examined before and after hot functional testing. In addition, critical welds are also examined for any evidence of cracks.

3.9.5.3.12.2 ISI Plan

The ISI plan follows the rules of ASME Code, Section XI (Reference 3.9-43).

3.9.6 Functional Design, Qualification, and Inservice Testing Programs for Pumps, Valves, and Dynamic Restraints

ASME Code, Section III, Class 1, 2 and 3 safety-related pumps, valves and dynamic restraints that are required to perform a specific function in shutting down the reactor to a safe-shutdown condition, in maintaining the safe-shutdown condition, or in mitigating the consequence of an accident, are subjected to IST to assess and verify operational

readiness as set forth in 10 CFR 50.55a(f) (Reference 3.9-29) and ASME OM Code (Reference 3.9-13).

The pumps covered in the IST Program are those pumps that are provided with an emergency power source and required to perform a specific function in shutting down a reactor to a safe-shutdown condition, in maintaining the safe-shutdown condition, or in mitigating the consequence of an accident.

The US-APWR utilizes ASME OM Code (Reference 3.9-13) for developing the IST Program for ASME Code, Section III, Class 1, 2 and 3 safety-related pumps, valves and dynamic restraints. The COL Applicant is to administratively control the edition and addenda to be used for the IST program plan for pumps, valves, and dynamic restraints.

3.9.6.1 Functional Design and Qualification of Pumps, Valves, and Dynamic Restraints

The requirement for ISI for ASME Code, Section III, Class 1, 2 and 3, safety-related pumps, valves and dynamic restraints IST assesses and verifies operational readiness included in various sections of the ASME OM Code as follow:

- Requirements for IST of pumps are incorporated in ISTB.
- Requirements for IST of valves are incorporated in ISTC.
- Requirements for IST of Motor-Operated Valve (MOV) are incorporated in ISTC 4.2.
- Requirements for IST of pressure relief valves are incorporated in Appendix I.
- Requirements for IST of dynamic restraints are incorporated in ISTD.

The various provisions for testing pumps, valves, and dynamic restraints are incorporated into the design of the US-APWR. These provisions and requirements are discussed in the respective sections of this DCD where the specific system is described.

It should be noted that the requirements of system pressure test per ASME Code, Section XI, Section IWA 5000 (Reference 3.9-43) that verify the system pressure boundary integrity are part of the ISI Program and are not part of this IST Program.

As required by the 10 CFR 50.55a(f) (Reference 3.9-29), ASME Code, Section III, Class 1, 2 and 3 safety-related pumps, valves and dynamic restraints are incorporated in 120-month interval IST Program Plan that is in compliance with the requirements of the latest edition and addenda of the OM Code, 12 months before the date of issuance of the operating license and, in compliance with Plant, Technical Specification and this DCD.

The IST Program Plan is also used for the required preservice (base line) testing of ASME Code, Section III, Class 1, 2, and 3 safety-related pumps, valves and dynamic restraints.

Relief requests from any of the applicable ASME OM Code test requirements are documented in the IST Program Plan, including justification and proposed alternative of

test(s)/examination(s) that assess operation readiness of the impacted pumps, valves, or dynamic restraints.

3.9.6.2 IST Program for Pumps

IST of pumps is to determine the operational readiness of the pumps. The IST of pumps is performed at the required frequency as stated in the IST Program Plan. Test results are compared to the established and accepted preservice reference values, including the use of instrument range and accuracy. Table 3.9-13 provides a detailed listing of safety-related pumps in the IST Program Plan along with the specific parameters (flow, differential pressure, inlet pressure, vibration, speed) and test frequency. The IST Program Plan for US-APWR does not include any non safety-related pumps since these pumps do not perform safety-related functions.

Relief from the requirements for testing, if required, and the alternative to the tests are justified and documented in Table 3.9-13.

The COL Applicant is to provide the site-specific, safety-related pump IST parameters and frequency.

3.9.6.3 IST Program for Valves

Safety-related valves and other selected valves are subject to operational readiness testing. IST of valves assesses operational readiness including actuating and position indicating systems. The valves that are subject to IST include those valves that perform a specific function in shutting down the reactor to a safe-shutdown condition, in maintaining a safe-shutdown condition, or in mitigating the consequences of an accident. Safe-shutdown conditions are discussed in Subsection 7.4.1. In addition, pressure relief devices used for protecting systems or portions of systems that perform a function in shutting down the reactor to a safe-shutdown condition, in maintaining a safe-shutdown condition, or in mitigating the consequences of an accident, are subject to IST.

Valves (including relief valves) subject to IST in accordance with the ASME Code are indicated in Table 3.9-14. This table includes the type of testing to be performed and the frequency at which the testing should be performed. The test program conforms to the requirements of ASME OM, subsection ISTC, to the extent practical. The guidance in NRC Generic Letters, and industry and utility guidelines (including NRC Generic Letters 89-04 and 96-05, Reference 3.9-53 and 3.9-54) is also considered in developing the test program. Inservice testing incorporates the use of non-intrusive techniques to periodically assess degradation and performance of selected valves (e.g., MOVs).

Safety-related check valves with an active function are exercised in response to flow. Safety-related POVs with an active function are subject to an exercise test and an operability test. The operability test may be either a static or a dynamic (flow and differential pressure) test.

Relief from the requirements for testing, if needed, and the alternative to the tests are justified and documented in Table 3.9-14.

The COL Applicant is to provide type of testing and frequency of site-specific valves subject to IST in accordance with the ASME Code.

Valve Functions Tested

The IST Program Plan identifies the specific safety-related valve function(s). The identified safety valve function listed in Table 3.9-14, is a single or a combination of safety functions of the following:

- Maintained in closed position (passive valve)
- Maintained in open position (passive valve)
- Change to safety closed position (active valve)
- Change to safety open position (active valve)
- Change to safety throttle flow position (active valve)

Based on the safety-related functions identified for each valve, the IST is to assess the operability readiness of the valve to perform its intended safety function. Active valves include valves that change position to open, change position to closed and/or have a throttling function. Active valves, which are required to change position to perform their safety function as defined in the ASME OM Code, include valves that change obturator (the part of the valve that blocks the flow stream) position to accomplish a safety-related function(s). Valve function to maintain closed position is designated as passive valve, however, it is required to be included in the IST Program Plan and functionally tested in accordance with the ASME OM Code requirements.

If upon removal of the actuation power (electrical power, air or fluid for actuation) an active valve fails to the position associated with performing its safety-related function, it is identified as “active-to-fail” in Table 3.9-14.

Valve categories are used in determining the type of IST in accordance with the ASME OM Code. These valves function to include but are not limited to:

- Active or active-to-fail for fulfillment of the safety-related function(s)
- RCS pressure boundary isolation function
- Containment isolation function
- Seat leakage (in the closed position), is limited to a specific maximum amount when important for fulfillment of the safety-related function(s)
- Actuators that fail to a specific position (open/closed) upon loss of actuating power for fulfillment of the safety-related function(s)
- Safety-related remote position indication

The ASME IST categories are assigned based on the safety-related valve functions and the valve characteristics. The following criteria are used in assigning the valves IST categories in accordance with the ASME OM Code.

- Category A – safety-related valves with safety-related seat leakage requirements
- Category B – safety-related valves requiring IST, but without safety-related seat leakage requirements

- Category C – safety-related, self-actuated valves (such as check valves and pressure relief valves)
- Category D – safety-related, explosively actuated valves and non-reclosing pressure relief devices

Additionally, valves that are included in the IST Program that have position indication are observed locally during valve exercising to verify proper operation of the position indication. The frequency for this position indication test is in accordance with ASME OM Code. Where local observation is not practicable (such as solenoid valves), other methods are used for verification of valve position indicator operation. The COL Applicant is to provide alternate method of valve position indicator operation and justification for valves in the IST program plan.

3.9.6.3.1 IST Program for MOVs

Safety-related ASME Code, Section III, Class 1, 2 and 3 MOVs are inservice tested for operability to the requirements identified in the ASME OM Code. In some cases, the valves are tested on a less frequent basis because it is not practicable to exercise the valve during plant operation. If an exception is taken to performing ASME Code test frequency such as full-stroke exercise testing of a valve, then full-stroke testing is performed during cold shutdown condition on a frequency that is not more often than required by the OM Code. If testing is not practicable during plant shutdown condition, then the full-stroke testing is performed during refueling outage.

In addition to the above, MOVs are inservice tested in accordance with the requirements of GL-89-10 (Reference 3.9.55) to permit periodic assessment of valve operability at the prescribed frequency. This MOV program addresses the various requirements, such as, maximum torque and thrust, margins for degraded conditions, degraded voltage, control switch repeatability, load sensitive MOV behavior, etc.

The inservice operability testing of some MOVs rely on non-intrusive diagnostic techniques to permit periodic assessment of valve operability at design basis conditions in accordance with GL-89-10. The COL Applicant is to identify MOVs that require non-intrusive diagnostic testing technique. The specified frequency for operability of non-intrusive diagnostic techniques, testing is a maximum of once every 10 years. The initial test frequency is the longest of every three refueling cycles or five years until sufficient data exists to determine a longer test frequency is appropriate, in accordance with GL 96-05 (Reference 3.9-54).

3.9.6.3.2 IST Program for POVs Other Than MOVs

ASME Code, Section III, Class 1, 2 and 3 safety-related POVs (air operated, hydraulic operated, solenoid operated) are subject to operational readiness testing in accordance with the requirements stated in the ASME OM Code. IST of valves assesses operational readiness including actuating, stroke timing, fail safe, and verification of position indicating systems.

In some cases, the valves are tested on a less frequent basis because it is not practicable to exercise the valve during plant operation. If an exception is taken to performing ASME Code test frequency such as full-stroke exercise testing of a valve,

then full-stroke testing is performed during cold shutdown conditions on a frequency that is not more often than required by the OM Code. If testing is not practicable during plant shutdown conditions, then the full-stroke testing is performed during refueling outage.

The IST requirement for measuring stroke time for valves are completed in conjunction with a valve exercise IST. An acceptable valve stroke time and fail safe testing normally verify the operability of the valve's solenoid(s).

3.9.6.3.3 IST Program for Check Valves

Safety-related check valves identified with specific safety-related functions to open and/or to close are tested periodically. Exercising a check valve confirms the valve capability to move to the position(s) to fulfill the safety-related function(s). The exercise test shows that the check valve opens in response to flow and closes on cessation of flow. Required design flow is provided to fully open the check valve. Either permanently or temporarily installed non-intrusive check valve indication is used for this test.

Valves that normally operate at a frequency that satisfies the exercising requirement need not be additionally exercised, provided that the observations required of IST are made and recorded at intervals no greater than that specified in this section.

The ASME Code specifies a quarterly check valve exercise frequency. In some cases, check valves are tested on a less frequent basis because it is not practical to exercise the valve during plant operation. If an exception is taken to performing quarterly exercise testing, then exercise testing is performed during cold shutdown on a frequency not more often than quarterly. If this is not practical, the exercise testing is performed during each refueling outage. If exercise testing during a refueling outage is not practical, then an alternative means is provided. Alternative means include non-intrusive diagnostic techniques or valve disassembly and inspection. Non-intrusive methods may include monitoring an upstream pressure indicator, monitoring tank level, performing a leak test, a system hydrostatic, or pressure test, or radiography.

Check Valve Disassembly and Inspection

The IST program plan identifies which valves require periodic valve disassembly and inspection, and the frequency of inspection is documented in Table 3.9-14.

3.9.6.3.4 Pressure Isolation Valve Leak Testing

Safety-related valves with seat leakage limits are tested to verify their seat leakage. These valves include RCS Isolation Valves - valves that provide isolation of piping that interface with the RCS and other safety systems.

The ASME Code, Section XI (Reference 3.9-43) specifies a test frequency of at least once every two years. The ASME Code, Section XI does not require additional leak testing for valves that demonstrate operability during the course of plant operation. In such cases, the acceptability of the valve performance is recorded during plant operation to satisfy IST requirements. Therefore, a specific IST need not be performed on valves that meet this criterion.

The maximum leakage requirement for pressure isolation valves (PIVs) that provide isolation between high and low pressure systems is included in the surveillance requirements for Technical Specification 3.4.14. The PIVs that require leakage testing are tabulated in Table 3.9-14.

3.9.6.3.5 Containment Isolation Valve Leak Testing

Containment isolation valves that provide isolation for piping systems that penetrate the containment are tested in accordance with 10 CFR 50, Appendix J (Reference 3.9-56). Depending on the function and configuration, some valves are tested during the integrated leak rate testing (Type A), test individually as a part of the 10 CFR 50, Appendix J, Type C testing, or both. The leak rate test frequency for a containment isolation valve is defined in Subsection 6.2.4. The provisions in 10 CFR 50.55a(b)2 (Reference 3.9-29) requires leakage limits and corrective actions for individual containment isolation valves where corrective actions are required by reference to ASME OM Code (Reference 3.9-13). The IST program plan as defined in Subsection 3.9.6.3, identifies scope, exceptions and changes in accordance with 10 CFR 50, Appendix J (Reference 3.9-56).

3.9.6.3.6 IST Program for Safety and Relief Valves

Pressure relief devices that provide a safety-related function in shutting down the reactor, in mitigating the consequence of an accident, and/or in protecting equipment in systems that perform a safety-related function, are specified in accordance with ASME OM Code for IST. The ISTs for these valves are identified ASME OM Code, Appendix I.

The periodic IST includes visual inspection, seat tightness determination, set pressure determination, and operational determination of balancing devices, alarms, and position indication as appropriate. The frequency for this IST is every five years for ASME Code, Section III, Class 1 (Reference 3.9-1) and main steam line safety valve, or every 10 years for ASME Code, Section III, Classes 2 and 3 devices. Non-reclosing pressure relief devices, if existing, are inspected when installed and replaced every five years unless historical data indicate a requirement for more frequent replacements.

3.9.6.3.7 IST Program for Manually Operated Valves

Safety-related active manually operated valves are identified in the IST Program Plan, and exercised periodically in accordance with frequency and requirements specified in the ASME OM Code.

3.9.6.3.8 IST Program for Explosively Activated Valves

Not applicable to US-APWR design.

3.9.6.4 IST Program for Dynamic Restraints

Snubber operability inspections and tests including scope and frequency requirements are specified and controlled in the Components Support Inspection and Testing Program Plan. The ASME OM Code, 1995 Edition through the 2003 Addenda (Reference 3.9-13) provides ISI methods and requirements for examinations and tests of snubbers at nuclear power plants. Preservice and inservice examinations must be performed using

the VT-3 visual examination method described in IWA-2213 of the ASME Code, Section XI, 1995 Edition through the 2003 Addenda (Reference 3.9-43).

The COL Applicant is to provide the program plan for IST of dynamic restraints in accordance with ASME OM Code (Reference 3.9-14).

3.9.6.5 Relief Request and Authorization to ASME OM Code

Considerable experience has been used in designing and locating pumps, valves, and dynamic restraints to permit access for performing preservice and IST required by ASME OM Code. Deferral of testing to cold shutdown or refueling outages in conformance with the rules of the ASME OM Code (Reference 3.9-13), since during power operation it is not practical, is not considered a relief request. Relief from the testing requirements of the ASME OM Code is requested when full compliance with requirement of the ASME OM Code is not practical. In such cases, specific information is provided which identifies the applicable code requirements, justification for the relief request and the testing method to be used as an alternative. The IST Program Plan in Tables 3.9-13 (for pumps) and 3.9-14 (for valves) identifies the relief requests.

3.9.7 [Reserved]

3.9.8 [Reserved]

3.9.9 Combined License Information

COL 3.9(1) *The COL Applicant is to assure snubber functionality in harsh service conditions, including snubber materials (e.g., lubricants, hydraulic fluids, seals).*

COL 3.9(2) *The first COL Applicant is to commit to implement a pre-operational vibration assessment program and to prepare the final report consistent with guidance of RG 1.20 for a prototype. Subsequent COL Applicant need only provide information in accordance with the applicable portion of position C.3 of RG 1.20 for Non-Prototype internals.*

COL 3.9(3) *Deleted*

COL 3.9(4) *Deleted*

COL 3.9(5) *Deleted*

COL 3.9(6) *The COL Applicant is to provide the program plan for IST of dynamic restraints in accordance with ASME OM Code.*

COL 3.9(7) *The COL Applicant is to provide alternate method of valve position indicator operation and justification for valves in the IST program plan.*

COL 3.9(8) *The COL Applicant is to administratively control the edition and addenda to be used for the IST program plan for pumps, vavles, and*

dynamic restraints.

COL 3.9(9) *The COL Applicant is to identify MOVs that require non-intrusive diagnostic testing technique.*

COL 3.9(10) *The COL Applicant is to identify the site-specific active pumps.*

COL 3.9(11) *The COL Applicant is to provide site-specific, safety-related pump IST parameters and frequency.*

COL 3.9(12) *The COL Applicant is to provide type of testing and frequency of site-specific valves subject to IST in accordance with the ASME Code.*

3.9.10 References

3.9-1 Nuclear Power Plant Components, ASME Boiler and Pressure Vessel Code. Section III, Division 1, American Society of Mechanical Engineers. Includes: NCA, NB, NC, ND, NF, NG, Code Cases and Appendices including Appendix I, F, and N, 2001 edition thru 2003 Addenda.[4]

3.9-2 Nuclear Safety Criteria for the Design of Stationary Pressurized Water Reactor Plants, ANS N5.1.1-1983, American Nuclear Society.

3.9-3 Thermal Stresses in Piping Connected to Reactor Coolant Systems, Generic Communications. Bulletin No. 88-08, U.S. Nuclear Regulatory Commission, Washington, DC, June 22, 1988, including Supplements 1, 2, and 3, dated: June 24, 1988; August 4, 1988; and April 11, 1989.

3.9-4 Pressurizer Surge Line Thermal Stratification. Generic Communications, Bulletin No. 88-11, U.S. Nuclear Regulatory Commission, Washington, DC, December 20, 1988.

3.9-5 Fracture Toughness Requirements, Domestic Licensing of Production and Utilization Facilities, Energy. Title 10, Code of Federal Regulations, Part 50, Appendix G, U.S. Nuclear Regulatory Commission, Washington, DC.

3.9-6 Abaqus, Finite Element Structural Analysis Program, Version 6.7, SIMULIA, Providence, RI.

3.9-7 ANSYS, Finite Element Structural Analysis Program, Release 11.0, ANSYS, Inc., Canonsburg, PA, 2007.

3.9-8 RELAP-5, Transient Hydraulic Analysis Program, MOD 3.2, Idaho National Engineering and Environmental Laboratory, Idaho Falls, ID.

3.9-9 MULTIFLEX, A FORTRAN-IV Computer Program for Analyzing Thermal-Hydraulic-Structure System Dynamics. WCAP-8709 (proprietary), and WCAP-8709 (nonproprietary), September 1977.

---

[4] As for the RCL piping the 1992 Edition including 1992 Addenda will be used for ASME Code Section III NB-3200,NB-3600 analyses in accordance with the requirements of 10CFR50.55a(b)(1)(iii).

3.9-10 NASTRAN, Femap with NX NASTRAN, Version 9.3.

3.9-11 Seepage Quantification of Upset in Reactor Tubes [SQUIRT], Code System to Predict Leakage Rate and Area of Crack Opening for Cracked Pipe in Nuclear Power Plants, Version 1.1, Oak Ridge National Laboratory (PSR-533), Oak Ridge, TN, 2003.

3.9-12 Initial Test Programs for Water-Cooled Nuclear Power Plant. Regulatory Guide 1.68, Rev. 3, U.S. Nuclear Regulatory Commission, Washington, DC, March 2007.

3.9-13 Requirements for Preoperational and Initial Startup Vibration Testing of Nuclear Power Plant Piping Systems. Code of Operation and Maintenance of Nuclear Power Plants. OM, American Society of Mechanical Engineers, 1995 Edition through 2003 Addenda.

3.9-14 Code for Pressure Piping, Power Piping. ANSI B31.1, 2004 Edition, American Society of Mechanical Engineers.

3.9-15 IEEE Recommended Practice for Seismic Qualification of Class 1E Equipment for Nuclear Power Generating Stations, Institute of Electrical and Electronics Engineers, IEEE Std 344-1987.

3.9-16 Seismic Qualification of Electric and Mechanical Equipment for Nuclear Power Plants. Regulatory Guide 1.100, Rev.2, U.S. Nuclear Regulatory Commission, Washington, DC, June 1988.

3.9-17 Policy, Technical, and Licensing Issues Pertaining to Evolutionary and Advanced Light-Water Reactor (ALWR) Designs. SECY-93-087, April 2, 1993; SRM-93-087 issued on July 21, 1993.

3.9-18 Combining Modal Responses and Spatial Components in Seismic Response Analysis. Regulatory Guide 1.92, Rev.2, U.S. Nuclear Regulatory Commission, Washington, DC, July 2006.

3.9-19 Combining Modal Responses and Spatial Components in Seismic Response Analysis. Regulatory Guide 1.92, Rev.1, U.S. Nuclear Regulatory Commission, Washington, DC, February 1976.

3.9-20 Damping Values for Seismic Design of Nuclear Power Plants. Regulatory Guide 1.61, Rev.1, U.S. Nuclear Regulatory Commission, Washington, DC, March 2007.

3.9-21 Preoperational Vibration Assessment Program for Reactor Internals During Preoperational and Initial Startup Testing. Regulatory Guide 1.20, Rev.3, U.S. Nuclear Regulatory Commission, Washington, DC, March 2007.

3.9-22 Comprehensive Vibration Assessment Program for US-APWR Reactor Internals. MUAP-07027, Mitsubishi Heavy Industries, December 2007.

3.9-23 Au Yang, M.K. and Connelly, W.H. A Computerized Method for Flow-Induced Random Vibration Analysis of Nuclear Reactor Internals. Nuclear Engineering and Design 42, 1977, pp 277-263.

3.9-24 Test Report of APWR 1/5th Scale Model Flow Test. MUAP-07023, Mitsubishi Heavy Industries, December 2007.

3.9-25 Dynamic Testing and Analysis of Systems, Structures, and Components, Standard Review Plan for the Review of Safety Analysis Reports for Nuclear

Power Plants. NUREG-0800, SRP 3.9.2, Rev.3, U.S. Nuclear Regulatory Commission, Washington, DC, March 2007.

3.9-26 Design Response Spectra for Seismic Design of Nuclear Power Plants. Regulatory Guide 1.60, Rev.1, U.S. Nuclear Regulatory Commission, Washington, DC, December 1973.

3.9-27 Stress Limits for ASME Class 1, 2, and 3 Components and Component Supports, and Core Support Structures Under Specified Service Loading Combinations. Standard Review Plan for the Review of Safety Analysis Reports for Nuclear Power Plants. NUREG-0800 SRP Section 3.9.3 and Appendix A to SRP 3.9.3, Rev.2, U.S. Nuclear Regulatory Commission, Washington, DC, March 2007.

3.9-28 General Design Criteria for Nuclear Power Plants, Domestic Licensing of Production and Utilization Facilities, Energy. Title 10, Code of Federal Regulations, Part 50, Appendix A, U.S. Nuclear Regulatory Commission, Washington, DC.

3.9-29 Codes and Standards, Domestic Licensing of Production and Utilization Facilities, Energy. Title 10, Code of Federal Regulations, Part 50.55a, U.S. Nuclear Regulatory Commission, Washington, DC.

3.9-30 Early Site Permits; Standard Design Certifications; and Combined Licenses for Nuclear Power Plants, Energy. Title 10, Code of Federal Regulations, Part 52, U.S. Nuclear Regulatory Commission, Washington, DC.

3.9-31 Contents of Applications, Early Site Permits; Standard Design Certifications; and Combined Licenses for Nuclear Power Plants, Energy. Title 10, Code of Federal Regulations, Part 52.47(b)(1), U.S. Nuclear Regulatory Commission, Washington, DC.

3.9-32 Issuance of Combined Licenses, Early Site Permits; Standard Design Certifications; and Combined Licenses for Nuclear Power Plants, Energy. Title 10, Code of Federal Regulations, Part 52.80(a), U.S. Nuclear Regulatory Commission, Washington, DC.

3.9-33 Earthquake Engineering Criteria for Nuclear Power Plants, Domestic Licensing of Production and Utilization Facilities, Energy. Title 10, Code of Federal Regulations, Part 50, Appendix S, U.S. Nuclear Regulatory Commission, Washington, DC.

3.9-34 IEEE Recommended Practice for Seismic Qualification of Class 1E Equipment for Nuclear Power Generating Stations, Institute of Electrical and Electronics Engineers, IEEE Std 344-2004.

3.9-35 Plant Design for Protection Against Postulated Piping Failures in Fluid Systems Outside Containment, Standard Review Plan for the Review of Safety Analysis Reports for Nuclear Power Plants. NUREG-0800, SRP 3.6.1, Rev. 3, U.S. Nuclear Regulatory Commission, Washington, DC, March 2007.

3.9-36 Determination of Rupture Locations and Dynamic Effects Associated with the Postulated Rupture of Piping, Standard Review Plan for the Review of Safety Analysis Reports for Nuclear Power Plants. NUREG-0800, SRP 3.6.2, Rev.2, US Nuclear Regulatory Commission, Washington, DC, March 2007.

3.9-37 Evaluation of Potential Pipe Breaks, NUREG-1061, Vol. 3, U.S. Nuclear Regulatory Commission Piping Review Committee, November 1984.

3.9-38 Guidelines for Evaluating Fatigue Analyses incorporating the Life Reduction of Metal Components Due to the Effects of the Light Water Reactor Environment for New Reactors. Regulatory Guide 1.207, Rev.1, U.S. Nuclear Regulatory Commission, Washington, DC, March 2007.

3.9-39 Nuclear Facilities-Steel Safety-Related Structures for Design, Fabrication and Erection. (1994 edition), ANSI/AISC N690, American National Standards Institute/American Nuclear Society.

3.9-40 Manual of Steel Construction. American Institute of Steel Construction, 9th Edition, 1989.

3.9-41 Service Limits and Loading Combinations for Class 1 Linear-Type Component Supports. Regulatory Guide 1.124, Rev.2, US Nuclear Regulatory Commission, Washington, DC, February 2007.

3.9-42 Service Limits and Loading Combinations for Class 1 Plate-and-Shell-Type Component Supports. Regulatory Guide 1.130, Rev.2, U.S. Nuclear Regulatory Commission, Washington, DC, March 2007.

3.9-43 Rules for Inservice Inspection of Nuclear Power Plant Components, ASME Boiler and Pressure Vessel Code. ASME Section XI, American Society of Mechanical Engineers.

3.9-44 Operation and Maintenance Code Case Acceptability, ASME OM Code, Regulatory Guide 1.192, US Nuclear Regulatory Commission, Washington, DC, June 2003.

3.9-45 Requirements for Extending Snubber Inservice Visual Examination Interval at LWR Power Plants, American Society of Mechanical Engineers (ASME) Code Case OMN-13, Rev.0, 2000.

3.9-46 Technical Evaluation of Generic Issue 113: Dynamic Qualification and Testing of Large Bore Hydraulic Snubbers, NUREG/CR-5416, Nitzel, M.E.; Ware, A.G. EG&G Idaho Inc.; Page J.D. NRC; September 1992 (EGG-2571).

3.9-47 Structural Welding Code – Steel. ANSI/AWS D1.1, American National Standards Institute/American Welding Society.

3.9-48 Pipe Support Base Plate Designs using Concrete Expansion Anchor Bolts. IE Bulletin 79-02, Rev.2, U.S. Nuclear Regulatory Commission, Washington, DC, November 1979.

3.9-49 Threaded Fasteners – ASME Code Class 1, 2, and 3, Design of Structures, Components, Equipment, and Systems, Standard Review Plan for the Review of Safety Analysis Reports for Nuclear Power Plants. NUREG-0800, SRP 3.13, Rev.0, U.S. Nuclear Regulatory Commission, Washington, DC, June 1996.

3.9-50 Anchoring to Concrete. ACI 349, American Concrete Institute.

3.9-51 Anchoring Components and Structural Supports in Concrete. Regulatory Guide 1.199, Rev.0, U.S. Nuclear Regulatory Commission, Washington, DC, November 2003

3.9-52 Quality Group Classifications and Standards for Water-, Steam-, and Radioactive-Waste-Containing Components of Nuclear Power Plants. Regulatory Guide 1.26, Rev.4, U.S. Nuclear Regulatory Commission, Washington, DC, March 2007.

3.9-53 Guidance on Developing Acceptable Inservice Testing Program, GL 89-04, U.S. Nuclear Regulatory Commission, Washington, DC, April, 1989.

3.9-54 Periodic Verification of Design Basis Capability of Safety-Related Motor-Operated Valves, GL 96-05, U.S. Nuclear Regulatory Commission, Washington, DC, September, 1996.

3.9-55 Safety-Related Motor-Operated Valves, Testing and Surveillance, GL 89-10, U.S. Nuclear Regulatory Commission, Washington, DC, June 1989.

3.9-56 Primary Reactor Containment Leakage Testing for Water-Cooled Power Reactors, Domestic Licensing of Production and Utilization Facilities, Energy. Title 10, Code of Federal Regulations, Part 50, Appendix J, U.S. Nuclear Regulatory Commission, Washington, DC.

3.9-57 Summary of Design Transient, Mitsubishi Heavy Industries, January 2009.

3.9-58 Summary of Seismic and Accident Load Conditions for Primary Components and Piping Design, Mitsubishi Heavy Industries, January 2009.

3.9-59 Summary of Stress Analysis Results for Components and Piping, Mitsubishi Heavy Industries, March 2009.

Table 3.9-1 RCS Design Transients (Sheet 1 of 2)

Event	Cycles
Level A Service Conditions	
RCP startup	3,000
RCP shutdown	3,000
Plant heat-up	120
Plant cooldown	120
Ramp load increase between 0 and 15 percent of full power	600
Ramp load decrease between 0 and 15 percent of full power	600
Ramp load increase between 15% and 100% of full power (5% of full power per minute)	600
Ramp load increase between 50% and 100% of full power (5% of full power per minute)	19,200
Ramp load decrease between 15% and 100% of full power (5% of full power per minute)	600
Ramp load decrease between 50% and 100% of full power (5% of full power per minute)	19,200
Step load increase of 10 percent of full power	600
Step load decrease of 10 percent of full power	600
Large step load decrease with turbine bypass	60
Steady-state fluctuation and load regulation	-
Steady-state fluctuation	1×10^6
Load regulation	8×10^5
Boron concentration equalization	39,600
Main feedwater cycling	2,100
Core lifetime extension	60
Refueling	120
Turbine roll test	10
Primary Leakage Test	120
Secondary Leakage Test	120
Level B Service Conditions	
Loss of load	60
Loss of offsite power	60
RT from full power	-
With no inadvertent cooldown	60
With cooldown and no Safety Injection	30
With cooldown and Safety Injection	10

Table 3.9-1 RCS Design Transients (Sheet 2 of 2)

Event	Cycles
Level B Service Conditions (Continued)	
Control rod drop	30
Cold over-pressure	30
Inadvertent safeguards actuation	30
Partial loss of reactor coolant flow	30
Inadvertent RCS depressurization	-
Umbrella case	30
Inadvertent auxiliary spray	15
Emergency feedwater cycling	700
Partial loss of emergency feedwater	30
Level C Service Conditions	
Small LOCA	5
Small steam line break	5
Complete loss of flow	5
Small feedwater line break	5
SG tube rupture	5
Level D Service Conditions	
Reactor coolant pipe break (large LOCA)	1
Large steam line break	1
Large feedwater line break	1
RCP locked rotor	1
Control rod ejection	1
Test Conditions	
Primary side hydrotest	10
Secondary side hydrotest	10

Table 3.9-2 Reactor Internals Interface Load and Displacement Limits

Reactor Interface Requirements	Load Limit	Displacement Limit	Other Limit
(a)Allowable horizontal load of the RCCA guide tube should not impede insertion of the RCCA after the LOCA event.	X(2)	n/a(1)	
(b)Upper core barrel radial displacement to prevent impeding emergency core cooling flow in RV downcomer	n/a	2.36in (60mm)	
(c)RV and upper head flange loads	X	n/a	Bearing area
Lower radial key loads	X	n/a	Bearing area
Postulated core drop bottom of RV impact load	X	n/a	Bearing area
(d) The maximum vertical displacement of the upper core plate relative to the upper support plate should preclude buckling of the guide tube.	n/a	0.12in (3mm)	
(e)Upper core barrel permanent displacement should not prevent loss of function of the RCCA by radial inwardly deforming the upper guide tube.	n/a	10.63in (270mm)	

Notes:

1. The designation n/a means not applicable.
2. The letter X means a displacement requirement or load as defined in the design specification.

Table 3.9-3 Minimum Design Loading Combinations for ASME Code, Section III, Class 1, 2, 3 and CS Systems and Components

ASME Service Level	Design Loading Combinations(3)(6)(12)
Design	$P + DL + L_{DM} + L_{EM}$
Level A	$P_M^{(1)} + DL + L_{EM}$
	$P_M^{(1)} + DL + L_{DFN} + L_{EM}^{(7)} + TH_{TRN} + TH_{MTL}$
Level B	$P_M^{(1)} + DL + L_{EM}^{(7)} + TH_{TRN} + TH_{MTL} + SRSS^{(2)}((SSEI + SSEA)^{(11)} + L_{DFU})$
Level C	$P_M^{(1)} + DL + L_{DFE}^{(5)} + L_{EM}^{(7)}$
	$P_M^{(1)} + DL + L_{DF} + L_{EM}^{(8)}$
Level D	$P_M^{(1)} + DL + L_{DFF} + L_{EM}^{(7)}$
	$P_M^{(1)} + DL + SRSS^{(2)}((SSEI + SSEA) + DBPB) + L_{EM}^{(4)}$
	$P_M^{(1)} + DL + RV_{OS} + SRSS^{(2)}(SSEI + SSEA) + L_{EM}^{(9)}$
	$P_M^{(1)} + DL + L_{DFS} + SRSS^{(2)}((SSEI + SSEA) + DBPB + L_{DF}) + L_{EM}^{(8)}$

Notes:

1. P_M is the maximum operational pressure for various ASME service levels of operation and dependent on the type of transient that occurs at a particular service level. During an earthquake P_M is considered normal operational pressure at 100% power levels.
2. SRSS sums the squares of each load and determines the resultant square root.
3. Loadings generated by static displacement of the concrete containment vessel and building settlement are added to the loading combinations for ASME Code, Section III, Class 2 and 3 systems.
4. When determining appropriate load combinations involving L_{EM}, a determination of the timing sequence and initiating conditions that occur between P_M and L_{EM} are considered.
5. Pressurizer safety valve discharge and associated load is classified under an emergency service condition.
6. Table 3.9-5 provides a description of loads listed in this table.
7. In determining service level A, B, C, and D load combinations, the timing sequence and initiating conditions that occur between P_M, L_{DFN}, L_{DFU}, L_{DFE}, L_{DFF}, and L_{EM}, are considered respectively.
8. In determining appropriate service level load combination, the timing sequence and initiating conditions that occur between P_M, L_{DF}, and L_{EM}, are considered.
9. In determining appropriate service level load combination, the timing sequence and initiating conditions that occur between P_M, RV_{OS}, and L_{EM}, are considered.
10. If, during operation, the system normally carries a medium other than water (air, gas, steam), sustained loads should be checked for weight loads during hydrostatic testing as well as normal operation weight loads.
11. The earthquake inertial and anchor movement loads used in the Level B Stress Intensity Range and Alternating Stress calculations are taken as 1/3 of the peak SSE inertial and anchor movement loads or as the peak SSE inertial and anchor movement loads. If the earthquake loads are taken as 1/3 of the peak SSE loads then the number of cycles to be considered for earthquake loading are 300 as derived in accordance with Appendix D of Institute of Electrical and Electronic Engineers Standard 344-1987 (Reference. 3.9-15). If the earthquake loads are taken as the peak SSE loads then 20 cycles of earthquake loading are considered.
12. If a loading is considered negligible or is non-existent, it is ignored in the service level combinations.

Table 3.9-4 Minimum Design Loading Combinations for Supports for ASME Code, Section III, Class 1, 2, and 3 Piping and Components(2)

Condition	Design Loading Combinations(3)(10)
Design	$DL + L_{DM}$
Level A Service	$DL + TH_i + L_{EM} + L_{DFN}(4)+ F$
Level B Service	$DL + TH_i + L_{EM} + L_{DFU}$(4))
Level C Service	$DL + TH_i + L_{EM} + L_{DFE}$(5)(4)
	$DL + TH_i + L_{EM} + L_{DF}$
Level D Service	$DL + TH_i + L_{EM} + RV_{OS} + SSEI + SSEA + SE$(6)(8)
	$DL + TH_i + L_{EM} + L_{DFF}$(4)
	$DL + TH_i + L_{EM} + SRSS\ (DBPB + (SSEI + SSEA + SE))$(6)
	$DL + TH_i + L_{EM} + L_{DFS} + SRSS\ (DBPB + (SSEI + SSEA + SE))$(6) $+ L_{DF}$)(7)
Hydrostatic Test	H_{DL}(9)

Notes:

1. SRSS sums the squares of each load and determines the resultant square root.
2. Loadings generated by static displacement of the concrete containment vessel and building settlement are added to the loading combinations for ASME Code, Section III, Class 2 and 3 systems.
3. Table 3.9-5 provides a description of loads listed in this table.
4. In determining service level A, B, C, and D load combinations, the timing sequence and initiating conditions that occur between TH_i, L_{DFN}, L_{DFU}, L_{DFE}, L_{DFF}, and L_{EM}, are considered respectively.
5. Pressurizer safety valve discharge and associated load is classified under an emergency service condition.
6. SE is support self weight excitation of the support, caused by seismic building inertial loads. SSEI, SSEA, and SE are combined using absolute summation.
7. In determining appropriate service level load combination, the timing sequence and initiating conditions that occur among TH_i and L_{DF} are considered.
8. In determining appropriate service level load combination, the timing sequence and initiating conditions that occur among TH_i and RV_{OS} are considered.
9. If, during operation, the system normally carries a medium other than water (air, gas, steam), sustained loads should be checked for weight loads during hydrostatic testing as well as normal operation weight loads.
10. If a loading is considered negligible or is non-existent, it is ignored in the service level combinations.

Table 3.9-5 ASME Code, Section III, Class 1, 2, 3, CS, and Support Load Symbols and Definitions (Sheet 1 of 2)

Load Symbol	Load Definition	
DL	Dead Load (The dead weight consists of the weight of the piping, structures, components, insulation, and other loads permanently imposed upon the piping)	
P	Design Pressure, psi	
P_M	Maximum service pressure, psi	
F	Friction Loads	
TH_i	Thermal Loading for ASME Service Conditions, i = applicable service level (TH_N, TH_U, TH_{MTL}, see below)	
	TH_N =	ASME Service Level A (Normal) Thermal Loads
	TH_U = TH_{MTL}	ASME Service Level B (Upset) Thermal Loads ASME Service Level A (Normal) and Level B(Upset) Miscellaneous Thermal Loads with Thermal Stratification and Thermal Cycling Effects
TH_{TRN}	Thermal Transient Load	
L_{EM}	External Mechanically Applied Loads, Including Equipment Nozzle-to-Pipe Reactions	
L_{DM}	Design Mechanical Loads other than DL. This includes Service Level A Loads and Open Relief Valve Dynamic Loads that are Service Level B	
SSEI	Safe-shutdown Earthquake Inertia Loads	
SSEA	Safe-shutdown Earthquake Anchor Loads Other Than Pipe Reactions	
L_{DF}	Dynamic Loads (Transient Valve Loads including Qvc (Quick Valve Closure), RV_C (Relief Valve Closed System Sudden Opening), RV_O (Relief Valve Open System Sudden Opening) associated with ASME Level A, B, C, and D Service Conditions	
L_{DFS}	Sustained Dynamic Loads Associated with ASME Level A, B, C, and D Service Conditions	
L_{DFN}	ASME Service Level A (Normal) Dynamic Loads (Transient Valve Loads including QV_C (Quick Valve Closure), RV_C (Relief Valve Closed System Sudden Opening), RV_O (Relief Valve Open System Sudden Opening)	
L_{DFU}	ASME Service Level B (Upset) Dynamic Loads (Transient Valve Loads including QV_C (Quick Valve Closure))	
L_{DFE}	ASME Service Level C (Emergency) Dynamic Loads (Transient Valve Loads including QV_C (Quick Valve Closure))	
L_{DFF}	ASME Service Level D (Faulted) Dynamic Loads (Transient Valve Loads including QV_C (Quick Valve Closure))	
SE	SE is Support self weight excitation, the effect of the acceleration of the support mass caused by building inertial loads such as SSEI	

Table 3.9-5 ASME Code, Section III, Class 1, 2, 3, CS, and Support Load Symbols and Definitions (Sheet 2 of 2)

Load Symbol	Load Definition
RV_{OS}	Relief Valve Open System Sudden Opening Sustained
H_{DL}	Hydrostatic Dead Load Weight added during Testing. This weight consists of the weight of the fluid being handled or of the fluid used for testing or cleaning, whichever is greater.
DBPB	Design Basis Pipe Break
MSPB	Main Steam Pipe Break
FWPB	Feedwater Pipe Break
LOCA	Loss of Coolant Accident
SOT	System Operational Transient
Sustained Loads	Normal Operating Loads such as DL, P_M, and TH
Transient Loads	Dynamic System Loads that result from sudden system operational changes
Dynamic Loads	Fluid Pressure Transient Loads that occur as a result of sudden system operational changes.
$PCCV_{NU}$	Static displacement of concrete containment vessel - normal and upset conditions
$PCCV_E$	Static displacement of concrete containment vessel - emergency condition
$PCCV_F$	Static displacement of concrete containment vessel - faulted condition

Table 3.9-6 Stress Criteria for ASME Code, Section III, Class 1, Components[1] and Supports and Class CS Core Supports

Design/Service Level	Vessels/Tanks Pumps	Piping [7]	Core Supports	Valves, Disks & Seats	Components Supports [2][3]
Design and Service Level A (Normal)	ASME Code, Section III, NB-3221, 3222	See Section 3.12	ASME Code, Section III, NG-3221, 3222, 3231, 3232	ASME Code, Section III, NB-3520, 3525	ASME Code, Section III, Subsection NF [4]
Service Level B (Upset)	ASME Code, Section III, NB-3223	See Section 3.12	ASME Code, Section III, NG-3223, 3233	ASME Code, Section III, NB-3525	ASME Code, Section III, Subsection NF [4]
Service Level C (Emergency)	ASME Code, Section III, NB-3224	See Section 3.12	ASME Code, Section III, NG-3224, 3234	ASME Code, Section III, NB-3526	ASME Code, Section III, Subsection NF [4]
Service Level D (Faulted)	ASME Code, Section III, (see 3.9.1.4) NB-3225 (no active Class 1 pumps used)	See Section 3.12	ASME Code, Section III, NG-3225, 3235	(1) (6)	ASME Code, Section III, Subsection NF [4], (see 3.9.3.4) [5]

Notes:

1. Refer to ASME III Appendix F for pressure boundary integrity requirements.
2. Component supports include equipment and piping supports. For pipe support criteria explanation refer to Section 3.12 of the DCD. For component supports refer to Section 3.9.3 of the DCD.
3. RG 1.124, Rev. 1 provides additional methods that can be used for evaluating component supports in addition to ASME Code, Section III, Subsection NF requirements.
4. ASME Code, Section III, Subsection NF, Table 3131(a)-1 provides reference paragraphs for subsection NF procedural sections used for design of component supports, piping supports, and standard supports.
5. Subsection 3.9.3.4 provides criteria for component supports used for active equipment, valves, and piping with active valves.
6. Active valve operability is demonstrated by testing or analysis. Pressure integrity verification of active valves is based on using the ASME Code allowables one level less than the service loading condition. Subsection 3.9.3.2 provides additional information on test requirements.
7. Table 3.12-2 includes additional stress limits for piping.

Table 3.9-7 List of Active Pumps (Sheet 1 of 3)

Pump	System	ASME Class	Normal Operation Mode	Post LOCA Mode	Basis
A-Charging Pump	CVCS	3	ON/OFF	OFF	Required For Supply RCP Seal Cooling at Accident Except Large LOCA
B-Charging Pump	CVCS	3	ON/OFF	OFF	Required For Supply RCP Seal Cooling at Accident Except Large LOCA
A-Safety Injection Pump	SIS	2	OFF	ON	Required For Safety Injection an Emergency Boration
B-Safety Injection Pump	SIS	2	OFF	ON	Required For Safety Injection and Emergency Boration
C-Safety Injection Pump	SIS	2	OFF	ON	Required For Safety Injection and Emergency Boration
D-Safety Injection Pump	SIS	2	OFF	ON	Required For Safety Injection and Emergency Boration
A-Containment Spray/Residual Heat Removal Pump	RHRS	2	OFF	ON	Required For Containment Spray and Plant Shutdown
B-Containment Spray/Residual Heat Removal Pump	RHRS	2	OFF	ON	Required For Containment Spray and Plant Shutdown
C-Containment Spray/Residual Heat Removal Pump	RHRS	2	OFF	ON	Required For Containment Spray and Plant Shutdown
D-Containment Spray/Residual Heat Removal Pump	RHRS	2	OFF	ON	Required For Containment Spray and Plant Shutdown
A-Emergency Feed Water Pump	EFWS	3	OFF	ON	Required For Feedwater Supply to SG at Accident

Table 3.9-7 List of Active Pumps (Sheet 2 of 3)

Pump	System	ASME Class	Normal Operation Mode	Post LOCA Mode	Basis
B-Emergency Feed Water Pump	EFWS	3	OFF	ON	Required For Feedwater Supply to SG
C-Emergency Feed Water Pump	EFWS	3	OFF	ON	Required For Feedwater Supply to SG
D-Emergency Feed Water Pump	EFWS	3	OFF	ON	Required For Feedwater Supply to SG
A-CCW Pump	CCWS	3	ON/OFF	ON	Required For Cooling Water Supply to Safety-Related Component
B-CCW Pump	CCWS	3	ON/OFF	ON	Required For Cooling Water Supply to Safety-Related Component
C-CCW Pump	CCWS	3	ON/OFF	ON	Required For Cooling Water Supply to Safety-Related Component
D-CCW Pump	CCWS	3	ON/OFF	ON	Required For Cooling Water Supply to Safety-Related Component
A-Spent Fuel Pit Pump	SFPCS	3	ON/OFF	ON/OFF	Required For SFP Cooling
B-Spent Fuel Pit Pump	SFPCS	3	ON/OFF	ON/OFF	Required For SFP Cooling
A-Essential Service Water Pump	ESWS	3	ON/OFF	ON	Required For Cooling Water Supply to CCHXs
B-Essential Service Water Pump	ESWS	3	ON/OFF	ON	Required For Cooling Water Supply to CCHXs
C-Essential Service Water Pump	ESWS	3	ON/OFF	ON	Required For Cooling Water Supply to CCHXs
D-Essential Service Water Pump	ESWS	3	ON/OFF	ON	Required For Cooling Water Supply to CCHXs
A-Refueling Water Recirculation Pump	RWS	3	ON/OFF	OFF	Required For Purifying Water in RWSP

Table 3.9-7 List of Active Pumps (Sheet 3 of 3)

Pump	System	ASME Class	Normal Operation Mode	Post LOCA Mode	Basis
B-Refueling Water Recirculation Pump	RWS	3	ON/OFF	OFF	Required For Purifying Water in RWSP
A-Essential Chiller Water Pump	CWS	3	ON/OFF	ON	Required For Cooling Water Supply to HVACS
B-Essential Chiller Water Pump	CWS	3	ON/OFF	ON	Required For Cooling Water Supply to HVACS
C-Essential Chiller Water Pump	CWS	3	ON/OFF	ON	Required For Cooling Water Supply to HVACS
D-Essential Chiller Water Pump	CWS	3	ON/OFF	ON	Required For Cooling Water Supply to HVACS
(Deleted)					

Table 3.9-8 Stress Criteria for ASME Code, Section III Class 2 and 3 Components and Supports

Design/ Service Level	Vessels/Tanks	Piping (6)	Pumps	Valves, Disks, Seats	Component Supports (1)(2)
Design and Service Level A	ASME Code, Section III, NC-3217 NC/ND-3310, 3320	See Section 3.12	ASME Code, Section III, NC/ND-3400	ASME Code, Section III, NC/ND-3510	ASME Code, Section III, (3)
Service Level B (Upset)	ASME Code, Section III, NC/ND-3310, 3320	See Section 3.12	ASME Code, Section III, NC/ND-3400	ASME Code, Section III, NC/ND-3520	ASME Code, Section III, (3)
Service Level C (Emergency)	ASME Code, Section III, NC/ND-3310, 3320	See Section 3.12	ASME Code, Section III, NC/ND-3400	ASME Code, Section III, NC/ND-3520	ASME Code, Section III, (3)
Service Level D (Faulted)	ASME Code, Section III, NC/ND-3310, 3320	See Section 3.12	ASME Code, Section III, NC/ND-3400	ASME Code, Section III, NC/ND-3520 (5)	ASME Code, Section III, (3)(4)

Notes:

1. Component supports include equipment and piping supports. For pipe support criteria explanation refer to Section 3.12 of the DCD. For component supports refer to Section 3.9.3 of the DCD.
2. RG 1.124, Rev. 1 provides additional methods that can be used for evaluating component supports in addition to ASME Code, Section III, Subsection NF requirements.
3. ASME Code, Section III, Subsection NF, Table 3131(a)-1 provides reference paragraphs for Subsection NF procedural sections used for design of component supports, piping supports, and standard supports.
4. Subsection 3.9.3.4 provides criteria for component supports used for active equipment, valves, and piping with active valves.
5. Active valve operability is demonstrated by testing or analysis. Pressure integrity verification of active valves is based on using the ASME Code allowables one level less than the service loading condition. Subsection 3.9.3.2 provides additional information on test requirements.
6. Table 3.12-3 provides additional stress limit information for piping.

Table 3.9-9 CRDM Housing Loading Conditions and Load Combinations

	Service Limits for Load Combinations				
Loading Conditions	**Design**	**Level A and B**	**Level C**	**Level D(1)**	**Testing(5)**
Design Pressure	X(2)	n/a	n/a	n/a	n/a
Deadweights	X	X	X	X	X
1/3 SSE(3)	n/a	X	n/a	n/a	n/a
SSE loads	n/a	n/a	n/a	X	n/a
Normal thermal and pressure transients and thermal expansion	n/a	X	n/a	n/a	n/a
Upset thermal and pressure transients and thermal expansion	n/a	X	n/a	n/a	n/a
Emergency thermal and pressure transients	n/a	n/a	X	n/a	n/a
Faulted pressure	n/a	n/a	n/a	X	n/a
LOCA response load	n/a	n/a	n/a	X	n/a
Hydrostatic test pressure	n/a	n/a	n/a	n/a	X

Notes:

1. Level D loads are combined for SSE and LOCA (LBB) by SRSS.
2. The letter X means stresses to be combined and compared to the design or service stress limits.
3. 1/3 the response of the SSE load and the result is to be applied only in the fatigue analysis for Level A + Level B combined loadings.
4. n/a means not applicable or not required to be analyzed.
5. Testing condition is combined with normal and upset conditions in fatigue analysis.

Table 3.9-10 CRDM Housing Stress Categories and Stress Intensity Limits

Category (1)	Service Limits	Design	Level A + Level B	Level C(6)	Level D
Primary Membrane	P_m	S_m	S_m	$1.2S_m$ or S_y	Lesser of $2.4S_m$ and $0.7S_u$
Local Membrane	P_L	$1.5S_m$	$1.5S_m$	$1.8S_m$ or $1.5S_y$	150% of P_m limits
Primary Membrane + Bending	P_L+P_b	$1.5S_m$	$1.5S_m$	$1.8S_m$ or $1.5S_y$	150% of P_m limits
Primary plus secondary	$P_L + P_b + Q$	---	$3.0S_m$(2)	---	---
Thermal Expansion	P_e	---	$3.0\ S_m$(3)	---	---
Fatigue	U(4)	---	<1.0	---	---
Thermal Stress Ratchet	S_{TH}(5)	---	$<y'S_y$ (5)	---	---

Notes:

1. Definition of stress categories is consistent with NB-3213.

2. Where permitted, the limits of NB-3228.5, simplified elastic-plastic analysis, are met in lieu of the $3.0S_m$ limit.

3. based on support configuration, no significant thermal expansion loads are applied to the CRDMs.

4. U is defined as allowable cycles divided by actual service condition cycles, based on calculated alternating stress and fatigue curve. Alternating stress is adjusted by the modulus of elasticity.

5. S_{TH} thermal stress range, other terms as defined in NB-3222.5.

6. Identified stress limit of the level C is for elastic analysis. If stress intensity by elastic analysis is over the stress limit, ASME section III subsection NB allows limit analysis and triaxial analysis by NB-3224.3.

Table 3.9-11 Core Support Structures and Threaded Structural Fasteners Loading Conditions and Load Combinations

	Service Limits for Load Combinations				
Loading Conditions	**Design**	**Level A(5)**	**Level B**	**Level C(1)**	**Level D(1)**
Pressure differences	X(2)	X	X	n/a(3)	n/a
Weights and buoyant forces	X	X	X	X	X
Lift and drag flow loads	X	X	X	X	X
Reactor internals hold down spring load	X	X	X	X	X
Superimposed internal loads from fuel assembly (f/a) hold-down spring forces; f/a lift forces; f/a weights and buoyant forces; f/a grid loads from SSE and LOCA	X	X	X	X	X
1/3 SSE loads(4)	n/a	n/a	X	n/a	n/a
SSE loads	n/a	n/a	n/a	n/a	X
External reaction loads from restraints at upper core support flange; core barrel flange; core barrel nozzle; radial support keys	n/a	X	X	X	X
Thermal loads from transients, gamma heating, and differential thermal expansion	n/a	X	X	n/a	n/a
LOCA differential pressure loads	n/a	n/a	n/a	X	X
Vibratory loads from flow induced vibration and pump induced vibration	X	X	X	n/a	n/a
RCCA stuck rod load (analyzed separately)	n/a	X	n/a	n/a	n/a
Handling and shipping loads (analyzed separately)	n/a	X	n/a	n/a	n/a

Notes:

1. Level C loads and Level D loads are combined for SSE and LOCA (LBB) by SRSS.
2. The letter X means stresses to be combined and compared to the design or service stress limits. For example, Level B service limits in the ASME Code, Sub-section NG should be larger than the core support structures stress intensity and fatigue usage factors resulting from the combined loadings of pressure difference + weight and buoyant forces + lift and drag forces + external reaction restraints + thermal loads + vibratory loads.
3. n/a means not applicable or not required to be analyzed.
4. The earthquake inertial loads used in the Level B Stress Intensity Range and Alternating Stress calculations are taken as 1/3 of the peak SSE inertial loads. The number of cycles to be considered for earthquake loading are 300 as derived in accordance with Appendix D of Institute of Electrical and Electronic Engineers Standard 344-1987 (Reference 3.9-16).
5. The Hot Functional Test Condition can be enveloped by the limits for Level A.

Table 3.9-12 Core Support Structures Stress Categories and Stress Intensity Limits

Stress Category		Service Limits			
		Design	Level A + Level B	Level C	Level D
Primary Membrane	P_m	S_m	S_m	$1.5S_m$	Lesser of $2.4S_m$ and $0.7S_u$
Primary Membrane + Bending	$P_m + P_b$	$1.5S_m$	$1.5S_m$	$2.25S_m$	Lesser of $3.6S_m$ and $1.05S_u$
Primary Membrane + Bending + Secondary	$P_m + P_b + Q$	---	$3.0S_m$	---	---
Peak	$P_m + P_b + Q + F$	---	$U < 1$	---	---
Average Primary Shear		$0.6S_m$	$0.6S_m$ (1)	$0.9S_m$	$1.2S_m$
Bearing		S_y ($1.5S_y$)	S_y (1) ($1.5S_y$) (1)	$1.5S_y$ ($2.25S_y$)	$2S_y$ ($3S_y$)

Note:

1. Applied only as Level A service limits

Table 3.9-13 Pump IST (Sheet 1 of 7)

Tag No.	Description	Pump Type	Group	Required Test				Test Frequency	Acceptance Criteria
				Outlet Flow	Differential Pressure	Vibration	Speed		
CVS-RPP-001A	A-Charging pump	Centrifugal	A	○	○	○	N/A(constant speed induction motor)	①Quarterly, only flow rate is sampled ②Refueling Phase, Required Test is conducted. ③Biennially, Comprehensive Test is conducted.	Table ISTB-5121-1 in ASME OM Code-2004 is applied.
CVS-RPP-001B	B-Charging pump	Centrifugal	A	○	○	○	N/A(constant speed induction motor)	①Quarterly, only flow rate is sampled ②Refueling Phase, Required Test is conducted ③Biennially, Comprehensive Test is conducted	Table ISTB-5121-1 in ASME OM Code-2004 is applied.
SIS-RPP-001A	A-Safety injection pump	Centrifugal	B	○	-	○	N/A(constant speed induction motor)	①Quarterly, Required Test is conducted ②Biennially, Comprehensive Test is conducted	Table ISTB-5121-1 in ASME OM Code-2004 is applied.
SIS-RPP-001B	B-Safety injection pump	Centrifugal	B	○	-	○	N/A(constant speed induction motor)	①Quarterly, Required Test is conducted ②Biennially, Comprehensive Test is conducted.	Table ISTB-5121-1 in ASME OM Code-2004 is applied.
SIS-RPP-001C	C-Safety injection pump	Centrifugal	B	○	-	○	N/A(constant speed induction motor)	①Quarterly, Required Test is conducted ②Biennially, Comprehensive Test is conducted	Table ISTB-5121-1 in ASME OM Code-2004 is applied.

Table 3.9-13 Pump IST (Sheet 2 of 7)

Tag No.	Description	Pump Type	Group	Required Test				Test Frequency	Acceptance Criteria
				Outlet Flow	Differential Pressure	Vibration	Speed		
SIS-RPP-001D	D-Safety injection pump	Centrifugal	B	○	-	○	N/A(constant speed induction motor)	①Quarterly, Required Test is conducted ②Biennially, Comprehensive Test is conducted	Table ISTB-5121-1 in ASME OM Code-2004 is applied.
RHS-RPP-001A	A-Containment spray/residual heat removal pump	Centrifugal	A	○	○	○	N/A(constant speed induction motor)	①Quarterly, Required Test is conducted ②Biennially, Comprehensive Test is conducted	Table ISTB-5121-1 in ASME OM Code-2004 is applied.
RHS-RPP-001B	B-Containment spray/residual heat removal pump	Centrifugal	A	○	○	○	N/A(constant speed induction motor)	①Quarterly, Required Test is conducted ②Biennially, Comprehensive Test is conducted	Table ISTB-5121-1 in ASME OM Code-2004 is applied.
RHS-RPP-001C	C-Containment spray/residual heat removal pump	Centrifugal	A	○	○	○	N/A(constant speed induction motor)	①Quarterly, Required Test is conducted ②Biennially, Comprehensive Test is conducted	Table ISTB-5121-1 in ASME OM Code-2004 is applied.
RHS-RPP-001D	D-Containment spray/residual heat removal pump	Centrifugal	A	○	○	○	N/A(constant speed induction motor)	①Quarterly, Required Test is conducted ②Biennially, Comprehensive Test is conducted	Table ISTB-5121-1 in ASME OM Code-2004 is applied.
EFS-RPP-001A	A-Emergency feeedwater pump	Turbine Driven Centrifugal	B	○	-	○	○	①Quarterly, Required Test is conducted ②Biennially, Comprehensive Test is conducted	Table ISTB-5121-1 in ASME OM Code-2004 is applied.

Table 3.9-13 Pump IST (Sheet 3 of 7)

Tag No.	Description	Pump Type	Group	Required Test				Test Frequency	Acceptance Criteria
				Outlet Flow	Differential Pressure	Vibration	Speed		
EFS-RPP-001B	B-Emergency feeedwater pump	Motor Driven Centrifugal	B	○	-	○	N/A(constant speed induction motor)	①Quarterly, Required Test is conducted ②Biennially, Comprehensive Test is conducted	Table ISTB-5121-1 in ASME OM Code-2004 is applied.
EFS-RPP-001C	C-Emergency feeedwater pump	Turbine Driven Centrifugal	B	○	-	○	○	①Quarterly, Required Test is conducted ②Biennially, Comprehensive Test is conducted	Table ISTB-5121-1 in ASME OM Code-2004 is applied.
EFS-RPP-001D	D-Emergency feeedwater pump	Motor Driven Centrifugal	B	○	-	○	N/A(constant speed induction motor)	①Quarterly, Required Test is conducted ②Biennially, Comprehensive Test is conducted	Table ISTB-5121-1 in ASME OM Code-2004 is applied.
NCS-RPP-001A	A-Component cooling water pump	Centrifugal	A	○	○	○	N/A(constant speed induction motor)	①Quarterly , only flow rate is sampled ②Refueling Phase, Required Test is conducted ③Biennially, Comprehensive Test is conducted	Table ISTB-5121-1 in ASME OM Code-2004 is applied.
NCS-RPP-001B	B-Component cooling water pump	Centrifugal	A	○	○	○	N/A(constant speed induction motor)	①Quarterly, only flow rate is sampled ②Refueling Phase, Required Test is conducted ③Biennially, Comprehensive Test is conducted	Table ISTB-5121-1 in ASME OM Code-2004 is applied.

Table 3.9-13 Pump IST (Sheet 4 of 7)

Tag No.	Description	Pump Type	Group	Required Test				Test Frequency	Acceptance Criteria
				Outlet Flow	Differential Pressure	Vibration	Speed		
NCS-RPP-001C	C-Component cooling water pump	Centrifugal	A	○	○	○	N/A(constant speed induction motor)	①Quarterly, only flow rate is sampled ②Refueling Phase, Required Test is conducted ③Biennially, Comprehensive Test is conducted	Table ISTB-5121-1 in ASME OM Code-2004 is applied.
NCS-RPP-001D	D-Component cooling water pump	Centrifugal	A	○	○	○	N/A(constant speed induction motor)	①Quarterly ,only flow rate is sampled ②Refueling Phase, Required Test is conducted ③Biennially, Comprehensive Test is conducted	Table ISTB-5121-1 in ASME OM Code-2004 is applied.
EWS-OPP-001A	A-Essential service water pump	Vertical Line Shaft Centrifugal	A	○	○	○	N/A(constant speed induction motor)	①Quarterly ,only flow rate is sampled ②Refueling Phase, Required test is conducted ③Biennially ,Comprehensive Test is conducted	Table ISTB-5221-1 in ASME OM Code-2004 is applied.
EWS-OPP-001B	B-Essential service water pump	Vertical Line Shaft Centrifugal	A	○	○	○	N/A(constant speed induction motor)	①Quarterly ,only flow rate is sampled ②Refueling Phase, required Test is conducted ③Biennially, Comprehensive Test is conducted	Table ISTB-5221-1 in ASME OM Code-2004 is applied.

Table 3.9-13 Pump IST (Sheet 5 of 7)

Tag No.	Description	Pump Type	Group	Required Test				Test Frequency	Acceptance Criteria
				Outlet Flow	Differential Pressure	Vibration	Speed		
EWS-OPP-001C	C-Essential service water pump	Vertical Line Shaft Centrifugal	A	○	○	○	N/A(constant speed induction motor)	①Quarterly only flow rate is sampled ②Refueling Phase, Required Test is conducted ③Biennially, Comprehensive Test is conducted	Table ISTB-5221-1 in ASME OM Code-2004 is applied.
EWS-OPP-001D	D-Essential service water pump	Vertical Line Shaft Centrifugal	A	○	○	○	N/A(constant speed induction motor)	①Quarterly, only flow rate is sampled ②Refueling Phase, Required Test is conducted ③Biennially, Comprehensive Test is conducted	Table ISTB-5221-1 in ASME OM Code-2004 is applied.
SFS-RPP-001A	A-Spent fuel pit pump	Centrifugal	A	○	○	○	N/A(constant speed induction motor)	①Quarterly, only flow rate is sampled ②Refueling Phase, Required Test is conducted ③Biennially, Comprehensive Test is conducted	Table ISTB-5121-1 in ASME OM Code-2004 is applied.
SFS-RPP-001B	B-Spent fuel pit pump	Centrifugal	A	○	○	○	N/A(constant speed induction motor)	①Quarterly, only flow rate is sampled ②Refueling Phase, Required Test is conducted ③Biennially, Comprehensive Test is conducted	Table ISTB-5121-1 in ASME OM Code-2004 is applied.

Table 3.9-13 Pump IST (Sheet 6 of 7)

Tag No.	Description	Pump Type	Group	Required Test				Test Frequency	Acceptance Criteria
				Outlet Flow	Differential Pressure	Vibration	Speed		
RWS-RPP-001A	A-Refueling Water Recirculation Pump	Centrifugal	A	○	○	○	N/A(constant speed induction motor)	①Quarterly, only flow rate is sampled ②Refueling Phase, Required Test is conducted ③Biennially, Comprehensive Test is conducted	Table ISTB-5121-1 in ASME OM Code-2004 is applied.
RWS-RPP-001B	B—Refueling Water Recirculation Pump	Centrifugal	A	○	○	○	N/A(constant speed induction motor)	①Quarterly, only flow rate is sampled ②Refueling Phase, Required Test is conducted ③Biennially, Comprehensive Test is conducted	Table ISTB-5121-1 in ASME OM Code-2004 is applied.
VWS-PPP-001A	A-Essential Chilled Water Pump	Centrifugal	A	○	○	○	N/A(constant speed induction motor)	①Quarterly, only flow rate is sampled ②Refueling Phase, Required Test is conducted ③Biennially, Comprehensive Test is conducted	Table ISTB-5121-1 in ASME OM Code-2004 is applied.

Table 3.9-13 Pump IST (Sheet 7 of 7)

Tag No.	Description	Pump Type	Group	Required Test				Test Frequency	Acceptance Criteria
				Outlet Flow	Differential Pressure	Vibration	Speed		
VWS-PPP-001B	B-Essential Chilled Water Pump	Centrifugal	A	○	○	○	N/A(constant speed induction motor)	①Quarterly, only flow rate is sampled ②Refueling Phase, Required Test is conducted ③Biennially, Comprehensive Test is conducted	Table ISTB-5121-1 in ASME OM Code-2004 is applied.
VWS-PPP-001C	C-Essential Chilled Water Pump	Centrifugal	A	○	○	○	N/A(constant speed induction motor)	①Quarterly, only flow rate is sampled ②Refueling Phase, Required Test is conducted ③Biennially, Comprehensive Test is conducted	Table ISTB-5121-1 in ASME OM Code-2004 is applied.
VWS-PPP-001D	D-Essential Chilled Water Pump	Centrifugal	A	○	○	○	N/A(constant speed induction motor)	①Quarterly, only flow rate is sampled ②Refueling Phase, Required Test is conducted ③Biennially, Comprehensive Test is conducted	Table ISTB-5121-1 in ASME OM Code-2004 is applied.

Table 3.9-14 Valve Inservice Test Requirements (Sheet 1 of 138)

Valve Tag Number	Description	Valve Type	Safety-Related Missions	Safety Functions(2)	ASME IST Category	Inservice Testing Type and Frequency	IST Notes
RCS-VLV-120	Pressurizer safety valve	Relief	Maintain Close Transfer Open Transfer Close	Active RCS Pressure Boundary Remote Position	BC	Remote Position Indication, Alternate/ 2 Years Class 1 Relief Valve Tests/5 Years and 20% in 2 Years	1
RCS-VLV-121	Pressurizer safety valve	Relief	Maintain Close Transfer Open Transfer Close	Active RCS Pressure Boundary Remote Position	BC	Remote Position Indication, Alternate/ 2 Years Class 1 Relief Valve Tests/5 Years and 20% in 2 Years	1
RCS-VLV-122	Pressurizer safety valve	Relief	Maintain Close Transfer Open Transfer Close	Active RCS Pressure Boundary Remote Position	BC	Remote Position Indication, Alternate/ 2 Years Class 1 Relief Valve Tests/5 Years and 20% in 2 Years	1

Table 3.9-14 Valve Inservice Test Requirements (Sheet 2 of 138)

Valve Tag Number	Description	Valve Type	Safety-Related Missions	Safety Functions(2)	ASME IST Category	Inservice Testing Type and Frequency	IST Notes
RCS-VLV-123	Pressurizer safety valve	Relief	Maintain Close Transfer Open Transfer Close	Active RCS Pressure Boundary Remote Position	BC	Remote Position Indication, Alternate/ 2 Years Class 1 Relief Valve Tests/5 Years and 20% in 2 Years	1
RCS-MOV-117A	Safety depressurization valve	Remote	Maintain Close Transfer Open Transfer Close	Active RCS Pressure Boundary Remote Position	B	Remote Position Indication, Exercise/ 2 Years Exercise Full Stroke/Cold Shutdown Operability Test	2
RCS-MOV-117B	Safety depressurization valve	Remote	Maintain Close Transfer Open Transfer Close	Active RCS Pressure Boundary Remote Position	B	Remote Position Indication, Exercise/ 2 Years Exercise Full Stroke/Cold Shutdown Operability Test	2

Table 3.9-14 Valve Inservice Test Requirements (Sheet 3 of 138)

Valve Tag Number	Description	Valve Type	Safety-Related Missions	Safety Functions(2)	ASME IST Category	Inservice Testing Type and Frequency	IST Notes
RCS-MOV-116A	Safety depressurization valve block valve	Remote	Maintain Open Maintain Close Transfer Close Transfer Open	Active RCS Pressure Boundary Remote Position	B	Remote Position Indication, Exercise/ 2 Years Exercise Full Stroke/ Quarterly Operability Test	
RCS-MOV-116B	Safety depressurization valve block valve	Remote	Maintain Open Maintain Close Transfer Close Transfer Open	Active RCS Pressure Boundary Remote Position	B	Remote Position Indication, Exercise/ 2 Years Exercise Full Stroke/ Quarterly Operability Test	
(Deleted)							
(Deleted)							

Table 3.9-14 Valve Inservice Test Requirements (Sheet 4 of 138)

Valve Tag Number	Description	Valve Type	Safety-Related Missions	Safety Functions(2)	ASME IST Category	Inservice Testing Type and Frequency	IST Notes
RCS-MOV-002A	Reactor vessel head vent valve	Remote	Maintain Close Transfer Open Transfer Close	Active RCS Pressure Boundary Remote Position	B	Remote Position Indication, Exercise/ 2 Years Exercise Full Stroke/Cold Shutdown Operability Test	2
RCS-MOV-002B	Reactor vessel head vent valve	Remote	Maintain Close Transfer Open Transfer Close	Active RCS Pressure Boundary Remote Position	B	Remote Position Indication, Exercise/ 2 Years Exercise Full Stroke/Cold Shutdown Operability Test	2
RCS-MOV-003A	Reactor vessel head vent valve	Remote	Maintain Close Transfer Open Transfer Close	Active RCS Pressure Boundary Remote Position	B	Remote Position Indication, Exercise/ 2 Years Exercise Full Stroke/Cold Shutdown Operability Test	2
RCS-MOV-003B	Reactor vessel head vent valve	Remote	Maintain Close Transfer Open Transfer Close	Active RCS Pressure Boundary Remote Position	B	Remote Position Indication, Exercise/ 2 Years Exercise Full Stroke/Cold Shutdown Operability Test	2

Table 3.9-14 Valve Inservice Test Requirements (Sheet 5 of 138)

Valve Tag Number	Description	Valve Type	Safety-Related Missions	Safety Functions(2)	ASME IST Category	Inservice Testing Type and Frequency	IST Notes
RCS-AOV-132	Nitrogen gas supply line containment isolation	Remote	Maintain Close Transfer Close	Active-to-Fail Containment Isolation Safety Seat Leakage Remote Position	A	Remote Position Indication, Exercise/ 2 Years Containment Isolation Leak Test Exercise Full Stroke/ Cold Shutdown Operability Test	5 6
RCS-VLV-133	Nitrogen gas supply line containment isolation check	Check	Maintain Close Transfer Close	Active Containment Isolation Safety Seat Leakage	AC	Containment Isolation Leak Test Check Exercise/ Refueling Outage	3 5
RCS-AOV-138	Primary makeup water supply line containment isolation	Remote	Maintain Close Transfer Close	Active-to-Fail Containment Isolation Safety Seat Leakage Remote Position	A	Remote Position Indication, Exercise/ 2 Years Containment Isolation Leak Test Exercise Full Stroke/Cold Shutdown Operability Test	5 6

Table 3.9-14 Valve Inservice Test Requirements (Sheet 6 of 138)

Valve Tag Number	Description	Valve Type	Safety-Related Missions	Safety Functions(2)	ASME IST Category	Inservice Testing Type and Frequency	IST Notes
RCS-VLV-139	Primary makeup water supply line containment isolation check	Check	Maintain Close Transfer Close	Active Containment Isolation Safety Seat Leakage	AC	Containment Isolation Leak Test Check Exercise/ Refueling Outage	3 5
RCS-AOV-147	Pressurizer relief tank gas analyzer line containment isolation	Remote	Maintain Close Transfer Close	Active-to-Fail Containment Isolation Safety Seat Leakage Remote Position	A	Remote Position Indication, Exercise/ 2 Years Containment Isolation Leak Test Exercise Full Stroke/ Cold Shutdown Operability Test	5 6
RCS-AOV-148	Pressurizer relief tank gas analyzer line containment isolation	Remote	Maintain Close Transfer Close	Active-to-Fail Containment Isolation Safety Seat Leakage Remote Position	A	Remote Position Indication, Exercise/ 2 Years Containment Isolation Leak Test Exercise Full Stroke/ Cold Shutdown Operability Test	5 6

Table 3.9-14 Valve Inservice Test Requirements (Sheet 7 of 138)

Valve Tag Number	Description	Valve Type	Safety-Related Missions	Safety Functions(2)	ASME IST Category	Inservice Testing Type and Frequency	IST Notes
RCS-VLV-140	Vacuum venting line check valve bypass	Manual	Maintain Close	Passive Containment Isolation Safety Seat Leakage	A	Containment Isolation Leak Test	5
	Pressurizer relief tank rupture disk	Rupture Disk	Transfer Open	Active	D	Device replacement/ 5 Years	
	Pressurizer relief tank rupture disk	Rupture Disk	Transfer Open	Active	D	Device replacement/ 5 Years	
CVS-AOV-001A	Letdown valve	Remote	Transfer Close Maintain Close	Active-to-Fail Remote Position	B	Remote Position Indication, Exercise/ 2 Years Exercise Full Stroke/Cold Shutdown Operability Test	4
CVS-AOV-001B	Letdown valve	Remote	Transfer Close Maintain Close	Active-to-Fail Remote Position	B	Remote Position Indication, Exercise/ 2 Years Exercise Full Stroke/Cold Shutdown Operability Test	4

Table 3.9-14 Valve Inservice Test Requirements (Sheet 8 of 138)

Valve Tag Number	Description	Valve Type	Safety-Related Missions	Safety Functions(2)	ASME IST Category	Inservice Testing Type and Frequency	IST Notes
CVS-AOV-001C	Letdown valve	Remote	Transfer Close Maintain Close	Active-to-Fail Remote Position	B	Remote Position Indication, Exercise/ 2 Years Exercise Full Stroke/Cold Shutdown Operability Test	4
CVS-LCV-451	Letdown line isolation	Remote	Maintain Close Transfer Close	Active-to-Fail RCS Pressure Boundary Remote Position	B	Remote Position Indication, Exercise/ 2 Years Exercise Full Stroke/Cold Shutdown Operability Test	4
CVS-LCV-452	Letdown line isolation	Remote	Maintain Close Transfer Close	Active-to-Fail RCS Pressure Boundary Remote Position	B	Remote Position Indication, Exercise/ 2 Years Exercise Full Stroke/Cold Shutdown Operability Test	4

Table 3.9-14 Valve Inservice Test Requirements (Sheet 9 of 138)

Valve Tag Number	Description	Valve Type	Safety-Related Missions	Safety Functions(2)	ASME IST Category	Inservice Testing Type and Frequency	IST Notes
CVS-AOV-005	Letdown containment isolation	Remote	Maintain Close Transfer Close	Active-to-Fail Containment Isolation Safety Seat Leakage Remote Position	A	Remote Position Indication, Exercise/ 2 Years Containment Isolation Leak Test Exercise Full Stroke/ Cold Shutdown Operability Test	4 5
CVS-AOV-006	Letdown containment isolation	Remote	Maintain Close Transfer Close	Active-to-Fail Containment Isolation Safety Seat Leakage Remote Position	A	Remote Position Indication, Exercise/ 2 Years Containment Isolation Leak Test Exercise Full Stroke/ Cold Shutdown Operability Test	4 5
CVS-MOV-152	Charging line containment isolation	Remote	Maintain Close Transfer Close	Active Containment Isolation Safety Seat Leakage Remote Position	A	Remote Position Indication, Exercise/ 2 Years Containment Isolation Leak Test Exercise Full Stroke/Cold Shutdown Operability Test	4 5

Table 3.9-14 Valve Inservice Test Requirements (Sheet 10 of 138)

Valve Tag Number	Description	Valve Type	Safety-Related Missions	Safety Functions(2)	ASME IST Category	Inservice Testing Type and Frequency	IST Notes
CVS-MOV-151	Charging line isolation	Remote	Maintain Close Transfer Close	Active Remote Position	B	Remote Position Indication, Exercise/ 2 Years Exercise Full Stroke/Cold Shutdown Operability Test	4
CVS-VLV-153	Charging line containment isolation check	Check	Maintain Close Transfer Close	Active Containment Isolation Safety Seat Leakage	AC	Containment Isolation Leak Test Check Exercise/ Refueling Outage	3 5
CVS-AOV-155	Auxiliary pressurizer spray line isolation	Remote	Maintain Close Transfer Close	Active-to-Fail RCS Pressure Boundary Remote Position	B	Remote Position Indication, Exercise/ 2 Years Exercise Full Stroke/Cold Shutdown Operability Test	4
CVS-VLV-156	Auxiliary pressurizer spray line check	Check	Maintain Close Transfer Close	Active RCS Pressure Boundary	BC	Check Exercise/ Refueling Outage	3

Table 3.9-14 Valve Inservice Test Requirements (Sheet 11 of 138)

Valve Tag Number	Description	Valve Type	Safety-Related Missions	Safety Functions(2)	ASME IST Category	Inservice Testing Type and Frequency	IST Notes
CVS-AOV-159	Charging line isolation	Remote	Maintain Close Transfer Close Transfer Open	Active-to-Fail RCS Pressure Boundary Remote Position	B	Remote Position Indication, Exercise/ 2 Years Exercise Full Stroke/Cold Shutdown Operability Test	4
CVS-VLV-161	Charging line check (First)	Check	Maintain Close Transfer Close	Active RCS Pressure Boundary	BC	Check Exercise/ Refueling Outage	3
CVS-VLV-160	Charging line check (Second)	Check	Maintain Close Transfer Close	Active RCS Pressure Boundary	BC	Check Exercise/ Refueling Outage	3
CVS-MOV-178A	Reactor coolant pump seal injection line containment isolation	Remote	Maintain Close Transfer Close Maintain Open	Active Containment Isolation Safety Seat Leakage Remote Position	A	Remote Position Indication, Exercise/ 2 Years Containment Isolation Leak Test Exercise Full Stroke/Cold Shutdown Operability Test	5 7

Table 3.9-14 Valve Inservice Test Requirements (Sheet 12 of 138)

Valve Tag Number	Description	Valve Type	Safety-Related Missions	Safety Functions(2)	ASME IST Category	Inservice Testing Type and Frequency	IST Notes
CVS-VLV-179A	Reactor coolant pump seal injection line containment isolation check	Check	Maintain Close Transfer Close Transfer Open Maintain Open	Active Containment Isolation Safety Seat Leakage	AC	Containment Isolation Leak Test Check Exercise/ Refueling Outage	3 5
CVS-MOV-178B	Reactor coolant pump seal injection line containment isolation	Remote	Maintain Close Transfer Close Maintain Open	Active Containment Isolation Safety Seat Leakage Remote Position	A	Remote Position Indication, Exercise/ 2 Years Containment Isolation Leak Test Exercise Full Stroke/Cold Shutdown Operability Test	5 7
CVS-VLV-179B	Reactor coolant pump seal injection line containment isolation check	Check	Maintain Close Transfer Close Transfer Open Maintain Open	Active Containment Isolation Safety Seat Leakage	AC	Containment Isolation Leak Test Check Exercise/ Refueling Outage	3 5

Table 3.9-14 Valve Inservice Test Requirements (Sheet 13 of 138)

Valve Tag Number	Description	Valve Type	Safety-Related Missions	Safety Functions(2)	ASME IST Category	Inservice Testing Type and Frequency	IST Notes
CVS-MOV-178C	Reactor coolant pump seal injection line containment isolation	Remote	Maintain Close Transfer Close Maintain Open	Active Containment Isolation Safety Seat Leakage Remote Position	A	Remote Position Indication, Exercise/ 2 Years Containment Isolation Leak Test Exercise Full Stroke/Cold Shutdown Operability Test	5 7
CVS-VLV-179C	Reactor coolant pump seal injection line containment isolation check	Check	Maintain Close Transfer Close Transfer Open Maintain Open	Active Containment Isolation Safety Seat Leakage	AC	Containment Isolation Leak Test Check Exercise/ Refueling Outage	3 5
CVS-MOV-178D	Reactor coolant pump seal injection line containment isolation	Remote	Maintain Close Transfer Close Maintain Open	Active Containment Isolation Safety Seat Leakage Remote Position	A	Remote Position Indication, Exercise/ 2 Years Containment Isolation Leak Test Exercise Full Stroke/Cold Shutdown Operability Test	5 7

Table 3.9-14 Valve Inservice Test Requirements (Sheet 14 of 138)

Valve Tag Number	Description	Valve Type	Safety-Related Missions	Safety Functions(2)	ASME IST Category	Inservice Testing Type and Frequency	IST Notes
CVS-VLV-179D	RCP seal injection line containment isolation check	Check	Maintain Close Transfer Close Transfer Open Maintain Open	Active Containment Isolation Safety Seat Leakage	AC	Containment Isolation Leak Test Check Exercise/ Refueling Outage	3 5
CVS-AOV-192A	Reactor coolant pump seal return line isolation	Remote	Maintain Close Transfer Close	Active-to-Fail Remote Position	B	Remote Position Indication, Exercise/ 2 Years Exercise Full Stroke/ Cold Shutdown Operability Test	7
CVS-AOV-192B	Reactor coolant pump seal return line isolation	Remote	Maintain Close Transfer Close	Active-to-Fail Remote Position	B	Remote Position Indication, Exercise/ 2 Years Exercise Full Stroke/ Cold Shutdown Operability Test	7
CVS-AOV-192C	Reactor coolant pump seal return line isolation	Remote	Maintain Close Transfer Close	Active-to-Fail Remote Position	B	Remote Position Indication, Exercise/ 2 Years Exercise Full Stroke/ Cold Shutdown Operability Test	7

Table 3.9-14 Valve Inservice Test Requirements (Sheet 15 of 138)

Valve Tag Number	Description	Valve Type	Safety-Related Missions	Safety Functions(2)	ASME IST Category	Inservice Testing Type and Frequency	IST Notes
CVS-AOV-192D	Reactor coolant pump seal return line isolation	Remote	Maintain Close	Active-to-Fail Remote Position	B	Remote Position Indication, Exercise/ 2 Years Exercise Full Stroke/ Cold Shutdown Operability Test	7
CVS-AOV-196A	Reactor coolant pump seal return line isolation	Remote	Maintain Close Transfer Close	Active-to Fail Remote Position	B	Remote Position Indication, Exercise/ 2 Years Exercise Full Stroke/ Cold Shutdown Operability Test	7
CVS-AOV-196B	Reactor coolant pump seal return line isolation	Remote	Maintain Close Transfer Close	Active-to Fail Remote Position	B	Remote Position Indication, Exercise/ 2 Years Exercise Full Stroke/ Cold Shutdown Operability Test	7
CVS-AOV-196C	Reactor coolant pump seal return line isolation	Remote	Maintain Close Transfer Close	Active-to Fail Remote Position	B	Remote Position Indication, Exercise/ 2 Years Exercise Full Stroke/ Cold Shutdown Operability Test	7

Table 3.9-14 Valve Inservice Test Requirements (Sheet 16 of 138)

Valve Tag Number	Description	Valve Type	Safety-Related Missions	Safety Functions(2)	ASME IST Category	Inservice Testing Type and Frequency	IST Notes
CVS-AOV-196D	Reactor coolant pump seal return line isolation	Remote	Maintain Close Transfer Close	Active-to Fail Remote Position	B	Remote Position Indication, Exercise/ 2 Years Exercise Full Stroke/ Cold Shutdown Operability Test	7
CVS-MOV-203	Reactor coolant pump seal return line containment isolation	Remote	Maintain Close	Active Containment Isolation Safety Seat Leakage Remote Position	A	Remote Position Indication, Exercise/ 2 Years Containment Isolation Leak Test Exercise Full Stroke/Cold Shutdown Operability Test	5 7
CVS-MOV-204	Reactor coolant pump seal return line containment isolation	Remote	Maintain Close Transfer Close	Active Containment Isolation Safety Seat Leakage Remote Position	A	Remote Position Indication, Exercise/ 2 Years Containment Isolation Leak Test Exercise Full Stroke/Cold Shutdown Operability Test	5 7

Table 3.9-14 Valve Inservice Test Requirements (Sheet 17 of 138)

Valve Tag Number	Description	Valve Type	Safety-Related Missions	Safety Functions(2)	ASME IST Category	Inservice Testing Type and Frequency	IST Notes
CVS-LCV121B	Volume control tank outlet valve	Remote	Transfer Close	Active Remote Position	B	Remote Position Indication, Exercise/ 2 Years Exercise Full Stroke/ Cold Shutdown Operability Test	7
CVS-LCV121C	Volume control tank outlet valve	Remote	Transfer Close	Active Remote Position	B	Remote Position Indication, Exercise/ 2 Years Exercise Full Stroke/ Cold Shutdown Operability Test	7
CVS-LCV121D	Charging pump alternate makeup valve	Remote	Transfer Open Maintain Close Transfer Close	Active Remote Position	B	Remote Position Indication, Exercise/ 2 Years Exercise Full Stroke/ Cold Shutdown Operability Test	7
CVS-LCV121E	Charging pump alternate makeup valve	Remote	Transfer Open Maintain Close Transfer Close	Active Remote Position	B	Remote Position Indication, Exercise/ 2 Years Exercise Full Stroke/ Cold Shutdown Operability Test	7

Table 3.9-14 Valve Inservice Test Requirements (Sheet 18 of 138)

Valve Tag Number	Description	Valve Type	Safety-Related Missions	Safety Functions(2)	ASME IST Category	Inservice Testing Type and Frequency	IST Notes
CVS-LCV121F	Charging pump alternate makeup valve	Remote	Transfer Open Maintain Close Transfer Close	Active Remote Position	B	Remote Position Indication, Exercise/ 2 Years Exercise Full Stroke/ Cold Shutdown Operability Test	7
CVS-LCV121G	Charging pump alternate makeup valve	Remote	Transfer Open Maintain Close Transfer Close	Active Remote Position	B	Remote Position Indication, Exercise/ 2 Years Exercise Full Stroke/ Cold Shutdown Operability Test	7
CVS-VLV-125	Volume control tank outlet check	Check	Maintain Open Transfer Close	Active	BC	Check Exercise/ Refueling Outage	3
CVS-VLV-129A	Charging pump minimum flow check	Check	Maintain Open Transfer Open Transfer Close	Active	BC	Check Exercise/ Refueling Outage	3
CVS-VLV-129B	Charging pump minimum flow check	Check	Maintain Open Transfer Open Transfer Close	Active	BC	Check Exercise/ Refueling Outage	3
CVS-VLV-595	Charging pump alternate makeup line check	Check	Transfer Open	Active	BC	Check Exercise/ Refueling Outage	3

Table 3.9-14 Valve Inservice Test Requirements (Sheet 19 of 138)

Valve Tag Number	Description	Valve Type	Safety-Related Missions	Safety Functions(2)	ASME IST Category	Inservice Testing Type and Frequency	IST Notes
CVS-VLV-592	Charging pump alternate makeup line check	Check	Transfer Open	Active	BC	Check Exercise/ Refueling Outage	3
CVS-VLV-131A	Charging pump discharge check	Check	Maintain Open Transfer Open Transfer Close	Active	BC	Check Exercise/ Refueling Outage	3
CVS-VLV-131B	Charging pump discharge check	Check	Maintain Open Transfer Open Transfer Close	Active	BC	Check Exercise/ Refueling Outage	3
CVS-VLV-181A	Reactor coolant pump seal injection line check (First)	Check	Maintain Open Transfer Open Transfer Close Maintain Close	Active RCS Pressure Boundary	BC	Check Exercise/ Refueling Outage	3
CVS-VLV-181B	Reactor coolant pump seal injection line check (First)	Check	Maintain Open Transfer Open Transfer Close Maintain Close	Active RCS Pressure Boundary	BC	Check Exercise/ Refueling Outage	3
CVS-VLV-181C	Reactor coolant pump seal injection line check (First)	Check	Maintain Open Transfer Open Transfer Close Maintain Close	Active RCS Pressure Boundary	BC	Check Exercise/ Refueling Outage	3
CVS-VLV-181D	Reactor coolant pump seal injection line check (First)	Check	Maintain Open Transfer Open Transfer Close Maintain Close	Active RCS Pressure Boundary	BC	Check Exercise/ Refueling Outage	3

Table 3.9-14 Valve Inservice Test Requirements (Sheet 20 of 138)

Valve Tag Number	Description	Valve Type	Safety-Related Missions	Safety Functions(2)	ASME IST Category	Inservice Testing Type and Frequency	IST Notes
CVS-VLV-182A	Reactor coolant pump seal injection line check (Second)	Check	Maintain Open Transfer Open Transfer Close Maintain Close	Active RCS Pressure Boundary	BC	Check Exercise/ Refueling Outage	3
CVS-VLV-182B	Reactor coolant pump seal injection line check (Second)	Check	Maintain Open Transfer Open Transfer Close Maintain Close	Active RCS Pressure Boundary	BC	Check Exercise/ Refueling Outage	3
CVS-VLV-182C	Reactor coolant pump seal injection line check (Second)	Check	Maintain Open Transfer Open Transfer Close Maintain Close	Active RCS Pressure Boundary	BC	Check Exercise/ Refueling Outage	3
CVS-VLV-182D	Reactor coolant pump seal injection line check (Second)	Check	Maintain Open Transfer Open Transfer Close Maintain Close	Active RCS Pressure Boundary	BC	Check Exercise/ Refueling Outage	3
CVS-FCV-218	Primary makeup water supply isolation	Remote	Transfer Close	Active Remote Position	B	Remote Position Indication, Exercise/ 2 Years Exercise Full Stroke/ Cold Shutdown Operability Test	6

Table 3.9-14 Valve Inservice Test Requirements (Sheet 21 of 138)

Valve Tag Number	Description	Valve Type	Safety-Related Missions	Safety Functions(2)	ASME IST Category	Inservice Testing Type and Frequency	IST Notes
CVS-FCV-219	Primary makeup water supply isolation	Remote	Transfer Close	Active Remote Position	B	Remote Position Indication, Exercise/ 2 Years Exercise Full Stroke/ Cold Shutdown Operability Test	6
CVS-AOV-221	Excess letdown isolation (First)	Remote	Maintain Close Transfer Close	Active-to-Fail RCS Pressure Boundary Remote Position	B	Remote Position Indication, Exercise/ 2 Years Exercise Full Stroke/Cold Shutdown Operability Test	4
CVS-AOV-222	Excess letdown isolation (Second)	Remote	Maintain Close Transfer Close	Active-to-Fail RCS Pressure Boundary Remote Position	B	Remote Position Indication, Exercise/ 2 Years Exercise Full Stroke/Cold Shutdown Operability Test	4
CVS-VLV-002	Letdown line relief	Relief	Maintain Close Transfer Open Transfer Close	Active	BC	Class 2/3 Relief Valve Tests/10 Years and 20% in 4 Years	
CVS-VLV-201	Reactor coolant pump seal water return line relief	Relief	Maintain Close Transfer Open Transfer Close	Active	BC	Class 2/3 Relief Valve Tests/10 Years and 20% in 4 Years	

Table 3.9-14 Valve Inservice Test Requirements (Sheet 22 of 138)

Valve Tag Number	Description	Valve Type	Safety-Related Missions	Safety Functions(2)	ASME IST Category	Inservice Testing Type and Frequency	IST Notes
SIS-MOV-001A	Safety injection pump suction isolation	Remote	Maintain Open Maintain Close Transfer Close	Active Containment Isolation Remote Position	B	Remote Position Indication, Exercise/ 2 Years Exercise Full Stroke/Quarterly Operability Test	
SIS-MOV-001B	Safety injection pump suction isolation	Remote	Maintain Open Maintain Close Transfer Close	Active Containment Isolation Remote Position	B	Remote Position Indication, Exercise/ 2 Years Exercise Full Stroke/Quarterly Operability Test	
SIS-MOV-001C	Safety injection pump suction isolation	Remote	Maintain Open Maintain Close Transfer Close	Active Containment Isolation Remote Position	B	Remote Position Indication, Exercise/ 2 Years Exercise Full Stroke/Quarterly Operability Test	
SIS-MOV-001D	Safety injection pump suction isolation	Remote	Maintain Open Maintain Close Transfer Close	Active Containment Isolation Remote Position	B	Remote Position Indication, Exercise/ 2 Years Exercise Full Stroke/Quarterly Operability Test	

Table 3.9-14 Valve Inservice Test Requirements (Sheet 23 of 138)

Valve Tag Number	Description	Valve Type	Safety-Related Missions	Safety Functions(2)	ASME IST Category	Inservice Testing Type and Frequency	IST Notes
SIS-VLV-004A	Safety injection pump discharge check	Check	Transfer Open	Active	BC	Check Exercise/ Refueling Outage	3
SIS-VLV-004B	Safety injection pump discharge check	Check	Transfer Open	Active	BC	Check Exercise/ Refueling Outage	3
SIS-VLV-004C	Safety injection pump discharge check	Check	Transfer Open	Active	BC	Check Exercise/ Refueling Outage	3
SIS-VLV-004D	Safety injection pump discharge check	Check	Transfer Open	Active	BC	Check Exercise/ Refueling Outage	3
SIS-MOV-009A	Safety injection pump discharge containment isolation	Remote	Maintain Open Maintain Close Transfer Close	Active Containment Isolation Remote Position	B	Remote Position Indication, Exercise/ 2 Years Exercise Full Stroke/Quarterly Operability Test	
SIS-MOV-009B	Safety injection pump discharge containment isolation	Remote	Maintain Open Maintain Close Transfer Close	Active Containment Isolation Remote Position	B	Remote Position Indication, Exercise/ 2 Years Exercise Full Stroke/Quarterly Operability Test	

Table 3.9-14 Valve Inservice Test Requirements (Sheet 24 of 138)

Valve Tag Number	Description	Valve Type	Safety-Related Missions	Safety Functions(2)	ASME IST Category	Inservice Testing Type and Frequency	IST Notes
SIS-MOV-009C	Safety injection pump discharge containment isolation	Remote	Maintain Open Maintain Close Transfer Close	Active Containment Isolation Remote Position	B	Remote Position Indication, Exercise/ 2 Years Exercise Full Stroke/Quarterly Operability Test	
SIS-MOV-009D	Safety injection pump discharge containment isolation	Remote	Maintain Open Maintain Close Transfer Close	Active Containment Isolation Remote Position	B	Remote Position Indication, Exercise/ 2 Years Exercise Full Stroke/Quarterly Operability Test	
SIS-VLV-010A	Safety injection pump discharge containment isolation check	Check	Maintain Close Transfer Open Transfer Close	Active Containment Isolation	BC	Check Exercise/ Refueling Outage	3
SIS-VLV-010B	Safety injection pump discharge containment isolation check	Check	Maintain Close Transfer Open Transfer Close	Active Containment Isolation	BC	Check Exercise/ Refueling Outage	3
SIS-VLV-010C	Safety injection pump discharge containment isolation check	Check	Maintain Close Transfer Open Transfer Close	Active Containment Isolation	BC	Check Exercise/ Refueling Outage	3

Table 3.9-14 Valve Inservice Test Requirements (Sheet 25 of 138)

Valve Tag Number	Description	Valve Type	Safety-Related Missions	Safety Functions(2)	ASME IST Category	Inservice Testing Type and Frequency	IST Notes
SIS-VLV-010D	Safety injection pump discharge containment isolation check	Check	Maintain Close Transfer Open Transfer Close	Active Containment Isolation	BC	Check Exercise/ Refueling Outage	3
SIS-MOV-011A	Direct vessel safety injection line isolation	Remote	Maintain Open Maintain Close Transfer Close	Active Remote Position	B	Remote Position Indication, Exercise/ 2 Years Exercise Full Stroke/Quarterly Operability Test	
SIS-MOV-011B	Direct vessel safety injection line isolation	Remote	Maintain Open Maintain Close Transfer Close	Active Remote Position	B	Remote Position Indication, Exercise/ 2 Years Exercise Full Stroke/Quarterly Operability Test	
SIS-MOV-011C	Direct vessel safety injection line isolation	Remote	Maintain Open Maintain Close Transfer Close	Active Remote Position	B	Remote Position Indication, Exercise/ 2 Years Exercise Full Stroke/Quarterly Operability Test	

Table 3.9-14 Valve Inservice Test Requirements (Sheet 26 of 138)

Valve Tag Number	Description	Valve Type	Safety-Related Missions	Safety Functions(2)	ASME IST Category	Inservice Testing Type and Frequency	IST Notes
SIS-MOV-011D	Direct vessel safety injection line isolation	Remote	Maintain Open Maintain Close Transfer Close	Active Remote Position	B	Remote Position Indication, Exercise/ 2 Years Exercise Full Stroke/Quarterly Operability Test	
SIS-VLV-012A	Direct vessel injection line check	Check	Maintain Close Transfer Open	Active RCS Pressure Boundary Safety Seat Leakage	AC	Check Exercise/Refueling Outage Pressure Isolation Leak Test/ Refueling Outage	3
SIS-VLV-013A	Direct vessel injection line check	Check	Maintain Close Transfer Open	Active RCS Pressure Boundary Safety Seat Leakage	AC	Check Exercise/Refueling Outage Pressure Isolation Leak Test/ Refueling Outage	3
SIS-VLV-012B	Direct vessel injection line check	Check	Maintain Close Transfer Open	Active RCS Pressure Boundary Safety Seat Leakage	AC	Check Exercise/Refueling Outage Pressure Isolation Leak Test/ Refueling Outage	3

Table 3.9-14 Valve Inservice Test Requirements (Sheet 27 of 138)

Valve Tag Number	Description	Valve Type	Safety-Related Missions	Safety Functions(2)	ASME IST Category	Inservice Testing Type and Frequency	IST Notes
SIS-VLV-013B	Direct vessel injection line check	Check	Maintain Close Transfer Open	Active RCS Pressure Boundary Safety Seat Leakage	AC	Check Exercise/Refueling Outage Pressure Isolation Leak Test/ Refueling Outage	3
SIS-VLV-012C	Direct vessel injection line check	Check	Maintain Close Transfer Open	Active RCS Pressure Boundary Safety Seat Leakage	AC	Check Exercise/Refueling Outage Pressure Isolation Leak Test/ Refueling Outage	3
SIS-VLV-013C	Direct vessel injection line check	Check	Maintain Close Transfer Open	Active RCS Pressure Boundary Safety Seat Leakage	AC	Check Exercise/Refueling Outage Pressure Isolation Leak Test/ Refueling Outage	3
SIS-VLV-012D	Direct vessel injection line check	Check	Maintain Close Transfer Open	Active RCS Pressure Boundary Safety Seat Leakage	AC	Check Exercise/Refueling Outage Pressure Isolation Leak Test/ Refueling Outage	3

Table 3.9-14 Valve Inservice Test Requirements (Sheet 28 of 138)

Valve Tag Number	Description	Valve Type	Safety-Related Missions	Safety Functions(2)	ASME IST Category	Inservice Testing Type and Frequency	IST Notes
SIS-VLV-013D	Direct vessel injection line check	Check	Maintain Close Transfer Open	Active RCS Pressure Boundary Safety Seat Leakage	AC	Check Exercise/Refueling Outage Pressure Isolation Leak Test/ Refueling Outage	3
SIS-MOV-014A	Hot leg injection line isolation	Remote	Maintain Close Transfer Open	Active RCS Pressure Boundary Remote Position	B	Remote Position Indication, Exercise/ 2 Years Exercise Full Stroke/Cold Shutdown Operability Test	8
SIS-MOV-014B	Hot leg injection line isolation	Remote	Maintain Close Transfer Open	Active RCS Pressure Boundary Remote Position	B	Remote Position Indication, Exercise/ 2 Years Exercise Full Stroke/Cold Shutdown Operability Test	8
SIS-MOV-014C	Hot leg injection line isolation	Remote	Maintain Close Transfer Open	Active RCS Pressure Boundary Remote Position	B	Remote Position Indication, Exercise/ 2 Years Exercise Full Stroke/Cold Shutdown Operability Test	8

Table 3.9-14 Valve Inservice Test Requirements (Sheet 29 of 138)

Valve Tag Number	Description	Valve Type	Safety-Related Missions	Safety Functions(2)	ASME IST Category	Inservice Testing Type and Frequency	IST Notes
SIS-MOV-014D	Hot leg injection line isolation	Remote	Maintain Close Transfer Open	Active RCS Pressure Boundary Remote Position	B	Remote Position Indication, Exercise/ 2 Years Exercise Full Stroke/Cold Shutdown Operability Test	8
SIS-VLV-015A	Hot leg injection line check	Check	Maintain Close Transfer Open	Active RCS Pressure Boundary Safety Seat Leakage	AC	Check Exercise/Refueling Outage Pressure Isolation Leak Test/ Refueling Outage	3
SIS-VLV-015B	Hot leg injection line check	Check	Maintain Close Transfer Open	Active RCS Pressure Boundary Safety Seat Leakage	AC	Check Exercise/Refueling Outage Pressure Isolation Leak Test/ Refueling Outage	3
SIS-VLV-015C	Hot leg injection line check	Check	Maintain Close Transfer Open	Active RCS Pressure Boundary Safety Seat Leakage	AC	Check Exercise/Refueling Outage Pressure Isolation Leak Test/ Refueling Outage	3

Table 3.9-14 Valve Inservice Test Requirements (Sheet 30 of 138)

Valve Tag Number	Description	Valve Type	Safety-Related Missions	Safety Functions(2)	ASME IST Category	Inservice Testing Type and Frequency	IST Notes
SIS-VLV-015D	Hot leg recirculation line check	Check	Maintain Close Transfer Open	Active RCS Pressure Boundary Safety Seat Leakage	AC	Check Exercise/Refueling Outage Pressure Isolation Leak Test/ Refueling Outage	3
SIS-MOV-031B	Emergency letdown line isolation (first)	Remote	Maintain Close Transfer Open Transfer Close	Active RCS Pressure Boundary Remote Position	B	Remote Position Indication, Exercise/ 2 Years Exercise Full Stroke /Cold Shutdown Operability Test	2
SIS-MOV-031D	Emergency letdown line isolation (first)	Remote	Maintain Close Transfer Open Transfer Close	Active RCS Pressure Boundary Remote Position	B	Remote Position Indication, Exercise/ 2 Years Exercise Full Stroke /Cold Shutdown Operability Test	2
SIS-MOV-032B	Emergency letdown line isolation (second)	Remote	Maintain Close Transfer Open Transfer Close	Active RCS Pressure Boundary Remote Position	B	Remote Position Indication, Exercise/ 2 Years Exercise Full Stroke /Cold Shutdown Operability Test	2

Table 3.9-14 Valve Inservice Test Requirements (Sheet 31 of 138)

Valve Tag Number	Description	Valve Type	Safety-Related Missions	Safety Functions(2)	ASME IST Category	Inservice Testing Type and Frequency	IST Notes
SIS-MOV-032D	Emergency letdown line isolation (second)	Remote	Maintain Close Transfer Open Transfer Close	Active RCS Pressure Boundary Remote Position	B	Remote Position Indication, Exercise/ 2 Years Exercise Full Stroke /Cold Shutdown Operability Test	2
SIS-MOV-101A	Accumulator discharge valve	Remote	Maintain Open Transfer Open Transfer Close	Active Remote Position	B	Remote Position Indication, Exercise/ 2 Years Exercise Full Stroke /Hot Shutdown Operability Test	13
SIS-MOV-101B	Accumulator discharge valve	Remote	Maintain Open Transfer Open Transfer Close	Active Remote Position	B	Remote Position Indication, Exercise/ 2 Years Exercise Full Stroke /Hot Shutdown Operability Test	13
SIS-MOV-101C	Accumulator discharge valve	Remote	Maintain Open Transfer Open Transfer Close	Active Remote Position	B	Remote Position Indication, Exercise/ 2 Years Exercise Full Stroke /Hot Shutdown Operability Test	13

Table 3.9-14 Valve Inservice Test Requirements (Sheet 32 of 138)

Valve Tag Number	Description	Valve Type	Safety-Related Missions	Safety Functions(2)	ASME IST Category	Inservice Testing Type and Frequency	IST Notes
SIS-MOV-101D	Accumulator discharge valve	Remote	Maintain Open Transfer Open Transfer Close	Active Remote Position	B	Remote Position Indication, Exercise/ 2 Years Exercise Full Stroke /Hot Shutdown Operability Test	13
SIS-VLV-102A	Accumulator injection line check	Check	Maintain Close Transfer Open	Active RCS Pressure Boundary Safety Seat Leakage	AC	Check Exercise (Alternative method) /Refueling Outage Pressure Isolation Leak Test/ Refueling Outage	12
SIS-VLV-103A	Accumulator injection line check	Check	Maintain Close Transfer Open	Active RCS Pressure Boundary Safety Seat Leakage	AC	Check Exercise (Alternative method) /Refueling Outage Pressure Isolation Leak Test/ Refueling Outage	12

Table 3.9-14 Valve Inservice Test Requirements (Sheet 33 of 138)

Valve Tag Number	Description	Valve Type	Safety-Related Missions	Safety Functions(2)	ASME IST Category	Inservice Testing Type and Frequency	IST Notes
SIS-VLV-102B	Accumulator injection line check	Check	Maintain Close Transfer Open	Active RCS Pressure Boundary Safety Seat Leakage	AC	Check Exercise (Alternative method) /Refueling Outage Pressure Isolation Leak Test/ Refueling Outage	12
SIS-VLV-103B	Accumulator injection line check	Check	Maintain Close Transfer Open	Active RCS Pressure Boundary Safety Seat Leakage	AC	Check Exercise (Alternative method) /Refueling Outage Pressure Isolation Leak Test/ Refueling Outage	12
SIS-VLV-102C	Accumulator injection line check	Check	Maintain Close Transfer Open	Active RCS Pressure Boundary Safety Seat Leakage	AC	Check Exercise (Alternative method) /Refueling Outage Pressure Isolation Leak Test/ Refueling Outage	12
SIS-VLV-103C	Accumulator injection line check	Check	Maintain Close Transfer Open	Active RCS Pressure Boundary Safety Seat Leakage	AC	Check Exercise (Alternative method) /Refueling Outage Pressure Isolation Leak Test/ Refueling Outage	12

Table 3.9-14 Valve Inservice Test Requirements (Sheet 34 of 138)

Valve Tag Number	Description	Valve Type	Safety-Related Missions	Safety Functions(2)	ASME IST Category	Inservice Testing Type and Frequency	IST Notes
SIS-VLV-102D	Accumulator injection line check	Check	Maintain Close Transfer Open	Active RCS Pressure Boundary Safety Seat Leakage	AC	Check Exercise (Alternative method) /Refueling Outage Pressure Isolation Leak Test/ Refueling Outage	12
SIS-VLV-103D	Accumulator injection line check	Check	Maintain Close Transfer Open	Active RCS Pressure Boundary Safety Seat Leakage	AC	Check Exercise (Alternative method) /Refueling Outage Pressure Isolation Leak Test/ Refueling Outage	12
SIS-AOV-114	Accumulator nitrogen supply containment isolation	Remote	Maintain Close Transfer Close	Active-to-Fail Containment Isolation Safety Seat Leakage Remote Position	A	Remote Position Indication Exercise/2 years Containment Isolation Leak Test Exercise Full Stroke /Cold Shutdown Operability Test	5 6
SIS-VLV-115	Accumulator nitrogen supply containment isolation check	Check	Maintain Close Transfer Close	Active Containment Isolation Safety Seat Leakage	AC	Containment Isolation Leak Test Check Exercise/ Refueling Outage	5 3

Table 3.9-14 Valve Inservice Test Requirements (Sheet 35 of 138)

Valve Tag Number	Description	Valve Type	Safety-Related Missions	Safety Functions(2)	ASME IST Category	Inservice Testing Type and Frequency	IST Notes
SIS-VLV-116	Accumulator nitrogen supply header safety valve	Relief	Maintain Close Transfer Open Transfer Close	Active	BC	Class 2/3 Relief Valve Tests/10 Years and 20% in 4 Years	
SIS-MOV-121A	Accumulator nitrogen discharge valve	Remote	Transfer Open	Active Remote Position	B	Remote Position Indication, Exercise/ 2 Years Exercise Full Stroke /Quarterly Operability Test	
SIS-MOV-121B	Accumulator nitrogen discharge valve	Remote	Transfer Open	Active Remote Position	B	Remote Position Indication, Exercise/ 2 Years Exercise Full Stroke /Quarterly Operability Test	
SIS-MOV-125A	Accumulator nitrogen supply line isolation	Remote	Maintain Close Transfer Open	Active Remote Position	B	Remote Position Indication, Exercise/ 2 Years Exercise Full Stroke /Cold Shutdown Operability Test	9

Table 3.9-14 Valve Inservice Test Requirements (Sheet 36 of 138)

Valve Tag Number	Description	Valve Type	Safety-Related Missions	Safety Functions(2)	ASME IST Category	Inservice Testing Type and Frequency	IST Notes
SIS-MOV-125B	Accumulator nitrogen supply line isolation	Remote	Maintain Close Transfer Open	Active Remote Position	B	Remote Position Indication, Exercise/ 2 Years Exercise Full Stroke /Cold Shutdown Operability Test	9
SIS-MOV-125C	Accumulator nitrogen supply line isolation	Remote	Maintain Close Transfer Open	Active Remote Position	B	Remote Position Indication, Exercise/ 2 Years Exercise Full Stroke /Cold Shutdown Operability Test	9
SIS-MOV-125D	Accumulator nitrogen supply line isolation	Remote	Maintain Close Transfer Open	Active Remote Position	B	Remote Position Indication, Exercise/ 2 Years Exercise Full Stroke /Cold Shutdown Operability Test	9
SIS-VLV-126A	Accumulator safety valve	Relief	Maintain Close Transfer Open Transfer Close	Active	BC	Class 2/3 Relief Valve Tests/10 Years and 20% in 4 Years	
SIS-VLV-126B	Accumulator safety valve	Relief	Maintain Close Transfer Open Transfer Close	Active	BC	Class 2/3 Relief Valve Tests/10 Years and 20% in 4 Years	

Table 3.9-14 Valve Inservice Test Requirements (Sheet 37 of 138)

Valve Tag Number	Description	Valve Type	Safety-Related Missions	Safety Functions(2)	ASME IST Category	Inservice Testing Type and Frequency	IST Notes
SIS-VLV-126C	Accumulator safety valve	Relief	Maintain Close Transfer Open Transfer Close	Active	BC	Class 2/3 Relief Valve Tests/10 Years and 20% in 4 Years	
SIS-VLV-126D	Accumulator safety valve	Relief	Maintain Close Transfer Open Transfer Close	Active	BC	Class 2/3 Relief Valve Tests/10 Years and 20% in 4 Years	
RHS-MOV-001A	Containment spray/residual heat removal pump hot leg isolation – Inner	Remote	Maintain Close Transfer Close Transfer Open	Active RCS Pressure Boundary Safety Seat Leakage Remote Position	A	Remote Position Indication, Exercise/ 2 Years Exercise Full Stroke/Cold Shutdown Pressure Isolation Leak Test/ Refueling Outage Operability Test	8
RHS-MOV-002A	Containment spray/residual heat removal pump hot leg isolation – Outer	Remote	Maintain Close Transfer Close Transfer Open	Active RCS Pressure Boundary Containment Isolation Safety Seat Leakage Remote Position	A	Remote Position Indication, Exercise/ 2 Years Exercise Full Stroke/Cold Shutdown Pressure Isolation Leak Test/ Refueling Outage Operability Test	8 10

Table 3.9-14 Valve Inservice Test Requirements (Sheet 38 of 138)

Valve Tag Number	Description	Valve Type	Safety-Related Missions	Safety Functions(2)	ASME IST Category	Inservice Testing Type and Frequency	IST Notes
RHS-MOV-001B	Containment spray/residual heat removal pump hot leg isolation - Inner	Remote	Maintain Close Transfer Close Transfer Open	Active RCS Pressure Boundary Safety Seat Leakage Remote Position	A	Remote Position Indication, Exercise/ 2 Years Exercise Full Stroke/Cold Shutdown Pressure Isolation Leak Test/ Refueling Outage Operability Test	8
RHS-MOV-002B	Containment spray/residual heat removal pump hot leg isolation - outer	Remote	Maintain Close Transfer Close Transfer Open	Active RCS Pressure Boundary Containment Isolation Safety Seat Leakage Remote Position	A	Remote Position Indication, Exercise/ 2 Years Exercise Full Stroke/Cold Shutdown Pressure Isolation Leak Test/ Refueling Outage Operability Test	8 10

Table 3.9-14 Valve Inservice Test Requirements (Sheet 39 of 138)

Valve Tag Number	Description	Valve Type	Safety-Related Missions	Safety Functions(2)	ASME IST Category	Inservice Testing Type and Frequency	IST Notes
RHS-MOV-001C	Containment spray/residual heat removal pump hot leg isolation – inner	Remote	Maintain Close Transfer Close Transfer Open	Active RCS Pressure Boundary Safety Seat Leakage Remote Position	A	Remote Position Indication, Exercise/ 2 Years Exercise Full Stroke/Cold Shutdown Pressure Isolation Leak Test/ Refueling Outage Operability Test	8
RHS-MOV-002C	Containment spray/residual heat removal pump hot leg isolation – outer	Remote	Maintain Close Transfer Close Transfer Open	Active RCS Pressure Boundary Containment Isolation Safety Seat Leakage Remote Position	A	Remote Position Indication, Exercise/ 2 Years Exercise Full Stroke/Cold Shutdown Pressure Isolation Leak Test/ Refueling Outage Operability Test	8 10

Table 3.9-14 Valve Inservice Test Requirements (Sheet 40 of 138)

Valve Tag Number	Description	Valve Type	Safety-Related Missions	Safety Functions(2)	ASME IST Category	Inservice Testing Type and Frequency	IST Notes
RHS-MOV-001D	Containment spray/residual heat removal pump hot leg isolation – inner	Remote	Maintain Close Transfer Close Transfer Open	Active RCS Pressure Boundary Safety Seat Leakage Remote Position	A	Remote Position Indication, Exercise/ 2 Years Exercise Full Stroke/Cold Shutdown Pressure Isolation Leak Test/ Refueling Outage Operability Test	8
RHS-MOV-002D	Containment spray/residual heat removal pump hot leg isolation – outer	Remote	Maintain Close Transfer Close Transfer Open	Active RCS Pressure Boundary Containment Isolation Safety Seat Leakage Remote Position	A	Remote Position Indication, Exercise/ 2 Years Exercise Full Stroke/Cold Shutdown Pressure Isolation Leak Test/ Refueling Outage Operability Test	8 10
RHS-VLV-003A	Containment spray/residual heat removal pump suction relief	Relief	Maintain Close Transfer Open Transfer Close	Active Containment Isolation	BC	Class 2/3 Relief Valve Tests/10 Years and 20% in 4 Years	10

Table 3.9-14 Valve Inservice Test Requirements (Sheet 41 of 138)

Valve Tag Number	Description	Valve Type	Safety-Related Missions	Safety Functions(2)	ASME IST Category	Inservice Testing Type and Frequency	IST Notes
RHS-VLV-003B	Containment spray/residual heat removal pump suction relief	Relief	Maintain Close Transfer Open Transfer Close	Active Containment Isolation	BC	Class 2/3 Relief Valve Tests/10 Years and 20% in 4 Years	10
RHS-VLV-003C	Containment spray/residual heat removal pump suction relief	Relief	Maintain Close Transfer Open Transfer Close	Active Containment Isolation	BC	Class 2/3 Relief Valve Tests/10 Years and 20% in 4 Years	10
RHS-VLV-003D	Containment spray/residual heat removal pump suction relief	Relief	Maintain Close Transfer Open Transfer Close	Active Containment Isolation	BC	Class 2/3 Relief Valve Tests/10 Years and 20% in 4 Years	10
RHS-MOV-021A	Containment spray/residual heat removal pump discharge line containment isolation	Remote	Maintain Close Transfer Close Transfer Open	Active Containment Isolation Remote Position	B	Remote Position Indication, Exercise/ 2 Years Exercise Full Stroke/Quarterly Operability Test	10

Table 3.9-14 Valve Inservice Test Requirements (Sheet 42 of 138)

Valve Tag Number	Description	Valve Type	Safety-Related Missions	Safety Functions(2)	ASME IST Category	Inservice Testing Type and Frequency	IST Notes
RHS-MOV-021B	Containment spray/residual heat removal pump discharge line containment isolation	Remote	Maintain Close Transfer Close Transfer Open	Active Containment Isolation Remote Position	B	Remote Position Indication, Exercise/ 2 Years Exercise Full Stroke/Quarterly Operability Test	10
RHS-MOV-021C	Containment spray/residual heat removal pump discharge line containment isolation	Remote	Maintain Close Transfer Close Transfer Open	Active Containment Isolation Remote Position	B	Remote Position Indication, Exercise/ 2 Years Exercise Full Stroke/Quarterly Operability Test	10
RHS-MOV-021D	Containment spray/residual heat removal pump discharge line containment isolation	Remote	Maintain Close Transfer Close Transfer Open	Active Containment Isolation Remote Position	B	Remote Position Indication, Exercise/ 2 Years Exercise Full Stroke/Quarterly Operability Test	10
RHS-VLV-022A	Containment spray/residual heat removal pump discharge line containment isolation check	Check	Maintain Close Transfer Open Transfer Close	Active Containment Isolation	BC	Check Exercise/ Refueling Outage	3 10

Table 3.9-14 Valve Inservice Test Requirements (Sheet 43 of 138)

Valve Tag Number	Description	Valve Type	Safety-Related Missions	Safety Functions(2)	ASME IST Category	Inservice Testing Type and Frequency	IST Notes
RHS-VLV-022B	Containment spray/residual heat removal pump discharge line containment isolation check	Check	Maintain Close Transfer Open Transfer Close	Active Containment Isolation	BC	Check Exercise/ Refueling Outage	3 10
RHS-VLV-022C	Containment spray/residual heat removal pump discharge line containment isolation check	Check	Maintain Close Transfer Open Transfer Close	Active Containment Isolation	BC	Check Exercise/ Refueling Outage	3 10
RHS-VLV-022D	Containment spray/residual heat removal pump discharge line containment isolation check	Check	Maintain Close Transfer Open Transfer Close	Active Containment Isolation	BC	Check Exercise/ Refueling Outage	3 10
RHS-VLV-023A	Containment spray/residual heat removal heat exchanger outlet relief	Relief	Maintain Close Transfer Open Transfer Close	Active	BC	Class 2/3 Relief Valve Tests/10 Years and 20% in 4 Years	

Table 3.9-14 Valve Inservice Test Requirements (Sheet 44 of 138)

Valve Tag Number	Description	Valve Type	Safety-Related Missions	Safety Functions(2)	ASME IST Category	Inservice Testing Type and Frequency	IST Notes
RHS-VLV-023B	Containment spray/residual heat removal heat exchanger outlet relief	Relief	Maintain Close Transfer Open Transfer Close	Active	BC	Class 2/3 Relief Valve Tests/10 Years and 20% in 4 Years	
RHS-VLV-023C	Containment spray/residual heat removal heat exchanger outlet relief	Relief	Maintain Close Transfer Open Transfer Close	Active	BC	Class 2/3 Relief Valve Tests/10 Years and 20% in 4 Years	
RHS-VLV-023D	Containment spray/residual heat removal heat exchanger outlet relief	Relief	Maintain Close Transfer Open Transfer Close	Active	BC	Class 2/3 Relief Valve Tests/10 Years and 20% in 4 Years	
RHS-MOV-025A	Containment spray/residual heat removal pump full-flow test line stop	Remote	Maintain Close Transfer Open	Active Remote Position	B	Remote Position Indication, Exercise/ 2 Years Exercise Full Stroke/Quarterly Operability Test	

Table 3.9-14 Valve Inservice Test Requirements (Sheet 45 of 138)

Valve Tag Number	Description	Valve Type	Safety-Related Missions	Safety Functions(2)	ASME IST Category	Inservice Testing Type and Frequency	IST Notes
RHS-MOV-025B	Containment spray/residual heat removal pump full-flow test line stop	Remote	Maintain Close Transfer Open	Active Remote Position	B	Remote Position Indication, Exercise/ 2 Years Exercise Full Stroke/Quarterly Operability Test	
RHS-MOV-025C	Containment spray/residual heat removal pump full-flow test line stop	Remote	Maintain Close Transfer Open	Active Remote Position	B	Remote Position Indication, Exercise/ 2 Years Exercise Full Stroke/Quarterly Operability Test	
RHS-MOV-025D	Containment spray/residual heat removal pump full-flow test line stop	Remote	Maintain Close Transfer Open	Active Remote Position	B	Remote Position Indication, Exercise/ 2 Years Exercise Full Stroke/Quarterly Operability Test	
RHS-MOV-026A	Residual heat removal flow control	Remote	Maintain Close Transfer Open	Active Remote Position	B	Remote Position Indication, Exercise/ 2 Years Exercise Full Stroke/Cold Shutdown Operability Test	8

Table 3.9-14 Valve Inservice Test Requirements (Sheet 46 of 138)

Valve Tag Number	Description	Valve Type	Safety-Related Missions	Safety Functions(2)	ASME IST Category	Inservice Testing Type and Frequency	IST Notes
RHS-MOV-026B	Residual heat removal flow control	Remote	Maintain Close Transfer Open	Active Remote Position	B	Remote Position Indication, Exercise/ 2 Years Exercise Full Stroke/Cold Shutdown Operability Test	8
RHS-MOV-026C	Residual heat removal flow control	Remote	Maintain Close Transfer Open	Active Remote Position	B	Remote Position Indication, Exercise/ 2 Years Exercise Full Stroke/Cold Shutdown Operability Test	8
RHS-MOV-026D	Residual heat removal flow control	Remote	Maintain Close Transfer Open	Active Remote Position	B	Remote Position Indication, Exercise/ 2 Years Exercise Full Stroke/Cold Shutdown Operability Test	8
RHS-VLV-027A	Residual heat removal(RHR) discharge line check	Check	Maintain Close Transfer Open	Active RCS Pressure Boundary Safety Seat Leakage	AC	Check Exercise/Refueling Outage Pressure Isolation Leak Test/ Refueling Outage	3

Table 3.9-14 Valve Inservice Test Requirements (Sheet 47 of 138)

Valve Tag Number	Description	Valve Type	Safety-Related Missions	Safety Functions(2)	ASME IST Category	Inservice Testing Type and Frequency	IST Notes
RHS-VLV-027B	RHR discharge line check	Check	Maintain Close Transfer Open	Active RCS Pressure Boundary Safety Seat Leakage	AC	Check Exercise/Refueling Outage Pressure Isolation Leak Test/ Refueling Outage	3
RHS-VLV-027C	RHR discharge line check	Check	Maintain Close Transfer Open	Active RCS Pressure Boundary Safety Seat Leakage	AC	Check Exercise/Refueling Outage Pressure Isolation Leak Test/ Refueling Outage	3
RHS-VLV-027D	RHR discharge line check	Check	Maintain Close Maintain Open	Active RCS Pressure Boundary Safety Seat Leakage	AC	Check Exercise/Refueling Outage Pressure Isolation Leak Test/ Refueling Outage	3
RHS-VLV-028A	RHR discharge line check	Check	Maintain Close Transfer Open	Active RCS Pressure Boundary Safety Seat Leakage	AC	Check Exercise/Refueling Outage Pressure Isolation Leak Test/ Refueling Outage	3

Table 3.9-14 Valve Inservice Test Requirements (Sheet 48 of 138)

Valve Tag Number	Description	Valve Type	Safety-Related Missions	Safety Functions(2)	ASME IST Category	Inservice Testing Type and Frequency	IST Notes
RHS-VLV-028B	RHR discharge line check	Check	Maintain Close Transfer Open	Active RCS Pressure Boundary Safety Seat Leakage	AC	Check Exercise/Refueling Outage Pressure Isolation Leak Test/ Refueling Outage	3
RHS-VLV-028C	RHR discharge line check	Check	Maintain Close Transfer Open	Active RCS Pressure Boundary Safety Seat Leakage	AC	Check Exercise/Refueling Outage Pressure Isolation Leak Test/ Refueling Outage	3
RHS-VLV-028D	RHR discharge line check	Check	Maintain Close Transfer Open	Active RCS Pressure Boundary Safety Seat Leakage	AC	Check Exercise/Refueling Outage Pressure Isolation Leak Test/ Refueling Outage	3
RHS-VLV-004A	Containment spray/residual heat removal pump suction line check	Check	Maintain Close Transfer Open	Active	BC	Check Exercise/ Refueling Outage	3

Table 3.9-14 Valve Inservice Test Requirements (Sheet 49 of 138)

Valve Tag Number	Description	Valve Type	Safety-Related Missions	Safety Functions(2)	ASME IST Category	Inservice Testing Type and Frequency	IST Notes
RHS-VLV-004B	Containment spray/residual heat removal pump suction line check	Check	Maintain Close Transfer Open	Active	BC	Check Exercise/ Refueling Outage	3
RHS-VLV-004C	Containment spray/residual heat removal pump suction line check	Check	Maintain Close Transfer Open	Active	BC	Check Exercise/ Refueling Outage	3
RHS-VLV-004D	Containment spray/residual heat removal pump suction line check	Check	Maintain Close Transfer Open	Active	BC	Check Exercise/ Refueling Outage	3
EFS-MOV-019A	Emergency feed water isolation	Remote	Maintain Open Transfer Open Transfer Close Maintain Close	Active Containment Isolation Safety Seat Leakage Remote Position	B	Remote Position Indication, Exercise/ 2 Years Exercise Full Stroke/Quarterly Operability Test	

Table 3.9-14 Valve Inservice Test Requirements (Sheet 50 of 138)

Valve Tag Number	Description	Valve Type	Safety-Related Missions	Safety Functions(2)	ASME IST Category	Inservice Testing Type and Frequency	IST Notes
EFS-MOV-019B	Emergency feed water isolation	Remote	Maintain Open Transfer Open Transfer Close Maintain Close	Active Containment Isolation Safety Seat Leakage Remote Position	B	Remote Position Indication, Exercise/ 2 Years Exercise Full Stroke/Quarterly Operability Test	
EFS-MOV-019C	Emergency feed water isolation	Remote	Maintain Open Transfer Open Transfer Close Maintain Close	Active Containment Isolation Safety Seat Leakage Remote Position	B	Remote Position Indication, Exercise/ 2 Years Exercise Full Stroke/Quarterly Operability Test	
EFS-MOV-019D	Emergency feed water isolation	Remote	Maintain Open Transfer Open Transfer Close Maintain Close	Active Containment Isolation Safety Seat Leakage Remote Position	B	Remote Position Indication, Exercise/ 2 Years Exercise Full Stroke/Quarterly Operability Test	
EFS-MOV-017A	Emergency feed water control	Remote	Maintain Open Transfer Open Transfer Close	Active Remote Position	B	Remote Position Indication, Exercise/ 2 Years Exercise Full Stroke/Quarterly Operability Test	

Table 3.9-14 Valve Inservice Test Requirements (Sheet 51 of 138)

Valve Tag Number	Description	Valve Type	Safety-Related Missions	Safety Functions(2)	ASME IST Category	Inservice Testing Type and Frequency	IST Notes
EFS-MOV-017B	Emergency feed water control	Remote	Maintain Open Transfer Open Transfer Close	Active Remote Position	B	Remote Position Indication, Exercise/ 2 Years Exercise Full Stroke/Quarterly Operability Test	
EFS-MOV-017C	Emergency feed water control	Remote	Maintain Open Transfer Open Transfer Close	Active Remote Position	B	Remote Position Indication, Exercise/ 2 Years Exercise Full Stroke/Quarterly Operability Test	
EFS-MOV-017D	Emergency feed water control	Remote	Maintain Open Transfer Open Transfer Close	Active Remote Position	B	Remote Position Indication, Exercise/ 2 Years Exercise Full Stroke/Quarterly Operability Test	
EFS-MOV-103A	Turbine driven emergency feed water pump steam inlet	Remote	Maintain Close Transfer Open Transfer Close	Active Remote Position	B	Remote Position Indication, Exercise/ 2 Years Exercise Full Stroke/Quarterly Operability Test	

Table 3.9-14 Valve Inservice Test Requirements (Sheet 52 of 138)

Valve Tag Number	Description	Valve Type	Safety-Related Missions	Safety Functions(2)	ASME IST Category	Inservice Testing Type and Frequency	IST Notes
EFS-MOV-103B	Turbine driven emergency feed water pump steam inlet	Remote	Maintain Close Transfer Open Transfer Close	Active Remote Position	B	Remote Position Indication, Exercise/ 2 Years Exercise Full Stroke/Quarterly Operability Test	
EFS-MOV-101A	Turbine driven emergency feed water pump steam supply line isolation	Remote	Maintain Open Maintain Close Transfer Close	Active Containment Isolation Safety Seat Leakage Remote Position	B	Remote Position Indication, Exercise/ 2 Years Exercise Full Stroke/Quarterly Operability Test	
EFS-MOV-101B	Turbine driven emergency feed water pump steam supply line isolation	Remote	Maintain Open Maintain Close Transfer Close	Active Containment Isolation Safety Seat Leakage Remote Position	B	Remote Position Indication, Exercise/ 2 Years Exercise Full Stroke/Quarterly Operability Test	
EFS-MOV-101C	Turbine driven emergency feed water pump steam supply line isolation	Remote	Maintain Open Maintain Close Transfer Close	Active Containment Isolation Safety Seat Leakage Remote Position	B	Remote Position Indication, Exercise/ 2 Years Exercise Full Stroke/Quarterly Operability Test	

Table 3.9-14 Valve Inservice Test Requirements (Sheet 53 of 138)

Valve Tag Number	Description	Valve Type	Safety-Related Missions	Safety Functions(2)	ASME IST Category	Inservice Testing Type and Frequency	IST Notes
EFS-MOV-101D	Turbine driven emergency feed water pump steam supply line isolation	Remote	Maintain Open Maintain Close Transfer Close	Active Containment Isolation Safety Seat Leakage Remote Position	B	Remote Position Indication, Exercise/ 2 Years Exercise Full Stroke/Quarterly Operability Test	
EFS-VLV-008A	Emergency feed water pit outlet check	Check	Transfer Open Transfer Close	Active	BC	Check Exercise/ Refueling Outage	3
EFS-VLV-008B	Emergency feed water pit outlet check	Check	Transfer Open Transfer Close	Active	BC	Check Exercise/ Refueling Outage	3
EFS-VLV-012A	Emergency feed water pump discharge check	Check	Transfer Open Transfer Close	Active	BC	Check Exercise/ Refueling Outage	3
EFS-VLV-012B	Emergency feed water pump discharge check	Check	Transfer Open Transfer Close	Active	BC	Check Exercise/ Refueling Outage	3
EFS-VLV-012C	Emergency feed water pump discharge check	Check	Transfer Open Transfer Close	Active	BC	Check Exercise/ Refueling Outage	3
EFS-VLV-012D	Emergency feed water pump discharge check	Check	Transfer Open Transfer Close	Active	BC	Check Exercise/ Refueling Outage	3

Table 3.9-14 Valve Inservice Test Requirements (Sheet 54 of 138)

Valve Tag Number	Description	Valve Type	Safety-Related Missions	Safety Functions(2)	ASME IST Category	Inservice Testing Type and Frequency	IST Notes
EFS-VLV-020A	Emergency feed water pump minimum flow line check	Check	Transfer Open Transfer Close	Active	BC	Check Exercise/ Refueling Outage	3
EFS-VLV-020B	Emergency feed water pump minimum flow line check	Check	Transfer Open Transfer Close	Active	BC	Check Exercise/ Refueling Outage	3
EFS-VLV-020C	Emergency feed water pump minimum flow line check	Check	Transfer Open Transfer Close	Active	BC	Check Exercise/ Refueling Outage	3
EFS-VLV-020D	Emergency feed water pump minimum flow line check	Check	Transfer Open Transfer Close	Active	BC	Check Exercise/ Refueling Outage	3
EFS-VLV-018A	Emergency feed water feeding line check	Check	Transfer Open Transfer Close	Active	BC	Check Exercise/ Refueling Outage	3
EFS-VLV-018B	Emergency feed water feeding line check	Check	Transfer Open Transfer Close	Active	BC	Check Exercise/ Refueling Outage	3

Table 3.9-14 Valve Inservice Test Requirements (Sheet 55 of 138)

Valve Tag Number	Description	Valve Type	Safety-Related Missions	Safety Functions(2)	ASME IST Category	Inservice Testing Type and Frequency	IST Notes
EFS-VLV-018C	Emergency feed water feeding line check	Check	Transfer Open Transfer Close	Active	BC	Check Exercise/ Refueling Outage	3
EFS-VLV-018D	Emergency feed water feeding line check	Check	Transfer Open Transfer Close	Active	BC	Check Exercise/ Refueling Outage	3
EFS-VLV-102A	Emergency feed water pump steam feeding line check	Check	Transfer Open Transfer Close	Active	BC	Check Exercise/ Refueling Outage	3
EFS-VLV-102B	Emergency feed water pump steam feeding line check	Check	Transfer Open Transfer Close	Active	BC	Check Exercise/ Refueling Outage	3
EFS-VLV-102C	Emergency feed water pump steam feeding line check	Check	Transfer Open Transfer Close	Active	BC	Check Exercise/ Refueling Outage	3
EFS-VLV-102D	Emergency feed water pump steam feeding line check	Check	Transfer Open Transfer Close	Active	BC	Check Exercise/ Refueling Outage	3

Table 3.9-14 Valve Inservice Test Requirements (Sheet 56 of 138)

Valve Tag Number	Description	Valve Type	Safety-Related Missions	Safety Functions(2)	ASME IST Category	Inservice Testing Type and Frequency	IST Notes
EFS-VLV-109A	Turbine driven emergency feedwater pump steam supply drain line check	Check	Transfer Open Transfer Close	Active	BC	Check Exercise/ Refueling Outage	12
EFS-VLV-109D	Turbine driven emergency feedwater pump steam supply drain line check	Check	Transfer Open Transfer Close	Active	BC	Check Exercise/ Refueling Outage	12
(Deleted)							
(Deleted)							
(Deleted)							

Table 3.9-14 Valve Inservice Test Requirements (Sheet 57 of 138)

Valve Tag Number	Description	Valve Type	Safety-Related Missions	Safety Functions(2)	ASME IST Category	Inservice Testing Type and Frequency	IST Notes
(Deleted)							
NFS-VLV-512A	Main feed water isolation	Remote	Maintain Close Transfer Close	Active Active-to-Fail Containment Isolation Remote Position	B	Remote Position Indication, Exercise/2 Years Exercise Full Stroke/Cold Shutdown Operability Test	11

Table 3.9-14 Valve Inservice Test Requirements (Sheet 58 of 138)

Valve Tag Number	Description	Valve Type	Safety-Related Missions	Safety Functions(2)	ASME IST Category	Inservice Testing Type and Frequency	IST Notes
NFS-VLV-512B	Main feed water isolation	Remote	Maintain Close Transfer Close	Active Active-to-Fail Containment Isolation Remote Position	B	Remote Position Indication, Exercise/2 Years Exercise Full Stroke/Cold Shutdown Operability Test	11
NFS-VLV-512C	Main feed water isolation	Remote	Maintain Close Transfer Close	Active Active-to-Fail Containment Isolation Remote Position	B	Remote Position Indication, Exercise/2 Years Exercise Full Stroke/Cold Shutdown Operability Test	11

Table 3.9-14 Valve Inservice Test Requirements (Sheet 59 of 138)

Valve Tag Number	Description	Valve Type	Safety-Related Missions	Safety Functions(2)	ASME IST Category	Inservice Testing Type and Frequency	IST Notes
NFS-VLV-512D	Main feed water isolation	Remote	Maintain Close Transfer Close	Active Active-to-Fail Containment Isolation Remote Position	B	Remote Position Indication, Exercise/2 Years Exercise Full Stroke/Cold Shutdown Operability Test	11
(Deleted)							
(Deleted)							

Table 3.9-14 Valve Inservice Test Requirements (Sheet 60 of 138)

Valve Tag Number	Description	Valve Type	Safety-Related Missions	Safety Functions(2)	ASME IST Category	Inservice Testing Type and Frequency	IST Notes
(Deleted)							
(Deleted)							
NMS-MOV-507A	Main steam relief valve block	Remote	Maintain Close Transfer Close Transfer Open	Active Containment Isolation Remote Position	B	Remote Position Indication, Exercise/2 Years Exercise Full Stroke/ Quarterly Operability Test	
NMS-MOV-507B	Main steam relief valve block	Remote	Maintain Close Transfer Close Transfer Open	Active Containment Isolation Remote Position	B	Remote Position Indication, Exercise/2 Years Exercise Full Stroke/ Quarterly Operability Test	

Table 3.9-14 Valve Inservice Test Requirements (Sheet 61 of 138)

Valve Tag Number	Description	Valve Type	Safety-Related Missions	Safety Functions(2)	ASME IST Category	Inservice Testing Type and Frequency	IST Notes
NMS-MOV-507C	Main steam relief valve block	Remote	Maintain Close Transfer Close Transfer Open	Active Containment Isolation Remote Position	B	Remote Position Indication, Exercise/2 Years Exercise Full Stroke/ Quarterly Operability Test	
NMS-MOV-507D	Main steam relief valve block	Remote	Maintain Close Transfer Close Transfer Open	Active Containment Isolation Remote Position	B	Remote Position Indication, Exercise/2 Years Exercise Full Stroke/ Quarterly Operability Test	
NMS-MOV-508A	Main steam depressurization valve	Remote	Transfer Open Transfer Close	Active Remote Position	B	Remote Position Indication, Exercise/2 Years Exercise Full Stroke/ Cold Shutdown Operability Test	4
NMS-MOV-508B	Main steam depressurization valve	Remote	Transfer Open Transfer Close	Active Remote Position	B	Remote Position Indication, Exercise/2 Years Exercise Full Stroke/ Cold Shutdown Operability Test	4

Table 3.9-14 Valve Inservice Test Requirements (Sheet 62 of 138)

Valve Tag Number	Description	Valve Type	Safety-Related Missions	Safety Functions(2)	ASME IST Category	Inservice Testing Type and Frequency	IST Notes
NMS-MOV-508C	Main steam depressurization valve	Remote	Transfer Open Transfer Close	Active Remote Position	B	Remote Position Indication, Exercise/2 Years Exercise Full Stroke/ Cold Shutdown Operability Test	4
NMS-MOV-508D	Main steam depressurization valve	Remote	Transfer Open Transfer Close	Active Remote Position	B	Remote Position Indication, Exercise/2 Years Exercise Full Stroke/ Cold Shutdown Operability Test	4
NMS-AOV-515A	Main steam isolation	Remote	Maintain Close Transfer Close	Active-to-Fail Containment Isolation Remote Position	B	Remote Position Indication, Exercise/2 Years Exercise Full Stroke/Cold Shutdown Operability Test	11

Table 3.9-14 Valve Inservice Test Requirements (Sheet 63 of 138)

Valve Tag Number	Description	Valve Type	Safety-Related Missions	Safety Functions(2)	ASME IST Category	Inservice Testing Type and Frequency	IST Notes
NMS-AOV-515B	Main steam isolation	Remote	Maintain Close Transfer Close	Active-to-Fail Containment Isolation Remote Position	B	Remote Position Indication, Exercise/2 Years Exercise Full Stroke/Cold Shutdown Operability Test	11
NMS-AOV-515C	Main steam isolation	Remote	Maintain Close Transfer Close	Active-to-Fail Containment Isolation Remote Position	B	Remote Position Indication, Exercise/2 Years Exercise Full Stroke/Cold Shutdown Operability Test	11

Table 3.9-14 Valve Inservice Test Requirements (Sheet 64 of 138)

Valve Tag Number	Description	Valve Type	Safety-Related Missions	Safety Functions(2)	ASME IST Category	Inservice Testing Type and Frequency	IST Notes
NMS-AOV-515D	Main steam isolation	Remote	Maintain Close Transfer Close	Active-to-Fail Containment Isolation Remote Position	B	Remote Position Indication, Exercise/2 Years Exercise Full Stroke/Cold Shutdown Operability Test	11
NMS-HCV-3615	Main steam bypass isolation	Remote	Maintain Close Transfer Close	Active-To-Fail Containment Isolation Remote Position	B	Remote Position Indication, Exercise/2 Years Exercise Full Stroke/Cold Shutdown Operability Test	4
NMS-HCV-3625	Main steam bypass isolation valve	Remote	Maintain Close Transfer Close	Active-To-Fail Containment Isolation Remote Position	B	Remote Position Indication, Exercise/2 Years Exercise Full Stroke/Cold Shutdown Operability Test	4
NMS-HCV-3635	Main steam bypass isolation	Remote	Maintain Close Transfer Close	Active-To-Fail Containment Isolation Remote Position	B	Remote Position Indication, Exercise/2 Years Exercise Full Stroke/Cold Shutdown Operability Test	4

Table 3.9-14 Valve Inservice Test Requirements (Sheet 65 of 138)

Valve Tag Number	Description	Valve Type	Safety-Related Missions	Safety Functions(2)	ASME IST Category	Inservice Testing Type and Frequency	IST Notes
NMS-HCV-3645	Main steam bypass isolation	Remote	Maintain Close Transfer Close	Active-To-Fail Containment Isolation Remote Position	B	Remote Position Indication, Exercise/2 Years Exercise Full Stroke/ Cold Shutdown Operability Test	4
NMS-VLV-509A	Main steam safety valve	Relief	Maintain Close Transfer Open Transfer Close	Active Containment Isolation Remote Position	BC	Remote Position Indication, Alternate/2 Years Class 2/3 Relief Valve Tests/5 Years and 20% in 2 Years	1
NMS-VLV-510A	Main steam safety valve	Relief	Maintain Close Transfer Open Transfer Close	Active Containment Isolation Remote Position	BC	Remote Position Indication, Alternate/2 Years Class 2/3 Relief Valve Tests/5 Years and 20% in 2 Years	1
NMS-VLV-511A	Main steam safety valve	Relief	Maintain Close Transfer Open Transfer Close	Active Containment Isolation Remote Position	BC	Remote Position Indication, Alternate/2 Years Class 2/3 Relief Valve Tests/5 Years and 20% in 2 Years	1

Table 3.9-14 Valve Inservice Test Requirements (Sheet 66 of 138)

Valve Tag Number	Description	Valve Type	Safety-Related Missions	Safety Functions(2)	ASME IST Category	Inservice Testing Type and Frequency	IST Notes
NMS-VLV-512A	Main steam safety valve	Relief	Maintain Close Transfer Open Transfer Close	Active Containment Isolation Remote Position	BC	Remote Position Indication, Alternate/2 Years Class 2/3 Relief Valve Tests/5 Years and 20% in 2 Years	1
NMS-VLV-513A	Main steam safety valve	Relief	Maintain Close Transfer Open Transfer Close	Active Containment Isolation Remote Position	BC	Remote Position Indication, Alternate/2 Years Class 2/3 Relief Valve Tests/5 Years and 20% in 2 Years	1
NMS-VLV-514A	Main steam safety valve	Relief	Maintain Close Transfer Open Transfer Close	Active Containment Isolation Remote Position	BC	Remote Position Indication, Alternate/2 Years Class 2/3 Relief Valve Tests/5 Years and 20% in 2 Years	1
NMS-VLV-509B	Main steam safety valve	Relief	Maintain Close Transfer Open Transfer Close	Active Containment Isolation Remote Position	BC	Remote Position Indication, Alternate/2 Years Class 2/3 Relief Valve Tests/5 Years and 20% in 2 Years	1

Table 3.9-14 Valve Inservice Test Requirements (Sheet 67 of 138)

Valve Tag Number	Description	Valve Type	Safety-Related Missions	Safety Functions(2)	ASME IST Category	Inservice Testing Type and Frequency	IST Notes
NMS-VLV-510B	Main steam safety valve	Relief	Maintain Close Transfer Open Transfer Close	Active Containment Isolation Remote Position	BC	Remote Position Indication, Alternate/2 Years Class 2/3 Relief Valve Tests/5 Years and 20% in 2 Years	1
NMS-VLV-511B	Main steam safety valve	Relief	Maintain Close Transfer Open Transfer Close	Active Containment Isolation Remote Position	BC	Remote Position Indication, Alternate/2 Years Class 2/3 Relief Valve Tests/5 Years and 20% in 2 Years	1
NMS-VLV-512B	Main steam safety valve	Relief	Maintain Close Transfer Open Transfer Close	Active Containment Isolation Remote Position	BC	Remote Position Indication, Alternate/2 Years Class 2/3 Relief Valve Tests/5 Years and 20% in 2 Years	1
NMS-VLV-513B	Main steam safety valve	Relief	Maintain Close Transfer Open Transfer Close	Active Containment Isolation Remote Position	BC	Remote Position Indication, Alternate/2 Years Class 2/3 Relief Valve Tests/5 Years and 20% in 2 Years	1

Table 3.9-14 Valve Inservice Test Requirements (Sheet 68 of 138)

Valve Tag Number	Description	Valve Type	Safety-Related Missions	Safety Functions(2)	ASME IST Category	Inservice Testing Type and Frequency	IST Notes
NMS-VLV-514B	Main steam safety valve	Relief	Maintain Close Transfer Open Transfer Close	Active Containment Isolation Remote Position	BC	Remote Position Indication, Alternate/2 Years Class 2/3 Relief Valve Tests/5 Years and 20% in 2 Years	1
NMS-VLV-509C	Main steam safety valve	Relief	Maintain Close Transfer Open Transfer Close	Active Containment Isolation Remote Position	BC	Remote Position Indication, Alternate/2 Years Class 2/3 Relief Valve Tests/5 Years and 20% in 2 Years	1
NMS-VLV-510C	Main steam safety valve	Relief	Maintain Close Transfer Open Transfer Close	Active Containment Isolation Remote Position	BC	Remote Position Indication, Alternate/2 Years Class 2/3 Relief Valve Tests/5 Years and 20% in 2 Years	1
NMS-VLV-511C	Main steam safety valve	Relief	Maintain Close Transfer Open Transfer Close	Active Containment Isolation Remote Position	BC	Remote Position Indication, Alternate/2 Years Class 2/3 Relief Valve Tests/5 Years and 20% in 2 Years	1

Table 3.9-14 Valve Inservice Test Requirements (Sheet 69 of 138)

Valve Tag Number	Description	Valve Type	Safety-Related Missions	Safety Functions(2)	ASME IST Category	Inservice Testing Type and Frequency	IST Notes
NMS-VLV-512C	Main steam safety valve	Relief	Maintain Close Transfer Open Transfer Close	Active Containment Isolation Remote Position	BC	Remote Position Indication, Alternate/2 Years Class 2/3 Relief Valve Tests/5 Years and 20% in 2 Years	1
NMS-VLV-513C	Main steam safety valve	Relief	Maintain Close Transfer Open Transfer Close	Active Containment Isolation Remote Position	BC	Remote Position Indication, Alternate/2 Years Class 2/3 Relief Valve Tests/5 Years and 20% in 2 Years	1
NMS-VLV-514C	Main steam safety valve	Relief	Maintain Close Transfer Open Transfer Close	Active Containment Isolation Remote Position	BC	Remote Position Indication, Alternate/2 Years Class 2/3 Relief Valve Tests/5 Years and 20% in 2 Years	1
NMS-VLV-509D	Main steam safety valve	Relief	Maintain Close Transfer Open Transfer Close	Active Containment Isolation Remote Position	BC	Remote Position Indication, Alternate/2 Years Class 2/3 Relief Valve Tests/5 Years and 20% in 2 Years	1

Table 3.9-14 Valve Inservice Test Requirements (Sheet 70 of 138)

Valve Tag Number	Description	Valve Type	Safety-Related Missions	Safety Functions(2)	ASME IST Category	Inservice Testing Type and Frequency	IST Notes
NMS-VLV-510D	Main steam safety valve	Relief	Maintain Close Transfer Open Transfer Close	Active Containment Isolation Remote Position	BC	Remote Position Indication, Alternate/2 Years Class 2/3 Relief Valve Tests/5 Years and 20% in 2 Years	1
NMS-VLV-511D	Main steam safety valve	Relief	Maintain Close Transfer Open Transfer Close	Active Containment Isolation Remote Position	BC	Remote Position Indication, Alternate/2 Years Class 2/3 Relief Valve Tests/5 Years and 20% in 2 Years	1
NMS-VLV-512D	Main steam safety valve	Relief	Maintain Close Transfer Open Transfer Close	Active Containment Isolation Remote Position	BC	Remote Position Indication, Alternate/2 Years Class 2/3 Relief Valve Tests/5 Years and 20% in 2 Years	1
NMS-VLV-513D	Main steam safety valve	Relief	Maintain Close Transfer Open Transfer Close	Active Containment Isolation Remote Position	BC	Remote Position Indication, Alternate/2 Years Class 2/3 Relief Valve Tests/5 Years and 20% in 2 Years	1

Table 3.9-14 Valve Inservice Test Requirements (Sheet 71 of 138)

Valve Tag Number	Description	Valve Type	Safety-Related Missions	Safety Functions(2)	ASME IST Category	Inservice Testing Type and Frequency	IST Notes
NMS-VLV-514D	Main steam safety valve	Relief	Maintain Close Transfer Open Transfer Close	Active Containment Isolation Remote Position	BC	Remote Position Indication, Alternate/2 Years Class 2/3 Relief Valve Tests/5 Years and 20% in 2 Years	1
NMS-VLV-516A	Main steam check	Check	Maintain Close Transfer Close	Active	B	Check Exercise (Alternative method) /Refueling Outage	12
NMS-VLV-516B	Main steam check	Check	Maintain Close Transfer Close	Active	B	Check Exercise (Alternative method) /Refueling Outage	12
NMS-VLV-516C	Main steam check	Check	Maintain Close Transfer Close	Active	B	Check Exercise (Alternative method) /Refueling Outage	12
NMS-VLV-516D	Main steam check	Check	Maintain Close Transfer Close	Active	B	Check Exercise (Alternative method) /Refueling Outage	12
NMS-MOV-701A	Main steam drain line isolation	Remote	Maintain Close Transfer Close	Active-to-Fail Containment Isolation Remote Position	B	Remote Position Indication, Exercise/2 Years Exercise Full Stroke/ Cold Shutdown Operability Test	6

Table 3.9-14 Valve Inservice Test Requirements (Sheet 72 of 138)

Valve Tag Number	Description	Valve Type	Safety-Related Missions	Safety Functions(2)	ASME IST Category	Inservice Testing Type and Frequency	IST Notes
NMS-MOV-701B	Main steam drain line isolation	Remote	Maintain Close Transfer Close	Active-to-Fail Containment Isolation Remote Position	B	Remote Position Indication, Exercise/2 Years Exercise Full Stroke/ Cold Shutdown Operability Test	6
NMS-MOV-701C	Main steam drain line isolation	Remote	Maintain Close Transfer Close	Active-to-Fail Containment Isolation Remote Position	B	Remote Position Indication, Exercise/2 Years Exercise Full Stroke/ Cold Shutdown Operability Test	6
NMS-MOV-701D	Main steam drain line isolation	Remote	Maintain Close Transfer Close	Active-to-Fail Containment Isolation Remote Position	B	Remote Position Indication, Exercise/2 Years Exercise Full Stroke/ Cold Shutdown Operability Test	6
CSS-MOV-001A	Containment spray/residual heat removal pump suction isolation (refueling water storage pit side)	Remote	Maintain Open Maintain Close Transfer Close	Active Containment Isolation Remote Position	B	Remote Position Indication, Exercise/2 Years Exercise Full Stroke/Quarterly Operability Test	

Table 3.9-14 Valve Inservice Test Requirements (Sheet 73 of 138)

Valve Tag Number	Description	Valve Type	Safety-Related Missions	Safety Functions(2)	ASME IST Category	Inservice Testing Type and Frequency	IST Notes
CSS-MOV-001B	Containment spray/residual heat removal pump suction isolation (refueling water storage pit side)	Remote	Maintain Open Maintain Close Transfer Close	Active Containment Isolation Remote Position	B	Remote Position Indication, Exercise/2 Years Exercise Full Stroke/Quarterly Operability Test	
CSS-MOV-001C	Containment spray/residual heat removal pump suction isolation (refueling water storage pit side)	Remote	Maintain Open Maintain Close Transfer Close	Active Containment Isolation Remote Position	B	Remote Position Indication, Exercise/2 Years Exercise Full Stroke/Quarterly Operability Test	
CSS-MOV-001D	Containment spray/residual heat removal pump suction isolation (refueling water storage pit side)	Remote	Maintain Open Maintain Close Transfer Close	Active Containment Isolation Remote Position	B	Remote Position Indication, Exercise/2 Years Exercise Full Stroke/Quarterly Operability Test	

Table 3.9-14 Valve Inservice Test Requirements (Sheet 74 of 138)

Valve Tag Number	Description	Valve Type	Safety-Related Missions	Safety Functions(2)	ASME IST Category	Inservice Testing Type and Frequency	IST Notes
CSS-MOV-004A	Containment spray header containment isolation	Remote	Maintain Close Transfer Open Transfer Close	Active Containment Isolation Remote Position	B	Remote Position Indication, Exercise/2 Years Exercise Full Stroke/Quarterly Operability Test	
CSS-MOV-004B	Containment spray header containment isolation	Remote	Maintain Close Transfer Open Transfer Close	Active Containment Isolation Remote Position	B	Remote Position Indication, Exercise/2 Years Exercise Full Stroke/Quarterly Operability Test	
CSS-MOV-004C	Containment spray header containment isolation	Remote	Maintain Close Transfer Open Transfer Close	Active Containment Isolation Remote Position	B	Remote Position Indication, Exercise/2 Years Exercise Full Stroke/Quarterly Operability Test	
CSS-MOV-004D	Containment spray header containment isolation	Remote	Maintain Close Transfer Open Transfer Close	Active Containment Isolation Remote Position	B	Remote Position Indication, Exercise/2 Years Exercise Full Stroke/Quarterly Operability Test	

Table 3.9-14 Valve Inservice Test Requirements (Sheet 75 of 138)

Valve Tag Number	Description	Valve Type	Safety-Related Missions	Safety Functions(2)	ASME IST Category	Inservice Testing Type and Frequency	IST Notes
CSS-VLV-005A	Containment spray header containment isolation	Check	Maintain Close Transfer Open Transfer Close	Active Containment Isolation	BC	Check Exercise(Alternative method) /Refueling Outage	12
CSS-VLV-005B	Containment spray header containment isolation	Check	Maintain Close Transfer Open Transfer Close	Active Containment Isolation	BC	Check Exercise(Alternative method) /Refueling Outage	12
CSS-VLV-005C	Containment spray header containment isolation	Check	Maintain Close Transfer Open Transfer Close	Active Containment Isolation	BC	Check Exercise(Alternative method) /Refueling Outage	12
CSS-VLV-005D	Containment spray header containment isolation	Check	Maintain Close Transfer Open Transfer Close	Active Containment Isolation	BC	Check Exercise(Alternative method) /Refueling Outage	12
NCS-MOV-007A	Train return header separation	Remote	Maintain Close Transfer Close Transfer Open Maintain Open	Active Remote Position	B	Remote Position Indication, Exercise/2 Years Exercise Full Stroke/Cold Shutdown Operability Test	7

Table 3.9-14 Valve Inservice Test Requirements (Sheet 76 of 138)

Valve Tag Number	Description	Valve Type	Safety-Related Missions	Safety Functions(2)	ASME IST Category	Inservice Testing Type and Frequency	IST Notes
NCS-MOV-007B	Train return header separation	Remote	Maintain Close Transfer Close Transfer Open Maintain Open	Active Remote Position	B	Remote Position Indication, Exercise/2 Years Exercise Full Stroke/Cold Shutdown Operability Test	7
NCS-MOV-007C	Train return header separation	Remote	Maintain Close Transfer Close Transfer Open Maintain Open	Active Remote Position	B	Remote Position Indication, Exercise/2 Years Exercise Full Stroke/Cold Shutdown Operability Test	7
NCS-MOV-007D	Train return header separation	Remote	Maintain Close Transfer Close Transfer Open Maintain Open	Active Remote Position	B	Remote Position Indication, Exercise/2 Years Exercise Full Stroke/Cold Shutdown Operability Test	7
NCS-MOV-020A	Train supply header separation	Remote	Maintain Close Transfer Close Transfer Open Maintain Open	Active Remote Position	B	Remote Position Indication, Exercise/2 Years Exercise Full Stroke/Cold Shutdown Operability Test	7

Table 3.9-14 Valve Inservice Test Requirements (Sheet 77 of 138)

Valve Tag Number	Description	Valve Type	Safety-Related Missions	Safety Functions(2)	ASME IST Category	Inservice Testing Type and Frequency	IST Notes
NCS-MOV-020B	Train supply header separation	Remote	Maintain Close Transfer Close Transfer Open Maintain Open	Active Remote Position	B	Remote Position Indication, Exercise/2 Years Exercise Full Stroke/Cold Shutdown Operability Test	7
NCS-MOV-020C	Train supply header separation	Remote	Maintain Close Transfer Close Transfer Open Maintain Open	Active Remote Position	B	Remote Position Indication, Exercise/2 Years Exercise Full Stroke/Cold Shutdown Operability Test	7
NCS-MOV-020D	Train supply header separation	Remote	Maintain Close Transfer Close Transfer Open Maintain Open	Active Remote Position	B	Remote Position Indication, Exercise/2 Years Exercise Full Stroke/Cold Shutdown Operability Test	7
NCS-MOV-145A	Containment spray/residual heat exchanger component cooling water isolation	Remote	Maintain Close Transfer Open Transfer Close	Active Remote Position	B	Remote Position Indication, Exercise/2 Years Exercise Full Stroke/ Quarterly Operability Test	

Table 3.9-14 Valve Inservice Test Requirements (Sheet 78 of 138)

Valve Tag Number	Description	Valve Type	Safety-Related Missions	Safety Functions(2)	ASME IST Category	Inservice Testing Type and Frequency	IST Notes
NCS-MOV-145B	Containment spray/residual heat exchanger component cooling water isolation	Remote	Maintain Close Transfer Open Transfer Close	Active Remote Position	B	Remote Position Indication, Exercise/2 Years Exercise Full Stroke/ Quarterly Operability Test	
NCS-MOV-145C	Containment spray/residual heat exchanger component cooling water isolation	Remote	Maintain Close Transfer Open Transfer Close	Active Remote Position	B	Remote Position Indication, Exercise/2 Years Exercise Full Stroke/ Quarterly Operability Test	
NCS-MOV-145D	Containment spray/residual heat exchanger component cooling water isolation	Remote	Maintain Close Transfer Open Transfer Close	Active Remote Position	B	Remote Position Indication, Exercise/2 Years Exercise Full Stroke/ Quarterly Operability Test	
NCS-MOV-316A	Charger Pump component cooling water return	Remote	Maintain Open	Remote Position	B	Remote Position Indication, Exercise/2 Years Exercise Full Stroke/ Quarterly Operability Test	

Table 3.9-14 Valve Inservice Test Requirements (Sheet 79 of 138)

Valve Tag Number	Description	Valve Type	Safety-Related Missions	Safety Functions(2)	ASME IST Category	Inservice Testing Type and Frequency	IST Notes
NCS-MOV-316B	Charger Pump component cooling water return	Remote	Maintain Open	Remote Position	B	Remote Position Indication, Exercise/2 Years Exercise Full Stroke/ Quarterly Operability Test	
NCS-MOV-511	Excess letdown heat exchanger component cooling water supply containment isolation	Remote	Maintain Close Transfer Close	Active Containment Isolation Safety Seat Leakage Remote Position	A	Remote Position Indication, Exercise/2 Years Containment Isolation Leak Test Exercise Full Stroke/Quarterly Operability Test	5
NCS-MOV-517	Excess letdown heat exchanger component cooling water return containment isolation	Remote	Maintain Close Transfer Close	Active Containment Isolation Safety Seat Leakage Remote Position	A	Remote Position Indication, Exercise/2 Years Containment Isolation Leak Test Exercise Full Stroke/Quarterly Operability Test	5

Table 3.9-14 Valve Inservice Test Requirements (Sheet 80 of 138)

Valve Tag Number	Description	Valve Type	Safety-Related Missions	Safety Functions(2)	ASME IST Category	Inservice Testing Type and Frequency	IST Notes
NCS-MOV-531	Letdown heat exchanger component cooling water supply containment isolation	Remote	Maintain Close Transfer Close	Active Containment Isolation Safety Seat Leakage Remote Position	A	Remote Position Indication, Exercise/2 Years Containment Isolation Leak Test Exercise Full Stroke/ Cold Shutdown Operability Test	4 5
NCS-MOV-537	Letdown heat exchanger component cooling water return containment isolation	Remote	Maintain Close Transfer Close	Active Containment Isolation Safety Seat Leakage Remote Position	A	Remote Position Indication, Exercise/2 Years Containment Isolation Leak Test Exercise Full Stroke/ Cold Shutdown Operability Test	4 5

Table 3.9-14 Valve Inservice Test Requirements (Sheet 81 of 138)

Valve Tag Number	Description	Valve Type	Safety-Related Missions	Safety Functions(2)	ASME IST Category	Inservice Testing Type and Frequency	IST Notes
NCS-MOV-232A	Cross-connection between A,B-reactor coolant pump and C,D-reactor coolant pump component cooling water return line isolation	Remote	Maintain Close Transfer Open	Active Remote Position	B	Remote Position Indication, Exercise/2 Years Exercise Full Stroke/ Cold Shutdown Operability Test	7
NCS-MOV-232B	Cross-connection between A,B-reactor coolant pump and C,D-reactor coolant pump component cooling water return line isolation	Remote	Maintain Close Transfer Open	Active Remote Position	B	Remote Position Indication, Exercise/2 Years Exercise Full Stroke/ Cold Shutdown Operability Test	7

Table 3.9-14 Valve Inservice Test Requirements (Sheet 82 of 138)

Valve Tag Number	Description	Valve Type	Safety-Related Missions	Safety Functions(2)	ASME IST Category	Inservice Testing Type and Frequency	IST Notes
NCS-MOV-233A	Cross-connection between A,B-reactor coolant pump and C,D-reactor coolant pump component cooling water return line isolation	Remote	Maintain Close Transfer Open	Active Remote Position	B	Remote Position Indication, Exercise/2 Years Exercise Full Stroke/ Cold Shutdown Operability Test	7
NCS-MOV-233B	Cross-connection between A,B-reactor coolant pump and C,D-reactor coolant pump component cooling water return line isolation	Remote	Maintain Close Transfer Open	Active Remote Position	B	Remote Position Indication, Exercise/2 Years Exercise Full Stroke/ Cold Shutdown Operability Test	7

Table 3.9-14 Valve Inservice Test Requirements (Sheet 83 of 138)

Valve Tag Number	Description	Valve Type	Safety-Related Missions	Safety Functions(2)	ASME IST Category	Inservice Testing Type and Frequency	IST Notes
NCS-MOV-234A	A,B-reactor coolant pump return line valve	Remote	Maintain Open Transfer Close	Active Remote Position	B	Remote Position Indication, Exercise/2 Years Exercise Full Stroke/ Cold Shutdown Operability Test	7
NCS-MOV-234B	A,B-reactor coolant pump return line valve	Remote	Maintain Open Transfer Close	Active Remote Position	B	Remote Position Indication, Exercise/2 Years Exercise Full Stroke/ Cold Shutdown Operability Test	7
NCS-MOV-402A	Reactor coolant pump component cooling water supply containment isolation	Remote	Maintain Close Transfer Close Transfer Open Maintain Open	Active Containment Isolation Safety Seat Leakage Remote Position	A	Remote Position Indication, Exercise/2 Years Containment Isolation Leak Test Exercise Full Stroke/ Cold Shutdown Operability Test	5 7

Table 3.9-14 Valve Inservice Test Requirements (Sheet 84 of 138)

Valve Tag Number	Description	Valve Type	Safety-Related Missions	Safety Functions(2)	ASME IST Category	Inservice Testing Type and Frequency	IST Notes
NCS-MOV-402B	Reactor coolant pump component cooling water supply containment isolation	Remote	Maintain Close Transfer Close Transfer Open Maintain Open	Active Containment Isolation Safety Seat Leakage Remote Position	A	Remote Position Indication, Exercise/2 Years Containment Isolation Leak Test Exercise Full Stroke/ Cold Shutdown Operability Test	5 7
NCS-VLV-403A	Reactor coolant pump component cooling water supply containment isolation	Check	Maintain Close Transfer Close Transfer Open Maintain Open	Active Containment Isolation Safety Seat Leakage	AC	Containment Isolation Leak Test Check Exercise / Refueling Outage	3 5
NCS-VLV-403B	Reactor coolant pump component cooling water supply containment isolation	Check	Maintain Close Transfer Close Transfer Open Maintain Open	Active Containment Isolation Safety Seat Leakage	AC	Containment Isolation Leak Test Check Exercise / Refueling Outage	3 5

Table 3.9-14 Valve Inservice Test Requirements (Sheet 85 of 138)

Valve Tag Number	Description	Valve Type	Safety-Related Missions	Safety Functions(2)	ASME IST Category	Inservice Testing Type and Frequency	IST Notes
NCS-MOV-438A	Reactor coolant pump component cooling water return containment isolation	Remote	Maintain Close Transfer Close Transfer Open Maintain Open	Active Containment Isolation Safety Seat Leakage Remote Position	A	Remote Position Indication, Exercise/2 Years Containment Isolation Leak Test Exercise Full Stroke/ Cold Shutdown Operability Test	5 7
NCS-MOV-438B	Reactor coolant pump component cooling water return containment isolation	Remote	Maintain Close Transfer Close Transfer Open Maintain Open	Active Containment Isolation Safety Seat Leakage Remote Position	A	Remote Position Indication, Exercise/2 Years Containment Isolation Leak Test Exercise Full Stroke/ Cold Shutdown Operability Test	5 7
NCS-MOV-436A	Reactor coolant pump component cooling water return containment isolation	Remote	Maintain Close Transfer Close Transfer Open Maintain Open	Active Containment Isolation Safety Seat Leakage Remote Position	A	Remote Position Indication, Exercise/2 Years Containment Isolation Leak Test Exercise Full Stroke/ Cold Shutdown Operability Test	5 7

Table 3.9-14 Valve Inservice Test Requirements (Sheet 86 of 138)

Valve Tag Number	Description	Valve Type	Safety-Related Missions	Safety Functions(2)	ASME IST Category	Inservice Testing Type and Frequency	IST Notes
NCS-MOV-436B	Reactor coolant pump component cooling water return containment isolation	Remote	Maintain Close Transfer Close Transfer Open Maintain Open	Active Containment Isolation Safety Seat Leakage Remote Position	A	Remote Position Indication, Exercise/2 Years Containment Isolation Leak Test Exercise Full Stroke/ Cold Shutdown Operability Test	5 7
NCS-MOV-401A	Reactor coolant pump component cooling water supply line isolation	Remote	Maintain Close Transfer Close Transfer Open Maintain Open	Active Remote Position	B	Remote Position Indication, Exercise/2 Years Exercise Full Stroke/ Cold Shutdown Operability Test	7
NCS-MOV-401B	Reactor coolant pump component cooling water supply line isolation	Remote	Maintain Close Transfer Close Transfer Open Maintain Open	Active Remote Position	B	Remote Position Indication, Exercise/2 Years Exercise Full Stroke/ Cold Shutdown Operability Test	7

Table 3.9-14 Valve Inservice Test Requirements (Sheet 87 of 138)

Valve Tag Number	Description	Valve Type	Safety-Related Missions	Safety Functions(2)	ASME IST Category	Inservice Testing Type and Frequency	IST Notes
NCS-MOV-445A	Reactor coolant pump component cooling water supply containment isolation valve bypass	Remote	Maintain Close Transfer Close Transfer Open	Active Containment Isolation Safety Seat Leakage Remote Position	A	Remote Position Indication, Exercise/2 Years Containment Isolation Leak Test Exercise Full Stroke/ Cold Shutdown Operability Test	5 7
NCS-MOV-445B	Reactor coolant pump component cooling water supply containment isolation valve bypass	Remote	Maintain Close Transfer Close Transfer Open	Active Containment Isolation Safety Seat Leakage Remote Position	A	Remote Position Indication, Exercise/2 Years Containment Isolation Leak Test Exercise Full Stroke/ Cold Shutdown Operability Test	5 7
NCS-MOV-446A	Reactor coolant pump motor component cooling water inlet side isolation	Remote	Maintain Open Transfer Close	Active Remote Position	B	Remote Position Indication, Exercise/2 Years Exercise Full Stroke/ Cold Shutdown Operability Test	7

Table 3.9-14 Valve Inservice Test Requirements (Sheet 88 of 138)

Valve Tag Number	Description	Valve Type	Safety-Related Missions	Safety Functions(2)	ASME IST Category	Inservice Testing Type and Frequency	IST Notes
NCS-MOV-446B	Reactor coolant pump motor component cooling water inlet side isolation	Remote	Maintain Open Transfer Close	Active Remote Position	B	Remote Position Indication, Exercise/2 Years Exercise Full Stroke/ Cold Shutdown Operability Test	7
NCS-MOV-446C	Reactor coolant pump motor component cooling water inlet side isolation	Remote	Maintain Open Transfer Close	Active Remote Position	B	Remote Position Indication, Exercise/2 Years Exercise Full Stroke/ Cold Shutdown Operability Test	7
NCS-MOV-446D	Reactor coolant pump motor component cooling water inlet side isolation	Remote	Maintain Open Transfer Close	Active Remote Position	B	Remote Position Indication, Exercise/2 Years Exercise Full Stroke/ Cold Shutdown Operability Test	7
NCS-MOV-447A	Reactor coolant pump component cooling water return containment isolation valve(In CV) bypass	Remote	Maintain Close Transfer Close Transfer Open	Active Containment Isolation Safety Seat Leakage Remote Position	A	Remote Position Indication, Exercise/2 Years Containment Isolation Leak Test Exercise Full Stroke/ Cold Shutdown Operability Test	5 7

Table 3.9-14 Valve Inservice Test Requirements (Sheet 89 of 138)

Valve Tag Number	Description	Valve Type	Safety-Related Missions	Safety Functions(2)	ASME IST Category	Inservice Testing Type and Frequency	IST Notes
NCS-MOV-447B	Reactor coolant pump component cooling water return containment isolation valve(In CV) bypass	Remote	Maintain Close Transfer Close Transfer Open	Active Containment Isolation Safety Seat Leakage Remote Position	A	Remote Position Indication, Exercise/2 Years Containment Isolation Leak Test Exercise Full Stroke/ Cold Shutdown Operability Test	5 7
NCS-MOV-448A	Reactor coolant pump component cooling water return containment isolation valve(In CV) bypass	Remote	Maintain Close Transfer Close Transfer Open	Active Containment Isolation Safety Seat Leakage Remote Position	A	Remote Position Indication, Exercise/2 Years Containment Isolation Leak Test Exercise Full Stroke/ Cold Shutdown Operability Test	5 7
NCS-MOV-448B	Reactor coolant pump component cooling water Return Containment Isolation Valve(In RB) Bypass Valve	Remote	Maintain Close Transfer Close Transfer Open	Active Containment Isolation Safety Seat Leakage Remote Position	A	Remote Position Indication, Exercise/2 Years Containment Isolation Leak Test Exercise Full Stroke/ Cold Shutdown Operability Test	5 7

Table 3.9-14 Valve Inservice Test Requirements (Sheet 90 of 138)

Valve Tag Number	Description	Valve Type	Safety-Related Missions	Safety Functions(2)	ASME IST Category	Inservice Testing Type and Frequency	IST Notes
NCS-VLV-003A	Component cooling water surge tank relief	Relief	Maintain Close Transfer Open Transfer Close	Active	BC	Class 2/3 Relief Valve Tests/10 Years and 20% in 4 Years	
NCS-VLV-003B	Component cooling water surge tank relief	Relief	Maintain Close Transfer Open Transfer Close	Active	BC	Class 2/3 Relief Valve Tests/10 Years and 20% in 4 Years	
NCS-VLV-016A	Component cooling water pump discharge check	Check	Maintain Open Transfer Open Transfer Close	Active	BC	Check Exercise/ Refueling Outage	3
NCS-VLV-016B	Component cooling water pump discharge check	Check	Maintain Open Transfer Open Transfer Close	Active	BC	Check Exercise/ Refueling Outage	3
NCS-VLV-016C	Component cooling water pump discharge check	Check	Maintain Open Transfer Open Transfer Close	Active	BC	Check Exercise/ Refueling Outage	3
NCS-VLV-016D	Component cooling water Pump discharge check	Check	Maintain Open Transfer Open Transfer Close	Active	BC	Check Exercise/ Refueling Outage	3

Table 3.9-14 Valve Inservice Test Requirements (Sheet 91 of 138)

Valve Tag Number	Description	Valve Type	Safety-Related Missions	Safety Functions(2)	ASME IST Category	Inservice Testing Type and Frequency	IST Notes
NCS-AOV-601	Auxiliary building component cooling water supply header isolation	Remote	Maintain Close Transfer Close	Active to Failed Remote Position	B	Remote Position Indication, Exercise/2 Years Exercise Full Stroke/ Cold Shutdown Operability Test	6
NCS-AOV-602	Auxiliary building component cooling water supply header isolation	Remote	Maintain Close Transfer Close	Active to Failed Remote Position	B	Remote Position Indication, Exercise/2 Years Exercise Full Stroke/ Cold Shutdown Operability Test	6
NCS-VLV-652	Auxiliary building component cooling water return header check	Check	Maintain Close Transfer Close	Active	BC	Check Exercise/ Refueling Outage	3
NCS-VLV-653	Auxiliary building component cooling water return header check	Check	Maintain Close Transfer Close	Active	BC	Check Exercise/ Refueling Outage	3

Table 3.9-14 Valve Inservice Test Requirements (Sheet 92 of 138)

Valve Tag Number	Description	Valve Type	Safety-Related Missions	Safety Functions(2)	ASME IST Category	Inservice Testing Type and Frequency	IST Notes
NCS-AOV-661A	Turbine building component cooling water supply header isolation	Remote	Maintain Close Transfer Close	Active to Failed Remote Position	B	Remote Position Indication, Exercise/2 Years Exercise Full Stroke/ Cold Shutdown Operability Test	6
NCS-AOV-662A	Turbine building component cooling water supply header isolation	Remote	Maintain Close Transfer Close	Active to Failed Remote Position	B	Remote Position Indication, Exercise/2 Years Exercise Full Stroke/ Cold Shutdown Operability Test	6
NCS-VLV-670A	Turbine building component cooling water supply header check	Check	Maintain Close Transfer Close	Active	BC	Check Exercise/ Refueling Outage	3
NCS-VLV-671A	Turbine building component cooling water supply header check	Check	Maintain Close Transfer Close	Active	BC	Check Exercise/ Refueling Outage	3

Table 3.9-14 Valve Inservice Test Requirements (Sheet 93 of 138)

Valve Tag Number	Description	Valve Type	Safety-Related Missions	Safety Functions(2)	ASME IST Category	Inservice Testing Type and Frequency	IST Notes
NCS-AOV-661B	Turbine building component cooling water supply header isolation	Remote	Maintain Close Transfer Close	Active to Failed Remote Position	B	Remote Position Indication, Exercise/2 Years Exercise Full Stroke/ Cold Shutdown Operability Test	6
NCS-AOV-662B	Turbine building component cooling water supply header isolation	Remote	Maintain Close Transfer Close	Active to Failed Remote Position	B	Remote Position Indication, Exercise/2 Years Exercise Full Stroke/ Cold Shutdown Operability Test	6
NCS-VLV-670B	Turbine building component cooling water supply header check	Check	Maintain Close Transfer Close	Active	BC	Check Exercise/ Refueling Outage	3
NCS-VLV-671B	Turbine building component cooling water supply header check	Check	Maintain Close Transfer Close	Active	BC	Check Exercise/ Refueling Outage	3

Table 3.9-14 Valve Inservice Test Requirements (Sheet 94 of 138)

Valve Tag Number	Description	Valve Type	Safety-Related Missions	Safety Functions(2)	ASME IST Category	Inservice Testing Type and Frequency	IST Notes
NCS-VLV-405A	Reactor coolant pump thermal barrier heat exchanger component cooling water supply check	Check	Maintain Open Transfer Open Transfer Close	Active	BC	Check Exercise/ Refueling Outage	3
NCS-VLV-405B	Reactor coolant pump thermal barrier heat exchanger component cooling water supply check	Check	Maintain Open Transfer Open Transfer Close	Active	BC	Check Exercise/ Refueling Outage	3
NCS-VLV-405C	Reactor coolant pump thermal barrier heat exchanger component cooling water supply check	Check	Maintain Open Transfer Open Transfer Close	Active	BC	Check Exercise/ Refueling Outage	3

Table 3.9-14 Valve Inservice Test Requirements (Sheet 95 of 138)

Valve Tag Number	Description	Valve Type	Safety-Related Missions	Safety Functions(2)	ASME IST Category	Inservice Testing Type and Frequency	IST Notes
NCS-VLV-405D	Reactor coolant pump thermal barrier heat exchanger component cooling water supply check	Check	Maintain Open Transfer Open Transfer Close	Active	BC	Check Exercise/ Refueling Outage	3
NCS-FCV-1319 A	Reactor coolant pump thermal barrier heat exchanger component cooling water return isolation	Remote	Maintain Open Transfer Close	Active Remote Position	B	Remote Position Indication, Exercise/2 Years Exercise Full Stroke/ Cold Shutdown Operability Test	7
NCS-FCV-1320 A	Reactor coolant pump thermal barrier heat exchanger component cooling water return isolation	Remote	Maintain Open Transfer Close	Active Remote Position	B	Remote Position Indication, Exercise/2 Years Exercise Full Stroke/ Cold Shutdown Operability Test	7

Table 3.9-14 Valve Inservice Test Requirements (Sheet 96 of 138)

Valve Tag Number	Description	Valve Type	Safety-Related Missions	Safety Functions(2)	ASME IST Category	Inservice Testing Type and Frequency	IST Notes
NCS-FCV-1321 A	Reactor coolant pump thermal barrier heat exchanger component cooling water return isolation	Remote	Maintain Open Transfer Close	Active Remote Position	B	Remote Position Indication, Exercise/2 Years Exercise Full Stroke/ Cold Shutdown Operability Test	7
NCS-FCV-1322 A	Reactor coolant pump thermal barrier heat exchanger component cooling water return isolation	Remote	Maintain Open Transfer Close	Active Remote Position	B	Remote Position Indication, Exercise/2 Years Exercise Full Stroke/ Cold Shutdown Operability Test	7
NCS-FCV-1319 B	Reactor coolant pump thermal barrier heat exchanger component cooling water return isolation	Remote	Maintain Open Transfer Close	Active Remote Position	B	Remote Position Indication, Exercise/2 Years Exercise Full Stroke/ Cold Shutdown Operability Test	7

Table 3.9-14 Valve Inservice Test Requirements (Sheet 97 of 138)

Valve Tag Number	Description	Valve Type	Safety-Related Missions	Safety Functions(2)	ASME IST Category	Inservice Testing Type and Frequency	IST Notes
NCS-FCV-1320 B	Reactor coolant pump thermal barrier heat exchanger component cooling water return isolation	Remote	Maintain Open Transfer Close	Active Remote Position	B	Remote Position Indication, Exercise/2 Years Exercise Full Stroke/ Cold Shutdown Operability Test	7
NCS-FCV-1321 B	Reactor coolant pump thermal barrier heat exchanger component cooling water return isolation	Remote	Maintain Open Transfer Close	Active Remote Position	B	Remote Position Indication, Exercise/2 Years Exercise Full Stroke/ Cold Shutdown Operability Test	7
NCS-FCV-1322B	Reactor coolant pump thermal barrier heat exchanger component cooling water return isolation	Remote	Maintain Open Transfer Close	Active Remote Position	B	Remote Position Indication, Exercise/2 Years Exercise Full Stroke/ Cold Shutdown Operability Test	7
NCS-VLV-435A	Reactor coolant pump component cooling water return line relief	Relief	Maintain Close Transfer Open Transfer Close	Active	BC	Class 2/3 Relief Valve Tests/10 Years and 20% in 4 Years	

Table 3.9-14 Valve Inservice Test Requirements (Sheet 98 of 138)

Valve Tag Number	Description	Valve Type	Safety-Related Missions	Safety Functions(2)	ASME IST Category	Inservice Testing Type and Frequency	IST Notes
NCS-VLV-435B	Reactor coolant pump component cooling water return line relief	Relief	Maintain Close Transfer Open Transfer Close	Active	BC	Class 2/3 Relief Valve Tests/10 Years and 20% in 4 Years	
NCS-VLV-439A	Reactor coolant pump component cooling water return line check	Check	Maintain Open Transfer Open Transfer Close	Active	BC	Check Exercise/ Refueling Outage	3
NCS-VLV-439B	Reactor coolant pump component cooling water return line check	Check	Maintain Open Transfer Open Transfer Close	Active	BC	Check Exercise/ Refueling Outage	3
SFS-VLV-006A	Spent fuel pit pump discharge check	Check	Maintain Open Transfer Open Transfer Close	Active	BC	Check Exercise/ Refueling Outage	3
SFS-VLV-006B	Spent fuel pit pump discharge check	Check	Maintain Open Transfer Open Transfer Close	Active	BC	Check Exercise/ Refueling Outage	3
EWS-VLV-502A	Essential service water pump discharge check	Check	Maintain Open Transfer Open Maintain Close Transfer Close	Active	BC	Check Exercise/ Refueling Outage	3
EWS-VLV-502B	Essential service water pump discharge check	Check	Maintain Open Transfer Open Maintain Close Transfer Close	Active	BC	Check Exercise/ Refueling Outage	3

Table 3.9-14 Valve Inservice Test Requirements (Sheet 99 of 138)

Valve Tag Number	Description	Valve Type	Safety-Related Missions	Safety Functions(2)	ASME IST Category	Inservice Testing Type and Frequency	IST Notes
EWS-VLV-502C	Essential service water pump discharge check	Check	Maintain Open Transfer Open Maintain Close Transfer Close	Active	BC	Check Exercise/ Refueling Outage	3
EWS-VLV-502D	Essential service water pump discharge check	Check	Maintain Open Transfer Open Maintain Close Transfer Close	Active	BC	Check Exercise/ Refueling Outage	3
EWS-MOV-503A	Essential service water pump discharge	Remote	Maintain Close Maintain Open Transfer Open	Active Remote Position	B	Remote Position Indication, Exercise/2 Years Exercise Full Stroke/ Cold Shutdown Operability Test	6
EWS-MOV-503B	Essential service water pump discharge	Remote	Maintain Close Maintain Open Transfer Open	Active Remote Position	B	Remote Position Indication, Exercise/2 Years Exercise Full Stroke/ Cold Shutdown Operability Test	6

Table 3.9-14 Valve Inservice Test Requirements (Sheet 100 of 138)

Valve Tag Number	Description	Valve Type	Safety-Related Missions	Safety Functions(2)	ASME IST Category	Inservice Testing Type and Frequency	IST Notes
EWS-MOV-503C	Essential service water pump discharge	Remote	Maintain Close Maintain Open Transfer Open	Active Remote Position	B	Remote Position Indication, Exercise/2 Years Exercise Full Stroke/ Cold Shutdown Operability Test	6
EWS-MOV-503D	Essential service water pump discharge	Remote	Maintain Close Maintain Open Transfer Open	Active Remote Position	B	Remote Position Indication, Exercise/2 Years Exercise Full Stroke/ Cold Shutdown Operability Test	6
EWS-VLV-602A	Essential service water pump cooling water check	Check	Maintain Open Transfer Open Transfer Close	Active	BC	Check Exercise/ Refueling Outage	3
EWS-VLV-602B	Essential service water pump cooling water check	Check	Maintain Open Transfer Open Transfer Close	Active	BC	Check Exercise/ Refueling Outage	3
EWS-VLV-602C	Essential service water pump cooling water check	Check	Maintain Open Transfer Open Transfer Close	Active	BC	Check Exercise/ Refueling Outage	3

Table 3.9-14 Valve Inservice Test Requirements (Sheet 101 of 138)

Valve Tag Number	Description	Valve Type	Safety-Related Missions	Safety Functions(2)	ASME IST Category	Inservice Testing Type and Frequency	IST Notes
EWS-VLV-602D	Essential service water pump cooling water check	Check	Maintain Open Transfer Open Transfer Close	Active	BC	Check Exercise/ Refueling Outage	3
LMS-AOV-060	C/V reactor coolant drain tank nitrogen supply containment isolation	Remote	Maintain Close Transfer Close	Active-to-Fail Containment Isolation Safety Seat Leakage Remote Position	A	Remote Position Indication, Exercise/2 Years Containment Isolation Leak Test Exercise Full Stroke/ Cold Shutdown Operability Test	5 6
LMS-AOV-056	C/V reactor coolant drain tank vent header containment isolation	Remote	Maintain Close Transfer Close	Active-to-Fail Containment Isolation Safety Seat Leakage Remote Position	A	Remote Position Indication, Exercise/2 Years Containment Isolation Leak Test Exercise Full Stroke/ Cold Shutdown Operability Test	5 6

Table 3.9-14 Valve Inservice Test Requirements (Sheet 102 of 138)

Valve Tag Number	Description	Valve Type	Safety-Related Missions	Safety Functions(2)	ASME IST Category	Inservice Testing Type and Frequency	IST Notes
LMS-AOV-055	C/V reactor coolant drain tank vent header containment isolation	Remote	Maintain Close Transfer Close	Active-to-Fail Containment Isolation Safety Seat Leakage Remote Position	A	Remote Position Indication, Exercise/2 Years Containment Isolation Leak Test Exercise Full Stroke/ Cold Shutdown Operability Test	5 6
LMS-AOV-053	C/V reactor coolant drain tank gas analyzer line containment isolation	Remote	Maintain Close Transfer Close	Active-to-Fail Containment Isolation Safety Seat Leakage Remote Position	A	Remote Position Indication, Exercise/2 Years Containment Isolation Leak Test Exercise Full Stroke/ Cold Shutdown Operability Test	5 6

Table 3.9-14 Valve Inservice Test Requirements (Sheet 103 of 138)

Valve Tag Number	Description	Valve Type	Safety-Related Missions	Safety Functions(2)	ASME IST Category	Inservice Testing Type and Frequency	IST Notes
LMS-AOV-052	C/V reactor coolant drain tank gas analyzer line containment isolation	Remote	Maintain Close Transfer Close	Active-to-Fail Containment Isolation Safety Seat Leakage Remote Position	A	Remote Position Indication, Exercise/2 Years Containment Isolation Leak Test Exercise Full Stroke/ Cold Shutdown Operability Test	5 6
LMS-LCV-1000B	C/V reactor coolant drain tank discharge line containment isolation	Remote	Maintain Close Transfer Close	Active-to-Fail Containment Isolation Safety Seat Leakage Remote Position	A	Remote Position Indication, Exercise/2 Years Containment Isolation Leak Test Exercise Full Stroke/ Cold Shutdown Operability Test	5 6
LMS-LCV-1000A	C/V reactor coolant drain tank discharge line containment isolation	Remote	Maintain Close Transfer Close	Active-to-Fail Containment Isolation Safety Seat Leakage Remote Position	A	Remote Position Indication, Exercise/2 Years Containment Isolation Leak Test Exercise Full Stroke/ Cold Shutdown Operability Test	5 6

Table 3.9-14 Valve Inservice Test Requirements (Sheet 104 of 138)

Valve Tag Number	Description	Valve Type	Safety-Related Missions	Safety Functions(2)	ASME IST Category	Inservice Testing Type and Frequency	IST Notes
LMS-AOV-105	C/V sump discharge line containment isolation	Remote	Maintain Close Transfer Close	Active-to-Fail Containment Isolation Safety Seat Leakage Remote Position	A	Remote Position Indication, Exercise/2 Years Containment Isolation Leak Test Exercise Full Stroke/ Cold Shutdown Operability Test	5 6
LMS-AOV-104	C/V sump discharge line containment isolation	Remote	Maintain Close Transfer Close	Active-to-Fail Containment Isolation Safety Seat Leakage Remote Position	A	Remote Position Indication, Exercise/2 Years Containment Isolation Leak Test Exercise Full Stroke/ Cold Shutdown Operability Test	5 6

Table 3.9-14 Valve Inservice Test Requirements (Sheet 105 of 138)

Valve Tag Number	Description	Valve Type	Safety-Related Missions	Safety Functions(2)	ASME IST Category	Inservice Testing Type and Frequency	IST Notes
PSS-AOV-003	Pressurizer gas phase sampling line containment isolation	Remote	Maintain Close Transfer Close	Active-to-Fail Containment Isolation Safety Seat Leakage Remote Position	A	Remote Position Indication, Exercise/2 Years Containment Isolation Leak Test Exercise Full Stroke/ Cold Shutdown Operability Test	5 6
PSS-MOV-006	Pressurizer liquid phase sampling line containment isolation	Remote	Maintain Close Transfer Close	Active Containment Isolation Safety Seat Leakage Remote Position	A	Remote Position Indication, Exercise/2 Years Containment Isolation Leak Test Exercise Full Stroke/ Cold Shutdown Operability Test	5 6

Table 3.9-14 Valve Inservice Test Requirements (Sheet 106 of 138)

Valve Tag Number	Description	Valve Type	Safety-Related Missions	Safety Functions(2)	ASME IST Category	Inservice Testing Type and Frequency	IST Notes
PSS-MOV-013	C-loop hot leg sampling line containment isolation	Remote	Maintain Close Transfer Close	Active Containment Isolation Safety Seat Leakage Remote Position	A	Remote Position Indication, Exercise/2 Years Containment Isolation Leak Test Exercise Full Stroke/ Cold Shutdown Operability Test	5 6
PSS-MOV-023	B-loop hot leg sampling line containment isolation	Remote	Maintain Close Transfer Close	Active Containment Isolation Safety Seat Leakage Remote Position	A	Remote Position Indication, Exercise/2 Years Containment Isolation Leak Test Exercise Full Stroke/ Cold Shutdown Operability Test	5 6

Table 3.9-14 Valve Inservice Test Requirements (Sheet 107 of 138)

Valve Tag Number	Description	Valve Type	Safety-Related Missions	Safety Functions(2)	ASME IST Category	Inservice Testing Type and Frequency	IST Notes
PSS-MOV-031A	Pressurizer and loop sampling line containment isolation	Remote	Maintain Close Transfer Close	Active Containment Isolation Safety Seat Leakage Remote Position	A	Remote Position Indication, Exercise/2 Years Containment Isolation Leak Test Exercise Full Stroke/ Cold Shutdown Operability Test	5 6
PSS-MOV-031B	Loop sampling line containment isolation	Remote	Maintain Close Transfer Close	Active Containment Isolation Safety Seat Leakage Remote Position	A	Remote Position Indication, Exercise/2 Years Containment Isolation Leak Test Exercise Full Stroke/ Cold Shutdown Operability Test	5 6
PSS-MOV-052A	Containment spray/residual heat removal heat exchanger downstream sampling line isolation	Remote	Maintain Close Transfer Close	Active Remote Position	B	Remote Position Indication, Exercise/2 Years Exercise Full Stroke/ Cold Shutdown Operability Test	6

Table 3.9-14 Valve Inservice Test Requirements (Sheet 108 of 138)

Valve Tag Number	Description	Valve Type	Safety-Related Missions	Safety Functions(2)	ASME IST Category	Inservice Testing Type and Frequency	IST Notes
PSS-MOV-052B	Containment spray/residual heat removal heat exchanger downstream sampling line isolation	Remote	Maintain Close Transfer Close	Active Remote Position	B	Remote Position Indication, Exercise/2 Years Exercise Full Stroke/ Cold Shutdown Operability Test	6
PSS-AOV-062A	Accumulator sampling line containment isolation	Remote	Maintain Close Transfer Close	Active-to-Fail Containment Isolation Safety Seat Leakage Remote Position	A	Remote Position Indication, Exercise/2 Years Containment Isolation Leak Test Exercise Full Stroke/ Cold Shutdown Operability Test	5 6
PSS-AOV-062B	Accumulator sampling line containment isolation	Remote	Maintain Close Transfer Close	Active-to-Fail Containment Isolation Safety Seat Leakage Remote Position	A	Remote Position Indication, Exercise/2 Years Containment Isolation Leak Test Exercise Full Stroke/ Cold Shutdown Operability Test	5 6

Table 3.9-14 Valve Inservice Test Requirements (Sheet 109 of 138)

Valve Tag Number	Description	Valve Type	Safety-Related Missions	Safety Functions(2)	ASME IST Category	Inservice Testing Type and Frequency	IST Notes
PSS-AOV-062C	Accumulator sampling line containment isolation	Remote	Maintain Close Transfer Close	Active-to-Fail Containment Isolation Safety Seat Leakage Remote Position	A	Remote Position Indication, Exercise/2 Years Containment Isolation Leak Test Exercise Full Stroke/ Cold Shutdown Operability Test	5 6
PSS-AOV-062D	Accumulator sampling line containment isolation	Remote	Maintain Close Transfer Close	Active-to-Fail Containment Isolation Safety Seat Leakage Remote Position	A	Remote Position Indication, Exercise/2 Years Containment Isolation Leak Test Exercise Full Stroke/ Cold Shutdown Operability Test	5 6

Table 3.9-14 Valve Inservice Test Requirements (Sheet 110 of 138)

Valve Tag Number	Description	Valve Type	Safety-Related Missions	Safety Functions(2)	ASME IST Category	Inservice Testing Type and Frequency	IST Notes
PSS-AOV-063	Accumulator sampling line containment isolation	Remote	Maintain Close Transfer Close	Active-to-Fail Containment Isolation Safety Seat Leakage Remote Position	A	Remote Position Indication, Exercise/2 Years Containment Isolation Leak Test Exercise Full Stroke/ Cold Shutdown Operability Test	5 6
PSS-AOV-071	Post accident sampling return line containment isolation	Remote	Maintain Close Transfer Close	Active-to-Fail Containment Isolation Safety Seat Leakage Remote Position	A	Remote Position Indication, Exercise/2 Years Containment Isolation Leak Test Exercise Full Stroke/ Cold Shutdown Operability Test	5 6
PSS-VLV-072	Post accident sampling return line containment isolation	Check	Maintain Close Transfer Close	Active Containment Isolation Safety Seat Leakage	AC	Containment Isolation Leak Test Check Exercise/Refueling Outage	3 5

Table 3.9-14 Valve Inservice Test Requirements (Sheet 111 of 138)

Valve Tag Number	Description	Valve Type	Safety-Related Missions	Safety Functions(2)	ASME IST Category	Inservice Testing Type and Frequency	IST Notes
SGS-AOV-001A	Steam generator blow down isolation	Remote	Maintain Close Transfer Close	Active-to-Fail Containment Isolation Safety Seat Leakage Remote Position	A	Remote Position Indication, Exercise/2 Years Containment Isolation Leak Test Exercise Full Stroke/ Cold Shutdown Operability Test	5 6
SGS-AOV-001B	Steam generator blow down isolation	Remote	Maintain Close Transfer Close	Active-to-Fail Containment Isolation Safety Seat Leakage Remote Position	A	Remote Position Indication, Exercise/2 Years Containment Isolation Leak Test Exercise Full Stroke/ Cold Shutdown Operability Test	5 6

Table 3.9-14 Valve Inservice Test Requirements (Sheet 112 of 138)

Valve Tag Number	Description	Valve Type	Safety-Related Missions	Safety Functions(2)	ASME IST Category	Inservice Testing Type and Frequency	IST Notes
SGS-AOV-001C	Steam generator blow down isolation	Remote	Maintain Close Transfer Close	Active-to-Fail Containment Isolation Safety Seat Leakage Remote Position	A	Remote Position Indication, Exercise/2 Years Containment Isolation Leak Test Exercise Full Stroke/ Cold Shutdown Operability Test	5 6
SGS-AOV-001D	Steam generator blow down isolation	Remote	Maintain Close Transfer Close	Active-to-Fail Containment Isolation Safety Seat Leakage Remote Position	A	Remote Position Indication, Exercise/2 Years Containment Isolation Leak Test Exercise Full Stroke/ Cold Shutdown Operability Test	5 6
SGS-AOV-002A	Steam generator blow down isolation	Remote	Maintain Close Transfer Close	Active-to-Fail Remote Position	B	Remote Position Indication, Exercise/2 Years Exercise Full Stroke/ Cold Shutdown Operability Test	6

Table 3.9-14 Valve Inservice Test Requirements (Sheet 113 of 138)

Valve Tag Number	Description	Valve Type	Safety-Related Missions	Safety Functions(2)	ASME IST Category	Inservice Testing Type and Frequency	IST Notes
SGS-AOV-002B	Steam generator blow down isolation	Remote	Maintain Close Transfer Close	Active-to-Fail Remote Position	B	Remote Position Indication, Exercise/2 Years Exercise Full Stroke/ Cold Shutdown Operability Test	6
SGS-AOV-002C	Steam generator blow down isolation	Remote	Maintain Close Transfer Close	Active-to-Fail Remote Position	B	Remote Position Indication, Exercise/2 Years Exercise Full Stroke/ Cold Shutdown Operability Test	6
SGS-AOV-002D	Steam generator blow down isolation	Remote	Maintain Close Transfer Close	Active-to-Fail Remote Position	B	Remote Position Indication, Exercise/2 Years Exercise Full Stroke/ Cold Shutdown Operability Test	6

Table 3.9-14 Valve Inservice Test Requirements (Sheet 114 of 138)

Valve Tag Number	Description	Valve Type	Safety-Related Missions	Safety Functions(2)	ASME IST Category	Inservice Testing Type and Frequency	IST Notes
SGS-AOV-031A	Steam generator blow down sampling line isolation	Remote	Maintain Close Transfer Close	Active-to-Fail Containment Isolation Safety Seat Leakage Remote Position	A	Remote Position Indication, Exercise/2 Years Containment Isolation Leak Test Exercise Full Stroke/ Cold Shutdown Operability Test	5 6
SGS-AOV-031B	Steam generator blow down sampling line isolation	Remote	Maintain Close Transfer Close	Active-to-Fail Containment Isolation Safety Seat Leakage Remote Position	A	Remote Position Indication, Exercise/2 Years Containment Isolation Leak Test Exercise Full Stroke/ Cold Shutdown Operability Test	5 6

Table 3.9-14 Valve Inservice Test Requirements (Sheet 115 of 138)

Valve Tag Number	Description	Valve Type	Safety-Related Missions	Safety Functions(2)	ASME IST Category	Inservice Testing Type and Frequency	IST Notes
SGS-AOV-031C	Steam generator blow down sampling line isolation	Remote	Maintain Close Transfer Close	Active-to-Fail Containment Isolation Safety Seat Leakage Remote Position	A	Remote Position Indication, Exercise/2 Years Containment Isolation Leak Test Exercise Full Stroke/ Cold Shutdown Operability Test	5 6
SGS-AOV-031D	Steam generator blow down sampling line isolation	Remote	Maintain Close Transfer Close	Active-to-Fail Containment Isolation Safety Seat Leakage Remote Position	A	Remote Position Indication, Exercise/2 Years Containment Isolation Leak Test Exercise Full Stroke/ Cold Shutdown Operability Test	5 6

Table 3.9-14 Valve Inservice Test Requirements (Sheet 116 of 138)

Valve Tag Number	Description	Valve Type	Safety-Related Missions	Safety Functions(2)	ASME IST Category	Inservice Testing Type and Frequency	IST Notes
RWS-MOV-004	Refueling water storage pit purification line containment isolation	Remote	Maintain Close Transfer Close	Active Containment Isolation Safety Seat Leakage Remote Position	A	Remote Position Indication, Exercise/2 Years Containment Isolation Leak Test Exercise Full Stroke/ Quarterly Operability Test	5
RWS-MOV-002	Refueling water storage pit purification line containment isolation	Remote	Maintain Close Transfer Close	Active-to-Fail Containment Isolation Safety Seat Leakage Remote Position	A	Remote Position Indication, Exercise/2 Years Containment Isolation Leak Test Exercise Full Stroke/ Quarterly Operability Test	5

Table 3.9-14 Valve Inservice Test Requirements (Sheet 117 of 138)

Valve Tag Number	Description	Valve Type	Safety-Related Missions	Safety Functions(2)	ASME IST Category	Inservice Testing Type and Frequency	IST Notes
RWS-AOV-022	Refueling water storage pit purification return line containment isolation	Remote	Maintain Close Transfer Close	Active-to-Fail Containment Isolation Safety Seat Leakage Remote Position	A	Remote Position Indication, Exercise/2 Years Containment Isolation Leak Test Exercise Full Stroke/ Quarterly Operability Test	5
RWS-VLV-023	Refueling water storage pit purification return line containment isolation	Check	Maintain Close Transfer Close	Active Containment Isolation Safety Seat Leakage Remote Position	AC	Containment Isolation Leak Test Check Exercise/ Refueling Outage	3 5
DWS-VLV-004	Demineralized water supply containment isolation	Manual	Maintain Close	Passive Containment Isolation Safety Seat Leakage	A	Containment Isolation Leak Test	5

Table 3.9-14 Valve Inservice Test Requirements (Sheet 118 of 138)

Valve Tag Number	Description	Valve Type	Safety-Related Missions	Safety Functions(2)	ASME IST Category	Inservice Testing Type and Frequency	IST Notes
DWS-VLV-005	Demineralized water supply containment isolation check	Check	Maintain Close	Passive Containment Isolation Safety Seat Leakage	AC	Containment Isolation Leak Test	3 5
CAS-MOV-002	Instrument air supply outside containment isolation	Remote	Maintain Close Transfer Close	Active Containment Isolation Safety Seat Leakage Remote Position	A	Remote Position Indication, Exercise/2 Years Containment Isolation Leak Test Exercise Full Stroke/Refueling Outage Operability Test	5 6

Table 3.9-14 Valve Inservice Test Requirements (Sheet 119 of 138)

Valve Tag Number	Description	Valve Type	Safety-Related Missions	Safety Functions(2)	ASME IST Category	Inservice Testing Type and Frequency	IST Notes
CAS-VLV-003	Instrument air supply containment isolation	Check	Maintain Close Transfer Close	Active Containment Isolation Safety Seat Leakage	AC	Containment Isolation Leak Test Check Exercise/Refueling Outage	3 5
CAS-VLV-101	Station service air supply line containment isolation	Manual	Maintain Close	Containment Isolation Safety Seat Leakage	A	Containment Isolation Leak Test	5

Table 3.9-14 Valve Inservice Test Requirements (Sheet 120 of 138)

Valve Tag Number	Description	Valve Type	Safety-Related Missions	Safety Functions(2)	ASME IST Category	Inservice Testing Type and Frequency	IST Notes
CAS-VLV-103	Station service air supply line containment isolation check	Check	Maintain Close	Containment Isolation Safety Seat Leakage	AC	Containment Isolation Leak Test	5
IGS-AOV-001	ICIGS line containment isolation	Remote	Maintain Close Transfer Close	Active-to-Fail Containment Isolation Safety Seat Leakage Remote Position	A	Remote Position Indication, Exercise/2 Years Containment Isolation Leak Test Exercise Full Stroke/ Cold Shut down Operability Test	5 6
IGS-AOV-002	ICIGS line containment isolation	Remote	Maintain Close Transfer Close	Active-to-Fail Containment Isolation Safety Seat Leakage Remote Position	A	Remote Position Indication, Exercise/2 Years Containment Isolation Leak Test Exercise Full Stroke/ Cold Shut down Operability Test	5 6

Table 3.9-14 Valve Inservice Test Requirements (Sheet 121 of 138)

Valve Tag Number	Description	Valve Type	Safety-Related Missions	Safety Functions(2)	ASME IST Category	Inservice Testing Type and Frequency	IST Notes
LTS-VLV-001	LRTS line containment isolation	Manual	Maintain Close	Containment Isolation Safety Seat Leakage	A	Containment Isolation Leak Test	5
LTS-VLV-002	LRTS line containment isolation	Manual	Maintain Close	Containment Isolation Safety Seat Leakage	A	Containment Isolation Leak Test	5
FSS-AOV-001	FPWSS line to filter unit containment isolation	Remote	Maintain Close Transfer Close	Active-to-Fail Containment Isolation Safety Seat Leakage Remote Position	A	Remote Position Indication, Exercise/ 2 Years Containment Isolation Leak Test Exercise Full Stroke/ Cold Shut down Operability Test	5 6
FSS-VLV-003	FPWSS line to filter unit containment Isolation check	Check	Maintain Close Transfer Close	Active Containment Isolation Safety Seat Leakage	AC	Containment Isolation Leak Test Check Exercise/ Refueling Outage	3 5
FSS-MOV-004	FPWSS line to reactor cavity containment isolation	Remote	Maintain Close	Containment Isolation Safety Seat Leakage	A	Containment Isolation Leak Test	5

Table 3.9-14 Valve Inservice Test Requirements (Sheet 122 of 138)

Valve Tag Number	Description	Valve Type	Safety-Related Missions	Safety Functions(2)	ASME IST Category	Inservice Testing Type and Frequency	IST Notes
FSS-VLV-006	FPWSS line to reactor cavity containment isolation check	Check	Maintain Close	Containment Isolation Safety Seat Leakage	AC	Containment Isolation Leak Test	5
VCS-AOV-304	Containment High Volume Purge Supply Line Containment Isolation Outside of CV	Remote	Maintain Close Transfer Close	Active-to-Failed Containment Isolation Safety Seat Leakage Remote Position	A	Remote Position Indication, Exercise/2 Years Containment Isolation Leak Test Exercise Full Stroke/ Cold Shutdown Operability Test	5
VCS-AOV-305	Containment High Volume Purge Supply Line Containment Isolation Inside of CV	Remote	Maintain Close Transfer Close	Active-to-Failed Containment Isolation Safety Seat Leakage Remote Position	A	Remote Position Indication, Exercise/ 2 Years Containment Isolation Leak Test Exercise Full Stroke/ Cold Shutdown Operability Test	5

Table 3.9-14 Valve Inservice Test Requirements (Sheet 123 of 138)

Valve Tag Number	Description	Valve Type	Safety-Related Missions	Safety Functions(2)	ASME IST Category	Inservice Testing Type and Frequency	IST Notes
VCS-AOV-306	Containment High Volume Purge Exhaust Line Containment Isolation Inside of CV	Remote	Maintain Close Transfer Close	Active-to-Failed Containment Isolation Safety Seat Leakage Remote Position	A	Remote Position Indication, Exercise/2 Years Containment Isolation Leak Test Exercise Full Stroke/ Cold Shutdown Operability Test	5
VCS-AOV-307	Containment High Volume Purge Exhaust Line Containment Isolation Outside of CV	Remote	Maintain Close Transfer Close	Active-to-Failed Containment Isolation Safety Seat Leakage Remote Position	A	Remote Position Indication, Exercise/2 Years Containment Isolation Leak Test Exercise Full Stroke/ Cold Shutdown Operability Test	5
VCS-AOV-354	Containment Low Volume Purge Supply Line Containment Isolation Outside of CV	Remote	Maintain Close Transfer Close	Active-to-Failed Containment Isolation Safety Seat Leakage Remote Position	A	Remote Position Indication, Exercise/2 Years Containment Isolation Leak Test Exercise Full Stroke/ Cold Shutdown Operability Test	5

Table 3.9-14 Valve Inservice Test Requirements (Sheet 124 of 138)

Valve Tag Number	Description	Valve Type	Safety-Related Missions	Safety Functions(2)	ASME IST Category	Inservice Testing Type and Frequency	IST Notes
VCS-AOV-355	Containment Low Volume Purge Supply Line Containment Isolation Inside of CV	Remote	Maintain Close Transfer Close	Active-to-Failed Containment Isolation Safety Seat Leakage Remote Position	A	Remote Position Indication, Exercise/2 Years Containment Isolation Leak Test Exercise Full Stroke/ Cold Shutdown Operability Test	5
VCS-AOV-356	Containment Low Volume Purge Exhaust Line Containment Isolation Inside of CV	Remote	Maintain Close Transfer Close	Active-to-Failed Containment Isolation Safety Seat Leakage Remote Position	A	Remote Position Indication, Exercise/2 Years Containment Isolation Leak Test Exercise Full Stroke/ Cold Shutdown Operability Test	5
VCS-AOV-357	Containment Low Volume Purge Exhaust Line Containment Isolation Outside of CV	Remote	Maintain Close Transfer Close	Active-to-Failed Containment Isolation Safety Seat Leakage Remote Position	A	Remote Position Indication, Exercise/2 Years Containment Isolation Leak Test Exercise Full Stroke/ Cold Shutdown Operability Test	5

Table 3.9-14 Valve Inservice Test Requirements (Sheet 125 of 138)

Valve Tag Number	Description	Valve Type	Safety-Related Missions	Safety Functions(2)	ASME IST Category	Inservice Testing Type and Frequency	IST Notes
VWS-TCV-2845	Main Control Room Air Handling Unit Cooling Coil Chilled Water Control	Remote	Transfer Open Transfer Close	Active Remote Position	B	Remote Position Indication, Exercise/2 Years Exercise Full Stroke/Cold Shutdown Operability Test	6
VWS-TCV-2855	Main Control Room Air Handling Unit Cooling Coil Chilled Water Control	Remote	Transfer Open Transfer Close	Active Remote Position	B	Remote Position Indication, Exercise/2 Years Exercise Full Stroke/Cold Shutdown Operability Test	6
VWS-TCV-2865	Main Control Room Air Handling Unit Cooling Coil Chilled Water Control	Remote	Transfer Open Transfer Close	Active Remote Position	B	Remote Position Indication, Exercise/2 Years Exercise Full Stroke/Cold Shutdown Operability Test	6
VWS-TCV-2875	Main Control Room Air Handling Unit Cooling Coil Chilled Water Control	Remote	Transfer Open Transfer Close	Active Remote Position	B	Remote Position Indication, Exercise/2 Years Exercise Full Stroke/Cold Shutdown Operability Test	6

Table 3.9-14 Valve Inservice Test Requirements (Sheet 126 of 138)

Valve Tag Number	Description	Valve Type	Safety-Related Missions	Safety Functions(2)	ASME IST Category	Inservice Testing Type and Frequency	IST Notes
VWS-TCV-2784	Class 1E Electrical Room Air Handling Unit Cooling Coil Chilled Water Control	Remote	Transfer Open Transfer Close	Active Remote Position	B	Remote Position Indication, Exercise/2 Years Exercise Full Stroke/Cold Shutdown Operability Test	6
VWS-TCV-2794	Class 1E Electrical Room Air Handling Unit Cooling Coil Chilled Water Control	Remote	Transfer Open Transfer Close	Active Remote Position	B	Remote Position Indication, Exercise/2 Years Exercise Full Stroke/Cold Shutdown Operability Test	6
VWS-TCV-2804	Class 1E Electrical Room Air Handling Unit Cooling Coil Chilled Water Control	Remote	Transfer Open Transfer Close	Active Remote Position	B	Remote Position Indication, Exercise/2 Years Exercise Full Stroke/Cold Shutdown Operability Test	6
VWS-TCV-2814	Class 1E Electrical Room Air Handling Unit Cooling Coil Chilled Water Control	Remote	Transfer Open Transfer Close	Active Remote Position	B	Remote Position Indication, Exercise/2 Years Exercise Full Stroke/Cold Shutdown Operability Test	6

Table 3.9-14 Valve Inservice Test Requirements (Sheet 127 of 138)

Valve Tag Number	Description	Valve Type	Safety-Related Missions	Safety Functions(2)	ASME IST Category	Inservice Testing Type and Frequency	IST Notes
VWS-TCV-2574	Safeguard Component Area Air Handling Unit Cooling Coil Chilled Water Control	Remote	Transfer Open Transfer Close	Active Remote Position	B	Remote Position Indication, Exercise/2 Years Exercise Full Stroke/Cold Shutdown Operability Test	
VWS-TCV-2584	Safeguard Component Area Air Handling Unit Cooling Coil Chilled Water Control	Remote	Transfer Open Transfer Close	Active Remote Position	B	Remote Position Indication, Exercise/2 Years Exercise Full Stroke/Cold Shutdown Operability Test	
VWS-TCV-2594	Safeguard Component Area Air Handling Unit Cooling Coil Chilled Water Control	Remote	Transfer Open Transfer Close	Active Remote Position	B	Remote Position Indication, Exercise/2 Years Exercise Full Stroke/Cold Shutdown Operability Test	
VWS-TCV-2604	Safeguard Component Area Air Handling Unit Cooling Coil Chilled Water Control	Remote	Transfer Open Transfer Close	Active Remote Position	B	Remote Position Indication, Exercise/2 Years Exercise Full Stroke/Cold Shutdown Operability Test	

Table 3.9-14 Valve Inservice Test Requirements (Sheet 128 of 138)

Valve Tag Number	Description	Valve Type	Safety-Related Missions	Safety Functions(2)	ASME IST Category	Inservice Testing Type and Frequency	IST Notes
VWS-TCV-2671	Emergency Feedwater Pump Area Air Handling Unit Cooling Coil Chilled Water Control	Remote	Transfer Open Transfer Close	Active Remote Position	B	Remote Position Indication, Exercise/2 Years Exercise Full Stroke/Cold Shutdown Operability Test	
VWS-TCV-2676	Emergency Feedwater Pump Area Air Handling Unit Cooling Coil Chilled Water Control	Remote	Transfer Open Transfer Close	Active Remote Position	B	Remote Position Indication, Exercise/2 Years Exercise Full Stroke/Cold Shutdown Operability Test	
VWS-TCV-2681	Emergency Feedwater Pump Area Air Handling Unit Cooling Coil Chilled Water Control	Remote	Transfer Open Transfer Close	Active Remote Position	B	Remote Position Indication, Exercise/2 Years Exercise Full Stroke/Cold Shutdown Operability Test	

Table 3.9-14 Valve Inservice Test Requirements (Sheet 129 of 138)

Valve Tag Number	Description	Valve Type	Safety-Related Missions	Safety Functions(2)	ASME IST Category	Inservice Testing Type and Frequency	IST Notes
VWS-TCV-2686	Emergency Feedwater Pump Area Air Handling Unit Cooling Coil Chilled Water Control	Remote	Transfer Open Transfer Close	Active Remote Position	B	Remote Position Indication, Exercise/2 Years Exercise Full Stroke/Cold Shutdown Operability Test	
VWS-TCV-2721A	Component Cooling Water Pump Area Air Handling Unit Cooling Coil Chilled Water Control	Remote	Transfer Open Transfer Close	Active Remote Position	B	Remote Position Indication, Exercise/2 Years Exercise Full Stroke/Cold Shutdown Operability Test	
VWS-TCV-2721B	Component Cooling Water Pump Area Air Handling Unit Cooling Coil Chilled Water Control	Remote	Transfer Open Transfer Close	Active Remote Position	B	Remote Position Indication, Exercise/2 Years Exercise Full Stroke/Cold Shutdown Operability Test	

Table 3.9-14 Valve Inservice Test Requirements (Sheet 130 of 138)

Valve Tag Number	Description	Valve Type	Safety-Related Missions	Safety Functions(2)	ASME IST Category	Inservice Testing Type and Frequency	IST Notes
VWS-TCV-2721C	Component Cooling Water Pump Area Air Handling Unit Cooling Coil Chilled Water Control	Remote	Transfer Open Transfer Close	Active Remote Position	B	Remote Position Indication, Exercise/2 Years Exercise Full Stroke/Cold Shutdown Operability Test	
VWS-TCV-2721D	Component Cooling Water Pump Area Air Handling Unit Cooling Coil Chilled Water Control	Remote	Transfer Open Transfer Close	Active Remote Position	B	Remote Position Indication, Exercise/2 Years Exercise Full Stroke/Cold Shutdown Operability Test	
VWS-TCV-2726A	Essential Chiller Unit Area Air Handling Unit Cooling Coil Chilled Water Control	Remote	Transfer Open Transfer Close	Active Remote Position	B	Remote Position Indication, Exercise/2 Years Exercise Full Stroke/Cold Shutdown Operability Test	
VWS-TCV-2726B	Essential Chiller Unit Area Air Handling Unit Cooling Coil Chilled Water Control	Remote	Transfer Open Transfer Close	Active Remote Position	B	Remote Position Indication, Exercise/2 Years Exercise Full Stroke/Cold Shutdown Operability Test	

Table 3.9-14 Valve Inservice Test Requirements (Sheet 131 of 138)

Valve Tag Number	Description	Valve Type	Safety-Related Missions	Safety Functions(2)	ASME IST Category	Inservice Testing Type and Frequency	IST Notes
VWS-TCV-2726C	Essential Chiller Unit Area Air Handling Unit Cooling Coil Chilled Water Control	Remote	Transfer Open Transfer Close	Active Remote Position	B	Remote Position Indication, Exercise/2 Years Exercise Full Stroke/Cold Shutdown Operability Test	
VWS-TCV-2726D	Essential Chiller Unit Area Air Handling Unit Cooling Coil Chilled Water Control	Remote	Transfer Open Transfer Close	Active Remote Position	B	Remote Position Indication, Exercise/2 Years Exercise Full Stroke/Cold Shutdown Operability Test	
VWS-TCV-2731	Charging Pump Area Air Handling Unit Cooling Coil Chilled Water Control	Remote	Transfer Open Transfer Close	Active Remote Position	B	Remote Position Indication, Exercise/2 Years Exercise Full Stroke/Cold Shutdown Operability Test	
(Deleted)							
VWS-TCV-2736	Charging Pump Area Air Handling Unit Cooling Coil Chilled Water Control	Remote	Transfer Open Transfer Close	Active Remote Position	B	Remote Position Indication, Exercise/2 Years Exercise Full Stroke/Cold Shutdown Operability Test	
(Deleted)							

Table 3.9-14 Valve Inservice Test Requirements (Sheet 132 of 138)

Valve Tag Number	Description	Valve Type	Safety-Related Missions	Safety Functions(2)	ASME IST Category	Inservice Testing Type and Frequency	IST Notes
VWS-TCV-2741A	Annulus Emergency Exhaust Filtration Unit Area Air Handling Unit Cooling Coil Chilled Water Control	Remote	Transfer Open Transfer Close	Active Remote Position	B	Remote Position Indication, Exercise/2 Years Exercise Full Stroke/Cold Shutdown Operability Test	
VWS-TCV-2741B	Annulus Emergency Exhaust Filtration Unit Area Air Handling Unit Cooling Coil Chilled Water Control	Remote	Transfer Open Transfer Close	Active Remote Position	B	Remote Position Indication, Exercise/2 Years Exercise Full Stroke/Cold Shutdown Operability Test	
VWS-TCV-2746A	Annulus Emergency Exhaust Filtration Unit Area Air Handling Unit Cooling Coil Chilled Water Control	Remote	Transfer Open Transfer Close	Active Remote Position	B	Remote Position Indication, Exercise/2 Years Exercise Full Stroke/Cold Shutdown Operability Test	

Table 3.9-14 Valve Inservice Test Requirements (Sheet 133 of 138)

Valve Tag Number	Description	Valve Type	Safety-Related Missions	Safety Functions(2)	ASME IST Category	Inservice Testing Type and Frequency	IST Notes
VWS-TCV-2746B	Annulus Emergency Exhaust Filtration Unit Area Air Handling Unit Cooling Coil Chilled Water Control	Remote	Transfer Open Transfer Close	Active Remote Position	B	Remote Position Indication, Exercise/2 Years Exercise Full Stroke/Cold Shutdown Operability Test	
VWS-TCV-2331	Penetration Area Air Handling Unit Cooling Coil Chilled Water Control	Remote	Transfer Open Transfer Close	Active Remote Position	B	Remote Position Indication, Exercise/2 Years Exercise Full Stroke/Cold Shutdown Operability Test	
VWS-TCV-2336	Penetration Area Air Handling Unit Cooling Coil Chilled Water Control	Remote	Transfer Open Transfer Close	Active Remote Position	B	Remote Position Indication, Exercise/2 Years Exercise Full Stroke/Cold Shutdown Operability Test	
VWS-TCV-2341	Penetration Area Air Handling Unit Cooling Coil Chilled Water Control	Remote	Transfer Open Transfer Close	Active Remote Position	B	Remote Position Indication, Exercise/2 Years Exercise Full Stroke/Cold Shutdown Operability Test	

Table 3.9-14 Valve Inservice Test Requirements (Sheet 134 of 138)

Valve Tag Number	Description	Valve Type	Safety-Related Missions	Safety Functions(2)	ASME IST Category	Inservice Testing Type and Frequency	IST Notes
VWS-TCV-2346	Penetration Area Air Handling Unit Cooling Coil Chilled Water Control	Remote	Transfer Open Transfer Close	Active Remote Position	B	Remote Position Indication, Exercise/2 Years Exercise Full Stroke/Cold Shutdown Operability Test	
VWS-VLV-005A	Essential Chilled Water Pump Discharge Check	Check	Maintain Open Transfer Open Transfer Close	Active	BC	Check Exercise/ Refueling Outage	3
VWS-VLV-005B	Essential Chilled Water Pump Discharge Check	Check	Maintain Open Transfer Open Transfer Close	Active	BC	Check Exercise/ Refueling Outage	3
VWS-VLV-005C	Essential Chilled Water Pump Discharge Check	Check	Maintain Open Transfer Open Transfer Close	Active	BC	Check Exercise/ Refueling Outage	3
VWS-VLV-005D	Essential Chilled Water Pump Discharge Check	Check	Maintain Open Transfer Open Transfer Close	Active	BC	Check Exercise/ Refueling Outage	3
VWS-VLV-253A	Essential Chilled Water Compression Tank Relief	Relief	Maintain Close Transfer Open Transfer Close	Active	BC	Class 2/3 Relief Valve Tests/10 Years and 20% in 4 Years	

Table 3.9-14 Valve Inservice Test Requirements (Sheet 135 of 138)

Valve Tag Number	Description	Valve Type	Safety-Related Missions	Safety Functions(2)	ASME IST Category	Inservice Testing Type and Frequency	IST Notes
VWS-VLV-253B	Essential Chilled Water Compression Tank Relief	Relief	Maintain Close Transfer Open Transfer Close	Active	BC	Class 2/3 Relief Valve Tests/10 Years and 20% in 4 Years	
VWS-VLV-253C	Essential Chilled Water Compression Tank Relief	Relief	Maintain Close Transfer Open Transfer Close	Active	BC	Class 2/3 Relief Valve Tests/10 Years and 20% in 4 Years	
VWS-VLV-253D	Essential Chilled Water Compression Tank Relief	Relief	Maintain Close Transfer Open Transfer Close	Active	BC	Class 2/3 Relief Valve Tests/10 Years and 20% in 4 Years	
VWS-MOV-403	Containment Fan Cooler Chilled Water Inlet Containment Isolation Outside of CV	Remote	Maintain Close Transfer Close	Active Containment Isolation Safety Seat Leakage Remote Position	A	Remote Position Indication, Exercise/2 Years Containment Isolation Leak Test Exercise Full Stroke/ Cold Shutdown Operability Test	5 6

Table 3.9-14 Valve Inservice Test Requirements (Sheet 136 of 138)

Valve Tag Number	Description	Valve Type	Safety-Related Missions	Safety Functions(2)	ASME IST Category	Inservice Testing Type and Frequency	IST Notes
VWS-MOV-407	Containment Fan Cooler Chilled Water Outlet Containment Isolation Outside of CV	Remote	Maintain Close Transfer Close	Active Containment Isolation Safety Seat Leakage Remote Position	A	Remote Position Indication, Exercise/2 Years Containment Isolation Leak Test Exercise Full Stroke/ Cold Shutdown Operability Test	5 6
RMS-MOV-001	Containment Air Sampling Line Containment Isolation Inside of CV	Remote	Maintain Close Transfer Close	Active Containment Isolation Safety Seat Leakage Remote Position	A	Remote Position Indication, Exercise/2 Years Containment Isolation Leak Test Exercise Full Stroke/ Cold Shutdown Operability Test	5 6
RMS-MOV-002	Containment Air Sampling Line Containment Isolation Outside of CV	Remote	Maintain Close Transfer Close	Active Containment Isolation Safety Seat Leakage Remote Position	A	Remote Position Indication, Exercise/2 Years Containment Isolation Leak Test Exercise Full Stroke/ Cold Shutdown Operability Test	5 6

Table 3.9-14 Valve Inservice Test Requirements (Sheet 137 of 138)

Valve Tag Number	Description	Valve Type	Safety-Related Missions	Safety Functions(2)	ASME IST Category	Inservice Testing Type and Frequency	IST Notes
RMS-MOV-003	Containment Air Sampling Return Line Containment Isolation Outside of CV	Remote	Maintain Close Transfer Close	Active Containment Isolation Safety Seat Leakage Remote Position	A	Remote Position Indication, Exercise/2 Years Containment Isolation Leak Test Exercise Full Stroke/ Cold Shutdown Operability Test	5 6
RMS-VLV-005	Containment Air Sampling Return Line Containment Isolation Check Inside of CV	Check	Maintain Close Transfer Close	Active Containment Isolation Safety Seat Leakage	AC	Containment Isolation Leak Test Check Exercise/ Refueling Outage	3 5

Notes:

1. This note applies to the pressurizer safety valves and to the main steam safety valves. Since these valves are not exercised for in service testing, their position indication sensors are tested by local inspection without valve exercise.
2. These valves are normally closed to maintain the reactor coolant system pressure boundary. These valves are tested during cold shutdowns when the reactor coolant system pressure is reduced to atmospheric pressure so that an opening of this valve during this IST will not cause a LOCA.
3. The check valve exercise test is performed during refueling outage. Valves in the inaccessible primary containment can not be tested during power operation. Test of valves in operating systems may cause impact of power operation. Simultaneous testing of valves in the same system group will be considered.
4. Test of these valves at power will result in an undesirable transient on the reactor coolant system or the steam generator secondary system. Therefore, exercise testing will be performed at cold shutdown to avoid impact on power operation.
5. Containment isolation valves leakage test frequency will be conducted in accordance with the " primary containment leakage rate test program" in accordance with 10 CFR 50 Appendix J.

Table 3.9-14 Valve Inservice Test Requirements
(Sheet 138 of 138)

6. Exercising these valves would stop necessary line for operation such as utilities etc. Therefore, exercise testing will be performed at cold shutdown to avoid impact on power operation.
7. Exercising these valves would stop seal injection/ return water or cooling water of the reactor coolant pumps. Such stop of water may result in damage to the reactor coolant pump or reactor trip. These valves are exercised during cold shutdowns when these components do not require the water flow.
8. These valves isolate the low pressure system from the high pressure the reactor coolant system. Opening during normal operation may result in damage of equipment or reactor trip. These valves are exercised during cold shutdowns.
9. Exercising these valves during power operation would cause a loss of necessary safety function for power operation that needs big efforts to recover it. These valves will be exercised during cold shutdowns.
10. The residual heat removal system hot leg suction containment isolation valves and cold leg discharge containment isolation valves are not containment isolation leak tested.
    The basis for the exception is:
    -The valve is water sealed with recirculation water during post-accident operations which prevents the release of the containment atmosphere radioactive gas or aerosol.
    -The residual heat removal system are a closed loop system, seismically-designed and designed as Quality Group B with a portion of outside containment
    -The residual heat removal system valves are closed when the plant is in modes above hot shutdown
11. This note applies to the main steam isolation valves and main feed water isolation valves. The valves are not full stroke tested quarterly at power since full valve stroking will result in a plant transient during normal power operation. These valves will be exercised during cold shutdown.
12. Full-stroke exercise of accumulator injection line check valves, containment spray header containment isolation check valves, main steam check valves, and turbine driven emergency feedwater pump steam supply line drain line check valves can not be practically established. Those valves are tested by alternative method (disassembly) during refueling outage as described in the Generic Letter 89-04.
13. Exercising these valves during power operation would cause a loss of necessary safety function for power operation that needs big efforts to recover it. These valves will be exercised during hot shutdown before cooling down for refueling outage.

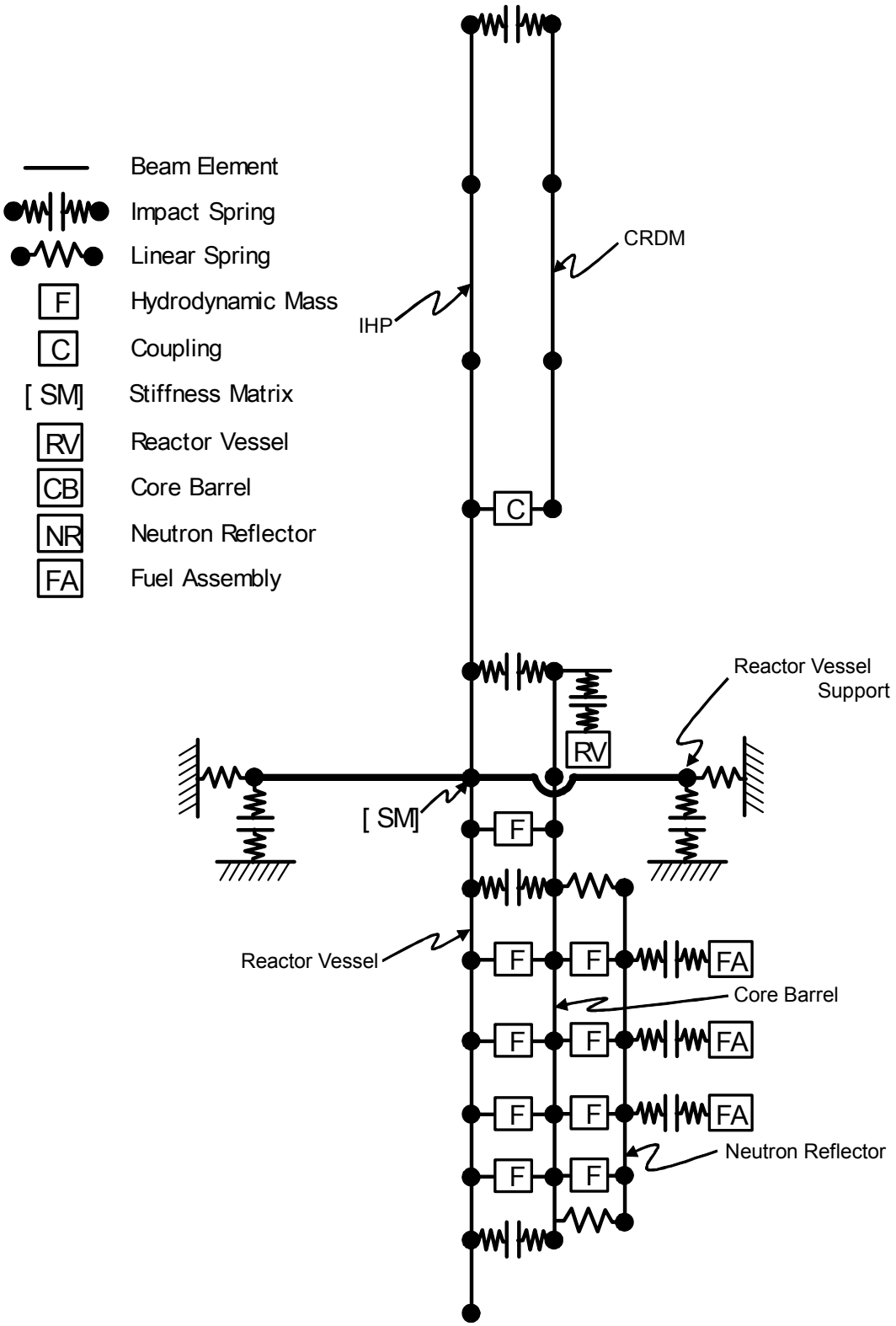

Figure 3.9-1 Typical Mathematical Model of the Reactor Internals for the Seismic and LOCA Dynamic Analysis (RV, Lower Reactor Internals and CRDM)

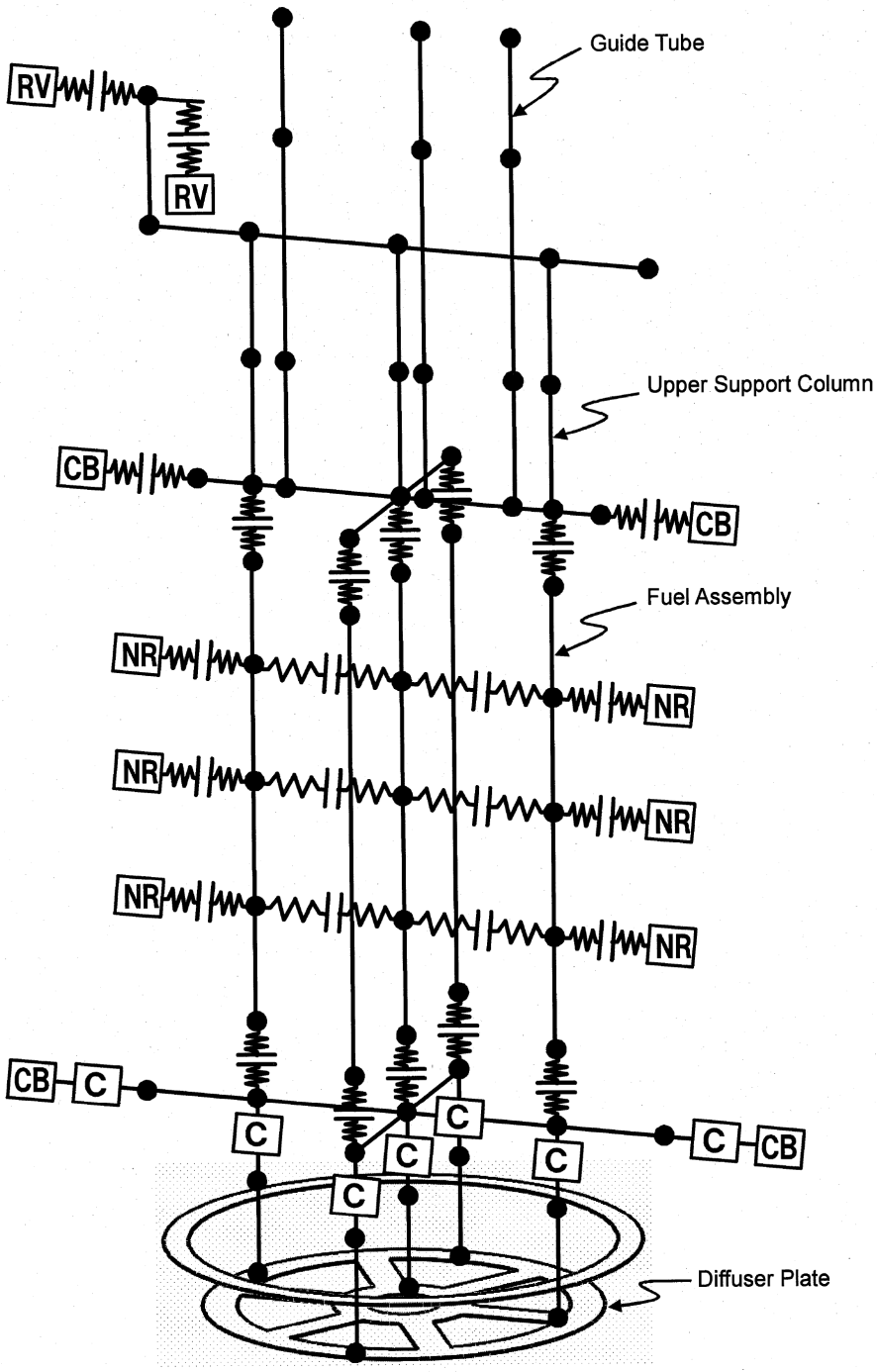

Figure 3.9-2 Typical Mathematical Model for the Seismic and LOCA Dynamic Analysis (Fuel Assembly, Upper Reactor Internals and Diffuser Plate)

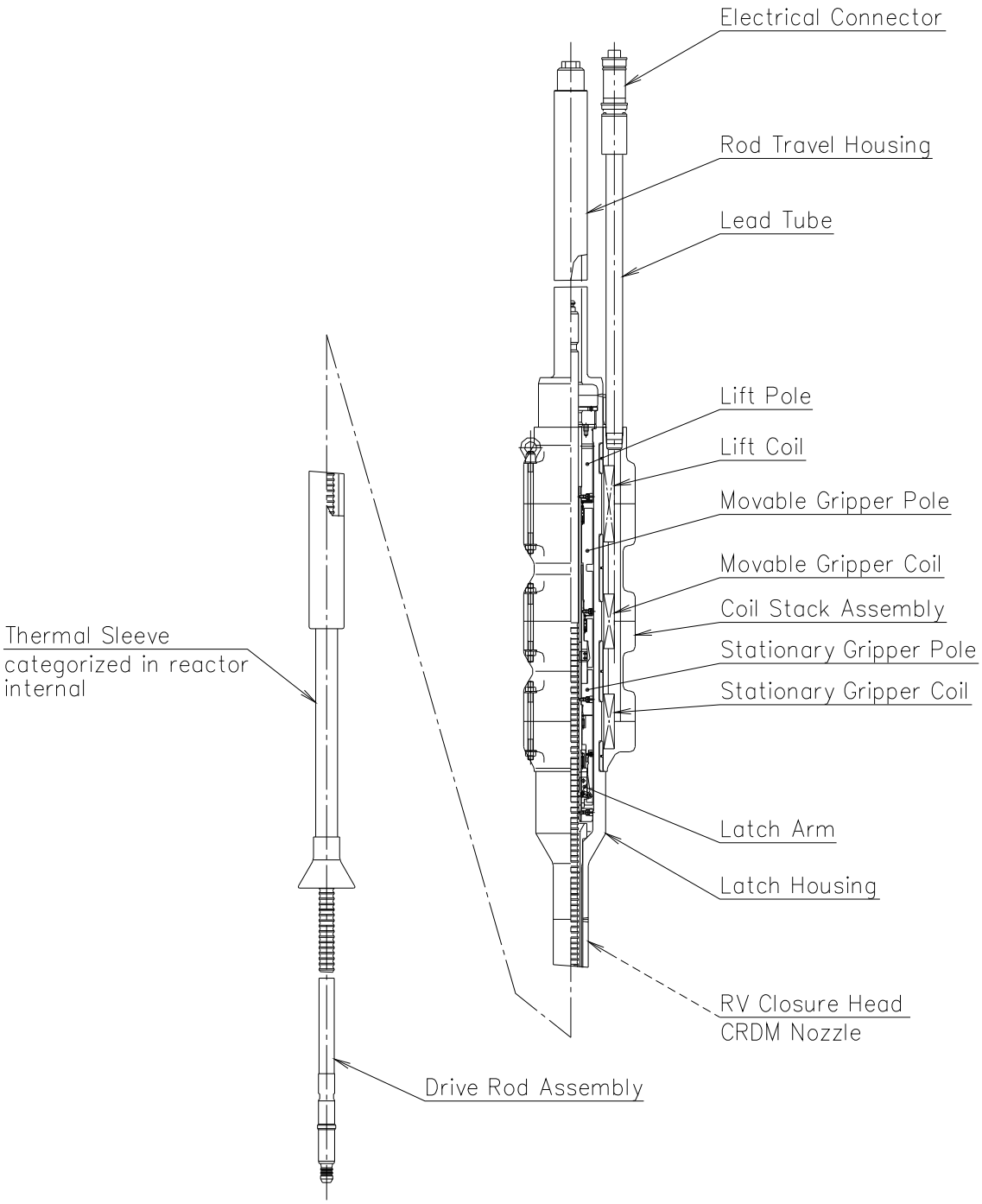

Figure 3.9-3 CRDM

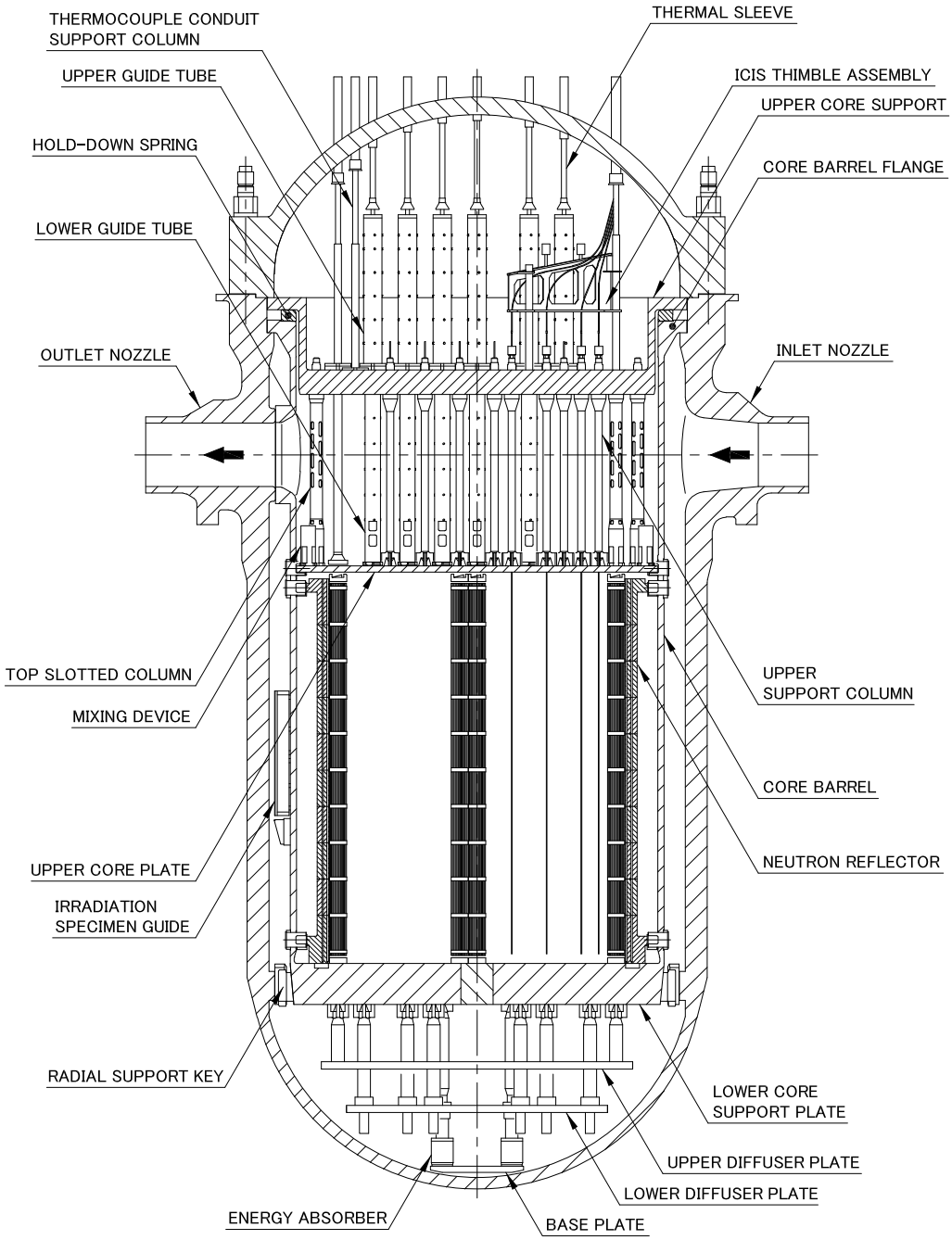

Figure 3.9-4 Reactor Internals General Arrangement

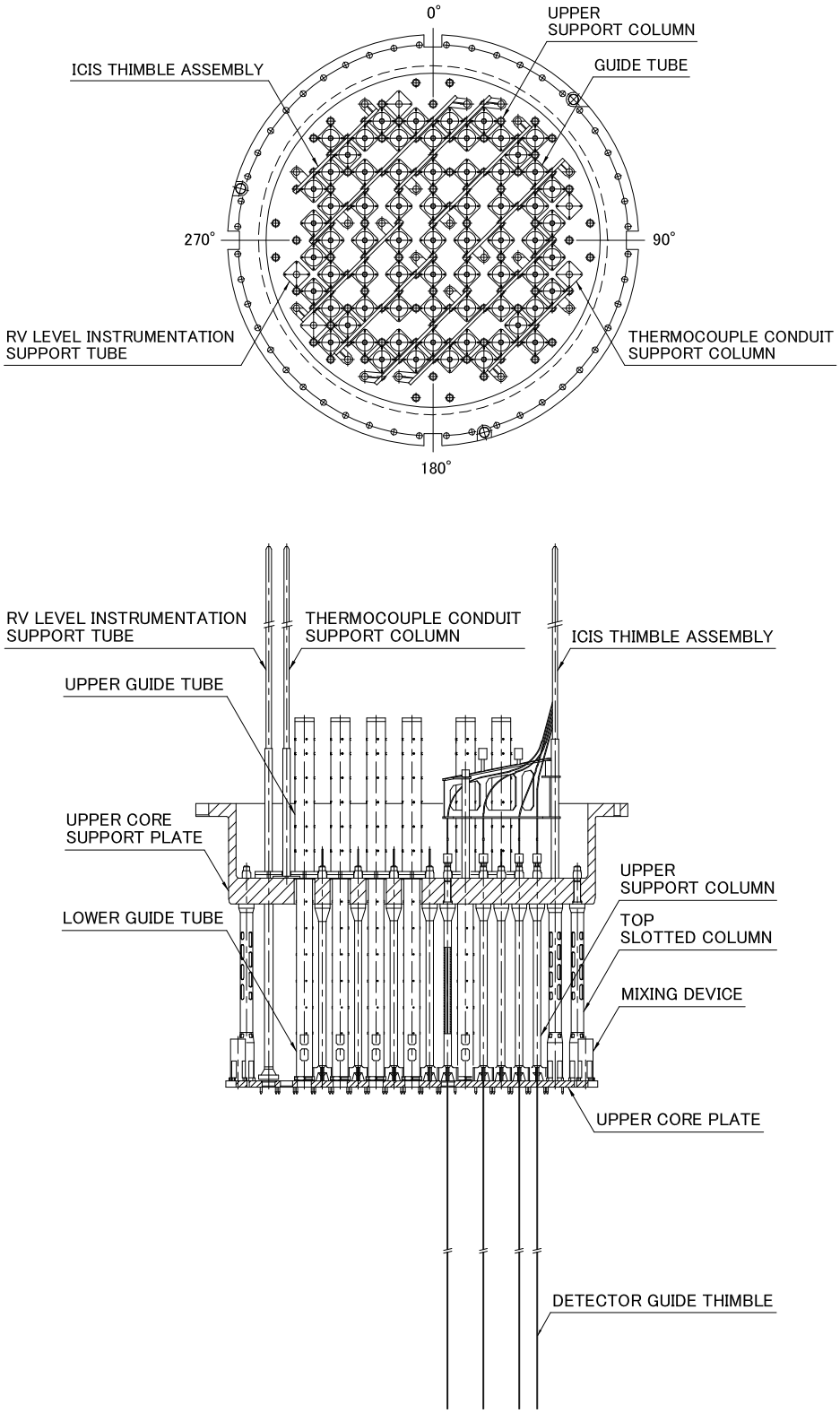

Figure 3.9-5 Upper Reactor Internals Assembly

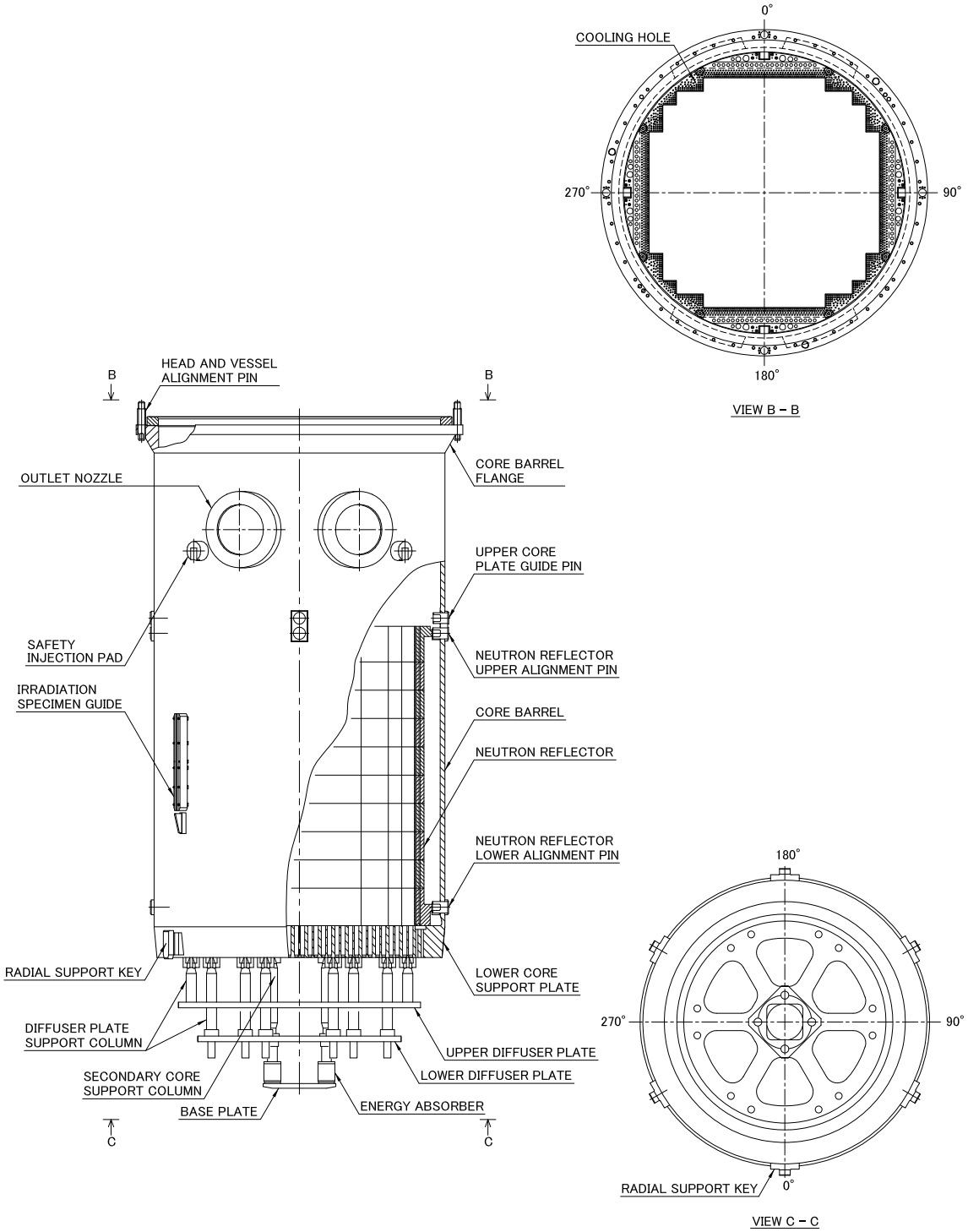

Figure 3.9-6 Lower Reactor Internals Assembly

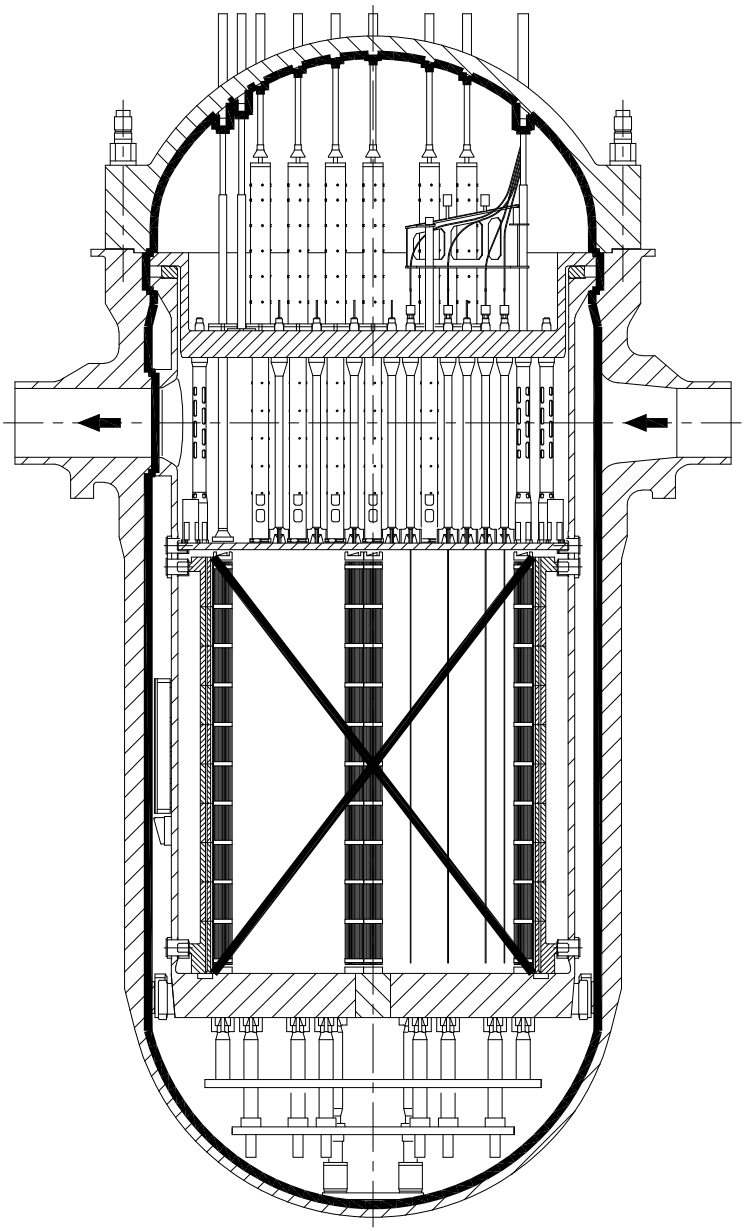

Figure 3.9-7 Jurisdictional Boundary between Reactor Internals and RV

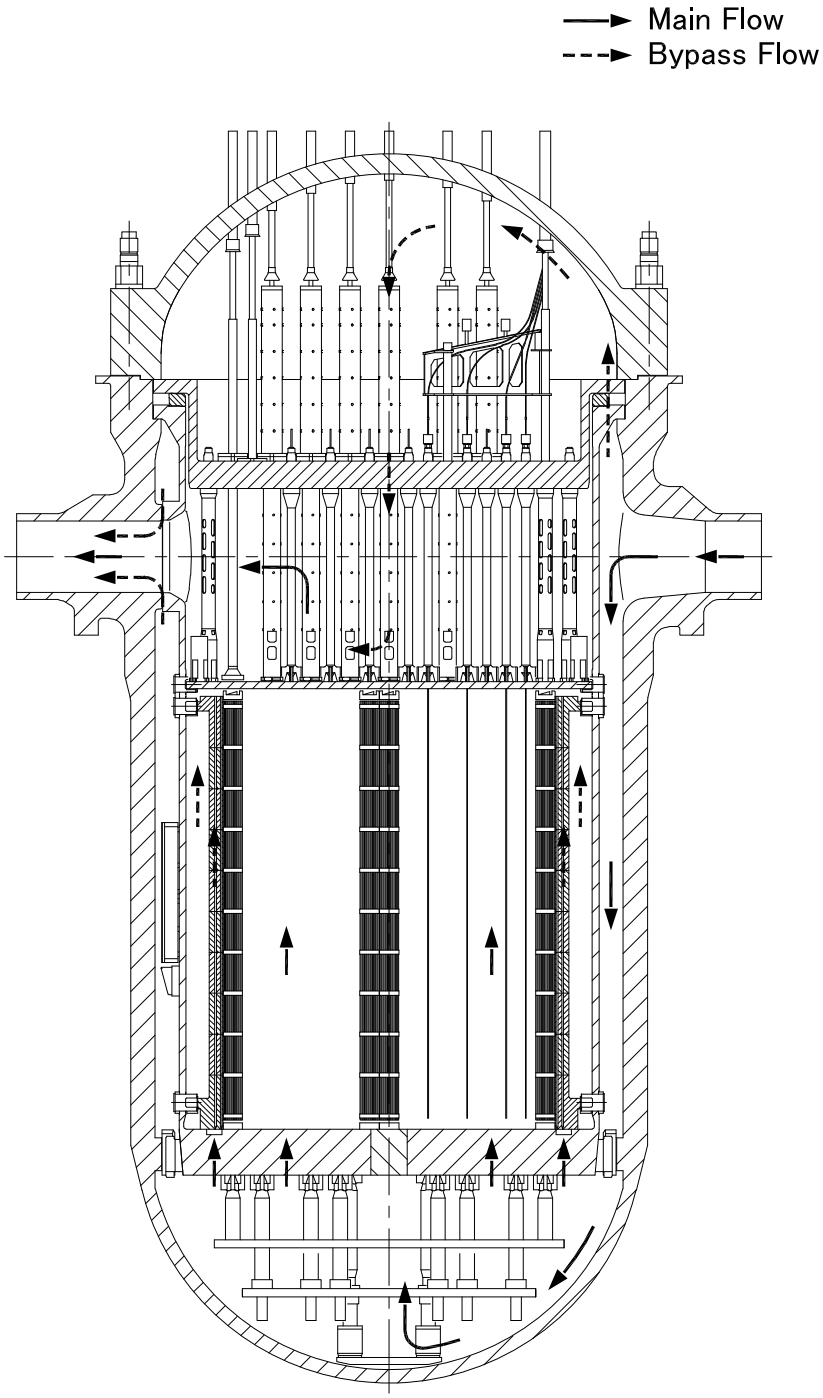

Figure 3.9-8 Reactor Internals RCS Flow and Bypass Flow Paths

3.10 Seismic and Dynamic Qualification of Mechanical and Electrical Equipment

The US-APWR safety-related mechanical and electrical equipment (including instrumentation, but excluding piping), and, where applicable, their supports classified as seismic category I (see Subsection 3.2.1), are demonstrated to be capable of performing their designated safety-related functions under the full range of normal and accident loadings (including seismic). The equipment subject to this demonstration includes the following:

- Equipment associated with systems that are essential to emergency reactor shutdown, containment isolation, reactor core cooling, and containment reactor heat removal.
- Equipment essential to preventing significant release of radioactive material to the environment.
- Instrumentation (including accident and post-accident monitoring) needed to assess plant and environs conditions during and after an accident as described in, “Criteria for Accident Monitoring Instrumentation for Nuclear Power Plants”, RG 1.97, Rev.4 (Reference 3.10-1).

The following equipment is also subject to the above demonstration:

- Equipment that performs the above functions automatically.
- Equipment that operators use to perform the above functions manually.
- Equipment that whose failure can prevent satisfactory accomplishment of one or more of the above safety-related functions.

This includes equipment in the RPS, ESF, Class 1E electrical equipment, the emergency power system, and auxiliary safety-related systems and supports. Examples of mechanical equipment include pumps, valves, fans, valve operators, and snubbers. Examples of electrical equipment are battery and battery racks, instruments and instrument racks, control consoles, electric cabinets, electric panels, valve operator motors, solenoid valves, relays, pressure switches, level transmitters, electrical penetrations, and pump and fan motors.

The information presented or referenced in this section includes the following:

- Identification of the seismic category I equipment and supports, where applicable.
- Criteria and methods of seismic qualification (test, analysis, or combination of test and analysis) for each type of equipment.
- Definition of the applicable seismic and other relevant dynamic load inputs.
- Safety-related functional requirements for mechanical and electrical equipment.
- Loads and load combinations for seismic category I equipment.
- Documentation to demonstrate the adequacy of the seismic qualification process.

Seismic category I SSCs are identified in Table 3.2-2 and Appendix 3D. The COL Applicant is to develop and maintain an equipment qualification file that contains a list of systems, equipment, and equipment support structures, as defined above, and summary data sheets referred to as an equipment qualification summary data sheet (EQSDS) of the seismic qualification for each piece of safety-related seismic category I equipment (i.e., each mechanical and electrical component of each system), which summarize the component's qualification. The EQSDSs contain the information identified in Subsection 3.10.4, which meets the requirements for records in GDC 1 of 10 CFR 50, Appendix A (Reference 3.10-2), and Appendix B, Criteria XVII of 10 CFR 50 (Reference 3.10-3). The qualification documentation, test reports, and supporting data are available and maintained in the equipment qualification file at a central location for the life of the plant.

The COL Applicant is to establish an equipment seismic qualification program which addresses all requisite aspects of seismic and dynamic qualification of mechanical and electrical equipment.

3.10.1 Seismic Qualification Criteria

The criteria used for seismic qualification includes:

- Decision criteria for selecting a particular test or method of analysis
- Considerations defining the seismic and other relevant dynamic load input motion
- A process to demonstrate the adequacy of the seismic qualification program

The qualification criteria are discussed in this subsection and in Subsection 3.10.2

The SSE term used in this section is applicable to either the site-independent earthquake or the site-specific earthquake as defined in Subsection 3.7.1. Therefore, the expression "SSE" as used for seismic qualification of SSCs refers to equipment qualified for either the standard plant design or the site-specific design. As defined in Subsection 3.7.1, in accordance with Appendix S to 10 CFR 50, the OBE for the standard plant is set at 1/3 or less of the SSE and therefore eliminates the OBE from the design of SSCs for the standard plant. For design of seismic category I and II SSCs that are not part of the standard plant, the COL Applicant can similarly eliminate the OBE, or optionally set the OBE higher than 1/3 SSE, provided the design of the non-standard plant's SSCs are analyzed for the chosen OBE.

For seismic qualification of safety-related mechanical and electrical equipment, with the elimination of OBE, the evaluation for fatigue effects for a smaller earthquake is performed at an equivalent fraction of the SSE as identified in "Policy, Technical, and Licensing Issues Pertaining to Evolutionary and ALWR Designs", SECY-93-087 (Reference 3.10-4).

3.10.1.1 Qualification Standards

Safety-related seismic category I mechanical and electrical equipment (including instrumentation and controls) and supports are designed to safely withstand the effects of postulated earthquakes combined with appropriate effects of normal and accident conditions (i.e., seismic category I requirements) without loss of intended safety-related function. The Discussion of GDCs 1, 2, 4, 14, and 30 of Appendix A to 10 CFR 50

(Section 3.1) describes the methods of meeting the general requirements for the seismic and dynamic qualification of seismic category I equipment.

The methods of implementing the requirements of Appendix S to 10 CFR 50 (Reference 3.10-5) as it relates to qualifying equipment to withstand the effects of postulated earthquakes, and the requirements of Appendix B to 10 CFR 50, as it relates to quality assurance criteria, are discussed in Section 3.7 and Chapter 17, respectively.

The seismic qualification and documentation procedures used for safety-related mechanical and electrical equipment and their supports are in accordance with the "IEEE Recommended Practice for Seismic Qualification for Class 1E Equipment for Nuclear Power Generating Stations", ANSI/IEEE Std 344-1987 (Reference 3.10-6), as endorsed by the NRC, RG 1.100, Revision 2, "Seismic Qualification of Electric and Mechanical Equipment for Nuclear Power Plants" (Reference 3.10-7).

The US-APWR mechanical and electrical equipment seismic qualification meets IEEE Std 344-1987 (Reference 3.10-6) as modified by RG 1.100 (Reference 3.10-7) for qualification by either analysis, testing or by a combination of both testing and analysis, and as supplemented with the "IEEE Recommended Practice for Seismic Qualification of Class 1E Equipment for Nuclear Power Generating Stations", IEEE Std 344-2004 (Reference 3.10-8) for use to seismically qualify equipment by an experience-based approach. IEEE Std 344-2004 (Reference 3.10-8) is to be endorsed by RG 1.100 (Reference 3.10-7) in a future revision as indicated in "Seismic and Dynamic Qualification of Mechanical and Electrical Equipment", NUREG-0800, SRP 3.10 (Reference 3.10-9). Experience-based qualification is not used for any equipment.

The qualification of the design of safety-related, seismic category I mechanical equipment to assure the structural integrity of pressure boundary components follows the guidance provided in the ASME Boiler and Pressure Vessel Code, Section III (Reference 3.10-10). The US-APWR implements an operability program for active valves following the guidance in "Functional Specification for Active Valve Assemblies in Systems Important to Safety in Nuclear Power Plants", RG 1.148 (Reference 3.10-11) as discussed in Subsections 3.9.3 and 3.9.6.

For procured equipment, the design and acceptance criteria for the equipment seismic qualification are required to be specified in the purchase specifications which are part of the purchase order. The applicable level of quality assurance and documentation is also required to be specified. The vendor is required to submit a seismic qualification plan/procedure for review and approval prior to performing the test and/or analysis, as required. Submittal of existing documentation is acceptable if documentation is provided correlating the existing data with the requirements in the purchase order. The vendor is to submit the final qualification documentation, in the form of an equipment seismic qualification report (ESQR), for review and approval prior to acceptance of the equipment. The ESQR is to contain the information identified in Subsection 3.10.4, as required, to confirm that the qualification of the equipment meets the purchase specifications.

3.10.1.2 Performance Requirements for Seismic Qualification

The performance requirements for every item of instrumentation and electrical equipment classified as seismic category I as identified in Appendix 3D and Section 3.11

are provided in the corresponding EQSDSs. An EQSDS is developed for every item of instrumentation and electrical equipment classified as seismic category I. Section 3.11 and Appendix 3D provides the environmental conditions of the electrical equipment, including the environmental conditions associated with normal operations, maintenance, testing, and postulated accidents, to be demonstrated before, during and after a seismic event. The equipment qualification file and EQSDS identify the test response spectrum (TRS) and the Required Response Spectra (RRS) for the seismic qualification. The TRS is required to envelope the RRS for qualification of equipment.

The performance requirements for seismic category I active mechanical components are defined in the corresponding equipment specifications along with the system functional requirements as described in Section 3.2, Section 3.9, and in the sections describing the various systems. Subsection 3.10.2.2 and Section 3.9 discuss additional requirements for active pumps, valves, and dampers and these requirements are included in the EQSDSs contained in the equipment qualification file. For other seismic category I mechanical components, the performance requirements are to maintain structural integrity under seismic and other concurrent applicable loading conditions. The demonstration of meeting the performance requirements is included in the EQSDSs for each mechanical component.

3.10.1.3 Performance Criteria

The qualification of safety-related components to safely withstand seismic loadings in combination with other concurrent dynamic loading effects demonstrates that safety-related seismic category I instrumentation and electrical equipment, and mechanical equipment, including active pumps, valves and dampers, are capable of performing their designated safety-related function(s) under the postulated SSE, as defined in Subsection 3.7.1, in combination with other concurrent loadings. Deformation of supports and structures is acceptable at the SSE levels, provided that their designated safety-related functional performance is not compromised and does not compromise the safety-related function of other equipment.

3.10.2 Methods and Procedures for Qualifying Mechanical and Electrical Equipment and Instrumentation

The recommended guidance and requirements in IEEE Std 344-1987 (Reference 3.10-6) and RG 1.100 (Reference 3.10-7) are used for the development and implementation of methods and procedures for seismic qualification of mechanical and electrical equipment. The methods and guidance in “Qualification of Active Mechanical Equipment Used in Nuclear Power Plants”, ASME QME-1-2002 (Reference 3.10-12), including Appendix QR-A with exceptions to be provided in a future revision of RG 1.100 (Reference 3.10-7), are also used for seismic qualification of active mechanical equipment.

The US-APWR seismic category I active mechanical and electrical equipment are seismically qualified in accordance with IEEE standards to safely withstand the SSE effects in combination with other applicable dynamic and static loads.

The design limits, load combinations associated with normal operations, postulated accident, and specified seismic and other transient events, and methods for combining dynamic responses for mechanical equipment are described in Subsection 3.9.3. The

dynamic loads considered in testing of instrumentation and electrical equipment, are seismic loads, hydrodynamic, and vibratory loads, as applicable, as discussed in Section 3.11.

Recent seismic research, including recently published attenuation relations, indicates that earthquakes in the central and eastern United States have more energy content in the high-frequency range than earthquakes in the western United States. Therefore, the COL Applicant is to investigate if site-specific in-structure response spectra generated for the COL application may exceed the standard US-APWR design's in-structure response spectra in the high-frequency range. Accordingly, the COL Applicant is to consider the functional performance of vibration-sensitive components, such as relays and other instrument and control devices whose output could be affected by high frequency excitation.

The potential failure modes of the high frequency-sensitive component types and assemblies are considered in order to demonstrate the suitability of the equipment for high-frequency seismic environments. The generic failure modes involving inadvertent change of state, contact chatter, signal change/drift, and connection problems due to high frequency effects are the main focus of the high frequency qualification testing. High frequency failures resulting from improper design of mounting, inadequate design connections and fasteners, mechanical misalignment/binding of parts and the rare case of failure of a component part, will result from the same structural failure modes as those experienced during low frequency content spectra qualification testing in accordance with IEEE Std 344-1987 (Reference 3.10-6). Because the safety-related equipment will experience higher stresses and deformations when subjected to the low frequency excitation, these failure modes are more likely to occur under the low frequency testing. Failure modes related to improper mounting, inadequate securing of connections, poor quality joints (cyclic strain effects), etc., are precluded by quality assurance inspection and process/design controls.

Potentially high frequency sensitive components include: electro-mechanical relays; electro-mechanical contactors; circuit breakers; auxiliary contacts; control switches; transfer switches; process switches and sensors; potentiometers; and digital/solid-state devices (mounting and connections only).

Acceptable methods for resolving high frequency concerns not already addressed by certified design qualification where site-specific in-structure response spectra generated for the COL application results in high frequency exceedances of the standard design in-structure response spectra include: review existing equipment qualification test data for adequate high frequency input motion; review circuits containing potentially sensitive items for inappropriate system actions due to intermediacy or set point drifts; or screening test to confirm equipment does not have high frequency vulnerabilities.

If existing test data are not available and a system and control logic review indicates that inadvertent change of state or intermediacy must be considered, then one of the following high frequency screening tests are used to demonstrate lack of sensitivity to high frequency vibrations in the 25-50 Hz range where the function is monitored during the screening test followed by post test functional testing: sine sweep (fast linear rate, traditional log rate); sine beat at 1/3 octave spacing; band-limited white noise; or, random multifrequency time history.

The above testing is not a qualification test but is intended to assure that high frequency sensitive components are not present in the set of qualified certified design equipment and functional systems.

In conjunction with the above, for the purpose of qualification of equipment by analysis, the rigid range is defined as having a natural frequency greater than 50 Hz. For the purpose of testing equipment that is not sensitive to response levels caused by high frequency ground motions, rigid is defined as equipment with a natural frequency greater than 33 Hz. If the equipment, to be tested, is sensitive to response caused by high frequency ground motions, then rigid is defined as equipment having a natural frequency greater than 50 Hz.

The US-APWR utilizes the following methods for seismic qualification of equipment based on the type, size, shape, and complexity of the equipment configuration, whether the safety function can be assessed in terms of operability or structural integrity alone, and the reliability of the conclusions:

- Predict the equipment's performance by analysis
- Test the equipment under simulated seismic conditions
- Qualify the equipment by a combination of test and analysis

The US-APWR seismic category I equipment is qualified to show that it can perform its safety-related function during and after a postulated earthquake. The seismic qualification considers interfaces and the effects of the amplification within the equipment due to the interfaces and supporting structure. The function of the equipment is dependent on the equipment itself and the system in which it is to function. The safety-related function is determined as that required both during and after a postulated earthquake, which could be different. For example, an electrical device may be required to have no spurious operations during the postulated earthquake or to perform an active function both during, and after, the postulated earthquake, or it may be required to survive during the postulated earthquake and perform an active function after the postulated earthquake, or any combination of these. Another device may only be required to maintain structural integrity during and after the postulated earthquake.

The functionality of mechanical and electrical equipment during and after a postulated earthquake of magnitude up to and including the SSE for static and dynamic loads from normal, Anticipated Operational Occurrence and accident load conditions is assured by tests and/or analyses. The horizontal and vertical SSE RRS curves developed at the damping of interest, as discussed in Subsections 3.7.1 and 3.7.3, form the basis for the seismic qualification of the equipment. The equipment is demonstrated to withstand the equivalent effect of five OBE excitations followed by one SSE for qualification without loss of structural integrity and functionality, as required.

With the elimination of the OBE from design considerations, two alternatives exist that essentially maintain the requirements provided in IEEE Std 344-1987 (Reference 3.10-6) to qualify equipment with the equivalent of five OBE events followed by one SSE event (with ten maximum stress cycles per event). Of these alternatives, the equipment is qualified with five 1/2 SSE events followed by one full SSE event (with ten maximum stress cycles per event).

In terms of maximum stress cycles for fatigue analysis, in accordance with SECY-93-087 (Reference 3.10-4), this is equivalent to any of the following:

- 20 cycles of SSE,
- 50 cycles of 1/2 SSE and 10 cycles of SSE,
- 150 cycles of 1/3 SSE and 10 cycles of SSE,
- 300 cycles of 1/3 SSE,
- 100 cycles of 1/2 SSE.

Alternatively, a number of fractional peak cycles equivalent to the maximum peak cycles for five 1/2 SSE events when followed by one full SSE may be used in accordance with Appendix D of IEEE Std 344-1987 (Reference 3.10-6) and Figure D.1 of IEEE Std 344-2004 (Reference 3.10-8).

Selection of damping values for equipment to be qualified is made in accordance with "Damping Values for Seismic Design of Nuclear Power Plants", RG 1.61, Rev.1 (Reference 3.10-13) and IEEE Std 344-1987 (Reference 3.10-6). Higher damping values may be used if justified by documented test data with proper identification of the source and mechanism.

Qualification of seismic category I mechanical and electrical equipment by testing is the preferred method for complex equipment which must perform an active function during the SSE. The analysis method alone is not recommended for complex equipment that cannot be modeled to correctly predict its response and functionality. Analysis without testing is acceptable only if structural integrity alone can assure the design-intended function. When complete testing is impractical, then the qualification is performed by a combination of test and analysis.

Equipment previously qualified by means of tests and analyses equivalent to those described herein can be used if proper documentation is provided.

Testing

The seismic qualification testing inputs and methods for qualification of mechanical and electrical equipment are performed in accordance with the guidelines provided in IEEE Std 344-1987, Section 7 (Reference 3.10-6). Equipment is tested in its operational condition and functionality is verified during and after testing. Loadings for the normal operation of the equipment, such as thermal and flow-induced loads, are simulated and concurrently superimposed upon the seismic and other dynamic loading to the extent practicable. For seismic and dynamic loads, the actual test input is characterized in the same manner as the required input motion to the equipment and the conservatism in amplitude is demonstrated. The TRS envelopes the RRS except for equipment not sensitive to high frequency motion with exceedances in the 25-50 Hz range.

Seismic testing is performed by subjecting equipment to vibratory motion that conservatively simulates that postulated at the equipment mounting location. Factors considered involve the location of the equipment, the nature of the equipment, the nature

of the postulated earthquakes, and whether the equipment is to be used in one application or many (proof testing or generic testing). Equipment is conservatively tested considering the multidirectional effects of the postulated earthquakes.

The types of test to be used are single frequency and multifrequency. The seismic and dynamic test inputs are provided by the in-structure floor response spectra identified with the building elevation derived from the SSE and developed by the time-history modal analysis method or direct integration method for various damping values as described in Subsection 3.7.3.

Multi-frequency testing provides a broadband test motion that is appropriate for producing a simultaneous response from modes of a multi-degree-of-freedom system whose malfunction may be caused by modal interaction. Multi-frequency testing is the preferred method since the seismic and dynamic load excitation generally has broad frequency content.

Single-frequency testing, such as sine beats, is used when the seismic ground motion is filtered due to one predominant structural mode; when the resulting floor motion may consist of one predominant frequency; when it can be demonstrated that the anticipated response of the equipment is adequately represented by one mode; or, when the input has sufficient intensity and duration to excite the relevant modes to the required magnitude, such that the TRS envelopes the corresponding spectra.

For the seismic and dynamic portion of the loads, the test input motions are applied to one vertical axis and one principal horizontal axis (or two orthogonal horizontal axes) simultaneously, unless it is demonstrated that the equipment response is not sensitive to the vibratory motion in the horizontal direction, and vice versa. The time phasing of the inputs in the vertical and horizontal directions must be such that a purely rectilinear resultant input is avoided. An alternate method is to test with the vertical and horizontal inputs in-phase, and then repeat the test with inputs 180 degrees out-of-phase. This type of testing must be repeated with the equipment rotated 90 degrees horizontally.

Components that have been previously tested to IEEE Std 344-1971 prior to submittal of the DCD are reevaluated to justify the appropriateness of the input motion and requalify the equipment, if necessary. The COL Applicant is to requalify the component using biaxial test input motion unless the applicant provides justification for using a single-axis test input motion.

The equipment to be tested is mounted in a manner that simulates the intended service mounting, and the fixture design is such that it does not cause any extraneous dynamic coupling to the test component.

The dynamic coupling effect of electrical connections, conduit, sensing lines, and any other interfaces are considered and included in the test unless otherwise justified. The method chosen for testing depends upon the nature of the expected vibration environment and also on the nature of the equipment.

Seismic testing is performed in the proper sequence as indicated in “IEEE Standard for Qualifying Class 1E Equipment for Nuclear Power Generating Stations”, IEEE Std 323-1974 (Reference 3.10-15) and the testing identifies and accounts for significant aging mechanisms (see Section 3.11). The equipment is demonstrated to be capable of

performing its safety-related function throughout its qualified life including its functional operability during and after a SSE at the end of that qualified life.

Analysis

The seismic analysis methods used are performed in accordance with the guidelines in IEEE Std 344-1987, Section 6 (Reference 3.10-6). Two approaches can be used to seismically qualify equipment by analysis for a number of fatigue inducing smaller earthquake events followed by an SSE using the methods in accordance with IEEE Std 344-1987, Section 6 (Reference 3.10-6). Qualification by analyses without testing is acceptable if the structural integrity alone can assure the intended design function for the equipment. The two approaches are dynamic analysis and static coefficient analysis. The method utilized is one that takes into account the complexity of the equipment and adequacy of analytical techniques to properly predict the equipment's safety-related functions while under seismic excitation and most accurately represents the equipment's performance under seismic conditions. The method to use is that which most accurately represents the equipment's performance under seismic conditions and is also based on the perceived margin of strength of the equipment.

For dynamic analysis, the equipment and any secondary structural supports are modeled to adequately represent their mass distribution and stiffness characteristics and a modal analysis is performed to determine whether the equipment is rigid or flexible. Rigid equipment can be analyzed using static analysis and the seismic acceleration associated with the mounting location. Flexible equipment can be analyzed using its dynamic response computed from a response spectrum, time-history, or other analysis methods.

When the static coefficient analysis is used, the determination of natural frequencies is not required and the acceleration response of the equipment is assumed to be the maximum peak of the in-structure RRS at 5% damping. Subsection 3.7.3 provides additional discussion on the use of the equivalent static load method of analysis. A static coefficient of 1.5 is used to take into account the effects of multi-frequency excitation and multi-mode response. The increased acceleration values are used as equivalent static load factors applied to the entire mass of the equipment being evaluated. The static coefficient analysis method is used only for the evaluation of structural integrity of equipment. The static analysis method alone is not sufficient for the qualification of safety-related active equipment where the demonstration of operability is required.

When one of the analysis methods described above is used, it is performed with a number of smaller earthquake events that contain a fatigue-inducing potential that is similar to the postulated earthquake response motion at the mounting of the equipment. The number of smaller earthquake events and their fatigue-inducing potential is important only for low-cycle fatigue-sensitive equipment. The analysis will determine that the structural integrity of the equipment is maintained in combination with other applicable loads during the smaller earthquake event. The analysis must show that the smaller fatigue inducing earthquake events followed by an SSE do not result in failure of the equipment to perform its safety-related function. The resulting maximum stresses under applicable loading conditions must be shown to be less than the allowable.

When analyses are used for qualification, the combination of multi-modal and multi-directional responses are made in accordance with "Combining Modal Responses

and Spatial Components in Seismic Response Analysis", RG 1.92, Revision 2 (Reference 3.10-16).

Combined Testing and Analysis

The methods used for combined testing and analysis are performed in accordance with the guidelines in IEEE Std 344-1987, Section 8 (Reference 3.10-6). Combined testing and analysis is utilized when the equipment cannot be practically qualified by analysis or testing alone. Factors used in determining the use of this method include size of the equipment, its complexity, or the large number of similar configurations. Large equipment, such as motors, generators, and multi-bay equipment racks and consoles may be impractical to test at full levels due to limitations in vibration test equipment. Modal testing and analysis can serve as an aid to qualification of large and complex systems. Modal testing is used as the method to determine resonant frequencies, mode shapes, and as a lower bound for modal damping. A modal test may be performed to correlate the frequencies and mode shapes, determined during the analysis, with the measured response of complex system. Extrapolation for similar equipment can be utilized for equipment that was previously qualified and differs only in size or in specific qualified devices located in the assembly or structure.

Interaction of Category II with Seismic Category I Equipment

Seismic category II equipment, as defined in Subsection 3.2.1, is designed and analyzed for the SSE event, using the same methods as specified for seismic category I equipment, to demonstrate structural integrity so as not to collapse on, or adversely interfere with seismic category I equipment. Seismic category I equipment is protected from non-seismic equipment by isolation or the use of barriers when possible. If isolation is not possible, then the equipment is designed and analyzed as seismic category II to maintain structural integrity to withstand an SSE event.

3.10.2.1 Seismic Qualification of Instrumentation and Electrical Equipment

Seismic qualification of seismic category I instrumentation and electrical equipment is demonstrated by either type testing or a combination of test and analysis. The selection of qualification method employed by US-APWR for a particular item of equipment is based upon many factors including: practicability, complexity of equipment, economics, and availability of previous seismic qualification data/reports. The qualification method employed for a particular item of instrumentation or electrical equipment is identified in the individual EQSDS.

Instrumentation described in RG 1.97 (Reference 3.10-1), including associated mountings, are tested under appropriate seismic and dynamic loadings as described in the RG to assure that the instruments continue to monitor plant variables and systems after a seismic event and/or DBA.

3.10.2.1.1 Type Testing

Type testing can be utilized on a sample of equipment representing a generic group that are similar in materials, design and manufacturing. The sample components are in compliance with the manufacturer's quality control system and specifications for production units. The tested equipment is subjected to environmental and operating

cycles that simulate the intended service conditions and safety-related functions for which they are to be qualified.

Multi-frequency testing or single-frequency testing is used for seismic category I instrumentation and electrical equipment in accordance with the guidelines in IEEE Std 344-1987 (Reference 3.10-6).

Multi-frequency testing is normally used for hard mounted equipment (floor and wall mounted) where a RRS at the equipment mounting location is identified. The test results are provided in the equipment qualification file (and the EQSDS for the individual equipment) and the TRS is shown to envelope the RRS over the entire frequency range of interest, except for equipment not sensitive to high frequency motion with exceedances in the 25-50 Hz range.

Single-frequency testing can be used for line-mounted equipment and other equipment as recommended by IEEE Std 344-1987 (Reference 3.10-6) and RG 1.100 (Reference 3.10-7). Required input motion (RIM) in seismic evaluations is normally associated with components in distributions systems (piping and duct) lines where the single mode seismic input to the component is dominated by the seismic response of the distribution system (line) and qualification is performed by generic application to a wide range of line frequencies. For the US-APWR, piping and duct systems are generically designed to limit the peak acceleration experienced by the equipment mounted on them to a value less than the specified RIM acceleration, which is 6.0g horizontal and 6.0g vertical in accordance with “IEEE Standard for Qualification of Actuators for Power-Operated Valve Assemblies with Safety-Related Functions for Nuclear Power Plants”, IEEE Std 382-1996 (Reference 3.10-17). For line-mounted equipment that is not qualified to the generic level of 6.0g, the seismic input motion is determined from the response of the system analysis in which it is located. The method for qualification of line-mounted equipment is performed in accordance with the guidance in IEEE Std 344-1987, Section 7.6.7 (Reference 3.10-6) and IEEE Std 382-1996 (Reference 3.10-17), with justification and test results provided in the equipment qualification file.

3.10.2.1.2 Test and Analysis

The US-APWR utilizes a combination of test and analysis to qualify seismic category I instrumentation and electrical equipment. The test methods utilized are similar to those described above for type testing along with static and/or dynamic analysis. These methods can be used to establish input response requirements at sub-component locations. This approach can be used to justify the extrapolation of tests on a single electrical cabinet, or a small number of connected cabinets, to qualify an assembly. Analysis can be used to: explain unexpected behavior during a test; obtain a better understanding of the dynamic behavior of the equipment so that the proper test can be defined; or obtain a measure of expected response before a test. The documentation is included in the equipment qualification file and the EQSDSs.

3.10.2.2 Seismic and Operability Qualification of Active Mechanical Equipment

The methods and procedures used for qualifying active mechanical equipment (i.e., valves, pumps, and dampers) are described in Section 3.9, Subsection 3.10.2, and

this subsection. Analysis, test, or a combination of test and analysis are used for qualification of seismic category I active mechanical equipment to show it maintains structural integrity (including pressure retention), and operability. The methods used assure equipment functionality and operability for its intended safety-related function under required plant conditions.

Seismic category I active mechanical equipment is designed to withstand seismic and dynamic loads, including the intended service load conditions identified in the equipment's design specification, in accordance with the requirements in ASME Code, Section III (Reference 3.10-10) described in Section 3.9. An example of such service loads include: normal, upset, emergency, faulted, testing, and other conditions. Other loads include, as applicable, internal pressure, operator thrust, dynamic transients, flow induced vibration, degraded flow conditions, reciprocating and rotating equipment vibrations, and nozzle loads. Load combinations are described in Section 3.9 and documented in the equipment qualification file and EQSDS.

GDC 14 requires, in part, that the RCPB is designed, fabricated, erected, and tested so as to have an extremely low probability of abnormal leakage and GDC 30, in part, requires that components which are part of the RCPB are designed, fabricated, erected, and tested to the highest quality standards practical. The qualification program for these components, including valves, which are part of the RCPB, includes testing or testing and analyses. This demonstrates that these components do not experience leakage, or increase in leakage above the specified limits in the equipment specification, as a result of any loading or combination of loadings for which the valves must be qualified (See Subsections 3.9.3 and 3.9.6). The seismic qualification documentation for valves is included in the equipment qualification file and the EQSDSs.

Section 3.9 includes dynamic testing and analysis of mechanical systems, components and equipment, seismic analysis, and qualification of safety-related mechanical equipment, load combinations, and inservice testing programs.

If the dynamic testing of a pump or valve assembly proves to be impractical, static testing of the assembly is acceptable provided that the end loadings are conservatively applied and are equal to or greater than the postulated event loads, dynamic amplification effects are accounted for, the component is in the operating mode during and after the application of loads, and an adequate analysis is made to show the validity of the static application of loads.

Valves

Seismic category I active valves listed in Table 3.9-14 are constructed in accordance with the ASME Code, Section III (Reference 3.10-10) and qualified by tests and analysis to verify that their structural and functional requirements are met and operate (perform their mechanical motion) during and after a seismic event.

Seismic category I active valves are analyzed using guidance and stress limits of ASME Code, Section III (Reference 3.10-10) and Subsection 3.9.3. The method for qualification of active valve assemblies that can provide an acceptable level of assurance of functional operability provided in ASME QME-1-2007 (Reference 3.10-12) is also used as guidance. This method of qualification is based on tests and analysis demonstrating the ability of the valve assembly to perform its function under extreme adverse

conditions of pressure, mechanical loading, flow dynamics, temperature and vibration.

An analysis of the extended structure is performed for static equivalent seismic loads applied at the center of gravity of the extended structure (i.e., valve bonnet, yoke, actuator, and accessories mounted on the actuator assembly, etc.). The maximum calculated stress produced in the valve body, which includes applicable loading conditions, confirms structural integrity and is within the limits acceptable by ASME Code, Section III (Reference 3.10-10) for active Class 1, 2, and 3 valves. Valves with no extended portions will meet the minimum wall thickness requirements for the pressure retaining parts based on the pressure and temperature rating in ASME Code, Section III (Reference 3.10-10). The seismic loading effects of the extended structure uses the appropriate acceleration values as determined from the applicable RRS, when the equipment is mounted directly to a building floor. If this is not the case, as for in-line mounted valves, the seismic loading is 6.0 g in both the horizontal and vertical direction for the SSE condition. The excitation in each of the two major horizontal directions are considered to act separately, but each simultaneously with the vertical direction.

In addition to the initial qualification of safety-related valves, other tests are performed to verify their functionality and operability. Prior to installation in the plant, seismic category I active valves (except for check valves) are subjected to the following: (1) tests of the valve pressure boundary are hydrostatically tested in accordance with ASME Code, Section III (Reference 3.10-10); (2) tests of the valve seat leakage; (3) hydrostatic tests of the disc; and, (4) operational tests verifying that the valve will open and close. After installation, active valves are subjected to hydrostatic tests, construction acceptance tests, and preoperational tests and where applicable, periodic inservice inspections and operations performed in situ verifying and assuring the functionality of the valve. These tests assure the reliability of the valve for the design life of the plant. The valves included in the required ASME Code, Section XI (Reference 3.10-18), IST are identified in Subsection 3.9.6 (Table 3.9-14). For those valves that are not included, the demonstration that the valves are capable of performing their safety-related function is by inclusion in plant maintenance programs, plant procedures, and/or technical specifications.

An analysis of the extended structure on active valves is performed using a 6.0g static equivalent seismic load applied at the center of gravity of the extended structure. The nozzle loads imposed by the attached piping are considered. To assure functionality under combined loadings, the stresses resulting from applied test loads are shown to envelope the specified service limits for ASME Code, Section III (Reference 3.10-10), Class 1, 2, and 3 active valves for the intended function of the component. Stresses in valve bodies are limited to the particular material's elastic limit when the valve is subjected to the combination of normal operating loads, SSE, and other applicable dynamic loads as specified in the equipment's specification and ASME Code, Section III (Reference 3.10-10).

A representative valve of each design type with extended structures is subjected to static load tests, as applicable. The valve assembly is installed in a test fixture with suitable provision for imposing the static test load. The valve assembly is mounted by its normal mounting points and is sufficiently rigid to resist the applied seismic load. The load is applied along the least rigid axis of the valve assembly and as close to the center of gravity as possible. Nozzle loads are simultaneously applied to the valve through its mounting during the test. The valve operating pressure is applied during the test and the

valve cycled (opened and closed) while in the deflected position.

If the natural frequency of the valve is rigid, the accelerations used for the static valve qualification are 6.0g in both horizontal directions and vertical. If the natural frequency of the valve is not rigid, the acceleration values applied during the test are adjusted by the amplification of the input acceleration considering the natural frequency of the valve determined by dynamic analysis.

The procedures acceptable to the NRC for implementing the regulations with respect to the detailed specification of information pertinent to defining the operating requirements for valve assemblies whose safety-related function is to open, close, or regulate fluid flow are discussed in RG 1.148 (Reference 3.10-11) with supplemental information for application of "Self-Operated and Power-Operated Safety-Related Valves Functional Specification Standard", ANSI N278.1-1975 (Reference 3.10-19). The functional specifications for valves are addressed in Section 3.9.

The equipment specification for safety-related valves includes the valve operating conditions used to evaluate the valve discs, which experience the maximum design line pressure and maximum differential pressure from plant operating, transient, and accident conditions (including pressure and LOCA). Feedwater line valve discs are evaluated for the effect of dynamic loads by considering the effect of dynamic differential pressure. The equivalent differential pressure is developed from a transient analysis that includes system arrangement and valve closing dynamics. The acceptable limits are specified in the ASME Code, Section III (Reference 3.10-10) for Class 1, 2, and 3 valves. An analysis is performed to verify the design adequacy of the disc for the differential pressure and impact energy on the valve disc during a LOCA.

Seismic category I active pressure relief valves are qualified using methods similar to the above requirements for active valves. The end loads applied during testing include the discharge loads. When a relief valve with extended structure is tested to demonstrate operability, a static load equivalent to the seismic load for active valves is applied to the top of the bonnet and the pressure increased until the valve mechanism actuates. The test pressure is applied to the valve inlet to verify that seat leakage is within the limits specified in the equipment specification. The valve is demonstrated to meet the seismic design requirements and functional requirements when successful actuation during testing is demonstrated.

Seismic category I active check valves, due to their simple characteristics, are qualified using standard design or analysis to assure structural integrity and the ability to operate is assured by the design features. In addition to the design considerations, each type of active check valves undergo a stress analysis including applicable SSE loads for critical parts that could affect the operability of the valve, hydrostatic, and seat leakage test. The valve also undergoes in-situ testing and inspection to assure it remains functional.

Pumps

Seismic category I active pumps listed in Table 3.9-7 are constructed in accordance with the ASME Code, Section III (Reference 3.10-10) and are qualified by tests and analysis to verify that their structural and functional requirements are met and the pumps will operate during and after a seismic event. The qualification of the mechanical portions of seismic category I pumps includes the fluid pressure boundary, the suction and

discharge nozzles and the shaft and seal retainers and the impeller assembly.

The qualification of seismic category I active pumps is demonstrated by either test, or a combination of test and analysis. The method of qualification is usually determined by the manufacturer and can be as defined above, or existing documented data can be used with adequate justification. The method used must demonstrate that the pump meets the equipment specification provided to the vendor. The natural frequency of the pump shaft and rotor assembly must be determined to ascertain whether they are within the frequency range of the vibratory excitations. If the minimum natural frequency of the assembly is beyond the excitation frequencies, a static deflection analysis of the shaft is acceptable to account for dynamic effects. If the assembly's natural frequencies are close to the excitation frequencies, an acceptable dynamic analysis must be performed to determine the structural response of the assembly to the excitation frequencies.

The qualification documentation provided for the pump assembly must show that the pump will perform its safety-related function when subjected to the maximum acceleration at its mounting location and faulted nozzle loads. The qualification is based on evaluating the entire pump/motor assembly, which includes the coupling system and considers its interface with the mounting structure. The method of qualification addresses the dynamic interactions between the pump, motor, and mounting structure and address the deflection results for determination of any requirements for interaction with other equipment. If qualification is performed by analysis, a frequency search test of the pump assembly must be performed to verify the seismic input used in the analysis. The analysis must determine the speed of the pump shaft as a result of the postulated events and compare it with the design critical speed.

The stresses resulting from the combination of normal operating loads, SSE, and dynamic system loads must be shown to be less than the allowable specified in ASME Code, Section III (Reference 3.10-10) as identified in Subsection 3.9.3. The calculated stresses in the pump casing due to applied maximum nozzle loads must be shown to be less than the allowable specified in ASME Code, Section III (Reference 3.10-10) and identified in Subsection 3.9.3.

The qualification of the impeller, shaft, and bearings must be shown to meet the functionality requirements by showing that the stresses on the shaft do not exceed the minimum yield strength of the material, the deflections of the shaft and/or impeller blades will not cause the impeller assembly to seize, and the bearing loads are below the manufacturer's allowables.

Functionality of active pumps is demonstrated by hydrostatic tests, leakage tests, and performance tests. The fluid pressure boundary of the pump is hydrostatically tested in accordance with the requirements in the ASME Code, Section III (Reference 3.10-10) and the equipment specification described in Subsection 3.9.3. During the hydrostatic test the fluid pressure boundary is examined for leaks at joints, connections, and regions of high stress (openings and/or thickness transition sections). The permitted leakage rates are identified in the equipment specification. The performance tests demonstrate that the pump is capable of meeting the hydraulic requirements in the equipment specification while operating with flow at the total developed head, minimum and maximum head, the positive suction head, and other parameters, as applicable. Compliance with the performance limits is also verified by monitoring bearing temperatures and vibration levels. The bearing temperature limits are provided by the

equipment manufacturer.

Active pumps also undergo tests after installation in the plant and prior to startup and are included in the periodic inservice inspection and operation tests described in Subsection 3.9.6 or inclusion in the plant maintenance programs, plant operating procedures and/or technical specifications. These tests further demonstrate the capability of the pumps to perform their safety-related function.

Dampers

Safety-related active dampers used on ventilation systems to isolate the HVAC areas, such as the control room habitability system, during the seismic events are listed in Table 3.2-2 and Appendix 3D, and are seismically qualified to operate under faulted conditions on demand.

The above methods assure that the active safety-related valves, pumps, and dampers are qualified for operability during a faulted seismic event and assure that they are to perform their safety-related function as required.

3.10.2.3 Pump Motor and Valve Operator Qualification

The seismic category I active pump motor, active valve motor operators, and appurtances vital to operation of the pump and valve are independently qualified for the specified environment as identified in Appendix 3D and Section 3.11, as well as during an SSE seismic event, in accordance with IEEE Std 344-1987 (Reference 3.10-6). The seismic qualification is included in the equipment qualification file and EQSDSs for each piece of safety-related equipment.

3.10.2.4 Seismic Qualification of Other Seismic Category I Mechanical Equipment

The seismic qualification of other seismic category I mechanical equipment identified as not active is demonstrated by analysis to maintain structural integrity and pressure retention under applicable loading conditions. The methods utilized are described in Subsections 3.7.3, 3.9.2, and 3.10.2 and conform to the methods described in IEEE Std 344-1987 (Reference 3.10-6) and ASME Code, Section III (Reference 3.10-10).

3.10.3 Methods and Procedures of Analysis or Testing of Supports of Mechanical and Electrical Equipment and Instrumentation

The qualification of safety-related seismic category I electrical and mechanical equipment supports is performed by either tests or analyses to assure their structural capability, including anchorage, to withstand seismic excitation characterized by the RRS at the support mounting location.

Electrical equipment and instrumentation supports (including instrument racks, control consoles, cabinets, and panels) are tested with the equipment installed or an equivalent dummy simulating the equivalent equipment inertial mass effects and dynamic coupling to the support. The input motion for the test is determined by the inservice mounting location of the support. The method for testing supports is the same as that described for equipment in Subsection 3.10.2. If the equipment is installed in a non-operational mode

for the support test, the response of the support in the test at the equipment mounting location is monitored and characterized as a RRS to be used for functional qualification of the equipment separately, as described in Subsection 3.10.2. The TRS must be shown to envelope the RRS to qualify the support for structural integrity.

If the electrical equipment supports are qualified by analysis using the methods in Subsection 3.10.2, the input motion must take into account the interface requirements. The analytical results include the required input motions to the mounted equipment as obtained and characterized by a RRS, which are used to qualify the equipment separately as described in Subsection 3.10.2. The allowable stress criteria appropriate for the support material is used.

For mechanical equipment supports (including pumps, valves, valve operators and fans), the design and service load combinations and stress limits for ASME Code, Section III (Reference 3.10-10) is given in Subsection 3.9.3 and the supports are qualified by showing that these stress limits are not exceeded. The analysis results and equipment mounting and interface requirements are identified in the EQSDSs for the equipment.

Batteries and battery rack supports are mounted to the building floor and seismically qualified for applicable seismic loads using the ISRS given in Subsection 3.7.2, and qualified using the methods in Subsection 3.10.2.

For procured equipment and supports, the interface requirements are provided to the supplier in the equipment specification which is part of the purchase order. Equipment supports used in the US-APWR are generally designed to be rigid and are qualified by analysis or tests as described above and in Subsection 3.10.2, and include the interface with the supporting equipment. The structural integrity of the supports is assured by showing that stresses are below the applicable code allowable stresses.

The criterion for instrumentation line supports is addressed in Subsection 3.12.6 using the criteria from ASME Code, Section III (Reference 3.10-10), Subsection NF for Equipment Class 1 and 2 supports.

The methodologies for qualification of HVAC duct supports, conduit supports, and cable tray supports are presented in Appendices 3A, 3F, and 3G, respectively.

3.10.4 Test and Analyses Results and Experience Database

To address the requirements of GDC 1 and 10 CFR 50, Appendix B, Criteria XVII to establish records concerning the qualification of equipment, complete, and auditable records are established and maintained in the equipment qualification file. These files describe the qualification method used for equipment and the tests and analyses results in sufficient detail to document the degree of compliance with the equipment seismic qualification requirements. The equipment qualification file includes a list of systems, equipment, and the equipment support structures identified in Table 3.2-2 and Appendix 3D, and the EQSDSs for each piece of safety-related equipment (i.e., each mechanical and electrical component of each system), which summarizes the component's qualification. These records are maintained for the life of the plant at the plant administrative facilities. These records are to be updated and kept current as equipment is replaced, further tested, or otherwise further qualified. These EQSDSs include the following:

- Identification of equipment, including vendor, model number, and location within each building. Valves that are part of the RCPB are identified.
- Physical description, including dimensions, weight, and field mounting condition, and identification of whether the equipment is pipe-, floor-, or wall-supported.
- Description of the equipment's function within the system.
- Identification of design (functional) specifications and qualification reports and their locations. Functional specifications for active valve assemblies conform to the requirements in accordance with RG 1.148 (Reference 3.10-11).
- Description of the required loads and their intensities for which the equipment is qualified.
- Qualification by test, identification of the test methods and procedures, important test parameters, and a summary of the test results.
- Qualification by analysis, identification of the analysis methods and assumptions and comparisons between the calculated and allowable stresses and deflections for critical elements.
- Natural frequency (or frequencies) of the equipment.
- Identification of whether the equipment may be affected by vibration fatigue cycle effects, and a description of the methods and criteria used to qualify the equipment for such loading conditions.
- Documentation that the equipment has met the qualification requirements.
- Availability for inspection (i.e., statement of whether the equipment is already installed).
- A compilation of the RRS (or time-history) and corresponding damping for each seismic and dynamic load specified for the equipment together with other loads considered in the qualification and the method of combining loads.

3.10.4.1 Implementation Program and Milestones

The implementation of the equipment seismic qualification program is described in a Technical Report titled, "US-APWR Equipment Environmental Qualification Program," issued as a separate report (Reference 3.11-3). The COL Applicant is to document and implement an equipment qualification program for seismic category I equipment and provide milestones and completion dates.

3.10.4.2 Experience Based Qualification

Experience-based qualification is not used for any equipment.

3.10.5 Combined License Information

COL 3.10(1) The COL Applicant is to document and implement an equipment qualification program for seismic category I equipment and provide milestones and completion dates.

COL 3.10(2) Deleted

COL 3.10(3) The COL Applicant is to develop and maintain an equipment qualification file that contains a list of systems, equipment, and equipment support structures, as defined above, and summary data sheets referred to as an equipment qualification summary data sheet (EQSDS) of the seismic qualification for each piece of safety-related seismic category I equipment (i.e., each mechanical and electrical component of each system), which summarize the component's qualification.

COL 3.10(4) Deleted

COL 3.10(5) Components that have been previously tested to IEEE Std 344-1971 prior to submittal of the DCD are reevaluated to justify the appropriateness of the input motion and requalify the equipment, if necessary. The COL Applicant is to requalify the component using biaxial test input motion unless the applicant provides justification for using a single-axis test input motion.

COL 3.10(6) Deleted

COL 3.10(7) Deleted

COL 3.10(8) For design of seismic category I and II SSCs that are not part of the standard plant, the COL Applicant can similarly eliminate the OBE, or optionally set the OBE higher than 1/3 SSE, provided the design of the non-standard plant's SSCs are analyzed for the chosen OBE.

COL 3.10(9) The COL Applicant is to investigate if site-specific in-structure response spectra generated for the COL application may exceed the standard US-APWR design's in-structure response spectra in the high-frequency range. Accordingly, the COL Applicant is to consider the functional performance of vibration-sensitive components, such as relays and other instrument and control devices whose output could be affected by high frequency excitation.

COL 3.10(10) The COL Applicant is to establish an equipment seismic qualification program which addresses all requisite aspects of seismic and dynamic qualification of mechanical and electrical equipment.

3.10.6 References

3.10-1 Criteria for Accident Monitoring Instrumentation for Nuclear Power Plants. Regulatory Guide 1.97, Rev. 4, United Stated Nuclear Regulatory Commission, Washington, DC, June 2006.

3.10-2 General Design Criteria for Nuclear Power Plants, Domestic Licensing of Production and Utilization Facilities, Energy. Title 10, Code of Federal Regulations, Part 50, Appendix A, U.S. Nuclear Regulatory Commission, Washington, DC.

3.10-3 Quality Assurance Criteria for Nuclear Power Plants and Fuel Reprocessing Plants, Domestic Licensing of Production and Utilization Facilities, Energy. Title 10, Code of Federal Regulations, Part 50, Appendix B.

3.10-4 Policy, Technical, and Licensing Issues Pertaining to Evolutionary and Advanced Light-Water Reactor (ALWR) Designs. SECY-93-087, United States Regulatory Commission, April 2, 1993.

3.10-5 Earthquake Engineering Criteria for Nuclear Power Plants, Domestic Licensing of Production and Utilization Facilities, Energy. Title 10, Code of Federal Regulations, Part 50, Appendix S, U.S. Nuclear Regulatory Commission, Washington, DC.

3.10-6 IEEE Recommended Practices for Seismic Qualification of Class 1E Equipment for Nuclear Power Generating Stations. American National Standards Institute/Institute of Electrical and Electronics Engineers (ANSI/IEEE) Std 344-1987.

3.10-7 Seismic Qualification of Electric and Mechanical Equipment for Nuclear Power Plants. Regulatory Guide, 1.100, Rev. 2, U.S. Nuclear Regulatory Commission, Washington, DC, June 1988.

3.10-8 IEEE Recommended Practice for Seismic Qualification of Class 1E Equipment for Nuclear Power Generating Stations. Institute of Electrical and Electronics Engineers (IEEE) Std 344 -2004.

3.10-9 Seismic and Dynamic Qualification of Mechanical and Electrical Equipment. NUREG-0800, Standard Review Plan 3.10, Rev. 3, U.S. Nuclear Regulatory Commission, Washington, DC, March 2007.

3.10-10 Boiler and Pressure Vessel Code. “Section III, Division 1, Nuclear Power Plant Components,” American Society of Mechanical Engineers.

3.10-11 Functional Specification for Active Valve Assemblies in Systems Important to Safety in Nuclear Power Plants. Regulatory Guide 1.148, U.S. Nuclear Regulatory Commission, Washington, DC, March 1981.

3.10-12 Qualification of Active Mechanical Equipment Used in Nuclear Power Plants. American Society of Mechanical Engineers (ASME) QME-1-2002.

3.10-13 Damping Values for Seismic Design of Nuclear Power Plants. Regulatory Guide 1.61, Rev. 1, U.S. Nuclear Regulatory Commission, Washington, DC, March 2007.

3.10-14 Guidance for Seismic Qualifications of Class 1 Electric Equipment for Nuclear Power Generating Stations. Institute of Electrical and Electronics Engineers (IEEE) Std 344-1971.

3.10-15 IEEE Standard for Qualifying Class 1E Equipment for Nuclear Power Generating Stations. Institute of Electrical and Electronics Engineers (IEEE) Std 323-1974.

3.10-16 Combining Modal Responses and Spatial Components in Seismic Response Analysis. Regulatory Guide 1.92, Rev. 2, U.S. Nuclear Regulatory Commission, Washington, DC, July 2006.

3.10-17 IEEE Standard for Qualification of Actuators for Power-Operated Valve Assemblies with Safety-Related Functions for Nuclear Power Plants, Institute of Electrical and Electronics Engineers (IEEE) Std 382-1996 (R2004).

3.10-18 Rules for Inservice Inspection of Nuclear Power Plant Components, ASME Boiler Pressure and Vessel Code. ASME Section XI, American Society of Mechanical Engineers.

3.10-19 Self-Operated and Power-Operated Safety-Related Valves Functional Specification Standard. ANSI/ASME N278.1-1975 (Re-designated and Reaffirmed 1992), American National Standards Institute/American Society of Mechanical Engineers.

3.11 Environmental Qualification of Mechanical and Electrical Equipment

Introduction

This section describes the implementation of the US-APWR environmental qualifications (EQ) program. The US-APWR EQ Program demonstrates and documents compliance with the requirements of 10 CFR 50, Appendix A, General Design Criteria 4, "Environmental and Dynamic Effects Design Bases," (Reference 3.11-1) which requires:

> Structures, systems, and components important to safety shall be designed to accommodate the effects of and to be compatible with the environmental conditions associated with normal operation, maintenance, testing, and postulated accidents, including loss-of-coolant accidents.

Electrical, mechanical, and I&C (both analog and digital) equipment designated as safety-related or important to safety is addressed in the EQ Program to verify it is capable of performing its design function(s) under all anticipated service conditions. These service conditions are defined in 10 CFR 50.49(b)(1)(ii), (Reference 3.11-2) and are listed below. The equipment addressed by the EQ Program is identified in Appendix 3D.

The typical design basis events include the following:

1. Normal operating conditions (e.g., refueling, shutdown, startup, operating)
2. AOO (e.g., plant trips, testing)
3. DBAs (e.g., LOCA, HELB)
4. External events (e.g., loss of offsite power)
5. Natural phenomena (e.g., earthquake, tornado)

The implementation of the US-APWR EQ Program is described in a Technical Report titled, US-APWR Equipment Environmental Qualification Program issued as a separate report (Reference 3.11-3).

The Technical Report describes the EQ Program applicable to each licensed US-APWR. The Report describes the EQ process and its implementation during the design, procurement, construction, startup, and turnover phases of a US-APWR plant project. It identifies the various qualification programs, procedures, and policies that MHI and the applicable Architect/Engineer/Constructor implements in conjunction with the delivery of a US-APWR plant. The Report discusses the application of the EQ Program to both domestic and international suppliers, of the electrical and mechanical equipment described in Appendix 3D of the DCD. The EQ Program, quality assurance, record keeping, and associated programmatic interfaces is described to facilitate implementation of the post-turnover EQ Program by the licensee. The COL Applicant is to provide a schedule showing the EQ Program proposed implementation milestones.

The COL Applicant is responsible for assembling and maintaining the environmental qualification document, which summarizes the qualification results for all equipment identified in Appendix 3D, for the life of the plant. The environmental qualification document is to address the following information:

- Identification of the equipment and applicable plant, system, and equipment selection basis, particularly with respect to normal environmental conditions, AOOs, accident, post-accident, and test environmental conditions.
- Designated functional requirements, the definition of the applicable environmental parameters, and the documentation of the qualification process employed to demonstrate that the required environmental compliance is achieved.
- Identification of the test environmental parameters and the methodology used to qualify the equipment located in harsh environments.
- A summary of environmental conditions and qualified conditions for the equipment located in a harsh environment zone are presented in the system component evaluation work sheets or packages and are compiled in the environmental qualification document.

The seismic qualification requirements applicable to this equipment are described in Section 3.10 and the environmental requirements are listed in Appendix 3D.

The COL Applicant is to describe periodic tests, calibrations, and inspections to be performed during the life of the plant, which verify the identified equipment remains capable of fulfilling its intended function. The procedures and results of qualification by tests, analyses, or other methods for the safety-related equipment are documented and maintained as part of the unit's environmental qualification document.

Purpose

The purpose of the EQ Program is to provide a programmatic basis to identify, document and confirm compliance with General Design Criteria 4 and 10 CFR 50.49 (References 3.11-1, 3.11-2). Compliance with the EQ Program requirements is necessary to assure that the equipment is capable of performing its design safety function(s) under all normal environmental conditions, AOOs, and accident and post-accident environmental conditions.

The environmental conditions which the equipment qualification process addresses include:

1. Environment (temperature, pressure, spray, submergence, and humidity)
2. Seismic (mechanical shock)
3. Chemical (reactions and composition issues)
4. Radiation (normal [including long term] and accident level exposures)
5. Performance (voltage, load, aging effects, allowable margins, etc.)
6. Synergistic effects (e.g., system interactions, testing stresses)

The US-APWR EQ Program is generic to all US-APWRs and is, in turn, implemented for each specific plant licensed. This EQ process is illustrated in Figure 3.11-1. The implementation of the US-APWR EQ Program follows distinct phases. The EQ Program is defined herein and is, in turn, implemented during a specific plant's design, procurement, construction, startup, and operational phases. The reason for this

sequence is that the programmatic responsibilities shift as a specific plant is designed and constructed. At the onset of a project, the EQ Program is the responsibility of the plant vendor. The program is implemented by the vendor and the project architect/engineer during the design phases. At this point, the required environmental parameters, listed above, are finalized by analysis. These parameters are then factored into equipment procurement specifications, where applicable, during the procurement phase. In some cases, the equipment is qualified by testing or other means. Compliance with EQ requirements is documented and this information is assembled as the project progresses. The EQ Program continues during the construction and startup phases (i.e., additional testing and analysis) and as the plant is nearing completion, the EQ Program responsibilities, including the assembled documentation, is transferred to the plant owner. This information is reviewed by the NRC and the demonstration of satisfactory compliance with EQ requirements is a condition for obtaining the plant-operating license. The plant owner is responsible for maintaining the EQ Program for the operating life of the plant.

Environmental Design Basis

The EQ Program qualification process uses the following environmental condition definitions:

- **Normal Operating Conditions** – The planned, unrestricted, reactor operations. These are the everyday working environmental parameters that the equipment is expected to experience (i.e., the conditions that the equipment is designed to see during normal plant operations).
- **Abnormal Operating Conditions** – Any deviation from normal operating conditions.
- **Test Conditions** – The actuation, operation, or establishment of specified conditions to evaluate the performance or integrity of systems, or components unless explicitly stated otherwise.
- **Accident Conditions** – An unexpected event occurring during normal operating conditions, which may have potentially harmful effect.
- **Post-Accident Conditions** – The end result of accidental conditions.

These environmental conditions are normally associated with various plant areas by environmental zones or locations. Environmental conditions within these zones are defined as either mild or harsh based on the anticipated most extreme condition anticipated for this zone.

3.11.1 Equipment Location and Environmental Conditions

The US-APWR EQ Program complies with the applicable requirements delineated in RG 1.89 (Reference 3.11-4). However, while NUREG-0588 (Reference 3.11-5) is not directly applicable, this NUREG did provide guidance on classifying equipment based on generic locations (A, B, C, and D). A similar approach is used for the US-APWR EQ Program. These locations are described below.

Equipment Category A Location: Equipment that will experience the environmental conditions associated with a DBA for which it must function to mitigate the accident and that will be qualified to demonstrate operability in the accident environment for the time required for accident mitigation with safety margin to failure (per 10 CFR 50, Appendix E [Reference 3.11-6], and NUREG-0588 [Reference 3.11-5]).

Equipment Category B Location: Equipment that will experience the environmental conditions associated with DBAs through which it need not function for the mitigation of said accidents, and through which it must not fail in a manner detrimental to plant safety or accident mitigation, and that will be qualified to demonstrate the capability to withstand any accident environment for the time during which it must not fail with safety margin to failure.

Equipment Category C Location: Equipment that will experience the environmental condition of DBAs through which it need not function for mitigation of said accidents, and whose failure (in any mode) is deemed not detrimental to plant safety or accident mitigation, and need not be qualified for any accident environment, but will be qualified for its non-accident service environment.

Equipment Category D Location: Equipment that will not experience environmental condition of DBAs and that will be qualified to demonstrate operability under the expected extremes for its non-accident service environment.

3.11.1.1 Equipment Identification

Safety-related systems are identified in Section 3.2. Safety-related and important to safety components which make up these systems are listed in Appendix 3D. The equipment is identified by system, location, type (electrical or mechanical or both), environment, and associated environmental parameters. Appendix 3D provides a brief explanation as to how this equipment was identified and the associated analysis that was performed to establish the required environmental parameters. The COL Applicant is to identify the site-specific equipment to be addressed in the EQ Program, including locations and environmental conditions.

The identification list and a summary of electrical and mechanical equipment qualification results are maintained as part of the equipment qualification record file in accordance with Quality Assurance Criteria for Nuclear Power Plants and Fuel Reprocessing Plants (Reference 3.11-7).

3.11.1.2 Definition of Environmental Conditions

The general environmental parameters that are addressed in the qualification process are temperature, pressure, humidity, chemical effects (including pH), radiation, aging, submergence, and synergistic effects. An allowance for adequate margin in these parameters is provided in the program. These parameters reflect the appropriate consideration of the most severe natural phenomena, which have been recorded in the past 60 year period or identified by analysis. Optionally, the COL Applicant may revise the parameters based on site-specific considerations. Two plant environmental conditions, harsh or mild, are used in the qualification process. These are defined in the paragraphs below.

Harsh Environment

Equipment that must withstand and is subject to the environmental conditions that would exist, before, during, and following a DBA is qualified for use in harsh environments. A DBA, such as a LOCA could subject this equipment to elevated pressures, temperatures, humidity (spray or submergence), radiation, and chemical effects (including post accident pH control). This equipment must operate without a loss of its safety function, for the time required to perform its engineered safeguards function(s). These environmental conditions that the equipment is qualified for include applicable time dependent temperature and pressure profiles, humidity, chemical effects, radiation, aging, submergence, and those synergistic effects, which have a significant effect on the equipment performance. Equipment identified in Appendix 3D as being qualified for harsh environment includes the following:

a. Equipment located within containment
b. Equipment subject to HELBs (e.g., MSLB) both inside and outside of containment
c. Other SSCs which connect, support, or tie into or which can influence the equipment listed in “a” and “b”

Equipment items “b” and “c” are qualified for harsh environment only when associated with safety-related equipment or are necessary to support the operation of the equipment listed in Appendix 3D. For brevity, Appendix 3D only identifies the associated equipment by device tag or instrument loop. However, the associated components, sensors, supports, and mechanical piping, valves, cables, penetrations, devices, and similar items needed for a fully functional device (e.g., motor operated valve) are also qualified in the EQ Program. The term sensor can refer to a transmitter, a resistance temperature detector, a thermocouple, or other transducer. The associated cables, connectors, terminals, preamplifiers, referenced junction boxes, or other electronic signal processing equipment, including digital components, that are located in the immediate proximity of the sensor are also subjected to the same harsh environmental conditions and associated EQ Program qualification process. Electrical equipment located in harsh environments is qualified pursuant to the requirements delineated in IEEE Std 323-1974 (Reference 3.11-8).

Mild Environment

Mild environments are similar to those in a factory or office. A mild environment is one in which conditions are not expected to vary during normal and off-normal conditions, including DBAs. The plant MCR, as well as many equipment rooms, are considered mild environments. Normally, equipment located in mild environments can and is qualified by designating the appropriate environmental parameters in the purchase specifications and receiving certification from the supplier or vendor that this equipment will operate satisfactorily in that environment. Seismic and aging qualification may still require testing or additional analysis.

3.11.1.3 Equipment Operability Times (Term)

Equipment operating times and their bases are shown in Appendix 3D.

3.11.1.4 Standard Review Plan Evaluation

Design Control: The US-APWR EQ Program establishes procedures to assure the proper control during the design process to identify, document, and implement the specific EQ parameters for each piece of equipment designated in Appendix 3D. EQ parameters are established during the detailed design and analysis phase of the US-APWR development (see Figure 3.11-1). The applicable design basis codes and standards, equipment performance requirements, and associated EQ parameters for the equipment and the associated systems and components listed in Appendix 3D are documented in the corresponding equipment specifications, drawings, procedures, instructions, and qualifications packages consistent with the requirements of 10 CFR 50, Appendix B, Section III (Reference 3.11-7).

The specific normal and transient service conditions are identified in the design process for equipment located both inside and outside of the plant. These service conditions may include temperature extremes, including freezing, as part of the environmental requirements. Special considerations (which include heat tracing, insulation, wind shields, etc.) are addressed in the design process for maintaining system operability for outdoor components including instrument sensing lines (Reference 3.11-9).

3.11.2 Qualification Tests and Analyses

ITAAC is also known as the plant operational program review. An applicant or licensee who references the US-APWR Design Certification rule performs and demonstrates conformance with the ITAAC in conjunction with the licensing process. A number of tests and design verifications are performed in conjunction with the US-APWR EQ Program are summarized in Table 3.11-1. Verification of conformance to the EQ Program objectives includes performance of various construction and startup tests and then after turnover to the licensee, periodic surveillances and inspections. Routine maintenance and calibrations performed by the licensee are intended to detect degradations in SSCs in time to allow repairs or replacement of these items. Licensee ISI programs as well as replacement of plant components within the plant's 60-year lifetime assure compliance with EQ Program requirements. These licensee programs minimize the possibility of unknown effects, including common mode failures going undetected. The need for additional plant specific tests is developed as identified and included during the application process.

Aging: The equipment is qualified for aging by test or analysis, which considers natural or artificial (accelerated) aging to its end-of-installed life condition. Consideration is given to all significant types of degradation, which can have an effect on the functional capability of the equipment. Since the effects of aging are sometimes difficult to quantify, a rigorous, periodic inspection, test, and calibration program is implemented during the life of the plant to verify that systems and components remain operational.

Synergistic Effects: The US-APWR EQ process involves detailed testing during the procurement, construction, and startup phases. As equipment is installed and tested, synergistic effects are evaluated to verify that these effects do not adversely impact the qualification of the electrical equipment. An example of this testing is the onsite testing for electromagnetic and radio frequency interference. Testing is performed that complies with the guidance provided in RG 1.180, Guidelines for Evaluating Electromagnetic and Radio Frequency Interference in Safety-Related Instrument and Control Systems

(Reference 3.11-10). Other tests are conducted to verify satisfactory performance of mechanical and electrical systems in their installed environments. Examples of these tests include thermal expansion tests, vibration tests, and process interaction tests (usually performed in conjunction with hot functional testing). These various tests augment the EQ process and assist in meeting the intent of evaluating synergistic effects that could have an adverse impact on safety and important to safety equipment.

3.11.2.1 Environmental Qualification of Electrical and Mechanical Equipment

The environment qualification parameters vary according to the equipment location and the type of structure in which it is located.

The environmental conditions shown in Appendix 3D reflect the worst-case scenario identified by analysis of a compendium of accident conditions for that location. The environmental parameters shown are the expected conditions and do not include any tolerance margin. Hence, to allow for tolerance, the margins between the most severe specified service conditions of the plant and the condition used for the qualification are evaluated. The result is then included in the parameters to account for tolerances when documenting satisfactory compliance of the equipment with environmental conditions. For the electrical and mechanical equipment, a 60-year life is used for the design basis unless otherwise stated. The ability of this equipment to operate over this period is verified by periodic inspection and testing. Equipment that does not have a 60-year service life is expected to be replaced or otherwise evaluated during the life of the plant on a scheduled basis.

During certain DBAs, depending upon the nature of the equipment's function during and after the DBA, some electrical and mechanical equipment may only be required to function for an interval of a few minutes of the accident up to approximately 10 hours.

Such equipment is shown to remain functional in the accident environment for period of at least 1 hour in excess of the time assumed in the accident analysis unless a time margin of less than 1 hour can be justified.

The equipment required to operate under these conditions is qualified considering the following:

- The sequence of events, which may affect the operations of the equipment.
- The use of the equipment during and after recovery operations.
- A determination that the failure of the equipment after performance of its safety function is not detrimental to plant safety nor can it mislead plant operators.
- Determination that the margin applied to the minimum operability time, when combined with other test margins, accounts for the uncertainties associated with the use of analytical techniques in the derivation of environmental parameters, the number of units tested, production tolerances, and test equipment inaccuracies.

For equipment with a required time of operation during an accident of more than 10 hours, it is demonstrated that it remains functional under accident conditions for a period of time at least 10% longer than the required time of operation.

The US-APWR EQ Program follows the guidance provided in RG 1.89 (Reference 3.11-4), for electrical components and instruments. RG 1.89 (Reference 3.11-4) endorses IEEE Std 323-1974 (Reference 3.11-8) which is part of the implementing basis for the US-APWR EQ Program. The equipment location, relative to flooding and spray (LOCA or HELB), is factored into the US-APWR EQ qualification process. Other applicable RGs and requirements include the following:

- Regulatory Guide 1.40, Qualification Tests for Continuous-Duty Motors Installed Inside the Containment of Water Cooled Nuclear Power Plants (Reference 3.11-11).
- Regulatory Guide 1.63, Electrical Penetration Assemblies in Containment Structures for Nuclear Power Plants (Reference 3.11-12).
- Regulatory Guide 1.73, Qualification Tests of Electric Valve Operators Installed Inside Containment of Nuclear Power Plants (Reference 3.11-13).
- Regulatory Guide 1.89 Environmental Qualification of Certain Electric Equipment Important to Safety in Nuclear Power Plants (Reference 3.11-4).
- Regulatory Guide 1.97, Criteria for Accident Monitoring Instrumentation for Nuclear Power Plants (Reference 3.11-14).
- Regulatory Guide 1.131 (draft), Qualification Tests of Electric Cables and Field Splices for Light Water Cooled Nuclear Power Plants (Reference 3.11-15).
- Regulatory Guide 1.151, Instrument Sensing Lines (Reference 3.11-9).
- Regulatory Guide 1.156, Environmental Qualifications of Connection Assemblies for Nuclear Power Plants (Reference 3.11-16).
- Regulatory Guide 1.158, Qualification of Safety-Related Lead Storage Batteries for Nuclear Power Plants (Reference 3.11-17).
- Regulatory Guide 1.180, Guidelines for Evaluating Electromagnetic and Radio Frequency Interference in Safety-Related Instrumentation and Control Systems (Reference 3.11-10).
- Regulatory Guide 1.183, Alternative Radiological Source Term for Evaluating Design Basis Accidents at Nuclear Power Reactors (Reference 3.11-18).
- Adherence to General Design Criteria 1, 2, 4 and 23 of 10 CFR 50, Appendix A (Reference 3.11-1).
- Quality Assurance in accordance with 10 CFR 50, Appendix B (Reference 3.11-7).

3.11.2.2 Environmental Qualification of Mechanical Equipment

A discussion of the EQ of the mechanical equipment is included in Subsection 3.11.2.1 and further elaborated in this sub-section. Active and passive mechanical equipment is qualified as part of the US-APWR EQ Program. Active mechanical equipment qualification is discussed in Subsection 3.9.3 and in Appendix 3D. The EQ program provides for qualification of non-metallic components such as gaskets, O-rings, seals,

lubricants for safety-related and important to safety mechanical equipment. Non-active mechanical equipment that is equipment whose primary safety function is structural integrity (support or pressure boundary), is qualified pursuant to the requirements of ASME Boiler and Pressure Vessel Code, Section III. In addition, certain mechanical structures are qualified in conjunction with plant startup testing (e.g., the reactor containment structure is qualified, in part, by the performance of various construction tests [e.g., weld certifications] and the performance of the containment ILRT).

3.11.3 Qualification Test Results

Environmental qualification of the equipment listed in Appendix 3D may rely on testing in conjunction with the verification process. Where the qualification process involves testing, the various tests are conducted following written test procedures in compliance with the requirements of 10 CFR 50, Appendix B, Criterion XI, Test Control (Reference 3.11-7). These tests may apply to aging, seismic, radiation, or environmental qualification parameters.

The tests may be performed by the manufacturers, qualified testing laboratories, or during the construction and startup phases as part of the ITAAC process. Procurement associated testing results are documented prior to installation. The preoperational and operational tests results are recorded and verified against acceptance limits contained in the applicable design documents, and associated environmental parameters determined in support of the formulation of Appendix 3D.

The testing is performed to verify that safety-related SSCs, as well as those important to safety, operate satisfactorily in service and in accordance with their design basis. The test results are documented and evaluated to assure that EQ requirements have been satisfied.

Equipment that has been previously qualified by means of tests and analyses may not need to be retested for qualification provided proper documentation of such tests and analyses is available (Reference 3.11-4).

The COL Applicant is to describe how the results of the qualification tests are to be recorded in an auditable file in accordance with requirements of 10 CFR 50.49 (j) (Reference 3.11-2). Such a record is maintained for the entire period during which the related equipment remains installed in the plant, stored for future use, or is held for permit verification.

3.11.4 Loss of Ventilation

HVAC systems provide ventilation, help reduce air infiltration, and maintain pressure relationships between spaces. The design and evaluation of the plant's HVAC systems is described in Section 9.4. Electrical equipment located in conditioned spaces is evaluated for performance during the loss of HVAC type events. Equipment which may be impacted by inadequate ventilation or a loss of environmental control is identified during the design process. In many cases, this equipment is only required to function for a short period of time during or following a DBA, in which case, a loss of ventilation may impact the equipment after it has fulfilled its safety function. Equipment impacted by a loss of environmental control is qualified pursuant to the implementation of the US-APWR EQ Program.

The COL Applicant is to qualify site-specific electrical and mechanical equipment (including instrumentation and control, and certain accident monitoring equipment) using an equivalent qualification process to that delineated for the US-APWR Standard Plant. This includes equipment that is subject to environmental control systems including heat tracing and air conditioning.

3.11.5 Estimated Chemical and Radiation Environment

The COL Applicant is to identify chemical and radiation environmental requirements for site-specific qualification of electrical and mechanical equipment (including instrumentation and control, and certain accident monitoring equipment). This equipment is to be qualified using an equivalent qualification process to that delineated for the US-APWR Standard Plant.

3.11.5.1 Chemical Environment

The adverse effects of various chemicals used within the plant are normally contained by design. However, during a DBA, various chemicals can be released into the equipment's environment, which could impair the ability of the equipment to operate. The impact of the various chemicals used in the plant is factored into the design and EQ process. Chemical exposure also includes the potential for exposure to hydrogen based on a 100% fuel-clad metal-water reaction (10 CFR 50.44(c), [Reference 3.11-19]). Equipment subject to chemical exposure, including submergence, are qualified with concentrations of chemicals equivalent or more severe than those resulting from the most limiting mode of the plant operations associated with DBAs. Mechanical equipment is evaluated during the design (analysis) and procurement phases for exposure to various chemicals applicable to normal and off normal conditions. Requirements to be able to withstand the effects of chemical exposure are factored into the procurement process. Equipment subject to chemical exposure following a DBA is identified and qualified, pursuant to the implementation of the US-APWR EQ Program.

3.11.5.2 Radiation Environment

Areas in the plant are subject to varying levels of radiation exposure during normal and accident conditions. Radiation environments also exist in those plant areas where there is the potential for airborne contamination, for those process and effluent streams where contamination is possible, and in accessible areas as a result of unusual radiological events. The normal operational radiation exposure is based on the radiation sources (source term) provided in Chapter 12.

The radiation sources presented in this DCD are developed from the DBA available data and in accordance with NUREG-1465 (Reference 3.11-20). The radiation dose rates and integrated doses of neutrons, beta, and gamma radiation which are associated with normal, accident, post-accident, test, and harsh environmental conditions for various plant areas and systems, are presented in Appendix 3D. Their parameters are presented in time-based units, wherever applicable.

The expected levels of radiation exposure factored into the design process are based on the type of radiation, the total dose expected during normal operation over the installed life of the equipment, and the radiation environment associated with the most severe DBA during or following an accident in which the equipment is required to remain

functional, including the radiation resulting from re-circulating fluids for equipment located near the re-circulating lines and including dose-rate effects. Equipment that will not be exposed to total integrated doses of 10^4 Rads as a result of a DBA is not qualified for radiation exposure in most cases. In all cases, each piece of equipment in a potential harsh environment is evaluated for the need for qualification due to radiation exposure.

Electrical and mechanical equipment subject to radiation exposure is qualified for use in the US-APWR pursuant to the implementation of the US-APWR EQ Program. For equipment that is only located in areas considered harsh by the potential presence of radiation, this equipment is qualified by analysis and partial test data with the appropriate considerations for margins and aging effects.

3.11.6 Qualification of Mechanical Equipment

The qualification of mechanical equipment is included in Subsection 3.11.2.1.

The COL Applicant is to provide the site-specific mechanical equipment requirements. This equipment is to be qualified using an equivalent qualification process to that delineated for the US-APWR Standard Plant.

3.11.7 Combined License Information

COL 3.11(1) *The COL Applicant is responsible for assembling and maintaining the environmental qualification document, which summarizes the qualification results for all equipment identified in Appendix 3D, for the life of the plant.*

COL 3.11(2) *The COL Applicant is to describe how the results of the qualification tests are to be recorded in an auditable file in accordance with requirements of 10 CFR 50.49 (j).*

COL 3.11(3) *The COL Applicant is to provide a schedule showing the EQ Program proposed implementation milestones.*

COL 3.11(4) *The COL Applicant is to describe periodic tests, calibrations, and inspections to be performed during the life of the plant, which verify the identified equipment remains capable of fulfilling its intended function.*

COL 3.11(5) *The COL Applicant is to identify the site-specific equipment to be addressed in the EQ Program, including locations and environmental conditions.*

COL 3.11(6) *The COL Applicant is to qualify site-specific electrical and mechanical equipment (including instrumentation and control, and certain accident monitoring equipment) using an equivalent qualification process to that delineated for the US-APWR Standard Plant.*

COL 3.11(7) *The COL Applicant is to identify chemical and radiation environmental requirements for site-specific qualification of electrical and mechanical equipment (including instrumentation and control, and certain accident monitoring equipment).*

COL 3.11(8) The COL Applicant is to provide the site-specific mechanical equipment requirements.

COL 3.11(9) Optionally, the COL Applicant may revise the parameters based on site-specific considerations.

3.11.8 References

3.11-1 General Design Criteria for Nuclear Power Plants, Domestic Licensing of Production and Utilization Facilities, Energy. Title 10, Code of Federal Regulations, Part 50, Appendix A, U.S. Nuclear Regulatory Commission, Washington, DC.

3.11-2 Environmental Qualification of Electric Equipment Important to Safety for Nuclear Power Plants, Domestic Licensing of Production and Utilization Facilities, Energy. Title 10, Code of Federal Regulations, Part 50.49, U.S. Nuclear Regulatory Commission, Washington, DC.

3.11-3 US-APWR Equipment Environmental Qualification Program, Technical Report Mitsubishi Heavy Industries, Later.

3.11-4 Environmental Qualification of Certain Electrical Equipment Important to Safety for Nuclear Power Plants, Regulatory Guide 1.89, U.S. Nuclear Regulatory Commission, Washington, DC, 1984.

3.11-5 Interim Staff Position on Environmental Qualification of Safety-Related Electrical Equipment. NUREG-0588, U.S. Nuclear Regulatory Commission, Washington, DC.

3.11-6 Emergency Planning and Preparedness for Production and Utilization Facilities, Domestic Licensing of Production and Utilization Facilities, Energy. Title 10, Code of Federal Regulations, Part 50, Appendix E, U.S. Nuclear Regulatory Commission, Washington, DC.

3.11-7 Quality Assurance Criteria for Nuclear Power Plants and Fuel Reprocessing Plants, Domestic Licensing of Production and Utilization Facilities, Energy. Title 10, Code of Federal Regulations, Appendix B, III, XVII, XI, U.S. Nuclear Regulatory Commission, Washington, DC.

3.11-8 IEEE Standard for Qualifying Class 1E Equipment for Nuclear Power Generating Stations, IEEE Std 323-1974, Institute of Electrical and Electronics Engineers (endorsed by Regulatory Guide 1.89 and NUREG-0588).

3.11-9 Instrument Sensing Lines, Regulatory Guide 1.151, U.S. Nuclear Regulatory Commission, Washington, DC, July 1983.

3.11-10 Guidelines for Evaluating Electromagnetic and Radio Frequency Interference in Safety-Related Instrumentation and Control Systems. Regulatory Guide 1.180, Rev. 1, U.S. Nuclear Regulatory Commission, Washington, DC, October, 2003.

3.11-11 Qualification Tests of Continuous-Duty Motors Installed Inside the Containment of Water-Cooled Nuclear Power Plants. Regulatory Guide 1.40, U.S. Nuclear Regulatory Commission, Washington, DC, March 1973.

3.11-12 Electric Penetration Assemblies in Containment Structures for Light Water-Cooled Nuclear Power Plants. Regulatory Guide 1.63, Rev. 3, U.S. Nuclear Regulatory Commission, Washington, DC, February 1987.

3.11-13 Qualification Tests of Electric Valve Operators Installed Inside the Containment of Nuclear Power Plants. Regulatory Guide 1.73, U.S. Nuclear Regulatory Commission, Washington, DC, January 1974.

3.11-14 Criteria for Accident Monitoring Instrumentation for Nuclear Power Plants. Regulatory Guide 1.97, Rev. 4, U.S. Nuclear Regulatory Commission, Washington, DC, June 2006.

3.11-15 Qualification Tests of Electric Cables, Field Splices, and Connections for Light-Water-Cooled Nuclear Power Plants. Regulatory Guide 1.131, U.S. Nuclear Regulatory Commission, Washington, DC, August 1977.

3.11-16 Environmental Qualification of Connection Assemblies for Nuclear Power Plants. Regulatory Guide 1.156, U.S. Nuclear Regulatory Commission, Washington, DC, November 1987.

3.11-17 Qualification of Safety-Related Lead Storage Batteries for Nuclear Power Plants. Regulatory Guide 1.158, U.S. Nuclear Regulatory Commission, Washington, DC, February 1989.

3.11-18 Alternative Radiological Source Terms for Evaluating Design Basis Accidents at Nuclear Power Reactors. Regulatory Guide 1.183, U.S. Nuclear Regulatory Commission, Washington, DC, July 2000.

3.11-19 Combustible Gas Control System in Light-Water-Cooled Power Reactors, Domestic Licensing of Production and Utilization Facilities, Energy. Title 10, Code of Federal Regulations, Part 50.44(c), U.S. Nuclear Regulatory Commission, Washington, DC.

3.11-20 Accident Source Terms for Light-Water Nuclear Power Plants – Final Report. NUREG-1465, U.S. Nuclear Regulatory Commission, Washington, DC.

Table 3.11-1 Summary of US-APWR EQ Program Mechanical SSC Interfaces

EQ Interfaces Information Requirement		DCD Chapter (Section #)
(1)	Verification of the design, installation, inspection, and testing of containment systems	Subsections 6.2.1 to 6.2.6
(2)	Verification of the design, installation, inspection, and testing of the Residual Heat Removal System	Subsection 5.4.7
(3)	Verification of the design, installation, inspection, and testing of the Emergency Core Cooling System	Section 6.3
(4)	Verification of the Accident Analysis	Chapter 15
(5)	Verification of the functional design, installation, inspection, and testing of the I&C system and digital equipment	Chapter 7
(6)	Verification of the design, installation, inspection, and testing of the electrical power systems	Chapter 8
(7)	Verification of the design, installation, inspection, and testing of the Containment Spray System	Subsection 6.5.2
(8)	Verification of the adequacy of chemical conditions to accident and post accident EQs	Subsection 6.5.2
(9)	Verification of the adequacy of ventilation system for safety-related equipment	Subsection 9.4.5
(10)	Adequacy of 10 CFR 50, Appendix B Criteria III, XI, and XVII for Quality Assurance	Chapter 17
(11)	Verification of Radiological consequences with DBA	Subsection 15.0.3
12)	Functional design verification of:	
(12-a)	adverse flow effects on mechanical, electrical equipment evaluation	Subsection 3.9.5
(12-b)	Design qualification and dynamic restrain of equipment	Subsection 3.9.6
(12-c)	Natural Phenomena and external events protection for mechanical and electrical equipment	Chapter 3 (appropriate sections)
(13)	Verification of equipment functionality during and after being exposed to a DBA	Subsection 6.2.5
(14)	COL reviews of operation programs	Section 13.4

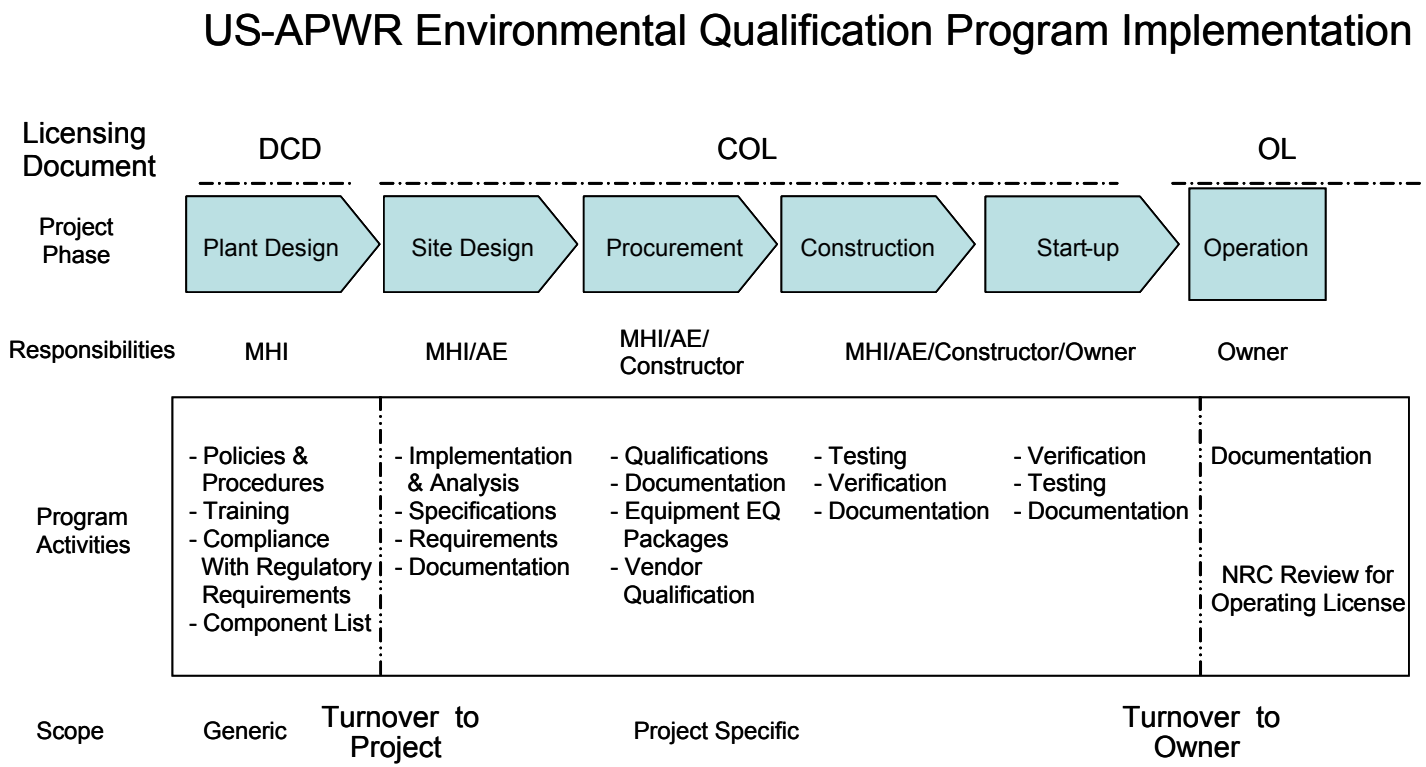

DCD – Design Control Document – Generic to all US - APWRS

COL – Combined License – Specific to each plant/site

OL - Operating License – Issued to plant owner/operator

Figure 3.11-1 Project EQ Program Implementation Framework

3.12 Piping Design Review

3.12.1 Introduction

This section covers the design of the US- APWR plant and site-specific piping systems and piping supports which comprise seismic category I and non-seismic category I (seismic category II and non-seismic) piping systems. Seismic categories are defined in Subsection 3.2.1. The design of the RCL piping is covered by Subsection 3.9.3.

Generally, all ASME Code, Section III, Classes 1, 2, and 3 piping systems belong to seismic category I piping class.

The seismic category II piping, such as ASME B31.1 (Reference 3.12-1), is evaluated for seismic category requirements as stipulated in this section.

The non-seismic piping systems are designed to seismic requirements based on the applicable building code requirements appropriate for a power plant facility.

This section discusses the adequacy of the structural integrity as well as the functional capability of the seismic category I piping systems, and their associated supports. Piping systems are designed to perform their safety-related functions under all postulated combinations of normal operating conditions, system operating transients, postulated pipe breaks, and seismic category I events (i.e., SSE and OBE). This includes pressure retaining piping components and their supports, instruments lines, and the interaction of seismic category II piping and associated supports with seismic category I piping and associated supports. This section covers the design transients and resulting loads and load combinations with appropriate specified design and service limits for seismic category piping and piping supports, including those designed as ASME Code, Section III, Division 1, Class 1, 2 and 3 (Reference 3.12-2), and those covered by the ASME B31.1 Code for Pressure Piping, Power Piping (Reference 3.12-1).

3.12.2 Codes and Standards

Codes and standards used in the design of piping systems and piping supports are consistent with 10 CFR 50, Appendix A (Reference 3.12-3), GDC 1, GDC 2, GDC 4, GDC 14, and GDC 15 as described in Section 3.1, and 10 CFR 50, Appendix S (Reference 3.12-4).

3.12.2.1 American Society of Mechanical Engineers Boiler and Pressure Vessel Code

Piping analysis for the US-APWR uses the 1992 Edition including 1992 Addenda of the ASME Code, Section III, Division 1, Subsections NB, NC, and ND (Reference 3.12-2).

3.12.2.2 American Society of Mechanical Engineers Code Cases

ASME, Code Cases N-122-2, N-318-5, N-391-2, N-392-3, and N-319-3 (Reference 3.12-5) are applicable for the design of the piping system and the piping supports for the US-APWR. These code cases are acceptable on the basis of Regulatory Guide (RG) 1.84, Rev.34 (Reference 3.12-6). Other ASME code cases may be used in the design certification if they are either conditionally or unconditionally

approved in RG 1.84 (Reference 3.12-6). Code cases listed RG 1.193 (Reference 3.12-7) is not to be utilized without the approval of the NRC.

3.12.2.3 Design Specification

The design specification and the design reports are to be developed in accordance with the ASME Code, Section III, Division 1 (Reference 3.12-2).

3.12.3 Piping Analysis Methods

Seismic analysis for all seismic category I and non-seismic category I (seismic category II and Non-seismic) piping systems use methods in accordance with NUREG-0800, SRP 3.7.3, Rev.3 (Reference 3.12-8). These methods, as discussed below, include the response spectrum method, time history method, or where applicable, the equivalent static load method. For modeling supports in the piping analysis, the de-coupled support model is used, whereby the support is modeled as a restraint with specified support stiffness; or an integrated support model is used, whereby the actual structural model of the support is included in the analysis. In the de-coupled support modeling technique, requirements to maintain minimum support stiffness and limit deflection under dynamic load to a pre-set limit have to be addressed separately as described in Subsection 3.12.6.7, where as, in the integrated support modeling technique, these parameters are considered and no separate check is required.

3.12.3.1 Experimental Stress Analyses

Experimental stress analysis methods are not used for the design of piping and supports

3.12.3.2 Modal Response Spectrum Method

The response spectrum method consists of either uniform support motion (USM) or independent support motion (ISM) technique. To account for the uncertainty in the seismic response spectrum, either the peak broadening method or the peak shifting method is used for the design and analysis of piping systems.

3.12.3.2.1 Peak Broadening Method

The peak broadened ISRS are generated according to RG 1.122, Rev.1 (Reference 3.12-9).

The design ISRS are peak broadened by a minimum of ±15%.

3.12.3.2.2 Peak Shifting Method

Peak broadening may become an overly conservative method in piping design. As an alternative, peak shifting may be considered. Peak shifting considers a minimum of ±15% uncertainty in the peak structural frequencies.

The method is applied as follows:

- The natural frequencies $(f_e)_n$ of the piping system to be qualified in the broad range of the maximum spectrum acceleration peak are determined. If no piping

system frequencies exist in the ±15% interval associated with the maximum spectrum acceleration peak, then the interval associated with the next highest spectrum acceleration peak is selected and used in the following procedure:

Considering all N natural frequencies in the interval

$$f_j - 0.15\, f_j \le (f_e)_n \le f_j + 0.15\, f_j$$

where

f_j = the frequency of maximum acceleration in the un-broadened spectra

n = 1 to N

the system is evaluated by performing N + 3 separate analyses using the un-broadened floor design response spectrum and the un-broadened spectrum modified by shifting the frequencies associated with each of the spectral values by a factor + 0.15; -0.15 and

$$[(f_e)_n - f_j]/f_j$$

where

n = 1 to N

The solutions from these separate analyses are then enveloped to obtain the final solution results (displacement, force, moment, support loads, etc.). If three different floor response spectrum curves are used to define the response in the two mutually perpendicular horizontal and the vertical directions, then the shifting of the spectral values, as defined in the preceding discussion, are applied to the these three spectrum curves.

3.12.3.2.3 Uniform Support Motion

Piping systems supported by structures located at multiple elevations within one or more buildings may be analyzed using USM.

This analysis method applies a single set of spectra at all support locations, which envelopes all of the individual response spectra for these locations. The enveloped response spectrum is developed and applied in the two mutually perpendicular horizontal directions and the vertical direction.

The modal and spatial responses are then combined as discussed in Subsections 3.12.3.2.4, and 3.12.3.2.5, respectively.

Floor response spectrum curves used for USM may be generated using damping values identified in the Table 3 or the frequency-dependent damping values of Figure 1 from RG 1.61, Rev.1 (Reference 3.12-10).

3.12.3.2.4 Modal Combination

Guidance on combining the individual modal results due to each response spectrum in a dynamic analysis is provided in RG 1.92, Rev.1 (Reference 3.12-11).

Low frequency (non-rigid) modes: For piping systems with no closely spaced modes, the SRSS method is applied to obtain the representative maximum response of each element, for each direction of excitation as delineated in Regulatory Position C1.1 of RG 1.92, Rev.1 (Reference 3.12-11). A 10% grouping method is used for combining the responses of closely spaced modes as delineated in Regulatory Position C1.1 of RG 1.92, Rev.1 (Reference 3.12-11).

High frequency (rigid) modes: Piping system modes with frequencies greater than the ZPA cutoff frequency are considered as high frequency or rigid range modes. The response from high frequency modes must be included in the response of the piping system, if it results in an increase in the dynamic response of more than 10%. The guidance for including the missing mass effects is provided in SRP 3.7.2 (Reference 3.12-12), as well as in RG 1.92, Rev.2 (Reference 3.12-13).

The PIPESTRESS computer program is used for analyzing most of the piping systems. This program uses the left-out-force (LOF) method in order to calculate the effect of the high frequency rigid modes. The LOF method is described in the “PIPESTRESS Theory Manual” (Reference 3.12-14) and the “Outline of Dynamic Analysis for Piping Systems” (Reference 3.12-15).

3.12.3.2.5 Directional Combination

The responses due to each of the three spatial input components of motion are combined using the SRSS method as provided in Regulatory Position C2.1 of RG 1.92, Rev.1 (Reference 3.12-11).

3.12.3.2.6 Seismic Anchor Motions

Where supports are located within different structures or at flexible equipment connections, the effects of differential displacements of equipment or structures to which the piping system attaches during a SSE are also considered.

The analysis of these seismic anchor motions (SAMs) is performed as a static analysis with all dynamic supports active. The results of this analysis are combined with the piping system seismic inertia analysis results by absolute summation.

Where supports are located within a single structure, the seismic motions are considered to be in-phase and the relative displacement between the support locations is considered in the analysis. Where supports are located within different structures, the seismic motions at these locations are assumed to move 180 degrees out-of-phase while performing the analysis.

3.12.3.3 Response Spectra Method (or Independent Support Motion Method)

ISM may be used when piping systems are supported by multiple support structures or at multiple levels within a structure.

The supports are divided into support groups. Each support group is made up of supports that have the same time-history input. Each support group is considered to be in a random-phase relationship to the other support groups. The responses caused by each support group are combined by the SRSS method. The modal and directional responses are then combined as discussed in Subsection 3.12.3.2.4 and 3.12.3.2.5, respectively.

Floor response spectrum curves used for ISM are generated using damping values identified in the Table 3 of RG 1.61, Rev.1 (Reference 3.12-10).

3.12.3.4 Time-History Method

Seismic analysis of piping systems is not performed using the time-history method.

The time-history method may be used to evaluate the effects on piping due to hydrodynamic loads caused by water/steam hammer, relief/safety valve discharge thrust, or any other dynamic loading associated with fluid flow transients. The time- history analysis may be performed using modal superposition method or the direct integration method.

3.12.3.5 Inelastic Analyses Methods

Inelastic analyses methods are not used to qualify piping for the US-APWR design.

3.12.3.6 Small-Bore Piping Method

Class 1 piping 1 inch nominal pipe size (NPS) and smaller, and Class 2 and 3 piping 2 inch NPS and smaller are considered as small bore piping.

For small-bore piping, either the equivalent static load method or the modal response spectrum method are used. The modal response spectrum method was described in the preceding paragraphs.

The equivalent static load method is consistent with the guidelines of SRP 3.9.2.II.2 (ii) (Reference 3.12-16). In this simplified analysis, the mass of piping, its contents, and any in-line equipment are considered as lumped masses at respective centers of gravity. Static forces are determined by multiplying the contributing mass by a seismic acceleration (G factor) at each location. Static analysis is performed using the static forces applied at those mass locations. Considering that the piping systems are multiple degree of freedom systems and have a significant number of frequencies in the amplified region of the response spectrum curve, the seismic acceleration used as a G factor equals 1.5 times the peak acceleration of the enveloped floor response spectrum. This static force analysis is performed for all three spatial directions of seismic excitation. The solutions from these static analyses are combined by the SRSS method.

Alternatively, a handbook using the above methods for simplified design of small bore piping may be developed.

3.12.3.7 Non-seismic/Seismic Interaction (II/I)

In the design of the US-APWR, the primary method of protection for seismic category I piping is its isolation from piping that is not required to be designed to seismic category I requirements.

In cases where it is not possible or practical to isolate the seismic category I piping, adjacent non-seismic piping is classified as seismic category II and analyzed and supported such that an SSE event does not cause an unacceptable interaction with the seismic category I piping.

The displacements due to the seismic loading on seismic category II piping are reviewed for interaction with seismic category I piping and components, and interacting supports between seismic category I and seismic category II piping are designed for SSE loadings. If necessary, seismic category II portion of the piping is analyzed to the same design criteria as the seismic category I piping.

For piping systems that includes an interface between seismic category I and non-seismic category I portions, the seismic category I dynamic analysis is up to and includes the first anchor point in the non-seismic system. Anchor points are defined as the extremities of piping runs that connect to structures, components (e.g., vessels, pumps) or pipe anchors that act as rigid constraints relative to piping motion and thermal expansions.

3.12.3.8 Seismic Category I Buried Piping

In the design of US-APWR, there are no seismic category I buried piping systems.

3.12.4 Piping Modeling Technique

3.12.4.1 Computer Codes

The following computer programs are used in the analysis of safety-related piping systems. For pipe stress analyses and pipe support design, if a program is used that is not listed below, then program validations, including piping benchmark problems of NUREG/CR-1677, Volumes 1 and 2 (Reference 3.12-17) are to be performed.

3.12.4.1.1 List of Programs

- PIPESTRESS

  PIPESTRESS (Reference 3.12-18) is a computer program for the analysis of piping systems.

  This program is used for the analysis of ASME Code, Section III, Class 1, 2, 3 (Reference 3.12-2) and ASME B31.1 (Reference 3.12-1) piping systems under various load conditions.

  Static analysis includes deadweight, thermal expansion, internal pressure, applied forces, and moments of displacements.

  Dynamic analysis includes response spectra analysis and time-history analysis.

- Abaqus

  Abaqus (Reference 3.12-19) is a general-purpose computer program for structural analysis.

  This program is used for temperature distribution analysis and thermal stress analysis according to piping geometries and design transients such as fluid temperature, coefficient of heat transfer, and flow rate.

- ANSYS

  ANSYS (Reference 3.12-20) is a general purpose finite element structural analysis computer program.

- RELAP-5

  RELAP-5 (Reference 3.12-21) is a computer program for the fluid transient analysis.

  This program is used for the analysis of a behavior, such as water hammer, by modeling flow volume and flow path.

  The pressure and flow rate time-history can be obtained.

- E/PD STRUDL

  E/PD STRUDL (Reference 3.12-22) is a computer program that has the capability to perform the structural analysis of pipe supports in compliance with ASME Code, Section III, Section NF (Reference 3.12-2), and AISC Codes (Reference 3.12-23).

  This computer program is designed to perform analysis of the pipe support structure, including the base plate flexibility per NRC IE Bulletin 79-02 (Reference 3.12-24) as applicable and perform a code stress check of the various components of the support assembly (e.g., structural stock items, welds, anchor bolts, and support vendor components based on data used from vendor's catalog values per vendor's certified design reports).

3.12.4.1.2 Program Validations

Verification tests are to demonstrate the capability of the computer program to produce valid results for test problems encompassing the range of permitted usage defined by the program documentation. Subsection 3.9.1.2 describes the various methods used for computer program validations.

3.12.4.2 Dynamic Piping Model

For dynamic analysis, the piping system is idealized as a three dimensional space frame. The analysis model consists of a sequence of nodes connected by straight pipe elements and curved pipe elements with stiffness properties representing the piping, and other in-line components.

Piping restraints and supports are idealized as zero length springs with appropriate stiffness values for the restrained degrees of freedom.

In the dynamic mathematical model, the distributed mass of the system, including pipe, contents, and insulation weight, is represented as lumped masses located at each node, which is designated as a mass point.

The minimum number of degrees of freedom in the model is to be equal to twice the number of modes with frequencies below a pre-selected cut-off-frequency.

The following formula is used to determine the spacing between two successive mass points. The PIPESTRESS program uses this formula for mass point spacing.

$$L = \sqrt{\left[\frac{K}{F_R}\right]\sqrt{\frac{EI}{W}}}$$

where

K = 0.743

L = Mass point spacing (ft)

F_R = Cut-off frequency (Hz)

E = Modulus of elasticity of pipe material (psi)

I = Moment of inertia of pipe cross-section (in^4)

W = Mass per unit length of piping + insulation + contents (lbm/ft)

Concentrated weights of in-line components, such as valves, flanges, and instrumentation, are also modeled as lumped masses.

Torsional effects of eccentric masses are included in the analysis.

The mass contributed by the support is included in the analysis when it is greater than 10% of the total mass of the adjacent pipe span (including pipe, contents, insulation, and concentrated masses).

3.12.4.3 Piping Benchmark Program

Piping benchmark problems included in NUREG/CR-1677, Vol. 1 and 2 (Reference 3.12-17) are used to validate the PIPESTRESS computer code used in piping stress analysis. In addition, three piping benchmark problems from NUREG/CR-6414 (Reference 3.12-25) are also used to validate the PIPESTRESS computer code.

3.12.4.4 Decoupling Criteria

Branch lines and instrument connections may be decoupled from the analysis model of a larger run of piping provided that either the ratio of the branch pipe mean diameter to the pipe run mean diameter (D_b/D_r) is less than or equal to 1/3, or the ratio of the moments of inertia of the two lines (I_b/I_r) is less than or equal to 1/25.

In addition to the size limitations, the decoupled branch line must be sufficiently flexible to facilitate the thermal expansion and seismic movements of the pipe run without

constraint. As such, restraints on the branch line should not be located close to the actual pipe run connection.

Seismic analysis of the decoupled branch line is performed using applicable envelope response spectra for the decoupled branch line considering the connection point as an anchor. The envelope response spectra also include amplified response spectra at the connection point to the supporting piping run as a component response spectra. The movements (displacements and rotations) of the pipe run from the thermal, SAM or pipe break analyses is applied as anchor movements with their respective load cases in the decoupled branch line analysis.

If amplified response spectra at the connection point can not be developed, movements of the connection point from the seismic inertia analysis of the pipe run are analyzed as anchor movements and the solution is added to the seismic analysis of the decoupled branch line by absolute summation. The envelope floor response spectrum used for the seismic analysis of the decoupled branch line includes floor response spectra applicable for the connection point or the nearest restraints on the pipe run as a component response spectrum.

The pipe run seismic analysis is performed without the decoupled branch. However, the mass effect is considered when the mass of half the span of the branch pipe is greater than 10% of the mass of the pipe run span.

In the analysis of the pipe run, as well as the decoupled branch pipe, the effects of the applicable stress intensification factors and/or stress indices of the branch connection are incorporated.

3.12.5 Piping Stress Analysis Criteria

3.12.5.1 Seismic Input Envelope vs. Site-Specific Spectra

The development of floor response spectra for the US-APWR design is described in Subsection 3.7.2.5, “Development of Floor Response Spectra”.

If any piping is laid out in the yard, the COL Applicant is to generate site-specific seismic response spectra, which may be used for the design of these piping systems or portions of piping system.

3.12.5.2 Design Transients

ASME Code, Section III, Class 1 (Reference 3.12-2) piping system and support component experience the RCS transients identified in Table 3.9-1. On the other hand, Class 1 piping experiences the specific transient caused by the flow injection or discharge through this piping. These transient are listed in Table 3.12-6.

3.12.5.3 Loadings and Load Combination

3.12.5.3.1 Pressure

The internal design pressure, P, is used in the design and analysis of ASME Code, Section III, Class 1, 2 and 3 piping (Reference 3.12-2). The wall thicknesses are

determined using the formulations of NB/NC/ND-3640 and the design pressure, P. Table 3.12-1 provides the definition of terms associated with Tables 3.12-2, 3.12-3 and 3.12-4. The applicable design and maximum service level pressures are used in load combinations as identified in Tables 3.12-2 and 3.12-3.

3.12.5.3.2 Sustained Loads

The weight of the piping system, its contents, any insulation and in-line equipment, and any other sustained loads identified in the design specification are considered in the piping analysis. The weight of water during hydrostatic testing is considered for piping systems carrying process fluids other than water.

3.12.5.3.3 Thermal Expansion

The effect of linear thermal expansion range during various operating modes is considered along with thermal movements of terminal equipment nozzles, anchors, or restraints (thermal anchor movements) corresponding to the operating modes. The stress free temperature is taken as 70°F. The piping systems operating at a temperature of 150°F and below are not analyzed for the effects of linear thermal expansion. However, if the piping system does not contain at least one 90-degree bend, then thermal expansion analysis is needed. Such straight pipe layout without at least one 90-degree bend is avoided when practical.

Thermal movements less than or equal to 1/16th inch may be excluded from analysis as this represents the power industry practice of allowing 1/16th inch gap or clearance all around the pipe in pipe supports.

3.12.5.3.4 Earthquake Loads

As required by GDC-2, the main earthquake load used in the US-APWR design is defined in Section 3.7.

The effects of inertial loads and anchor movements due to SSE are considered as Service Level D loads in the design of piping and piping supports. Fatigue effects due to earthquake loads are discussed in Subsection 3.12.5.7. Tables 3.12-2, 3.12-3, and 3.12.-4 identify SSE inertial and displacement loads in various load combinations for ASME Code, Section III (Reference 3.12-2), Class 1, 2, and 3 piping, and piping supports.

3.12.5.3.5 Fluid Transient Loads

The relief/safety valve thrust loads, for open or closed systems, are functions of valve opening, flow rate, flow area, and fluid properties. Either a dynamic analysis or a static analysis using a dynamic load factor is performed to analyze such effects. The safety/relief valve thrust loads are considered in Level B, C, or D service load combinations.

The water hammer phenomenon is set in motion by the rapid actuation of valves or the sudden start or trip of a pump or turbine. Fluid hammer is analyzed using dynamic analysis methods. The water hammer loads are considered in Level B, C, or D service load combinations.

3.12.5.3.6 Wind/Tornado Loads

If the COL Applicant finds it necessary to lay ASME Code, Section III (Reference 3.12-2), Class 2 or 3 piping exposed to wind or tornado loads, then such piping must be designed to the plant design basis loads.

3.12.5.3.7 Design Basis Pipe Break Loads

High-energy line breaks cause loads in the form of pipe whip, jet impingement, and changes in environmental conditions. Design basis pipe break (DBPB) loads include the impact of the RCPB piping break, main steam and feedwater line breaks excepting the piping break which meets the LBB criteria (see Subsection 3.6.3) or inside the pipe break exclusion area. DBPB loads are considered in Level D service load combinations.

3.12.5.3.8 Thermal and Pressure Transient Loads

Temperature variations in ASME Code, Section III, Class 1 (Reference 3.12-2) piping are analyzed to consider the effect of the temperature gradient across the pipe wall, and the resulting stress intensities are included in the stress equations and fatigue evaluation.

3.12.5.3.9 Hydrostatic Pressure Tests

Hydrostatic pressure tests are performed on piping systems at pressures specified in the design specification. Piping systems that normally carry operating fluids, such as steam or gas, must have “pins” placed in variable support spring hangers, constant support hangers, and temporary supports added, as needed. The effect of the test pressure and fluid weight are considered in satisfying the appropriate ASME Code, Section III, Class 1, 2, and 3 (Reference 3.12-2) stress equations. The effects of hydrostatic pressure tests on ASME Code, Section III, Class 1 piping fatigue are in accordance with NB-3226.

3.12.5.3.10 Load Combinations

Using the ASME Code, Section III, NB/NC/ND-3650 (Reference 3.12-2) stress equations, piping system stresses is calculated for various load combinations in Tables 3.12-2 and 3.12-3.

3.12.5.4 Damping Values

The damping values used in the seismic analysis of the piping systems is dependent upon the method of seismic analysis used.

The damping value used for the SSE is 4%, which is consistent with Table 3 of the RG 1.61, Rev.1 (Reference 3.12-10).

The frequency-dependent damping values of Figure 1 of the RG 1.61, Rev.1 (Reference 3.12-10), are used only for the USM technique.

3.12.5.5 Combination of Modal Responses

For piping systems with no closely spaced modes, the SRSS method is applied to obtain the representative maximum response of each element, for each direction of excitation as delineated in Regulatory Position C1.1 of RG 1.92, Rev.1 (Reference 3.12-11). A 10% grouping method is used for combining the responses of closely spaced modes as delineated in Regulatory Position C1.2.1 of RG 1.92, Rev.1 (Reference 3.12-11).

3.12.5.6 High-Frequency Modes

The PIPESTRESS computer program is used for analyzing most of the piping systems. This program uses the LOF method to calculate the effect of the high frequency rigid modes (References 3.12-14 and 3.12-15). The results obtained are treated as an additional modal result from a non-closely spaced last mode, and are combined with other modal responses by the methods described in Subsection 3.12.5.5.

Site-specific high frequency exceedances of piping systems that are not sensitive to high frequency exceedances in the 25 Hz to 50 Hz range are acceptable as described in Section 3.7. The COL Applicant is to screen piping systems that are sensitive to high frequency modes for further evaluation.

3.12.5.7 Fatigue Evaluation of ASME Code Class 1 Piping

ASME Code, Section III, Class 1 (Reference 3.12-2) piping is evaluated for the effects of fatigue caused by various thermal and pressure transients and other cyclic events including earthquakes and thermal stratification. The criteria described in ASME Code, Section III, Class 1, Subsection NB-3653 (Reference 3.12-2) are used for all piping greater than 1 inch NPS designated as ASME Code, Section III, Class 1. One inch NPS and smaller Class 1 piping is analyzed by the rules of Subsection NC.

The environmental impact on fatigue of ASME Code, Section III (Reference 3.12-2), Class 1 piping follow the requirements delineated in RG 1.207, Rev.1 (Reference 3.12-26).

3.12.5.8 Fatigue Evaluation of ASME Code Class 2 and 3 Piping

ASME Code, Section III (Reference 3.12-2), Class 2 and 3 piping are not explicitly analyzed for calculation of cumulative usage factors in a manner similar to the ASME Code, Section III, Class 1 piping. ASME Code, Section III, Class 2 and 3 piping are evaluated following the requirements of NC/ND-3611.2 (Reference 3.12-2), which allows the reduction of allowable stress for thermal expansion stress ranges calculated using the requirements of NC/ND-3653.2(a) by stress range reduction factor (*f*) of Table NC/ND-3611.2(e)-1. The stress intensification factors used in the Class 2 and 3 Code Equations 10 and 11 for various piping products and components are based on fatigue testing. As such, they indirectly account for fatigue. The environmental impact on fatigue of Class 2 and 3 piping follows guidelines established by the NRC at the time of actual analysis.

3.12.5.9 Thermal Oscillations in Piping Connected to the Reactor Coolant System

As determined by NRC Bulletin 88-08 including Supplement 3 (Reference 3.12-27), the RCS is reviewed to identify places potentially affected by thermal stresses caused by thermal stratification or thermal oscillation.

Thermal stratification and oscillation has been evaluated relative to the design of the US-APWR. It has been found that no problem would occur due to the thermal stresses caused by thermal stratification or temperature changes in the closed branch piping, connected to RCS (see Tables 3.12-7 and 3.12-8). The following US-APWR design approach to address valve leakage is provided as assurance against thermal stratification and thermal oscillation.

1. A double isolation valve configuration successfully restricts leakage, preventing fatigue failure from thermal stratification or oscillation.

2. For a single valve configuration, leakage can be detected by measuring the downstream temperature. Monitoring of downstream temperature is utilized to detect valve leakage. As a result of leakage detection, valve repair can be scheduled, thereby preventing fatigue failure from thermal stratification or oscillation.

3. In the case of a gate valve configuration, high-cycle fatigue could be caused by repeated leaks from the valve gland. Leaks would occur even when double isolation valves are installed in series. By permitting continuous leakage through the valve gland packing by valve disk position adjustment, valve disk expansion and contraction cycle is prevented and cyclic fatigue failure caused by thermal stratification or thermal oscillation is eliminated (Reference 3.12-27).

3.12.5.10 Thermal Stratification

NRC Bulletin 79-13 (Reference 3.12-28) addresses the effect of thermal stratification that lead to the cracking of the feedwater line at D.C., Cook Nuclear Plant Unit 2.

Provisions of the thermal stratification of the feedwater nozzle are described in Subsection 5.4.2.1.2.12.

NRC Bulletin 88-11 (Reference 3.12-29) was issued after Portland General Electric Company experienced difficulties in setting whip restraint gap sizes on the pressurizer surge line at the Trojan plant.

At the horizontal portion of the pressurizer surge line, thermal stratification is expected to occur if the surge flow velocity is low, and to disappear if the velocity is high. At normal operation, a low flow-rate out-surge flow in the line connecting the pressurizer to the hot leg may occur due to a continuous spray, which could lead to a thermal stratification in the cross section of pressurizer surge line in accordance with the temperature difference between pressurizer and hot leg. When a high-flow rate out-surge flow or in-surge flow occurs during transient events, this thermal stratification disappears. The low flow-rate out-surge flow is recovered as soon as out-surge or in-surge ends, thus, reproducing the thermal stratification.

Structural integrity of the pressurizer surge line of the US-APWR plant is to be assured by performing the following activities for the first US-APWR plant.

1. Fatigue evaluation is to be performed by considering the repeated event of thermal stratification occurring in the pressurizer surge line. It will be confirmed by analysis and hot functional test that thermal deflections of piping do not result in adverse consequences.

   If the fatigue evaluation results yield noncompliance with the Code, items 2 thru 4 below, are to be performed.

2. Operational alternatives such as plant start-up and cooldown, which are the most severe conditions for thermal stratifications of the pressurizer surge line due developing the largest difference of temperature between hot leg and pressurizer, are to be considered for mitigation of thermal stratification in the US-APWR.

3. The surge line is to be monitoring for the effect of thermal stratification during hot functional testing.

4. Monitoring results are to be included in stress and fatigue analysis to ensure Code compliance.

3.12.5.11 Safety Relief Valve Design, Installation, and Testing

The requirements of “Rules for the Design of Safety Valve Installations”, ASME Code, Appendix O (Reference 3.12-30) are followed in the design and installation of safety valves and relief valves for overpressure protection.

Discharge forces of safety or relief valves using open vent stacks to discharge directly to the atmosphere are normally calculated using static methods and a conservative dynamic load factor. While performing stress analysis, these discharge forces are applied to evaluate stresses and restraint/support design loads using static equivalent force analysis methods.

Discharge forces of safety or relief valves using piped discharges to vessels or headers are not considered as steady state forces, but are analyzed as forces acting at changes in directions (elbows and branch connections) during the initial discharge phase. A static equivalent force analysis or a time-history dynamic force analysis are performed on the piping system to evaluate resulting stresses and support/restraint design loads.

If several relief or safety valves are placed on a common header, the most adverse sequence of valve discharges are used to calculate piping stresses and support/restraint design loads.

3.12.5.12 Functional Capability

The functional capability requirements for ASME piping systems that must maintain an adequate fluid flow path to mitigate a Level C or D service conditions are shown in Table 3.12-5. These requirements are based on NUREG-1367 (Reference 3.12-31).

3.12.5.13 Combination of Inertial and Seismic Anchor Motion Effects

The inertial effects and anchor movement effects due to an earthquake are analyzed separately. The results from these two separate analyses are combined by the absolute summation method for support design loads and for the fatigue analysis of ASME Code, Section III, Class 1 (Reference 3.12-2) piping systems.

3.12.5.14 Operating-Basis Earthquake as a Design Load

For US-APWR piping design, the main earthquake load used is defined in Section 3.7.

By virtue of the design criteria used for piping components and supports, this design basis criterion assures that SSE controls the seismic design of systems and components.

3.12.5.15 Welded Attachments

Where integral welded attachments to piping are used in restraint design, standard industry practices and ASME Code Cases identified in Subsection 3.12.2.2 are used.

3.12.5.16 Modal Damping for Composite Structures

Modal damping for composite structures is described in Subsection 3.7.3.3.

3.12.5.17 Minimum Temperature for Thermal Analyses

The stress-free state of a piping system is defined as the state of the piping at a temperature of 70°F.

Piping systems subjected to operating temperatures greater than 150° F are analyzed for the effects due to thermal expansion.

3.12.5.18 Intersystem Loss-of-Coolant Accident

Piping systems designed to operate under low pressure conditions may come to interface with the RCPB. For such piping systems, the minimum wall thickness is calculated per the requirements of NB-3640 (Reference 3.12-2), and stress analysis is performed in accordance with NB/NC/ND-3650 (Reference 3.12-2) equations using the appropriate RCPB pressure.

3.12.5.19 Effects of Environment on Fatigue Design

As discussed in Subsection 3.12.5.7, the environmental impact on fatigue on ASME Code, Section III, Class 1 (Reference 3.12-2) piping follow the requirements delineated in RG 1.207 (Reference 3.12-26).

3.12.6 Piping Support Design Criteria

3.12.6.1 Applicable Codes

Seismic category I pipe supports are designed in accordance with subsection NF of the ASME Code, Section III, 2001 Edition (Reference 3.12-32) for Level A, B, and C service conditions. For Level D service condition, Nonmandatory Appendix F of Section III of the ASME Code, 2001 Edition (Reference 3.12-33) is utilized.

ASME Code, Section III, Subsection NF (Reference 3.12-32) details varying requirements of ASME Code, Section III, Class 1, 2, and 3 support structures, that is further classified into plate and shell type supports, linear type supports, and standard piping products. The welding requirements for A500, grade tube steel from AWS D1.1 (Reference 3.12-34) are utilized.

The construction of ASME Code, Section III, Class 1 (Reference 3.12-32) linear-type piping supports (excluding snubbers) follow the rules of ASME Code, Section III, Subsection NF as supplemented by the stipulations of Section C., Regulatory Position of RG 1.124, Rev.2 (Reference 3.12-35).

The construction of ASME Code, Section III, Class 1 plate-and-shell-type piping supports (excluding snubbers) follow the rules of ASME Code, Section III, Subsection NF (Reference 3.12-32) as supplemented by the stipulations of Section C., Regulatory Position of RG 1.130, Rev.2 (Reference 3.12-36).

Seismic category II piping supports are also designed per the requirements of ASME Code, Section III, Subsection NF (Reference 3.12-32).

Non-seismic category piping supports are designed using the guidelines in the “Manual of Steel Construction, 9th Edition”, AISC (Reference 3.12-23). However, material properties from later editions may be used as necessary.

Expansion anchors and other steel embedments in concrete are designed for concrete strength in accordance with “Code Requirements for Nuclear Safety Related Concrete Structures”, ACI 349 (Reference 3.12-37).

Pipe support catalog items, which are fabricated/manufactured to later code editions than identified in the above paragraphs, may be used on a site-specific basis. This use of the later codes shall be reconciled to the code of record identified in the above paragraphs.

3.12.6.2 Jurisdictional Boundaries

3.12.6.2.1 Pipe Supports and Attachment Points

The jurisdictional boundary between a pipe and its support structure follows the guidance of ASME Code, Section III, Subsections NB-1132, NC-1132, or ND-1132 (Reference 3.12-2).

For piping analyzed per the requirements of ASME B31.1 (Reference 3.12-1), the jurisdictional boundary guidance of ASME Code, Section III, Subsection ND-3611 is followed.

3.12.6.2.2 Subsection NF Boundaries

The jurisdictional boundary between the pipe support and the building structure follow the guidance of Subsection NF-1130 of the ASME Code, Section III (Reference 3.12-32)

3.12.6.3 Loads and Load Combinations

The load combinations for the piping support design are defined based on the four Level A, B, C, and D service conditions. The load combinations used for all four levels always includes the effects of thermal expansion and sustained loads for all conditions. The combination of loads imposed by thermal expansion and other loading such as weight may be less than the individual loading imposed by weight alone, as the summation is algebraic. In such a case, the cold condition as an installed condition where weight alone is the load acting on the system is also considered for support loads.

The following subsections provide a description of the various loads considered in the design load combinations. Table 3.12-4 provides the load combinations used in the design of the pipe supports.

3.12.6.3.1 Dead Weight Loads

The loads are based on the dead weight loading case of the associated piping stress analysis and generally include the weight of the piping system and its contents, and any pipe support components attached directly to the pipe (e.g., clamps or integral attachments). In addition, the dead weight of the support components is considered. In Table 3.12-4, dead weight loads are designated by DL.

3.12.6.3.2 Thermal Expansion Loads

Piping analysis may include several thermal expansion loading cases associated with the four service levels. Support loads from these loading conditions are designated as TH_{MTL}, corresponding to the appropriate Level A, B, C, and D service conditions.

3.12.6.3.3 Friction Loads

Friction loads are the result of movement of the pipe across the surface of a support member. Such loads are manually calculated. In Table 3.12-4, friction loads are designated by *F*.

3.12.6.3.4 Wind Loads

Piping exposed to the environment (e.g., yard piping) may be subjected to wind loads. Such piping is analyzed for design basis wind loads. In Table 3.12-4, support loads due to wind are designated by W. All safety-related piping systems are located inside wind protected structures; therefore are not subject to wind and tornado loading.

3.12.6.3.5 Tornado Loads

Piping exposed to the environment (e.g., yard piping) may be subjected to tornado loads. Such piping is analyzed for bounding effects at building penetrations exposed to design basis tornado loads. In Table 3.12-4, support tornado loads due to tornado are

designated by W_T. All safety-related piping systems are located inside tornado protected structures; therefore are not subject to tornado and wind loading.

3.12.6.3.6 System Operating Transient Loads

Dynamic loads such as safety/relief valve discharge and water/steam hammer loads are analyzed for piping systems. Support loads from such dynamic analyses are designated as L_{DF} in Table 3.12-4.

3.12.6.3.7 Safe-shutdown Earthquake Loads

Piping is analyzed for both inertial loads and loads due to seismic anchor movements. Piping loads resulting from these loads are designated as safe-shutdown earthquake inertia loads (SSEI) and safe-shutdown earthquake anchor loads (SSEA) in Table 3.12-4.

3.12.6.3.8 Other Loads

Piping systems are analyzed for other loading conditions such as small pipe break, main steam/feedwater pipe break, and LOCA loads. Pipe support loads from such conditions are designated as DBPB.

3.12.6.3.9 Minimum Design Loads

In order to obtain uniformity in the load carrying capability of the supports, minimum design loads for all supports are defined as the largest of the following three loads:

- 100% of the Level A service level load
- The weight of a standard ASME B31.1 span of water filled schedule 80 pipe
- A minimum value of 150 pounds

3.12.6.4 Pipe Support Baseplate and Anchor Bolt Design

While every effort is made to minimize the use of baseplates with expansion anchors, there may be some instances of utilization of baseplate designs. In such cases, an evaluation of concrete is performed using the requirements of ACI-349, Appendix B (Reference 3.12-37) considering the limitations of RG 1.199 (Reference 3.12-38). All aspects of the anchor bolt design, baseplate flexibility and factors of safety are utilized as identified in IE Bulletin 79-02, Rev.2 (Reference 3.12-24).

3.12.6.5 Use of Energy Absorber and Limit Stops

Energy absorbers and limit stops are not used as piping supports in the US-APWR design.

3.12.6.6 Use of Snubbers

Snubber supports are utilized where free thermal movements are required and restraining movements caused by dynamic loadings is also required. However, care is taken to locate snubbers where the pipe has the required dynamic

accelerations/displacements to properly activate the snubber. In general, snubber components are manufactured hardware. Snubbers are either hydraulic or mechanical in operation.

The criteria for locating snubbers and ensuring adequate capacity, the structural and mechanical performance parameters used for snubbers, and the installation and inspection considerations for snubbers is described in detail in Subsection 3.9.3.4.

The use of snubbers is minimized as-much-as-possible due to the maintenance and testing requirements for these components. The accessibility of any snubber utilized is a consideration in the design of the supporting scheme for the piping system. Snubbers are not used where movements due to thermal expansion are in small magnitude.

The main consideration in the design of any snubber is the ability of the snubber to properly activate and restrain movement for a given design load. Care is taken so that the thermal growth does not exceed the snubber lock-up velocity. When parallel snubbers are utilized in the same support restraining direction, care is taken to assure that: (a) fitting clearances are not mismatched between the snubbers to avoid activation of one snubber before the activation of the other(s), and (b) there is no significant difference in stiffness properties among the subject snubbers.

The specification provided to the supplier (manufacturer) contains the following information:

- Applicable codes (e.g., ASME Code, Section III, Subsection NF [Reference 3.12-32]) and standards
- Functional requirements
- Operating environment (normal as well as post-accident)
- Materials to be used in manufacturing/fabrication
- Functional testing and certification

The proper installation and operation of snubbers by the use of visual inspection, operational and installation measurements, and observation of thermal movements during plant startup are to be verified.

3.12.6.7 Pipe Support Stiffness

In the de-coupled piping stress analysis (where support is modeled as a restraint versus the integrated analysis), supports are modeled with either calculated actual stiffness of the support structure, or with an arbitrarily chosen rigid stiffness. In general, rigid support stiffness is used for all ASME Code, Section III, Classes 2 and 3 (Reference 3.12-2), and ASME B31.1 (Reference 3.12-1) piping, with a check on support deflection in the restrained directions to verify the assumed rigidity. The actual stiffness is used for all variable support hangers (springs). For all ASME Code, Section III, Class 1 piping, during the final design fatigue analyses the actual support stiffness is used. If the actual support stiffness is used for any support excluding variable support hangers, the actual stiffness for all supports within the piping analytical problem boundary model is used. Caution is used in the support design to keep the unrestrained direction of the support

from having a frequency that would tend to provide significant amplification of the support structure mass.

Two deflection checks are performed for each support modeled as rigid in the piping analysis. The first check compares the deflection in the restrained direction(s) to a maximum of 1/16th inch for SSE loadings or the minimum support design loadings of Subsection 3.12.6.3. The second check compares the deflection in the restrained direction(s) to a maximum of 1/8th inch for the total deflection (static plus dynamic) for any load case combination. In the development of the support deflections, dynamically flexible building elements beyond the support jurisdictional boundaries are also considered.

3.12.6.8 Seismic Self-Weight Excitation

In the de-coupled piping stress analysis where a support is modeled as a restraint (as against integrated analysis), the response of the support structure to SSE loadings is included in the pipe support analysis. In general, the inertial response of the support structure mass is evaluated. The damping values of RG 1.61, Rev.1 (Reference 3.12-10) is used in such analysis. The support self weight response to SSE is combined with the piping response to SSE (inertial loads and anchor movements) by absolute summation.

3.12.6.9 Design of Supplementary Steel

Seismic category I and seismic category II piping supports are designed per the rules of ASME Code, Section III, Subsection NF. Any supplemental steel required to connect the piping support structure to the building structure is also designed to the rules of Subsection NF, following the guidance on jurisdictional boundaries.

In the case of non-seismic supports, the rules of “Manual of Steel Construction, 9th Edition”, AISC (Reference 3.12-23) are followed for supplemental steel.

3.12.6.10 Consideration of Friction Forces

Friction forces are developed in a pipe support due to the gradual movement of the pipe across the surface of the support member in the unconstrained directions. As such, friction forces are calculated using the loads due to thermal expansion and deadweight that are normal to the applicable support member.

The friction force is calculated only when the movement in the unrestrained direction due to thermal expansion exceeds 1/16th of an inch. The friction force is calculated using the following formula:

Friction Force (F) = μN

where

μ = coefficient of friction
(0.3 for steel-to-steel)
(0.1 for slide/bearing plates)

N = Total force normal to the pipe movement

The friction force *F* cannot be greater than the product of the pipe movement and the stiffness of the pipe support in the direction of movement.

3.12.6.11 Pipe Support Gaps and Clearances

All rigid supports have a cold condition gap of 1/16th inch all around the pipe surface in the restrained direction. These small gaps allow the rotation of the pipe and also allow for radial thermal expansion of the pipe.

In the unrestrained direction, the gaps are greater than the expected maximum movement of the pipe.

Stiff pipe clamps, which are preloaded to prevent themselves from lifting off the piping under dynamic loading conditions, are not used for ASME Code, Section III, Class 1 (Reference 3.12-2) piping.

3.12.6.12 Instrumentation Line Support Criteria

The acceptance criteria for instrumentation line supports are from ASME Code, Section III, Subsection NF for seismic category I (Reference 3.12-32) and seismic category II instrumentation lines. Non-seismic instrumentation lines are designed per the rules of "Manual of Steel Construction, 9th Edition", AISC (Reference 3.12-23).

The applicable loading combinations for these supports are those used for normal and faulted conditions in Table 3.12-4.

3.12.6.13 Pipe Deflection Limit

Manufacturer's recommendations for the limitations in its hardware are followed for those piping supports that utilize standard manufactured components. Such limitations include travel limits for variable and constant support spring hangers, swing angles for rod hangers, struts, and snubbers. The variability check of variable support spring hangers is performed per applicable Codes.

3.12.7 Combined License Information

COL 3.12(1) *Deleted*

COL 3.12(2) *If any piping is laid out in the yard, the COL Applicant is to generate site-specific seismic response spectra, which may be used for the design of these piping systems or portions of piping system.*

COL 3.12(3) *If the COL Applicant finds it necessary to lay ASME Code, Section III (Reference 3.12-2), Class 2 or 3 piping exposed to wind or tornado loads, then such piping must be designed to the plant design basis loads.*

COL 3.12(4) *The COL Applicant is to screen piping systems that are sensitive to high frequency modes for further evaluation.*

3.12.8 References

3.12-1 Code for Pressure Piping, Power Piping. ASME B31.1, 2004 Edition, American Society of Mechanical Engineers.

3.12-2 ASME Boiler and Pressure Vessel Code, Section III, Division 1, Subsections NB, NC and ND, 1992 Edition including 1992 Addenda, The American Society Of Mechanical Engineers.

3.12-3 General Design Criteria for Nuclear Power Plants, Domestic Licensing of Production and Utilization Facilities, Energy. Title 10, Code of Federal Regulations, Part 50, Appendix A, U.S. Nuclear Regulatory Commission, Washington, DC.

3.12-4 Earthquake Engineering Criteria for Nuclear Power Plants, Domestic Licensing of Production and Utilization Facilities, Energy. Title 10, Code of Federal Regulations, Part 50, Appendix S, U.S. Nuclear Regulatory Commission, Washington, DC.

3.12-5 Code Cases: Nuclear Components, Boiler and Pressure Vessel Code. 1992 Edition, American Society of Mechanical Engineers.

3.12-6 Design, Fabrication, and Materials Code Case Acceptability, ASME Section III. Regulatory Guide 1.84, Rev.34, U.S. Nuclear Regulatory Commission, Washington, DC, August 2005.

3.12-7 ASME Code Cases Not Approved For Use, Regulatory Guide 1.193, Rev.1, U.S. Nuclear Regulatory Commission, Washington, DC, August 2005.

3.12-8 Seismic Subsystem Analysis, Design of Structures, Components, Equipment, and Systems, Standard Review Plan for the Review of Safety Analysis Reports for Nuclear Power Plants. NUREG-0800, Standard Review Plan 3.7.3, Rev.3, U.S. Nuclear Regulatory Commission, Washington, DC, March 2007.

3.12-9 Development of Floor Design Response Spectra for Seismic Design of Floor-Supported Equipment or Components. Regulatory Guide 1.122, Rev.1, U.S. Nuclear Regulatory Commission, Washington, DC, February 1978.

3.12-10 Damping Values for Seismic Design of Nuclear Power Plants. Regulatory Guide 1.61, Rev.1, U.S. Nuclear Regulatory Commission, Washington, DC, March 2007.

3.12-11 Combining Modal Responses and Spatial Components in Seismic Response Analysis. Regulatory Guide 1.92, Rev.1, U.S. Nuclear Regulatory Commission, Washington, DC, February 1976.

3.12-12 Seismic System Analysis, Design of Structures, Components, Equipment, and Systems, Standard Review Plan for the Review of Safety Analysis Reports for Nuclear Power Plants. NUREG-0800, Standard Review Plan

3.7.2, Rev.3, U.S. Nuclear Regulatory Commission, Washington, DC, March 2007.

3.12-13 Combining Modal Responses and Spatial Components in Seismic Response Analysis. Regulatory Guide 1.92, Rev.2, U.S. Nuclear Regulatory Commission, Washington, DC, July 2006.

3.12-14 PIPESTRESS Theory Manual, DST Computer Services. S.A., Geneva, Switzerland.

3.12-15 Gordis, K. Outline of Dynamic Analysis for Piping Systems. Nuclear Engineering and Design, Volume 52, No. 1, March 1979.

3.12-16 Dynamic Testing and Analysis of Systems, Structures, and Components, Design of Structures, Components, Equipment, and Systems, Standard Review Plan for the Review of Safety Analysis Reports for Nuclear Power Plants. NUREG-0800, Standard Review Plan 3.9.2, Rev.3, U.S. Nuclear Regulatory Commission, March 2007.

3.12-17 Piping Benchmark Problems. Vol. 1, NUREG/CR-1677, August 1980, Piping Benchmark Problems. Vol. 2, NUREG/CR-1677, August 1985, U.S. Nuclear Regulatory Commission, Washington, DC.

3.12-18 PIPESTRESS, Piping Stress Analysis Program, Version 3.6.0.

3.12-19 Abaqus, Finite Element Structural Analysis Program, Version 6.7, SIMULIA, Providence, RI.

3.12-20 ANSYS, Advanced Analysis Techniques Guide, Release 11.0, ANSYS, Inc., 2007

3.12-21 RELAP-5, Transient Hydraulic Analysis Program, MOD 3.2, Idaho National Engineering and Environmental Laboratory, Idaho Falls, ID.

3.12-22 E/PD STRUDL, Release 1197, PHI-DELTA Inc., 42 Holbrook Avenue, Braintree. MA 02184, January 23, 1998.

3.12-23 Manual of Steel Construction. American Institute of Steel Construction, 9th Edition, 1989.

3.12-24 Pipe Support Base Plate Designs Using Concrete Expansion Bolts. IE Bulletin No. 79-02, Rev.1, U.S. Nuclear Regulatory Commission, 1979.

3.12-25 Piping Benchmark Problems for the Westinghouse AP600 Standardized Plant. NUREG/CR-6414, August 1996, U.S. Nuclear Regulatory Commission, Washington, DC.

3.12-26 Guidelines for Evaluating Fatigue Analyses incorporating the Life Reduction of Metal Components Due to the Effects of the Light Water Reactor Environment for New Reactors. Regulatory Guide 1.207, Rev.1, U.S. Nuclear Regulatory Commission, Washington, DC, March 2007.

3.12-27 Thermal Stresses In Piping Connected To Reactor Coolant Systems. NRC Bulletin No. 88-08 including Supplement 3, U.S. Nuclear Regulatory Commission, Washington, DC, 1988.

3.12-28 Cracking In Feedwater Piping. NRC IE Bulletin No. 79-13, Rev.2, U.S. Nuclear Regulatory Commission, Washington, DC, 1979.

3.12-29 Pressurizer Surge Line Thermal Stratification. NRC Bulletin No. 88-11, U.S. Nuclear Regulatory Commission, Washington, DC, 1988.

3.12-30 ASME Boiler and Pressure Vessel Code, Section III, Division 1 – Appendices, Nonmandatory Appendix O, 1992 Edition.

3.12-31 Functional Capability of Piping Systems. NUREG-1367, U.S. Nuclear Regulatory Commission, Washington, DC, November 1992.

3.12-32 ASME Boiler and Pressure Vessel Code, Section III, Division 1, Subsection NF, 2001 Edition, The American Society Of Mechanical Engineers.

3.12-33 ASME Boiler and Pressure Vessel Code, Section III, Division 1 – Appendices, Nonmandatory Appendix F, 2001 Edition.

3.12-34 Structural Welding Code – Steel. AWS D1.1/D1.1M, 2006, American Welding Society.

3.12-35 Service Limits and Loading Combinations for Class 1 Linear-Type Supports. Regulatory Guide 1.124, Rev.2, U.S. Nuclear Regulatory Commission, Washington, DC, February 2007.

3.12-36 Service Limits and Loading Combinations for Class 1 Plate-and-Shell-Type Component Supports. Regulatory Guide 1.130, Rev.2, U.S. Nuclear Regulatory Commission, Washington, DC, March 2007.

3.12-37 Code Requirements for Nuclear Safety Related Concrete Structures." ACI-349, American Concrete Institute, 2001.

3.12-38 Anchoring Components and Structural Supports in Concrete. Regulatory Guide 1.199, U.S. Nuclear Regulatory Commission, Washington, DC, November 2003.

3.12-39 IEEE Recommended Practice for Seismic Qualification of Class 1E Equipment for Nuclear Power Generating Stations, IEEE Std 344-2004, Appendix D, Institute of Electrical and Electronic Engineers Power Engineering Society, New York, New York, June 2005.

Table 3.12-1 ASME Code, Section III, Class 1, 2, 3, CS and Support Load Symbols and Definitions

Load Symbol	Load Definition
DL	Dead Load (The dead weight consists of the weight of the piping, insulation, and other loads permanently imposed upon the piping)
P	Design Pressure
P_R	Range of Service Pressure
P_M	Maximum Service Pressure
F	Friction Loads
TH_{MTL}	ASME Service Level A (Normal) and Service Level B (Upset) Miscellaneous Thermal Loads with Thermal Stratification and Thermal Cycling Effects
TH_{DISCON}	Thermal Discontinuity Loads
TH_{GRAD}	Thermal Radial Gradient Loads
L_{DM}	Design Mechanical Loads
L_{DMS}	Design Mechanical Loads (sustained)
SSEI	Safe-Shutdown Earthquake Inertia Loads
SSEA	Safe-Shutdown Earthquake Anchor Loads
SE	SE is Support self weight excitation, the effect of the acceleration of the support mass caused by building inertial loads such as *SSEI*
L_{DFN}	ASME Service Level A (Normal) Dynamic Fluid Loads associated with hydraulic transients such as relief/safety valve open or water/steam hammer
L_{DFU}	ASME Service Level B (Upset) Dynamic Fluid Loads associated with hydraulic transients such as relief/safety valve open or water/steam hammer
L_{DFE}	ASME Service Level C (Emergency) Dynamic Fluid Loads associated with hydraulic transients such as relief/safety valve open or water/steam hammer
L_{DFF}	ASME Service Level D (Faulted) Dynamic Fluid Loads associated with hydraulic transients such as relief/safety valve open or water/steam hammer
DBPB	Design Basis Pipe Breaks, include LOCA and non-LOCA
LOCA	Loss-of-Coolant Accident
SCV_E	Static displacement of pre-stressed concrete containment vessel - emergency condition
SCV_F	Static displacement of pre-stressed concrete containment vessel - faulted condition
W	Design Basis Wind Load
W_T	Tornado Wind Load

Table 3.12-2 Loading Combinations for ASME Code, Section III, Class 1 Piping (Sheet 1 of 2)

Condition	Service Level	Category	Loading	Equation (NB-3650)(4)	Stress Limit(4)
Design	-	Primary Stress	P, DL, L_{DM} (including L_{DFN})	Eq. 9 NB-3652	1.5 S_m
Normal /Upset	A/B	Primary + Secondary Stress Intensity Range (SIR)	(3) P_R, TH_{MTL}, TH_{DISCON}, L_{DFN}, L_{DFU}, $SSEI$, $SSEA$	Eq. 10 NB-3653.1	3 S_m
		Peak SIR	P_R, TH_{MTL}, TH_{DISCON}, TH_{GRAD}, L_{DFN}, L_{DFU}, $SSEI$, $SSEA$	Eq. 11 NB-3653.2	
		Thermal Bending SIR	(2) TH_{MTL}	Eq. 12 NB-3653.6(a)	3 S_m
		Primary + Secondary Membrane + Bending SIR	(2) P_R, TH_{DISCON}, L_{DFN}, L_{DFU}, $SSEI$, $SSEA$	Eq. 13 NB-3653.6(b)	3 S_m
		Alternating Stress Intensity (Fatigue)	P_R, TH_{MTL}, TH_{DISCON}, TH_{GRAD}, L_{DFN}, L_{DFU}, $SSEI$, $SSEA$	NB-3653.3 NB-3653.4 NB-3653.5 NB-3653.6(c)	
		Thermal Stress Ratchet	TH_{GRAD} (linear)	NB3653.7	
Upset	B	Permissible Pressure	P_M	NB-3654.1	1.1 Pa
		Primary Stress	P_M, DL, L_{DFU}	NB-3654.2	Min(1.8 S_m,1.5 S_y)
Emergency	C	Permissible Pressure	P_M	NB-3655.1	1.5 Pa
		Primary Stress	P_M, DL, L_{DFE}	NB-3655.2	Min(2.25 S_m,1.8 S_y)
Faulted	D	Permissible Pressure	P_M	NB-3656(b)	2 Pa
		Primary Stress	P_M, DL, L_{DFF}(1), $SSEI$, $DBPB$(1)	NB-3656(a) NB-3656(b)	Appendix-F or Min(3 S_m,2 S_y)
Faulted	D	Secondary Stress	$SSEA$	(5)	6 S_m(5)

Notes:
1. Dynamic loads are to be combined considering timing and causal relationships. SSE and DBPB is combined using the SRSS.
2. The Thermal and Primary plus Secondary Membrane plus Bending Stress Intensity Ranges (Equations 12 and 13) need only be calculated for those load sets that do not meet the Primary plus Secondary Stress Intensity Range (Equation 10) allowable.
3. The earthquake inertial and anchor movement loads used in the Level B Stress Intensity Range and Alternating Stress calculations (Equations 10, 11, 13 and 14) is taken as 1/3 of the peak SSE inertial and anchor movement loads or as the peak SSE inertial and anchor movement loads. If the earthquake loads are taken as 1/3 of the peak SSE loads then the number of cycles to be considered for earthquake loading is to be 300 as derived in accordance with Appendix D of Institute of Electrical and Electronic Engineers Standard 344-2004 (Reference 3.12-39) If the earthquake loads are taken as the peak SSE loads then 20 cycles of earthquake loading is considered. Also, see Note 2.
4. ASME Boiler and Pressure Vessel Code, Section III.

Table 3.12-2 Loading Combinations for ASME Code, Section III, Class 1 Piping (Sheet 2 of 2)

5. $\frac{C_2 D_o M_{AM}}{2I} \leq 6.0 S_m$ and $\frac{F_{AM}}{A_M} \leq S_m$

where
D_o = Pipe Outer Diameter
I = Pipe Moment of Inertia
A_M = Area of cross-section of the pipe
M_{AM} = Range of resultant moment due to *SSEA*
F_{AM} = Amplitude of longitudinal force due to *SSEA*
S_m = Allowable design stress intensity value

The use of $6S_m$ limit assumes elastic behavior of the entire piping system. In the case of unbalanced systems, the design is modified to eliminate unbalance or the piping is qualified by using an allowable limit of $3S_m$.

Table 3.12-3 Loading Combinations for ASME Code, Section III, Class 2 and 3 Piping

Condition	Service Level	Loading	Equation (NC/ND-3650)	Stress Limit(3)
Design	-	P, DL, L_{DMS}	Eq. 8 NC/ND-3652	1.5 S_h
Normal /Upset	A/B	P_M, DL, L_{DMS}, L_{DFN}, L_{DFU}, W	Eq. 9 NC/ND-3653.1	Min(1.8 S_h, 1.5 S_y)
		TH_{MTL}	Eq. 10 NC/ND-3653.2(a)	(1) S_A
		Building Settlement	Eq. 10a NC/ND-3653.2(b)	$3S_c$
		P_M, DL, L_{DMS}, TH_{MTL}	Eq. 11 NC/ND-3652.2(c)	(1) $S_h + S_A$
Emergency	C	P_M, DL, L_{DMS}, L_{DFE}, W_T	Eq. 9 NC/ND-3654	Min(2.25 S_h,1.8 S_y)
Faulted	D	P_M, DL, L_{DMS}, L_{DFF}, $SSEI$, $DBPB$	Eq. 9 NC/ND-3655	Min(3 S_h, 2 S_y)
		$SSEA$	(5)	(5) $6S_h$

Notes:
1. Stresses must meet the requirements of either Equation 10 or 11, not both.
2. If, during operation, the system normally carries a medium other than water (air, gas, steam), sustained loads should be checked for weight loads during hydrostatic testing as well as normal operation weight loads.
3. ASME Boiler and Pressure Vessel Code, Section III
4. Dynamic loads are combined by the SRSS.
5. $\frac{C_2 D_o M_{AM}}{2I} \leq 6.0 S_h$ and $\frac{F_{AM}}{A_M} \leq S_h$

   where
   D_o = Pipe Outer Diameter
   I = Pipe Moment of Inertia
   A_M = Area of cross-section of the pipe
   M_{AM} = Range of resultant moment due to *SSEA*
   F_{AM} = Amplitude of longitudinal force due to *SSEA*
   S_h = Allowable stress value

   The use of $6S_h$ limit assumes elastic behavior of the entire piping system. In the case of unbalanced systems, the design is modified to eliminate unbalance or the piping is qualified by using an allowable limit of $3S_h$.

Table 3.12-4 Loading Combinations for Piping Supports

Condition	Design Loading Combinations
Level A Service	$DL + L_{DMS} + L_{DFN} + TH_{MTL} + F$
Level B Service	$DL + L_{DMS} + L_{DFU} + TH_{MTL} + W$
Level C Service	$DL + L_{DMS} + L_{DFE} + TH_{MTL} + W_T$
Level D Service	$DL + L_{DMS} + L_{DFF} + TH_{MTL}$ $DL + L_{DMS} + L_{DFF} + TH_{MTL} + DBPB$ $DL + L_{DMS} + L_{DFF} + TH_{MTL} + SRSS(DBPB + (SSEI + SSEA + SE))$ (1), (2), (3)

Notes:

1. SRSS
2. Dynamic loads are combined by the *SRSS.*
3. Combine *SSEI, SSEA*, and *SE* by absolute sum method. *SE* is support self weight excitation, the effect of the acceleration of the support mass caused by building inertial loads such as *SSEI.*
4. If, during operation, the system normally carries a medium other than water (air, gas, steam), sustained loads should be checked for weight loads during hydrostatic testing as well as normal operation weight loads.

Table 3.12-5 Piping Functional Capability – ASME Code, Section III, Class 1, 2, and 3(1)

Wall Thickness:	$D_o/t \leq 50$, where D_o, t are per ASME III
Service Level D Conditions	Equation 9 ≤ smaller of 2.0 S_y and 3.0 S_m(2, 4, 5) Equation 9 ≤ smaller of 2.0 S_y and 3.0 S_h(3, 4, 6)
External Pressure:	$P_{external} \leq P_{internal}$

Notes:

1. Applicable to Level C or Level D service conditions for which the piping system must maintain an adequate fluid flow path
2. Applicable to ASME Code, Section III, Class 1 piping.
3. Applicable to ASME Code, Section III, Class 2 and 3 piping.
4. Applicable to ASME Code, Section III, Class 1, 2 and 3 piping when the following limitations are met:
   4.1 Dynamic loads are reversing (slug-flow water hammer loads are non-reversing)
   4.2 Slug-flow water-hammer loads are combined with other design basis loads (for example: SSE; pipe break loads)
   4.3 Steady-state bending stress from deadweight loads does not exceed:
   $$\frac{B_2 M}{Z} \leq 0.25\, S_y$$
   4.4 When elastic response spectrum analysis is used, dynamic moments are calculated using 15% peak broadening and not more than 5% damping
5. For ASME Code, Section III, Class 1 piping, when slug-flow water hammer loads are only combined with pressure, weight and other sustained mechanical loads, the Equation 9 stress does not exceed the smaller of 1.8 S_y and 2.25 S_m.
6. For ASME Code, Section III, Class 2 and 3 piping, when slug-flow water hammer loads are only combined with pressure, weight and other sustained mechanical loads, the Equation 9 stress does not exceed the smaller of 1.8 S_y and 2.25 S_h.

Table 3.12-6 Design Transients of Reactor Coolant Piping Branch Connections

Event	Cycles
Charging nozzle and piping	-
Letdown shut off and re-initiated	70
Charging shut off and re-initiated	-
Maintenance of Regenerative Heat Exchanger	30
Safety injection	70
Charging flow 50% step decrease and return	20,400
Charging flow 50% step increase and return	23,600
Letdown flow 50% step decrease and return	2,900
Letdown flow 100% step increase and return	19,800
Accumulator injection nozzle, Containment Spray/Residual Heat Removal System return nozzle and associated piping	-
Inadvertent operation of accumulator	5
Plant cooldown	120
Refueling	60
Inadvertent RCS depressurization	30
Direct vessel safety injection nozzle and piping	-
Reactor trip from full power with cooldown and safety injection	10
Inadvertent RCS depressurization	30
Inadvertent safeguard actuation	30
Plant safe shutdown	1
Inlet piping of pressurizer safety valve	-
Pressurization safety valve actuation	60
Inlet piping of safety depressurization valve	-
Safety depressurization valve actuation	60
Inlet piping of depressurization valve	-
Depressurization valve actuation	60

Table 3.12-7 Evaluation from Viewpoint of Valve Seat Leakage

	Part	Remarks
Reactor Vessel	Reactor Vessel Head Vent Line	Leak is prevented by double motor operated valves (MOVs) in series.
	Direct Vessel Safety Injection Line	Leak is prevented by double check valves in series.
Hot Leg	Hot Leg Recirculation Line	Leak is prevented by double check valves in series.
	Containment Spray/Residual Heat Removal Pump Hot Leg Suction Line	Leak is prevented by double MOVs in series.
	Emergency Letdown Line	Leak is prevented by double MOVs in series.
Cross-over Leg	Loop Drain Line	Leak is prevented by double manual valves in series.
	Excess Letdown Line	Leak is prevented by double air operated valve (AOVs) in series.
	RCS Cavity/RCS Level Meter Line	Leak is prevented by double manual valves in series.
Cold Leg	Accumulator Injection Line	Leak is prevented by double manual valves in series.
	Residual Heat Removal discharge line	Leak is prevented by double check valves in series.
Pressurizer	Pressurizer safety valve inlet line	Leak, if any, is detected by outlet thermometer.
	Safety depressurization valve inlet line	Leak, if any, is detected by outlet thermometer.
	Pressurizer auxiliary spray line	Since this line is isolated by AOV and check valve, there is a possibility of valve seat leakage into the RCS. The temperature difference between spray line flow and valve seat leakage flow is small. It is therefore considered that fatigue failure of this line caused by valve seat leakage and resulting thermal stratification or thermal oscillation is not concern.

Of the above places, only auxiliary spray line is In-leak.

Table 3.12-8 Evaluation from Viewpoint of Valve Gland Leakage

	Part	Remarks
Hot Leg	Containment Spray/Residual Heat Removal Pump Hot Leg Suction Isolation Valve	High-cycle fatigue is prevented by valve disk position adjustment so as to permit continuous leakage through the valve gland packing.
	Emergency Letdown Isolation Valve	High-cycle fatigue is prevented by valve disk position adjustment so as to permit continuous leakage through the valve gland packing.
Pressurizer	Safety Depressurization Valve	Inlet piping does not have a thermal shield, and the valve is sealed by water. The valve disc does not experience the high-temperature steam, and is maintained at a constant temperature, so that there is no contraction and expansion of the valve disc and therefore no thermal cycling.

3.13 Threaded Fasteners (ASME Code Class 1, 2, and 3)

3.13.1 Design Considerations

3.13.1.1 Materials Selection

This section addresses US-APWR standard plant and site-specific plant selection of threaded fastener materials for ASME Boiler and Pressure Vessel Code (ASME Code), Section III, Class 1, 2, and 3 systems (Reference 3.13-1), and applications from NUREG-0800, SRP 3.13 (Reference 3.13-2). Threaded fasteners used in US-APWR nuclear power plants comprise ASME Code Class 1, 2, and 3 fasteners (bolts, studs, nuts, washers, and screws). The materials used for all threaded fasteners are suitable for, and compatible with, the plant design temperatures, pressures, loads, stresses, and operating service conditions including corrosion and radiation exposures. ASME Code, Section III (Reference 3.13-1), provides acceptance standards for selecting threaded fasteners used in mechanical connections for ASME Code Class 1, 2, and 3 applications. Table 3.13-1 lists the applicable criteria in ASME Code, Section III (Reference 3.13-1), relevant to the material selection for threaded fasteners in Class 1, 2, and 3 systems. The use of suitable washers for bolting in accordance with NB-2128 (Table 3.13-1) is optional but is used for all three Code Classes. If washers are used, they are fabricated from wrought materials with mechanical properties compatible with the connecting nuts and bolts.

3.13.1.1.1 Class 1 Applications

ASME Code, Section III (Reference 3.13-1), Paragraphs NCA-1220 (Table 3.13-1), and NB-2128 provide the material selection criteria for threaded fasteners used in Class 1 applications. NB-2128 Bolting Material (Table 3.13-1) provides that material for bolts and studs shall conform to the requirements of one of the specifications listed in ASME Code, Section II (Reference 3.13-3), Part D, Subpart 1, Table 4. The materials for nuts should conform to either ASME SA 194, Specification for Carbon and Alloy Steel Nuts for Bolts for High Pressure and High Temperature Service, or to one of the specifications listed in Section II, Part D, Subpart 1, Table 4. Table 4 provides design stress intensities (allowable stresses) for bolting materials used in ASME Code, Section III (Reference 3.13-1), Division 1, Class 1 applications. Table 4 covers ferrous and nonferrous bolting materials. The nominal chemical compositions of the bolting materials are listed, by increasing ultimate tensile strengths, by increasing yield strengths, and finally by increasing specification numbers. For simplicity, the nut materials should comply with ASME SA 194 to secure the Table 4 bolt materials for Class 1 applications along with compatible hard washers as discussed below.

For bolting materials used for RV closure studs, RG 1.65 (Reference 3.13-4) provides acceptable criteria for selecting such bolt materials. Closure stud bolting is defined to include all studs (stud bolts), nuts, and washers used to fasten the RV head to the RV. The RV closure stud bolting is fabricated from materials with adequate toughness throughout the life cycle of the reactor as identified by the impact testing cited below. RV closure stud bolting meets the requirements in Subsection NB, Requirements for Class 1 Components, of Section III of the ASME Code (Reference 3.13-1). Stud bolts, nuts and washers are ASME Code, Section II, SA 540 Grade B24 material and satisfy the fracture toughness requirements of ASME Code, Section III (Reference 3.13-1), and 10 CFR 50,

Appendix G (Reference 3.13-5), as well as meeting the requirements of Subsection 5.3.1.7.

The requirements of the above paragraph are supplemented by the following:

a. The maximum measured ultimate tensile strength (UTS) of the stud bolting material should not exceed 170 ksi.

b. Charpy V-notch (C_v) impact testing for RV stud bolts should be in accordance with ASME Section III (Reference 3.13-1) Subsection NB and the results must satisfy Subsection NB and 10 CFR 50 Appendix G (Reference 3.13-5) requirements. C_v impact testing should be performed according to "Methods and Definitions for Mechanical Testing of Steel Products", ASME SA 370 (Reference 3.13-4), and the results must meet the requirements of Subsection NB and 10 CFR 50 Appendix G (Reference 3.13-5). In case a test fails, one retest may be conducted according to ASME Code, Section III (Reference 3.13-1), NB-2350 (Retesting), Table 3.13-1.

c. Stud bolting is not to be metal plated. Thread lubricants used are stable at operating temperatures and radiation levels and are compatible with the bolting and vessel materials and the service environment. The use of a suitable thread lubricant aids in preload torquing as well as assembly and disassembly of the RV closure stud bolts. Subsection 5.3.1.7 references the use of manganese base phosphate surfacing treatment on RV closure studs for added protection against corrosion.

3.13.1.1.2 Class 2 and 3 Applications

ASME Code, Section III (Reference 3.13-1), Paragraphs NCA-1220 and NC-2128 (Table 3.13-1) provide the material selection criteria for threaded fasteners used in Class 2 applications. The criteria for selecting bolt materials for ASME Code Class 3 applications are specified in Paragraphs NCA-1220 and ND-2128. In accordance with Paragraphs NC-2128 and ND-2128, bolting materials conform to one of the specifications listed in ASME Section II, Part D, Subpart 1, Table 3 (Reference 3.13-3). The materials used for nuts should conform to either ASME SA 194 or to one of the specifications listed in Subpart 1, Table 3. For consistency, the nut materials should comply with ASME SA 194 to secure the Table 3 bolt materials for Class 2 and 3 applications. Again, the use of washers is optional but recommended. When used, washers are made of wrought material with mechanical properties compatible to the connecting SA 194 nut and bolting materials.

Hard washers of suitable wrought materials for Class 1, 2, and 3 fastener applications should be employed in designing bolted connections for the following benefits as cited in References 3.13-6 and 3.13-7.

a. Washers distribute the load placed by the bolt or nut on the joint and thus increase the ratio of joint and bolt stiffness. This can help reduce bolt fatigue problems.

b. Washers make the interface forces between joint members more uniform, which can improve gasket performance.

c. Washers can bridge slotted or oversized holes, aiding assembly of poorly mated parts.

d. Washers can significantly reduce the friction between a turning nut and the joint members. This reduces the size of the bolting tool required, reduces the torques required, and often improves the accuracy and repeatability of the torquing operations.

e. Washers can prevent damage to soft joint surfaces.

f. Washers reduce the amount of embedment between nut, bolt, and joint members, reducing relaxation after tightening.

3.13.1.2 Special Materials Fabrication Processes and Special Controls

The criteria for mechanical property testing of threaded fastener materials are identified in the specification of "Ferrous Materials Specifications", ASME Code, Section II, Part A (Reference 3.13-3). This includes specifying the proper mechanical tests in accordance with Part A for each type of threaded fastener. Table 3.13-1 identifies the appropriate section of the ASME Code regarding material heat treatment and tensile test coupon preparation criteria for ferritic materials (e.g., carbon steel, high strength low alloy [HSLA] steel). In cases of conflict between the two criteria applicable to mechanical testing, ASME Code, Section III (Reference 3.13-1), Subparagraphs NB-2200, NC-2200, and ND-2200 are used in lieu of ASME Code, Section II, Part A.

3.13.1.2.1 Material Test Coupons and Specimens for Ferritic Steel Material (Tensile Test Criteria)

The Heat Treatment Criteria for Ferritic Material are described in NB-2210, NC-2210, and ND-2210, Table 3.13-1. Where ferritic steel material is subjected to heat treatment during fabrication or installation of a fastener, the material used for the tensile and impact test specimens is heat treated in the same manner as the fastener, except that test coupons and specimens for P-No.1 Group Nos. 1 and 2 material with a nominal thickness of 2 inches or less are not required to be so heat treated. The certificate holder provides the material organization with the temperature and heating and cooling rates to be used.

3.13.1.2.2 Test Coupons Requirements for Bolting/Stud Materials

Under general requirements in NB-2221, NC-2221, and ND-2221 (Table 3.13-1), the coupon and specimen locations and the number of tensile test specimens are in accordance with the material specifications. In accordance with ASME Code, Section III (Reference 3.13-1), Paragraph NB-2224(b), tests are made of either full size bolts or test coupons as required by the base specification. The gage lengths of the tension specimens and the area under the notch of Charpy specimens are at least one diameter or thickness from the heat-treated end. Under ASME Section III (Reference 3.13-1) Paragraph NC-2224.3, the coupons are taken in accordance with the applicable material specification and with the midlength of the specimen at least one diameter or thickness from the heat-treated end. When the bolts, studs, or nuts are not sufficiently long, the midlength of the specimen is defined as the midlength of the fastener components. The bolts, studs, or nuts selected to provide test coupon material are identical with respect to the quenched contour and size except for length, which equals or exceeds the length of the chosen fastener components. The same material test coupon and specimen

requirements for NC-2224.3 apply to Paragraph ND-2224.3 (Bolting Material), Table 3.13-1.

3.13.1.2.3 Reactor Vessel Closure Stud Bolting

HSLA RV stud bolting is fabricated on grades of steel such as ASME SA 540 B24, using closely controlled procedures on quenching and tempering. Proper control of the tempering procedure is necessary to obtain the desired balance of mechanical properties. The objective is a tough bolting material with optimum strength, ductility and impact strength. HSLA RV stud bolt materials, when tempered to a maximum UTS of 170 ksi, are relatively immune to SCC. Above this UTS level, HSLA steels become increasingly susceptible to SCC. Design conservatism is therefore followed so that the specified strength level of the material selected will not result in a measured UTS exceeding 170 ksi, thus mitigating possible SCC of the bolting.

Properly heat-treated HSLA steels are generally used as RV closure stud bolting materials. It is important that bolting material has adequate toughness throughout the reactor operating cycle. For high strength large diameter bolting, great care must be taken to assure adequate fracture toughness. Control of the tempering procedure is essential for this purpose. Fracture toughness for ASME SA 540 Gr. 24 HSLA steel as measured by energy absorption can be moderately increased by suitable metallurgical practices.

RV closure studs and nuts have a minimum C_v energy (impact strength) of 45 ft-lb and a minimum lateral expansion of 0.025 inch. In general, RV closure stud bolts are removed prior to raising the water level during refueling or other operations involving vessel head removal, and to provide seal plugs to insert into the RV flange stud holes to protect against corrosion and contamination during stud removal. The COL Applicant is to provide information on procedures for effective corrosion protection for the stud bolting following head removal and allow the ISI to be performed on the removed RV stud bolting.

3.13.1.2.4 General Corrosion and Stress Corrosion Cracking of Threaded Fasteners

In nuclear reactor environments involving threaded fasteners, there are two major forms of corrosion: General and SCC (see References 3.13-6 and 3.13-7). General corrosion of carbon steel and HSLA steel fasteners can occur in a reactor primary coolant containing borated water or boric acid. While relatively low levels of boric acid are used in reactor coolant systems, under wetting and drying conditions the boric acid solution can concentrate and become quite corrosive to carbon steel and HSLA steel fasteners. Generally, coatings, plating and surface treatments of ferritic bolting materials have not proven effective against hot, concentrated boric acid. Corrosion resistant fastener materials such as the austenitic stainless steels (SSs) (e.g., 316) offer good resistance to boric acid corrosion. The boric acid corrosion problem is due to leaking coolant, which concentrates the dilute acid to much higher levels. Without such leaks, carbon steel and HSLA steel bolting generally perform well. Thus, preventing leaks will basically control boric acid corrosion of ferritic fastener materials.

SCC is a form of localized corrosion in which a fastener that is statically loaded well below the material yield strength can suddenly fail. SCC requires three essential

conditions for this sudden failure: (1) a susceptible material; (2) sufficient tensile stresses; and (3) a corrosive environment or species (e.g., chlorides). If any one of these three conditions is absent or eliminated, SCC will not occur. Temperature is another key factor along with stress crack initiators such as pits. SCC failures have occurred in both pressure boundary bolting and in structural supports. The pressure boundary failures were initiated by sharp thread roots (stress concentrators), leaks, and sealing repairs, which provided a corrosive environment. To prevent SCC, fastener designers should use a lower strength bolting material not subject to SCC by limiting the hardness of the fastener to a Rockwell C Hardness (HRC) below 40 (375 Brinell hardness number) in humid air and even lower HRC (Brinell hardness number]) for more corrosive media. Other SCC control measures include reducing stress levels, eliminating stress concentrations due to thread defects and thread root radius, performing good housekeeping, and properly storing of fasteners until installed. SCC can be avoided by limiting the preload to some threshold stress level using a fracture mechanics technique. If feasible and applicable, controlled shot peening of bolting can prevent SCC by inducing a shallow surface layer of compressive stresses since SCC requires tensile stresses to occur. With bolting materials such as SA 193 and SA 540, SCC can be avoided through control of stress and environmental factors. Good housekeeping practices that control boric acid attack should reduce the potential for SCC. Leaks from flanged joints should be eliminated or minimized. All spillage of primary coolant during maintenance operations should be removed promptly to prevent contamination. Such actions will reduce the possibility that a hostile environment will initiate SCC. Stress levels should be controlled whenever possible, since the susceptibility to SCC decreases when tensile stresses are reduced.

Regarding possible Galvanic Corrosion of threaded fasteners, while the selection of bolting should consider electrochemical compatibility of the mating materials, galvanic (dissimilar metal) corrosion should not be a problem for the following reasons: The Galvanic Series of Metals and Alloys (typically in ambient seawater) lists the half-cell potentials of metals from the most anodic (active, corroding) to the most cathodic (passive, noble). (In galvanic corrosion, the anodic metal corrodes while the cathodic metal is protected.) The greater the distance between the metals in the series, the greater the galvanic corrosion effect. Thus, metals close to one another should be used in bolted connections to minimize the potential difference (driving force) between the two metals. The other key factor in galvanic corrosion is the area ratio between the dissimilar metals. A large anode/cathode area ratio is preferred for minimal galvanic corrosion. A small anode/cathode area ratio will increase the current density, thus promoting localized attack (pitting) of the anodic metal (typically carbon steel or HSLA steel surfaces).

Fastener alloys with relatively small areas are either the same as or cathodic to the larger anodic base metal being joined. For example, SS bolting (cathode) connecting carbon steel or HSLA components (anode) is a favorable area ratio. This results in any galvanic corrosion being uniformly distributed over the larger, thicker carbon steel/HSLA part (low current density) with nil loss of the SS bolting. HSLA steel bolting has virtually the same electrochemical potential (or may be slightly cathodic) as carbon steel components, resulting in a negligible galvanic corrosion effect. For these reasons, galvanic corrosion of threaded fasteners should not pose a problem. If the above corrosion control measures are practiced, the two main potential forms of fastener corrosion (General and SCC) should be mitigated by preventing leakage and carefully selecting corrosion resistant bolting materials.

3.13.1.2.5 Fastener Thread Lubricants and Sealants

Lubricants: For typical high temperature, high-pressure nuclear primary coolant conditions, there are three main generic dry film lubricants available for use on threaded fasteners: graphite, "Teflon" polytetrafluoroethylene (PTFE), and molybdenum disulfide (MoS_2). As stated in Reference 3.13-8, which cites Reference 3.13-9, MoS_2 is known to promote corrosion in HSLA fasteners and should not be used on any type of nuclear fastener regardless of material. MoS_2 can react with borated water to form corrosive acids, hydrogen sulfide (H_2S) and sulfuric acid (H_2SO_4), both aggressive to ferritic steel fasteners. Steam generator manway cover studs with evidence of MoS_2 lubricant have failed from SCC. NUREG-1339 (Reference 3.13-8) strongly opposes MoS_2 lubricant as detrimental and a potential contributor to SCC, especially when applied to HSLA bolting materials and thus is not used for this application. PTFE has the lowest friction coefficient of any solid and has very good chemical resistance and thermal stability. However, PTFE has poor radiation resistance and, therefore, is not used in the primary containment area or any other high radiation zones. A better all-purpose, inorganic thread lubricant is graphite, which also has good lubricity (low friction coefficient) with high thermal stability and radiation resistance. One commercial product used in nuclear power plants is "Neolube," a graphite-based sealant/lubricant. Nuclear grade Neolube #1260 has excellent thermal stability (to 1200°F) and high radiation resistance (1.5 x 109 radiation absorbed dose). Neolube #1260 also seals up to 7,500 psi. This graphite flake paste is compatible with any ferritic or austenitic alloy bolting material and is thus acceptable for use. The use of a suitable thread lubricant aids in the bolting assembly and reduces the preload torque requirements. It also prevents seizing and galling of austenitic (300 Series) SS bolts, studs, and nuts. Galling is the cold welding of one heavily loaded metal surface to another, and dry (unlubricated) austenitic SS fasteners tend to gall if over-torqued. Thread lubrication will avoid this problem. In accordance with Reference 3.13-6, other acceptable thread lubricants and anti-seize products include: Fel-Pro C54, C670, N5000 and N7000, and Nuclear Grade Neverseez (e.g., Nickel Special [Ni-based]). Copper-based anti-seize compounds are not to be used to avoid possible galvanic (dissimilar metal) corrosion problems and possible contamination of the primary coolant. Thread lubricants must be compatible (nil chlorides, fluorides and sulfides) with the fastener materials and the service environment including design temperature. A thin uniform film of lubricant must be applied to the threads and bearing surfaces. Therefore, graphite (e.g., Neolube #1260) is considered a generally acceptable thread lubricant for nuclear fasteners, while MoS_2 is not to be used at all, and PTFE is unsuitable for primary containment applications because of low radiation resistance.

Sealants: Reference 3.13-6 discusses the use of and guidelines for leak sealants including bolt thread sealants. The application of leak sealants should be considered as temporary solutions, with leaking components repaired or replaced at the next available opportunity. Repairs should involve complete removal of the sealant and restoration of the component to its original condition or configuration. Controlled standard practices guide and assure the adequacy of leak sealing operations, which include: (a) Certified chemical analyses for each batch of sealant, test and document for each sealant batch or lot to establish chemical compatibility with bolting materials; (b) Sealant cavity pressure (closely monitored during the injection operation); and (c) Sealant volume needed prior to injection or application to avoid/minimize excess sealant from entering the reactor coolant. Well-designed, properly lubricated fasteners do not generally employ or require thread sealants, which are temporary solutions and are not a part of a sound bolting design and installation program. An exception to temporary thread sealants is the

graphite-based Neolube #1260, which is both a sealant and lubricant for bolting. RG 1.37 (Reference 3.13-9) describes the Quality Assurance requirements for cleaning fluid systems and associated components including threaded fasteners of water-cooled nuclear power plants. The water quality for final flushes and associated components is generally at least equal to the quality of the operating system water in accordance with "Cleaning of Fluid Systems and Associated Components During Construction Phase of Nuclear Power Plants", ANSI N45.2.1 (Reference 3.13-10). ANSI N45.2.1 allows that low (nil) levels of sulfur, fluorine, and/or chlorine compounds be used on austenitic SSs. In addition, low (nil) sulfur and low (nil) lead compounds also may be used on nickel-base alloys. Chemical compounds (e.g., thread lubricants, sealants) that could contribute to SCC are not be used with austenitic SSs and nickel-base alloys, such as compounds (products) containing leachable chlorides, fluorides, lead, zinc, copper, sulfur, or mercury. Since MoS_2 contains high sulfur levels and PTFE is fully fluorinated, these two lubricants are not acceptable for primary coolant system service along with other reasons discussed above (corrosion, poor radiation resistance). The COL Applicant is to provide information on procedures for the final selection of lubricants, sealants, and cleaning fluids.

3.13.1.3 Fracture Toughness Requirements for Threaded Fasteners Made of Ferritic Materials

For threaded fasteners made from ferritic (carbon steel and HSLA) steels in ASME Code, Section III (Reference 3.13-1), Class 1 systems, the fracture toughness properties and associated impact testing are in compliance with the applicable acceptance criteria described in Reference 3.13-5. However, these fracture toughness requirements do not apply to ferritic bolts, studs, and nuts used in Class 2 or 3 applications. 10 CFR 50.55a (Reference 3.13-11) invokes fracture toughness requirements in ASME Section III (Reference 3.13-1), Subarticles NC and ND for ferritic bolting used in Class 2 and 3 applications where the appropriate Section III (Reference 3.13-1) criteria in Table 3.13-1 applies.

For Class 1 Applications, ferritic steel bolts, studs, and nuts used in the RCPB have fracture toughness properties meeting the requirements for ferritic (carbon steel and HSLA) steels specified in Subarticle NB, ASME Code, Section III (Reference 3.13-1) and meet the fracture toughness criteria of 10 CFR 50, Appendix G (Reference 3.13-5). These requirements apply to ferritic materials for bolting and other types of fasteners with specified minimum yield strengths below 130 ksi.

The following fracture toughness criteria apply to ASME Code, Section III (Reference 3.13-1), Class 1, 2, and 3 bolting materials (see Table 3.13-1):

- Material to be impact tested: NB-2311, NC-2311, and ND-2311 state that bolting, including bolts, studs, and nuts, with a nominal size of 1 inch or less do not require impact testing. Likewise, austenitic SSs and nonferrous materials need not be impact tested. Thus, only ferritic steel bolting with a nominal size more than 1 inch requires impact testing.
- Types of impact tests: Two types of impact tests are specified under NB-2321.1 and NC-2321.1:
  - Drop Weight Tests: When required, this impact test is performed in accordance with ASTM E208. Specimen types P-Nos. 1, 2, or 3 may be

used. The results, orientation, and location of all tests conducted to meet the requirements of NB-2330 are reported in the certified material test report.

– C_v Tests: When required, this impact test is performed in accordance with SA-370 with specimens in accordance with SA-370, Figure 11, Type A. A test comprises a set of three full size 10 mm by 10 mm specimens. The lateral expansion and absorbed energy, as applicable, and the test temperature along with the orientation and location of all tests conducted to meet the requirements of NB-2330 and NC-2330 are reported in the certified material test report. In ND-2321, the C_v test, when required, is performed in accordance with SA-370 with specimens in accordance with SA-370, Figure 11, Type A. The same C_v tests and specimens cited above for NB-2321.1 and NC-2321.1 are used, and the C_v test results meeting the requirements of ND-2330 are reported in the certified material test report.

- Test Coupons: NB-2322.l, NC-2322.1, and ND-2322.1 describe the location of test specimens. Impact test specimens are removed from the locations specified for tensile test specimens in the material specification. For bolting, the C_v impact test specimens are taken with the longitudinal axis of the specimens located at least one-half radius or 1 inch below the surface plus the machining allowance per side, whichever is less. The fracture plane of the specimens is at least one diameter or thickness from the heat-treated end. When the bolts, studs, or nuts are not sufficiently long, the mid-length of the specimen is at the mid-length of the fastener components. The bolts, studs, or nuts chosen to provide test coupon material are identical regarding the quenched contour and size except for length, which is equal to or exceeds the length of the selected fastener components. NB-2322.2 (orientation of impact test specimens) specifies that specimens obtained from bolting material for C_v impact testing shall be oriented in the axial direction. The notch of the C_v material is normal to the material surface for ASME Code Class 1, 2, and 3. NC-2322.2 (orientation of impact test specimens) specifies that specimens for C_v impact tests is oriented as required in NC-2200 for the tensile test specimen, or the orientation may be in the direction of maximum stress. ND-2321 covers only C_v impact test procedures, not drop weight impact tests, and has similar requirements for the C_v testing, ND-2322.1 for test coupon location, and ND-2322.2 for specimen orientation as the above two sections.

- Acceptance Standards: NB-2333 (bolting material) specifies that for bolts, studs, and nuts, three C_v specimens are tested at a temperature no higher than the preload temperature or the lowest service temperature, whichever is less. All three specimens meet the requirements of Table NB-2333-1, which lists the required lateral expansion and absorbed energy as a function of the nominal diameter of the bolting material. In NC-2333 and ND-2333 for bolting material, the C_v tests are performed at or below the lowest service temperature, and all three specimens are to meet the requirements of Table NC-2332.3-1 and Table ND-2333-1, respectively.

- Number of Impact Tests Required: NB-2345, NC-2345, and ND-2345 state that one test is made for each lot of material, where a lot is defined as one heat of material that is heat treated in one charge or as one continuous operation, not to exceed certain weights (mass), as a function of the bolting diameter.

- Retesting (NB-2350, NC-2352, ND-2352): For C_v tests required by NB-2333, NC-2332.3, and ND-2333, one retest at the same temperature may be conducted provided the requirements of the following are met:
  - The average value of the test results meets the minimum requirements.
  - No more than one specimen per test is below the minimum requirements.
  - The specimen not meeting the minimum requirements is not less than 10 ft-lb or 5 mils below the specified requirements. A retest comprises two additional specimens taken as near as feasible to the failed specimens. To accept the retest, both specimens shall meet the minimum requirements.
- Calibration of the Test Equipment: NB-2360, NC-2360, and ND-2360 state that calibration of temperature instruments and C_v impact test machines used in impact testing are performed at the following frequency:
  - Temperature instruments used to control test temperatures of specimens are calibrated and the results recorded in accordance with NCA-3858.2 at least once every three months.
  - C_v impact test machines are calibrated and the results recorded in accordance with NCA-3858.2 requirements. Such calibrations are conducted using the methods and frequency described in ASTM E23 and using standard specimens obtained from the National Institute of Standards and Technology (NIST).

For Fabrication Inspection/Examination Criteria for Bolts, Studs, and Nuts (Table 3.13-1), ASME Code, Section III (Reference 3.13-1) Class 1 bolting material (bolts, studs, and nuts) specifies the following inspection methods for Class 1 fastener components in accordance with NB-2580:

- Required Examinations: NB-2581 requires that all bolting material be visually examined in accordance with NB-2582. Nominal sizes over 1 inch are generally examined by the magnetic particle examination method (MT) for carbon steel and HSLA steels, and the liquid penetrant examination method (PT) for SS. Also, nominal sizes above 2 inches but not over 4 inches are examined by the ultrasonic examination method (UT) in accordance with NB-2585, and nominal sizes greater than 4 inches are examined by UT in accordance with NB-2586. NB-2582 (visual examination) requires that the areas of threads, shanks, and heads of final machined parts be visually examined. Harmful defects or discontinuities such as laps, seams, or cracks that would be detrimental to the intended service are unacceptable. NB-2583: MT of ferritic steel bolting material are performed in accordance with ASTM A275. Alternately, PT of ferritic steel bolting may be performed in accordance with NB-2584, if desired. Either nondestructive examination (NDE) method should be performed on the finished bolting, or on the materials stock at approximately the finished diameter before threading and after heading (if done), and performed on all accessible surfaces. Under evaluation of indications, the ASME Code specifies that all nonlinear, nonaxial indications are unacceptable, regardless of length. These same acceptance standards apply to examination of bolting above 1 inch nominal bolt size by the PT in accordance with ASME Code, Section V, Article 6 (Reference 3.13-12), under NB-2584.

- UT Examination of Bolting: As described in Section 5.3.1.7, material for stud bolts, nuts and washers are UT examined in accordance with ASME Code Section III (Reference 3.13-1), NB-2580, after final heat treatment but prior to machining of threads. The stud bolt surfaces are to be examined by straight beam UT examinations in two directions in accordance with ASME Code, Section III (Reference 3.13-1), NB-2585, and ASME Code Section V, Article 23, SA 388. Surface examinations are to be performed in accordance with ASME Code Section III (Reference 3.13-1), NB-2583. NB-2585 covers UT of bolting over 2 inches nominal bolt size in which the entire cylindrical surface prior to threading is examined in accordance with SA-388 of Section V, Article 23. Any discontinuity that causes an indication over 20% of the height of the first back reflection or that prevents the production of a first back reflection of 50% of the calibration amplitude is unacceptable. NB-2586 covers UT of bolting above 4 inches nominal bolt size where such bolting is examined over the entire surface of each end before or after threading by the straight beam, longitudinal scan method. Any discontinuity that causes an indication in excess of that produced by the calibration hole in the reference specimen as corrected by the distance-amplitude curve is unacceptable. Acceptance examination of bolting are performed after the final heat treatment required by the basic material specification. Unacceptable surface defects on finished bolting (bolts, studs, and nuts) are not allowed and are cause for rejection. Weld repairs of bolting are not permitted.
- Examination Criteria for ASME Class 2 and 3 Bolting: For Class 2 and Class 3 bolting materials, only visual examination of bolts, studs, and nuts is required in accordance with NC-2581 and ND-2582. According to NC-2582 and ND-2582, such visual examinations are made on the areas of threads, shanks, and heads of final machined parts. Harmful defects and discontinuities such as laps, seams, or cracks that would be detrimental to the intended service are unacceptable.

3.13.1.4 [Reserved]

3.13.1.5 Certified Material Test Reports

The COL Applicant is to retain quality records including certified material test reports for all property test and analytical work performed on nuclear threaded fasteners in accordance with the requirements of 10 CFR 50.71 (Reference 3.13-13) (Maintenance of Records, Making of Reports). The results of bolting material chemical analyses, fabrication, and mechanical property tests in applicable certified material test reports are retained in accordance with ASME Code, Section III (Reference 3.13-1), Subsection NB, NC, and ND. The certified material test report criteria for all three classes are covered in NCA-3860 (Certification Requirements) as summarized below (Table 3.13-1):

- NCA-3861, Certification Requirements for Material Organization: The material organization whose scope of activities includes NCA-3830 (Responsibilities of Material Organizations) provides a certified material test report or certificate of compliance, as applicable (NCA-3862), for the material. Except where certificate of compliances are acceptable, the material organization transmits all certifications required by NCA-3862.1(b), received from other material organizations, or approved suppliers to the purchaser at the time of shipment. The Certificate Holder completes all activities not completed by the material

organization and provides a certified material test report for all activities performed by him or his approved suppliers.

- NCA-3862.1, Material Certification: The certified material test report includes the actual results of all required chemical analyses, tests, and examinations. Notarization of the certified material test report is not required. A certificate of compliance with the material specification, grade, class, and heat-treated condition, as applicable, may be provided in lieu of a certified material test report for bolting 1 inch and less. Material identification is described in the certified material test report or certificate of compliance, as applicable. Heat or lot traceability to the certificate of compliance is not required.
- NCA-3862.2, Quality System Program Statement: When the material organization holds a quality system certificate, its quality system certification number and expiration date are shown on the certified material test report or certificate of compliance, as applicable, or on a certification included with the documentation accompanying the material.

3.13.2 Inservice Inspection Requirements

The preservice inspection and ISI of threaded fasteners comply with the requirements of Reference 3.13-11 and the criteria of ASME Code, Section XI (Reference 3.13-14) (Rules for ISI of Nuclear Power Plant Components) for bolting and mechanical joints used in ASME Code, Class 1 and 2 systems (Reference 3.13-14). Table 3.13-2 lists the ASME Section XI (Reference 3.13-14) Examination Categories for ISI of Mechanical Joints in ASME Code, Class 1 and 2 systems that are secured by threaded fasteners. The COL Applicant is to address compliance with ISI requirements as summarized below.

The preservice and periodic ISI (visual, surface, volumetric) are required and performed in accordance with ASME Code, Section XI (Reference 3.13-14), tabulated in IWB-2500-1, for Category B-G-1 and B-G-2 for ASME Code, Class 1 systems bolting and in IWC-2500-1 for ASME Class 2 systems bolting. In addition to the above periodic ISI for bolting, during the performance of pressure tests for ASME Class 1, 2, and 3 systems pressure boundary, required by the ASME Code, Section XI (Reference 3.13-14), Article IWA-5000 (specifically, IWB-2500, IWC-2500, AND IWD-2500), if leakage occurs at a bolted joint, the bolting is removed, VT-3 visually examined for corrosion, and evaluated in accordance with IWA-3100 of the ASME Code, Section XI (Reference 3.13-14). Subsection 3.9.6 provides information relating to system pressure testing.

Under Examination Types, the Specific Bolting Inspections for ASME Class 1 bolting criteria are covered in Table IWB-2500-1, Exam Cat. B-G-1 for bolting greater than 2 inches in diameter. This table lists the following seven Parts Examined: RV; pressurizer; steam generators; heat exchangers; piping; pumps; and valves. Each of these parts includes several components to be examined. For example, the RV comprises: closure head nuts, closure studs, threads in flange, and closure washers. For each component part, the Examination Method (visual, volumetric) is noted; acceptance standards are IWB-3517 (visual) and IWB-3515 (volumetric); and the extent and frequency of examinations listed along with a permissible deferral of examination to end of interval. For smaller Class 1 bolting (less than or equal to 2 inches in diameter), Table IWB-2500-1, Examination Category B-G-2, applies. The parts listed above are

now only visually examined with the same acceptance standard (all in accordance with IWB-3517). Again, the extent and frequency of examinations are shown with the deferral of examination to end of interval not permissible.

For ASME Class 2 bolting criteria, only bolting greater than 2 inches is examined in accordance with Table IWC-2500-1, Examination Category C-D. Four parts examined are listed: pressure vessels (bolts and studs); piping (bolts and studs); pumps (bolts and studs); and valves (bolts and studs). Each of these four parts is examined by the volumetric method with IWC-3513 as the acceptance standard. When bolts or studs are removed for examination, surface examination meeting the acceptance standards of IWB-3515 may be substituted for volumetric examination. Extent of examination: 100% bolts and studs at each bolted connection of components are inspected for each inspection period. The areas chosen for the initial examination are reexamined in the same sequence over the service life of the component to the extent practical. For ASME Class 3 bolting criteria, the specific bolting inspections are not applicable. There are currently no ASME Class 3 examination categories that correspond to those that exist for ASME Code Class 1 and 2 threaded fasteners.

The COL Applicant is to commit to complying with the requirements of ASME Code, Section XI, IWA-5000 (Reference 3.13-14), and the requirements of 10 CFR 50.55a(b)(2)(xxvi) (Reference 3.13-11), Pressure Testing Class 1, 2, and 3 Mechanical Joints, and Paragraph (xxvii) Removal of Insulation for application of the ISI program for pressure testing of mechanical joints utilizing threaded fasteners. Article IWA-5000, system pressure tests, covers system test requirements, test pressurization boundaries, visual examination of insulated and non-insulated components, corrective action, and test records. If leakage occurs in insulated components in borated water systems, insulation is removed from pressure retaining bolted joints for visual examination. If leakage occurs at a bolted connection in a borated system, one of the bolts closest to the leakage is removed, visually examined, and evaluated in accordance with IWA-3100. If the removed bolt has evidence of corrosion damage, all remaining bolting in the connection is removed, visually examined, and evaluated in accordance with IWA-3100. If boric acid residues are found on components, the leakage source and areas of general corrosion are located. Components with local areas of general corrosion resulting in wall thinning by more than 10% are evaluated to determine if the component is acceptable for continued service, or whether repair/replacement actions will be performed. Any source of leakage or evidence of structural degradation is recorded and the location and corrective actions documented.

In 10 CFR 50.55a(b)(2)(xxvi) (Reference 3.13-11) Pressure Testing Class 1, 2, and 3 Mechanical Joints, the repair and replacement activity provisions in IWA-4540(c) of the 1998 Edition of Section XI (Reference 3.13-14) for pressure testing Class 1, 2, and 3 mechanical joints must be applied when using the 2001 Edition through the latest edition and addenda incorporated by reference in paragraph (b)(2) of this section. Under 10 CFR 50.55a(b)(2)(xxvii) (Reference 3.13-11) Removal of Insulation, when performing visual examinations, insulation must be removed from 17-4 PH or 410 SS studs or bolts aged at a temperature below 1,100°F or having an HRC above 30 (285 Brinell [Brinell hardness number]), and from A-286 SS studs or bolts preloaded to 100 ksi or greater.

3.13.3 Combined License Information

COL 3.13(1) *The COL Applicant is to provide information on procedures for effective corrosion protection for the stud bolting following head removal and allow the ISI to be performed on the removed RV stud bolting.*

COL 3.13(2) *The COL Applicant is to provide information on procedures for the final selection of lubricants, sealants, and cleaning fluids.*

COL 3.13(3) *The COL Applicant is to retain quality records including certified material test reports for all property test and analytical work performed on nuclear threaded fasteners in accordance with the requirements of 10 CFR 50.71.*

COL 3.13(4) *The COL Applicant is to address compliance with ISI requirements as summarized in Subsection 3.13.2.*

COL 3.13(5) *The COL Applicant is to commit to complying with the requirements of ASME Code, Section XI, IWA-5000 (Reference 3.13-14), and the requirements of 10 CFR 50.55a(b)(2)(xxvi) (Reference 3.13-11), Pressure Testing Class 1, 2, and 3 Mechanical Joints, and Paragraph (xxvii) Removal of Insulation.*

3.13.4 References

3.13-1 ASME Boiler and Pressure Vessel Code, Section III. 2001 Edition through the 2003 Addenda, American Society of Mechanical Engineers.

3.13-2 Threaded Fasteners - ASME Code Class 1, 2, and 3. NUREG-0800 Standard Review Plan (SRP), Section 3.13, U.S. Nuclear Regulatory Commission, Washington, D.C., March, 2007.

3.13-3 ASME Boiler and Pressure Vessel Code, Section II. 2001 Edition through the 2003 Addenda, American Society of Mechanical Engineers.

3.13-4 Materials and Inspections for Reactor Vessel Closure Studs. Regulatory Guide 1.65, U.S. Nuclear Regulatory Commission, Washington, D.C., October 1973.

3.13-5 Fracture Toughness Requirements, Domestic Licensing of Production and Utilization Facilities, Energy. Title 10, Code of Federal Regulations, Part 50, Appendix G, U.S. Nuclear Regulatory Commission, Washington, D.C.

3.13-6 Good Bolting Practices – A Reference Manual for Nuclear Power Plant Maintenance Personnel, Large Bolt Manual. Electric Power Research Institute, NP-5067, Volume I, 1987.

3.13-7 Good Bolting Practices – A Reference Manual for Nuclear Power Plant Maintenance Personnel, Small Bolt Manual. Electric Power Research Institute, NP-5067, Volume II, 1990.

3.13-8 Resolution of Generic Safety Issue 29: Bolting Degradation or Failure in Nuclear Power Plants. NUREG-1339, U.S. Nuclear Regulatory Commission, Washington, DC, June, 1990.

3.13-9 Quality Assurance Requirements for Cleaning of Fluid Systems and Associated Components of Water-Cooled Nuclear Power Plants. Regulatory Guide 1.37, Rev.1, March, 2007.

3.13-10 Cleaning of Fluid Systems and Associated Components During Construction Phase of Nuclear Power Plants, ANSI N45.2.1, American National Standards Institute, 1973.

3.13-11 Codes and Standards, Domestic Licensing of Production and Utilization Facilities, Energy. Title 10, Code of Federal Regulations, Part 50.55a, U.S. Nuclear Regulatory Commission, Washington, D.C.

3.13-12 Nondestructive Examination, ASME Code, Section V, 2001 Edition through the 2003 Addenda, American Society of Mechanical Engineers.

3.13-13 Maintenance of Records, Making of Reports, Domestic Licensing of Production and Utilization Facilities, Energy. Title 10, Code of Federal Regulations, Part 50.71, U.S. Nuclear Regulatory Commission, Washington, D.C.

3.13-14 Rules for Inservice Inspection of Nuclear Power Plant Components, ASME Code, Section XI, 2001 Edition through the 2003 Addenda, American Society of Mechanical Engineers.

Table 3.13-1 ASME Code, Section III Criteria for Selection and Testing of Bolting Materials(1)

Code Category		ASME Class 1 Criteria	ASME Class 2 Criteria	ASME Class 3 Criteria
Material Selection		NCA-1220 and NB-2128	NCA-1220 and NC-2128	NCA-1220 and ND-2128
Material Test Coupons and Specimens for Ferritic Steel Material (Tensile Test Criteria)	Heat Treatment Criteria	NB-2210	NC-2210	ND-2210
	Test Coupons Requirements Bolting/Stud Materials	NB-2221 NB-2224.3	NC-2221 NC-2224.3	ND-2221 ND-2224.3
Fracture Toughness Requirements	Material to be Impact Tested	NB-2311	NC-2311	ND-2311
	Types of Impact Test	NB-2321	NC-2321	ND-2321
	Test Coupons	NB-2322	NC-2322	ND-2322
	Acceptance Standards	NB-2333	NC-2332.3	ND-2333
	Number of Impact Tests Necessary	NB-2345	NC-2345	ND-2345
	Retesting	NB-2350	NC-2352	ND-2352
	Calibration of Test Equipment	NB-2360	NC-2360	ND-2360
Examination Criteria for Bolts, Studs, and Nuts		NB-2580	NC-2580	ND-2580
Certified Material Test Report Criteria		NCA-3860	NCA-3860	NCA-3860

Note :

1. Section III paragraphs listed in this table represent those specified in the 2001 Edition of Section III.

Table 3.13-2 ASME Code, Section XI Examination Categories for Inservice Inspections of Mechanical Joints in ASME Code Class 1, 2, and 3 Systems that are Secured by Threaded Fasteners(1)

Examination Type	ASME Class 1 Criteria	ASME Class 2 Criteria	ASME Class 3 Criteria
Specific Bolting Inspections	Table IWB-2500-1, Exam. Cat. B-G-1 for bolting greater than 2 inches in diameter	Table IWC-2500-1, Exam. Cat. C-D for bolting greater than 2 inches in diameter	Not Applicable – Currently there are no examination categories that correspond to those that exist for ASME Class 1 and 2 bolting
	Table IWB-2500-1, Exam. Cat. B-G-2 for bolting less than or equal to 2 inches in diameter		
System Pressure Tests	Table IWB-2500-1, Exam. Cat. B-P	Table IWC-2500-1, Exam. Cat. C-H	Table IWD-2500-1, Exam. Cat. D-B

Note :

1. Section XI paragraphs listed in this table represent those specified in the 2001 Edition of Section XI.

APPENDIX 3A

HEATING, VENTILATION, AND AIR CONDITIONING DUCTS AND DUCT SUPPORTS

CONTENTS

Page

3A Heating, Ventilation, and Air Conditioning Ducts and Duct Supports

3A.1 Description....3A-1

3A.1.1 Seismic Category I Ductwork....3A-1

3A.1.2 Seismic Category II Ductwork....3A-2

3A.2 Applicable Codes, Standards and Specifications....3A-2

3A.3 Loads and Load Combinations....3A-2

3A.3.1 Loads....3A-2

3A.3.2 Load Combinations....3A-2

3A.4 Design and Analysis Procedures....3A-3

3A.4.1 Simplified Design Approach....3A-3

3A.4.2 Detailed Design Approach....3A-3

3A.4.3 Axial Brace Spacing....3A-3

3A.4.4 Lateral Brace Spacing....3A-3

3A.5 Structural Acceptance Criteria....3A-4

3A.5.1 Allowable Stresses....3A-4

3A.5.2 Deflection Limitations....3A-4

3A.6 Materials....3A-4

3A.6.1 Thin Gauge Sheet Metal....3A-4

3A.6.2 Cold Formed Steel Shapes....3A-4

3A.6.3 Structural Steel Shapes....3A-4

3A.6.4 Steel Bolts....3A-4

3A.6.5 Anchor Bolts....3A-5

3A.6.6 Welds....3A-5

3A.7 References 3A-5

ACRONYMS AND ABBREVIATIONS

AISC	American Institute of Steel Construction
AISI	American Iron and Steel Institute
ANSI	American National Standards Institute
ASTM	American Society for Testing and Materials
AWS	American Welding Society
FIRS	foundation input response spectra
GMRS	ground motion response spectra
HVAC	heating, ventilation, and air conditioning
SMACNA	Sheet Metal and Air Conditioning Contractors National Association
SSC	structure, system, and component
SSE	safe-shutdown earthquake

3A Heating, Ventilation, and Air Conditioning Ducts and Duct Supports

3A.1 Description

This appendix provides the methodology to qualify the structural integrity of seismic category I and seismic category II heating, ventilating, and air conditioning (HVAC) ducts and duct supports. Seismic qualification of other accessories of the HVAC system such as duct dampers, filters, fans, and heaters are part of seismic and dynamic qualification of equipment discussed in Section 3.10 and not discussed within this Appendix. Accessory loads to the duct and duct supports, however, are considered in the qualification of the duct and duct supports.

Schedule round pipe used as ductwork is outside the scope of this Appendix, and is designed in accordance with applicable piping and pipe support criteria.

In general, the design of ductwork and supports is accomplished through the following steps:

- Determine all shears, moments, and torques at critical sections of duct and supports caused by design dead, seismic, thermal, pressure, flow, vibration, and other loads, as applicable.
- Determine applicable load combinations and corresponding allowable stresses for ductwork and supports.
- Assure that maximum stresses are within allowable stresses corresponding to the applicable load combination.
- Qualify local stresses in ductwork at un-reinforced and reinforced openings.

When duct runs (synonymous with “duct subsystem”) change from seismic category I to seismic category II segments, the first two duct supports within the seismic category II boundary are designed as rigid supports capable of resisting seismic category I loadings.

Non-seismic HVAC duct and duct supports exist in non-seismic structures and as designated by system descriptions. It is not necessary for non-seismic duct and duct supports to satisfy the requirements of this appendix.

3A.1.1 Seismic Category I Ductwork

Seismic category I ductwork is designed for all applicable load combinations to maintain its structural integrity and flow capacity within specified stress limits and operability requirements. This is achieved by designing the ductwork (plate, stiffeners, fasteners, etc.) and limiting duct support spacing to maintain stresses to acceptably low levels. The seismic qualification of HVAC ducts and duct supports is to satisfy the safe-shutdown earthquake (SSE) requirements of the structure in which they are contained. Seismic category I ducts and duct supports, including support anchorages, in the US-APWR, standard plant seismic category I structures are analyzed and designed for a SSE which is equivalent to the in-structure response spectra developed from the certified seismic design response spectra. Site-specific seismic category I structures are analyzed and designed using as a minimum the site-specific SSE developed from the site-specific ground motion response spectra (GMRS) and foundation input response spectra (FIRS).

Typically stress criteria for ductwork and supports results in selection of standard member sizes and maximum span lengths. However, some HVAC systems require a high degree of leak tightness, experience excessive pressures, or need to account for other external influences (such as tornados) that can require thicker members or closer support spacing. Pressures due to flow velocity are based on the operability requirements of each HVAC system.

3A.1.2 Seismic Category II Ductwork

Seismic category II ductwork is not essential for the safe shutdown of the plant and need not remain functional during, and after, a SSE. However, such ductwork and supports must not fall or displace excessively where it could damage any seismic category I structures, systems, and components (SSCs). Seismic category II ductwork and supports, including support anchorages, are therefore analyzed and designed using the same methods and stress limits specified for seismic category I structures and subsystems, except structural steel in-plane stress limits are permitted to reach 1.0 F_y.

3A.2 Applicable Codes, Standards and Specifications

Sheet metal ducts are constructed in accordance with the American National Standards Institute (ANSI)/Sheet Metal and Air Conditioning Contractors National Association (SMACNA), HVAC Duct Construction Standards – Metal and Flexible (Reference 3A-1). The American Iron and Steel Institute (AISI), Specification for the Design of Cold-Formed Steel Members (Reference 3A-2), provides the methodology for evaluating the effects of shear lag and plate buckling appropriate for this type of duct construction. Structural steel duct supports are designed and constructed in accordance with the American Institute of Steel Construction (AISC) Specification for the Design, Fabrication and Erection of Steel Safety Related Structures for Nuclear Facilities (Reference 3A-3).

Schedule round pipe used as ductwork is not discussed within this Appendix. Codes, standards, and specifications applicable to schedule pipe is in accordance with piping and pipe support criteria in Sections 3.9 and 3.12.

3A.3 Loads and Load Combinations

3A.3.1 Loads

Supports are designed for dead, seismic, thermal loads, and airflow forces at duct elbows, as applicable. Ducts are also designed for the operational and accident pressure loads. Construction live load is considered, however, it is not present during design seismic events. In addition, any accessory loads to the duct or supports are included in the qualification of the duct and duct supports.

3A.3.2 Load Combinations

Refer to subsection 3.8.4.3 for various load combinations applicable to seismic category I SSCs.

Seismic category II ducts and duct supports are to be qualified for the applicable SSE to assure that they do not damage any seismic category I SSCs by falling or displacing excessively under any seismic loads. Seismic category II duct supports are, therefore,

qualified for the maximum seismic load combinations and associated allowable stresses as discussed in Subsection 3.8.4.3.

3A.4 Design and Analysis Procedures

Refer to Section 3.7 for seismic system analysis and qualification requirements of seismic category I and seismic category II SSCs and their supports.

3A.4.1 Simplified Design Approach

The duct and duct support designs can be simplified and performed separately. A simplified analysis is applicable when the seismic accelerations are taken as 1.5 times peak of the support attachment spectrum and the system is isolated from any rod hung seismic category II duct.

3A.4.2 Detailed Design Approach

For certain geometric and stiffness conditions, the seismic forces are more accurately analyzed for a duct subsystem, including supports. This approach is considered when (a) the duct run is 3-dimensional, (b) the duct run contains a wye fitting, (c) the duct run contains a branch tee fitting with dimensions within 6 inches of the main duct, (d) the duct run is not isolated from a rod hung category II duct, or (e) the duct and/or supports cannot be qualified using standard designs.

The detailed design approach utilizes an analytical model consisting of a duct run with multiple support points that also account for axial and lateral bracing. The subsystem is analyzed using the response spectrum analysis method for applicable operating and seismic loads, including any accessories and eccentricities that are present.

3A.4.3 Axial Brace Spacing

Axial bracing resist loads in the axial direction of a duct run. Axial braces are strategically located near directional changes in the duct run to avoid adverse load distribution due to axial effects. As a general rule, axial braces are spaced at intervals less than 50 feet for straight horizontal runs and less than 25 feet for straight vertical runs. A lateral brace on one leg of a 90-degree elbow bend can serve jointly as an axial brace to the other leg of the bend when the axial load is appropriately distributed.

3A.4.4 Lateral Brace Spacing

Lateral bracing resist loads perpendicular to the axial direction of a duct run. The lateral directions for design correspond to the two principal axes of bending for the duct cross-section. For horizontal runs, one lateral direction is horizontal, the other is vertical. For vertical runs, both lateral directions are horizontal.

In determining the placement of braces, a wall (or floor) penetration is not considered a point of lateral support except as specifically designed on a case-by-case basis and shown to have the capacity to provide support. The spacing of lateral braces is based on level of stress in the duct.

3A.5 Structural Acceptance Criteria

3A.5.1 Allowable Stresses

Allowable stress coefficients are applied in accordance with basic allowables of AISC or AISI. Refer to Subsection 3.8.4.5 for a combination of appropriate allowable stresses with the appropriate load combinations and material specifications.

3A.5.2 Deflection Limitations

Seismic category I ducts and duct supports satisfy deflection limits intended to control interface loads and flexible connector requirements. Where flexible connectors are not possible, attached accessories or commodities are designed for these deflections to prevent excessive interaction with the duct or duct support.

No specific requirements for seismic category II duct and duct supports are necessary. These components are designed not to fall during a seismic event. However, displacements are limited to prevent potential adverse interactions with adjacent commodities. Refer to Subsection 3.7.2.8 for criteria relating to seismic interaction of non-category I structures with seismic category I structures.

When HVAC ducts cross between adjacent buildings, the potential for differential movements is accommodated through flexible connectors. Differential displacements caused by seismic motion are obtained at the duct elevation using seismic analysis reports for each building.

3A.6 Materials

The principal materials for fabrication of HVAC ducts and duct supports are thin gauge sheet metal, cold formed steel shapes, and structural steel shapes.

3A.6.1 Thin Gauge Sheet Metal

Sheet metal ducts are welded constructed in accordance with ANSI/SMACNA (Reference 3A-1). The AISI (Reference 3A-2) provides an appropriate methodology for evaluating this type of duct construction.

3A.6.2 Cold Formed Steel Shapes

Cold formed steel shapes that may be used as support members satisfy the requirements specified in Reference 3A-2.

3A.6.3 Structural Steel Shapes

The design, fabrication, and installation of structural steel supports, and structural shapes and plates used in duct construction, complies with AISC (Reference 3A-3).

3A.6.4 Steel Bolts

Bolts of American Society for Testing and Materials (ASTM) A307 Type A (Reference 3A-4) with lockwashers are used for ductwork fit-up and support connections.

3A.6.5 Anchor Bolts

Anchor bolts are ASTM A307 (Reference 3A-4) or F1554 (Reference 3A-5), 36 x 1,000 pounds per square inch yield strength material. Higher strength F1554 material is used, as necessary, and noted on the design drawings. The flexibility of base plates is considered in determining the anchor bolt loads when expansion anchors are used for supports.

3A.6.6 Welds

Welding electrodes is minimum American Welding Society (AWS) E70 (References 3A-6, and 3A-7) for structural steel, and AWS E60 for sheet steel (less than or equal to 3/16th inch thick).

3A.7 References

3A-1 HVAC Duct Construction Standards – Metal and Flexible. American National Standards Institute/Sheet Metal and Air Conditioning Contractors National Association, 1995.

3A-2 North American Specification for the Design of Cold-Formed Steel structural Members. 2001 Edition and 2004 Supplement, American Iron and Steel Institute, 2001.

3A-3 Specification for the Design, Fabrication and Erection of Steel Safety Related Structures for Nuclear Facilities. AISC-N690-1994, 1994 and Supplement 2, American Institute of Steel Construction, 1994.

3A-4 Standard Specification for Carbon Steel Bolts and Studs, 60 000 PSI Tensile Strength. ASTM A307-04E1, American Society for Testing and Materials, 2004.

3A-5 Standard Specification for Anchor Bolts, Steel, 36, 55, and 105-ksi Yield Strength. ASTM F1554-04E1, American Society for Testing and Materials, 2004.

3A-6 Structural Welding Code – Steel. AWS D1.1/D1.1M:2006, American Welding Society, 2006.

3A-7 Structural Welding Code – Sheet Steel. AWS D1.3/D1.3M:2007, American Welding Society, 2007.

APPENDIX 3B

BOUNDING ANALYSIS CURVE DEVELOPMENT FOR LEAK BEFORE BREAK EVALUATION OF HIGH-ENERGY PIPING FOR US-APWR

CONTENTS

Page

3B Bounding Analysis Curve Development for Leak Before Break Evaluation of High-Energy Piping for US-APWR

3B.1 Introduction 3B-1

3B.2 LBB Evaluation Method 3B-1

3B.2.1 Applicable Conditions of LBB Concept 3B-1

3B.2.2 LBB Evaluation Method 3B-2

3B.2.2.1 Leak Rate Estimation by Thermal-Hydraulics Model 3B-2

3B.2.2.2 Crack Opening Area Evaluation 3B-6

3B.2.2.3 Fracture Mechanics Analysis 3B-7

3B.3 LBB Evaluation for the US–APWR 3B-12

3B.3.1 Generation of BAC 3B-14

3B.3.1.1 BAC Methodology 3B-14

3B.3.2 LBB Evaluation Procedure of Piping System Using BAC 3B-16

3B.3.2.1 Preparation of the Piping Data 3B-16

3B.3.2.2 Confirmation of Applicability of BAC Diagram 3B-17

3B.3.2.3 Calculation of LBB Evaluation Points 3B-17

3B.3.2.4 Assessment of LBB Concept 3B-19

3B.3.4 BAC Setting for LBB Evaluation 3B-19

3B.5 References 3B-19

TABLES

Page

3B-1 Ramberg-Osgood Parameters at 550° F 3B-21

3B-2 List of BAC for LBB Evaluation.....3B-22

FIGURES

Page

Figure 3B-1 Applicable Ranges of SQUIRT (Figure 1-1 in Reference 3B-6) 3B-23

Figure 3B-2 Z- Factor of SMAW and SAW 3B-24

Figure 3B-3 J-T Methodology for Stability Evaluation (References 3B-1, 3B-16) 3B-25

Figure 3B-4 Combination Scheme of Tension and Bending (Reference 3B-16). 3B-26

Figure 3B-5 $(J\text{-}T)_{mat}$ Curve at 550° F (Reference 3B-16) 3B-27

Figure 3B-6 LBB Evaluation Procedure of the U.S. Plant 3B-28

Figure 3B-7 US-APWR BAC for Primary Loop Hot Leg (SA182F316)..... 3B-29

Figure 3B-8 US-APWR BAC for Primary Loop Hot Leg (SA182 F316LN) 3B-30

Figure 3B-9 US-APWR BAC for Primary Loop Cross Over Leg (SA182 F316) .. 3B-31

Figure 3B-10 US-APWR BAC for Primary Loop Cross Over Leg (SA182 F316LN)..... 3B-32

Figure 3B-11 US-APWR BAC for Surge Line..... 3B-33

Figure 3B-12 US–APWR BAC for Surge Line 3B-34

Figure 3B-13 US–APWR BAC for RHRS 3B-35

Figure 3B-14 US-APWR BAC for RHRS 3B-36

Figure 3B-15 US–APWR BAC for Accumulator System 3B-37

Figure 3B-16 US-APWR BAC for Pressurizer Spray Line..... 3B-38

Figure 3B-17 US-APWR BAC for Main Steam Line 3B-39

ACRONYMS AND ABBREVIATIONS

ASME	American Society of Mechanical Engineers
BAC	bounding analysis curves
CVCS	chemical and volume control system
EPRI	Electric Power Research Institute
GDC	General Design Criteria
JSME	Japan Society of Mechanical Engineers
LBB	leak-before-break
MSS	main steam system
PCCV	prestressed concrete containment vessel
RCPB	reactor coolant pressure boundary
RCS	reactor coolant system
SAW	submerged arc weld
SI	safety investigation system
SMAW	shielded metal arc weld
SRP	standard review plan
SSE	safe-shutdown earthquake
TIG	tungsten inert gas

3B Bounding Analysis Curve Development for Leak Before Break Evaluation of High-Energy Piping for US-APWR

3B.1 Introduction

Leak-before-break (LBB) evaluation of US-APWR piping follows the methodology in accordance with General Design Criteria (GDC) 4 of 10 Code of Federal Regulations of 50, Appendix A (Reference 3B-1), NUREG-0800, Standard Review Plan (SRP) 3.6.3, Rev. 1, (Reference 3B-2), and NUREG-1061, Volume 3 (Reference 3B-3). The evaluation follows the following steps.

- Evaluate potential failure mechanism
- Perform bounding analysis

This appendix provides the development of bounding analysis curves (BACs). In this appendix, prerequisite conditions for LBB, and basic concept and evaluation equations for accepting LBB concept are described. Methods used to generate BAC and LBB evaluation methods are presented. Last, the BACs of representative piping system are shown.

3B.2 LBB Evaluation Method

LBB evaluation of US-APWR is conducted in accordance with GDC 4 (Reference 3B-1), SRP 3.6.3 (Reference 3B-2) and NUREG-1061, Volume 3 (Reference 3B-3), referring to the LBB standard of the Japan Society of Mechanical Engineers (JSME) (Reference 3B-4).

3B.2.1 Applicable Conditions of LBB Concept

(1) Purpose of the LBB evaluation

The purpose of LBB evaluation is to demonstrate that a leak will be detected before the pipe breaks. In cases that the LBB concept is not acceptable, piping rupture is postulated (Subsection 3.6.2) and protections for the structures, systems, and components relating to safety issues are required.

(2) Applicability of the LBB concept

The LBB concept is applied to austenitic stainless steel piping comprising reactor coolant pressure boundary (RCPB) and carbon steel piping of the main steam system (MSS) inside the prestressed concrete containment vessel (PCCV).

(3) Postulated degradation and countermeasure

Fatigue damage is assumed, as required by SRP 3.6.3 (Reference 3.B-2), and the measures for prevention from assumed degradation, such as stress corrosion crack on austenitic stainless steel pipe and erosion/corrosion on carbon steel pipe, should be provided.

(4) Capability of leak detection instrumentation

For the LBB evaluation, leak detection instrumentation should be provided and controlled properly in the plant operation. In accordance with SRP 3.6.3 (Reference 3B-2), the leak rate for the LBB evaluation should be set at 10 times as large as the leak-detection capability of the instrument used.

(5) Postulated crack

A circumferential crack is assumed on the circumferential weld joint of the piping. Because the piping of US-APWR has no longitudinal weld joint, there is no need to postulate a longitudinal crack.

(6) Applied load

In the LBB evaluation, the load under normal operating condition is considered for the evaluation of the leak rate, while the maximum load due to a seismic event is considered for fracture mechanics analysis.

3B.2.2 LBB Evaluation Method

The following methods are used for the LBB evaluation:

(1) Estimation of leak rate on the basis of thermal hydraulics flow model

(2) Crack opening area at applied load

(3) Fracture mechanics analysis

3B.2.2.1 Leak Rate Estimation by Thermal-Hydraulics Model

Henry's two-phase flow model is used as the thermal hydraulics model (Reference 3B-5). The leak rate is estimated by the thermal hydraulics model using the leak rate analysis code SQUIRT1.1 (Reference 3B-6) and NUREG/CR-6004 (Reference 3B-7). In this code, the flow model of pressurized water (sub-cooled liquid) inside the crack is based on the critical flow model. The principal evaluation formulae incorporated in SQUIRT1.1 are shown below.

(1) Henry's two-phase flow model

$$\psi(G_c, p_c) = G_c^{\,2} - \frac{1}{\left[\dfrac{X_c v_{gc}}{\gamma_o p_c} - (v_{gc} - v_{Lc}) N \dfrac{dX_E}{dp}\right]} = 0 \qquad \text{(3B.2.2.1-1)}$$

$$\textit{subject} \quad \Omega(G_c, p_c) = p_c + \Delta p_e + \Delta p_a + \Delta p_f + \Delta p_k + \Delta p_{aa} - p_o = 0 \qquad \text{(3B.2.2.1-2)}$$

where

$\psi(G_c, p_c)$ = Henry's mass flux equation

G_c = Mass flux of fluid at crack exit plane

p_c = Absolute pressure of fluid at crack exit plane

$\Delta p_e, \Delta p_a, \Delta p_f, \Delta p_k$ *and* Δp_{aa} = Pressure loss (detailed later)

p	=	Internal pressure
p_o	=	Absolute pressure at entrance of crack plane
γ_o	=	Isotropic expansion coefficient
v_{gc} and v_{Lc}	=	Specific volumes of saturated vapor and liquid at crack exit plane
X_c and X_E	=	Non-equilibrium vapor generation rate and equilibrium fluid quality.

$$X_c = NX_E\left(1 - e^{\{-B(L/D_h - 12)\}}\right) \quad \text{(3B.2.2.1-3)}$$

$$X_E = \frac{S_o - S_{Lc}}{S_{gc} - S_{Lc}} \quad \text{(3B.2.2.1-4)}$$

N	=	Non-equilibrium parameter

$$N = \begin{cases} 20X_E & X_E < 0.05 \\ 1 & X_E \geq 0.05 \end{cases} \quad \text{(3B.2.2.1-5)}$$

L	=	Flow-path length
D_h	=	Hydraulic diameter
S_o	=	Entropy of liquid at entrance of crack plane pressure
S_{gc} and S_{Lc}	=	Entropy of saturated vapor and liquid at crack exit plane pressure
B	=	Constant 0.0523 (Henry estimated based on data) (Reference 3B-6).

The mass flux G_C expressed in Equation 3B.2.2.1-1 is calculated from the exit pressure P_c. The pressure is obtained from the pressure at the entrance plane, the pressure at the exit plane and the pressure balance of the pressure loss in Equation B2.2.2.1-2. Since the pressure loss depends on the flow rate, Equation 3B.2.2.1-1 and Equation 3B.2.2.1-2 becomes nonlinear equations. Therefore, unknown quantities G_C and p_c are converged using the Newton-Raphson iteration method.

(2) Pressure Loss

The following is considered as pressure loss:

a. Entrance pressure loss ΔP_e

$$\Delta P_e = \frac{G_o^{\,2} v_{Lo}}{2C_D^{\,2}} \quad \text{(3B.2.2.1-6)}$$

where

G_o = Mass flux of fluid at crack entrance plane

v_{Lo} = Specific volume of saturated liquid at average crack entrance pressure

C_D = Discharge coefficient

According to the instruction manual of SQUIRT (Reference 3B-6), the discharge coefficient C_D usually takes values ranging 0.62-0.95 depending on the crack size and the conditions of the entrance edges. C_D range in some literature (Reference 3B-8) is 0.6-0.95. C_D becomes reduced to about 0.6 in cases where the entrance edge is sharpened, and increased in cases where the ratio of the edge radius to the hydraulic diameter is enlarged. For a tight crack with a small opening area, 0.95 is recommended. However, when C_D is small, the flow rate is reduced, representing a conservative condition in the estimation of the leak rate.

b. Pressure loss due to friction ΔP_f

$$\Delta P_f = \left(f \frac{L}{D_h} \right) \frac{\overline{G}^2}{2} \left[(1 - \overline{X}) \overline{v}_L + \overline{X} \overline{v}_g \right] \tag{3B.2.2.1-7}$$

where

$\overline{G}$ = Average mass flux of fluid

$\overline{X}$ = Average fluid quality

$\overline{v}_L$ and $\overline{v}_g$ = Specific volumes of saturated vapor and liquid at average crack pressure

f = Friction factor

$$f = \left[C_1 \log\left(\frac{D_h}{\varepsilon} \right) + C_2 \right]^{-2} \tag{3B.2.2.1-8}$$

$$(C_1, C_2) = \begin{cases} (2.00, 1.14) & D_h/\varepsilon > 100 \\ (3.39, -0.866) & D_h/\varepsilon < 100 \end{cases}$$

ε = Surface roughness of flow path

The friction factor in the case of $D_h/\varepsilon > 100$ is based on the formula of the Nikuradse equation (Reference 3B-9) used in the JSME LBB standard as well as in the PICEP, Pipe Crack Evaluation Program Code (Reference 3B-10) developed by Electric Power Research Institute (EPRI). The friction factor in the case of $D_h/\varepsilon < 100$ is the experimental formula by H. John H. (et al.), (Reference 3B-11), which calculates the friction factor greater than that of Nikurasde if $D_h/\varepsilon < 30$. Therefore, John's estimates

smaller leak rates than that of Nikurasde because of the increased friction loss.

c. Phase change acceleration pressure loss ΔP_a

$$\Delta P_a = \overline{G}_T^{\,2}\left[(1-X_c)v_{Lc} + X_c v_{Lc} - v_{Lo}\right] \qquad \text{(3B.2.2.1-9)}$$

where

$\overline{G}_T$ = Average mass flux in two-phase region of crack flow.

d. Area change acceleration pressure loss ΔP_{aa}

$$\Delta P_{aa} = \frac{G_c^{\,2} v_{Lo}}{2}\left[\left(\frac{A_c}{A_i}\right)^2 - \left(\frac{A_c}{A_o}\right)^2\right] + \frac{G_c^{\,2}}{2}\left[(1-\overline{X})\overline{v}_{Lc} + \overline{X}\,\overline{v}_{Lc}\right]\left[1-\left(\frac{A_c}{A_i}\right)^2\right] \qquad \text{(3B.2.2.1-10)}$$

where

A_c = Cross-section flow area at crack exit plane

A_i = L/D_h = Cross-section flow area at plane where L/D_h=12

A_o = Cross-section flow area at crack entrance plane

e. Other pressure loss ΔP_k

The surface irregularities larger than the surface roughness of the crack plane can be calculated as a pressure loss due to bends and protrusions in the flow path. Because fatigue crack has usually flat surface, this pressure loss does not have to be considered.

(3) Evaluation Conditions at Estimating Leak Rate

Estimation is conducted under the following conditions:

a. Upper bound of hydraulic diameter D_h

Hydraulic diameter D_h should not exceed 1/15 of the wall thickness t ($t/15 > D_h$). As shown in Figure 3B-1, the thermal hydraulics model incorporated into the SQUIRT code (Reference 3B-6) has the limitation on application that the ratio of the flow-path length L to hydraulic diameter D_h, t/D_h should be equal to or less than 0.5, or else, greater than 15. As the length of the flow path is equivalent to the wall thickness, the range $t/D_h > 15$ is applicable for LBB evaluation; in other words, the hydraulic diameter D_h should not exceed 1/15 of the wall thickness t ($t/15 > D_h$).

b. Lower bound of hydraulic diameter D_h

As the friction factor is 1 or less, the ratio of the hydraulic diameter (D_h) to the surface roughness (ε), D_h/ε should be equal to or more than 3.65 based on Equation B2.2.2.1-8. Consequently, the evaluation is conducted to the extent defined by the hydraulic diameter $D_h > 3.65\varepsilon$.

c. Discharge coefficient C_D

Because leak rate estimation is more conservative when the discharge coefficient C_D is smaller for the calculation of the entrance pressure, the value of C_D is conservatively set at smaller value of 0.6.

d. Surface roughness ε

The surface roughness ε used for the calculation of friction factor in Equation B2.2.2.1-8 depends on the degradation cause or the magnitude of stress. In the case of fatigue crack under normal operation, the roughness is estimated from 1 to 10 μm order. The greater the surface roughness is, the less is the leak rate.

The instruction manual of SQUIRT (Reference 3B-6) mentions the surface roughness of 33.655 μm of the fatigue crack of stainless steel and carbon steel by the Hitachi's experiment in the air environment (Reference 3B-7, 3B-12) and the average surface roughness of 40.513 μm of the thermal fatigue crack of carbon steel (References 3B-7, 3B-13). On the other hand, 30 μm is used in the JSME LBB standard (Reference 3B-4). In this document, ε equals 0.00161 inch (41 μm) is used for conservativeness.

3B.2.2.2 Crack Opening Area Evaluation

In order to estimate the crack opening area of the through-wall cracked pipe subjected to stress under normal operation, there are several procedures based on elastic or elastic-plastic fracture mechanics.

In this document, Tada and Paris' equations (References 3B-4 and 3B-14) are used. These are expressed by the following equations, which gives the crack opening area applying axial and bending load to the pipe with a circumferential through-wall crack.

$$A_{total} = A_m + A_b \qquad \text{(3B.2.2.2-1)}$$

$$A_m = \frac{P_m}{E}\left(\pi R^2\right) I_m(\theta)$$
$$A_b = \frac{P_b}{E}\left(\pi R^2\right) I_b(\theta) \qquad \text{(3B.2.2.2-2)}$$

where

E = Young's modulus

R = Pipe mean radius

θ = Half crack angle (rad) $(0<\theta<0.55\pi)$

P_m = Nominal membrane stress due to axial force

P_b = Bending stress due to bending moment

A_m = Crack opening area due to axial force

A_b = Crack opening area due bending moment

S_f = Flow stress

I_m and I_b = Non dimensional quantity where plastic zone at crack tip is taken into account.

Calculated by substitution of θ_{eff} shown in the following equations

$$I_m(\theta_{eff}) = 2\theta^2\left[1+\left(\frac{\theta_{eff}}{\pi}\right)^{\frac{3}{2}}\left\{8.6-13.3\left(\frac{\theta_{eff}}{\pi}\right)+24\left(\frac{\theta_{eff}}{\pi}\right)^2\right\}\right.$$
$$\left.+\left(\frac{\theta_{eff}}{\pi}\right)^3\left\{22.5-75\left(\frac{\theta_{eff}}{\pi}\right)+205.7\left(\frac{\theta_{eff}}{\pi}\right)^2-247.5\left(\frac{\theta_{eff}}{\pi}\right)^3+242\left(\frac{\theta_{eff}}{\pi}\right)^4\right\}\right] \quad \text{(3B.2.2.2-3)}$$

$$I_b(\theta_{eff}) = 2\theta^2\left[1+\left(\frac{\theta_{eff}}{\pi}\right)^{\frac{3}{2}}\left\{8.2-12.7\left(\frac{\theta_{eff}}{\pi}\right)+19.3\left(\frac{\theta_{eff}}{\pi}\right)^2\right\}\right.$$
$$\left.+\left(\frac{\theta_{eff}}{\pi}\right)^3\left\{20.4-68\left(\frac{\theta_{eff}}{\pi}\right)+165.2\left(\frac{\theta_{eff}}{\pi}\right)^2-187.2\left(\frac{\theta_{eff}}{\pi}\right)^3+146.7\left(\frac{\theta_{eff}}{\pi}\right)^4\right\}\right] \quad \text{(3B.2.2.2-4)}$$

θ_{eff} = Crack half angle under consideration of plastic zone

$$\theta_{eff} = \theta + \frac{(K_m + K_b)^2}{2\pi R S_f{}^2} \quad \text{(3B.2.2.2-5)}$$

$$K_m = P_m\sqrt{\pi(R\theta)}\,F_m(\theta) \quad \text{(3B.2.2.2-6)}$$

$$K_b = P_b\sqrt{\pi(R\theta)}\,F_b(\theta) \quad \text{(3B.2.2.2-7)}$$

$$F_m(\theta) = 1+7.5\left(\frac{\theta}{\pi}\right)^{\frac{3}{2}}-15\left(\frac{\theta}{\pi}\right)^{\frac{5}{2}}+33\left(\frac{\theta}{\pi}\right)^{\frac{7}{2}} \quad \text{(3B.2.2.2-8)}$$

$$F_b(\theta) = 1+6.8\left(\frac{\theta}{\pi}\right)^{\frac{3}{2}}-13.6\left(\frac{\theta}{\pi}\right)^{\frac{5}{2}}+20\left(\frac{\theta}{\pi}\right)^{\frac{7}{2}} \quad \text{(3B.2.2.2-9)}$$

$(0 < \theta < 0.55\,\pi)$

3B.2.2.3 Fracture Mechanics Analysis

Because austenitic stainless steel has high fracture toughness, the limit load methodology can be applied to evaluate piping fracture behavior. On the other hand, in

the case of carbon steel, elastic plastic fracture mechanics should be applied for crack stability analysis due to relatively lower fracture toughness.

(1) Austenitic stainless steel

Modified limit load methodology (Reference 3B-2) is used for fracture mechanics analysis of austenitic stainless steel piping.

a. Relation between SI and L

$$SI = S_b + M \cdot P_m \quad \text{(3B.2.2.3-1)}$$

$$L = 2\theta R \quad \text{(3B.2.2.3-2)}$$

$$S_b = \frac{2\sigma_f}{\pi}\left(2\sin\beta - \sin\theta\right) \quad \text{(3B.2.2.3-3)}$$

$$\beta = \frac{1}{2}\left(\pi - \theta - \pi\frac{P_m}{\sigma_f}\right) \quad \text{(3B.2.2.3-4)}$$

$$if \quad \theta + \beta > \pi$$

$$S_b = 2\sigma_f\left(\sin\beta\right)/\pi \quad \text{(3B.2.2.3-5)}$$

$$\beta = -\pi\left(P_m/\sigma_f\right) \quad \text{(3B.2.2.3-6)}$$

where

SI = Stress index

P_m = Membrane stress

S_b = Bending stress

M = Margin:

1 in the case of absolute sum load combination method

1.4 in the case of algebraic sum method of load combination

L = Total crack length of a circumferential through-wall crack

θ = Half crack angle

R = Mean radius

β = Neutral angle

σ_f = Flow stress

b. σ_f and SI in the cases of base metal and tungsten inert gas (TIG) weld

$$SI = M\left(P_b + P_m\right) \quad \text{(3B.2.2.3-7)}$$

$$\sigma_f = \left(\sigma_y + \sigma_u\right)/2 \quad \text{(3B.2.2.3-8)}$$

where

P_b = Primary bending stress

σ_y = Yield stress

σ_u = Ultimate strength

In the case that σ_y and σ_u are unknown, the stress values from American Society of Mechanical Engineers (ASME) Code, Section II (Reference 3B-15) shall be used or the equations shown below shall be applied for definition of flow stress.

σ_f = 51 ksi, where $SI/17M < 2.5$

σ_f = 45 ksi, where $SI/17M \geq 2.5$

In this document, flow stress is determined by the following equation using the stress values S_y and S_u from ASME Code, Section II (Reference 3B-15) because this value is less than 51 ksi which is recommended in SRP 3.6.3.

$$\sigma_f = S_f = (S_y + S_u)/2$$

c. *SI* in the cases of shielded metal arc weld (*SMAW)* and submerged arc weld (*SAW*)

SI of *SMAW* and *SAW* is expressed in the following equations. *Z* factors of both welds are shown in Figure 3B-2.

$$SI = M(P_m + P_b + P_e)Z \quad \text{(3B.2.2.3-9)}$$

$$Z = 1.15[1.0 + 0.013(OD - 4)] \quad for\ SMAW \quad \text{(3B.2.2.3-10)}$$

$$Z = 1.30[1.0 + 0.010(OD - 4)] \quad for\ SAW \quad \text{(3B.2.2.3-11)}$$

where

P_e = Combined thermal expansion stress at normal operation

OD = Pipe outer diameter (inch)

Relations mentioned above are utilized as follows.

At the beginning, the relation curve between *SI* and *L* is drawn using Equations B2.2.2.3-1 through B2.2.2.3-6. Secondly, *SI* is obtained from Equations B2.2.2.3-7 through B2.2.2.3-11 depending on the weld processing, and the critical crack length is calculated by using the relation curve between *SI* and *L*. SRP 3.6.3 (Reference 3B-2) requires that the calculated critical crack length shall be more than twice as large as the critical detectable crack length.

(2) Carbon steel

J-T methodology is used for fracture mechanics analysis of the main steam pipe made of carbon steel.

J-T methodology is one of elastic-plastic fracture mechanics evaluation method. This is described in NUREG-1061 (Reference 3B-3) and in the Design Control Document (DCD) of Economic Simplified BWR (ESBWR) (Reference 3B-16). Critical load of instability is derived using J resistance (J-R) curve from materials

test and calculated J-integral for applied load. Tearing modulus T is obtained from the following equation.

$$T = \frac{E}{(\sigma_f)^2}\frac{dJ}{da} \qquad \text{(3B.2.2.3-12)}$$

where

E: Young's modulus

σ_f: flow stress

J: J-integral from J-R curve

a: crack length

Figure 3B-3 illustrates the J-T methodology for stability evaluation. (J-T)mat curve is derived from material property J-R curve. (J-T)app curve is drawn from calculated J-integral with crack length as a parameter and applied load (fixed value). An intersection point of the (J-T)mat curve and (J-T)app curve denotes the instability point. The critical load at instability can be determined from the J versus load curve with the certain crack extension at instability.

In this document J integral value for the applied load Japp is calculated using one of a simplified J calculation methods, EPRI estimation scheme by Kumar (Reference 3B-2, 3B-16 and 3B-17). This method gives the estimation formulas of J-integral for a pipe with a circumferential through-wall crack subjected to pure tension or pure bending by approximating stress-strain curve using Ramberg-Osgood relation.

1) Tension

$$\begin{aligned} J_m &= (J_e + J_p)_m \\ J_e &= K_m{}^2/E \\ J_p &= \alpha\sigma_0\varepsilon_0 c h_m (P/P_0)^{n+1} \\ P_0 &= 2\sigma_0 R t\left[\pi - \theta - 2\sin^{-1}(0.5\sin\theta)\right] \end{aligned} \qquad \text{(3B.2.2.3-13)}$$

2) Bending

$$\begin{aligned} J_b &= (J_e + J_p)_b \\ J_e &= K_b{}^2/E \\ J_p &= \alpha\sigma_0\varepsilon_0 c h_b (M/M_0)^{n+1} \\ M_0 &= 4\sigma_0 R^2 t\left[\cos(\theta/2) - 0.5\sin\theta\right] \end{aligned} \qquad \text{(3B.2.2.3-14)}$$

where

J_e = elastic component of *J*-integral

J_p = plastic component of *J*-integral

K = stress intensity factor

E = Young's modulus

θ = crack half angle

R = pipe mean radius

t = thickness

P = axial load

M = bending moment

α, n, ε_0, *and* σ_0 = parameters in Ramberg-Osgood stress-strain relation

$$(\varepsilon/\varepsilon_0) = (\sigma/\sigma_0) + \alpha(\sigma/\sigma_0)^n$$

h_m *and* h_b = coefficients for axial load and bending moment

2c = is the remaining circumferential ligament of the cracked portion of the pipe

where, *T* is expressed as a difference equation, Equation B2.2.2.3-12 changes as follows:

$$T = \frac{E}{(\sigma_f)^2}\frac{dJ}{da} = \frac{E}{(\sigma_f)^2}\frac{\Delta J}{\Delta a} \qquad \text{(3B.2.2.3-15)}$$

Reference 3B-16 describes that the application of linear interaction rule is conservative when the instability load is close to the limit load. Then using both of the critical crack lengths for pure tensile load or bending moment, the critical crack length for a combination of tensile load and bending moment and instability bending stress in the presence of membrane stress are as follows (Figure 3B-4, Reference 3B-16):

$$a_c = \frac{\sigma_t}{(\sigma_t + \sigma_b)} a_{c,t} + \frac{\sigma_b}{(\sigma_t + \sigma_b)} a_{c,b} \qquad \text{(3B.2.2.3-16)}$$

$$S_b = \left(1 - \frac{\sigma_t}{\sigma_t'}\right)\sigma_b' \qquad \text{(3B.2.2.3-17)}$$

where

a_c = critical crack length in a combination of tension and bending

σ_t = applied membrane stress

σ_b = applied bending stress

$a_{c,t}$ = critical crack length for a tension stress of $\sigma_t + \sigma_b$

$a_{c,b}$ = critical crack length for a bending stress of $\sigma_t + \sigma_b$

S_b = instability bending stress for crack length *a* in the presence of membrane stress

σ_t' = instability tension stress for crack length *a*

σ_b' = instability bending stress for crack length *a*

In the case of loading control condition, lower stress-strain curve gives larger applied *J* (J_{APP}). On the other hand generally larger strength material has lower fracture toughness. This relation suites base metal and weld metal of carbon steel. Therefore, in the evaluation, stress-strain curve of the base metal and the J-R curve of the weld metal are applied for conservativeness.

Material of the main steam pipe is planned as SA333 Gr.6. The material data is to be obtained from the same material to be used, but has not been produced yet. Then, those of SA333 Gr.6 in the DCD of ESBWR are tentatively used. The Ramberg-Osgood parameters at 550° F are shown in Table 3B-1 (Reference 3B-16). Also $(J\text{-}T)_{mat}$ curve from J-R curve of weld metal at 550° F is shown in Figure 3B-5 (Reference 3B-16). Evaluation of the main steam line is performed using these data.

3B.3 LBB Evaluation for the US–APWR

The LBB evaluation method applied in the United States is briefly described below according to SRP 3.6.3 (Reference 3B-2).

In the LBB concept, it is necessary to detect a leak at normal operation to prevent the piping system from failure at the postulated maximum load. Therefore, both the stress under normal operation and the maximum load are required for evaluation.

(1) Applied load

a. Load under normal operation

The evaluation of crack opening area for the estimation of the leak rate is conducted using the stress under normal operation. The load is produced by the internal pressure, dead weight, and thermal expansion.

$$F = F_{DW} + F_{Th} + F_P \tag{3B.3-1}$$

$$M = \sqrt{\left((M_X)^2 + (M_Y)^2 + (M_Z)^2\right)} \tag{3B.3-2}$$

$$M_X = (M_X)_{DW} + (M_X)_{Th}$$

$$M_Y = (M_Y)_{DW} + (M_Y)_{Th}$$

$$M_Z = (M_Z)_{DW} + (M_Z)_{Th}$$

where

F = Axial force

M = Bending moment

The subscripts indicate the following loads

DW = Dead weight

Th = Thermal expansion

P = Internal pressure

x,y,z = Component of x, y, and z direction.

b. The maximum applied load

In order to assess the LBB, it is needed to assure that no failure of the cracked structure occurs when the postulated maximum load is applied. Loads considered are pressure, deadweight, and thermal load under normal operation, plus seismic loads.

The margin for the load is set at 1.0 in the case of absolute sum and 1.4 in the case of algebraic. For US-APWR, the load for evaluation is calculated by the absolute sum of the components and the margin is set at 1.0.

In the case of *SMAW* or *SAW*, the stress derived from Equations B2.2.3-3 and 2.3-4 must be multiplied by Z factor from Equations B2.2.2.3-10 or B2.2.2.3-11.

$$|F| = |F_{DW}| + |F_{Th}| + |F_P| + |F_{SSE}| + |F_{SAM}| \tag{3B.3-3}$$

$$|M| = \sqrt{\left((M_X)^2 + (M_Y)^2 + (M_Z)^2\right)} \tag{3B.3-4}$$

$$M_X = |(M_X)_{DW}| + |(M_X)_{Th}| + |(M_X)_{SSE}| + |(M_X)_{SAM}|$$

$$M_Y = |(M_Y)_{DW}| + |(M_Y)_{Th}| + |(M_Y)_{SSE}| + |(M_Y)_{SAM}|$$

$$M_Z = |(M_Z)_{DW}| + |(M_Z)_{Th}| + |(M_Z)_{SSE}| + |(M_Z)_{SAM}|$$

where, subscripts indicate the following loads.

SSE = Inertia load due to safe-shutdown earthquake (SSE)

SAM = Seismic anchor motion load due to SSE

(2) Safety factor

The safety factors required for the LBB evaluation of the US-APWR by the Reference 3B-2 are associated with the following items.

i. Leak rate ten times as large as detectable leak rate

ii. Critical crack length/leakage crack length ≧ 2

iii. Safety factor for the maximum load = 1 for absolute sum
1.4 for algebraic sum

The leak detection system for US-APWR is designed to detect a leak rate of 1 gpm. Consequently, the leak rate for the LBB evaluation is 10 gpm based on Item i mentioned above. The applied load is evaluated by absolute sum; therefore, the safety factor of 1.0 is used for the maximum load.

LBB evaluation procedure to satisfy the above three safety factors is shown in Figure 3B-6. The procedure is as follows:

a. Obtain the crack opening area corresponding to the applied loads under normal operation.

b. Calculate leakage crack length L_L from the crack opening area, the leak rate ten times as large as the detectable leak rate and the leak rate based on thermal hydraulics model.

c. Calculate the critical crack length L_C from the fracture mechanics analysis of the applied load under the maximum load condition.

d. If the critical crack length L_C is twice as large as or larger than the leakage crack length L_L, restraint is unnecessary because the leak is detectable before pipe rupture.

3B.3.1 Generation of BAC

3B.3.1.1 BAC Methodology

The BAC methodology is an LBB assessment diagram (Reference. 3B-3) used to satisfy the three safety factors identified in the previous section. In the BAC diagram, $\sigma_{nor}=P_m + P_b$, the sum of the membrane stress and the bending stress under normal operation is plotted along the abscissa, and $|\sigma_{max}| = |P_{m_max}| + |P_{b_max}|$, the absolute sum of the membrane stress and the bending stress under the maximum load is plotted along the ordinate. The plotting procedure on the diagram is as follows.

Item 1 Determine the leakage crack length with a leak rate 10 times as large as the detectable leak rate by applying abscissa's stress $\sigma_{nor} = P_m + P_b$.

Item 2 Calculate the critical crack length as twice as long as the leakage crack length obtained from item 1

Item 3 Obtain the critical maximum stress $|\sigma_{max}|$ by performing fracture mechanics analysis focused on the critical crack length.

Item 4 Draw the lines by connecting the plots on the diagram

The area below the BAC is a leak mode and that beyond the BAC is a failure mode.

In the LBB evaluation of US-APWR, the BAC is drawn by the following manner. The minimum point A of Case-1 and the maximum point B of Case-2 are determined. The six points along the abscissa are chosen by equal division between point A and B, and then the critical maximum stresses are calculated. The BAC is drawn by connecting these points. The more detailed procedure is shown below.

Case 1 The minimum normal stress case

(1) Calculate the membrane stress P_m due to the internal pressure under normal operation.

(2) Set $P_b = 0$ for bending stress (in case of J-T methodology, set $P_b = 1$)

(3) Calculate the crack length '*a*' at leak rate 10 times as large as the detectable leak rate under the loads of (1) and (2)

(4) Obtain the critical maximum stress $|\sigma_{max}|$ for '2*a*', twice as long as the crack length of (3)

(5) Plot the stress P_m due to internal pressure along the abscissa and plot critical maximum stress $|\sigma_{max}|$ along the ordinate

Case 2 The maximum normal stress case

(1) Set the membrane stress P_m due to the internal pressure under normal operation

(2) Define flow stress S_f as critical maximum stress (in case of J-T methodology, choose the allowable maximum value).

(3) Calculate the critical crack length '2*b*' applying S_f

(4) Obtain stress $P_m + P_b$ which makes leak rate ten times as large as the detectable leak rate with crack length b and parameter of bending stress P_b.

(5) Plot the stress $\sigma_{nor} = P_m + P_b$ obtained in item 3 along the abscissa and plot the flow stress S_f obtained in (3) along the ordinate.

Case 3-1 through 3-5 (Intermediate points)

(1) Calculate the membrane stress P_m due to the internal pressure under normal operation

(2) Set the bending stress P_b by equally spacing the interval between the minimum point and the maximum point of bending stress under normal operation.

(3) Calculate the crack length '*a*' representing a leak rate ten times as large as the detectable leak rate under the load of (1) and (2).

(4) Obtain the critical maximum stress $|\sigma_{max}|$ for '2*a*', twice the crack length of item 3.

(5) Plot $\sigma_{nor} = P_m + P_b$ along the abscissa and plot the critical maximum stress $|\sigma_{max}|$ along the ordinate

The points of Case-1 and Case-2 occasionally may deviate from the applicable range of the evaluation. In such a case, the optimum values satisfying the following conditions are adopted.

(1) Limitations due to the applicable range of hydraulics model should be satisfied.

(2) The bending stress for assessment of facture mechanics analysis exceeds zero.

(3) In case that the maximum normal stress case exceeds 50 ksi, it should be set at 50 ksi.

Since flaw stress of the stainless steel focused on this document is within 45-47 ksi and the stress in the operation does not exceed the flaw stress, the maximum value of the normal operation is set at 50 ksi.

3B.3.2 LBB Evaluation Procedure of Piping System Using BAC

3B.3.2.1 Preparation of the Piping Data

Accumulate the following information before starting LBB evaluation.

a. Postulated degradation of the focused piping system and the countermeasures
b. Piping outer diameter and thickness and pipe material
c. Temperature and inner pressure under normal operation in the piping system
d. Minimum wall thickness at the weld counterbore
e. Welding procedure applied to the piping system
f. Material property
    1. Stainless piping: Yield stress, tensile strength at temperature
    2. Carbon steel piping: Stress-strain curves of the base metal at temperature and J-R curves of weld metal
g. Load applied under normal operation (internal pressure, deadweight, and thermal expansion)

h. Load applied to the most severe portions (involving internal pressure, deadweight, thermal expansion, and earthquakes)

3B.3.2.2 Confirmation of Applicability of BAC Diagram

a. Confirm the applicability of the LBB concept to fatigue crack; that is, measures for other than fatigue damage have been already considered.
b. Confirm that input conditions such as the material, temperature and internal pressure under normal operation used for producing the BAC agree with those of the LBB assessment.
c. Verify that the minimum wall thickness is thinner than the wall thickness at producing the BAC.
d. Verify that the material constants used for producing the BAC are more conservative than those of the operational plant.

3B.3.2.3 Calculation of LBB Evaluation Points

The stress under normal operation along the abscissa and the stress under the maximum load along the ordinate should be calculated.

a. Calculation of the stress along the abscissa under normal operation

1) Calculate the algebraic sum of the axial force, the bending and torque moment due to deadweight, the internal pressure, and the thermal expansion.

$$F = F_{DW} + F_{Th} + F_P$$

$$M = \sqrt{\left((M_X)^2 + (M_Y)^2 + (M_Z)^2\right)}$$

$$M_X = (M_X)_{DW} + (M_X)_{Th}$$

$$M_Y = (M_Y)_{DW} + (M_Y)_{Th}$$

$$M_Z = (M_Z)_{DW} + (M_Z)_{Th}$$

where

F = Axial force

M = Bending moment

Subscripts indicate the loads shown below

DW = Deadweight

Th = Thermal expansion

P = Internal pressure

x, y and *z* = Component of x, y and z direction.

2) Calculate the cross sectional area *A* and the section modulus *Z* assuming the minimum wall thickness.

3) Calculate the stress σ_{nor} at the evaluating point under normal operation.

$$\sigma_{nor} = P_m + P_b = F/A + M/Z$$

b. Calculation of the maximum stress under the maximum load along the ordinate

1) Calculate the absolute sum of the axial force, the bending and torque moment due to deadweight, the internal pressure, the thermal expansion, and earthquake using the following equations.

$$|F| = |F_{DW}| + |F_{Th}| + |F_P| + |F_{SSE}| + |F_{SAM}|$$
$$|M| = \sqrt{\left((\mathrm{M_X})^2 + (\mathrm{M_Y})^2 + (\mathrm{M_Z})^2\right)}$$
$$M_X = |(M_X)_{DW}| + |(M_X)_{Th}| + |(M_X)_{SSE}| + |(M_X)_{SAM}|$$
$$M_Y = |(M_Y)_{DW}| + |(M_Y)_{Th}| + |(M_Y)_{SSE}| + |(M_Y)_{SAM}|$$
$$M_Z = |(M_Z)_{DW}| + |(M_Z)_{Th}| + |(M_Z)_{SSE}| + |(M_Z)_{SAM}|$$

where subscripts indicate the following loads.

SSE = Inertia load due to SSE

SAM = Seismic anchor motion load due to SSE.

2) Calculate stress under the maximum load $|\sigma_{max}|$ at the relevant points considering *Z*- factor of the welded joint.

$$|\sigma_{\max}| = |P_{m_\max}| + |P_{b_\max}| = \left(|F|/A + |M|/Z\right) \cdot Z_z$$

where

Z_z = *Z*- factor

= 1 for base material or TIG welding of stainless steel piping and carbon steel piping

= 1.15[1.0+0.013 (*OD*-4)] for *SMAW*

= 1.30[1.0+0.010 (*OD*-4)] for *SAW*

OD = Pipe outer diameter (inch).

3B.3.2.4 Assessment of LBB Concept

1) Assessing point (σ_{nor},$|\sigma_{max}|$) is plotted on the BAC diagram

2) If the assessing point falls below the BAC, the detection of leakage before rupture is possible and then the LBB concept can be applied.

When specifically conducting LBB evaluation on the US-APWR utilizing the BAC diagrams, the following attention should be paid.

a. Wall thickness setting

The BAC is based on the nominal wall thickness and not the minimum wall thickness. The nominal wall thickness provides conservative results, since the greater the wall thickness, the less chance of leakage.

On the other hand, in the LBB assessment, the evaluation should be conducted utilizing the minimum wall thickness, since the thinner the wall is, the greater the calculated stress under the applied load becomes; thereby, a conservative situation.

b. *Z*- factor for the assessment of weld joint

The applied load stress incremental factor Z_Z is set to 1.0, because the material is assumed as base metal in drawing the BAC included in this Appendix.

In the case of *SMAW* and *SAW*, the maximum load should be multiplied by the *Z*-factor because the fracture toughness value is lowered compared to the base metal or TIG welding.

3B.3.4 BAC Setting for LBB Evaluation

Table 3B-2 lists the piping system selected for setting the BAC. The detailed BACs are shown in Figures 3B-7 through Figure 3B-17.

3B.5 References

3B-1 General Design Criteria for Nuclear Power Plants, Domestic Licensing of Production and Utilization Facilities, Energy. Title 10, Code of Federal Regulation, Part 50, Appendix A, U.S. Nuclear Regulatory Commission, Washington, D.C.

3B-2 Leak-Before-Break Evaluation Procedures, Design of Structures, Components, Equipment, and Systems, Standard Review Plan for the Review of Safety Analysis Reports for Nuclear Power Plants. NUREG-0800, Standard Review Plan 3.6.3, Rev.1, U.S. Nuclear Regulatory Commission, Washington, DC, March 2007.

3B-3 Evaluation of Potential for Pipe Breaks, Report of U.S. NRC Piping Review Committee. NUREG-1061, Vol.3, U.S. Nuclear Regulatory Commission, Washington, DC, 1984.

3B-4 Codes for Nuclear Power Generation Facilities – Rules on Protection Design against Postulated Pipe Rupture for Nuclear Power Plants, Japan Society of Mechanical Engineers, S ND1-2002.

3B-5 Robert E. Henry, The Two-Phase Critical Discharge of Initially Saturated or Subcooled Liquid. Nuclear Science and Engineering, Vol. 41, pp.336-342, 1970.

3B-6 SQUIRT 1.1 Code System to Predict Leak rate and Area of Crack Opening for Cracked Pipes in Nuclear Power Plants, PSR-533, ORNL Radiation Safety Information Computational Center, 2006.

3B-7 Probabilistic Pipe Fracture Evaluations for Leak-Rate-Detection Applications. NUREG/CR-6004, U.S. Nuclear Regulatory Commission, 1995.

3B-8 Measurement of Fluid Flow by Means of Orifice Plates, Nozzles and Venturi Tubes Inserted in Circular Cross-Section Conduits Running Full. JIS Z 8762,1995.

3B-9 Nikuradse, J., Turbulente Strornung in Nicht Kreistformigen Rohren, Ing. Arch., Vol. a, pp. 306-322, 1930.

3B-10 PICEP: Pipe Crack Evaluation Program. NP-3596-SR, Rev.1, Electric Power Research Institute, 1987.

3B-11 John, H., Reimann, J., Westphal, F., and Friedel, L., Critical Two-Phase Flow Through Rough Slits. J. Multiphase Flow, 1987.

3B-12 Matsumoto, K., Nakamura, S., Gotoh, N., Narabayashi, T., Tanaka, Y., and Horimizu, Y., Study on Coolant Leak Rates Through Pipe Cracks. ASME PVP Vol. 165, pp. 121-127, American Society of Mechanical Engineers, 1989.

3B-13 Goldberg, A. Streit, R. D., and Scott, R. G., Evaluation of Cracking in Feedwater Piping Adjacent to the Steam Generators on Nine Pressurized Water Reactor Plants. NUREG/CR-1603, U.S. Nuclear Regulatory Commission, Washington, DC, 1980.

3B-14 Hasegawa, K., Okamoto, A., Yokota, H., Yamamoto, Y., Shibata, K., Oshibe, T., and Matsumura, K., Crack Opening Area of Pressurized Pipe for Leak Before Break Evaluation. Japan Society of Mechanical Engineers A, Vol.55 No.514, pp.1269-1274, 1989.

3B-15 Part D Properties, ASME, Sec. II, Table Y-1, Table U, Table TM-1, and Table 2A, 2001 (Addenda 2003), American Society of Mechanical Engineers.

3B-16 ESBWR Design Control Document, 26A6642AL Rev.2, 2006.

3B-17 Ductile Fracture Handbook, NP-6301-D N14-1, EPRI.

Table 3B-1 Ramberg-Osgood Parameters at 550°F Material Constant

Material	Flow stress σ_f psi	Ramberg-Osgood parameters$(\varepsilon/\varepsilon_0)= (\sigma/\sigma_0)+\alpha(\sigma/\sigma_0)^n$				
		σ_0 psi	ε_0(-)	E psi	n	A
SA333Gr.6	52000*	34600**	0.001331 $= \sigma_0/E$	2.6×10^7**	5.0**	2.0**

*Note: p. 3E-8 of Reference 3B-16.

**Note: p. 3E-13 of Reference 3B-16.

Table 3B-2 List of BAC for LBB Evaluation

No.	System	Subsystem	Line No(s)	Nominal Diameter (Inches)	Outside Diameter (Inches)	Thickness (Inches)	Material	Temp (°F)	Pressure (psig)	Inside Pipe		BAC Figure No.
										Water	Vapor	
1	RCS	Primary Loop Hot Leg	31"ID-RCS-2501R A,B,C,D	31ID	37.12	3.06	SA182 F316	617	2235	X		Figure 3B-7
1	RCS	Primary Loop Hot Leg	31"ID-RCS-2501R A,B,C,D	31ID	37.12	3.06	SA182 F316LN	617	2235	X		Figure 3B-8
2	RCS	Primary Loop Crossover Leg	31"ID-RCS-2501R A,B,C,D	31ID	37.12	3.06	SA182 F316	550.6	2235	X		Figure 3B-9
3	RCS	Primary Loop Cold Leg	31"ID-RCS-2501R A,B,C,D	31ID	37.12	3.06	SA182 F316	550.6	2235	X		
2	RCS	Primary Loop Crossover Leg	31"ID-RCS-2501R A,B,C,D	31ID	37.12	3.06	SA182 F316LN	550.6	2235	X		Figure 3B-10
3	RCS	Primary Loop Cold Leg	31"ID-RCS-2501R A,B,C,D	31ID	37.12	3.06	SA182 F316LN	550.6	2235	X		
4	RCS	Surge Line	16"-RCS-2501R A	16	16	1.594	SA-312 TP316	653	2235	X		Figure 3B-11
5	RCS	Surge Line	16"-RCS-2501R A	16	16	1.594	SA-312 TP316	449	400	X		Figure 3B-12
6	RCS	Residual Heat Removal System (RHRS) Hot Leg Branch Line off RCS	10"-RCS-2501R A,B,C,D, Hot Leg Side	10	10.75	1.125	SA-312 TP316	617	2235	X		Figure 3B-13
7	RCS	RHRS Cold Leg Branch Line off RCS	8"- RCS -2501R A,B,C,D (COLD LEG)	8	8.625	0.906	SA-312 TP316	550.6	2235	X		Figure 3B-14
8	SIS	Accumulator System	14"-RCS-2501R A,B,C,D	14	14	1.406	SA-312 TP316	550.6	2235	X		Figure 3B-15
9	RCS	Pressurizer Spray Line	6"-RCS-2501R A,D	6	6.625	0.719	SA-312 TP316	550.6	2235	X		Figure 3B-16
10	MSS	Main Steam Line	32"-MSS-1532N A,B,C,D	32	32	1.496	SA333 Gr.6	535	907		X	Figure 3B-17

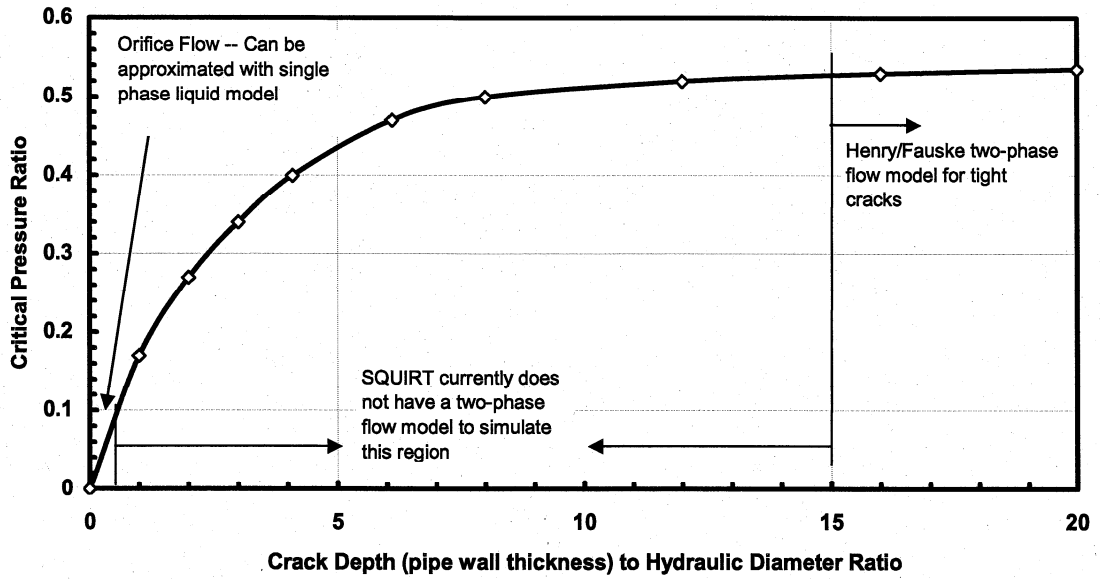

Figure 3B-1 Applicable Ranges of SQUIRT (Figure 1-1 in Reference 3B-6)

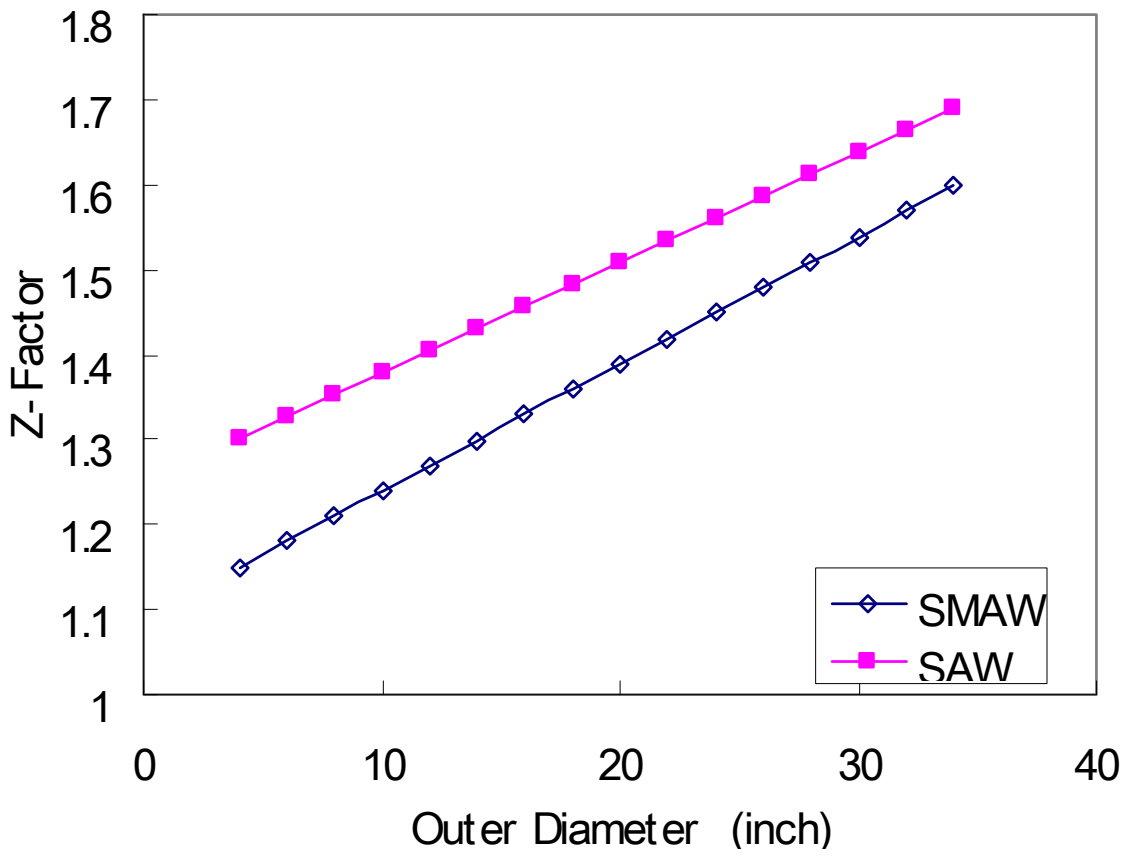

Figure 3B-2 Z- Factor of SMAW and SAW

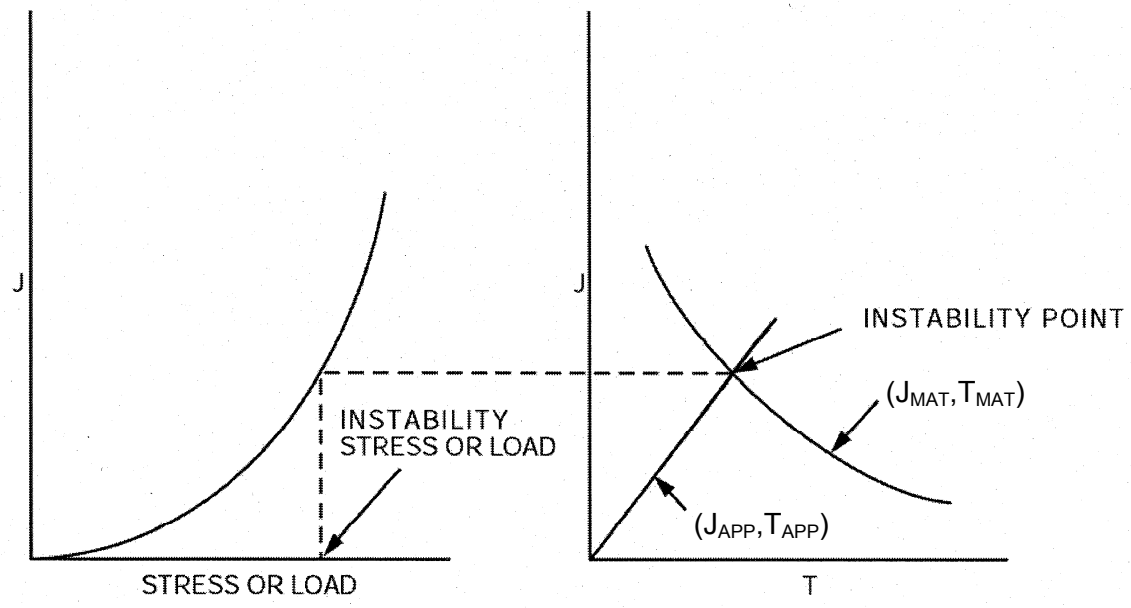

Figure 3B-3 J-T Methodology for Stability Evaluation (References 3B-1, 3B-16)

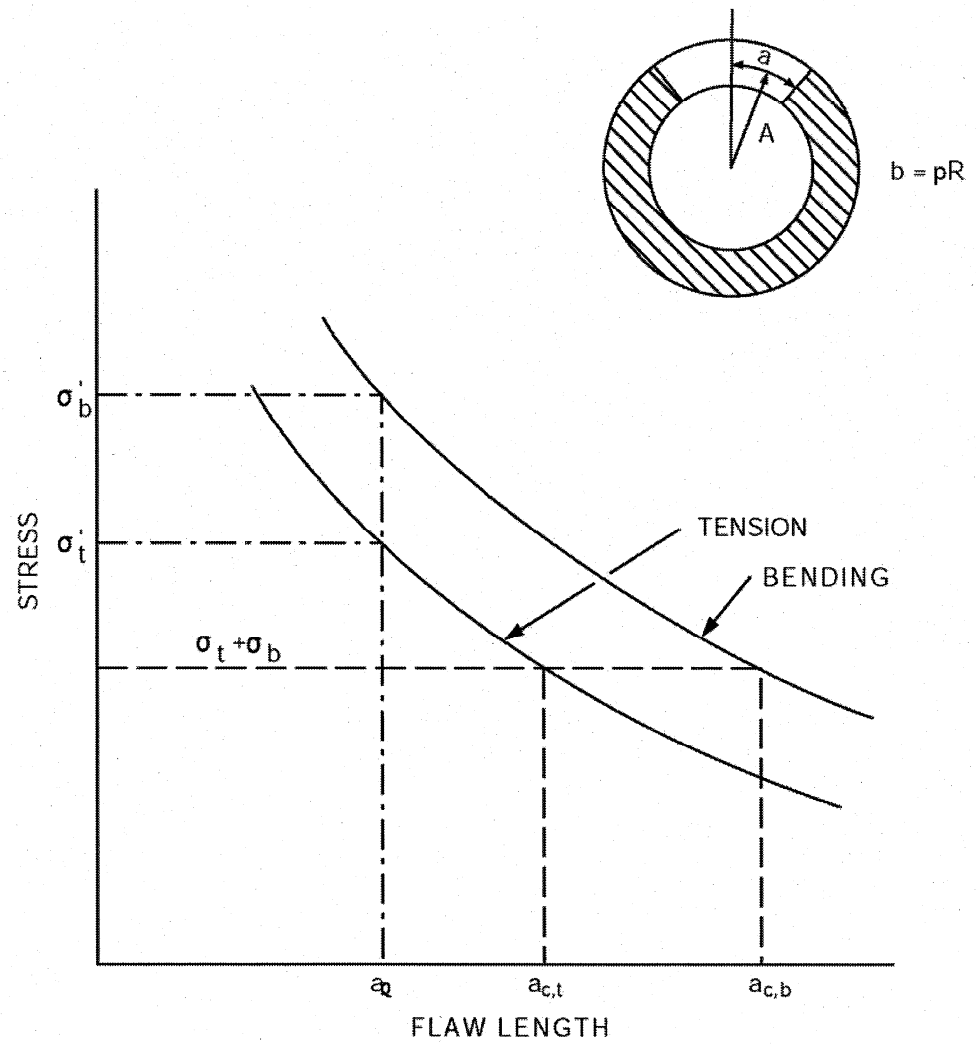

Figure 3B-4 Combination Scheme of Tension and Bending (Reference 3B-16)

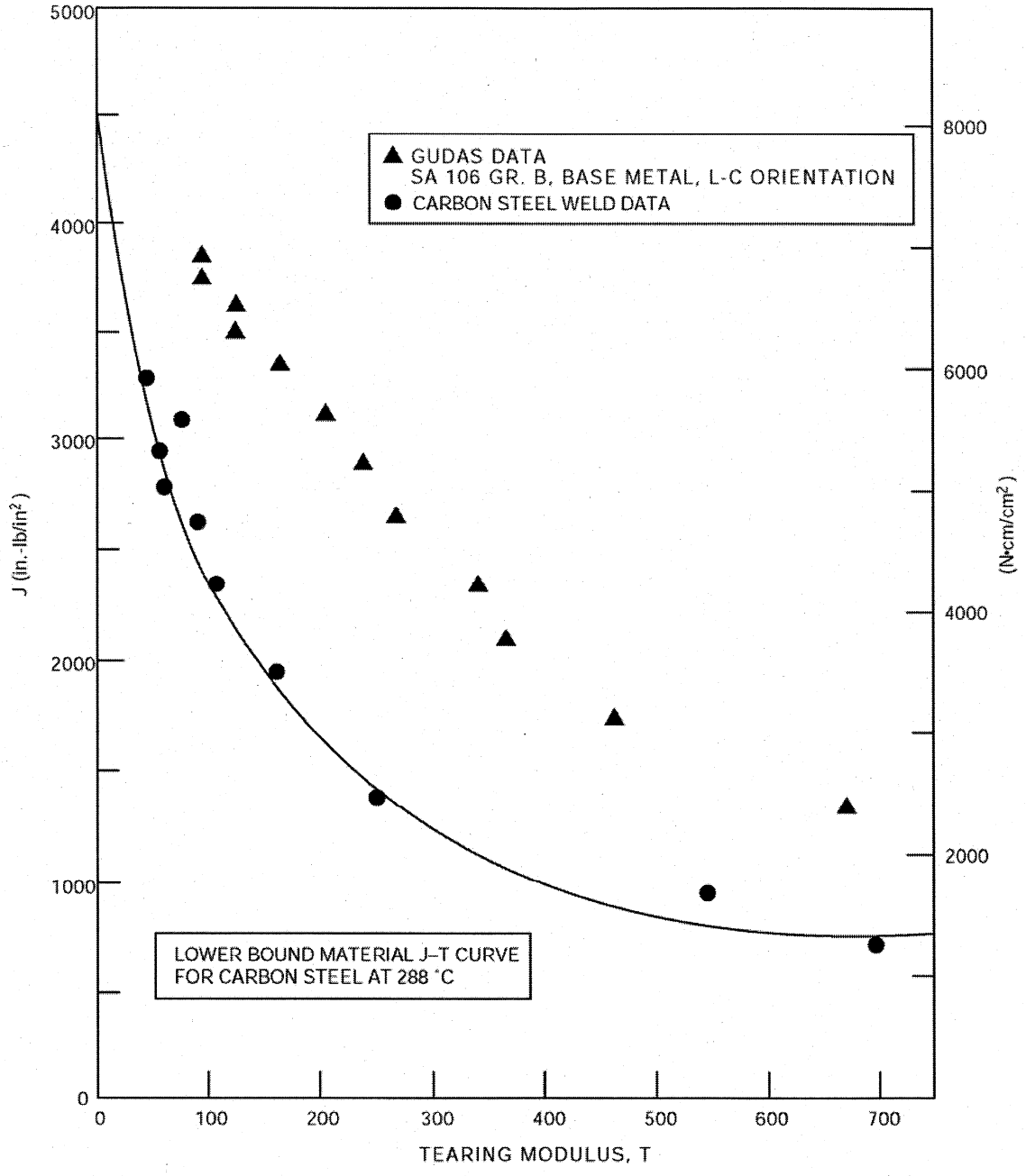

Figure 3B-5 $(J\text{-}T)_{mat}$ Curve at 550° F (Reference 3B-16)

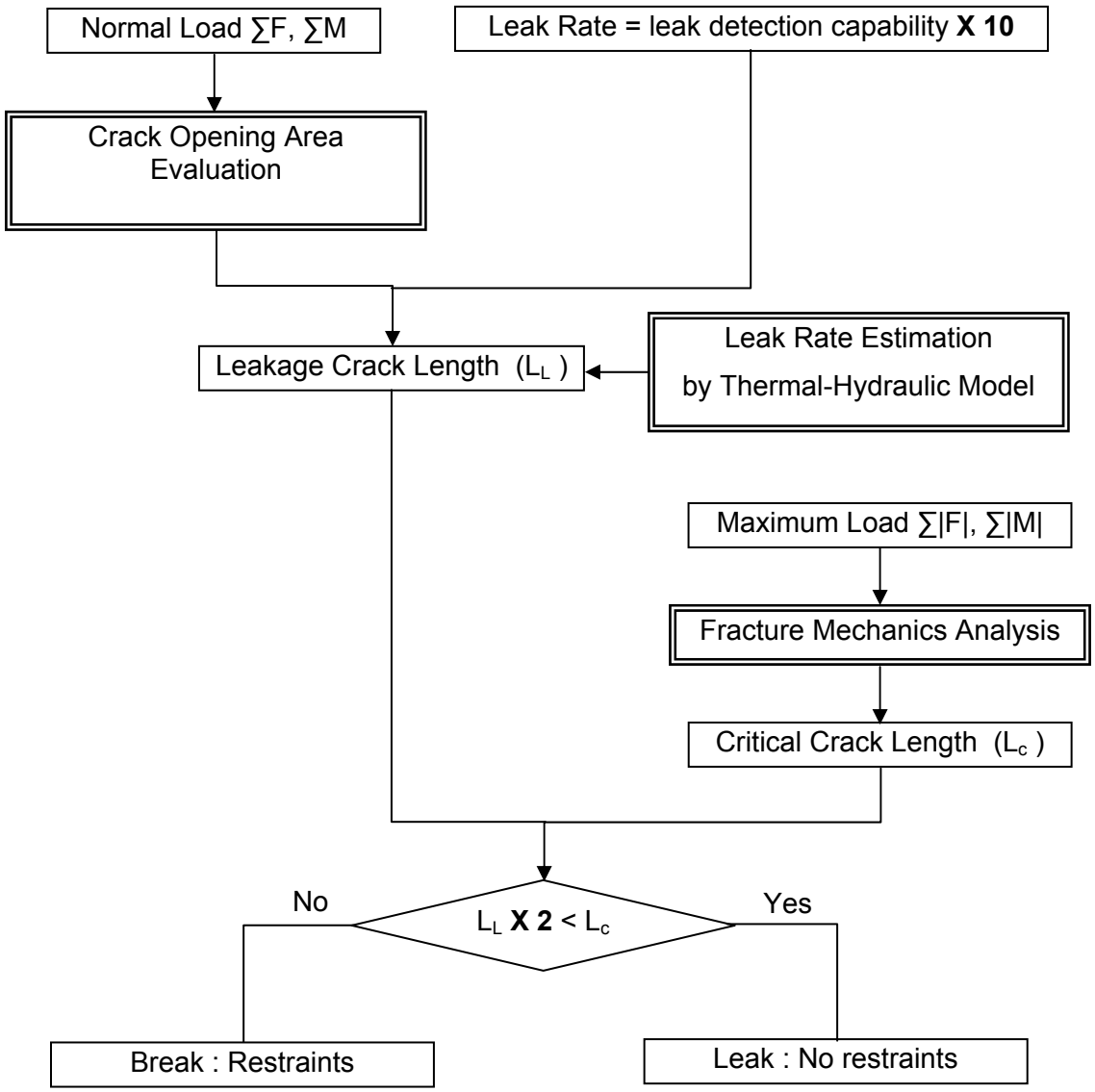

Figure 3B-6 LBB Evaluation Procedure of the U.S. Plant

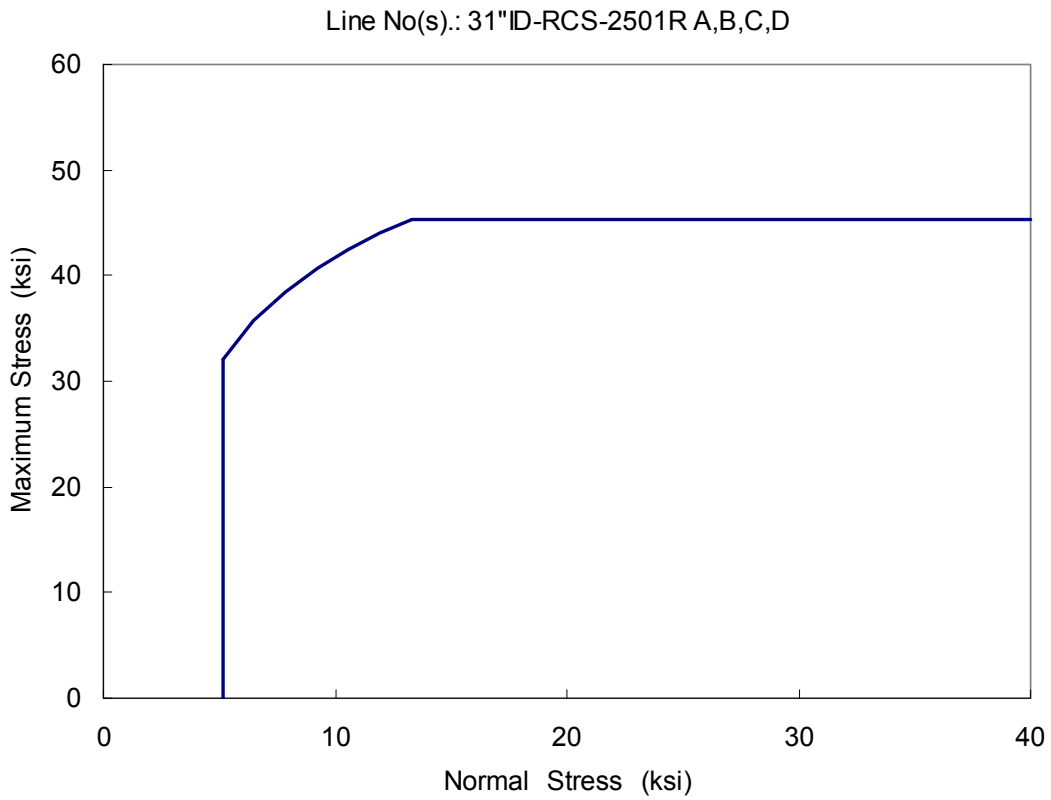

Figure No.:	1	
System:	RCS	
Nominal Diameter:	31"ID	
Outside Diameter:	37.120	inch
Nominal Thickness:	3.060	inch
Pipe Material:	SA-182 F316 (t<=5)	
Normal Operating Pressure:	2235.0	psig
Normal Operating Temperature:	617.0	F

Critical Flaw Size = 2 x Leakage Flaw Size
Load Margin = 1.0
Leak Rate = 10 x Leak Detection Capability

Figure 3B-7 US-APWR BAC for Primary Loop Hot Leg (SA182F316)

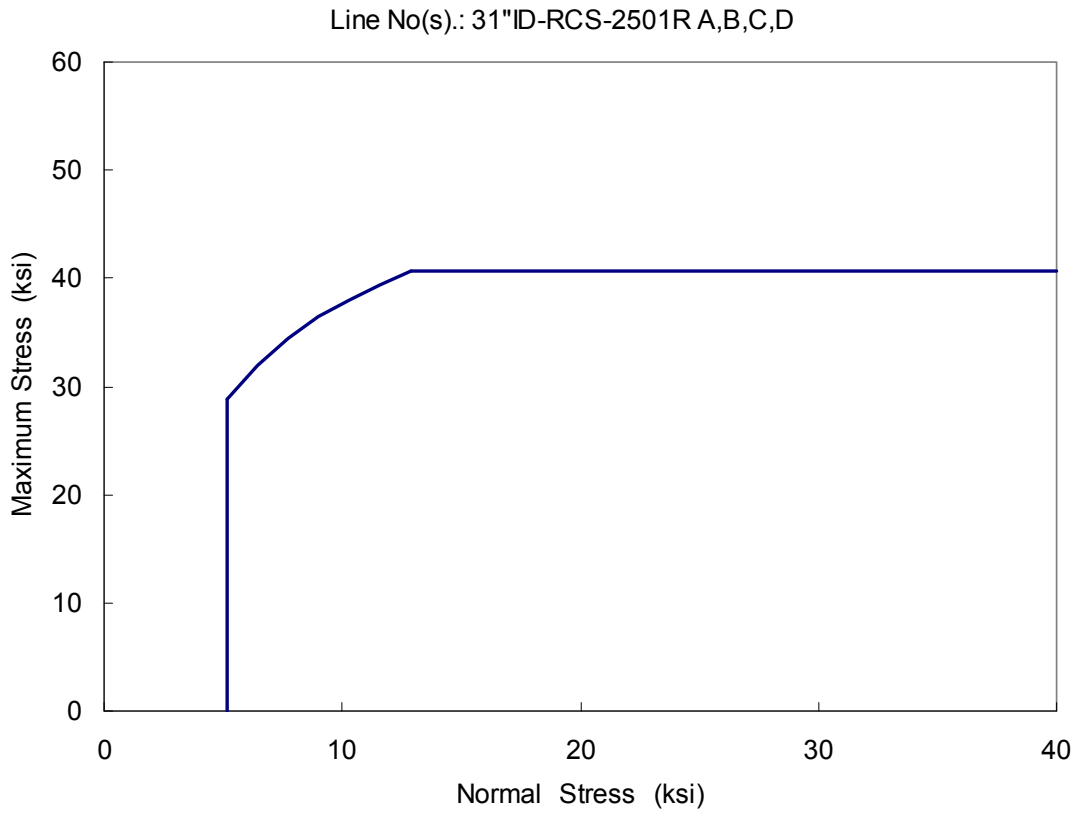

Figure No.:	1	
System:	RCS	
Nominal Diameter:	31"ID	
Outside Diameter:	37.120	inch
Nominal Thickness:	3.060	inch
Pipe Material:	SA-182 F316LN (t<=5)	
Normal Operating Pressure:	2235.0	psig
Normal Operating Temperature:	617.0	F

Critical Flaw Size = 2 x Leakage Flaw Size
Load Margin = 1.0
Leak Rate = 10 x Leak Detection Capability

Figure 3B-8 US-APWR BAC for Primary Loop Hot Leg (SA182 F316LN)

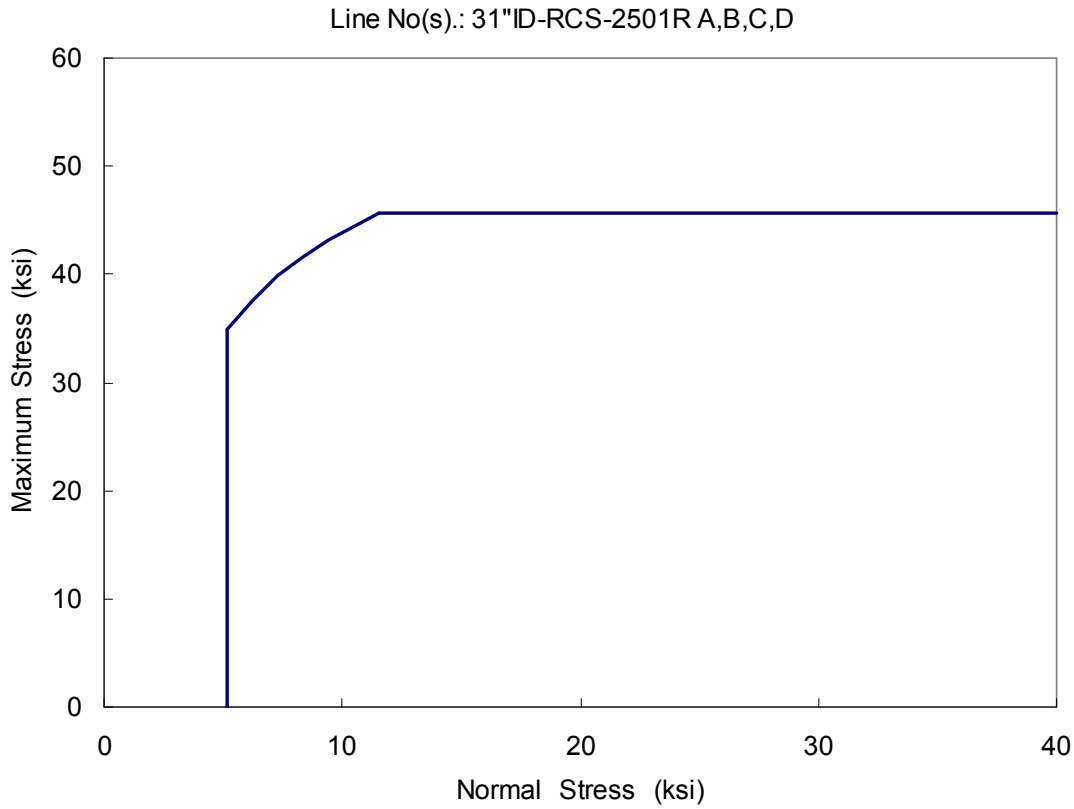

Figure No.:	2&3	
System:	RCS	
Nominal Diameter:	31"ID	
Outside Diameter:	37.120	inch
Nominal Thickness:	3.060	inch
Pipe Material:	SA-182 F316 (t<=5)	
Normal Operating Pressure:	2235.0	psig
Normal Operating Temperature:	550.6	F

Critical Flaw Size = 2 x Leakage Flaw Size
Load Margin = 1.0
Leak Rate = 10 x Leak Detection Capability

Figure 3B-9 US-APWR BAC for Primary Loop Cross Over Leg (SA182 F316)

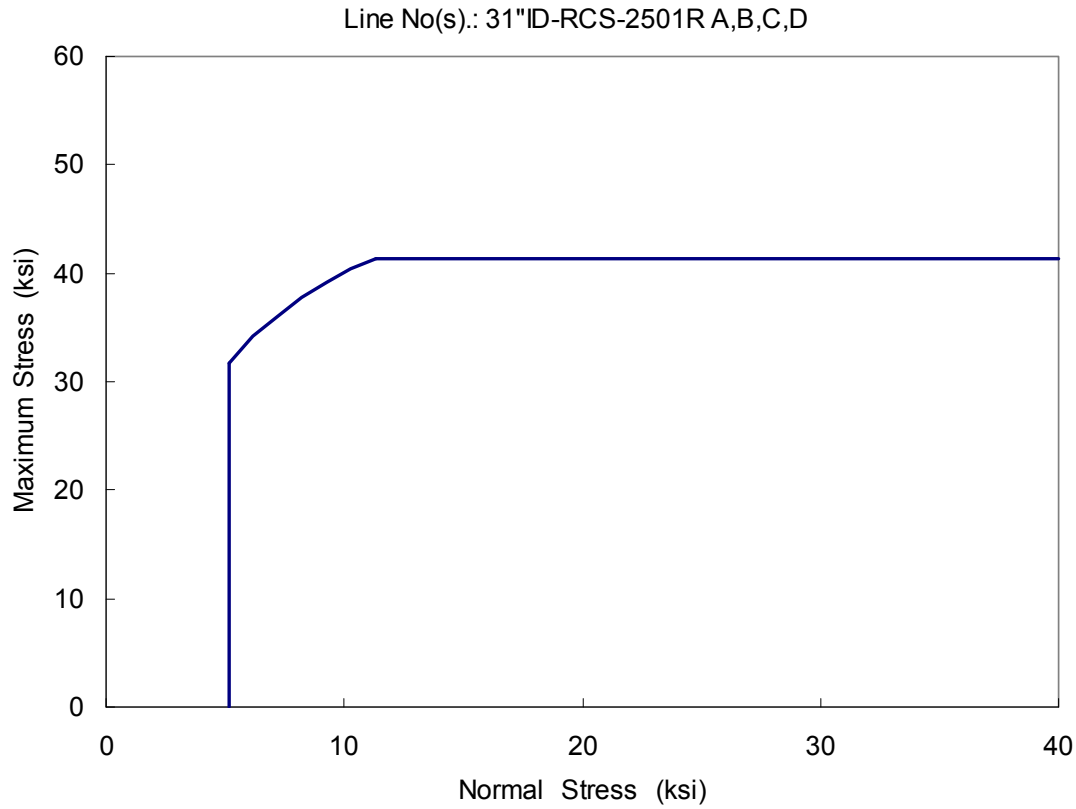

Figure No.:	2&3	
System:	RCS	
Nominal Diameter:	31"ID	
Outside Diameter:	37.120	inch
Nominal Thickness:	3.060	inch
Pipe Material:	SA-182 F316LN (t<=5)	
Normal Operating Pressure:	2235.0	psig
Normal Operating Temperature:	550.6	F

Critical Flaw Size = 2 x Leakage Flaw Size
Load Margin = 1.0
Leak Rate = 10 x Leak Detection Capability

Figure 3B-10 US-APWR BAC for Primary Loop Cross Over Leg (SA182 F316LN)

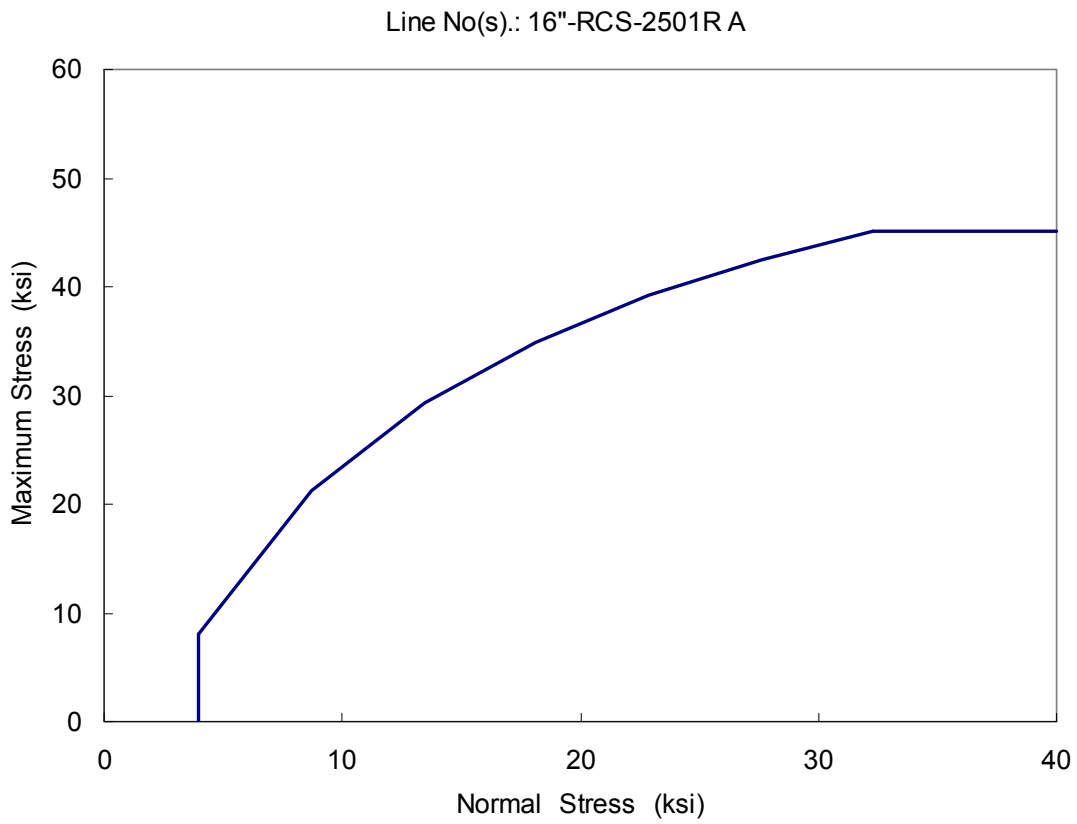

Figure No.:	4	
System:	RCS	
Nominal Diameter:	16"	
Outside Diameter:	16.000	inch
Nominal Thickness:	1.594	inch
Pipe Material:	SA-312 TP316	
Normal Operating Pressure:	2235.0	psig
Normal Operating Temperature:	653.0	F

Critical Flaw Size = 2 x Leakage Flaw Size
Load Margin = 1.0
Leak Rate = 10 x Leak Detection Capability

Figure 3B-11 US-APWR BAC for Surge Line

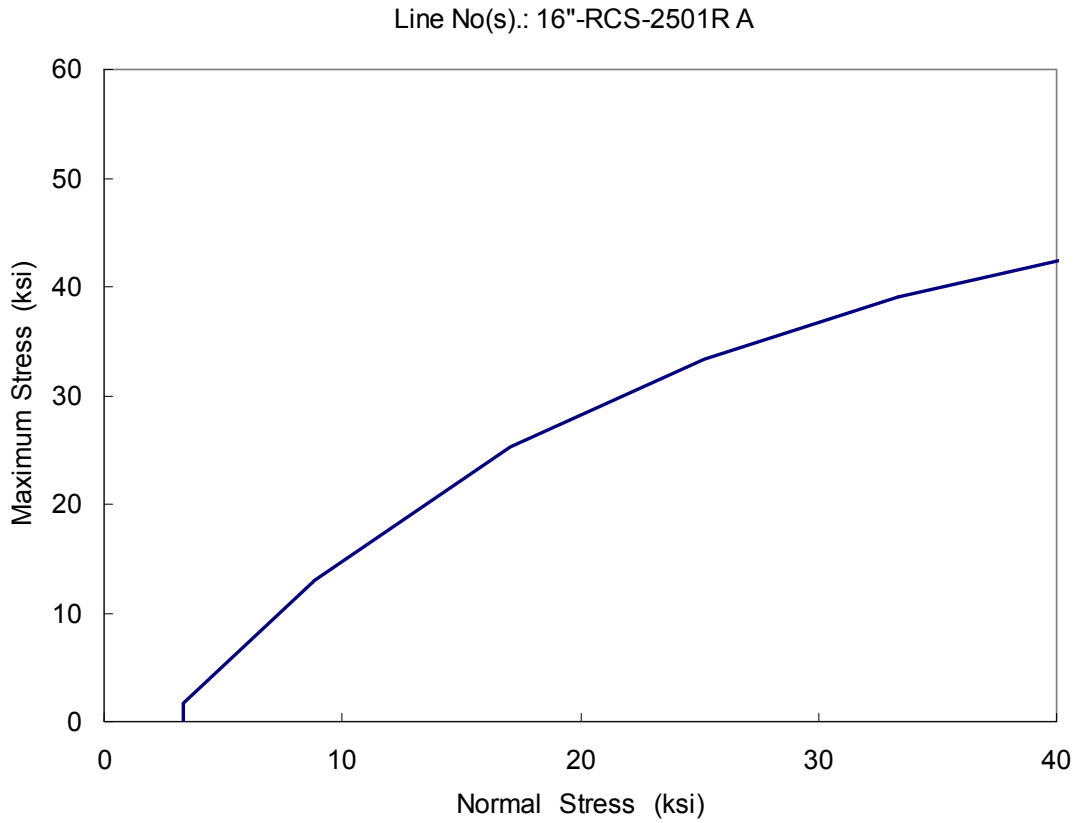

Figure No.:	5	
System:	RCS	
Nominal Diameter:	16"	
Outside Diameter:	16.000	inch
Nominal Thickness:	1.594	inch
Pipe Material:	SA-312 TP316	
Normal Operating Pressure:	400.0	psig
Normal Operating Temperature:	449.0	F

Critical Flaw Size = 2 x Leakage Flaw Size
Load Margin = 1.0
Leak Rate = 10 x Leak Detection Capability

Figure 3B-12 US–APWR BAC for Surge Line

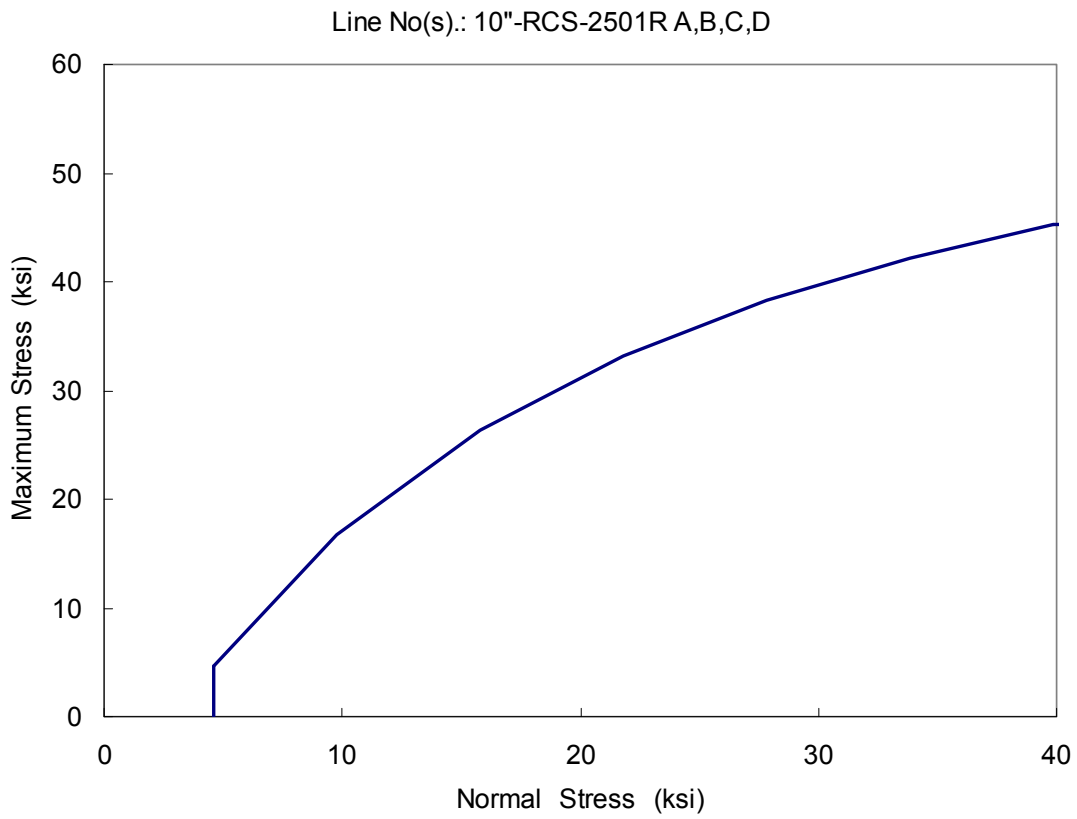

Figure No.:	6	
System:	RCS	
Nominal Diameter:	10"	
Outside Diameter:	10.750	inch
Nominal Thickness:	1.125	inch
Pipe Material:	SA-312 TP316	
Normal Operating Pressure:	2235.0	psig
Normal Operating Temperature:	617.0	F

Critical Flaw Size = 2 x Leakage Flaw Size
Load Margin = 1.0
Leak Rate = 10 x Leak Detection Capability

Figure 3B-13 US–APWR BAC for RHRS

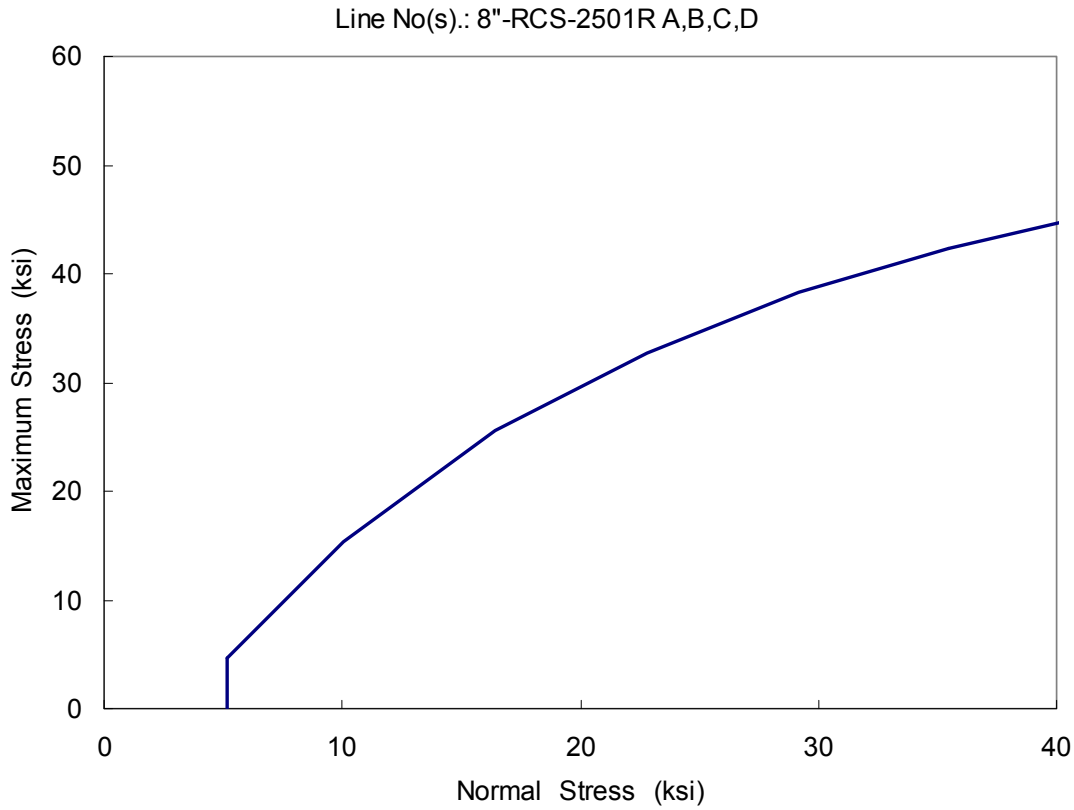

Figure No.:	7	
System:	RCS	
Nominal Diameter:	8"	
Outside Diameter:	8.625	inch
Nominal Thickness:	0.906	inch
Pipe Material:	SA-312 TP316	
Normal Operating Pressure:	2235.0	psig
Normal Operating Temperature:	550.6	F

Critical Flaw Size = 2 x Leakage Flaw Size
Load Margin = 1.0
Leak Rate = 10 x Leak Detection Capability

Figure 3B-14 US-APWR BAC for RHRS

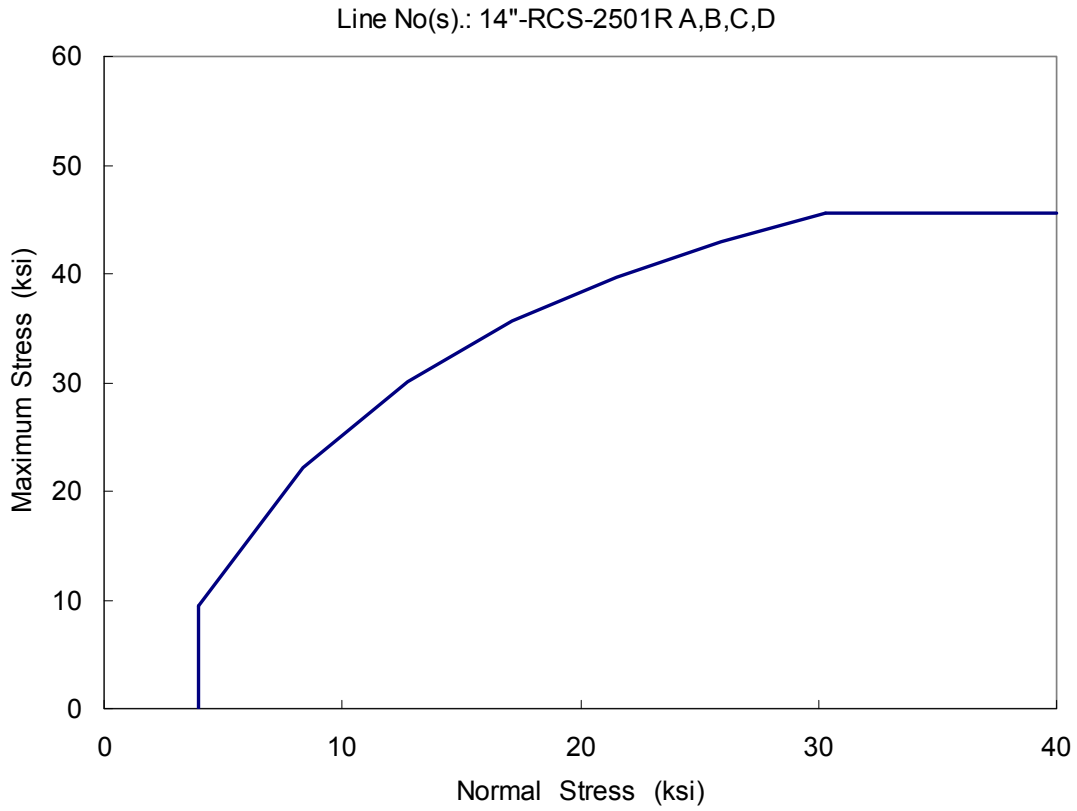

Figure No.:	8	
System:	SIS	
Nominal Diameter:	14"	
Outside Diameter:	14.000	inch
Nominal Thickness:	1.406	inch
Pipe Material:	SA-312 TP316	
Normal Operating Pressure:	2235.0	psig
Normal Operating Temperature:	550.6	F

Critical Flaw Size = 2 x Leakage Flaw Size
Load Margin = 1.0
Leak Rate = 10 x Leak Detection Capability

Figure 3B-15 US–APWR BAC for Accumulator System

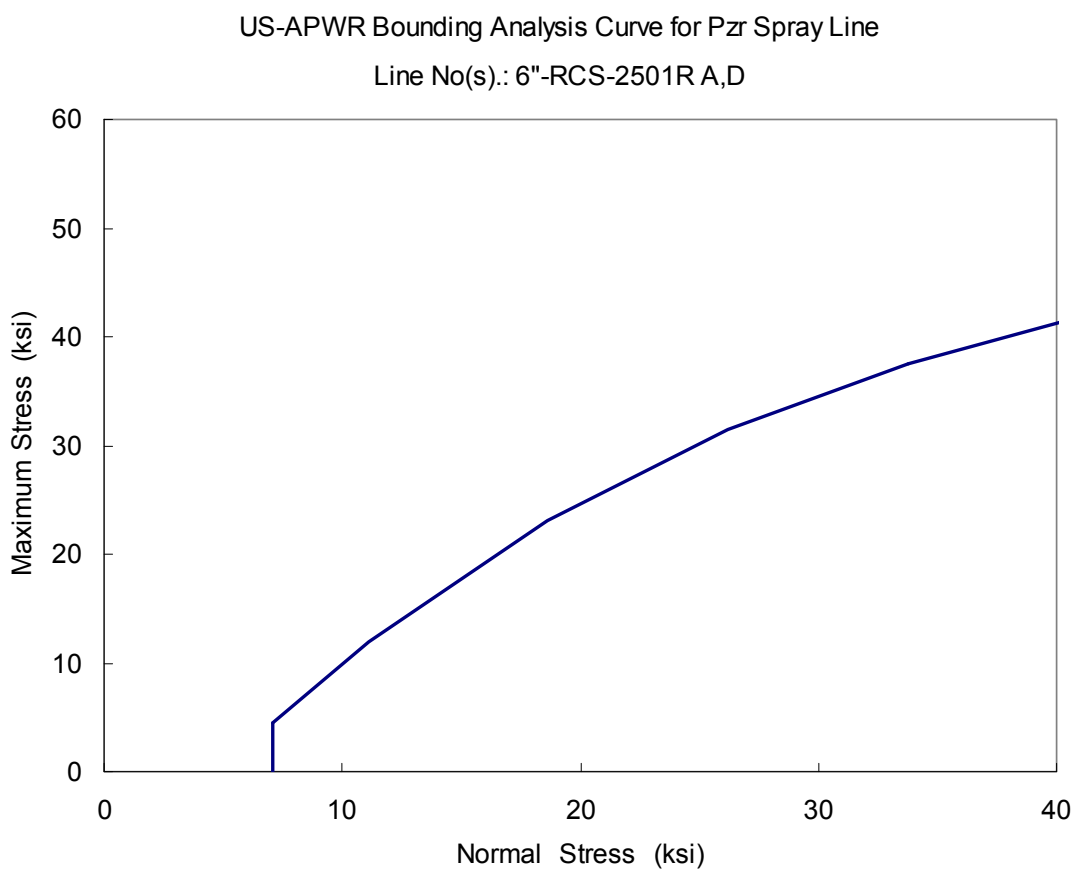

Figure No.:	9	
System:	RCS	
Nominal Diameter:	6"	
Outside Diameter:	6.625	inch
Nominal Thickness:	0.719	inch
Pipe Material:	SA-312 TP316	
Normal Operating Pressure:	2235.0	psig
Normal Operating Temperature:	550.6	F

Critical Flaw Size = 2 x Leakage Flaw Size
Load Margin = 1.0
Leak Rate = 10 x Leak Detection Capability

Figure 3B-16 US-APWR BAC for Pressurizer Spray Line

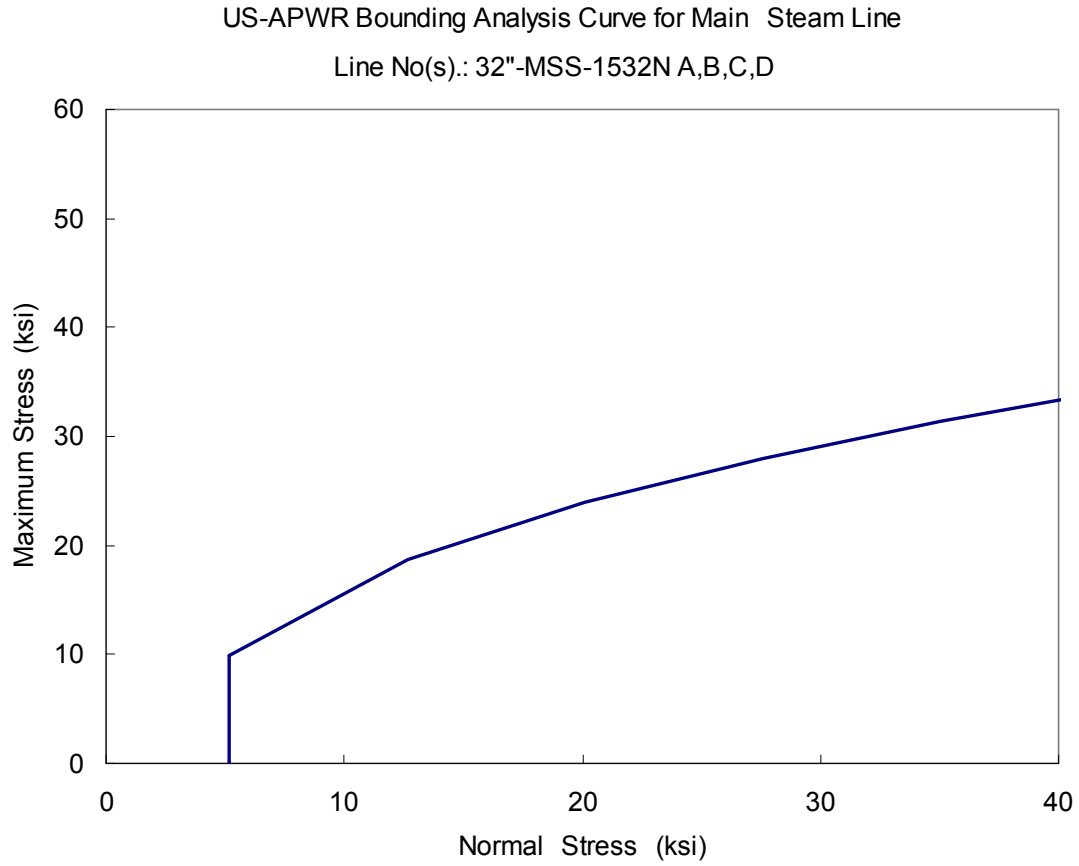

Figure No.:	10	
System:	MSS	
Nominal Diameter:	32"	
Outside Diameter:	32.000	inch
Nominal Thickness:	1.496	inch
Pipe Material:	SA333 Gr.6	
Normal Operating Pressure:	907.0	psig
Normal Operating Temperature:	535.0	F

Critical Flaw Size = 2 x Leakage Flaw Size
Load Margin = 1.0
Leak Rate = 10 x Leak Detection Capability

Figure 3B-17 US-APWR BAC for Main Steam Line

APPENDIX 3C

REACTOR COOLANT LOOP ANALYSIS METHODS

CONTENTS

Page

3C Reactor Coolant Loop Analysis Methods

3C.1 Introduction 3C-1

3C.2 RCL Model Description 3C-1

3C.2.1 Modeling of Primary Components and Equipment 3C-1

3C.2.2 Modeling of Supports 3C-2

3C.2.2.1 SG Supports 3C-2

3C.2.2.2 RCP Supports 3C-2

3C.2.2.3 RV Support 3C-2

3C.2.3 Modeling of RCL Piping 3C-3

3C.3 Design Requirements 3C-3

3C.4 Static Analyses 3C-3

3C.4.1 Deadweight 3C-3

3C.4.2 Internal Pressure 3C-3

3C.4.3 Thermal Expansion 3C-4

3C.5 Dynamic Analyses 3C-4

3C.6 Description of Computer Programs 3C-4

3C.7 References 3C-4

ACRONYMS AND ABBREVIATIONS

ASME	American Society of Mechanical Engineers
CSDRS	certified seismic design response spectrum
FE	finite element
PCCV	prestressed concrete containment structure
R/B	reactor building
RCL	reactor coolant loop
RCP	reactor coolant pump
RV	reactor vessel
SG	steam generator
SSE	safe-shutdown earthquake

3C Reactor Coolant Loop Analysis Methods

3C.1 Introduction

This Appendix provides the analytical methods of the reactor coolant loop (RCL) piping and support system model.

The RCL dynamic analysis may be applied for both the coupled model that is combined with the RCL, reactor building (R/B), prestressed concrete containment vessel (PCCV), and containment internal structure, and the un-coupled model that consists of the RCL piping and support systems. The RCL properties of the both models are based on this Appendix.

The RCL dynamic analysis is performed using the time-history direct integration, the time-history modal, or response spectra methods based on the safe-shutdown earthquake (SSE) established as the certified seismic design response spectrum (CSDRS). The dynamic analysis of the coupled model can be applied using the time-history direct integration method. The resulting static and dynamic loads generated from the RCL piping and the component support models provide the end loads and displacements at the connecting components and support points for each loop analyzed.

Refer also to Subsection 3.9.3.1 for additional discussion on the modeling of the RCL piping and support system.

3C.2 RCL Model Description

The analysis model consists of the RCL hot, cold, and cross-over loop piping, steam generator (SG), reactor coolant pump (RCP), reactor vessel (RV), and component supports, as applicable, for each loop. The RCL piping and support system is modeled as three-dimensional finite elements (FEs) representing the components, pipes, and supports as beam elements, masses, and springs with imposed boundary conditions. The RCL of the US–APWR has four loops, which are modeled as beginning and ending at the hot leg and cold leg RV nozzles. These combined system models include both the translational and rotational stiffness, mass characteristics of the RCL piping and components, and the stiffness of supports. The stiffnesses and mass effects of auxiliary line piping are considered when they affect the system.

3C.2.1 Modeling of Primary Components and Equipment

The SG, RCP, and RV are modeled using equivalent pipe and beam elements, and are represented by lumped masses in each loop analysis. The geometry of the component is used to determine the properties of the equivalent piping or beam elements connecting masses. Other properties applied to the equivalent piping or beam elements include the modulus of elasticity and coefficient of thermal expansion corresponding to each thermal condition.

In the case of the RV, the cylindrical shell is modeled using equivalent beam element properties adjusted to simulate the fundamental frequency. Mass elements are assigned to represent the vessel shell, core barrel, fuel assemblies, and integrated head package.

3C.2.2 Modeling of Supports

3C.2.2.1 SG Supports

Each SG support system consists of an upper lateral support structure, an intermediate lateral support structure, and a lower lateral support structure.

Four columns support the vertical loads of the SG from the reinforced concrete slab below. The upper and lower ends of the columns are pin-jointed to permit movement of the SG caused by thermal expansion of piping.

The upper and intermediate lateral supports are horizontal restraints utilizing snubbers considering thermal expansion of piping, while the lower support structure is constructed entirely of structural steel and consists of the lateral support and the columns.

All support systems restrain horizontal and vertical movement of the SG in the event of an earthquake or other design basis accidents.

The stiffness of the upper and intermediate lateral supports includes the SG shell flexibility.

3C.2.2.2 RCP Supports

Each RCP support system consists of a lateral support structure and three support columns that support the vertical loads of the RCP from the slab below. The support structures are constructed entirely of structural steel.

The upper and lower ends of the columns are pin-jointed to permit the movement of the pumps caused by thermal expansion of the piping.

The lateral support structure is designed considering the thermal expansion of the piping and also restrains horizontal movement of the RCP in the event of an earthquake or other design basis accidents.

The value of the support stiffness is determined considering the flexibility of the structural support members. The stiffness of the lateral support also includes flexibility of the RCP casing.

3C.2.2.3 RV Support

The RV support system consists of eight steel support pads which are integrated with the inlet and outlet nozzle forgings. The support pads are placed on support brackets, which are supported by steel structure on the primary shield wall. The support system is designed for operating and accident load cases caused by seismic and postulated pipe rupture, including loss-of-coolant accidents. The supports are formed by sliding surfaces between the shim plates and support pads to allow radial thermal growth of the RCL and RV. The vessel position is maintained unchanged by controlling the horizontal load through the support brackets and the base plate.

The RV supports are modeled as eight spring elements simulating the RV supported on the primary shield wall. Each support is represented by a stiffness matrix consisting of

vertical and tangential stiffness. The RV model includes the effects of the vessel shell thermal expansion at the inlet and outlet nozzles and the stiffness of the primary shield wall.

3C.2.3 Modeling of RCL Piping

The three-dimensional model of the RCL piping is developed using pipe and bend elements. Each of the four RCLs has a hot leg, crossover leg, and cold leg. Nodal points are assigned at support points, and pipe bends. Nodes are connected by elements assigned with applicable properties. The straight runs and bends of each leg are input with the nominal dimensions. Lumped mass is used for both static and dynamic analyses.

3C.3 Design Requirements

The RCL analysis is consistent with piping analysis for the US-APWR, which uses the 1992 Edition of the ASME, Boiler and Pressure Vessel Code, Section III, Division 1 (Reference 3C-1). General and local primary membrane stress criterion is qualified by Equation (9) of the ASME Code, Section III, Paragraph NB-3652. Secondary stresses generated by thermal expansion are qualified by Equation (12) in ASME Code, Section III, Paragraph NB-3653.

The loadings for ASME Code, Section III, Class 1 components are defined in Subsection 3.9.3.1. The required load combinations for ASME Code, Section III, Class 1 components, piping, and supports are presented in Tables 3.9-3 and 3.9-4 for internal pressure, thermal expansion, weight, SSE, and Design Basis Pipe Break.

In addition to the analyses of these loads, the RCL piping is analyzed for the effect of cyclic fatigue due to the design transients and earthquakes smaller than SSE as discussed in Subsection 3.9.3.1.

3C.4 Static Analyses

RCL static analyses are modeled to include the RV supports, and the column supports of SG, and the RCP as active RCL supports. Lateral snubbers related to any of these components are considered inactive. The containment internal structure is not applicable as system loads in the deadweight analysis and, therefore, are omitted from the model. The static analysis includes RCL deadweight, internal pressure, and thermal expansion.

3C.4.1 Deadweight

The RCL is statically analyzed for the total weight of the RCL piping, equipment, and ancillary items including the weight of water. Deadweight piping mass is distributed by lumped mass during static analyses.

3C.4.2 Internal Pressure

The design value of normal internal operating pressure is utilized for static analyses of RCL pipe stresses and to obtain system support reactions.

3C.4.3 Thermal Expansion

The thermal expansion of the RCL piping, RV, SG, RCP, and the component supports are modeled and analyzed, as applicable. The contributions of the stiffness of auxiliary lines on the RCL piping model are generally negligible, by design of the auxiliary line supports.

3C.5 Dynamic Analyses

The RCL piping model for dynamic analyses is developed to include refined mass characteristics of the piping and equipment. The mass and the stiffness characteristics of the equipment are modeled to determine the effect of the equipment motion on the RCL piping model.

The RCL piping and support system analysis will be performed for the dynamic effects of an SSE. A coupled model or an uncoupled model of the containment internal structure and the RCL may be used for dynamic evaluation. The seismic input is obtained from the global FE model of the RCL, R/B, PCCV, and containment internal structure, and subgrade profiles described in Subsection 3.7.1. The duration of input is between 12 to 20 seconds, depending on the duration necessary to envelope the design response spectra.

The mass and stiffness characteristics of equipment are modeled to determine the effect of the equipment motion on the RCL piping and support system. The RCL piping model contains lumped masses for the analysis.

Damping is used with the building components at 5% and the loop components at 3 % of the critical damping.

3C.6 Description of Computer Programs

Computer programs used for the US-APWR, RCL analysis are consistent with those identified in Sections 3.9 and 3.12. The primary method of analysis for the RCL piping and support system is the FE analysis program ANSYS (Reference 3C-2). Refer to Subsection 3.7.2.3 for a discussion of the modeling procedures and guidelines.

3C.7 References

3C-1 ASME Boiler and Pressure Vessel Code, Section III. American Society of Mechanical Engineers, 1992 Edition including 1992 Addenda, Subsection NB, NC, and ND.

3C-2 ANSYS, Advanced Analysis Techniques Guide, Release 11.0, ANSYS, Inc., 2007.

APPENDIX 3D

US-APWR EQUIPMENT QUALIFICATION LIST SAFETY AND IMPORTANT TO SAFETY ELECTRICAL AND MECHANICAL EQUIPMENT

CONTENTS

Page

3D US-APWR Equipment Qualification List Safety and Important to Safety Electrical and Mechanical Equipment

3D.1 Introduction 3D-1

3D.1.1 Equipment Identification 3D-1

3D.1.2 Describe Tag ID Codes and Systems 3D-1

3D.1.3 Identification of Safety-Related Systems and Components 3D-1

3D.1.4 Description of the Supporting Analysis 3D-1

3D.1.5 Determination of Operating Times 3D-2

3D.1.6 Determination of Seismic Requirements 3D-2

3D.1.7 Determination of Radiation Exposure Requirements 3D-2

TABLES

Page

Table 3D-1 Equipment Post-Accident Operability Times 3D-3

Table 3D-2 US-APWR Environmental Qualification Equipment List 3D-5

ACRONYMS

A/B	auxiliary building
CFR	Code of Federal Regulations
CIV	containment isolation valve
DBA	design basis accident
EQ	equipment qualification
ESF	engineered safety features
O/B	outside building
PAM	post accident monitoring
PCCV	prestressed concrete containment vessel
PS/B	power source/building
R/B	reactor building
RCS	reactor coolant system
RT	reactor trip
T/B	turbine building
UHSRS	ultimate heat sink related structures

3D US-APWR Equipment Qualification List Safety and Important to Safety Electrical and Mechanical Equipment

3D.1 Introduction

This Appendix lists safety and important to safety mechanical and electrical equipment that is qualified for service in the US-APWR in accordance with the requirements delineated in the US-APWR equipment qualification (EQ) Program.

3D.1.1 Equipment Identification

Equipment is identified by system code and component type. Safety-related systems are described in Section 3.2. Safety related components and systems are relied upon to mitigate the consequences of a design basis accident (DBA). A safety-related function is an action relied upon during and following a design basis event to provide for:

- Integrity of the reactor coolant system
- The capability to shut down and maintain the reactor in a safe-shutdown conditions
- The capability to prevent or mitigate the consequences of an accident that could result in the potential for offsite exposure pursuant to the requirements delineated in 10 Code of Federal Regulations (CFR) 100.

Safety-related components and systems are selected in accordance with the above definition.

3D.1.2 Describe Tag ID Codes and Systems

Equipment is identified by system code and component type. For safety-related systems, there are normally four separate, independent trains or similar components.

3D.1.3 Identification of Safety-Related Systems and Components

As described in Section 3.2.

3D.1.4 Description of the Supporting Analysis

The expected temperature, pressure, and humidity during normal operations define the normal or expected operating conditions for each location. The design basis events addressed by the analysis loss of coolant accident, steam line break and feed water line break. These accidents are considered to bound the expected worst-case environmental conditions for mechanical and electrical systems and components. Various computer models are used to determine the expected severity of the environmental parameters at each location within the facility. This includes expected radiation and chemical exposure.

3D.1.5 Determination of Operating Times

The accident and post accident operating times are conservatively determined based on the safety related function(s) the equipment performs to mitigate a design basis event. These actions include:

- Trip and monitor functions of sensors and instruments
- Operability requirements for electromechanical equipment

3D.1.6 Determination of Seismic Requirements

The seismic analysis and requirements are described in Section 3.10. The seismic class of mechanical and fluid systems, components, and equipment are shown in Table 3.2-2 of Section 3.2. The seismic class of safety-related mechanical, electrical, and Instrumentation and Control are shown in Table 3D-2.

3D.1.7 Determination of Radiation Exposure Requirements

The normal operating dose rates and consequent 60 year design expected doses at various locations inside containment are derived from theoretical calculations assuming an expected 60 years of continuous operations with reactor power of 4,451 mega watts-thermal and steady state operating conditions. Radiation doses associated with postulated accidents are determined by analytical computer codes as described in Chapter 15.

Table 3D-1 Equipment Post-Accident Operability Times

Equipment	Required Post-Accident Operability	
Equipment necessary to perform trip functions	5 minutes	(Envelopes trip time requirements)
Equipment located outside containment, is accessible, and can be repaired, replaced, or recalibrated	2 weeks	
Equipment located inside containment that is inaccessible and is required for post-accident monitoring	4 months	(This number is based on an acceptable amount of time to be repaired, replaced, or recalibrated, or for an equivalent indication to be obtained.)
Equipment located inside containment, is inaccessible, or cannot be repaired, replaced, recalibrated or equivalent indication cannot be obtained	1 year	
Equipment located in a mild environment following an accident	Various	(Specific as to function, maximum of 1 year)

Brief Description of Section Headings

Item Number

Numerical sequence item numbering of the US-APWR Environmental Qualified Equipment.

Equipment Tag

Electrical equipment numbering system that uniquely identifies the item/device/component per acronyms/ abbreviations with sequential serial numbering system.

Description 1

Item/device/component brief description justifying the abbreviation/acronyms of the equipment tag references.

Location

Place where the referenced item/device/component is located in the building.

Purpose

This section shows the objective of the equipment that is being qualified.

Operational Duration

Duration of functional time period required by the equipment to fulfill is intended safety function. (This section allows for time units to be recorded in hours, minutes, days, and years.)

Environmental Conditions

This section illustrates the environmental condition that will be seen by the equipment that may be exposed to the plant operational environment.

Qualification Process

This section designates the equipment classification according to the discipline that the equipment belongs to, according to the qualification program for the US-APWR.

Seismic Category

This demonstrates structural integrity and operability of mechanical and electrical equipment in the event of an earthquake or any multiplications of elastic waves throughout the earth however they are caused, which the component is expected to withstand and operate at a fully functional level.

Comments

Any remarks or explanatory notes that may be necessary for further explanation of the item/device/component or environmental conditions

Table 3D-2 US-APWR Environmental Qualification Equipment List
(Sheet 1 of 57)

Item Num	Equipment Tag	Description	Location	Purpose	Operational Duration	Environmental Conditions	Qualification Process	Seismic Category	Comments
			(PCCV, R/B, A/B, O/B,T/B, UHSRS)	RT, ESF, PAM, Paressure Boundary (PB), Other		Harsh or Mild	E=Electrical M=Mechanical	I, II, Non	
Instruments (Transmitters)									
1	RCS-FT-412	Loop A - Reactor Coolant Flow	PCCV	RT	5min*	Harsh	E	I	*Not Required Post Accident
2	RCS-FT-413	Loop A - Reactor Coolant Flow	PCCV	RT	5min*	Harsh	E	I	*Not Required Post Accident
3	RCS-FT-414	Loop A - Reactor Coolant Flow	PCCV	RT	5min*	Harsh	E	I	*Not Required Post Accident
4	RCS-FT-415	Loop A - Reactor Coolant Flow	PCCV	RT	5min*	Harsh	E	I	*Not Required Post Accident
5	RCS-FT-422	Loop B - Reactor Coolant Flow	PCCV	RT	5min*	Harsh	E	I	*Not Required Post Accident
6	RCS-FT-423	Loop B - Reactor Coolant Flow	PCCV	RT	5min*	Harsh	E	I	*Not Required Post Accident
7	RCS-FT-424	Loop B - Reactor Coolant Flow	PCCV	RT	5min*	Harsh	E	I	*Not Required Post Accident
8	RCS-FT-425	Loop B - Reactor Coolant Flow	PCCV	RT	5min*	Harsh	E	I	*Not Required Post Accident
9	RCS-FT-432	Loop C - Reactor Coolant Flow	PCCV	RT	5min*	Harsh	E	I	*Not Required Post Accident
10	RCS-FT-433	Loop C - Reactor Coolant Flow	PCCV	RT	5min*	Harsh	E	I	*Not Required Post Accident
11	RCS-FT-434	Loop C - Reactor Coolant Flow	PCCV	RT	5min*	Harsh	E	I	*Not Required Post Accident
12	RCS-FT-435	Loop C - Reactor Coolant Flow	PCCV	RT	5min*	Harsh	E	I	*Not Required Post Accident
13	RCS-FT-442	Loop D - Reactor Coolant Flow	PCCV	RT	5min*	Harsh	E	I	*Not Required Post Accident
14	RCS-FT-443	Loop D - Reactor Coolant Flow	PCCV	RT	5min*	Harsh	E	I	*Not Required Post Accident
15	RCS-FT-444	Loop D - Reactor Coolant Flow	PCCV	RT	5min*	Harsh	E	I	*Not Required Post Accident
16	RCS-FT-445	Loop D - Reactor Coolant Flow	PCCV	RT	5min*	Harsh	E	I	*Not Required Post Accident
17	RCS-LT-451	Pressurizer Water Level	PCCV	RT,PAM, Other	1yr	Harsh	E	I	
18	RCS-LT-452	Pressurizer Water Level	PCCV	RT,PAM, Other	1yr	Harsh	E	I	
19	RCS-LT-453	Pressurizer Water Level	PCCV	RT,PAM, Other	1yr	Harsh	E	I	
20	RCS-LT-454	Pressurizer Water Level	PCCV	RT,PAM, Other	1yr	Harsh	E	I	
21	RCS-PT-410	Loop A - Reactor Coolant Pressure	PCCV	PAM, Other	1yr	Harsh	E	I	

Table 3D-2 US-APWR Environmental Qualification Equipment List
(Sheet 2 of 57)

Item Num	Equipment Tag	Description	Location	Purpose	Operational Duration	Environmental Conditions	Qualification Process	Seismic Category	Comments
			(PCCV, R/B, A/B, O/B,T/B, UHSRS)	RT, ESF, PAM, PB, Other		Harsh or Mild	E=Electrical M=Mechanical	I, II, Non	
22	RCS-PT-420	Loop B - Reactor Coolant Pressure	PCCV	PAM, Other	1yr	Harsh	E	I	
23	RCS-PT-430	Loop C - Reactor Coolant Pressure	PCCV	PAM, Other	1yr	Harsh	E	I	
24	RCS-PT-440	Loop D - Reactor Coolant Pressure	PCCV	PAM, Other	1yr	Harsh	E	I	
25	RCS-PT-451	Pressurizer Pressure	PCCV	RT, ESF Other	36hr	Harsh	E	I	
26	RCS-PT-452	Pressurizer Pressure	PCCV	RT, ESF Other	36hr	Harsh	E	I	
27	RCS-PT-453	Pressurizer Pressure	PCCV	RT, ESF Other	36hr	Harsh	E	I	
28	RCS-PT-454	Pressurizer Pressure	PCCV	RT, ESF Other	36hr	Harsh	E	I	
29	CVS-FT-218	Primary Makeup Water Supply Flow	R/B	Other	2wks	Mild	E	I	
30	CVS-FT-219	Primary Makeup Water Supply Flow	R/B	Other	2wks	Mild	E	I	
31	SIS-FT-962	A - Safety Injection Pump Discharge Flow	R/B	PAM, Other	2wks	Mild	E	I	
32	SIS-FT-963	B - Safety Injection Pump Discharge Flow	R/B	PAM, Other	2wks	Mild	E	I	
33	SIS-FT-964	C - Safety Injection Pump Discharge Flow	R/B	PAM, Other	2wks	Mild	E	I	
34	SIS-FT-965	D - Safety Injection Pump Discharge Flow	R/B	PAM, Other	2wks	Mild	E	I	
35	SIS-FT-972	A - Safety Injection Pump Minimum Flow	R/B	PAM, Other	2wks	Mild	E	I	
36	SIS-FT-973	B - Safety Injection Pump Minimum Flow	R/B	PAM, Other	2wks	Mild	E	I	
37	SIS-FT-974	C - Safety Injection Pump Minimum Flow	R/B	PAM, Other	2wks	Mild	E	I	
38	SIS-FT-975	D - Safety Injection Pump Minimum Flow	R/B	PAM, Other	2wks	Mild	E	I	
39	SIS-LT-910	A - Accumulator Water Level	PCCV	PAM	1yr	Harsh	E	I	
40	SIS-LT-920	B - Accumulator Water Level	PCCV	PAM	1yr	Harsh	E	I	
41	SIS-LT-930	C - Accumulator Water Level	PCCV	PAM	1yr	Harsh	E	I	
42	SIS-LT-940	D - Accumulator Water Level	PCCV	PAM	1yr	Harsh	E	I	
43	SIS-PT-910	A - Accumulator Pressure	PCCV	PAM, Other	1yr	Harsh	E	I	
44	(Deleted)								
45	SIS-PT-920	B - Accumulator Pressure	PCCV	PAM, Other	1yr	Harsh	E	I	
46	(Deleted)								
47	SIS-PT-930	C - Accumulator Pressure	PCCV	PAM, Other	1yr	Harsh	E	I	
48	(Deleted)								
49	SIS-PT-940	D - Accumulator Pressure	PCCV	PAM, Other	1yr	Harsh	E	I	

Table 3D-2 US-APWR Environmental Qualification Equipment List
(Sheet 3 of 57)

Item Num	Equipment Tag	Description	Location	Purpose	Operational Duration	Environmental Conditions	Qualification Process	Seismic Category	Comments
			(PCCV, R/B, A/B, O/B,T/B, UHSRS)	RT, ESF, PAM, PB, Other		Harsh or Mild	E=Electrical M=Mechanical	I, II, Non	
50	(Deleted)								
51	SIS-PT-960	A - Safety Injection Pump Suction Pressure	R/B	Other	36hr	Mild	E	I	
52	SIS-PT-961	B - Safety Injection Pump Suction Pressure	R/B	Other	36hr	Mild	E	I	
53	SIS-PT-962	C - Safety Injection Pump Suction Pressure	R/B	Other	36hr	Mild	E	I	
54	SIS-PT-963	D - Safety Injection Pump Suction Pressure	R/B	Other	36hr	Mild	E	I	
55	SIS-PT-964	A - Safety Injection Pump Discharge Pressure	R/B	Other	36hr	Mild	E	I	
56	SIS-PT-965	B - Safety Injection Pump Discharge Pressure	R/B	Other	36hr	Mild	E	I	
57	SIS-PT-966	C - Safety Injection Pump Discharge Pressure	R/B	Other	36hr	Mild	E	I	
58	SIS-PT-967	D - Safety Injection Pump Discharge Pressure	R/B	Other	36hr	Mild	E	I	
59	RHS-FT-601	A - Containment Spray / Residual Heat Removal Pump Discharge Flow	R/B	PAM, Other	2wks	Mild	E	I	
60	RHS-FT-604	A - Containment Spray / Residual Heat Removal Pump Minimum Flow	R/B	PAM, Other	2wks	Mild	E	I	
61	RHS-FT-611	B - Containment Spray / Residual Heat Removal Pump Discharge Flow	R/B	PAM, Other	2wks	Mild	E	I	
62	RHS-FT-614	B - Containment Spray / Residual Heat Removal Pump Minimum Flow	R/B	PAM, Other	2wks	Mild	E	I	
63	RHS-FT-621	C - Containment Spray / Residual Heat Removal Pump Discharge Flow	R/B	PAM, Other	2wks	Mild	E	I	
64	RHS-FT-624	C - Containment Spray / Residual Heat Removal Pump Minimum Flow	R/B	PAM, Other	2wks	Mild	E	I	
65	RHS-FT-631	D - Containment Spray / Residual Heat Removal Pump Discharge Flow	R/B	PAM, Other	2wks	Mild	E	I	
66	RHS-FT-634	D - Containment Spray / Residual Heat Removal Pump Minimum Flow	R/B	PAM, Other	2wks	Mild	E	I	
67	RHS-PT-600	A - Containment Spray / Residual Heat Removal Pump Suction Pressure	R/B	Other	36hr	Mild	E	I	
68	RHS-PT-601	A - Containment Spray / Residual Heat Removal Pump Discharge Pressure	R/B	Other	36hr	Mild	E	I	
69	RHS-PT-610	B - Containment Spray / Residual Heat Removal Pump Suction Pressure	R/B	Other	36hr	Mild	E	I	
70	RHS-PT-611	B - Containment Spray / Residual Heat Removal Pump Discharge Pressure	R/B	Other	36hr	Mild	E	I	

Table 3D-2 US-APWR Environmental Qualification Equipment List
(Sheet 4 of 57)

Item Num	Equipment Tag	Description	Location	Purpose	Operational Duration	Environmental Conditions	Qualification Process	Seismic Category	Comments
			(PCCV, R/B, A/B, O/B,T/B, UHSRS)	RT, ESF, PAM, PB, Other		Harsh or Mild	E=Electrical M=Mechanical	I, II, Non	
71	RHS-PT-620	C - Containment Spray / Residual Heat Removal Pump Suction Pressure	R/B	Other	36hr	Mild	E	I	
72	RHS-PT-621	C - Containment Spray / Residual Heat Removal Pump Discharge Pressure	R/B	Other	36hr	Mild	E	I	
73	RHS-PT-630	D - Containment Spray / Residual Heat Removal Pump Suction Pressure	R/B	Other	36hr	Mild	E	I	
74	RHS-PT-631	D - Containment Spray / Residual Heat Removal Pump Discharge Pressure	R/B	Other	36hr	Mild	E	I	
75	EFS-FT-3716	A - Emergency Feedwater Flow	R/B	PAM, Other	2wks	Mild	E	I	
76	EFS-FT-3726	B - Emergency Feedwater Flow	R/B	PAM, Other	2wks	Mild	E	I	
77	EFS-FT-3736	C - Emergency Feedwater Flow	R/B	PAM, Other	2wks	Mild	E	I	
78	EFS-FT-3746	D - Emergency Feedwater Flow	R/B	PAM, Other	2wks	Mild	E	I	
79	EFS-LT-3760	A - Emergency Feedwater Pit Water Level	R/B	PAM, Other	2wks	Mild	E	I	
80	EFS-LT-3761	A - Emergency Feedwater Pit Water Level	R/B	PAM, Other	2wks	Mild	E	I	
81	EFS-LT-3770	B - Emergency Feedwater Pit Water Level	R/B	PAM, Other	2wks	Mild	E	I	
82	EFS-LT-3771	B - Emergency Feedwater Pit Water Level	R/B	PAM, Other	2wks	Mild	E	I	
83	EFS-PT-3752	A - Emergency Feedwater Pump Discharge Pressure	R/B	Other	36hr	Mild	E	I	
84	EFS-PT-3750	B - Emergency Feedwater Pump Discharge Pressure	R/B	Other	36hr	Mild	E	I	
85	EFS-PT-3751	C - Emergency Feedwater Pump Discharge Pressure	R/B	Other	36hr	Mild	E	I	
86	EFS-PT-3753	D - Emergency Feedwater Pump Discharge Pressure	R/B	Other	36hr	Mild	E	I	
87	NFS-LT-460	A - Steam Generator Water Level (Narrow Range)	PCCV	RT,ESF, PAM	1yr	Harsh	E	I	
88	NFS-LT-461	A - Steam Generator Water Level (Narrow Range)	PCCV	RT,ESF, PAM	1yr	Harsh	E	I	
89	NFS-LT-462	A - Steam Generator Water Level (Narrow Range)	PCCV	RT,ESF, PAM	1yr	Harsh	E	I	
90	NFS-LT-463	A - Steam Generator Water Level (Narrow Range)	PCCV	RT,ESF, PAM	1yr	Harsh	E	I	
91	NFS-LT-464	A - Steam Generator Water Level (Wide Range)	PCCV	PAM, Other	1yr	Harsh	E	I	
92	NFS-LT-470	B - Steam Generator Water Level (Narrow Range)	PCCV	RT,ESF, PAM	1yr	Harsh	E	I	

Table 3D-2 US-APWR Environmental Qualification Equipment List
(Sheet 5 of 57)

Item Num	Equipment Tag	Description	Location	Purpose	Operational Duration	Environmental Conditions	Qualification Process	Seismic Category	Comments
			(PCCV, R/B, A/B, O/B,T/B, UHSRS)	RT, ESF, PAM, PB, Other		Harsh or Mild	E=Electrical M=Mechanical	I, II, Non	
93	NFS-LT-471	B - Steam Generator Water Level (Narrow Range)	PCCV	RT,ESF, PAM	1yr	Harsh	E	I	
94	NFS-LT-472	B - Steam Generator Water Level (Narrow Range)	PCCV	RT,ESF, PAM	1yr	Harsh	E	I	
95	NFS-LT-473	B - Steam Generator Water Level (Narrow Range)	PCCV	RT,ESF, PAM	1yr	Harsh	E	I	
96	NFS-LT-474	B - Steam Generator Water Level (Wide Range)	PCCV	PAM, Other	1yr	Harsh	E	I	
97	NFS-LT-480	C - Steam Generator Water Level (Narrow Range)	PCCV	RT,ESF, PAM	1yr	Harsh	E	I	
98	NFS-LT-481	C - Steam Generator Water Level (Narrow Range)	PCCV	RT,ESF, PAM	1yr	Harsh	E	I	
99	NFS-LT-482	C - Steam Generator Water Level (Narrow Range)	PCCV	RT,ESF, PAM	1yr	Harsh	E	I	
100	NFS-LT-483	C - Steam Generator Water Level (Narrow Range)	PCCV	RT,ESF, PAM	1yr	Harsh	E	I	
101	NFS-LT-484	C - Steam Generator Water Level (Wide Range)	PCCV	PAM, Other	1yr	Harsh	E	I	
102	NFS-LT-490	D - Steam Generator Water Level (Narrow Range)	PCCV	RT,ESF, PAM	1yr	Harsh	E	I	
103	NFS-LT-491	D - Steam Generator Water Level (Narrow Range)	PCCV	RT,ESF, PAM	1yr	Harsh	E	I	
104	NFS-LT-492	D - Steam Generator Water Level (Narrow Range)	PCCV	RT,ESF, PAM	1yr	Harsh	E	I	
105	NFS-LT-493	D - Steam Generator Water Level (Narrow Range)	PCCV	RT,ESF, PAM	1yr	Harsh	E	I	
106	NFS-LT-494	D - Steam Generator Water Level (Wide Range)	PCCV	PAM, Other	1yr	Harsh	E	I	
107	NMS-PT-465	A - Main Steam Line Pressure	R/B	ESF,PAM, Other	2wks	Mild	E	I	
108	NMS-PT-466	A - Main Steam Line Pressure	R/B	ESF,PAM	2wks	Mild	E	I	
109	NMS-PT-467	A - Main Steam Line Pressure	R/B	ESF,PAM	2wks	Mild	E	I	
110	NMS-PT-468	A - Main Steam Line Pressure	R/B	ESF,PAM, Other	2wks	Mild	E	I	
111	NMS-PT-475	B - Main Steam Line Pressure	R/B	ESF,PAM, Other	2wks	Mild	E	I	
112	NMS-PT-476	B - Main Steam Line Pressure	R/B	ESF,PAM	2wks	Mild	E	I	
113	NMS-PT-477	B - Main Steam Line Pressure	R/B	ESF,PAM	2wks	Mild	E	I	
114	NMS-PT-478	B - Main Steam Line Pressure	R/B	ESF,PAM, Other	2wks	Mild	E	I	
115	NMS-PT-485	C - Main Steam Line Pressure	R/B	ESF,PAM, Other	2wks	Mild	E	I	
116	NMS-PT-486	C - Main Steam Line Pressure	R/B	ESF,PAM	2wks	Mild	E	I	

Table 3D-2 US-APWR Environmental Qualification Equipment List
(Sheet 6 of 57)

Item Num	Equipment Tag	Description	Location	Purpose	Operational Duration	Environmental Conditions	Qualification Process	Seismic Category	Comments
			(PCCV, R/B, A/B, O/B,T/B, UHSRS)	RT, ESF, PAM, PB, Other		Harsh or Mild	E=Electrical M=Mechanical	I, II, Non	
117	NMS-PT-487	C - Main Steam Line Pressure	R/B	ESF,PAM	2wks	Mild	E	I	
118	NMS-PT-488	C - Main Steam Line Pressure	R/B	ESF,PAM, Other	2wks	Mild	E	I	
119	NMS-PT-495	D - Main Steam Line Pressure	R/B	ESF,PAM, Other	2wks	Mild	E	I	
120	NMS-PT-496	D - Main Steam Line Pressure	R/B	ESF,PAM	2wks	Mild	E	I	
121	NMS-PT-497	D - Main Steam Line Pressure	R/B	ESF,PAM	2wks	Mild	E	I	
122	NMS-PT-498	D - Main Steam Line Pressure	R/B	ESF,PAM, Other	2wks	Mild	E	I	
123	NMS-PT-505	Turbine Inlet Pressure	T/B	RT	5min	Mild	E	Non	
124	NMS-PT-506	Turbine Inlet Pressure	T/B	RT	5min	Mild	E	Non	
125	NMS-PT-507	Turbine Inlet Pressure	T/B	RT	5min	Mild	E	Non	
126	NMS-PT-508	Turbine Inlet Pressure	T/B	RT	5min	Mild	E	Non	
127	CSS-PT-950	Containment Pressure	PCCV, R/B	ESF,PAM	1yr	Harsh / Mild	E	I	Transmitter is located in RB
128	CSS-PT-951	Containment Pressure	PCCV, R/B	ESF,PAM	1yr	Harsh / Mild	E	I	Transmitter is located in RB
129	CSS-PT-952	Containment Pressure	PCCV, R/B	ESF,PAM	1yr	Harsh / Mild	E	I	Transmitter is located in RB
130	CSS-PT-953	Containment Pressure	PCCV, R/B	ESF,PAM	1yr	Harsh / Mild	E	I	Transmitter is located in RB
131	NCS-FT-1224	A - Component Cooling Water Header Flow	R/B	Other	36hr	Mild	E	I	
132	NCS-FT-1225	B - Component Cooling Water Header Flow	R/B	Other	36hr	Mild	E	I	
133	NCS-FT-1227	C - Component Cooling Water Header Flow	R/B	Other	36hr	Mild	E	I	
134	NCS-FT-1228	D - Component Cooling Water Header Flow	R/B	Other	36hr	Mild	E	I	
135	NCS-LT-1200	A - Component Cooling Water Surge Tank Water Level	R/B	Other	36hr	Mild	E	I	
136	NCS-LT-1201	A - Component Cooling Water Surge Tank Water Level	R/B	Other	36hr	Mild	E	I	
137	NCS-LT-1210	B - Component Cooling Water Surge Tank Water Level	R/B	Other	36hr	Mild	E	I	
138	NCS-LT-1211	B - Component Cooling Water Surge Tank Water Level	R/B	Other	36hr	Mild	E	I	

Table 3D-2 US-APWR Environmental Qualification Equipment List
(Sheet 7 of 57)

Item Num	Equipment Tag	Description	Location	Purpose	Operational Duration	Environmental Conditions	Qualification Process	Seismic Category	Comments
			(PCCV, R/B, A/B, O/B,T/B, UHSRS)	RT, ESF, PAM, PB, Other		Harsh or Mild	E=Electrical M=Mechanical	I, II, Non	
139	NCS-PT-1220	A - Component Cooling Water Header Pressure	R/B	PAM, Other	2wks	Mild	E	I	
140	NCS-PT-1221	B - Component Cooling Water Header Pressure	R/B	PAM, Other	2wks	Mild	E	I	
141	NCS-PT-1222	C - Component Cooling Water Header Pressure	R/B	PAM, Other	2wks	Mild	E	I	
142	NCS-PT-1223	D - Component Cooling Water Header Pressure	R/B	PAM, Other	2wks	Mild	E	I	
143	EWS-FT-2024	A - Component Cooling Water Heat Exchanger Essential Service Water Flow	R/B	Other	36hr	Mild	E	I	
144	EWS-FT-2025	B - Component Cooling Water Heat Exchanger Essential Service Water Flow	R/B	Other	36hr	Mild	E	I	
145	EWS-FT-2026	C - Component Cooling Water Heat Exchanger Essential Service Water Flow	R/B	Other	36hr	Mild	E	I	
146	EWS-FT-2027	D - Component Cooling Water Heat Exchanger Essential Service Water Flow	R/B	Other	36hr	Mild	E	I	
147	EWS-PT-2005	A - Essential Service Water Header Pressure	R/B	PAM, Other	2wks	Mild	E	I	
148	EWS-PT-2006	B - Essential Service Water Header Pressure	R/B	PAM, Other	2wks	Mild	E	I	
149	EWS-PT-2007	C - Essential Service Water Header Pressure	R/B	PAM, Other	2wks	Mild	E	I	
150	EWS-PT-2008	D - Essential Service Water Header Pressure	R/B	PAM, Other	2wks	Mild	E	I	
151	RWS-LT-1400	Refueling Water Storage Pit Water Level (Narrow Range)	PCCV	PAM	1yr	Harsh	E	I	
152	RWS-LT-1401	Refueling Water Storage Pit Water Level (Wide Range)	PCCV	PAM, Other	1yr	Harsh	E	I	
153	RWS-LT-1402	Refueling Water Storage Pit Water Level (Narrow Range)	PCCV	PAM	1yr	Harsh	E	I	
154	RWS-LT-1403	Refueling Water Storage Pit Water Level (Wide Range)	PCCV	PAM, Other	1yr	Harsh	E	I	

Table 3D-2 US-APWR Environmental Qualification Equipment List
(Sheet 8 of 57)

Item Num	Equipment Tag	Description	Location	Purpose	Operational Duration	Environmental Conditions	Qualification Process	Seismic Category	Comments
			(PCCV, R/B, A/B, O/B,T/B, UHSRS)	RT, ESF, PAM, PB, Other		Harsh or Mild	E=Electrical M=Mechanical	I, II, Non	
Instruments (Resistance Temperature Detectors)									
1	RCS-TE-410	Loop A - Reactor Coolant Hot Leg Temperature (Wide Range)	PCCV	PAM, Other	1yr	Harsh	E	I	
2	RCS-TE-411A	Loop A - Reactor Coolant Hot Leg Temperature (Narrow Range)	PCCV	RT	5min	Harsh	E	I	
3	RCS-TE-411B	Loop A - Reactor Coolant Hot Leg Temperature (Narrow Range)	PCCV	RT	5min	Harsh	E	I	
4	RCS-TE-411C	Loop A - Reactor Coolant Hot Leg Temperature (Narrow Range)	PCCV	RT	5min	Harsh	E	I	
5	RCS-TE-411D	Loop A - Reactor Coolant Cold Leg Temperature (Narrow Range)	PCCV	RT	5min	Harsh	E	I	
6	RCS-TE-413A	Loop A - Reactor Coolant Hot Leg Temperature (Narrow Range) (spare)	PCCV	RT	5min	Harsh	E	I	
7	RCS-TE-413B	Loop A - Reactor Coolant Hot Leg Temperature (Narrow Range) (spare)	PCCV	RT	5min	Harsh	E	I	
8	RCS-TE-413C	Loop A - Reactor Coolant Hot Leg Temperature (Narrow Range) (spare)	PCCV	RT	5min	Harsh	E	I	
9	RCS-TE-413D	Loop A - Reactor Coolant Cold Leg Temperature (Narrow Range) (spare)	PCCV	RT	5min	Harsh	E	I	
10	RCS-TE-415	Loop A - Reactor Coolant Cold Leg Temperature (Wide Range)	PCCV	PAM, Other	1yr	Harsh	E	I	
11	RCS-TE-420	Loop B - Reactor Coolant Hot Leg Temperature (Wide Range)	PCCV	PAM, Other	1yr	Harsh	E	I	
12	RCS-TE-421A	Loop B - Reactor Coolant Hot Leg Temperature (Narrow Range)	PCCV	RT	5min	Harsh	E	I	
13	RCS-TE-421B	Loop B - Reactor Coolant Hot Leg Temperature (Narrow Range)	PCCV	RT	5min	Harsh	E	I	
14	RCS-TE-421C	Loop B - Reactor Coolant Hot Leg Temperature (Narrow Range)	PCCV	RT	5min	Harsh	E	I	
15	RCS-TE-421D	Loop B - Reactor Coolant Cold Leg Temperature (Narrow Range)	PCCV	RT	5min	Harsh	E	I	
16	RCS-TE-423A	Loop B - Reactor Coolant Hot Leg Temperature (Narrow Range) (spare)	PCCV	RT	5min	Harsh	E	I	
17	RCS-TE-423B	Loop B - Reactor Coolant Hot Leg Temperature (Narrow Range) (spare)	PCCV	RT	5min	Harsh	E	I	
18	RCS-TE-423C	Loop B - Reactor Coolant Hot Leg Temperature (Narrow Range) (spare)	PCCV	RT	5min	Harsh	E	I	

Table 3D-2 US-APWR Environmental Qualification Equipment List
(Sheet 9 of 57)

Item Num	Equipment Tag	Description	Location	Purpose	Operational Duration	Environmental Conditions	Qualification Process	Seismic Category	Comments
			(PCCV, R/B, A/B, O/B,T/B, UHSRS)	RT, ESF, PAM, PB, Other		Harsh or Mild	E=Electrical M=Mechanical	I, II, Non	
19	RCS-TE-423D	Loop B - Reactor Coolant Cold Leg Temperature (Narrow Range) (spare)	PCCV	RT	5min	Harsh	E	I	
20	RCS-TE-425	Loop B - Reactor Coolant Cold Leg Temperature (Wide Range)	PCCV	PAM, Other	1yr	Harsh	E	I	
21	RCS-TE-430	Loop C - Reactor Coolant Hot Leg Temperature (Wide Range)	PCCV	PAM, Other	1yr	Harsh	E	I	
22	RCS-TE-431A	Loop C - Reactor Coolant Hot Leg Temperature (Narrow Range)	PCCV	RT	5min	Harsh	E	I	
23	RCS-TE-431B	Loop C - Reactor Coolant Hot Leg Temperature (Narrow Range)	PCCV	RT	5min	Harsh	E	I	
24	RCS-TE-431C	Loop C - Reactor Coolant Hot Leg Temperature (Narrow Range)	PCCV	RT	5min	Harsh	E	I	
25	RCS-TE-431D	Loop C - Reactor Coolant Cold Leg Temperature (Narrow Range)	PCCV	RT	5min	Harsh	E	I	
26	RCS-TE-433A	Loop C - Reactor Coolant Hot Leg Temperature (Narrow Range) (spare)	PCCV	RT	5min	Harsh	E	I	
27	RCS-TE-433B	Loop C - Reactor Coolant Hot Leg Temperature (Narrow Range) (spare)	PCCV	RT	5min	Harsh	E	I	
28	RCS-TE-433C	Loop C - Reactor Coolant Hot Leg Temperature (Narrow Range) (spare)	PCCV	RT	5min	Harsh	E	I	
29	RCS-TE-433D	Loop C - Reactor Coolant Cold Leg Temperature (Narrow Range) (spare)	PCCV	RT	5min	Harsh	E	I	
30	RCS-TE-435	Loop C - Reactor Coolant Cold Leg Temperature (Wide Range)	PCCV	PAM, Other	1yr	Harsh	E	I	
31	RCS-TE-440	Loop D - Reactor Coolant Hot Leg Temperature (Wide Range)	PCCV	PAM, Other	1yr	Harsh	E	I	
32	RCS-TE-441A	Loop D - Reactor Coolant Hot Leg Temperature (Narrow Range)	PCCV	RT	5min	Harsh	E	I	
33	RCS-TE-441B	Loop D - Reactor Coolant Hot Leg Temperature (Narrow Range)	PCCV	RT	5min	Harsh	E	I	
34	RCS-TE-441C	Loop D - Reactor Coolant Hot Leg Temperature (Narrow Range)	PCCV	RT	5min	Harsh	E	I	
35	RCS-TE-441D	Loop D - Reactor Coolant Cold Leg Temperature (Narrow Range)	PCCV	RT	5min	Harsh	E	I	
36	RCS-TE-443A	Loop D - Reactor Coolant Hot Leg Temperature (Narrow Range) (spare)	PCCV	RT	5min	Harsh	E	I	
37	RCS-TE-443B	Loop D - Reactor Coolant Hot Leg Temperature (Narrow Range) (spare)	PCCV	RT	5min	Harsh	E	I	
38	RCS-TE-443C	Loop D - Reactor Coolant Hot Leg Temperature (Narrow Range) (spare)	PCCV	RT	5min	Harsh	E	I	

Table 3D-2 US-APWR Environmental Qualification Equipment List
(Sheet 10 of 57)

Item Num	Equipment Tag	Description	Location	Purpose	Operational Duration	Environmental Conditions	Qualification Process	Seismic Category	Comments
			(PCCV, R/B, A/B, O/B,T/B, UHSRS)	RT, ESF, PAM, PB, Other		Harsh or Mild	E=Electrical M=Mechanical	I, II, Non	
39	RCS-TE-443D	Loop D - Reactor Coolant Cold Leg Temperature (Narrow Range) (spare)	PCCV	RT	5min	Harsh	E	I	
40	RCS-TE-445	Loop D - Reactor Coolant Cold Leg Temperature (Wide Range)	PCCV	PAM, Other	1yr	Harsh	E	I	
41	RHS-TE-604	A - Containment Spray / Residual Heat Removal Heat Exhanger Outlet Temperature	R/B	Other	36hr	Mild	E	I	
42	RHS-TE-614	B - Containment Spray / Residual Heat Removal Heat Exhanger Outlet Temperature	R/B	Other	36hr	Mild	E	I	
43	RHS-TE-624	C - Containment Spray / Residual Heat Removal Heat Exhanger Outlet Temperature	R/B	Other	36hr	Mild	E	I	
44	RHS-TE-634	D - Containment Spray / Residual Heat Removal Heat Exhanger Outlet Temperature	R/B	Other	36hr	Mild	E	I	
45	CSS-TE-1990	Containment Temperature	PCCV	PAM	1yr	Harsh	E	I	
46	NCS-TE-1215	A - Component Cooling Water Supply Temperature	R/B	Other	36hr	Mild	E	I	
47	NCS-TE-1216	B - Component Cooling Water Supply Temperature	R/B	Other	36hr	Mild	E	I	
48	NCS-TE-1217	C - Component Cooling Water Supply Temperature	R/B	Other	36hr	Mild	E	I	
49	NCS-TE-1218	D - Component Cooling Water Supply Temperature	R/B	Other	36hr	Mild	E	I	
Instruments (Speed Sensors)									
1	RCS-SE-418A	A - Reactor Coolant Pump Speed	PCCV	RT	5min*	Harsh	E	I	*Not required post accident
2	RCS-SE-418B	A - Reactor Coolant Pump Speed (spare)	PCCV	RT	5min*	Harsh	E	I	*Not required post accident
3	RCS-SE-428A	B - Reactor Coolant Pump Speed	PCCV	RT	5min*	Harsh	E	I	*Not required post accident
4	RCS-SE-428B	B - Reactor Coolant Pump Speed (spare)	PCCV	RT	5min*	Harsh	E	I	*Not required post accident
5	RCS-SE-438A	C - Reactor Coolant Pump Speed	PCCV	RT	5min*	Harsh	E	I	*Not required post accident
6	RCS-SE-438B	C - Reactor Coolant Pump Speed (spare)	PCCV	RT	5min*	Harsh	E	I	*Not required post accident

Table 3D-2 US-APWR Environmental Qualification Equipment List
(Sheet 11 of 57)

Item Num	Equipment Tag	Description	Location	Purpose	Operational Duration	Environmental Conditions	Qualification Process	Seismic Category	Comments
			(PCCV, R/B, A/B, O/B,T/B, UHSRS)	RT, ESF, PAM, PB, Other		Harsh or Mild	E=Electrical M=Mechanical	I, II, Non	
7	RCS-SE-448A	D - Reactor Coolant Pump Speed	PCCV	RT	5min*	Harsh	E	I	*Not required post accident
8	RCS-SE-448B	D - Reactor Coolant Pump Speed (spare)	PCCV	RT	5min*	Harsh	E	I	*Not required post accident
Instruments (Neutron Detectors)									
1	CIS-NE-31	Source Range Neutron Flux	PCCV	RT, Other	36hr*	Harsh	E	I	*Not required post accident
2	CIS-NE-32	Source Range Neutron Flux	PCCV	RT, Other	36hr*	Harsh	E	I	*Not required post accident
3	CIS-NE-35	Intermediate Range Neutron Flux	PCCV	RT	5min*	Harsh	E	I	*Not required post accident
4	CIS-NE-36	Intermediate Range Neutron Flux	PCCV	RT	5min*	Harsh	E	I	*Not required post accident
5	CIS-NE-41A	Power Range Neutron Flux (Upper)	PCCV	RT	5min*	Harsh	E	I	*Not required post accident
6	CIS-NE-41B	Power Range Neutron Flux (Lower)	PCCV	RT	5min*	Harsh	E	I	*Not required post accident
7	CIS-NE-42A	Power Range Neutron Flux (Upper)	PCCV	RT	5min*	Harsh	E	I	*Not required post accident
8	CIS-NE-42B	Power Range Neutron Flux (Lower)	PCCV	RT	5min*	Harsh	E	I	*Not required post accident
9	CIS-NE-43A	Power Range Neutron Flux (Upper)	PCCV	RT	5min*	Harsh	E	I	*Not required post accident
10	CIS-NE-43B	Power Range Neutron Flux (Lower)	PCCV	RT	5min*	Harsh	E	I	*Not required post accident
11	CIS-NE-44A	Power Range Neutron Flux (Upper)	PCCV	RT	5min*	Harsh	E	I	*Not required post accident
12	CIS-NE-44B	Power Range Neutron Flux (Lower)	PCCV	RT	5min*	Harsh	E	I	*Not required post accident
13	CIS-NE-33	Wide Range Neutron Flux	PCCV	PAM	1yr	Harsh	E	I	
14	CIS-NE-34	Wide Range Neutron Flux	PCCV	PAM	1yr	Harsh	E	I	
Instruments (Thermocouples)									
1	RCS-LE-571	Reactor Vessel Water Level	PCCV	PAM	1yr	Harsh	E	I	Heated Junction Thermocouples
2	RCS-LE-572	Reactor Vessel Water Level	PCCV	PAM	1yr	Harsh	E	I	Heated Junction Thermocouples
3	CIS-TE-01	Core Exit Temperature	PCCV	PAM	1yr	Harsh	E	I	

Table 3D-2 US-APWR Environmental Qualification Equipment List
(Sheet 12 of 57)

Item Num	Equipment Tag	Description	Location	Purpose	Operational Duration	Environmental Conditions	Qualification Process	Seismic Category	Comments
			(PCCV, R/B, A/B, O/B,T/B, UHSRS)	RT, ESF, PAM, PB, Other		Harsh or Mild	E=Electrical M=Mechanical	I, II, Non	
4	CIS-TE-02	Core Exit Temperature	PCCV	PAM	1yr	Harsh	E	I	
5	CIS-TE-03	Core Exit Temperature	PCCV	PAM	1yr	Harsh	E	I	
6	CIS-TE-04	Core Exit Temperature	PCCV	PAM	1yr	Harsh	E	I	
7	CIS-TE-05	Core Exit Temperature	PCCV	PAM	1yr	Harsh	E	I	
8	CIS-TE-06	Core Exit Temperature	PCCV	PAM	1yr	Harsh	E	I	
9	CIS-TE-07	Core Exit Temperature	PCCV	PAM	1yr	Harsh	E	I	
10	CIS-TE-08	Core Exit Temperature	PCCV	PAM	1yr	Harsh	E	I	
11	CIS-TE-09	Core Exit Temperature	PCCV	PAM	1yr	Harsh	E	I	
12	CIS-TE-10	Core Exit Temperature	PCCV	PAM	1yr	Harsh	E	I	
13	CIS-TE-11	Core Exit Temperature	PCCV	PAM	1yr	Harsh	E	I	
14	CIS-TE-12	Core Exit Temperature	PCCV	PAM	1yr	Harsh	E	I	
15	CIS-TE-13	Core Exit Temperature	PCCV	PAM	1yr	Harsh	E	I	
16	CIS-TE-14	Core Exit Temperature	PCCV	PAM	1yr	Harsh	E	I	
17	CIS-TE-15	Core Exit Temperature	PCCV	PAM	1yr	Harsh	E	I	
18	CIS-TE-16	Core Exit Temperature	PCCV	PAM	1yr	Harsh	E	I	
19	CIS-TE-17	Core Exit Temperature	PCCV	PAM	1yr	Harsh	E	I	
20	CIS-TE-18	Core Exit Temperature	PCCV	PAM	1yr	Harsh	E	I	
21	CIS-TE-19	Core Exit Temperature	PCCV	PAM	1yr	Harsh	E	I	
22	CIS-TE-20	Core Exit Temperature	PCCV	PAM	1yr	Harsh	E	I	
23	CIS-TE-21	Core Exit Temperature	PCCV	PAM	1yr	Harsh	E	I	
24	CIS-TE-22	Core Exit Temperature	PCCV	PAM	1yr	Harsh	E	I	
25	CIS-TE-23	Core Exit Temperature	PCCV	PAM	1yr	Harsh	E	I	
26	CIS-TE-24	Core Exit Temperature	PCCV	PAM	1yr	Harsh	E	I	
27	CIS-TE-25	Core Exit Temperature	PCCV	PAM	1yr	Harsh	E	I	
28	CIS-TE-26	Core Exit Temperature	PCCV	PAM	1yr	Harsh	E	I	
Instruments (Radiation Monitors)									
1	RMS-RE-83A	Main Control Room Outside Air Intake Particulate Radiation	R/B	ESF	30min	Mild	E	I	
2	RMS-RE-83B	Main Control Room Outside Air Intake Particulate Radiation	R/B	ESF	30min	Mild	E	I	

Table 3D-2 US-APWR Environmental Qualification Equipment List
(Sheet 13 of 57)

Item Num	Equipment Tag	Description	Location	Purpose	Operational Duration	Environmental Conditions	Qualification Process	Seismic Category	Comments
			(PCCV, R/B, A/B, O/B,T/B, UHSRS)	RT, ESF, PAM, PB, Other		Harsh or Mild	E=Electrical M=Mechanical	I, II, Non	
3	RMS-RE-84A	Main Control Room Outside Air Intake Gas Radiation	R/B	ESF	30min	Mild	E	I	
4	RMS-RE-84B	Main Control Room Outside Air Intake Gas Radiation	R/B	ESF	30min	Mild	E	I	
5	RMS-RE-85A	Main Control Room Outside Air Intake Iodine Radiation	R/B	ESF	30min	Mild	E	I	
6	RMS-RE-85B	Main Control Room Outside Air Intake Iodine Radiation	R/B	ESF	30min	Mild	E	I	
7	RMS-RE-91	Containment High Range Area Radiation	PCCV	ESF PAM	1yr	Harsh	E	I	
8	RMS-RE-92	Containment High Range Area Radiation	PCCV	ESF PAM	1yr	Harsh	E	I	
9	RMS-RE-93	Containment High Range Area Radiation	PCCV	ESF PAM	1yr	Harsh	E	I	
10	RMS-RE-94	Containment High Range Area Radiation	PCCV	ESF PAM	1yr	Harsh	E	I	
Instruments (Switches)									
1	VRS-TS-2330	A - Penetration Area Temperature	R/B	Other	1yr	Mild	E	I	
2	VRS-TS-2333	A - Penetration Area Temperature	R/B	Other	1yr	Mild	E	I	
3	VRS-TS-2334	A - Penetration Area Temperature	R/B	Other	1yr	Mild	E	I	
4	VRS-TS-2335	B - Penetration Area Temperature	R/B	Other	1yr	Mild	E	I	
5	VRS-TS-2338	B - Penetration Area Temperature	R/B	Other	1yr	Mild	E	I	
6	VRS-TS-2339	B - Penetration Area Temperature	R/B	Other	1yr	Mild	E	I	
7	VRS-TS-2340	C - Penetration Area Temperature	R/B	Other	1yr	Mild	E	I	
8	VRS-TS-2343	C - Penetration Area Temperature	R/B	Other	1yr	Mild	E	I	
9	VRS-TS-2344	C - Penetration Area Temperature	R/B	Other	1yr	Mild	E	I	
10	VRS-TS-2345	D - Penetration Area Temperature	R/B	Other	1yr	Mild	E	I	

Table 3D-2 US-APWR Environmental Qualification Equipment List
(Sheet 14 of 57)

Item Num	Equipment Tag	Description	Location	Purpose	Operational Duration	Environmental Conditions	Qualification Process	Seismic Category	Comments
			(PCCV, R/B, A/B, O/B,T/B, UHSRS)	RT, ESF, PAM, PB, Other		Harsh or Mild	E=Electrical M=Mechanical	I, II, Non	
11	VRS-TS-2348	D - Penetration Area Temperature	R/B	Other	1yr	Mild	E	I	
12	VRS-TS-2349	D - Penetration Area Temperature	R/B	Other	1yr	Mild	E	I	
13	VRS-TS-2572	A - Safeguard Component Area Temperature	R/B	Other	1yr	Mild	E	I	
14	VRS-TS-2573	A - Safeguard Component Area Temperature	R/B	Other	1yr	Mild	E	I	
15	VRS-TS-2575	A - Safeguard Component Area Temperature	R/B	Other	1yr	Mild	E	I	
16	VRS-TS-2582	B - Safeguard Component Area Temperature	R/B	Other	1yr	Mild	E	I	
17	VRS-TS-2583	B - Safeguard Component Area Temperature	R/B	Other	1yr	Mild	E	I	
18	VRS-TS-2585	B - Safeguard Component Area Temperature	R/B	Other	1yr	Mild	E	I	
19	VRS-TS-2592	C - Safeguard Component Area Temperature	R/B	Other	1yr	Mild	E	I	
20	VRS-TS-2593	C - Safeguard Component Area Temperature	R/B	Other	1yr	Mild	E	I	
21	VRS-TS-2595	C - Safeguard Component Area Temperature	R/B	Other	1yr	Mild	E	I	
22	VRS-TS-2602	D - Safeguard Component Area Temperature	R/B	Other	1yr	Mild	E	I	
23	VRS-TS-2603	D - Safeguard Component Area Temperature	R/B	Other	1yr	Mild	E	I	
24	VRS-TS-2605	D - Safeguard Component Area Temperature	R/B	Other	1yr	Mild	E	I	
25	VRS-TS-2670	A - Emergency Feedwater Pump Area Temperature	R/B	Other	2wks	Mild	E	I	
26	VRS-TS-2673	A - Emergency Feedwater Pump Area Temperature	R/B	Other	2wks	Mild	E	I	
27	VRS-TS-2674	A - Emergency Feedwater Pump Area Temperature	R/B	Other	2wks	Mild	E	I	
28	VRS-TS-2675	B - Emergency Feedwater Pump Area Temperature	R/B	Other	2wks	Mild	E	I	
29	VRS-TS-2678	B - Emergency Feedwater Pump Area Temperature	R/B	Other	2wks	Mild	E	I	
30	VRS-TS-2679	B - Emergency Feedwater Pump Area Temperature	R/B	Other	2wks	Mild	E	I	

Table 3D-2 US-APWR Environmental Qualification Equipment List
(Sheet 15 of 57)

Item Num	Equipment Tag	Description	Location	Purpose	Operational Duration	Environmental Conditions	Qualification Process	Seismic Category	Comments
			(PCCV, R/B, A/B, O/B,T/B, UHSRS)	RT, ESF, PAM, PB, Other		Harsh or Mild	E=Electrical M=Mechanical	I, II, Non	
31	VRS-TS-2680	C - Emergency Feedwater Pump Area Temperature	R/B	Other	2wks	Mild	E	I	
32	VRS-TS-2683	C - Emergency Feedwater Pump Area Temperature	R/B	Other	2wks	Mild	E	I	
33	VRS-TS-2684	C - Emergency Feedwater Pump Area Temperature	R/B	Other	2wks	Mild	E	I	
34	VRS-TS-2685	D - Emergency Feedwater Pump Area Temperature	R/B	Other	2wks	Mild	E	I	
35	VRS-TS-2688	D - Emergency Feedwater Pump Area Temperature	R/B	Other	2wks	Mild	E	I	
36	VRS-TS-2689	D - Emergency Feedwater Pump Area Temperature	R/B	Other	2wks	Mild	E	I	
37	VRS-TS-2720A	A - Component Cooling Water Pump Area Temperature	R/B	Other	2wks	Mild	E	I	
38	VRS-TS-2723A	A - Component Cooling Water Pump Area Temperature	R/B	Other	2wks	Mild	E	I	
39	VRS-TS-2724A	A - Component Cooling Water Pump Area Temperature	R/B	Other	2wks	Mild	E	I	
40	VRS-TS-2720B	B - Component Cooling Water Pump Area Temperature	R/B	Other	2wks	Mild	E	I	
41	VRS-TS-2723B	B - Component Cooling Water Pump Area Temperature	R/B	Other	2wks	Mild	E	I	
42	VRS-TS-2724B	B - Component Cooling Water Pump Area Temperature	R/B	Other	2wks	Mild	E	I	
43	VRS-TS-2720C	C - Component Cooling Water Pump Area Temperature	R/B	Other	2wks	Mild	E	I	
44	VRS-TS-2723C	C - Component Cooling Water Pump Area Temperature	R/B	Other	2wks	Mild	E	I	
45	VRS-TS-2724C	C - Component Cooling Water Pump Area Temperature	R/B	Other	2wks	Mild	E	I	
46	VRS-TS-2720D	D - Component Cooling Water Pump Area Temperature	R/B	Other	2wks	Mild	E	I	
47	VRS-TS-2723D	D - Component Cooling Water Pump Area Temperature	R/B	Other	2wks	Mild	E	I	
48	VRS-TS-2724D	D - Component Cooling Water Pump Area Temperature	R/B	Other	2wks	Mild	E	I	
49	VRS-TS-2725A	A - Essential Chiller Unit Area Temperature	R/B	Other	2wks	Mild	E	I	

Table 3D-2 US-APWR Environmental Qualification Equipment List
(Sheet 16 of 57)

Item Num	Equipment Tag	Description	Location	Purpose	Operational Duration	Environmental Conditions	Qualification Process	Seismic Category	Comments
			(PCCV, R/B, A/B, O/B,T/B, UHSRS)	RT, ESF, PAM, PB, Other		Harsh or Mild	E=Electrical M=Mechanical	I, II, Non	
50	VRS-TS-2728A	A - Essential Chiller Unit Area Temperature	R/B	Other	2wks	Mild	E	I	
51	VRS-TS-2729A	A - Essential Chiller Unit Area Temperature	R/B	Other	2wks	Mild	E	I	
52	VRS-TS-2725B	B - Essential Chiller Unit Area Temperature	R/B	Other	2wks	Mild	E	I	
53	VRS-TS-2728B	B - Essential Chiller Unit Area Temperature	R/B	Other	2wks	Mild	E	I	
54	VRS-TS-2729B	B - Essential Chiller Unit Area Temperature	R/B	Other	2wks	Mild	E	I	
55	VRS-TS-2725C	C - Essential Chiller Unit Area Temperature	R/B	Other	2wks	Mild	E	I	
56	VRS-TS-2728C	C - Essential Chiller Unit Area Temperature	R/B	Other	2wks	Mild	E	I	
57	VRS-TS-2729C	C - Essential Chiller Unit Area Temperature	R/B	Other	2wks	Mild	E	I	
58	VRS-TS-2725D	D - Essential Chiller Unit Area Temperature	R/B	Other	2wks	Mild	E	I	
59	VRS-TS-2728D	D - Essential Chiller Unit Area Temperature	R/B	Other	2wks	Mild	E	I	
60	VRS-TS-2729D	D - Essential Chiller Unit Area Temperature	R/B	Other	2wks	Mild	E	I	
61	VRS-TS-2730	A - Charging Pump Area Temperature	R/B	Other	2wks	Mild	E	I	
62	VRS-TS-2733	A - Charging Pump Area Temperature	R/B	Other	2wks	Mild	E	I	
63	VRS-TS-2734	A - Charging Pump Area Temperature	R/B	Other	2wks	Mild	E	I	
64	VRS-TS-2735	B - Charging Pump Area Temperature	R/B	Other	2wks	Mild	E	I	
65	VRS-TS-2738	B - Charging Pump Area Temperature	R/B	Other	2wks	Mild	E	I	
66	VRS-TS-2739	B - Charging Pump Area Temperature	R/B	Other	2wks	Mild	E	I	
67	VRS-TS-2740	A - Annulus Emergency Exhaust Filtration Unit Area Temperature	R/B	Other	1yr	Mild	E	I	
68	VRS-TS-2743	A - Annulus Emergency Exhaust Filtration Unit Area Temperature	R/B	Other	1yr	Mild	E	I	
69	VRS-TS-2744	A - Annulus Emergency Exhaust Filtration Unit Area Temperature	R/B	Other	1yr	Mild	E	I	

Table 3D-2 US-APWR Environmental Qualification Equipment List
(Sheet 17 of 57)

Item Num	Equipment Tag	Description	Location	Purpose	Operational Duration	Environmental Conditions	Qualification Process	Seismic Category	Comments
			(PCCV, R/B, A/B, O/B,T/B, UHSRS)	RT, ESF, PAM, PB, Other		Harsh or Mild	E=Electrical M=Mechanical	I, II, Non	
70	VRS-TS-2745	B - Annulus Emergency Exhaust Filtration Unit Area Temperature	R/B	Other	1yr	Mild	E	I	
71	VRS-TS-2748	B - Annulus Emergency Exhaust Filtration Unit Area Temperature	R/B	Other	1yr	Mild	E	I	
72	VRS-TS-2749	B - Annulus Emergency Exhaust Filtration Unit Area Temperature	R/B	Other	1yr	Mild	E	I	
73	VRS-TS-2787	A - Class 1E Electrical Room Temperature	R/B	Other	2wks	Mild	E	I	
74	VRS-TS-2797	B - Class 1E Electrical Room Temperature	R/B	Other	2wks	Mild	E	I	
75	VRS-TS-2807	C - Class 1E Electrical Room Temperature	R/B	Other	2wks	Mild	E	I	
76	VRS-TS-2817	D - Class 1E Electrical Room Temperature	R/B	Other	2wks	Mild	E	I	
77	VRS-TS-2849	Main Control Room Temperature	R/B	Other	2wks	Mild	E	I	
78	VRS-TS-2859	Main Control Room Temperature	R/B	Other	2wks	Mild	E	I	
79	VRS-TS-2869	Main Control Room Temperature	R/B	Other	2wks	Mild	E	I	
80	VRS-TS-2879	Main Control Room Temperature	R/B	Other	2wks	Mild	E	I	
Cables									
1	N/A	Optical Cable	R/B	RT,ESF,PAM	1yr	Mild	E	I	
2	N/A	Instrumentation Cable (Harsh Specification)	PCCV, R/B	RT,ESF,PAM	1yr	Harsh	E	I	
3	N/A	Instrumentation Cable (Mild Specification)	R/B	RT,ESF,PAM	1yr	Mild	E	I	
4	N/A	Control Cable (Harsh Specification)	PCCV, R/B	ESF,PAM	1yr	Harsh	E	I	
5	N/A	Control Cable (Mild Specification)	R/B	RT,ESF,PAM	1yr	Mild	E	I	
6	N/A	Medium Voltage Power Cable (Harsh Specification)	PCCV, R/B	ESF	30min	Harsh	E	I	
7	N/A	Medium Voltage Power Cable (Mild Specification)	R/B	ESF	30min	Mild	E	I	

Table 3D-2 US-APWR Environmental Qualification Equipment List
(Sheet 18 of 57)

Item Num	Equipment Tag	Description	Location	Purpose	Operational Duration	Environmental Conditions	Qualification Process	Seismic Category	Comments
			(PCCV, R/B, A/B, O/B,T/B, UHSRS)	RT, ESF, PAM, PB, Other		Harsh or Mild	E=Electrical M=Mechanical	I, II, Non	
8	N/A	Low Voltage Power Cable (Harsh Specification)	PCCV, R/B	ESF	30min	Harsh	E	I	
9	N/A	Low Voltage Power Cable (Mild Specification)	R/B	ESF	30min	Mild	E	I	
10	N/A	Other Specific Cables	PCCV, R/B	RT,ESF,PAM	1yr	Harsh	E	I	
11	N/A	Other Specific Cables	R/B	RT,ESF,PAM	1yr	Mild	E	I	
Electrical Component									
1	A-EGTG	A-Class 1E Gas Turbine Generator	PS/B	ESF	2wks	Mild	E	I	
2	B-EGTG	B-Class 1E Gas Turbine Generator	PS/B	ESF	2wks	Mild	E	I	
3	C-EGTG	C-Class 1E Gas Turbine Generator	PS/B	ESF	2wks	Mild	E	I	
4	D-EGTG	D-Class 1E Gas Turbine Generator	PS/B	ESF	2wks	Mild	E	I	
5		Containment Electrical Penetration	PCCV	RT, ESF, PAM, PB	1yr	Harsh	E, M	I	
6		Raceway(Tray, Conduit)	PCCV, R/B, PS/B	RT, ESF, PAM	1yr	Harsh/Mild	M	I	
Electrical Cabinet									
1	OC	Operator Console	R/B	RT, ESF, PAM	2wks	Mild	E	I	
2	RPS-A	A-Reactor Protection System Cabinet	R/B	RT, ESF, PAM	2wks	Mild	E	I	
3	EFS-A	A-ESF Actuation System Cabinet	R/B	ESF	2wks	Mild	E	I	
4	SVP-A	A-Safety VDU Processor Cabinet	R/B	RT, ESF, PAM	2wks	Mild	E	I	
5	SLS-A	A-Safety Logic System Cabinet	R/B	ESF, PAM	2wks	Mild	E	I	

Table 3D-2 US-APWR Environmental Qualification Equipment List
(Sheet 19 of 57)

Item Num	Equipment Tag	Description	Location	Purpose	Operational Duration	Environmental Conditions	Qualification Process	Seismic Category	Comments
			(PCCV, R/B, A/B, O/B,T/B, UHSRS)	RT, ESF, PAM, PB, Other		Harsh or Mild	E=Electrical M=Mechanical	I, II, Non	
6	RPS-B	B-Reactor Protection System Cabinet	R/B	RT, ESF, PAM	2wks	Mild	E	I	
7	EFS-B	B-ESF Actuation System Cabinet	R/B	ESF	2wks	Mild	E	I	
8	SVP-B	B-Safety VDU Processor Cabinet	R/B	RT, ESF, PAM	2wks	Mild	E	I	
9	SLS-B	B-Safety Logic System Cabinet	R/B	ESF, PAM	2wks	Mild	E	I	
10	RPS-C	C-Reactor Protection System Cabinet	R/B	RT, ESF, PAM	2wks	Mild	E	I	
11	EFS-C	C-ESF Actuation System Cabinet	R/B	ESF	2wks	Mild	E	I	
12	SVP-C	C-Safety VDU Processor Cabinet	R/B	RT, ESF, PAM	2wks	Mild	E	I	
13	SLS-C	C-Safety Logic System Cabinet	R/B	ESF, PAM	2wks	Mild	E	I	
14	RPS-D	D-Reactor Protection System Cabinet	R/B	RT, ESF, PAM	2wks	Mild	E	I	
15	EFS-D	D-ESF Actuation System Cabinet	R/B	ESF	2wks	Mild	E	I	
16	SVP-D	D-Safety VDU Processor Cabinet	R/B	RT, ESF, PAM	2wks	Mild	E	I	
17	SLS-D	D-Safety Logic System Cabinet	R/B	ESF, PAM	2wks	Mild	E	I	
18	MC-A	A-Class 1E 6.9kV Switchgear	R/B	ESF	2wks	Mild	E	I	
19	LC-A	A-Class 1E 480V Load Center	R/B	ESF	2wks	Mild	E	I	
20	MCC-A	A-Class 1E Motor Control Center	R/B	ESF	2wks	Mild	E	I	
21	MCC-A1	A1-Class 1E Motor Control Center	R/B	ESF	2wks	Mild	E	I	

Table 3D-2 US-APWR Environmental Qualification Equipment List
(Sheet 20 of 57)

Item Num	Equipment Tag	Description	Location	Purpose	Operational Duration	Environmental Conditions	Qualification Process	Seismic Category	Comments
			(PCCV, R/B, A/B, O/B,T/B, UHSRS)	RT, ESF, PAM, PB, Other		Harsh or Mild	E=Electrical M=Mechanical	I, II, Non	
22	RIO-A	A-Safety Remote I/O Cabinet	R/B	ESF, PAM	2wks	Mild	E	I	
23	PBH-A	A-Pressurizer Heater Distribution Panel	R/B	ESF	2wks	Mild	E	I	
24	RPTS-A	A-RCP Trip Switchgear	R/B	Other	2wks	Mild	E	I	
25	MC-B	B-Class 1E 6.9kV Switchgear	R/B	ESF	2wks	Mild	E	I	
26	LC-B	B-Class 1E 480V Load Center	R/B	ESF	2wks	Mild	E	I	
27	MCC-B	B-Class 1E Motor Control Center	R/B	ESF	2wks	Mild	E	I	
28	RIO-B	B-Safety Remote I/O Cabinet	R/B	ESF, PAM	2wks	Mild	E	I	
29	PBH-B	B-Pressurizer Heater Distribution Panel	R/B	ESF	2wks	Mild	E	I	
30	RPTS-B	B-RCP Trip Switchgear	R/B	Other	2wks	Mild	E	I	
31	MC-C	C-Class 1E 6.9kV Switchgear	R/B	ESF	2wks	Mild	E	I	
32	LC-C	C-Class 1E 480V Load Center	R/B	ESF	2wks	Mild	E	I	
33	MCC-C	C-Class 1E Motor Control Center	R/B	ESF	2wks	Mild	E	I	
34	RIO-C	C-Safety Remote I/O Cabinet	R/B	ESF, PAM	2wks	Mild	E	I	
35	PBH-C	C-Pressurizer Heater Distribution Panel	R/B	ESF	2wks	Mild	E	I	
36	RPTS-C	C-RCP Trip Switchgear	R/B	Other	2wks	Mild	E	I	

Table 3D-2 US-APWR Environmental Qualification Equipment List
(Sheet 21 of 57)

Item Num	Equipment Tag	Description	Location	Purpose	Operational Duration	Environmental Conditions	Qualification Process	Seismic Category	Comments
			(PCCV, R/B, A/B, O/B,T/B, UHSRS)	RT, ESF, PAM, PB, Other		Harsh or Mild	E=Electrical M=Mechanical	I, II, Non	
37	MC-D	D-Class 1E 6.9kV Switchgear	R/B	ESF	2wks	Mild	E	I	
38	LC-D	D-Class 1E 480V Load Center	R/B	ESF	2wks	Mild	E	I	
39	MCC-D	D-Class 1E Motor Control Center	R/B	ESF	2wks	Mild	E	I	
40	MCC-D1	D1-Class 1E Motor Control Center	R/B	ESF	2wks	Mild	E	I	
41	RIO-D	D-Safety Remote I/O Cabinet	R/B	ESF, PAM	2wks	Mild	E	I	
42	PBH-D	D-Pressurizer Heater Distribution Panel	R/B	ESF	2wks	Mild	E	I	
43	RPTS-D	D-RCP Trip Switchgear	R/B	Other	2wks	Mild	E	I	
44	RSC	Remote Shutdown Console	R/B	RT, ESF, PAM	2wks	Mild	E	I	
45	MRTP-1	MCR/RSR Transfer Panel (1)	R/B	RT, ESF, PAM	2wks	Mild	E	I	
46	MRTP-2	MCR/RSR Transfer Panel (2)	R/B	RT, ESF, PAM	2wks	Mild	E	I	
47	RTBC-1	Reactor Trip Breaker Cabinet (1)	R/B	RT	5min	Mild	E	I	
48	RTBC-2	Reactor Trip Breaker Cabinet (2)	R/B	RT	5min	Mild	E	I	
49	BCP-A	A-Class 1E Battery Charger	PS/B	RT, ESF	2wks	Mild	E	I	
50A	DCC-A	A-Class 1E DC Switchboard	PS/B	RT, ESF	2wks	Mild	E	I	
50B	DCC-A1	A1-Class 1E DC Switchboard	PS/B	RT, ESF	2wks	Mild	E	I	
51	DDP-A	A-Reactor Building DC Distribution Panel	R/B	RT, ESF	2wks	Mild	E	I	

Table 3D-2 US-APWR Environmental Qualification Equipment List
(Sheet 22 of 57)

Item Num	Equipment Tag	Description	Location	Purpose	Operational Duration	Environmental Conditions	Qualification Process	Seismic Category	Comments
			(PCCV, R/B, A/B, O/B,T/B, UHSRS)	RT, ESF, PAM, PB, Other		Harsh or Mild	E=Electrical M=Mechanical	I, II, Non	
52	SDC-A	A-Solenoid Distribution Panel	R/B	ESF	2wks	Mild	E	I	
53	IBC-A	A-Class 1E UPS Unit	R/B	RT, ESF, PAM	2wks	Mild	E	I	
54	IBB-A	A-Class 1EI&C Power Transformer	R/B	RT, ESF, PAM	2wks	Mild	E	I	
55	IBD-A	A-Class 1E AC120V Panelboard	R/B	RT, ESF, PAM	2wks	Mild	E	I	
56	MVIA1	A-MOV Inverter1	R/B	ESF, PB	2wks	Mild	E	I	
57	MVIA2	A-MOV Inverter2	R/B	ESF, PB	2wks	Mild	E	I	
58	MVCA1	A-MOV Motor Control Center1	R/B	ESF, PB	2wks	Mild	E	I	
59	MVCA2	A-MOV Motor Control Center2	R/B	ESF, PB	2wks	Mild	E	I	
60	BCP-B	B-Class 1E Battery Charger	PS/B	RT, ESF	2wks	Mild	E	I	
61	DCC-B	B-Class 1E DC Switchboard	PS/B	RT, ESF	2wks	Mild	E	I	
62	DDP-B	B-Reactor Building DC Distribution Panel	R/B	RT, ESF	2wks	Mild	E	I	
63	SDC-B	B-Solenoid Distribution Panel	R/B	ESF	2wks	Mild	E	I	
64	IBC-B	B-Class 1E UPS Unit	R/B	RT, ESF, PAM	2wks	Mild	E	I	
65	IBB-B	B-Class 1E I&C Power Transformer	R/B	RT, ESF, PAM	2wks	Mild	E	I	
66	IBD-B	B-Class 1E AC120V Panelboard	R/B	RT, ESF, PAM	2wks	Mild	E	I	
67	MVIB	B-MOV Inverter	R/B	ESF, PB	2wks	Mild	E	I	
68	MVCB	B-MOV Motor Control Center	R/B	ESF, PB	2wks	Mild	E	I	

Table 3D-2 US-APWR Environmental Qualification Equipment List
(Sheet 23 of 57)

Item Num	Equipment Tag	Description	Location	Purpose	Operational Duration	Environmental Conditions	Qualification Process	Seismic Category	Comments
			(PCCV, R/B, A/B, O/B,T/B, UHSRS)	RT, ESF, PAM, PB, Other		Harsh or Mild	E=Electrical M=Mechanical	I, II, Non	
69	BCP-C	C-Class 1E Battery Charger	PS/B	RT, ESF	2wks	Mild	E	I	
70	DCC-C	C-Class 1E DC Switchboard	PS/B	RT, ESF	2wks	Mild	E	I	
71	DDP-C	C-Reactor Building DC Distribution Panel	R/B	RT, ESF	2wks	Mild	E	I	
72	SDC-C	C-Solenoid Distribution Panel	R/B	ESF	2wks	Mild	E	I	
73	IBC-C	C-Class 1E UPS Unit	R/B	RT, ESF, PAM	2wks	Mild	E	I	
74	IBB-C	C-I&C Power Transformer	R/B	RT, ESF, PAM	2wks	Mild	E	I	
75	IBD-C	C-Class 1E AC120V Panelboard	R/B	RT, ESF, PAM	2wks	Mild	E	I	
76	MVIC	C-MOV Inverter	R/B	ESF, PB	2wks	Mild	E	I	
77	MVCC	C-MOV Motor Control Center	R/B	ESF, PB	2wks	Mild	E	I	
78	BCP-D	D-Class 1E Battery Charger	PS/B	RT, ESF	2wks	Mild	E	I	
79A	DCC-D	D-Class 1E DC Switchboard	PS/B	RT, ESF	2wks	Mild	E	I	
79B	DCC-D1	D1-Class 1E DC Switchboard	PS/B	RT, ESF	2wks	Mild	E	I	
80	DDP-D	D-Reactor Building DC Distribution Panel	R/B	RT, ESF	2wks	Mild	E	I	
81	SDC-D	D-Solenoid Distribution Panel	R/B	ESF	2wks	Mild	E	I	
82	IBC-D	D-Class 1E UPS Unit	R/B	RT, ESF, PAM	2wks	Mild	E	I	
83	IBB-D	D-Class 1EI&C Power Transformer	R/B	RT, ESF, PAM	2wks	Mild	E	I	

Table 3D-2 US-APWR Environmental Qualification Equipment List
(Sheet 24 of 57)

Item Num	Equipment Tag	Description	Location	Purpose	Operational Duration	Environmental Conditions	Qualification Process	Seismic Category	Comments
			(PCCV, R/B, A/B, O/B,T/B, UHSRS)	RT, ESF, PAM, PB, Other		Harsh or Mild	E=Electrical M=Mechanical	I, II, Non	
84	IBD-D	D-Class 1E AC120V Panelboard	R/B	RT, ESF, PAM	2wks	Mild	E	I	
85	MVID1	D-MOV Inverter1	R/B	ESF, PB	2wks	Mild	E	I	
86	MVID2	D-MOV Inverter2	R/B	ESF, PB	2wks	Mild	E	I	
87	MVCD1	D-MOV Motor Control Center1	R/B	ESF, PB	2wks	Mild	E	I	
88	MVCD2	D-MOV Motor Control Center2	R/B	ESF, PB	2wks	Mild	E	I	
89	VCC-A	A-Ventilation Chiller Control Cabinet	PS/B	ESF	2wks	Mild	E	I	
90	VCC-B	B-Ventilation Chiller Control Cabinet	PS/B	ESF	2wks	Mild	E	I	
91	VCC-C	C-Ventilation Chiller Control Cabinet	PS/B	ESF	2wks	Mild	E	I	
92	VCC-D	D-Ventilation Chiller Control Cabinet	PS/B	ESF	2wks	Mild	E	I	
93	BAT-A	A-Class 1E Battery	PS/B	RT, ESF	2hr	Mild	E	I	
94	BAT-B	B-Class 1E Battery	PS/B	RT, ESF	2hr	Mild	E	I	
95	BAT-C	C-Class 1E Battery	PS/B	RT, ESF	2hr	Mild	E	I	
96	BAT-D	D-Class 1E Battery	PS/B	RT, ESF	2hr	Mild	E	I	
97	EPBA	A-Class 1E Gas Turbine Generator Control Board	PS/B	ESF	2wks	Mild	E	I	
98	EPBB	B-Class 1E Gas Turbine Generator Control Board	PS/B	ESF	2wks	Mild	E	I	

Table 3D-2 US-APWR Environmental Qualification Equipment List
(Sheet 25 of 57)

Item Num	Equipment Tag	Description	Location	Purpose	Operational Duration	Environmental Conditions	Qualification Process	Seismic Category	Comments
			(PCCV, R/B, A/B, O/B,T/B, UHSRS)	RT, ESF, PAM, PB, Other		Harsh or Mild	E=Electrical M=Mechanical	I, II, Non	
99	EPBC	C-Class 1E Gas Turbine Generator Control Board	PS/B	ESF	2wks	Mild	E	I	
100	EPBD	D-Class 1E Gas Turbine Generator Control Board	PS/B	ESF	2wks	Mild	E	I	
101	TTSD-A	A-Turbine Trip Solenoid Distribution Panel	R/B	Other	2wks	Mild	E	I	
102	TTSD-B	B-Turbine Trip Solenoid Distribution Panel	R/B	Other	2wks	Mild	E	I	
103	TTSD-C	C-Turbine Trip Solenoid Distribution Panel	R/B	Other	2wks	Mild	E	I	
104	TTSD-D	D-Turbine Trip Solenoid Distribution Panel	R/B	Other	2wks	Mild	E	I	
105	SRPP-A	Source Range Neutron Flux Preamplifier Panel (Train A)	R/B	RT, Other	36hr	Mild	E	I	
106	SRPP-D	Source Range Neutron Flux Preamplifier Panel (Train D)	R/B	RT, Other	36hr	Mild	E	I	
107	WRPP-A	Wide Range Neutron Flux Preamplifier Panel (Train A)	R/B	PAM	1yr	Mild	E	I	
108	WRPP-D	Wide Range Neutron Flux Preamplifier Panel (Train D)	R/B	PAM	1yr	Mild	E	I	
Equipment (Rector Coolant System)									
1	RCS-CTK-001	Reactor Vessel	PCCV	PB	1yr	Harsh	M	I	
2	RCS-CHX-001A	A-Steam Generator	PCCV	PB	1yr	Harsh	M	I	
3	RCS-CHX-001B	B-Steam Generator	PCCV	PB	1yr	Harsh	M	I	
4	RCS-CHX-001C	C-Steam Generator	PCCV	PB	1yr	Harsh	M	I	
5	RCS-CHX-001D	D-Steam Generator	PCCV	PB	1yr	Harsh	M	I	
6	RCS-CTK-002	Pressurizer	PCCV	PB	1yr	Harsh	M	I	

Table 3D-2 US-APWR Environmental Qualification Equipment List
(Sheet 26 of 57)

Item Num	Equipment Tag	Description	Location	Purpose	Operational Duration	Environmental Conditions	Qualification Process	Seismic Category	Comments
			(PCCV, R/B, A/B, O/B,T/B, UHSRS)	RT, ESF, PAM, PB, Other		Harsh or Mild	E=Electrical M=Mechanical	I, II, Non	
7	RCS-CPP-001A	A-Reactor Coolant Pump	PCCV	PB	1yr	Harsh	M	I	
8	RCS-CPP-001B	B-Reactor Coolant Pump	PCCV	PB	1yr	Harsh	M	I	
9	RCS-CPP-001C	C-Reactor Coolant Pump	PCCV	PB	1yr	Harsh	M	I	
10	RCS-CPP-001D	D-Reactor Coolant Pump	PCCV	PB	1yr	Harsh	M	I	
11	RCS-VLV-120	A-Pressurizer Safety Valve	PCCV	ESF	5min	Harsh	M	I	
12	RCS-VLV-121	B-Pressurizer Safety Valve	PCCV	ESF	5min	Harsh	M	I	
13	RCS-VLV-122	C-Pressurizer Safety Valve	PCCV	ESF	5min	Harsh	M	I	
14	RCS-VLV-123	D-Pressurizer Safety Valve	PCCV	ESF	5min	Harsh	M	I	
15	RCS-MOV-002A	Motor Operated Valve	PCCV	ESF	1yr	Harsh	M	I	
16	RCS-MOV-002B	Motor Operated Valve	PCCV	ESF	1yr	Harsh	M	I	
17	RCS-MOV-003A	Motor Operated Valve	PCCV	ESF	1yr	Harsh	M	I	
18	RCS-MOV-003B	Motor Operated Valve	PCCV	ESF	1yr	Harsh	M	I	
19	RCS-MOV-111A	Motor Operated Valve	PCCV	ESF	1yr	Harsh	M	I	
20	RCS-MOV-111B	Motor Operated Valve	PCCV	ESF	1yr	Harsh	M	I	
21	RCS-MOV-116A	Motor Operated Valve	PCCV	ESF	1yr	Harsh	M	I	
22	RCS-MOV-116B	Motor Operated Valve	PCCV	ESF	1yr	Harsh	M	I	
23	RCS-MOV-117A	A-Safety Depressurization Valve	PCCV	ESF	1yr	Harsh	M	I	
24	RCS-MOV-117B	B-Safety Depressurization Valve	PCCV	ESF	1yr	Harsh	M	I	
25	RCS-MOV-118	Motor Operated Valve	PCCV	ESF	1yr	Harsh	M	I	
26	RCS-MOV-119	Depressurization Valve	PCCV	ESF	1yr	Harsh	M	I	
27	RCS-AOV-132	Air Operated Valve	R/B	ESF	5min	Mild	M	I	
28	RCS-PCV-451A	A-Pressurizer Spray Valve	PCCV	PB	1yr	Harsh	M	I	
29	RCS-PCV-451B	B-Pressurizer Spray Valve	PCCV	PB	1yr	Harsh	M	I	
30	RCS-AOV-147	Air Operated Valve	PCCV	ESF	5min	Harsh	M	I	

Table 3D-2 US-APWR Environmental Qualification Equipment List
(Sheet 27 of 57)

Item Num	Equipment Tag	Description	Location	Purpose	Operational Duration	Environmental Conditions	Qualification Process	Seismic Category	Comments
			(PCCV, R/B, A/B, O/B,T/B, UHSRS)	RT, ESF, PAM, PB, Other		Harsh or Mild	E=Electrical M=Mechanical	I, II, Non	
31	RCS-AOV-148	Air Operated Valve	R/B	ESF	5min	Mild	M	I	
32	RCS-AOV-138	Air Operated Valve	R/B	ESF	5min	Mild	M	I	
Equipment (Chemical and Volume Control System)									
1	CVS-RPP-001A	A-Charging Pump	R/B	ESF	2wks	Mild	M	I	
2	CVS-RPP-001B	B-Charging Pump	R/B	ESF	2wks	Mild	M	I	
3	CVS-MOV-151	Motor Operated Valve	R/B	ESF	5min	Mild	M	I	
4	CVS-MOV-152	Motor Operated Valve	R/B	ESF	5min	Mild	M	I	
5	CVS-MOV-203	Motor Operated Valve	PCCV	ESF	5min	Harsh	M	I	
6	CVS-MOV-204	Motor Operated Valve	R/B	ESF	5min	Mild	M	I	
7	CVS-MOV-178A	Motor Operated Valve	R/B	ESF	1yr	Mild	M	I	
8	CVS-MOV-178B	Motor Operated Valve	R/B	ESF	1yr	Mild	M	I	
9	CVS-AOV-005	Air Operated Valve	PCCV	ESF	1yr	Harsh	M	I	
10	CVS-AOV-006	Air Operated Valve	R/B	ESF	1yr	Mild	M	I	
11	CVS-AOV-146	Air Operated Valve	R/B	PB	1yr	Mild	M	I	
12	CVS-AOV-155	Air Operated Valve	PCCV	PB	1yr	Harsh	M	I	
13	CVS-AOV-159	Air Operated Valve	PCCV	PB	1yr	Harsh	M	I	
14	CVS-LCV-451	Level Control Valve	PCCV	PB	1yr	Harsh	M	I	
15	CVS-LCV-452	Level Control Valve	PCCV	PB	1yr	Harsh	M	I	
16	CVS-AOV-192A	Air Operated Valve	PCCV	PB	1yr	Harsh	M	I	
17	CVS-AOV-192B	Air Operated Valve	PCCV	PB	1yr	Harsh	M	I	
18	CVS-AOV-221	Air Operated Valve	PCCV	PB	1yr	Harsh	M	I	
19	CVS-AOV-222	Air Operated Valve	PCCV	PB	1yr	Harsh	M	I	
20	CVS-MOV-178C	Motor Operated Valve	R/B	ESF	5min	Mild	M	I	
21	CVS-MOV-178D	Motor Operated Valve	R/B	ESF	5min	Mild	M	I	
22	CVS-AOV-192C	Air Operated Valve	PCCV	PB	1yr	Harsh	M	I	

Table 3D-2 US-APWR Environmental Qualification Equipment List
(Sheet 28 of 57)

Item Num	Equipment Tag	Description	Location	Purpose	Operational Duration	Environmental Conditions	Qualification Process	Seismic Category	Comments
			(PCCV, R/B, A/B, O/B,T/B, UHSRS)	RT, ESF, PAM, PB, Other		Harsh or Mild	E=Electrical M=Mechanical	I, II, Non	
23	CVS-AOV-192D	Air Operated Valve	PCCV	PB	1yr	Harsh	M	I	
24	CVS-LCV-121B	Level Control Valve	R/B	Other	2wks	Mild	M	I	
25	CVS-LCV-121C	Level Control Valve	R/B	Other	2wks	Mild	M	I	
26	CVS-LCV-121D	Level Control Valve	R/B	Other	2wks	Mild	M	I	
27	CVS-LCV-121E	Level Control Valve	R/B	Other	2wks	Mild	M	I	
28	CVS-AOV-165	Air Operated Valve	R/B	Other	2wks	Mild	M	I	
29	CVS-FCV-138	Flow Control Valve	R/B	PB	2wks	Mild	M	I	
30	CVS-FCV-140	Flow Control Valve	R/B	Other	2wks	Mild	M	I	
31	CVS-FCV-218	Flow Control Valve	R/B	Other	2wks	Mild	M	I	
32	CVS-FCV-219	Flow Control Valve	R/B	Other	2wks	Mild	M	I	
33	CVS-VLV-002	Safety Valve	PCCV	ESF	1yr	Harsh	M	I	
34	CVS-VLV-201	Safety Valve	PCCV	ESF	1yr	Harsh	M	I	
35	CVS-AOV-001A	Air Operated Valve	PCCV	PB	1yr	Harsh	M	I	
36	CVS-AOV-001B	Air Operated Valve	PCCV	PB	1yr	Harsh	M	I	
37	CVS-AOV-001C	Air Operated Valve	PCCV	PB	1yr	Harsh	M	I	
38	CVS-HCV-102	Air Operated Valve	PCCV	PB	1yr	Harsh	M	I	
39	CVS-HCV-190	Air Operated Valve	PCCV	PB	1yr	Harsh	M	I	
40	CVS-AOV-224	Air Operated Valve	PCCV	PB	1yr	Harsh	M	I	
41	CVS-LCV-121F	Air Operated Valve	R/B	Other	2 wks	Mild	M	I	
42	CVS-LCV-121G	Air Operated Valve	R/B	Other	2wks	Mild	M	I	
43	CVS-AOV-196A	Air Operated Valve	PCCV	PB	1yr	Harsh	M	I	
44	CVS-AOV-196B	Air Operated Valve	PCCV	PB	1yr	Harsh	M	I	
45	CVS-AOV-196C	Air Operated Valve	PCCV	PB	1yr	Harsh	M	I	
46	CVS-AOV-196D	Air Operated Valve	PCCV	PB	1yr	Harsh	M	I	
Equipment (Safety Injection System)									
1	SIS-RPP-001A	A-Safety Injection Pump	R/B	ESF	1yr	Mild	M	I	

Table 3D-2 US-APWR Environmental Qualification Equipment List
(Sheet 29 of 57)

Item Num	Equipment Tag	Description	Location	Purpose	Operational Duration	Environmental Conditions	Qualification Process	Seismic Category	Comments
			(PCCV, R/B, A/B, O/B,T/B, UHSRS)	RT, ESF, PAM, PB, Other		Harsh or Mild	E=Electrical M=Mechanical	I, II, Non	
2	SIS-RPP-001B	B-Safety Injection Pump	R/B	ESF	1yr	Mild	M	I	
3	SIS-RPP-001C	C-Safety Injection Pump	R/B	ESF	1yr	Mild	M	I	
4	SIS-RPP-001D	D-Safety Injection Pump	R/B	ESF	1yr	Mild	M	I	
5	SIS-CTK-001A	A-Accumulator	PCCV	ESF	1yr	Harsh	M	I	
6	SIS-CTK-001B	B-Accumulator	PCCV	ESF	1yr	Harsh	M	I	
7	SIS-CTK-001C	C-Accumulator	PCCV	ESF	1yr	Harsh	M	I	
8	SIS-CTK-001D	D-Accumulator	PCCV	ESF	1yr	Harsh	M	I	
9	SIS-MOV-001A	Motor Operated Valve	R/B	ESF	1yr	Harsh	M	I	
10	SIS-MOV-001B	Motor Operated Valve	R/B	ESF	1yr	Harsh	M	I	
11	SIS-MOV-009A	Motor Operated Valve	R/B	ESF	1yr	Mild	M	I	
12	SIS-MOV-009B	Motor Operated Valve	R/B	ESF	1yr	Mild	M	I	
13	SIS-MOV-011A	Motor Operated Valve	PCCV	ESF	1yr	Harsh	M	I	
14	SIS-MOV-011B	Motor Operated Valve	PCCV	ESF	1yr	Harsh	M	I	
15	SIS-MOV-014A	Motor Operated Valve	PCCV	ESF	1yr	Harsh	M	I	
16	SIS-MOV-014B	Motor Operated Valve	PCCV	ESF	1yr	Harsh	M	I	
17	SIS-MOV-031B	Motor Operated Valve	PCCV	ESF	1yr	Harsh	M	I	
18	SIS-MOV-032B	Motor Operated Valve	PCCV	ESF	1yr	Harsh	M	I	
19	SIS-MOV-001C	Motor Operated Valve	R/B	ESF	1yr	Harsh	M	I	
20	SIS-MOV-001D	Motor Operated Valve	R/B	ESF	1yr	Harsh	M	I	
21	SIS-MOV-009C	Motor Operated Valve	R/B	ESF	1yr	Mild	M	I	
22	SIS-MOV-009D	Motor Operated Valve	R/B	ESF	1yr	Mild	M	I	
23	SIS-MOV-011C	Motor Operated Valve	PCCV	ESF	1yr	Harsh	M	I	
24	SIS-MOV-011D	Motor Operated Valve	PCCV	ESF	1yr	Harsh	M	I	
25	SIS-MOV-014C	Motor Operated Valve	PCCV	ESF	1yr	Harsh	M	I	
26	SIS-MOV-014D	Motor Operated Valve	PCCV	ESF	1yr	Harsh	M	I	
27	SIS-MOV-024A	Motor Operated Valve	PCCV	ESF	1yr	Harsh	M	I	
28	SIS-MOV-024B	Motor Operated Valve	PCCV	ESF	1yr	Harsh	M	I	

Table 3D-2 US-APWR Environmental Qualification Equipment List
(Sheet 30 of 57)

Item Num	Equipment Tag	Description	Location	Purpose	Operational Duration	Environmental Conditions	Qualification Process	Seismic Category	Comments
			(PCCV, R/B, A/B, O/B,T/B, UHSRS)	RT, ESF, PAM, PB, Other		Harsh or Mild	E=Electrical M=Mechanical	I, II, Non	
29	SIS-MOV-024C	Motor Operated Valve	PCCV	ESF	1yr	Harsh	M	I	
30	SIS-MOV-024D	Motor Operated Valve	PCCV	ESF	1yr	Harsh	M	I	
31	SIS-MOV-031D	Motor Operated Valve	PCCV	ESF	1yr	Harsh	M	I	
32	SIS-MOV-032D	Motor Operated Valve	PCCV	ESF	1yr	Harsh	M	I	
33	SIS-MOV-121A	Motor Operated Valve	PCCV	ESF	1yr	Harsh	M	I	
34	SIS-MOV-121B	Motor Operated Valve	PCCV	ESF	1yr	Harsh	M	I	
35	SIS-MOV-125A	Motor Operated Valve	PCCV	ESF	1yr	Harsh	M	I	
36	SIS-MOV-125B	Motor Operated Valve	PCCV	ESF	1yr	Harsh	M	I	
37	SIS-MOV-125C	Motor Operated Valve	PCCV	ESF	1yr	Harsh	M	I	
38	SIS-MOV-125D	Motor Operated Valve	PCCV	ESF	1yr	Harsh	M	I	
39	SIS-MOV-101A	Motor Operated Valve	PCCV	ESF	1yr	Harsh	M	I	
40	SIS-MOV-101B	Motor Operated Valve	PCCV	ESF	1yr	Harsh	M	I	
41	SIS-MOV-101C	Motor Operated Valve	PCCV	ESF	1yr	Harsh	M	I	
42	SIS-MOV-101D	Motor Operated Valve	PCCV	ESF	1yr	Harsh	M	I	
43	SIS-VLV-116	Safety Valve	PCCV	ESF	1yr	Harsh	M	I	
44	SIS-VLV-126A	Safety Valve	PCCV	ESF	1yr	Harsh	M	I	
45	SIS-VLV-126B	Safety Valve	PCCV	ESF	1yr	Harsh	M	I	
46	SIS-VLV-126C	Safety Valve	PCCV	ESF	1yr	Harsh	M	I	
47	SIS-VLV-126D	Safety Valve	PCCV	ESF	1yr	Harsh	M	I	
48	SIS-HCV-917	Air Operated Valve	PCCV	PB	1yr	Harsh	M	I	
49	SIS-AOV-215A	Air Operated Valve	PCCV	PB	1yr	Harsh	M	I	
50	SIS-AOV-215B	Air Operated Valve	PCCV	PB	1yr	Harsh	M	I	
51	SIS-AOV-215C	Air Operated Valve	PCCV	PB	1yr	Harsh	M	I	
52	SIS-AOV-215D	Air Operated Valve	PCCV	PB	1yr	Harsh	M	I	
53	SIS-AOV-201B	Air Operated Valve	PCCV	PB	1yr	Harsh	M	I	
54	SIS-AOV-201C	Air Operated Valve	PCCV	PB	1yr	Harsh	M	I	
55	SIS-HCV-989	Air Operated Valve	PCCV	PB	1yr	Harsh	M	I	
56	SIS-AOV-114	Air Operated Valve	R/B	ESF	5min	Mild	M	I	

Table 3D-2 US-APWR Environmental Qualification Equipment List
(Sheet 31 of 57)

Item Num	Equipment Tag	Description	Location	Purpose	Operational Duration	Environmental Conditions	Qualification Process	Seismic Category	Comments
			(PCCV, R/B, A/B, O/B,T/B, UHSRS)	RT, ESF, PAM, PB, Other		Harsh or Mild	E=Electrical M=Mechanical	I, II, Non	
Equipment (Residual Heat Removal System)									
1	RHS-RPP-001A	A-Containment Spray/Residual Heat Removal Pump	R/B	ESF	1yr	Mild	M	I	
2	RHS-RPP-001B	B-Containment Spray/Residual Heat Removal Pump	R/B	ESF	1yr	Mild	M	I	
3	RHS-RPP-001C	C-Containment Spray/Residual Heat Removal Pump	R/B	ESF	1yr	Mild	M	I	
4	RHS-RPP-001D	D-Containment Spray/Residual Heat Removal Pump	R/B	ESF	1yr	Mild	M	I	
5	RHS-RHX-001A	A-Containment Spray/Residual Heat Removal Heat Exchanger	R/B	ESF	1yr	Mild	M	I	
6	RHS-RHX-001B	B-Containment Spray/Residual Heat Removal Heat Exchanger	R/B	ESF	1yr	Mild	M	I	
7	RHS-RHX-001C	C-Containment Spray/Residual Heat Removal Heat Exchanger	R/B	ESF	1yr	Mild	M	I	
8	RHS-RHX-001D	D-Containment Spray/Residual Heat Removal Heat Exchanger	R/B	ESF	1yr	Mild	M	I	
9	RHS-MOV-021A	Motor Operated Valve	R/B	ESF	1yr	Mild	M	I	
10	RHS-MOV-021B	Motor Operated Valve	R/B	ESF	1yr	Mild	M	I	
11	RHS-MOV-001A	Motor Operated Valve	PCCV	ESF	1yr	Harsh	M	I	
12	RHS-MOV-001B	Motor Operated Valve	PCCV	ESF	1yr	Harsh	M	I	
13	RHS-MOV-002A	Motor Operated Valve	PCCV	ESF	1yr	Harsh	M	I	
14	RHS-MOV-002B	Motor Operated Valve	PCCV	ESF	1yr	Harsh	M	I	
15	RHS-MOV-025A	Motor Operated Valve	PCCV	ESF	1yr	Harsh	M	I	
16	RHS-MOV-025B	Motor Operated Valve	PCCV	ESF	1yr	Harsh	M	I	
17	RHS-MOV-026A	Motor Operated Valve	PCCV	ESF	1yr	Harsh	M	I	
18	RHS-MOV-026B	Motor Operated Valve	PCCV	ESF	1yr	Harsh	M	I	
19	RHS-HCV-603	Hand Control Valve	R/B	PB	1yr	Mild	M	I	
20	RHS-FCV-601	Flow Control Valve	R/B	PB	1yr	Mild	M	I	
21	RHS-AOV-024A	Air Operated Valve	PCCV	PB	1yr	Harsh	M	I	
22	RHS-MOV-021C	Motor Operated Valve	R/B	ESF	1yr	Mild	M	I	
23	RHS-MOV-021D	Motor Operated Valve	R/B	ESF	1yr	Mild	M	I	
24	RHS-MOV-001C	Motor Operated Valve	PCCV	ESF	1yr	Harsh	M	I	

Table 3D-2 US-APWR Environmental Qualification Equipment List
(Sheet 32 of 57)

Item Num	Equipment Tag	Description	Location	Purpose	Operational Duration	Environmental Conditions	Qualification Process	Seismic Category	Comments
			(PCCV, R/B, A/B, O/B,T/B, UHSRS)	RT, ESF, PAM, PB, Other		Harsh or Mild	E=Electrical M=Mechanical	I, II, Non	
25	RHS-MOV-001D	Motor Operated Valve	PCCV	ESF	1yr	Harsh	M	I	
26	RHS-MOV-002C	Motor Operated Valve	PCCV	ESF	1yr	Harsh	M	I	
27	RHS-MOV-002D	Motor Operated Valve	PCCV	ESF	1yr	Harsh	M	I	
28	RHS-MOV-025C	Motor Operated Valve	PCCV	ESF	1yr	Harsh	M	I	
29	RHS-MOV-025D	Motor Operated Valve	PCCV	ESF	1yr	Harsh	M	I	
30	RHS-MOV-026C	Motor Operated Valve	PCCV	ESF	1yr	Harsh	M	I	
31	RHS-MOV-026D	Motor Operated Valve	PCCV	ESF	1yr	Harsh	M	I	
32	RHS-HCV-633	Hand Control Valve	R/B	PB	1yr	Mild	M	I	
33	RHS-FCV-631	Flow Control Valve	R/B	PB	1yr	Mild	M	I	
34	RHS-AOV-024D	Air Operated Valve	PCCV	PB	1yr	Harsh	M	I	
35	RHS-VLV-003A	Safety Valve	PCCV	ESF	1yr	Harsh	M	I	
36	RHS-VLV-003B	Safety Valve	PCCV	ESF	1yr	Harsh	M	I	
37	RHS-VLV-003C	Safety Valve	PCCV	ESF	1yr	Harsh	M	I	
38	RHS-VLV-003D	Safety Valve	PCCV	ESF	1yr	Harsh	M	I	
39	RHS-VLV-023A	Safety Valve	PCCV	ESF	1yr	Harsh	M	I	
40	RHS-VLV-023B	Safety Valve	PCCV	ESF	1yr	Harsh	M	I	
41	RHS-VLV-023C	Safety Valve	PCCV	ESF	1yr	Harsh	M	I	
42	RHS-VLV-023D	Safety Valve	PCCV	ESF	1yr	Harsh	M	I	
Equipment (Emergency Feedwater System)									
1	EFS-RPP-001A	A-Emergency Feedwater Pump	R/B	ESF	2wks	Mild	M	I	
2	EFS-RPP-001B	B-Emergency Feedwater Pump	R/B	ESF	2wks	Mild	M	I	
3	EFS-RPP-001C	C-Emergency Feedwater Pump	R/B	ESF	2wks	Mild	M	I	
4	EFS-RPP-001D	D-Emergency Feedwater Pump	R/B	ESF	2wks	Mild	M	I	
5	EFS-RPT-001A	A-Emergency Feedwater Pit	R/B	ESF	2wks	Mild	M	I	
6	EFS-RPK-001B	B- Emergency Feedwater Pit	R/B	ESF	2wks	Mild	M	I	
7	EFS-MOV-014A	Motor Operated Valve	R/B	ESF	2wks	Mild	M	I	
8	EFS-MOV-014B	Motor Operated Valve	R/B	ESF	2wks	Mild	M	I	

Table 3D-2 US-APWR Environmental Qualification Equipment List
(Sheet 33 of 57)

Item Num	Equipment Tag	Description	Location	Purpose	Operational Duration	Environmental Conditions	Qualification Process	Seismic Category	Comments
			(PCCV, R/B, A/B, O/B,T/B, UHSRS)	RT, ESF, PAM, PB, Other		Harsh or Mild	E=Electrical M=Mechanical	I, II, Non	
9	EFS-MOV-014C	Motor Operated Valve	R/B	ESF	2wks	Mild	M	I	
10	EFS-MOV-014D	Motor Operated Valve	R/B	ESF	2wks	Mild	M	I	
11	EFS-MOV-017A	A-Emergency Feedwater Control Valve	R/B	ESF	2wks	Harsh	M	I	
12	EFS-MOV-017B	B-Emergency Feedwater Control Valve	R/B	ESF	2wks	Harsh	M	I	
13	EFS-MOV-017C	C-Emergency Feedwater Control Valve	R/B	ESF	2wks	Harsh	M	I	
14	EFS-MOV-017D	D-Emergency Feedwater Control Valve	R/B	ESF	2wks	Harsh	M	I	
15	EFS-MOV-019A	A-Emergency Feedwater Isolation Valve	R/B	ESF	2wks	Mild	M	I	
16	EFS-MOV-019B	B-Emergency Feedwater Isolation Valve	R/B	ESF	2wks	Mild	M	I	
17	EFS-MOV-019C	C-Emergency Feedwater Isolation Valve	R/B	ESF	2wks	Mild	M	I	
18	EFS-MOV-019D	D-Emergency Feedwater Isolation Valve	R/B	ESF	2wks	Mild	M	I	
19	EFS-MOV-101A	A-Emergency Feedwater Pump A-Main Steam Line Steam Isolation Valve	R/B	ESF	2wks	Harsh	M	I	
20	EFS-MOV-101B	A-Emergency Feedwater Pump B-Main Steam Line Steam Isolation Valve	R/B	ESF	2wks	Harsh	M	I	
21	EFS-MOV-101C	D-Emergency Feedwater Pump C-Main Steam Line Steam Isolation Valve	R/B	ESF	2wks	Harsh	M	I	
22	EFS-MOV-101D	D-Emergency Feedwater Pump D-Main Steam Line Steam Isolation Valve	R/B	ESF	2wks	Harsh	M	I	
23	EFS-MOV-103A	A-Emergency Feedwater Pump Actuation Valve	R/B	ESF	2wks	Harsh	M	I	
24	EFS-MOV-103D	B-Emergency Feedwater Pump Actuation Valve	R/B	ESF	2wks	Harsh	M	I	
Equipment (Main Feedwater System)									
1	NFS-VLV-512A	A-Main Feedwater Isolation Valve	R/B	ESF	5min	Harsh	M	I	
2	NFS-VLV-512B	B-Main Feedwater Isolation Valve	R/B	ESF	5min	Harsh	M	I	
3	NFS-VLV-512C	C-Main Feedwater Isolation Valve	R/B	ESF	5min	Harsh	M	I	
4	NFS-VLV-512D	D-Main Feedwater Isolation Valve	R/B	ESF	5min	Harsh	M	I	
5	NFS-MOV-514A	Motor Operated Valve	R/B	PB	2wks	Harsh	M	I	
6	NFS-MOV-514B	Motor Operated Valve	R/B	PB	2wks	Harsh	M	I	
7	NFS-MOV-514C	Motor Operated Valve	R/B	PB	2wks	Harsh	M	I	
8	NFS-MOV-514D	Motor Operated Valve	R/B	PB	2wks	Harsh	M	I	

Table 3D-2 US-APWR Environmental Qualification Equipment List
(Sheet 34 of 57)

Item Num	Equipment Tag	Description	Location	Purpose	Operational Duration	Environmental Conditions	Qualification Process	Seismic Category	Comments
			(PCCV, R/B, A/B, O/B,T/B, UHSRS)	RT, ESF, PAM, PB, Other		Harsh or Mild	E=Electrical M=Mechanical	I, II, Non	
9	NFS-FCV-460	A-Main Feedwater Regulation Valve	R/B	ESF	5min	Harsh	M	Non	
10	NFS-FCV-470	B-Main Feedwater Regulation Valve	R/B	ESF	5min	Harsh	M	Non	
11	NFS-FCV-480	C-Main Feedwater Regulation Valve	R/B	ESF	5min	Harsh	M	Non	
12	NFS-FCV-490	D-Main Feedwater Regulation Valve	R/B	ESF	5min	Harsh	M	I	
13	NFS-FCV-461	A-Main Feedwater Bypass Regulation Valve	R/B	ESF	5min	Harsh	M	I	
14	NFS-FCV-471	B-Main Feedwater Bypass Regulation Valve	R/B	ESF	5min	Harsh	M	I	
15	NFS-FCV-481	C-Main Feedwater Bypass Regulation Valve	R/B	ESF	5min	Harsh	M	I	
16	NFS-FCV-491	D-Main Feedwater Bypass Regulation Valve	R/B	ESF	5min	Harsh	M	I	
17	NFS-LCV-3710	A-Steam Generator Water Filling Control Valve	R/B	ESF	5min	Harsh	M	I	
18	NFS-LCV-3720	B-Steam Generator Water Filling Control Valve	R/B	ESF	5min	Harsh	M	I	
19	NFS-LCV-3730	C-Steam Generator Water Filling Control Valve	R/B	ESF	5min	Harsh	M	I	
20	NFS-LCV-3740	D-Steam Generator Water Filling Control Valve	R/B	ESF	5min	Harsh	M	I	
Equipment (Main Steam System)									
1	NMS-VLV-509A	A1-Main Steam Safety Valve	R/B	ESF	5min	Harsh	M	I	
2	NMS-VLV-510A	A2-Main Steam Safety Valve	R/B	ESF	5min	Harsh	M	I	
3	NMS-VLV-511A	A3-Main Steam Safety Valve	R/B	ESF	5min	Harsh	M	I	
4	NMS-VLV-512A	A4-Main Steam Safety Valve	R/B	ESF	5min	Harsh	M	I	
5	NMS-VLV-513A	A5-Main Steam Safety Valve	R/B	ESF	5min	Harsh	M	I	
6	NMS-VLV-514A	A6-Main Steam Safety Valve	R/B	ESF	5min	Harsh	M	I	
7	NMS-VLV-509B	B1-Main Steam Safety Valve	R/B	ESF	5min	Harsh	M	I	
8	NMS-VLV-510B	B2-Main Steam Safety Valve	R/B	ESF	5min	Harsh	M	I	
9	NMS-VLV-511B	B3-Main Steam Safety Valve	R/B	ESF	5min	Harsh	M	I	
10	NMS-VLV-512B	B4-Main Steam Safety Valve	R/B	ESF	5min	Harsh	M	I	
11	NMS-VLV-513B	B5-Main Steam Safety Valve	R/B	ESF	5min	Harsh	M	I	

Table 3D-2 US-APWR Environmental Qualification Equipment List
(Sheet 35 of 57)

Item Num	Equipment Tag	Description	Location	Purpose	Operational Duration	Environmental Conditions	Qualification Process	Seismic Category	Comments
			(PCCV, R/B, A/B, O/B,T/B, UHSRS)	RT, ESF, PAM, PB, Other		Harsh or Mild	E=Electrical M=Mechanical	I, II, Non	
12	NMS-VLV-514B	B6-Main Steam Safety Valve	R/B	ESF	5min	Harsh	M	I	
13	NMS-VLV-509C	C1-Main Steam Safety Valve	R/B	ESF	5min	Harsh	M	I	
14	NMS-VLV-510C	C2-Main Steam Safety Valve	R/B	ESF	5min	Harsh	M	I	
15	NMS-VLV-511C	C3-Main Steam Safety Valve	R/B	ESF	5min	Harsh	M	I	
16	NMS-VLV-512C	C4-Main Steam Safety Valve	R/B	ESF	5min	Harsh	M	I	
17	NMS-VLV-513C	C5-Main Steam Safety Valve	R/B	ESF	5min	Harsh	M	I	
18	NMS-VLV-514C	C6-Main Steam Safety Valve	R/B	ESF	5min	Harsh	M	I	
19	NMS-VLV-509D	D1-Main Steam Safety Valve	R/B	ESF	5min	Harsh	M	I	
20	NMS-VLV-510D	D2-Main Steam Safety Valve	R/B	ESF	5min	Harsh	M	I	
21	NMS-VLV-511D	D3-Main Steam Safety Valve	R/B	ESF	5min	Harsh	M	I	
22	NMS-VLV-512D	D4-Main Steam Safety Valve	R/B	ESF	5min	Harsh	M	I	
23	NMS-VLV-513D	D5-Main Steam Safety Valve	R/B	ESF	5min	Harsh	M	I	
24	NMS-VLV-514D	D6-Main Steam Safety Valve	R/B	ESF	5min	Harsh	M	I	
25	NMS-MOV-507A	A-Main Steam Relief Valve Block Valve	R/B	ESF	1yr	Harsh	M	I	
26	NMS-MOV-507B	B-Main Steam Relief Valve Block Valve	R/B	ESF	1yr	Harsh	M	I	
27	NMS-MOV-507C	C-Main Steam Relief Valve Block Valve	R/B	ESF	1yr	Harsh	M	I	
28	NMS-MOV-507D	D-Main Steam Relief Valve Block Valve	R/B	ESF	1yr	Harsh	M	I	
29	NMS-MOV-508A	A-Main Steam Depressurization Valve	R/B	ESF	1yr	Harsh	M	I	
30	NMS-MOV-508B	B-Main Steam Depressurization Valve	R/B	ESF	1yr	Harsh	M	I	
31	NMS-MOV-508C	C-Main Steam Depressurization Valve	R/B	ESF	1yr	Harsh	M	I	
32	NMS-MOV-508D	D-Main Steam Depressurization Valve	R/B	ESF	1yr	Harsh	M	I	
33	NMS-AOV-515A	A-Main Steam Isolation Valve	R/B	ESF	1yr	Harsh	M	I	
34	NMS-AOV-515B	B-Main Steam Isolation Valve	R/B	ESF	1yr	Harsh	M	I	
35	NMS-AOV-515C	C-Main Steam Isolation Valve	R/B	ESF	1yr	Harsh	M	I	
36	NMS-AOV-515D	D-Main Steam Isolation Valve	R/B	ESF	1yr	Harsh	M	I	
37	NMS-HCV-3615	A-Main Steam Bypass Isolation Valve	R/B	ESF	5min	Harsh	M	I	

Table 3D-2 US-APWR Environmental Qualification Equipment List
(Sheet 36 of 57)

Item Num	Equipment Tag	Description	Location	Purpose	Operational Duration	Environmental Conditions	Qualification Process	Seismic Category	Comments
			(PCCV, R/B, A/B, O/B,T/B, UHSRS)	RT, ESF, PAM, PB, Other		Harsh or Mild	E=Electrical M=Mechanical	I, II, Non	
38	NMS-HCV-3625	B-Main Steam Bypass Isolation Valve	R/B	ESF	5min	Harsh	M	I	
39	NMS-HCV-3635	C-Main Steam Bypass Isolation Valve Hand Control Valve	R/B	ESF	5min	Harsh	M	I	
40	NMS-HCV-3645	D-Main Steam Bypass Isolation Valve Hand Control Valve	R/B	ESF	5min	Harsh	M	I	
41	NMS-PCV-465	A-Main Steam Relief Valve	R/B	PB	1yr	Harsh	M	I	
42	NMS-PCV-475	B-Main Steam Relief Valve	R/B	PB	1yr	Harsh	M	I	
43	NMS-PCV-485	C-Main Steam Relief Valve	R/B	PB	1yr	Harsh	M	I	
44	NMS-PCV-495	D-Main Steam Relief Valve	R/B	PB	1yr	Harsh	M	I	
45	NMS-TCV-500A	A-Turbine Bypass Valve	T/B	ESF	5min	Mild	M	Non	
46	NMS-TCV-500B	B-Turbine Bypass Valve	T/B	ESF	5min	Mild	M	Non	
47	NMS-TCV-500C	C-Turbine Bypass Valve	T/B	ESF	5min	Mild	M	Non	
48	NMS-TCV-500D	D-Turbine Bypass Valve	T/B	ESF	5min	Mild	M	Non	
49	NMS-TCV-500E	E-Turbine Bypass Valve	T/B	ESF	5min	Mild	M	Non	
50	NMS-TCV-500F	F-Turbine Bypass Valve	T/B	ESF	5min	Mild	M	Non	
51	NMS-TCV-500G	G-Turbine Bypass Valve	T/B	ESF	5min	Mild	M	Non	
52	NMS-TCV-500H	H-Turbine Bypass Valve	T/B	ESF	5min	Mild	M	Non	
53	NMS-TCV-500J	J-Turbine Bypass Valve	T/B	ESF	5min	Mild	M	Non	
54	NMS-TCV-500K	K-Turbine Bypass Valve	T/B	ESF	5min	Mild	M	Non	
55	NMS-TCV-500L	L-Turbine Bypass Valve	T/B	ESF	5min	Mild	M	Non	
56	NMS-TCV-500M	M-Turbine Bypass Valve	T/B	ESF	5min	Mild	M	Non	
57	NMS-TCV-500N	N-Turbine Bypass Valve	T/B	ESF	5min	Mild	M	Non	
58	NMS-TCV-500P	P-Turbine Bypass Valve	T/B	ESF	5min	Mild	M	Non	
59	NMS-TCV-500Q	Q-Turbine Bypass Valve	T/B	ESF	5min	Mild	M	Non	
60	NMS-MOV-701A	A-Main Steam Drain Isolation Valve	R/B	ESF	1yr	Harsh	M	I	
61	NMS-MOV-701B	B-Main Steam Drain Isolation Valve	R/B	ESF	1yr	Harsh	M	I	

Table 3D-2 US-APWR Environmental Qualification Equipment List
(Sheet 37 of 57)

Item Num	Equipment Tag	Description	Location	Purpose	Operational Duration	Environmental Conditions	Qualification Process	Seismic Category	Comments
			(PCCV, R/B, A/B, O/B,T/B, UHSRS)	RT, ESF, PAM, PB, Other		Harsh or Mild	E=Electrical M=Mechanical	I, II, Non	
62	NMS-MOV-701C	C-Main Steam Drain Isolation Valve	R/B	ESF	1yr	Harsh	M	I	
63	NMS-MOV-701D	D-Main Steam Drain Isolation Valve	R/B	ESF	1yr	Harsh	M	I	
Equipment (Containment Spray System)									
64	CSS-COT-001	Spray Nozzle	PCCV	ESF	1yr	Harsh	M	I	
65	CSS-MOV-004A	Motor Operated Valve	R/B	ESF	1yr	Mild	M	I	
66	CSS-MOV-004B	Motor Operated Valve	R/B	ESF	1yr	Mild	M	I	
67	CSS-MOV-001A	Motor Operated Valve	R/B	ESF	1yr	Harsh	M	I	
68	CSS-MOV-001B	Motor Operated Valve	R/B	ESF	1yr	Harsh	M	I	
69	CSS-MOV-004C	Motor Operated Valve	R/B	ESF	1yr	Mild	M	I	
70	CSS-MOV-004D	Motor Operated Valve	R/B	ESF	1yr	Mild	M	I	
71	CSS-MOV-001C	Motor Operated Valve	R/B	ESF	1yr	Harsh	M	I	
72	CSS-MOV-001D	Motor Operated Valve	R/B	ESF	1yr	Harsh	M	I	
73	CSS-MOV-011	Motor Operated Valve	R/B	PB	1yr	Mild	M	I	
Equipment (Component Cooling Water System)									
1	NCS-RPP-001A	A-Component Cooling Water Pump	R/B	ESF	1yr	Mild	M	I	
2	NCS-RPP-001B	B-Component Cooling Water Pump	R/B	ESF	1yr	Mild	M	I	
3	NCS-RPP-001C	C-Component Cooling Water Pump	R/B	ESF	1yr	Mild	M	I	
4	NCS-RPP-001D	D-Component Cooling Water Pump	R/B	ESF	1yr	Mild	M	I	
5	NCS-RTK-001A	A-Component Cooling Water Surge tank	R/B	ESF	1yr	Mild	M	I	
6	NCS-RTK-001B	B-Component Cooling Water Surge Tank	R/B	ESF	1yr	Mild	M	I	
7	NCS-RHX-001A	A-Component Cooling Water Heat Exchanger	R/B	ESF	1yr	Mild	M	I	
8	NCS-RHX-001B	B-Component Cooling Water Heat Exchanger	R/B	ESF	1yr	Mild	M	I	
9	NCS-RHX-001C	C-Component Cooling Water Heat Exchanger	R/B	ESF	1yr	Mild	M	I	

Table 3D-2 US-APWR Environmental Qualification Equipment List
(Sheet 38 of 57)

Item Num	Equipment Tag	Description	Location	Purpose	Operational Duration	Environmental Conditions	Qualification Process	Seismic Category	Comments
			(PCCV, R/B, A/B, O/B,T/B, UHSRS)	RT, ESF, PAM, PB, Other		Harsh or Mild	E=Electrical M=Mechanical	I, II, Non	
10	NCS-RHX-001D	D-Component Cooling Water Heat Exchanger	R/B	ESF	1yr	Mild	M	I	
11	NCS-VLV-003A	Safety Valve	R/B	ESF	1yr	Mild	M	I	
12	NCS-VLV-003B	Safety Valve	R/B	ESF	1yr	Mild	M	I	
13	NCS-MOV-007A	Motor Operated Valve	R/B	ESF	1yr	Mild	M	I	
14	NCS-MOV-007B	Motor Operated Valve	R/B	ESF	1yr	Mild	M	I	
15	NCS-MOV-020A	Motor Operated Valve	R/B	ESF	1yr	Mild	M	I	
16	NCS-MOV-020B	Motor Operated Valve	R/B	ESF	1yr	Mild	M	I	
17	NCS-VLV-035A	Safety Valve	R/B	ESF	1yr	Mild	M	I	
18	NCS-VLV-035B	Safety Valve	R/B	ESF	1yr	Mild	M	I	
19	NCS-RCV-056A	Radiation Control Valve	R/B	PB	1yr	Mild	M	I	
20	NCS-LCV-1200	Level Control Valve	R/B	PB	1yr	Mild	M	I	
21	NCS-MOV-007C	Motor Operated Valve	R/B	ESF	1yr	Mild	M	I	
22	NCS-MOV-007D	Motor Operated Valve	R/B	ESF	1yr	Mild	M	I	
23	NCS-MOV-020C	Motor Operated Valve	R/B	ESF	1yr	Mild	M	I	
24	NCS-MOV-020D	Motor Operated Valve	R/B	ESF	1yr	Mild	M	I	
25	NCS-RCV-056B	Radiation Control Valve	R/B	PB	1yr	Mild	M	I	
26	NCS-LCV-1210	Level Control Valve	R/B	PB	1yr	Mild	M	I	
27	NCS-MOV-145A	Motor Operated Valve	R/B	ESF	1yr	Mild	M	I	
28	NCS-MOV-436B	Motor Operated Valve	PCCV	ESF	1yr	Harsh	M	I	
29	NCS-MOV-438A	Motor Operated Valve	R/B	ESF	1yr	Mild	M	I	
30	NCS-MOV-145B	Motor Operated Valve	R/B	ESF	1yr	Mild	M	I	
31	NCS-MOV-145C	Motor Operated Valve	R/B	ESF	1yr	Mild	M	I	
32	NCS-MOV-145D	Motor Operated Valve	R/B	ESF	1yr	Mild	M	I	
33	NCS-MOV-232A	Motor Operated Valve	R/B	ESF	1yr	Mild	M	I	
34	NCS-MOV-232B	Motor Operated Valve	R/B	ESF	1yr	Mild	M	I	
35	NCS-MOV-233A	Motor Operated Valve	R/B	ESF	1yr	Mild	M	I	

Table 3D-2 US-APWR Environmental Qualification Equipment List
(Sheet 39 of 57)

Item Num	Equipment Tag	Description	Location	Purpose	Operational Duration	Environmental Conditions	Qualification Process	Seismic Category	Comments
			(PCCV, R/B, A/B, O/B,T/B, UHSRS)	RT, ESF, PAM, PB, Other		Harsh or Mild	E=Electrical M=Mechanical	I, II, Non	
36	NCS-MOV-233B	Motor Operated Valve	R/B	ESF	1yr	Mild	M	I	
37	NCS-MOV-234A	Motor Operated Valve	R/B	ESF	1yr	Mild	M	I	
38	NCS-MOV-234B	Motor Operated Valve	R/B	ESF	1yr	Mild	M	I	
39	NCS-MOV-316A	Motor Operated Valve	R/B	PB	1yr	Mild	M	I	
40	NCS-MOV-316B	Motor Operated Valve	R/B	PB	1yr	Mild	M	I	
41	NCS-VLV-406A	Safety Valve	PCCV	ESF	1yr	Harsh	M	I	
42	NCS-VLV-406B	Safety Valve	PCCV	ESF	1yr	Harsh	M	I	
43	NCS-VLV-406C	Safety Valve	PCCV	ESF	1yr	Harsh	M	I	
44	NCS-VLV-406D	Safety Valve	PCCV	ESF	1yr	Harsh	M	I	
45	NCS-VLV-435A	Safety Valve	PCCV	ESF	1yr	Harsh	M	I	
46	NCS-VLV-435B	Safety Valve	PCCV	ESF	1yr	Harsh	M	I	
47	NCS-MOV-436A	Motor Operated Valve	PCCV	ESF	1yr	Harsh	M	I	
48	NCS-FCV-1321A	Flow Control Valve	PCCV	ESF	1yr	Harsh	M	I	
49	NCS-FCV-1321B	Flow Control Valve	PCCV	ESF	1yr	Harsh	M	I	
50	NCS-MOV-511	Motor Operated Valve	R/B	ESF	5min	Mild	M	I	
51	NCS-TCV-103	Temperature Control Valve	PCCV	PB	1yr	Harsh	M	I	
52	NCS-MOV-517	Motor Operated Valve	R/B	ESF	5min	Mild	M	I	
53	NCS-MOV-401A	Motor Operated Valve	R/B	ESF	1yr	Mild	M	I	
54	NCS-MOV-402A	Motor Operated Valve	R/B	ESF	1yr	Mild	M	I	
55	NCS-MOV-531	Motor Operated Valve	R/B	ESF	5min	Mild	M	I	
56	NCS-MOV-537	Motor Operated Valve	R/B	ESF	5min	Mild	M	I	
57	NCS-FCV-1319A	Flow Control Valve	PCCV	ESF	1yr	Harsh	M	I	
58	NCS-FCV-1319B	Flow Control Valve	PCCV	ESF	1yr	Harsh	M	I	
59	NCS-MOV-401B	Motor Operated Valve	R/B	ESF	1yr	Mild	M	I	
60	NCS-MOV-402B	Motor Operated Valve	R/B	ESF	1yr	Mild	M	I	
61	NCS-MOV-446A	Motor Operated Valve	PCCV	ESF	1yr	Harsh	M	I	
62	NCS-MOV-446B	Motor Operated Valve	PCCV	ESF	1yr	Harsh	M	I	

Table 3D-2 US-APWR Environmental Qualification Equipment List
(Sheet 40 of 57)

Item Num	Equipment Tag	Description	Location	Purpose	Operational Duration	Environmental Conditions	Qualification Process	Seismic Category	Comments
			(PCCV, R/B, A/B, O/B,T/B, UHSRS)	RT, ESF, PAM, PB, Other		Harsh or Mild	E=Electrical M=Mechanical	I, II, Non	
63	NCS-MOV-446C	Motor Operated Valve	PCCV	ESF	1yr	Harsh	M	I	
64	NCS-MOV-446D	Motor Operated Valve	PCCV	ESF	1yr	Harsh	M	I	
65	NCS-MOV-445A	Motor Operated Valve	R/B	ESF	1yr	Mild	M	I	
66	NCS-MOV-445B	Motor Operated Valve	R/B	ESF	1yr	Mild	M	I	
67	NCS-MOV-447A	Motor Operated Valve	PCCV	ESF	1yr	Harsh	M	I	
68	NCS-MOV-447B	Motor Operated Valve	PCCV	ESF	1yr	Harsh	M	I	
69	NCS-MOV-448A	Motor Operated Valve	R/B	ESF	1yr	Mild	M	I	
70	NCS-MOV-448B	Motor Operated Valve	R/B	ESF	1yr	Mild	M	I	
71	NCS-FCV-1320A	Flow Control Valve	PCCV	ESF	1yr	Harsh	M	I	
72	NCS-FCV-1320B	Flow Control Valve	PCCV	ESF	1yr	Harsh	M	I	
73	NCS-MOV-438B	Motor Operated Valve	R/B	ESF	5min	Mild	M	I	
74	NCS-FCV-1322A	Flow Control Valve	PCCV	ESF	1yr	Harsh	M	I	
75	NCS-FCV-1322B	Flow Control Valve	PCCV	ESF	1yr	Harsh	M	I	
76	NCS-VLV-513	Safety Valve	PCCV	ESF	1yr	Harsh	M	I	
77	NCS-VLV-533	Safety Valve	PCCV	ESF	1yr	Harsh	M	I	
78	NCS-AOV-601	Air Operated Valve	R/B	ESF	1yr	Mild	M	I	
79	NCS-AOV-602	Air Operated Valve	R/B	ESF	1yr	Mild	M	I	
80	NCS-AOV-661A	Air Operated Valve	R/B	ESF	1yr	Mild	M	I	
81	NCS-AOV-662A	Air Operated Valve	R/B	ESF	1yr	Mild	M	I	
82	NCS-AOV-661B	Air Operated Valve	R/B	ESF	1yr	Mild	M	I	
83	NCS-AOV-662B	Air Operated Valve	R/B	ESF	1yr	Mild	M	I	
84	NCS-PCV-1202	Pressure Control Valve	R/B	PB	1yr	Mild	M	I	
85	NCS-PCV-1212	Pressure Control Valve	R/B	PB	1yr	Mild	M	I	
Equipment (Spent Fuel Pit Cooling and Purification System)									
1	SFP-RPP-001A	A-Spent Fuel Pit Pump	R/B	ESF	2wks	Mild	M	I	
2	SFP-RPP-001B	B-Spent Fuel Pit Pump	R/B	ESF	2wks	Mild	M	I	
3	SFP-RHX-001A	A-Spent Fuel Pit Heat Exchanger	R/B	ESF	2wks	Mild	M	I	

Table 3D-2 US-APWR Environmental Qualification Equipment List
(Sheet 41 of 57)

Item Num	Equipment Tag	Description	Location	Purpose	Operational Duration	Environmental Conditions	Qualification Process	Seismic Category	Comments
			(PCCV, R/B, A/B, O/B,T/B, UHSRS)	RT, ESF, PAM, PB, Other		Harsh or Mild	E=Electrical M=Mechanical	I, II, Non	
4	SFP-RHX-001B	B-Spent Fuel Pit Heat Exchanger	R/B	ESF	2wks	Mild	M	I	
Equipment (Essential Service Water System)									
1	EWS-OPP-001A	A-Essential Service Water Pump	UHSRS	ESF	1yr	Mild	M	I	
2	EWS-OPP-001B	B-Essential Service Water Pump	UHSRS	ESF	1yr	Mild	M	I	
3	EWS-OPP-001C	C-Essential Service Water Pump	UHSRS	ESF	1yr	Mild	M	I	
4	EWS-OPP-001D	D-Essential Service Water Pump	UHSRS	ESF	1yr	Mild	M	I	
5	EWS-OSR-001A	A-Essential Service Water Pump Outlet Strainer	UHSRS	ESF	1yr	Mild	M	I	
6	EWS-OSR-002A	A-Essential Service Water Pump Outlet Strainer	UHSRS	ESF	1yr	Mild	M	I	
7	EWS-OSR-001B	B-Essential Service Water Pump Outlet Strainer	UHSRS	ESF	1yr	Mild	M	I	
8	EWS-OSR-002B	B-Essential Service Water Pump Outlet Strainer	UHSRS	ESF	1yr	Mild	M	I	
9	EWS-OSR-001C	C-Essential Service Water Pump Outlet Strainer	UHSRS	ESF	1yr	Mild	M	I	
10	EWS-OSR-002C	C-Essential Service Water Pump Outlet Strainer	UHSRS	ESF	1yr	Mild	M	I	
11	EWS-OSR-001D	D-Essential Service Water Pump Outlet Strainer	UHSRS	ESF	1yr	Mild	M	I	
12	EWS-OSR-002D	D-Essential Service Water Pump Outlet Strainer	UHSRS	ESF	1yr	Mild	M	I	
13	EWS-RSR-003A	A-Component Cooling Water Heat Exchanger Inlet Strainer	R/B	ESF	1yr	Mild	M	I	
14	EWS-RSR-003B	B-Component Cooling Water Heat Exchanger Inlet Strainer	R/B	ESF	1yr	Mild	M	I	
15	EWS-RSR-003C	C-Component Cooling Water Heat Exchanger Inlet Strainer	R/B	ESF	1yr	Mild	M	I	
16	EWS-RSR-003D	D-Component Cooling Water Heat Exchanger Inlet Strainer	R/B	ESF	1yr	Mild	M	I	
17	EWS-MOV-503A	Motor Operated Valve	UHSRS	ESF	1yr	Mild	M	I	
18	EWS-MOV-503B	Motor Operated Valve	UHSRS	ESF	1yr	Mild	M	I	
19	EWS-MOV-503C	Motor Operated Valve	UHSRS	ESF	1yr	Mild	M	I	
20	EWS-MOV-503D	Motor Operated Valve	UHSRS	ESF	1yr	Mild	M	I	

Table 3D-2 US-APWR Environmental Qualification Equipment List
(Sheet 42 of 57)

Item Num	Equipment Tag	Description	Location	Purpose	Operational Duration	Environmental Conditions	Qualification Process	Seismic Category	Comments
			(PCCV, R/B, A/B, O/B,T/B, UHSRS)	RT, ESF, PAM, PB, Other		Harsh or Mild	E=Electrical M=Mechanical	I, II, Non	
Equipment (Liquid Radioactive Waste Management System)									
21	LMS-RCV-035A	Air Operated Valve	R/B	Other	2wks	Mild	M	Non	
22	LMS-RCV-035B	Air Operated Valve	R/B	Other	2wks	Mild	M	Non	
23	LMS-AOV-052	Air Operated Valve	PCCV	ESF	5min	Harsh	M	I	
24	LMS-AOV-053	Air Operated Valve	R/B	ESF	5min	Mild	M	I	
25	LMS-AOV-055	Air Operated Valve	PCCV	ESF	5min	Harsh	M	I	
26	LMS-AOV-056	Air Operated Valve	R/B	ESF	5min	Mild	M	I	
27	LMS-AOV-060	Air Operated Valve	R/B	ESF	5min	Mild	M	I	
28	LMS-AOV-1000A	Air Operated Valve	PCCV	ESF	5min	Harsh	M	I	
29	LMS-AOV-1000B	Air Operated Valve	R/B	ESF	5min	Mild	M	I	
30	LMS-AOV-104	Air Operated Valve	PCCV	ESF	5min	Harsh	M	I	
31	LMS-AOV-105	Air Operated Valve	R/B	ESF	5min	Mild	M	I	
Equipment (Solid Radioactive Waste Management System)									
1	SMS-ATK-001A	A-Spent Resin Storage Tank	A/B	Other	1yr	Mild	M	Non	
2	SMS-ATK-001B	B-Spent Resin Storage Tank	A/B	Other	1yr	Mild	M	Non	
3	SMS-AOV-023A	Air Operated Valve	A/B	Other	1yr	Mild	M	Non	
4	SMS-AOV-023B	Air Operated Valve	A/B	Other	1yr	Mild	M	Non	
5	SMS-AOV-032A	Air Operated Valve	A/B	Other	1yr	Mild	M	Non	
6	SMS-AOV-032B	Air Operated Valve	A/B	Other	1yr	Mild	M	Non	
Equipment (Process and Post Accident Sampling System)									
1	PSS-AOV-003	Air Operated Valve	PCCV	ESF	1yr	Harsh	M	I	
2	PSS-MOV-006	Motor Operated Valve	PCCV	ESF	1yr	Harsh	M	I	
3	PSS-MOV-013	Motor Operated Valve	PCCV	ESF	1yr	Harsh	M	I	
4	PSS-MOV-023	Motor Operated Valve	PCCV	ESF	1yr	Harsh	M	I	
5	PSS-MOV-031A	Motor Operated Valve	R/B	ESF	1yr	Mild	M	I	
6	PSS-MOV-031B	Motor Operated Valve	R/B	ESF	1yr	Mild	M	I	
7	PSS -MOV-052A	Motor Operated Valve	R/B	Other	1yr	Mild	M	I	

Table 3D-2 US-APWR Environmental Qualification Equipment List
(Sheet 43 of 57)

Item Num	Equipment Tag	Description	Location	Purpose	Operational Duration	Environmental Conditions	Qualification Process	Seismic Category	Comments
			(PCCV, R/B, A/B, O/B,T/B, UHSRS)	RT, ESF, PAM, PB, Other		Harsh or Mild	E=Electrical M=Mechanical	I, II, Non	
8	PSS -MOV-052B	Motor Operated Valve	R/B	Other	1yr	Mild	M	I	
9	PSS-AOV-062A	Air Operated Valve	PCCV	ESF	1yr	Harsh	M	I	
10	PSS-AOV-062B	Air Operated Valve	PCCV	ESF	1yr	Harsh	M	I	
11	PSS-AOV-062C	Air Operated Valve	PCCV	ESF	1yr	Harsh	M	I	
12	PSS-AOV-062D	Air Operated Valve	PCCV	ESF	1yr	Harsh	M	I	
13	PSS-AOV-063	Air Operated Valve	R/B	ESF	1yr	Mild	M	I	
14	PSS-MOV-071	Motor Operated Valve	R/B	ESF	1yr	Mild	M	I	
15	PSS-MOV-301	Motor Operated Valve	R/B	Other	1yr	Mild	M	Non	
16	PSS-MOV-312	Motor Operated Valve	R/B	Other	1yr	Mild	M	Non	
Equipment (Steam Generator Blowdown System)									
1	SGS-AOV-001A	Air Operated Valve	R/B	ESF	5min	Harsh	M	I	
2	SGS-AOV-001B	Air Operated Valve	R/B	ESF	5min	Harsh	M	I	
3	SGS-AOV-001C	Air Operated Valve	R/B	ESF	5min	Harsh	M	I	
4	SGS-AOV-001D	Air Operated Valve	R/B	ESF	5min	Harsh	M	I	
5	SGS-AOV-031A	Air Operated Valve	R/B	ESF	5min	Harsh	M	I	
6	SGS-AOV-031B	Air Operated Valve	R/B	ESF	5min	Harsh	M	I	
7	SGS-AOV-031C	Air Operated Valve	R/B	ESF	5min	Harsh	M	I	
8	SGS-AOV-031D	Air Operated Valve	R/B	ESF	5min	Harsh	M	I	
9	SGV-AOV-002A	Air Operated Valve	R/B	ESF	5min	Harsh	M	I	
10	SGV-AOV-002B	Air Operated Valve	R/B	ESF	5min	Harsh	M	I	
11	SGV-AOV-002C	Air Operated Valve	R/B	ESF	5min	Harsh	M	I	
12	SGV-AOV-002D	Air Operated Valve	R/B	ESF	5min	Harsh	M	I	
Equipment (Refueling Water Storage System)									
1	RWS-CPT-001	Refueling Water Storage Pit	PCCV	ESF	1yr	Harsh	M	I	
2	RWS-MOV-002	Motor Operated Valve	PCCV	ESF	5min	Harsh	M	I	
3	RWS-MOV-004	Motor Operated Valve	R/B	ESF	5min	Mild	M	I	

Table 3D-2 US-APWR Environmental Qualification Equipment List
(Sheet 44 of 57)

Item Num	Equipment Tag	Description	Location	Purpose	Operational Duration	Environmental Conditions	Qualification Process	Seismic Category	Comments
			(PCCV, R/B, A/B, O/B,T/B, UHSRS)	RT, ESF, PAM, PB, Other		Harsh or Mild	E=Electrical M=Mechanical	I, II, Non	
4	RWS-AOV-022	Air Operated Valve	R/B	ESF	5min	Mild	M	I	
5	RWS-RRP-001A	A-Refueling Water Recirculation Pump	R/B	ESF	1yr	Mild	M	I	
6	RWS-RRP-001B	B-Refueling Water Recirculation Pump	R/B	ESF	1yr	Mild	M	I	
Equipment (Compressed Air Supply System)									
1	CAS-MOV-002	Motor Operated Valve	R/B	ESF	5min	Mild	M	I	
Equipment (Plant Radiation Monitoring System)									
1	RMS-MOV-001	Motor Operated Valve	PCCV	ESF	1yr	Harsh	M	I	
2	RMS-MOV-002	Motor Operated Valve	R/B	ESF	1yr	Mild	M	I	
3	RMS-MOV-003	Motor Operated Valve	R/B	ESF	1yr	Mild	M	I	
Equipment (Main Control Room HVAC System)									
1	VRS-RAH-101A	A-Main Control Room Air Handling Unit	R/B	ESF	1yr	Mild	M	I	
2	VRS-RAH-101B	B-Main Control Room Air Handling Unit	R/B	ESF	1yr	Mild	M	I	
3	VRS-RAH-101C	C-Main Control Room Air Handling Unit	R/B	ESF	1yr	Mild	M	I	
4	VRS-RAH-101D	D-Main Control Room Air Handling Unit	R/B	ESF	1yr	Mild	M	I	
5	VRS-RFN-101A	A-Main Control Room Air Handling Unit Fan	R/B	ESF	1yr	Mild	M	I	
6	VRS-RFN-101B	B-Main Control Room Air Handling Unit Fan	R/B	ESF	1yr	Mild	M	I	
7	VRS-RFN-101C	C-Main Control Room Air Handling Unit Fan	R/B	ESF	1yr	Mild	M	I	
8	VRS-RFN-101D	D-Main Control Room Air Handling Unit Fan	R/B	ESF	1yr	Mild	M	I	
9	VRS-RCC-101A	A-Main Control Room Air Handling Unit Cooling Coil	R/B	ESF	1yr	Mild	M	I	
10	VRS-RCC-101B	B-Main Control Room Air Handling Unit Cooling Coil	R/B	ESF	1yr	Mild	M	I	
11	VRS-RCC-101C	C-Main Control Room Air Handling Unit Cooling Coil	R/B	ESF	1yr	Mild	M	I	
12	VRS-RCC-101D	D-Main Control Room Air Handling Unit Cooling Coil	R/B	ESF	1yr	Mild	M	I	
13	VRS-REH-101A	A-Main Control Room Air Handling Unit Electric Heating Coil	R/B	ESF	1yr	Mild	M	I	
14	VRS-REH-101B	B-Main Control Room Air Handling Unit Electric Heating Coil	R/B	ESF	1yr	Mild	M	I	
15	VRS-REH-101C	C-Main Control Room Air Handling Unit Electric Heating Coil	R/B	ESF	1yr	Mild	M	I	
16	VRS-REH-101D	D-Main Control Room Air Handling Unit Electric Heating Coil	R/B	ESF	1yr	Mild	M	I	

Table 3D-2 US-APWR Environmental Qualification Equipment List
(Sheet 45 of 57)

Item Num	Equipment Tag	Description	Location	Purpose	Operational Duration	Environmental Conditions	Qualification Process	Seismic Category	Comments
			(PCCV, R/B, A/B, O/B,T/B, UHSRS)	RT, ESF, PAM, PB, Other		Harsh or Mild	E=Electrical M=Mechanical	I, II, Non	
17	VRS-RFU-111A	A-Main Control Room Emergency Filtration Unit	R/B	ESF	1yr	Mild	M	I	
18	VRS-RFU-111B	B-Main Control Room Emergency Filtration Unit	R/B	ESF	1yr	Mild	M	I	
19	VRS-RFN-111A	A-Main Control Room Emergency Filtration Unit Fan	R/B	ESF	1yr	Mild	M	I	
20	VRS-RFN-111B	B-Main Control Room Emergency Filtration Unit Fan	R/B	ESF	1yr	Mild	M	I	
21	VRS-REH-111A	A-Main Control Room Emergency Filtration Unit Electric Heating Coil	R/B	ESF	1yr	Mild	M	I	
22	VRS-REH-111B	B-Main Control Room Emergency Filtration Unit Electric Heating Coil	R/B	ESF	1yr	Mild	M	I	
23	VRS-MOD-101A	Motor Operated Damper	R/B	ESF	1yr	Mild	M	I	
24	VRS-MOD-101B	Motor Operated Damper	R/B	ESF	1yr	Mild	M	I	
25	VRS-MOD-102A	Motor Operated Damper	R/B	ESF	1yr	Mild	M	I	
26	VRS-MOD-102B	Motor Operated Damper	R/B	ESF	1yr	Mild	M	I	
27	VRS-AOD-103A	Air Operated Damper	R/B	ESF	5min	Mild	M	I	
28	VRS-AOD-103B	Air Operated Damper	R/B	ESF	5min	Mild	M	I	
29	VRS-MOD-104A	Motor Operated Damper	R/B	ESF	1yr	Mild	M	I	
30	VRS-MOD-104B	Motor Operated Damper	R/B	ESF	1yr	Mild	M	I	
31	VRS-MOD-105A	Motor Operated Damper	R/B	ESF	1yr	Mild	M	I	
32	VRS-MOD-105B	Motor Operated Damper	R/B	ESF	1yr	Mild	M	I	
33	VRS-MOD-105C	Motor Operated Damper	R/B	ESF	1yr	Mild	M	I	
34	VRS-MOD-105D	Motor Operated Damper	R/B	ESF	1yr	Mild	M	I	
35	VRS-MOD-106A	Motor Operated Damper	R/B	ESF	1yr	Mild	M	I	
36	VRS-MOD-106B	Motor Operated Damper	R/B	ESF	1yr	Mild	M	I	
37	VRS-MOD-106C	Motor Operated Damper	R/B	ESF	1yr	Mild	M	I	
38	VRS-MOD-106D	Motor Operated Damper	R/B	ESF	1yr	Mild	M	I	
39	VRS-MOD-107A	Motor Operated Damper	R/B	ESF	1yr	Mild	M	I	
40	VRS-MOD-107B	Motor Operated Damper	R/B	ESF	1yr	Mild	M	I	
41	VRS-MOD-111A	Motor Operated Damper	R/B	ESF	1yr	Mild	M	I	
42	VRS-MOD-111B	Motor Operated Damper	R/B	ESF	1yr	Mild	M	I	
43	VRS-MOD-112A	Motor Operated Damper	R/B	ESF	1yr	Mild	M	I	
44	VRS-MOD-112B	Motor Operated Damper	R/B	ESF	1yr	Mild	M	I	
45	VRS-MOD-113A	Motor Operated Damper	R/B	ESF	1yr	Mild	M	I	
46	VRS-MOD-113B	Motor Operated Damper	R/B	ESF	1yr	Mild	M	I	
47	VRS-AOD-121	Air Operated Damper	R/B	ESF	5min	Mild	M	I	

Table 3D-2 US-APWR Environmental Qualification Equipment List
(Sheet 46 of 57)

Item Num	Equipment Tag	Description	Location	Purpose	Operational Duration	Environmental Conditions	Qualification Process	Seismic Category	Comments
			(PCCV, R/B, A/B, O/B,T/B, UHSRS)	RT, ESF, PAM, PB, Other		Harsh or Mild	E=Electrical M=Mechanical	I, II, Non	
48	VRS-AOD-122	Air Operated Damper	R/B	ESF	5min	Mild	M	I	
49	VRS-AOD-131	Air Operated Damper	R/B	ESF	5min	Mild	M	I	
50	VRS-AOD-132	Air Operated Damper	R/B	ESF	5min	Mild	M	I	
Equipment (Engineered Safety Features Ventilation System)									
1	VRS-RFU-001A	A-Annulus Emergency Exhaust Filtration Unit	R/B	ESF	1yr	Mild	M	I	
2	VRS-RFU-001B	B-Annulus Emergency Exhaust Filtration Unit	R/B	ESF	1yr	Mild	M	I	
3	VRS-RFN-001A	A-Annulus Emergency Exhaust Filtration Unit Fan	R/B	ESF	1yr	Mild	M	I	
4	VRS-RFN-001B	B-Annulus Emergency Exhaust Filtration Unit Fan	R/B	ESF	1yr	Mild	M	I	
5	VRS-MOD-001A	Motor Operated Damper	R/B	ESF	1yr	Mild	M	I	
6	VRS-MOD-001B	Motor Operated Damper	R/B	ESF	1yr	Mild	M	I	
7	VRS-MOD-002A	Motor Operated Damper	R/B	ESF	1yr	Mild	M	I	
8	VRS-MOD-002B	Motor Operated Damper	R/B	ESF	1yr	Mild	M	I	
9	VRS-MOD-003A	Motor Operated Damper	R/B	ESF	1yr	Mild	M	I	
10	VRS-MOD-003B	Motor Operated Damper	R/B	ESF	1yr	Mild	M	I	
11	VRS-RAH-201A	A-Class 1E Electrical Room Air Handling Unit	R/B	ESF	1yr	Mild	M	I	
12	VRS-RAH-201B	B-Class 1E Electrical Room Air Handling Unit	R/B	ESF	1yr	Mild	M	I	
13	VRS-RAH-201C	C-Class 1E Electrical Room Air Handling Unit	R/B	ESF	1yr	Mild	M	I	
14	VRS-RAH-201D	D-Class 1E Electrical Room Air Handling Unit	R/B	ESF	1yr	Mild	M	I	
15	VRS-RFN-201A	A-Class 1E Electrical Room Air Handling Unit Fan	R/B	ESF	1yr	Mild	M	I	
16	VRS-RFN-201B	B-Class 1E Electrical Room Air Handling Unit Fan	R/B	ESF	1yr	Mild	M	I	
17	VRS-RFN-201C	C-Class 1E Electrical Room Air Handling Unit Fan	R/B	ESF	1yr	Mild	M	I	
18	VRS-RFN-201D	D-Class 1E Electrical Room Air Handling Unit Fan	R/B	ESF	1yr	Mild	M	I	
19	VRS-RFN-202A	A-Class 1E Electrical Room Return Air Fan	R/B	ESF	1yr	Mild	M	I	
20	VRS-RFN-202B	B-Class 1E Electrical Room Return Air Fan	R/B	ESF	1yr	Mild	M	I	

Table 3D-2 US-APWR Environmental Qualification Equipment List
(Sheet 47 of 57)

Item Num	Equipment Tag	Description	Location	Purpose	Operational Duration	Environmental Conditions	Qualification Process	Seismic Category	Comments
			(PCCV, R/B, A/B, O/B,T/B, UHSRS)	RT, ESF, PAM, PB, Other		Harsh or Mild	E=Electrical M=Mechanical	I, II, Non	
21	VRS-RFN-202C	C-Class 1E Electrical Room Return Air Fan	R/B	ESF	1yr	Mild	M	I	
22	VRS-RFN-202D	D-Class 1E Electrical Room Return Air Fan	R/B	ESF	1yr	Mild	M	I	
23	VRS-RCC-201A	A-Class 1E Electrical Room Air Handling Unit Cooling Coil	R/B	ESF	1yr	Mild	M	I	
24	VRS-RCC-201B	B-Class 1E Electrical Room Air Handling Unit Cooling Coil	R/B	ESF	1yr	Mild	M	I	
25	VRS-RCC-201C	C-Class 1E Electrical Room Air Handling Unit Cooling Coil	R/B	ESF	1yr	Mild	M	I	
26	VRS-RCC-201D	D-Class 1E Electrical Room Air Handling Unit Cooling Coil	R/B	ESF	1yr	Mild	M	I	
27	VRS-REH-201A	A-Class 1E Electrical Room Air Handling Unit Electric Heating Coil	R/B	ESF	1yr	Mild	M	I	
28	VRS-REH-201B	B-Class 1E Electrical Room Air Handling Unit Electric Heating Coil	R/B	ESF	1yr	Mild	M	I	
29	VRS-REH-201C	C-Class 1E Electrical Room Air Handling Unit Electric Heating Coil	R/B	ESF	1yr	Mild	M	I	
30	VRS-REH-201D	D-Class 1E Electrical Room Air Handling Unit Electric Heating Coil	R/B	ESF	1yr	Mild	M	I	
31	VRS-MOD-201A	Motor Operated Damper	R/B	ESF	1yr	Mild	M	I	
32	VRS-MOD-201B	Motor Operated Damper	R/B	ESF	1yr	Mild	M	I	
33	VRS-MOD-201C	Motor Operated Damper	R/B	ESF	1yr	Mild	M	I	
34	VRS-MOD-201D	Motor Operated Damper	R/B	ESF	1yr	Mild	M	I	
35	VRS-MOD-202A	Motor Operated Damper	R/B	ESF	1yr	Mild	M	I	
36	VRS-MOD-202B	Motor Operated Damper	R/B	ESF	1yr	Mild	M	I	
37	VRS-MOD-202C	Motor Operated Damper	R/B	ESF	1yr	Mild	M	I	
38	VRS-MOD-202D	Motor Operated Damper	R/B	ESF	1yr	Mild	M	I	
39	VRS-MOD-203A	Motor Operated Damper	R/B	ESF	1yr	Mild	M	I	
40	VRS-MOD-203B	Motor Operated Damper	R/B	ESF	1yr	Mild	M	I	
41	VRS-MOD-203C	Motor Operated Damper	R/B	ESF	1yr	Mild	M	I	
42	VRS-MOD-203D	Motor Operated Damper	R/B	ESF	1yr	Mild	M	I	
43	VRS-MOD-204A	Motor Operated Damper	R/B	ESF	1yr	Mild	M	I	
44	VRS-MOD-204B	Motor Operated Damper	R/B	ESF	1yr	Mild	M	I	
45	VRS-MOD-204C	Motor Operated Damper	R/B	ESF	1yr	Mild	M	I	
46	VRS-MOD-204D	Motor Operated Damper	R/B	ESF	1yr	Mild	M	I	

Table 3D-2 US-APWR Environmental Qualification Equipment List
(Sheet 48 of 57)

Item Num	Equipment Tag	Description	Location	Purpose	Operational Duration	Environmental Conditions	Qualification Process	Seismic Category	Comments
			(PCCV, R/B, A/B, O/B,T/B, UHSRS)	RT, ESF, PAM, PB, Other		Harsh or Mild	E=Electrical M=Mechanical	I, II, Non	
47	VRS-AOD-205A	Air Operated Damper	R/B	ESF	5min	Mild	M	I	
48	VRS-AOD-205B	Air Operated Damper	R/B	ESF	5min	Mild	M	I	
49	VRS-AOD-205C	Air Operated Damper	R/B	ESF	5min	Mild	M	I	
50	VRS-AOD-205D	Air Operated Damper	R/B	ESF	5min	Mild	M	I	
51	VRS-RFN-251A	A-Class 1E Battery Room Exhaust Fan	R/B	ESF	1yr	Mild	M	I	
52	VRS-RFN-251B	B-Class 1E Battery Room Exhaust Fan	R/B	ESF	1yr	Mild	M	I	
53	VRS-RFN-251C	C-Class 1E Battery Room Exhaust Fan	R/B	ESF	1yr	Mild	M	I	
54	VRS-RFN-251D	D-Class 1E Battery Room Exhaust Fan	R/B	ESF	1yr	Mild	M	I	
55	VRS-MOD-251A	Motor Operated Damper	R/B	ESF	1yr	Mild	M	I	
56	VRS-MOD-251B	Motor Operated Damper	R/B	ESF	1yr	Mild	M	I	
57	VRS-MOD-251C	Motor Operated Damper	R/B	ESF	1yr	Mild	M	I	
58	VRS-MOD-251D	Motor Operated Damper	R/B	ESF	1yr	Mild	M	I	
59	VRS-MOD-252A	Motor Operated Damper	R/B	ESF	1yr	Mild	M	I	
60	VRS-MOD-252B	Motor Operated Damper	R/B	ESF	1yr	Mild	M	I	
61	VRS-MOD-252C	Motor Operated Damper	R/B	ESF	1yr	Mild	M	I	
62	VRS-MOD-252D	Motor Operated Damper	R/B	ESF	1yr	Mild	M	I	
63	VRS-RAH-301A	A-Safeguard Component Area Air Handling Unit	R/B	ESF	1yr	Mild	M	I	
64	VRS-RAH-301B	B-Safeguard Component Area Air Handling Unit	R/B	ESF	1yr	Mild	M	I	
65	VRS-RAH-301C	C-Safeguard Component Area Air Handling Unit	R/B	ESF	1yr	Mild	M	I	
66	VRS-RAH-301D	D-Safeguard Component Area Air Handling Unit	R/B	ESF	1yr	Mild	M	I	
67	VRS-RFN-301A	A-Safeguard Component Area Air Handling Unit Fan	R/B	ESF	1yr	Mild	M	I	
68	VRS-RFN-301B	B-Safeguard Component Area Air Handling Unit Fan	R/B	ESF	1yr	Mild	M	I	
69	VRS-RFN-301C	C-Safeguard Component Area Air Handling Unit Fan	R/B	ESF	1yr	Mild	M	I	
70	VRS-RFN-301D	D-Safeguard Component Area Air Handling Unit Fan	R/B	ESF	1yr	Mild	M	I	
71	VRS-RCC-301A	A-Safeguard Component Area Air Handling Unit Cooling Coil	R/B	ESF	1yr	Mild	M	I	
72	VRS-RCC-301B	B-Safeguard Component Area Air Handling Unit Cooling Coil	R/B	ESF	1yr	Mild	M	I	
73	VRS-RCC-301C	C-Safeguard Component Area Air Handling Unit Cooling Coil	R/B	ESF	1yr	Mild	M	I	
74	VRS-RCC-301D	D-Safeguard Component Area Air Handling Unit Cooling Coil	R/B	ESF	1yr	Mild	M	I	

Table 3D-2 US-APWR Environmental Qualification Equipment List
(Sheet 49 of 57)

Item Num	Equipment Tag	Description	Location	Purpose	Operational Duration	Environmental Conditions	Qualification Process	Seismic Category	Comments
			(PCCV, R/B, A/B, O/B,T/B, UHSRS)	RT, ESF, PAM, PB, Other		Harsh or Mild	E=Electrical M=Mechanical	I, II, Non	
75	VRS-REH-301A	A-Safeguard Component Area Air Handling Unit Electric Heating Coil	R/B	ESF	1yr	Mild	M	I	
76	VRS-REH-301B	B-Safeguard Component Area Air Handling Unit Electric Heating Coil	R/B	ESF	1yr	Mild	M	I	
77	VRS-REH-301C	C-Safeguard Component Area Air Handling Unit Electric Heating Coil	R/B	ESF	1yr	Mild	M	I	
78	VRS-REH-301D	D-Safeguard Component Area Air Handling Unit Electric Heating Coil	R/B	ESF	1yr	Mild	M	I	
79	VRS-MOD-301A	Motor Operated Damper	R/B	ESF	1yr	Mild	M	I	
80	VRS-MOD-301B	Motor Operated Damper	R/B	ESF	1yr	Mild	M	I	
81	VRS-MOD-301C	Motor Operated Damper	R/B	ESF	1yr	Mild	M	I	
82	VRS-MOD-301D	Motor Operated Damper	R/B	ESF	1yr	Mild	M	I	
83	VRS-MOD-302A	Motor Operated Damper	R/B	ESF	1yr	Mild	M	I	
84	VRS-MOD-302B	Motor Operated Damper	R/B	ESF	1yr	Mild	M	I	
85	VRS-MOD-302C	Motor Operated Damper	R/B	ESF	1yr	Mild	M	I	
86	VRS-MOD-302D	Motor Operated Damper	R/B	ESF	1yr	Mild	M	I	
87	VRS-RAH-401A	A-Emergency Feedwater Pump Area Air Handling Unit	R/B	ESF	1yr	Mild	M	I	
88	VRS-RAH-401B	B-Emergency Feedwater Pump Area Air Handling Unit	R/B	ESF	1yr	Mild	M	I	
89	VRS-RAH-401C	C-Emergency Feedwater Pump Area Air Handling Unit	R/B	ESF	1yr	Mild	M	I	
90	VRS-RAH-401D	D-Emergency Feedwater Pump Area Air Handling Unit	R/B	ESF	1yr	Mild	M	I	
91	VRS-RFN-401A	A-Emergency Feedwater Pump Area Air Handling Unit Fan	R/B	ESF	1yr	Mild	M	I	
92	VRS-RFN-401B	B-Emergency Feedwater Pump Area Air Handling Unit Fan	R/B	ESF	1yr	Mild	M	I	
93	VRS-RFN-401C	C-Emergency Feedwater Pump Area Air Handling Unit Fan	R/B	ESF	1yr	Mild	M	I	
94	VRS-RFN-401D	D-Emergency Feedwater Pump Area Air Handling Unit Fan	R/B	ESF	1yr	Mild	M	I	
95	VRS-RCC-401A	A-Emergency Feedwater Pump Area Air Handling Unit Cooling Coil	R/B	ESF	1yr	Mild	M	I	
96	VRS-RCC-401B	B-Emergency Feedwater Pump Area Air Handling Unit Cooling Coil	R/B	ESF	1yr	Mild	M	I	
97	VRS-RCC-401C	C-Emergency Feedwater Pump Area Air Handling Unit Cooling Coil	R/B	ESF	1yr	Mild	M	I	

Table 3D-2 US-APWR Environmental Qualification Equipment List
(Sheet 50 of 57)

Item Num	Equipment Tag	Description	Location	Purpose	Operational Duration	Environmental Conditions	Qualification Process	Seismic Category	Comments
			(PCCV, R/B, A/B, O/B,T/B, UHSRS)	RT, ESF, PAM, PB, Other		Harsh or Mild	E=Electrical M=Mechanical	I, II, Non	
98	VRS-RCC-401D	D-Emergency Feedwater Pump Area Air Handling Unit Cooling Coil	R/B	ESF	1yr	Mild	M	I	
99	VRS-REH-401A	A-Emergency Feedwater Pump Area Air Handling Unit Electric Heating Coil	R/B	ESF	1yr	Mild	M	I	
100	VRS-REH-401B	B-Emergency Feedwater Pump Area Air Handling Unit Electric Heating Coil	R/B	ESF	1yr	Mild	M	I	
101	VRS-REH-401C	C-Emergency Feedwater Pump Area Air Handling Unit Electric Heating Coil	R/B	ESF	1yr	Mild	M	I	
102	VRS-REH-401D	D-Emergency Feedwater Pump Area Air Handling Unit Electric Heating Coil	R/B	ESF	1yr	Mild	M	I	
103	VRS-RAH-501A	A-Component Cooling Water Pump Area Air Handling Unit	R/B	ESF	1yr	Mild	M	I	
104	VRS-RAH-501B	B-Component Cooling Water Pump Area Air Handling Unit	R/B	ESF	1yr	Mild	M	I	
105	VRS-RAH-501C	C-Component Cooling Water Pump Area Air Handling Unit	R/B	ESF	1yr	Mild	M	I	
106	VRS-RAH-501D	D-Component Cooling Water Pump Area Air Handling Unit	R/B	ESF	1yr	Mild	M	I	
107	VRS-RFN-501A	A-Component Cooling Water Pump Area Air Handling Unit Fan	R/B	ESF	1yr	Mild	M	I	
108	VRS-RFN-501B	B-Component Cooling Water Pump Area Air Handling Unit Fan	R/B	ESF	1yr	Mild	M	I	
109	VRS-RFN-501C	C-Component Cooling Water Pump Area Air Handling Unit Fan	R/B	ESF	1yr	Mild	M	I	
110	VRS-RFN-501D	D-Component Cooling Water Pump Area Air Handling Unit Fan	R/B	ESF	1yr	Mild	M	I	
111	VRS-RCC-501A	A-Component Cooling Water Pump Area Air Handling Unit Cooling Coil	R/B	ESF	1yr	Mild	M	I	
112	VRS-RCC-501B	B-Component Cooling Water Pump Area Air Handling Unit Cooling Coil	R/B	ESF	1yr	Mild	M	I	
113	VRS-RCC-501C	C-Component Cooling Water Pump Area Air Handling Unit Cooling Coil	R/B	ESF	1yr	Mild	M	I	

Table 3D-2 US-APWR Environmental Qualification Equipment List
(Sheet 51 of 57)

Item Num	Equipment Tag	Description	Location	Purpose	Operational Duration	Environmental Conditions	Qualification Process	Seismic Category	Comments
			(PCCV, R/B, A/B, O/B,T/B, UHSRS)	RT, ESF, PAM, PB, Other		Harsh or Mild	E=Electrical M=Mechanical	I, II, Non	
114	VRS-RCC-501D	D-Component Cooling Water Pump Area Air Handling Unit Cooling Coil	R/B	ESF	1yr	Mild	M	I	
115	VRS-REH-501A	A-Component Cooling Water Pump Area Air Handling Unit Electric Heating Coil	R/B	ESF	1yr	Mild	M	I	
116	VRS-REH-501B	B-Component Cooling Water Pump Area Air Handling Unit Electric Heating Coil	R/B	ESF	1yr	Mild	M	I	
117	VRS-REH-501C	C-Component Cooling Water Pump Area Air Handling Unit Electric Heating Coil	R/B	ESF	1yr	Mild	M	I	
118	VRS-REH-501D	D-Component Cooling Water Pump Area Air Handling Unit Electric Heating Coil	R/B	ESF	1yr	Mild	M	I	
119	VRS-PAH-511A	A-Essential Chiller Unit Area Air Handling Unit	PS/B	ESF	1yr	Mild	M	I	
120	VRS-PAH-511B	B-Essential Chiller Unit Area Air Handling Unit	PS/B	ESF	1yr	Mild	M	I	
121	VRS-PAH-511C	C-Essential Chiller Unit Area Air Handling Unit	PS/B	ESF	1yr	Mild	M	I	
122	VRS-PAH-511D	D-Essential Chiller Unit Area Air Handling Unit	PS/B	ESF	1yr	Mild	M	I	
123	VRS-PFN-511A	A-Essential Chiller Unit Area Air Handling Unit Fan	PS/B	ESF	1yr	Mild	M	I	
124	VRS-PFN-511B	B-Essential Chiller Unit Area Air Handling Unit Fan	PS/B	ESF	1yr	Mild	M	I	
125	VRS-PFN-511C	C-Essential Chiller Unit Area Air Handling Unit Fan	PS/B	ESF	1yr	Mild	M	I	
126	VRS-PFN-511D	D-Essential Chiller Unit Area Air Handling Unit Fan	PS/B	ESF	1yr	Mild	M	I	
127	VRS-PCC-511A	A-Essential Chiller Unit Area Air Handling Unit Cooling Coil	PS/B	ESF	1yr	Mild	M	I	
128	VRS-PCC-511B	B-Essential Chiller Unit Area Air Handling Unit Cooling Coil	PS/B	ESF	1yr	Mild	M	I	
129	VRS-PCC-511C	C-Essential Chiller Unit Area Air Handling Unit Cooling Coil	PS/B	ESF	1yr	Mild	M	I	

Table 3D-2 US-APWR Environmental Qualification Equipment List
(Sheet 52 of 57)

Item Num	Equipment Tag	Description	Location	Purpose	Operational Duration	Environmental Conditions	Qualification Process	Seismic Category	Comments
			(PCCV, R/B, A/B, O/B,T/B, UHSRS)	RT, ESF, PAM, PB, Other		Harsh or Mild	E=Electrical M=Mechanical	I, II, Non	
130	VRS-PCC-511D	D-Essential Chiller Unit Area Air Handling Unit Cooling Coil	PS/B	ESF	1yr	Mild	M	I	
131	VRS-PEH-511A	A-Essential Chiller Unit Area Air Handling Unit Electric Heating Coil	PS/B	ESF	1yr	Mild	M	I	
132	VRS-PEH-511B	B-Essential Chiller Unit Area Air Handling Unit Electric Heating Coil	PS/B	ESF	1yr	Mild	M	I	
133	VRS-PEH-511C	C-Essential Chiller Unit Area Air Handling Unit Electric Heating Coil	PS/B	ESF	1yr	Mild	M	I	
134	VRS-PEH-511D	D-Essential Chiller Unit Area Air Handling Unit Electric Heating Coil	PS/B	ESF	1yr	Mild	M	I	
135	VRS-RAH-531A	A-Charging Pump Area Air Handling Unit	R/B	ESF	1yr	Mild	M	I	
136	VRS-RAH-531B	B-Charging Pump Area Air Handling Unit	R/B	ESF	1yr	Mild	M	I	
137	VRS-RFN-531A	A-Charging Pump Area Air Handling Unit Fan	R/B	ESF	1yr	Mild	M	I	
138	VRS-RFN-531B	B-Charging Pump Area Air Handling Unit Fan	R/B	ESF	1yr	Mild	M	I	
139	VRS-RCC-531A	A-Charging Pump Area Air Handling Unit Cooling Coil	R/B	ESF	1yr	Mild	M	I	
140	VRS-RCC-531B	B-Charging Pump Area Air Handling Unit Cooling Coil	R/B	ESF	1yr	Mild	M	I	
141	(Deleted)								
142	(Deleted)								
143	VRS-REH-531A	A-Charging Pump Area Air Handling Unit Electric Heating Coil	R/B	ESF	1yr	Mild	M	I	
144	VRS-REH-531B	B-Charging Pump Area Air Handling Unit Electric Heating Coil	R/B	ESF	1yr	Mild	M	I	

Table 3D-2 US-APWR Environmental Qualification Equipment List
(Sheet 53 of 57)

Item Num	Equipment Tag	Description	Location	Purpose	Operational Duration	Environmental Conditions	Qualification Process	Seismic Category	Comments
			(PCCV, R/B, A/B, O/B,T/B, UHSRS)	RT, ESF, PAM, PB, Other		Harsh or Mild	E=Electrical M=Mechanical	I, II, Non	
145	VRS-RAH-541A	A-Annulus Emergency Exhaust Filtration Unit Area Air Handling Unit	R/B	ESF	1yr	Mild	M	I	
146	VRS-RAH-541B	B-Annulus Emergency Exhaust Filtration Unit Area Air Handling Unit	R/B	ESF	1yr	Mild	M	I	
147	VRS-RFN-541A	A-Annulus Emergency Exhaust Filtration Unit Area Air Handling Unit Fan	R/B	ESF	1yr	Mild	M	I	
148	VRS-RFN-541B	B-Annulus Emergency Exhaust Filtration Unit Area Air Handling Unit Fan	R/B	ESF	1yr	Mild	M	I	
149	VRS-RCC-541A	A-Annulus Emergency Exhaust Filtration Unit Area Air Handling Unit Cooling Coil	R/B	ESF	1yr	Mild	M	I	
150	VRS-RCC-541B	A-Annulus Emergency Exhaust Filtration Unit Area Air Handling Unit Cooling Coil	R/B	ESF	1yr	Mild	M	I	
151	VRS-RCC-541C	B-Annulus Emergency Exhaust Filtration Unit Area Air Handling Unit Cooling Coil	R/B	ESF	1yr	Mild	M	I	
152	VRS-RCC-541D	B-Annulus Emergency Exhaust Filtration Unit Area Air Handling Unit Cooling Coil	R/B	ESF	1yr	Mild	M	I	
153	VRS-REH-541A	A-Annulus Emergency Exhaust Filtration Unit Area Air Handling Unit Electric Heating Coil	R/B	ESF	1yr	Mild	M	I	
154	VRS-REH-541B	B-Annulus Emergency Exhaust Filtration Unit Area Air Handling Unit Electric Heating Coil	R/B	ESF	1yr	Mild	M	I	
155	VRS-RAH-551A	A-Penetration Area Air Handling Unit	R/B	ESF	1yr	Mild	M	I	
156	VRS-RAH-551B	B-Penetration Area Air Handling Unit	R/B	ESF	1yr	Mild	M	I	
157	VRS-RAH-551C	C-Penetration Area Air Handling Unit	R/B	ESF	1yr	Mild	M	I	
158	VRS-RAH-551D	D-Penetration Area Air Handling Unit	R/B	ESF	1yr	Mild	M	I	
159	VRS-RFN-551A	A-Penetration Area Air Handling Unit Fan	R/B	ESF	1yr	Mild	M	I	
160	VRS-RFN-551B	B-Penetration Area Air Handling Unit Fan	R/B	ESF	1yr	Mild	M	I	
161	VRS-RFN-551C	C-Penetration Area Air Handling Unit Fan	R/B	ESF	1yr	Mild	M	I	

Table 3D-2 US-APWR Environmental Qualification Equipment List
(Sheet 54 of 57)

Item Num	Equipment Tag	Description	Location	Purpose	Operational Duration	Environmental Conditions	Qualification Process	Seismic Category	Comments
			(PCCV, R/B, A/B, O/B,T/B, UHSRS)	RT, ESF, PAM, PB, Other		Harsh or Mild	E=Electrical M=Mechanical	I, II, Non	
162	VRS-RFN-551D	D-Penetration Area Air Handling Unit Fan	R/B	ESF	1yr	Mild	M	I	
163	VRS-RCC-551A	A-Penetration Area Air Handling Unit Cooling Coil	R/B	ESF	1yr	Mild	M	I	
164	VRS-RCC-551B	B-Penetration Area Air Handling Unit Cooling Coil	R/B	ESF	1yr	Mild	M	I	
165	VRS-RCC-551C	C-Penetration Area Air Handling Unit Cooling Coil	R/B	ESF	1yr	Mild	M	I	
166	VRS-RCC-551D	D-Penetration Area Air Handling Unit Cooling Coil	R/B	ESF	1yr	Mild	M	I	
167	VRS-REH-551A	A-Penetration Area Air Handling Unit Electric Heating Coil	R/B	ESF	1yr	Mild	M	I	
168	VRS-REH-551B	B-Penetration Area Air Handling Unit Electric Heating Coil	R/B	ESF	1yr	Mild	M	I	
169	VRS-REH-551C	C-Penetration Area Air Handling Unit Electric Heating Coil	R/B	ESF	1yr	Mild	M	I	
170	VRS-REH-551D	D-Penetration Area Air Handling Unit Electric Heating Coil	R/B	ESF	1yr	Mild	M	I	
Equipment (Containment Ventilation System)									
1	VCS-AOV-304	Air Operated Valve	R/B	ESF	5min	Mild	M	I	
2	VCS-AOV-305	Air Operated Valve	PCCV	ESF	5min	Harsh	M	I	
3	VCS-AOV-306	Air Operated Valve	PCCV	ESF	5min	Harsh	M	I	
4	VCS-AOV-307	Air Operated Valve	R/B	ESF	5min	Mild	M	I	
5	VCS-AOV-354	Air Operated Valve	R/B	ESF	5min	Mild	M	I	
6	VCS-AOV-355	Air Operated Valve	PCCV	ESF	5min	Harsh	M	I	
7	VCS-AOV-356	Air Operated Valve	PCCV	ESF	5min	Harsh	M	I	
8	VCS-AOV-357	Air Operated Valve	R/B	ESF	5min	Mild	M	I	
Equipment (Auxiliary Building Ventilation System)									
1	VAS-AOD-501A	Air Operated Damper	R/B	ESF	5min	Mild	M	I	
2	VAS-AOD-501B	Air Operated Damper	R/B	ESF	5min	Mild	M	I	
3	VAS-AOD-502A	Air Operated Damper	R/B	ESF	5min	Mild	M	I	

Table 3D-2 US-APWR Environmental Qualification Equipment List
(Sheet 55 of 57)

Item Num	Equipment Tag	Description	Location	Purpose	Operational Duration	Environmental Conditions	Qualification Process	Seismic Category	Comments
			(PCCV, R/B, A/B, O/B,T/B, UHSRS)	RT, ESF, PAM, PB, Other		Harsh or Mild	E=Electrical M=Mechanical	I, II, Non	
4	VAS-AOD-502B	Air Operated Damper	R/B	ESF	5min	Mild	M	I	
5	VAS-AOD-503A	Air Operated Damper	R/B	ESF	5min	Mild	M	I	
6	VAS-AOD-503B	Air Operated Damper	R/B	ESF	5min	Mild	M	I	
7	VAS-AOD-504A	Air Operated Damper	R/B	ESF	5min	Mild	M	I	
8	VAS-AOD-504B	Air Operated Damper	R/B	ESF	5min	Mild	M	I	
9	VAS-AOD-505A	Air Operated Damper	R/B	ESF	5min	Mild	M	I	
10	VAS-AOD-505B	Air Operated Damper	R/B	ESF	5min	Mild	M	I	
11	VAS-AOD-505C	Air Operated Damper	R/B	ESF	5min	Mild	M	I	
12	VAS-AOD-505D	Air Operated Damper	R/B	ESF	5min	Mild	M	I	
13	VAS-AOD-506A	Air Operated Damper	R/B	ESF	5min	Mild	M	I	
14	VAS-AOD-506B	Air Operated Damper	R/B	ESF	5min	Mild	M	I	
15	VAS-AOD-506C	Air Operated Damper	R/B	ESF	5min	Mild	M	I	
16	VAS-AOD-506D	Air Operated Damper	R/B	ESF	5min	Mild	M	I	
17	VAS-AOD-507A	Air Operated Damper	R/B	ESF	5min	Mild	M	I	
18	VAS-AOD-507B	Air Operated Damper	R/B	ESF	5min	Mild	M	I	
19	VAS-AOD-507C	Air Operated Damper	R/B	ESF	5min	Mild	M	I	
20	VAS-AOD-507D	Air Operated Damper	R/B	ESF	5min	Mild	M	I	
21	VAS-AOD-508A	Air Operated Damper	R/B	ESF	5min	Mild	M	I	
22	VAS-AOD-508B	Air Operated Damper	R/B	ESF	5min	Mild	M	I	
23	VAS-AOD-508C	Air Operated Damper	R/B	ESF	5min	Mild	M	I	
24	VAS-AOD-508D	Air Operated Damper	R/B	ESF	5min	Mild	M	I	
25	VAS-AOD-511	Air Operated Damper	R/B	ESF	5min	Mild	M	I	
26	VAS-AOD-512	Air Operated Damper	R/B	ESF	5min	Mild	M	I	
Equipment (Chilled Water System)									
1	VWS-PEQ-001A	A-Essential Chiller Unit	PS/B	ESF	1yr	Mild	M	I	
2	VWS-PEQ-001B	B-Essential Chiller Unit	PS/B	ESF	1yr	Mild	M	I	
3	VWS-PEQ-001C	C-Essential Chiller Unit	PS/B	ESF	1yr	Mild	M	I	
4	VWS-PEQ-001D	D-Essential Chiller Unit	PS/B	ESF	1yr	Mild	M	I	
5	VWS-PPP-001A	A-Essential Chilled Water Pump	PS/B	ESF	1yr	Mild	M	I	
6	VWS-PPP-001B	B-Essential Chilled Water Pump	PS/B	ESF	1yr	Mild	M	I	
7	VWS-PPP-001C	C-Essential Chilled Water Pump	PS/B	ESF	1yr	Mild	M	I	
8	VWS-PPP-001D	D-Essential Chilled Water Pump	PS/B	ESF	1yr	Mild	M	I	
9	VWS-PTK-001A	A-Essential Chilled Water Compression Tank	PS/B	ESF	1yr	Mild	M	I	
10	VWS-PTK-001B	B-Essential Chilled Water Compression Tank	PS/B	ESF	1yr	Mild	M	I	

Table 3D-2 US-APWR Environmental Qualification Equipment List
(Sheet 56 of 57)

Item Num	Equipment Tag	Description	Location	Purpose	Operational Duration	Environmental Conditions	Qualification Process	Seismic Category	Comments
			(PCCV, R/B, A/B, O/B,T/B, UHSRS)	RT, ESF, PAM, PB, Other		Harsh or Mild	E=Electrical M=Mechanical	I, II, Non	
11	VWS-PTK-001C	C-Essential Chilled Water Compression Tank	PS/B	ESF	1yr	Mild	M	I	
12	VWS-PTK-001D	D-Essential Chilled Water Compression Tank	PS/B	ESF	1yr	Mild	M	I	
13	VWS-TCV-2845	Chilled Water Control Valve	R/B	ESF	1yr	Mild	M	I	
14	VWS-TCV-2855	Chilled Water Control Valve	R/B	ESF	1yr	Mild	M	I	
15	VWS-TCV-2865	Chilled Water Control Valve	R/B	ESF	1yr	Mild	M	I	
16	VWS-TCV-2875	Chilled Water Control Valve	R/B	ESF	1yr	Mild	M	I	
17	VWS-TCV-2784	Chilled Water Control Valve	R/B	ESF	1yr	Mild	M	I	
18	VWS-TCV-2794	Chilled Water Control Valve	R/B	ESF	1yr	Mild	M	I	
19	VWS-TCV-2804	Chilled Water Control Valve	R/B	ESF	1yr	Mild	M	I	
20	VWS-TCV-2814	Chilled Water Control Valve	R/B	ESF	1yr	Mild	M	I	
21	VWS-TCV-2574	Chilled Water Control Valve	R/B	ESF	1yr	Mild	M	I	
22	VWS-TCV-2584	Chilled Water Control Valve	R/B	ESF	1yr	Mild	M	I	
23	VWS-TCV-2594	Chilled Water Control Valve	R/B	ESF	1yr	Mild	M	I	
24	VWS-TCV-2604	Chilled Water Control Valve	R/B	ESF	1yr	Mild	M	I	
25	VWS-TCV-2671	Chilled Water Control Valve	R/B	ESF	1yr	Mild	M	I	
26	VWS-TCV-2676	Chilled Water Control Valve	R/B	ESF	1yr	Mild	M	I	
27	VWS-TCV-2681	Chilled Water Control Valve	R/B	ESF	1yr	Mild	M	I	
28	VWS-TCV-2686	Chilled Water Control Valve	R/B	ESF	1yr	Mild	M	I	
29	VWS-TCV-2721A	Chilled Water Control Valve	R/B	ESF	1yr	Mild	M	I	
30	VWS-TCV-2721B	Chilled Water Control Valve	R/B	ESF	1yr	Mild	M	I	
31	VWS-TCV-2721C	Chilled Water Control Valve	R/B	ESF	1yr	Mild	M	I	
32	VWS-TCV-2721D	Chilled Water Control Valve	R/B	ESF	1yr	Mild	M	I	
33	VWS-TCV-2726A	Chilled Water Control Valve	PS/B	ESF	1yr	Mild	M	I	
34	VWS-TCV-2726B	Chilled Water Control Valve	PS/B	ESF	1yr	Mild	M	I	
35	VWS-TCV-2726C	Chilled Water Control Valve	PS/B	ESF	1yr	Mild	M	I	
36	VWS-TCV-2726D	Chilled Water Control Valve	PS/B	ESF	1yr	Mild	M	I	
37	VWS-TCV-2731	Chilled Water Control Valve	R/B	ESF	1yr	Mild	M	I	
38	(Deleted)								
39	(Deleted)								

Table 3D-2 US-APWR Environmental Qualification Equipment List
(Sheet 57 of 57)

Item Num	Equipment Tag	Description	Location	Purpose	Operational Duration	Environmental Conditions	Qualification Process	Seismic Category	Comments
			(PCCV, R/B, A/B, O/B,T/B, UHSRS)	RT, ESF, PAM, PB, Other		Harsh or Mild	E=Electrical M=Mechanical	I, II, Non	
40	VWS-TCV-2736	Chilled Water Control Valve	R/B	ESF	1yr	Mild	M	I	
41	VWS-TCV-2741A	Chilled Water Control Valve	R/B	ESF	1yr	Mild	M	I	
42	VWS-TCV-2741B	Chilled Water Control Valve	R/B	ESF	1yr	Mild	M	I	
43	VWS-TCV-2746A	Chilled Water Control Valve	R/B	ESF	1yr	Mild	M	I	
44	VWS-TCV-2746B	Chilled Water Control Valve	R/B	ESF	1yr	Mild	M	I	
45	VWS-TCV-2331	Chilled Water Control Valve	R/B	ESF	1yr	Mild	M	I	
46	VWS-TCV-2336	Chilled Water Control Valve	R/B	ESF	1yr	Mild	M	I	
47	VWS-TCV-2341	Chilled Water Control Valve	R/B	ESF	1yr	Mild	M	I	
48	VWS-TCV-2346	Chilled Water Control Valve	R/B	ESF	1yr	Mild	M	I	
49	VWS-MOV-403	Motor Operated Valve	R/B	ESF	5min	Mild	M	I	
50	VWS-MOV-407	Motor Operated Valve	R/B	ESF	5min	Mild	M	I	
51	VWS-VLV-253A	Safety Valve	PS/B	ESF	1yr	Mild	M	I	
52	VWS-VLV-253B	Safety Valve	PS/B	ESF	1yr	Mild	M	I	
53	VWS-VLV-253C	Safety Valve	PS/B	ESF	1yr	Mild	M	I	
54	VWS-VLV-253D	Safety Valve	PS/B	ESF	1yr	Mild	M	I	
55	VWS-VLV-405	Safety Valve	PCCV	ESF	1yr	Harsh	M	I	
56	VWS-MOV-411A	Motor Operated Valve	PCCV	PB	1yr	Harsh	M	I	
57	VWS-MOV-411B	Motor Operated Valve	PCCV	PB	1yr	Harsh	M	I	
58	VWS-MOV-411C	Motor Operated Valve	PCCV	PB	1yr	Harsh	M	I	
59	VWS-MOV-411D	Motor Operated Valve	PCCV	PB	1yr	Harsh	M	I	
60	VWS-TCV-412A	Chilled Water Control Valve	PCCV	PB	1yr	Harsh	M	I	
61	VWS-TCV-412B	Chilled Water Control Valve	PCCV	PB	1yr	Harsh	M	I	
62	VWS-TCV-412C	Chilled Water Control Valve	PCCV	PB	1yr	Harsh	M	I	
63	VWS-TCV-412D	Chilled Water Control Valve	PCCV	PB	1yr	Harsh	M	I	
64	VWS-MOV-414	Motor Operated Valve	PCCV	PB	1yr	Harsh	M	I	

APPENDIX 3E

HIGH ENERGY AND MODERATE ENERGY PIPING IN THE PRESTRESSED CONCRETE CONTAINMENT VESSEL AND REACTOR BUILDING

CONTENTS

Page

3E High Energy and Moderate Energy Piping in the Prestressed Concrete Containment Vessel and Reactor Building

3E.1 Introduction 3E-1

3E.2 Figures 3E-2

Figures

Page

Figure 3E-1 Reactor Coolant System Flow Diagram (1/2) 3E-2
Figure 3E-2 Reactor Coolant System Flow Diagram (2/2) 3E-3
Figure 3E-3 Chemical and Volume Control System Flow Diagram (1/4) 3E-4
Figure 3E-4 Chemical and Volume Control System Flow Diagram (2/4) 3E-5
Figure 3E-5 Chemical and Volume Control System Flow Diagram (3/4) 3E-6
Figure 3E-6 Chemical and Volume Control System Flow Diagram (4/4) 3E-7
Figure 3E-7 Safety Injection System Flow Diagram 3E-8
Figure 3E-8 Emergency Feed Water System Flow Diagram (1/2) 3E-9
Figure 3E-9 Emergency Feedwater System Flow Diagram (2/2) 3E-10
Figure 3E-10 Main Feed Water System Flow Diagram 3E-11
Figure 3E-11 Main Steam System Flow Diagram (1/2) 3E-12
Figure 3E-12 Main Steam System Flow Diagram (2/2) 3E-13
Figure 3E-13 Steam Generator Blowdown System Flow Diagram 3E-14

ACRONYMS AND ABBREVIATIONS

LBB	leak-before-break
PCCV	prestressed concrete containment vessel
R/B	reactor building

3E High Energy and Moderate Energy Piping in the Prestressed Concrete Containment Vessel and Reactor Building

3E.1 Introduction

This appendix identifies high-energy piping in the prestressed concrete containment vessel (PCCV) and reactor building (R/B) with a diameter greater than 1 inch. Piping selected for leak-before-break (LBB) criteria (see Appendix 3B) are also identified in these figures. These figures identify piping in the break exclusion zones outside containment. One inch piping and smaller are not included in these figures. Instrumentation and instrument lines are not included.

High-energy piping includes those systems or portion of systems that, during normal plant operating conditions, are either in operation or maintained pressurized at operating temperature that exceed 200°F or the maximum operating pressure 275 psig. Piping systems or portion of systems pressurized above atmospheric pressure during normal plant conditions and not identified as high-energy are considered moderate energy. Piping systems that exceed 200°F or 275 psig for 2% or less of the time during which the system is in operation are considered moderate energy. Breaks in high-energy piping greater than 1 inch are postulated based on the criteria provided in Subsection 3.6.2. Breaks are not postulated in high-energy piping system meeting the LBB criteria defined in Subsection 3.6.3.

LEGEND:

| | | | | | Candidate LBB Piping

High Energy Break Exclusion Zone Piping
(diameter is greater than 1 inch)

Other High Energy Piping in PCCV and R/B
(diameter is greater than 1 inch)

△ Boundary

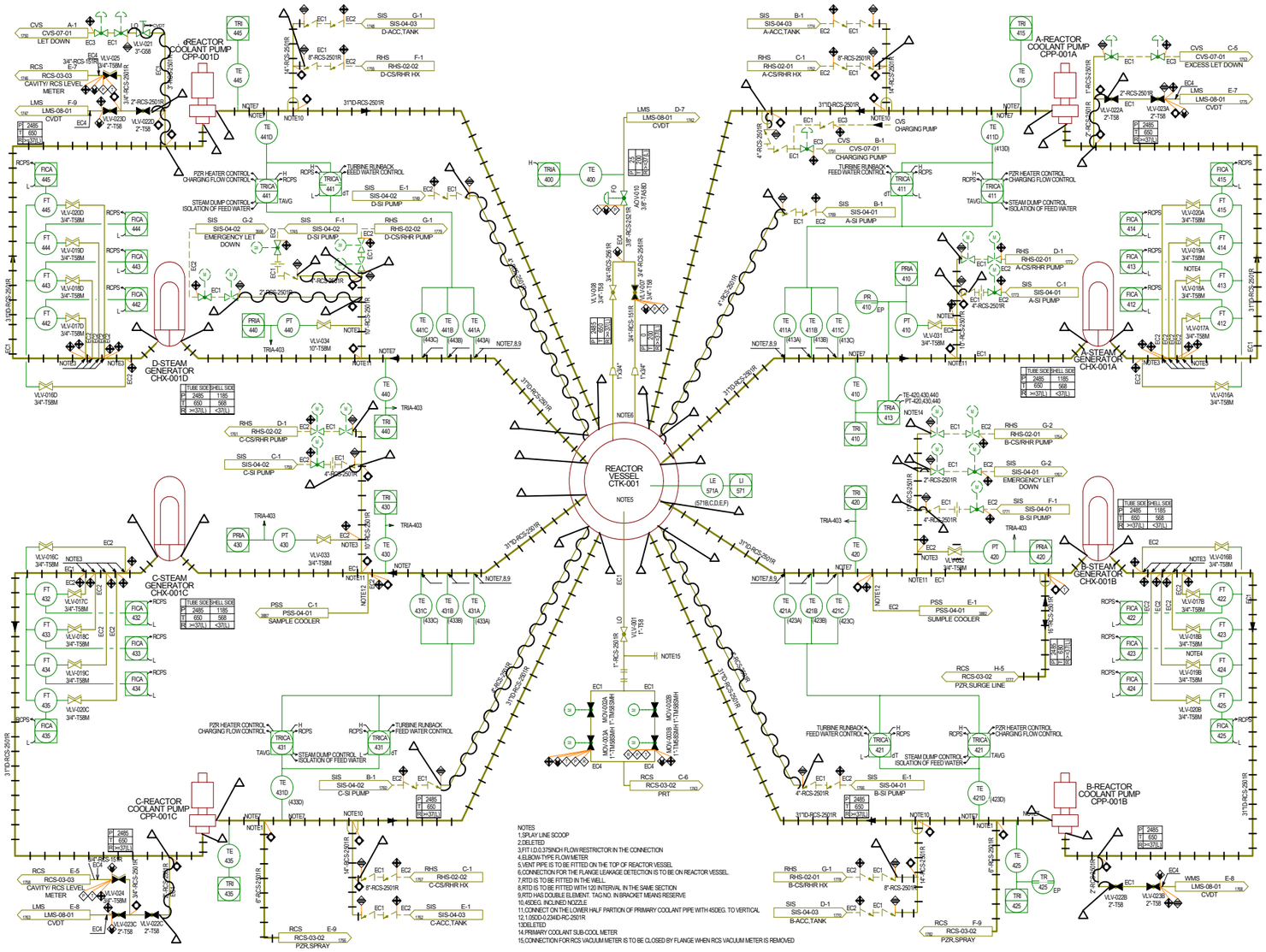

Figure 3E-1 Reactor Coolant System Flow Diagram (1/2)

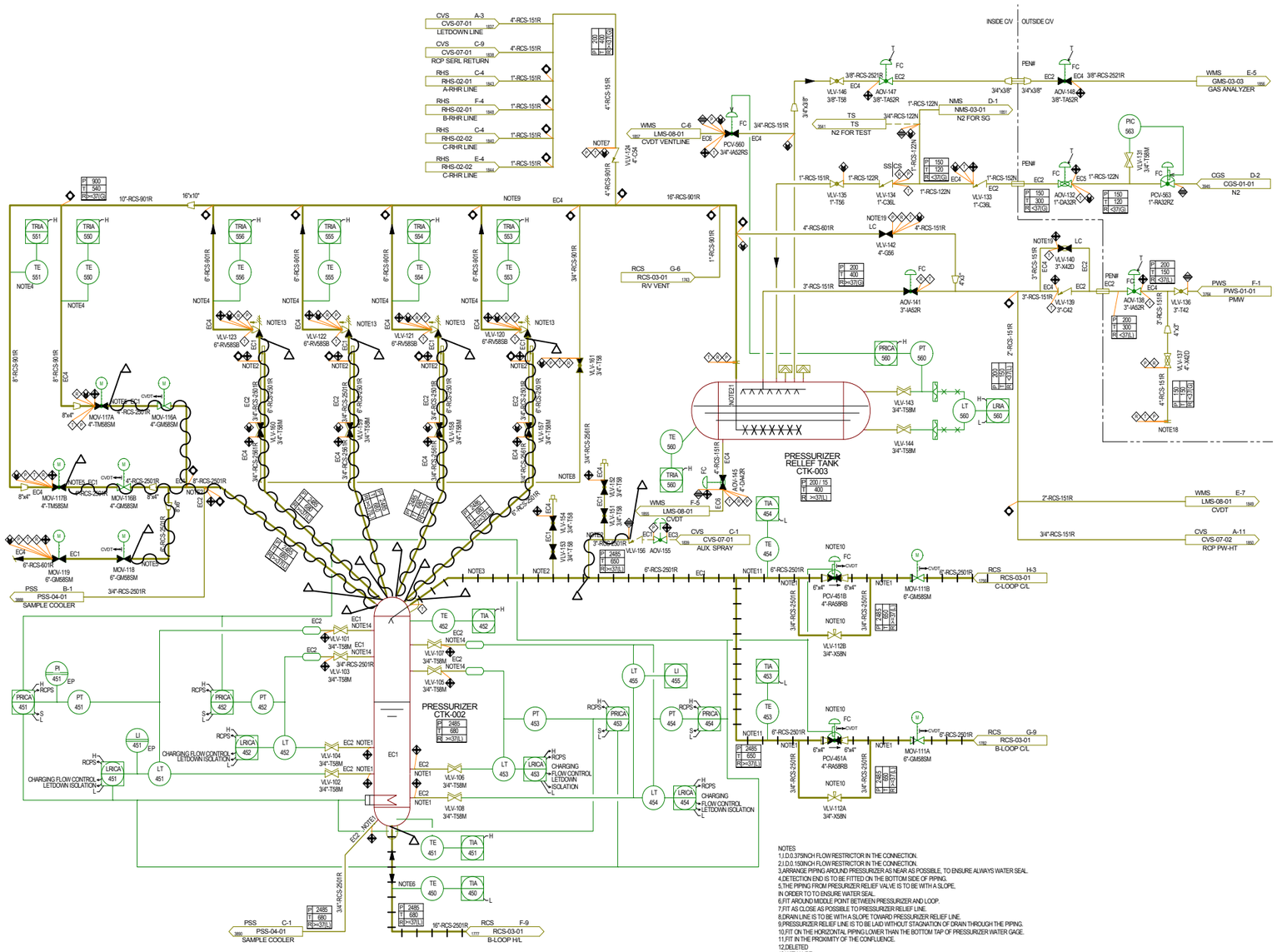

NOTES
1.I.D.0.375INCH FLOW RESTRICTOR IN THE CONNECTION.
2.I.D.0.150INCH FLOW RESTRICTOR IN THE CONNECTION.
3.ARRANGE PIPING AROUND PRESSURIZER AS NEAR AS POSSIBLE. TO ENSURE ALWAYS WATER SEAL.
4.DETECTION END IS TO BE FITTED ON THE BOTTOM SIDE OF PIPING.
5.THE PIPING FROM PRESURIZER RELIEF VALVE IS TO BE WITH A SLOPE.
IN ORDER TO TO ENSURE WATER SEAL.
6.FIT AROUND MIDDLE POINT BETWEEN PRESSURIZER AND LOOP.
7.FIT AS CLOSE AS POSSIBLE TO PRESSURIZER RELIEF LINE.
8.DRAIN LINE IS TO BE WITH A SLOPE TOWARD PRESSURIZER RELIEF LINE.
9.PRESSURIZER RELIEF LINE IS TO BE LAID WITHOUT STAGNATION OF DRAIN THROUGH THE PIPING.
10.FIT ON THE HORIZONTAL PIPING LOWER THAN THE BOTTOM TAP OF PRESSURIZER WATER GAGE.
11.FIT IN THE PROXIMITY OF THE CONFLUENCE.
12.DELETED
13.WITH LVDT
14.FIT THE HANDLE HORIZONTALLY.
15.DELETED
16.DELETED
17.DELETED
18.LINE FOR CONNECTING VACUUM VENTING INSTRUMENT CLOSED BY FLANGE WHEN VACUUM VENTING ENDS.
19.VALVE IS OPENED ONLY AT VACUUM VENTING.
20.DELETED
21.PROVIDE VENT HOLE.

Figure 3E-2 Reactor Coolant System Flow Diagram (2/2)

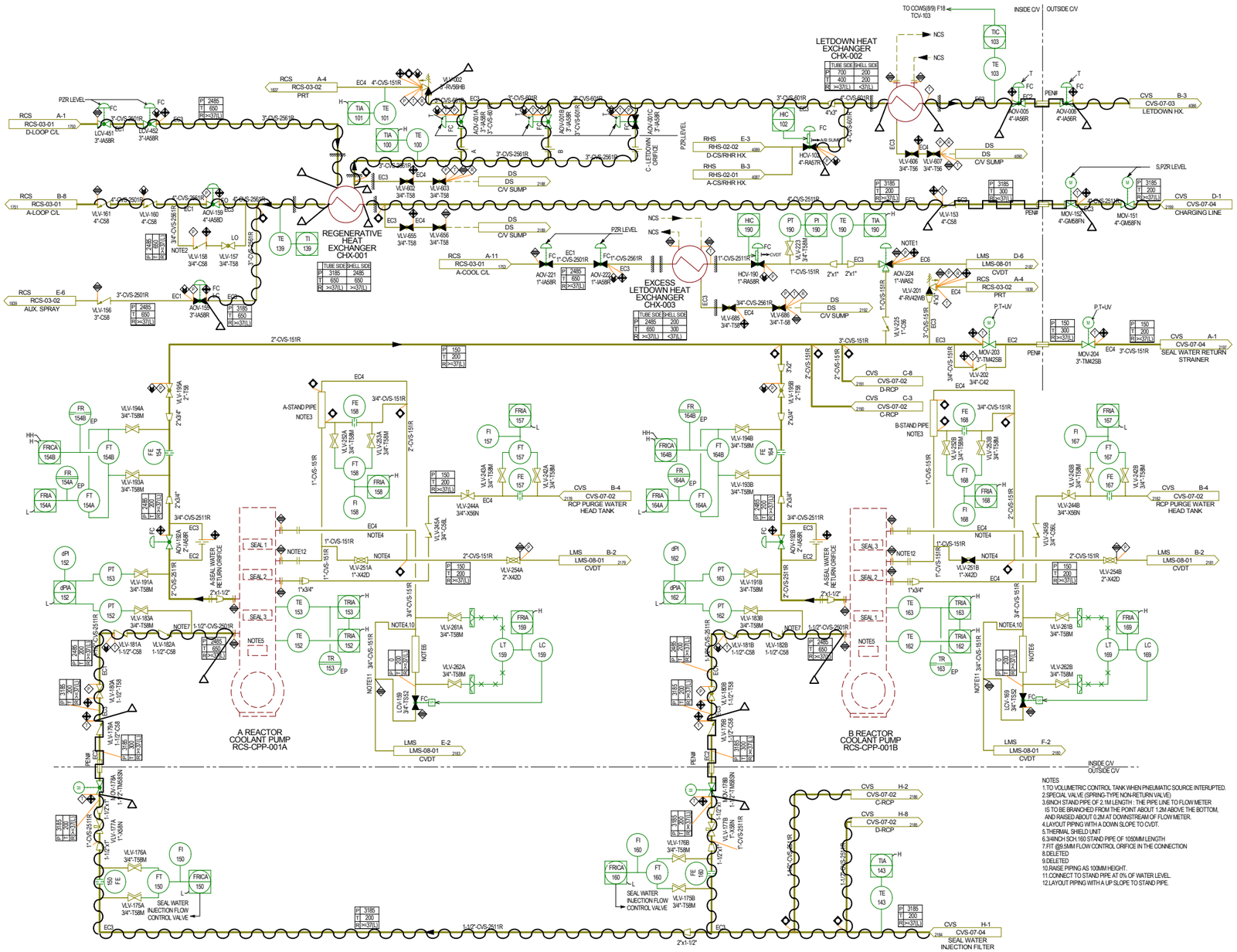

Figure 3E-3 Chemical and Volume Control System Flow Diagram (1/4)

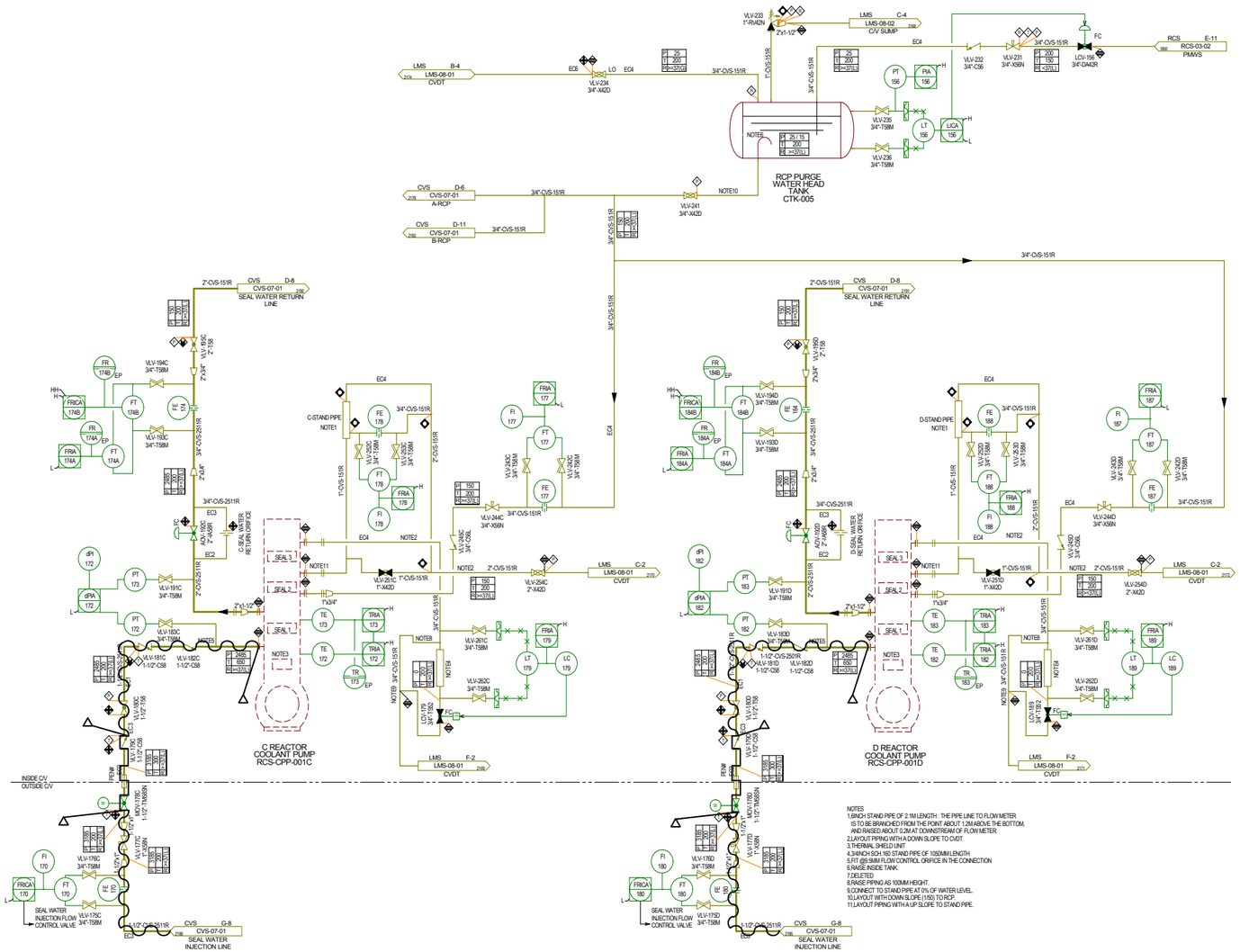

Figure 3E-4 Chemical and Volume Control System Flow Diagram (2/4)

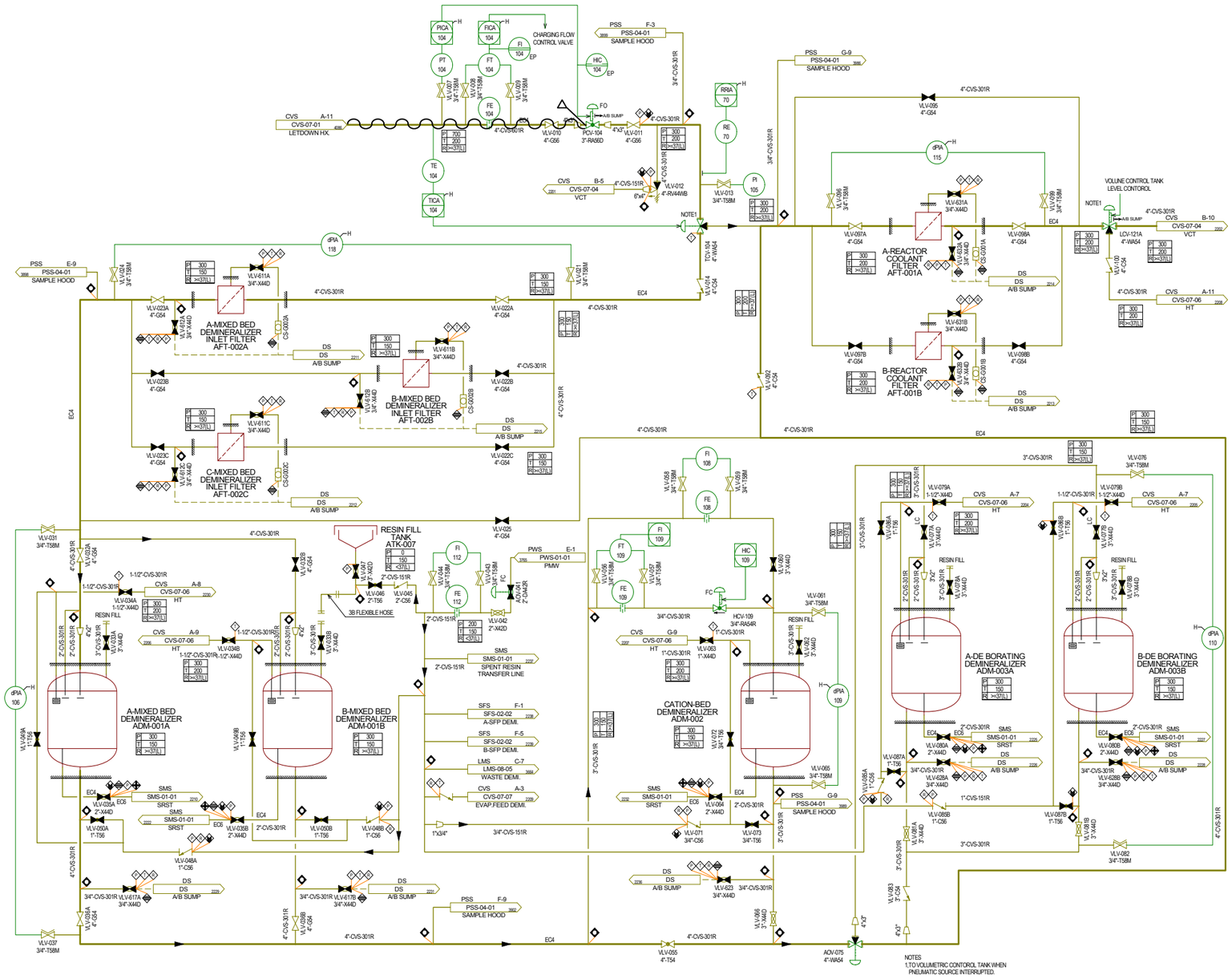

Figure 3E-5 Chemical and Volume Control System Flow Diagram (3/4)

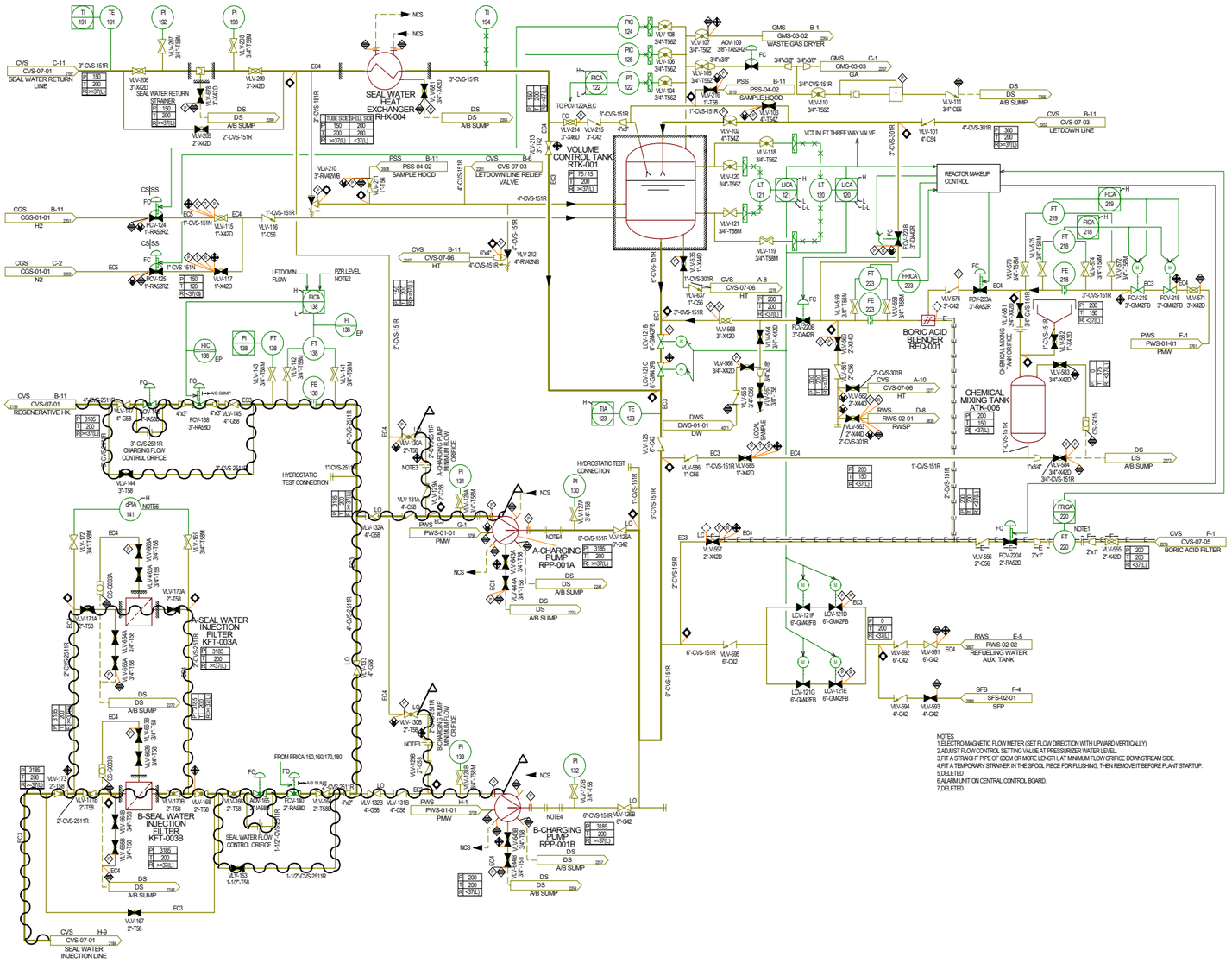

Figure 3E-6 Chemical and Volume Control System Flow Diagram (4/4)

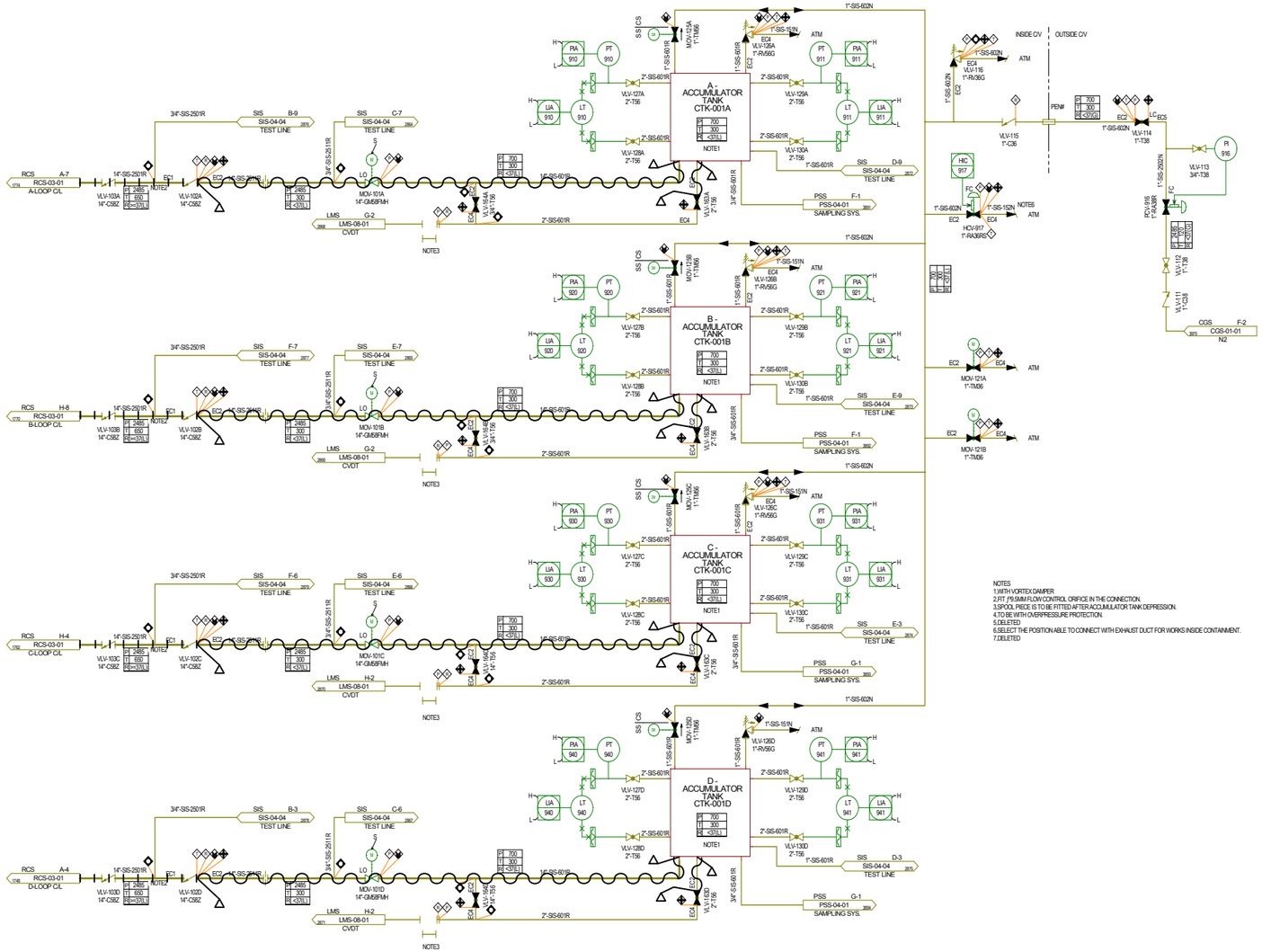

NOTES
1.WITH VORTEX DAMPER
2.FIT Ø9.5MM FLOW CONTROL ORIFICE IN THE CONNECTION.
3.SPOOL PIECE IS TO BE FITTED AFTER ACCUMULATOR TANK DEPRESSION.
4.TO BE WITH OVERPRESSURE PROTECTION.
5.DELETED
6.SELECT THE POSITION ABLE TO CONNECT WITH EXHAUST DUCT FOR WORKS INSIDE CONTAINMENT.
7.DELETED

Figure 3E-7 Safety Injection System Flow Diagram

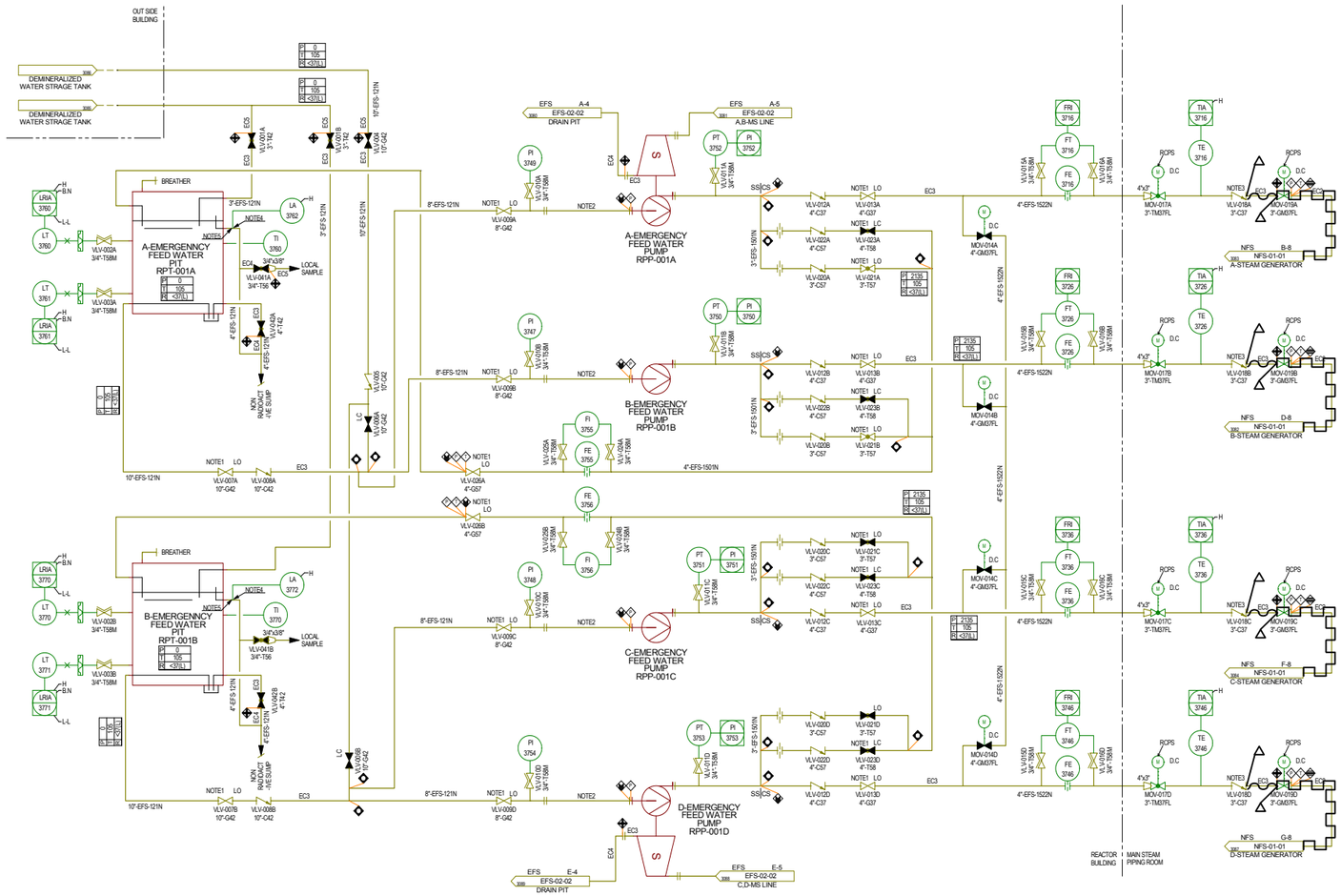

NOTES
1.MANUAL VALVE WITH LIMIT SWITCH.
2.TEMPORARY STRAINER CAN BE INSTALLED DURING TEST OPERATION.
3.LOCATE AS CLOSE TO MAIN FEEDWATER PIPING AS POSSIBLE.
4.CONNECTION FOR OVERFLOWDETECTION.
CONNECTION MUST BE MADE ON THE HORIZONTAL PORTION OF THE OVERFLOW LINE.
TO AVOID HIGH WATER LEVEL ALARM CONDITIONS OF THE PIT,
THERE SHOULD BE SUFFICIENT DISTANCE BETWEEN THE OVERFLOW NOZZLE AND THE U-SEAL.
5.THE PIPELINE SHOULD BE VERTICALLY DESCENDING TO PREVENT CLOGGING.

Figure 3E-8 Emergency Feed Water System Flow Diagram (1/2)

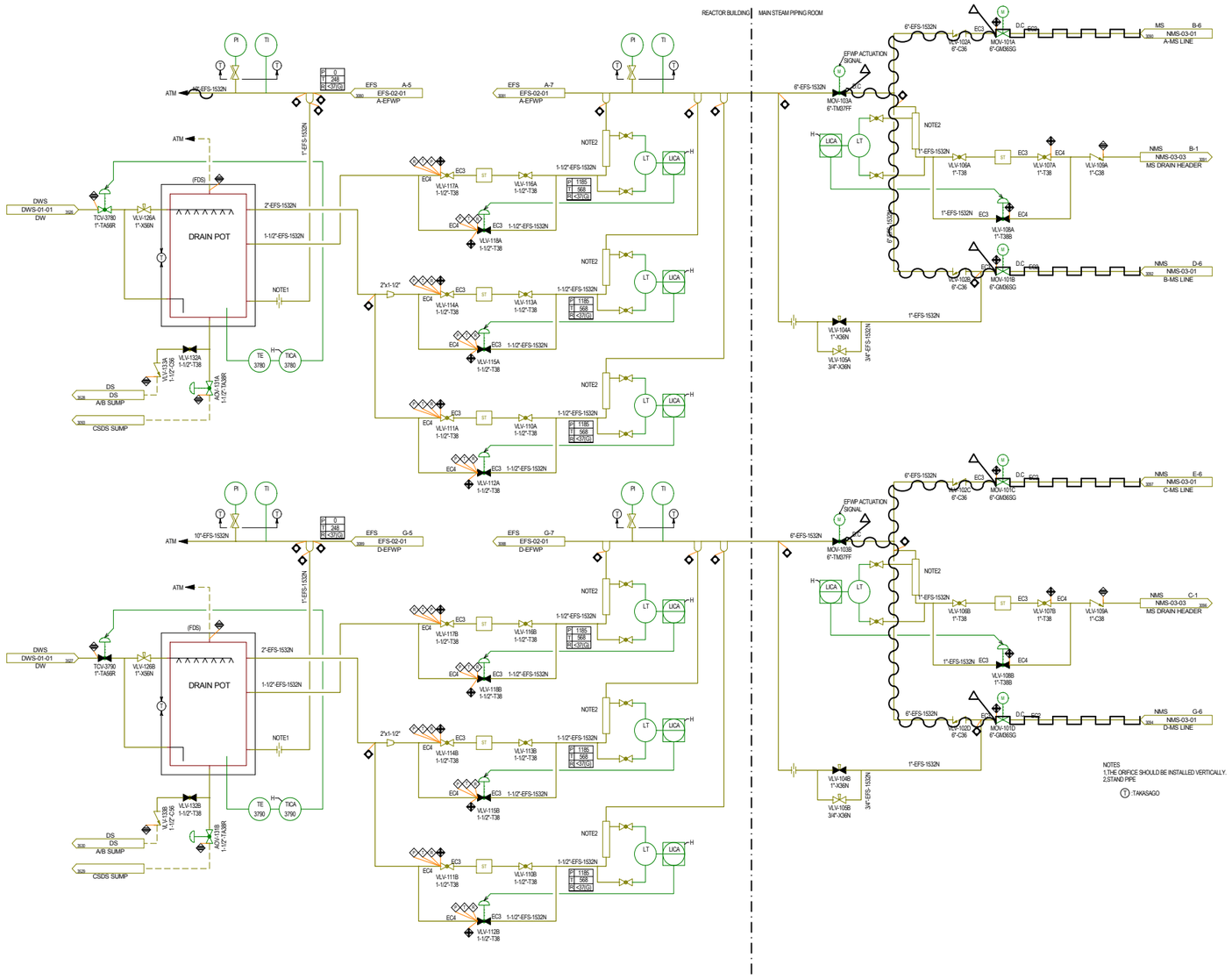

Figure 3E-9 Emergency Feedwater System Flow Diagram (2/2)

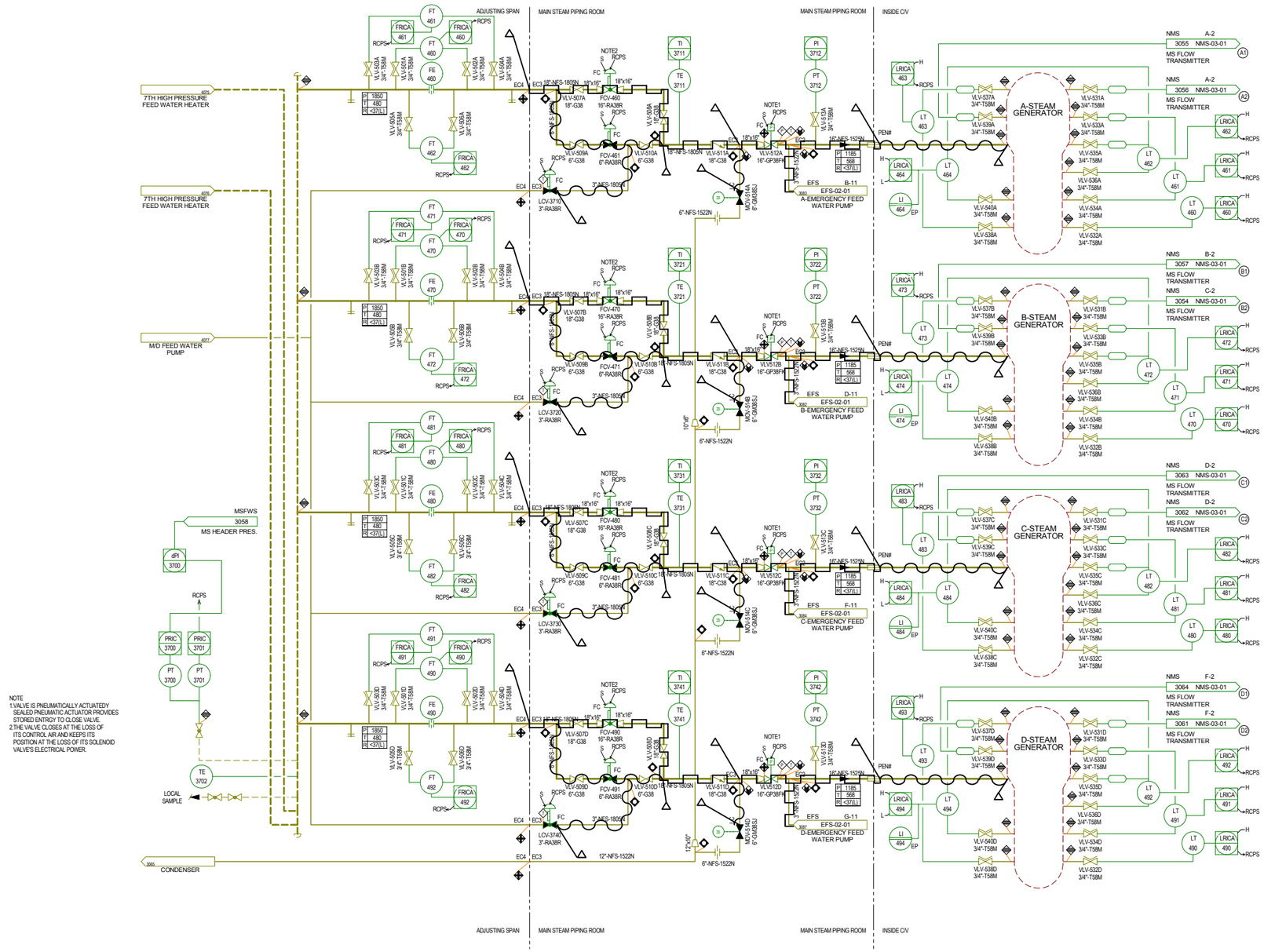

Figure 3E-10 Main Feed Water System Flow Diagram

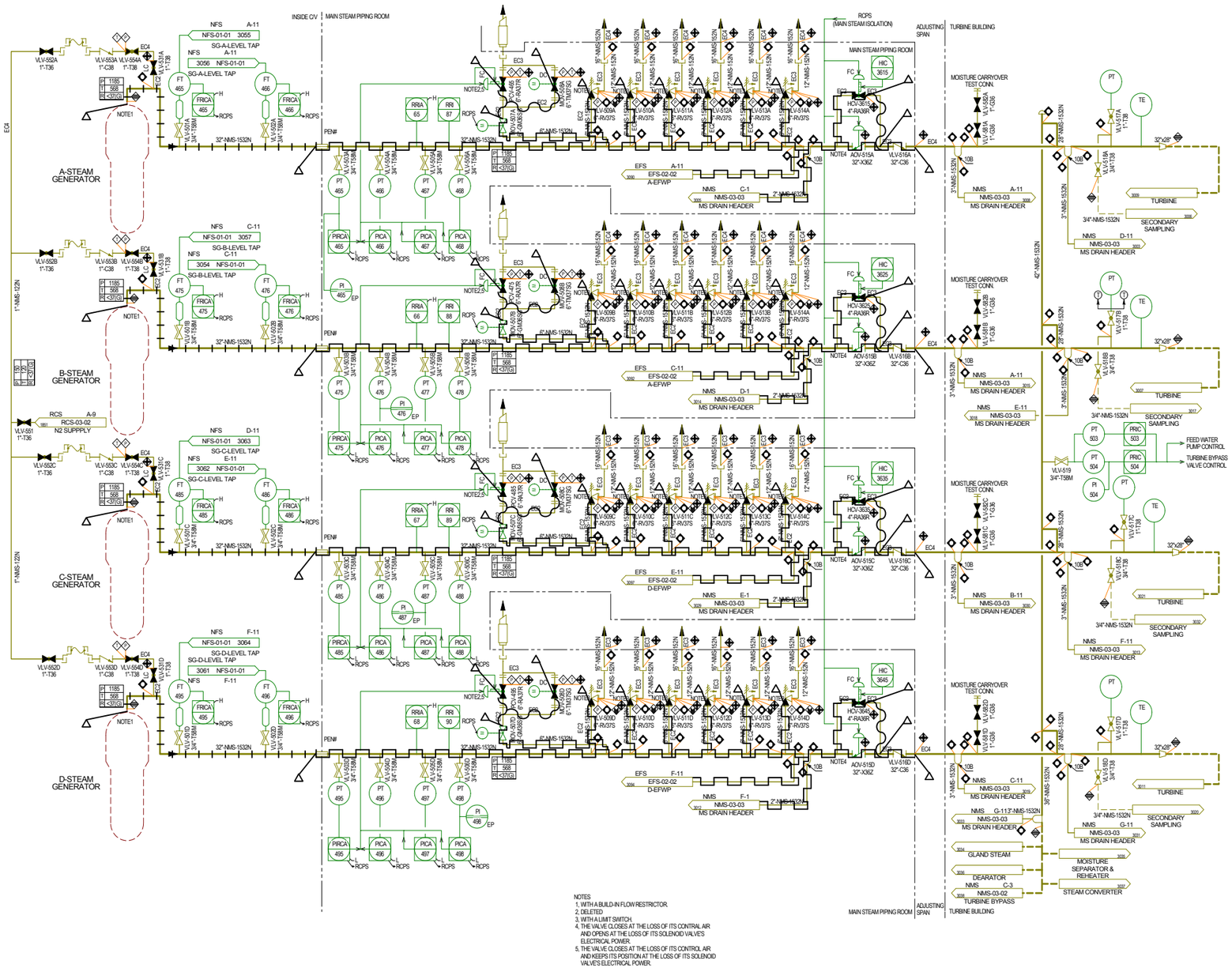

Figure 3E-11 Main Steam System Flow Diagram (1/2)

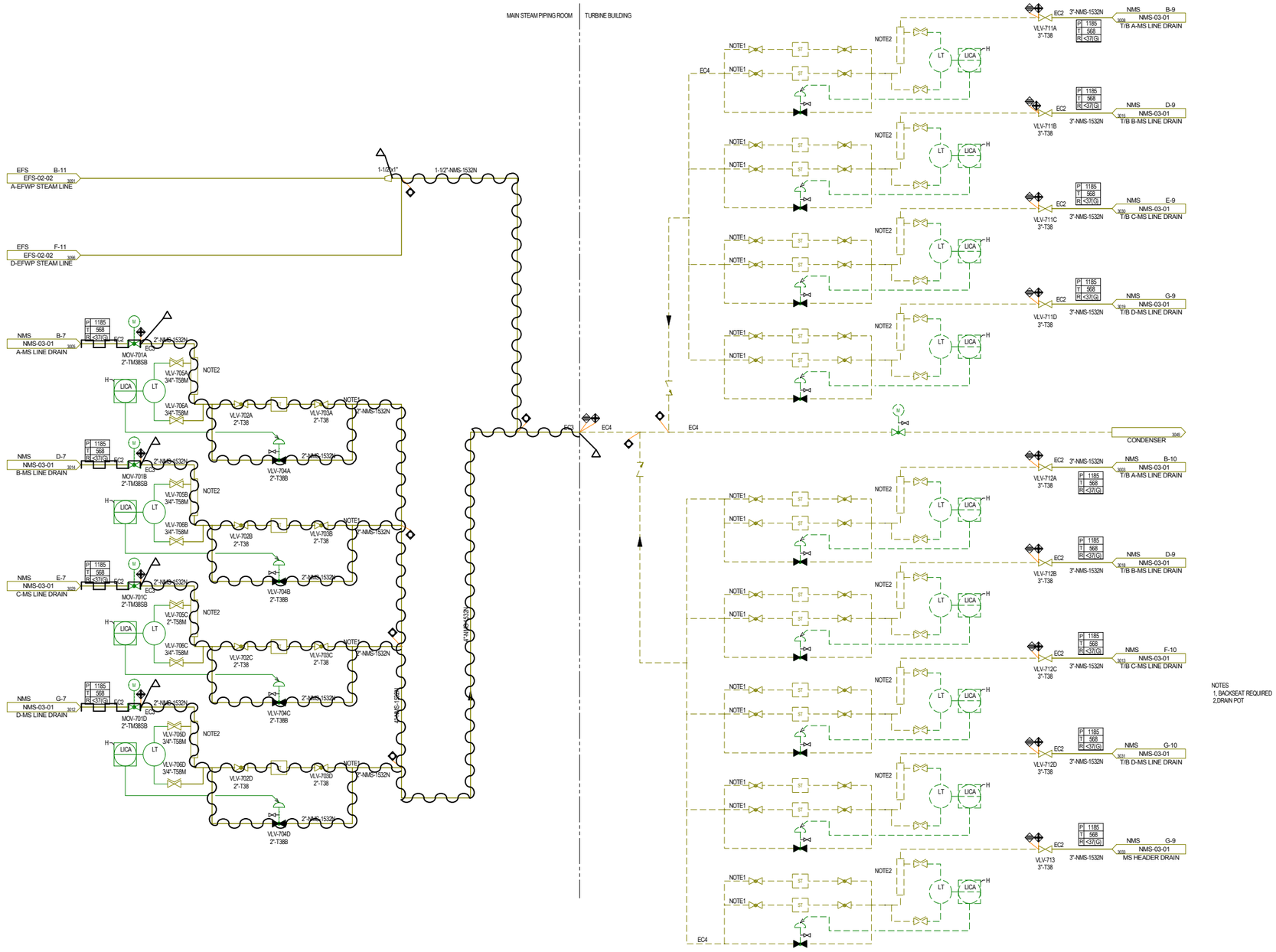

Figure 3E-12 Main Steam System Flow Diagram (2/2)

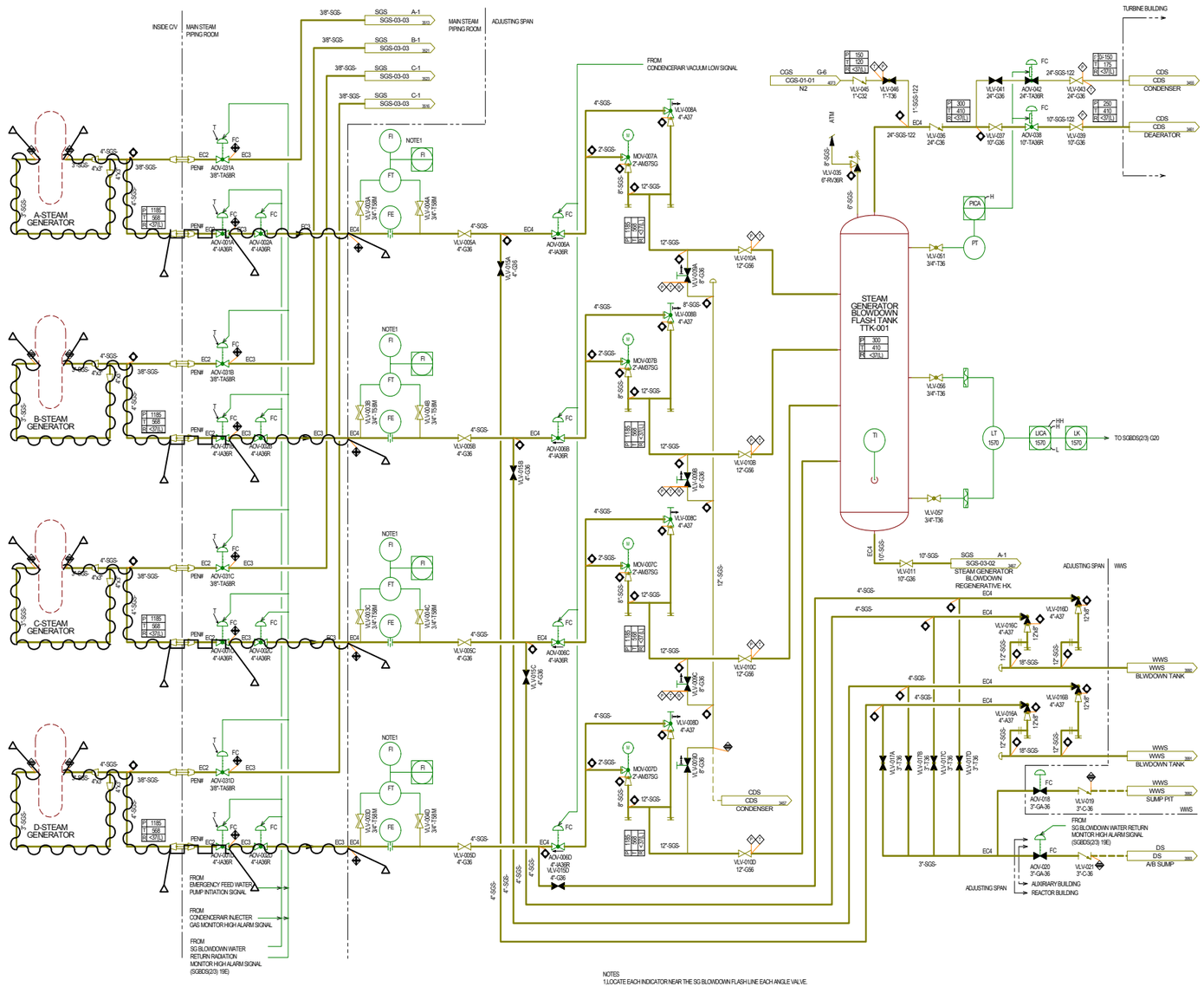

Figure 3E-13 Steam Generator Blowdown System Flow Diagram

APPENDIX 3F

DESIGN OF CONDUIT AND CONDUIT SUPPORTS

CONTENTS

Page

3F Design of Conduit and Conduit Supports

3F.1 Description....3F-1

3F.1.1 Seismic Category I Conduit Systems....3F-1

3F.1.2 Seismic Category II Conduit Systems....3F-1

3F.2 Applicable Codes, Standards, and Specifications....3F-2

3F.3 Loads and Load Combinations....3F-2

3F.3.1 Loads....3F-2

3F.3.2 Load Combinations....3F-2

3F.4 Design and Analysis Procedures....3F-2

3F.4.1 Equivalent Static Analysis....3F-3

3F.4.2 Response Spectrum Modal Analysis....3F-3

3F.5 Structural Acceptance Criteria....3F-3

3F.5.1 Allowable Stresses....3F-3

3F.5.1.1 Conduit....3F-3

3F.5.1.2 Conduit Supports....3F-3

3F.5.2 Deflection Limitations....3F-3

3F.6 Materials....3F-3

3F.6.1 Cold Formed Steel Shapes....3F-3

3F.6.2 Structural Steel Shapes....3F-4

3F.6.3 Conduit....3F-4

3F.6.4 Electrical Boxes....3F-4

3F.6.5 Welding....3F-4

3F.6.6 Anchor Bolts....3F-4

3F.6.7 Bolts 3F-4

3F.7 References 3F-4

ACRONYMS AND ABBREVIATIONS

AISC	American Institute of Steel Construction
AISI	American Iron and Steel Institute
ANSI	American National Standards Institute
AWS	American Welding Society
CSDRS	certified seismic design response spectra
ERAC	Electrical Rigid Aluminum Conduit
ERSC	Electrical Rigid Steel Conduit
FIRS	foundation input response spectra
GMRS	ground motion response spectra
NEC	National Electric Code
NEMA	National Electrical Manufacturer Association
NFPA	National Fire Protection Association
SSC	structure, system, and component
SSE	safe-shutdown earthquake

3F Design of Conduit and Conduit Supports

3F.1 Description

Conduit is a means of routing electrical and fiber optic cable to and from termination points in equipment and cable tray. The conduit assures electrical and fiber optic cables are protected from various means of damage. Conduit supports are the means by which conduit is supported and protected from seismic events and other postulated loads. The term conduit and conduit supports includes electrical rigid and flexible conduit of various material types and diameters, a variety of conduit support configurations, junction boxes and their supports, and conduit fittings (hereafter referred as conduit systems). Conduit containing non-Class 1E cable in seismic category II and non-seismic structures are not required to satisfy the requirements of this appendix.

In general, the design of conduit and conduit supports is accomplished through the following steps:

- Determine applicable load combinations and corresponding allowable stresses for conduit and conduit supports.
- Limit spacing of conduit supports to maintain conduit stresses within allowable stresses corresponding to the applicable load combinations.
- Assure maximum stresses are within allowable stresses corresponding to the applicable load combination.
- Provide system bracing to control seismic movement and interaction with other category I, structures, systems, and components (SSCs).

3F.1.1 Seismic Category I Conduit Systems

Seismic category I conduit systems, electrical conduit containing 1E cable, are designed for all applicable load combinations to maintain structural integrity within stress limits. This is achieved by analyzing the conduit system and limiting support spacing to maintain critical stresses to acceptably low levels. The seismic qualification of conduit systems, including supporting brackets, is to satisfy the safe-shutdown earthquake (SSE) requirements of the plant system(s) for which it is associated. Seismic category I conduit systems, including support anchorages, in the US-APWR, standard plant seismic category I structures are analyzed and designed for a SSE which is equivalent to the in-structure response spectra developed from the certified seismic design response spectra (CSDRS). Site-specific seismic category I structures are analyzed and designed using as a minimum the site-specific SSE developed from the site-specific ground motion response spectra (GMRS) and foundation input response spectra (FIRS).

3F.1.2 Seismic Category II Conduit Systems

Seismic category II conduit systems, electrical conduit containing non-1E cable in seismic category I buildings, are not essential for safe shutdown of the plant and need not remain functional during, and after, a SSE. However, such conduit systems must not fall or displace excessively where they could damage any seismic category I SSCs. Seismic category II conduit systems, including support anchorages, are therefore analyzed and designed using the same methods and stress limits specified for seismic

category I structures and subsystems, except structural steel in-plane stress limits are permitted to reach 1.0 F_y.

3F.2 Applicable Codes, Standards, and Specifications

Conduits are manufactured to satisfy the American National Standard Institute (ANSI) C80.1 American Standard for Electrical Rigid Steel Conduit (ERSC), (Reference 3F-1) or ANSI C80.5, American Standard for Electrical Rigid Aluminum Conduit (ERAC), (Reference 3F-2), as applicable. Junction boxes are manufactured to satisfy the National Electrical Manufacturer Association (NEMA) Standards Publication 250 Enclosures for Electrical Equipment (1000 Volts Maximum) (Reference 3F-3). Installation of the conduit system conforms to the requirements of the National Fire Protection Associations (NFPA) 70, National Electric Code (NEC), (Reference 3F-4).

The American Iron and Steel Institute (AISI) Specification for the Design of Cold-Formed Steel Members (Reference 3F-5) provides the methodology for structurally evaluating cold formed steel shapes, as applicable. Structural steel shapes used for supports are designed and constructed in accordance with the American Institute of Steel Construction (AISC) Specification for the Design, Fabrication, and Erection of Steel Safety Related Structures for Nuclear Facilities (Reference 3F-6). Welding is evaluated and performed in accordance with the American Welding Society (AWS) Standard D1.1 Structural Welding Code, (Reference 3F-7).

3F.3 Loads and Load Combinations

3F.3.1 Loads

Conduit systems are designed for dead, live, seismic, and thermal loads, as applicable. Design dead load includes the working load (weight) of cables permitted in the conduit. In addition, any accessory loads to the conduit and conduit supports are included in the qualification of the conduit and conduit supports.

3F.3.2 Load Combinations

Refer to Subsection 3.8.4.3 for various load combinations applicable to seismic category I SSCs.

Seismic category II conduit and conduit supports are qualified for the applicable SSE to assure they do not damage any seismic category I SSCs by falling or displacing excessively under any seismic loads. Seismic category II conduit supports are, therefore, qualified for maximum seismic load combinations and associated allowable stresses as discussed in Subsection 3.8.4.3.

3F.4 Design and Analysis Procedures

Refer to Section 3.7 for seismic system analysis and qualification requirements of seismic category I and seismic category II SSCs and their supports.

3F.4.1 Equivalent Static Analysis

Equivalent static analysis determined seismic loads for conduit and conduit support systems as detailed in Subsection 3.7.2.1. The mass considered included nominal size weights, concentrated weights, support members, cable, insulation, conduit (including cantilevers), flexible conduit, and other applicable components.

3F.4.2 Response Spectrum Modal Analysis

For more exact results, conduit systems can be analyzed using the envelope broadened response spectra methods, considering uniform support motion, or the independent support motion method.

3F.5 Structural Acceptance Criteria

3F.5.1 Allowable Stresses

Allowable stress coefficients are applied in accordance with basic allowables of AISC or AISI. Refer to Subsection 3.8.4.5 for combination of appropriate allowable stresses with the appropriate load combinations and material specifications

3F.5.1.1 Conduit

Conduits containing Class 1E cables are designed to withstand the combined effects of normal operating loads (dead weight) acting simultaneously with the seismic loadings.

3F.5.1.2 Conduit Supports

Seismic category I and seismic category II supports are designed to withstand the combined effects of normal operating loads (dead weight) acting simultaneously with the seismic loadings.

3F.5.2 Deflection Limitations

No specific deflection limitations for seismic category I and seismic category II conduit systems are applicable. These components are designed not to fall during a seismic event. Additionally, displacements are limited to prevent potential adverse interactions with adjacent commodities. Refer to Subsection 3.7.2.8 for criteria relating to seismic interaction of structures or systems adjacent to seismic category I SSCs.

When conduits cross between adjacent buildings, the potential for differential movements is accommodated through lengths of flexible conduit and/or evaluation of induced stresses. Differential displacements caused by seismic motion are obtained at the conduit elevation using seismic analysis reports for each building.

3F.6 Materials

3F.6.1 Cold Formed Steel Shapes

Cold formed steel shapes that may be used as support members satisfy the requirements specified in Reference 3F-5.

3F.6.2 Structural Steel Shapes

The design, fabrication and installation of structural steel supports, and structural shapes and plates used in support construction, comply with AISC-N690-1994 (Reference 3F-6).

3F.6.3 Conduit

ERSC conforms to ANSI C80.1 (Reference 3F-1).

ERAC conforms to ANSI C80.5 (Reference 3F-2).

3F.6.4 Electrical Boxes

Electrical Boxes conform to NEMA Standards Publication 250 (Reference 3F-3).

3F.6.5 Welding

Welding electrodes are E70 series for structural steel shapes greater than 3/16th inch thick or E60 series for structural steel shapes less than or equal to 3/16th inch thick, in accordance with AWS A5 series specifications (Reference 3F-8).

3F.6.6 Anchor Bolts

Anchor bolts used for conduit supports, seismic category I and II, are expansion anchors qualified in accordance with ACI 355.2 (Reference 3F-9). The flexibility of base plates was considered in determining the anchor bolt loads.

3F.6.7 Bolts

Bolts used in conduit support, seismic category I and II; conform to American Society for Testing and Materials (ASTM) A-307 (Reference 3F-10).

3F.7 References

3F-1 American Standard for Electrical Rigid Steel Conduit (ERSC). ANSI C80.1-2005, American National Standard Institute, 2005.

3F-2 American Standard for Electrical Rigid Aluminum Conduit (EARC). ANSI C80.5-2005, American National Standard Institute, 2005.

3F-3 NEMA Standards Publication 250-2003 Enclosures for Electrical Equipment (1000 Volts Maximum). National Electrical Manufacturer Association, 2003.

3F-4 National Electric Code (NEC). NFPA 70, National Fire Protection Association, 1999.

3F-5 Specification for the Design of Cold-Formed Steel Members, Part 1 and 2. 1996 Edition and 2000 Supplement, American Iron and Steel Institute.

3F-6 Specification for the Design, Fabrication, and Erection of Steel Safety Related Structures for Nuclear Facilities. AISC-N690-1994, American Institute of Steel Construction, 1994.

3F-7 Structural Welding Code. AWS D1.1-2000, American Welding Society, 2000.

3F-8 A5 Filler Metal Specifications plus the Filler Metal Procurement Guidelines. AWS A5 Series, 1998-2007, American Welding Society.

3F-9 Qualification of Post-Installed Mechanical Anchors in Concrete. ACI 355.2, American Concrete Institute, 2004.

3F-10 Standard Specification for Carbon Steel Bolts and Studs, 60 000 PSI Tensile Strength. ASTM A-307-07, American Society for Testing and Materials International, 2007.

APPENDIX 3G

SEISMIC QUALIFICATION OF CABLE TRAYS AND SUPPORTS

CONTENTS

Page

3G Seismic Qualification of Cable Trays and Supports

3G.1 Description 3G-1

3G.1.1 Seismic Category I Cable Tray Systems 3G-1

3G.1.2 Seismic Category II Cable Tray Systems 3G-1

3G.2 Applicable Codes, Standards and Specifications 3G-2

3G.3 Loads and Load Combinations 3G-2

3G.3.1 Loads 3G-2

3G.3.2 Load Combinations 3G-2

3G.4 Design and Analysis Procedures 3G-2

3G.4.1 Equivalent Static Analysis 3G-2

3G.4.2 Modal Response Spectrum Analysis 3G-3

3G.5 Structural Acceptance Criteria 3G-3

3G.5.1 Allowable Stresses 3G-3

3G.5.2 Deflection Limitations 3G-3

3G.6 Materials 3G-3

3G.6.1 Cable Tray 3G-3

3G.6.2 Cold Formed Steel Shapes 3G-3

3G.6.3 Structural Steel Shapes 3G-3

3G.7 References 3G-4

ACRONYMS AND ABBREVIATIONS

AISC	American Institute of Steel Construction
AISI	American Iron and Steel Institute
CSDRS	certified seismic design response spectra
FIRS	foundation input response spectra
GMRS	ground motion response spectra
NEC	National Electric Code
NEMA	National Electrical Manufacturer Association
SSC	structure, system, and component
SSE	safe-shutdown earthquake

3G Seismic Qualification of Cable Trays and Supports

3G.1 Description

This appendix provides the methodology used to qualify the structural integrity of seismic category I and seismic category II electrical cable trays and cable tray supports (hereafter referred to as “cable tray systems”). Cable tray systems containing non-Class 1E cable in non-seismic structures are not required to be qualified to the requirements of this appendix.

In general, the design of cable trays and cable tray supports is accomplished through the following steps:

- Determine applicable load combinations and corresponding allowable stresses for trays and supports
- Limit spacing of tray supports to maintain tray stresses within allowable stresses corresponding to the applicable load combination
- Assure that the maximum stresses of tray supports are within allowable stresses corresponding to the applicable load combination
- Provide system bracing to control seismic movement and interaction with other seismic category I structures, systems, or components (SSCs).

3G.1.1 Seismic Category I Cable Tray Systems

Seismic category I cable tray systems are designed for all applicable load combinations to maintain structural integrity within stress limits. This is achieved by analyzing the cable tray system (tray, fittings, connectors, fasteners, supports, etc.) and limiting the support spacing to maintain critical stresses to acceptably low levels. The seismic qualification of cable tray systems is to satisfy the safe-shutdown earthquake (SSE) requirements of the structure in which they are contained. Seismic category I cable tray systems, including support anchorages, in US-APWR standard plant seismic category I structures are analyzed and designed for a SSE which is equivalent to the in-structure response spectra developed from the certified seismic design response spectra (CSDRS). Site-specific seismic category I structures are analyzed and designed using as a minimum the site-specific SSE developed from the site-specific ground motion response spectra (GMRS) and foundation input response spectra (FIRS).

3G.1.2 Seismic Category II Cable Tray Systems

Seismic category II cable tray systems are designed to verify that the items will not fall or displace excessively where it could damage any seismic category I SSCs during, and after, a SSE. Seismic category II cable tray systems including support anchorages are, therefore, analyzed and designed for the applicable SSE, such as in-structure response spectra developed from the CSDRS within the standard plant Reactor Building and the East and West Power Source Buildings using the same methods and stress limits specified for seismic category I cable tray systems except structural steel in-plane stress limits are permitted to reach 1.0 F_y.

3G.2 Applicable Codes, Standards and Specifications

Cable trays are manufactured to satisfy the National Electrical Manufacturers Association (NEMA) Standard VE-1, Metal Cable Tray Systems (Reference 3G-1), and consist of thin gauge steel channel side rails on ladder-type or solid-bottom trays, with or without covers. The installation of the cable tray system conforms to the requirements of NEMA Standard VE 2, Cable Tray Installation Guidelines (Reference 3G-2), and National Electric Code (NEC), Article 392, Cable Trays (Reference 3G-3).

The American Iron and Steel Institute (AISI) Specification for the Design of Cold-Formed Steel Members (Reference 3G-4) provides the methodology for evaluating cold formed shapes, as applicable. Structural steel shapes used for supports are designed and constructed in accordance with the American Institute of Steel Construction (AISC) Specification for the Design, Fabrication, and Erection of Steel Safety Related Structures for Nuclear Facilities (Reference 3G-5).

3G.3 Loads and Load Combinations

3G.3.1 Loads

Cable tray systems are designed for dead, live, seismic, and thermal loads, as applicable. Design dead load includes the working load (weight) of cables permitted in the tray (also known as “raceway”). Construction live load is considered in addition to the maximum weight of cables and trays; however, it is not present during design seismic events. In addition, any accessory loads to the cable trays and supports are included in the qualification of the cable tray and cable tray supports.

3G.3.2 Load Combinations

Refer to Subsection 3.8.4.3 for various load combinations applicable to seismic category I, SSCs. When determining dynamic loading for wall mounted supports, envelope the response spectra curves for the floors immediately above and below the support location.

Seismic category II cable tray systems are qualified for the applicable SSE to assure that they do not damage any seismic category I SSCs by falling or displacing excessively under any seismic loads. Seismic category II cable tray systems are, therefore, qualified for maximum seismic load combinations, and associated allowable stresses as discussed in Subsection 3.8.4.3.

3G.4 Design and Analysis Procedures

Refer to Section 3.7 for seismic system analysis and qualification requirements of seismic category I and II SSCs and their supports.

3G.4.1 Equivalent Static Analysis

Using equivalent horizontal and vertical static forces applied at the center of gravity of the various masses, the cable tray system is conservatively modeled to develop standard tray spans and support designs. The seismic accelerations are taken as 1.5 times peak of the support attachment spectrum during this analysis except when technical justification is provided for a lower factor unique to certain configurations.

3G.4.2 Modal Response Spectrum Analysis

For more exact results, cable tray systems can be analyzed using the envelope broadened response spectra methods, considering uniform support motion, or the independent support motion method.

3G.5 Structural Acceptance Criteria

3G.5.1 Allowable Stresses

Allowable stress coefficients are applied in accordance with basic allowables of AISC or AISI. Refer to Subsection 3.8.4.5 for the combination of appropriate allowable stresses with the appropriate load combinations and material specifications.

3G.5.2 Deflection Limitations

No specific deflection limitations for seismic category I and II cable tray systems are applicable. These components are designed not to fall during a seismic event. However, displacements are limited to prevent potential adverse interactions with adjacent commodities. Refer to Subsection 3.7.2.8 for criteria relating to seismic interaction of structures or systems adjacent to seismic category I SSCs.

When cable trays cross between adjacent buildings, the potential for differential movements is accommodated through tray expansion connectors and/or the evaluation of induced stresses. Cable placement within trays also adequately allows for elongation. Differential displacements caused by seismic motion are obtained at the tray elevation using seismic analysis reports for each building.

3G.6 Materials

3G.6.1 Cable Tray

Cable trays, including connectors, fittings, and fasteners are manufactured in accordance with NEMA Standard VE-1 (Reference 3G-1).

3G.6.2 Cold Formed Steel Shapes

Cold formed steel shapes that may be used as support members satisfy the requirements specified in AISI, Specification for the Design of Cold-Formed Steel Members (Reference 3G-4).

3G.6.3 Structural Steel Shapes

The design, fabrication, and installation of structural steel supports, and structural shapes and plates used in support construction, comply with AISC-N690-1994, Specification for the Design, Fabrication, and Erection of Steel Safety Related Structures for Nuclear Facilities (Reference 3G-5).

3G.7 References

3G-1 Metal Cable Tray Systems. NEMA Standard VE-1, National Electrical Manufacturer Association, 1998.

3G-2 Cable Tray Installation Guidelines. NEMA VE-2, National Electrical Manufacturer Association, 2006.

3G-3 Cable Trays. NEC Article 392, National Electric Code, 2002.

3G-4 Specification for the Design of Cold-Formed Steel Members. 1996 Edition and Supplement No 1, American Iron and Steel Institute, July 1999.

3G-5 Specification for the Design, Fabrication and Erection of Steel Safety Related Structures for Nuclear Facilities. AISC-N690-1994, American Institute of Steel Construction, 1994.

APPENDIX 3H

MODEL PROPERTIES AND SEISMIC ANALYSIS RESULTS FOR LUMPED MASS STICK MODELS OF R/B-PCCV-CONTAINMENT INTERIOR STRUCTURES ON A COMMON BASEMAT, AND PS/Bs ON INDIVIDUAL BASEMATS

CONTENTS

Page

3H Model Properties and Seismic Analysis Results for Lumped Mass Stick Model of R/B-PCCV-Containment Internal Structure on a Common Basemat, and PS/Bs on Individual Basemats1

3H.1 Introduction 3H-1

3H.2 Model Properties 3H-1

3H.3 Seismic Analysis Results for Lumped Mass Stick Models 3H-3

3H.4 References 3H-4

TABLES

Page

Table 3H.2-1 Description of Mass Locations and Elevations with Respect to Node Points of R/B-PCCV-Containment Internal Structure Lumped Mass Stick Model ... 3H-5

Table 3H.2-2 Mass Properties of Stick Model (PCCV) ... 3H-6

Table 3H.2-3 Element Properties of Stick Model (PCCV) ... 3H-6

Table 3H.2-4 Mass Properties of Stick Model (Containment Internal Structure) ... 3H-7

Table 3H.2-5 Element Properties of Stick Model (Containment Internal Structure) ... 3H-7

Table 3H.2-6 Mass Properties of Stick Model (R/B) ... 3H-8

Table 3H.2-7 Element Properties of Stick Model (R/B) ... 3H-8

Table 3H.2-8 Mass Properties of Stick Model (Basemat) ... 3H-9

Table 3H.2-9 Element Properties of Stick Model (Basemat) ... 3H-9

Table 3H.2-10 Summation of Lumped Mass Stick Model Weights ... 3H-9

Table 3H.2-11 Mass Properties of Stick Model (PS/B) ... 3H-10

Table 3H.2-12 Element Properties of Stick Model (PS/B) ... 3H-10

Table 3H.2-13 Spring Properties for Internodal Spring Elements ... 3H-11

Table 3H.2-14 SSI Lumped Parameters (R/B, PCCV, and Containment Internal Structure) ... 3H-12

Table 3H.2-15 SSI Lumped Parameters (PS/B) ... 3H-13

Table 3H.3-1 Modal Properties of R/B Lumped Mass Stick Model (Fixed Base) ... 3H-15

Table 3H.3-2 Modal Properties of PCCV Lumped Mass Stick Model (Fixed Base) ... 3H-16

Table 3H.3-3 Modal Properties of Containment Internal Structure Lumped Mass Stick Model (Fixed Base) ... 3H-17

Table 3H.3-4 Modal Properties of R/B-PCCV-Containment Internal Structure SSI Model ... 3H-18

Table 3H.3-5 R/B-PCCV-Containment Internal Structure Lumped Mass Stick Model, Maximum Accelerations – Soil Subgrade (V_s = 1,000 ft/s) 3H-19

Table 3H.3-6 R/B-PCCV-Containment Internal Structure Lumped Mass Stick Model, Maximum Accelerations – Rock Subgrade (Vs = 3,500 ft/s) 3H-20

Table 3H.3-7 R/B-PCCV-Containment Internal Structure Lumped Mass Stick Model, Maximum Accelerations – Rock Subgrade (V_s = 6,500 ft/s) 3H-21

Table 3H.3-8 R/B-PCCV-Containment Internal Structure Lumped Mass Stick Model, Maximum Accelerations – Hard Rock Subgrade (Vs = 8,000 ft/s) 3H-22

Table 3H.3-9 R/B-PCCV-Containment Internal Structure Lumped Mass Stick Model Design Forces 3H-23

Table 3H.3-10 Lumped Mass Stick Model Design Shear Forces and Moments ... 3H-24

Table 3H.3-11 Maximum Displacements – Soil Subgrade (V_s = 1,000 ft/s) 3H-25

Table 3H.3-12 Maximum Displacements – Rock Subgrade (V_s = 3,500 ft/s) 3H-26

Table 3H.3-13 Maximum Displacements – Rock Subgrade (V_s = 6,500 ft/s) 3H-27

Table 3H.3-14 Maximum Displacements – Hard Rock Subgrade (V_s = 8,000 ft/s) 3H-28

FIGURES

Page

Figure 3H.2-1 Lumped Mass Stick Model for 3H-29 R/B-PCCV-Containment Internal Structure 3H-29

Figure 3H.2-2 Elevation Views of Lumped Mass Stick Model 3H-32

Figure 3H.2-3 Lumped Mass Stick Model for PS/B 3H-36

Figure 3H.2-4 Elevation Views of PS/Bs Lumped Mass Stick Model 3H-37

Figure 3H.3-1 Comparison of Static Deformation 3H-38 for R/B Three Dimensional Stick and FE Models 3H-38

Figure 3H.3-3 Comparison of Static Deformation for Containment Internal Structure Three Dimensional Stick and FE Models 3H-41

Figure 3H.3-4 Comparison of ISRS for Containment Internal Structure Three Dimensional Stick and FE Models 3H-42

ACRONYMS AND ABBREVIATIONS

ASCE	American Society of Civil Engineers
FE	finite element
ISRS	in-structure response spectra
PCCV	prestressed concrete containment vessel
R/B	reactor building
RCL	reactor coolant loop
SSI	soil-structure interaction
SRSS	square root sum of the squares

3H Model Properties and Seismic Analysis Results for Lumped Mass Stick Model of R/B-PCCV-Containment Internal Structure on a Common Basemat, and PS/Bs on Individual Basemats

3H.1 Introduction

This Appendix discusses the properties of the reactor building (R/B), prestressed concrete containment vessel (PCCV), and containment internal structure lumped mass stick models used for the seismic analysis. This Appendix also discusses the properties of the east and west power source buildings (PS/Bs) lumped mass stick model used for the seismic analysis.

This Appendix presents the results of the seismic analyses performed on the lumped mass stick models, but does not address seismic analysis methods, procedures used for analytical modeling, soil-structure interaction (SSI) analysis methods, development of in-structure response spectra (ISRS), components of earthquake motion, combination of modal responses, interaction of non-seismic Category I structures with seismic Category I structures, effects of parameter variations on ISRS, use of constant vertical static factors, methods used to account for torsional effects, comparison of responses (time history versus response spectra analysis results), methods of seismic analysis of dams, determination of dynamic stability of seismic Category I structures, or analysis procedures for damping. Those topics are addressed in Subsection 3.7.2.

The results presented in this Appendix are obtained from the seismic analyses through direct integration time history method performed on a combined model of the US-APWR R/B, PCCV, and containment internal structure resting on their common basemat, which is not coupled with the lumped mass stick model for the reactor coolant loops (RCLs). As explained in Subsection 3.7.2.3, this un-coupled model is used for seismic and structural design of the R/B, PCCV, containment internal structure, and their common basemat; however, the results obtained from the seismic analyses presented herein are reconciled with the results of the seismic analyses performed on the US-APWR RCL-R/B-PCCV-containment internal structure coupled model. The coupled model and any changes required by the reconciliation are addressed in a separate Technical Report (Reference 3H-1).

3H.2 Model Properties

Lumped mass stick models of the R/B, PCCV, and containment internal structure are developed to obtain the seismic response of these structures. The lumped mass stick model for each of these structures is included in a combined model, which represents the R/B-PCCV-containment internal structure resting on their common basemat, as shown in Figure 3H.2-1. Frequency independent SSI lumped parameters representing the stiffness and damping properties of the interaction of the basemat with the underlying subgrade are added at the base of the combined model to simulate a range of different subgrade conditions.

Figure 3H.2-2 provides elevation views of the R/B, PCCV, and containment internal structure of the overall stick model in the global XZ and YZ planes used for the model. The overall modeling approach and procedures for this lumped mass stick model are discussed in Subsection 3.7.2.3. Node points at the end of rigid outriggers (not shown in Figure 3H.2-1) are also included where appropriate at each floor level in the stick model

in order to capture accelerations at the edges/corners of the structures. These response results obtained at the outrigger locations are used to develop ISRS. Comparison of the ISRS obtained from the combined lumped mass stick model versus the detailed finite element (FE) model for static analysis of the R/B-PCCV-containment internal structure are discussed further in Section 3H.3 of this Appendix.

Table 3H.2-1 provides a physical description of the mass locations for the overall R/B, PCCV, and containment internal structure model, including the node point elevations.

Mass properties including the associated weight, vertical and horizontal location of the center of gravity, and weight moment of inertia for each node of the PCCV portion of the model are provided in Table 3H.2-2. Table 3H.2-3 presents the PCCV element properties of the stick model elements including the moments of inertia about the global X, Y and Z axes, the shear area, shear area centroid, axial area, and axial area centroid for each stick element. The PCCV shell is a structure with uniform geometry and mass distribution, and the analyzed center of mass at each node point and element corresponds with the center of shear and axial rigidity.

Mass properties and element properties of the R/B-PCCV-containment internal structure model elements are provided for the containment internal structure portion of the model in Tables 3H.2-4 and 3H.2-5, mass properties and element properties of the model elements are provided for the R/B portion of the model in Tables 3H.2-6 and 3H.2-7, and mass properties and element properties of the model elements are provided for the common basemat portion of the model in Tables 3H.2-8 and 3H.2-9.

Table 3H.2-10 provides a summation of the weights of the PCCV, R/B, containment internal structure, and basemat portions of the lumped mass stick model.

The lumped mass stick model of the PS/B as shown in Figure 3H.2-3 is use to obtain the seismic response. Figure 3H.2-4 provides elevation views of the PS/B lumped mass stick model in the NS and EW planes. The overall modeling approach and procedures for this lumped mass stick model are discussed in Subsection 3.7.2.3.

Mass properties and element properties of the PS/B model elements are provided in Tables 3H.2-11 and 3H.2-12, respectively.

Table 3H.2-13 presents the properties of the internodal spring elements that are shown in the combined R/B-PCCV-containment internal structure lumped mass stick model in Figure 3H.2-1. The RE42-RE04 and RE41-RE04 springs are modeled as infinitely stiff in order to represent the rigid diaphragm connection between the portions of the R/B roof. The IC07-JC05 spring represents the stiffness of the upper portion of the containment internal structure pressurizer house (located above the operating deck at Elevation 76 ft, 5 in. with respect to the lower portion of the containment internal structure.

Table 3H.2-14 presents the combined R/B-PCCV-containment internal structure SSI lumped parameter coefficients, soil springs representing the SSI stiffness and damping coefficients representing the dissipation of energy in the SSI system. The SSI lumped parameter coefficients are computed for each of the three flexible generic subgrade conditions using the formulas and general approaches given in American Society of Civil Engineers (ASCE) 4 (Reference 3H-2), discussed in further detail in Subsection 3.7.2.4. The SSI stiffness constants and damping coefficients shown in Table 3H.2-14 are

applied at node BB01 representing the bottom center of the basemat, as shown in Figure 3H.2-1. Table 3H.2-15 presents the SSI lumped parameter for the PS/Bs.

3H.3 Seismic Analysis Results for Lumped Mass Stick Models

The natural frequencies and descriptions of the associated modal responses of the fixed-base models are presented in Tables 3H.3-1, 3H.3-2, and 3H.3-3 for the individual R/B, PCCV, and containment internal structure, respectively. Table 3H.3-4 presents the natural frequencies and major modes, including modal participation factors, obtained from the modal analyses of the combined R/B-PCCV-containment internal structure lumped mass stick model with three different SSI lumped parameters (corresponding to the generic soil and rock subgrade conditions with shear wave velocity V_s = 1,000 ft/s, 3,500 ft/s, 6,500 ft/s, and 8,000 ft/s as described in Subsection 3.7.2.4). Those are shown as references because direct integration method is used to do the response analysis.

The maximum absolute nodal accelerations (Zero Period Acceleration values) obtained from the direct integration time history analyses of the R/B-PCCV-containment internal structure lumped mass stick model, as described in Subsection 3.7.2, are presented in Tables 3H.3-5, 3H.3-6, 3H.3-7, and 3H.3-8 for the four generic subgrade conditions with V_s = 1,000 ft/s, 3,500 ft/s, 6,500 ft/s, and 8,000 ft/s, respectively. The tables present the maximum absolute nodal accelerations obtained for each of the three global orthogonal directions of the earthquake input motion as well as the combined maximum absolute nodal accelerations. The accelerations obtained for the earthquake components in the three global orthogonal directions are combined in accordance with RG 1.92 (Reference 3H-3) using the square root sum of the squares (SRSS) method, and presented in Tables 3H.3-5 through 3H.3-8.

The design floor forces presented in Table 3H.3-9 are obtained from the results of the time history analyses by using the methodology described in Subsection 3.7.2. The presented values of the design floor forces represent the envelope of the results for all subgrade conditions. After being corrected to include the effects of the accidental torsion, the design floor shear forces are applied as static loads to the detailed FE model of R/B, PCCV, and containment internal structure in two horizontal directions. The axial forces are applied to detailed FE model in vertical direction. During the structural design of the R/B, PCCV, and containment internal structure members and components, the design seismic forces due to three different components of the earthquake are combined using the SRSS or Newmark 100%-40%-40% method.

Figure 3H.3-1 presents the comparison between deformation results obtained from the static analyses of the R/B from the lumped mass stick model versus those obtained from the static analyses of the detailed FE model. The comparison demonstrates the correlation of the stiffness properties of the two models.

Figure 3H.3-2 presents the comparison between the 5% ISRS at various elevations and locations obtained from the direct integration time history analysis of the fixed-base R/B lumped mass stick model, versus those obtained from the frequency domain time history analysis of the fixed-base detailed FE model. The comparison shows the correlation of the dynamic responses obtained from the two models. Note that detailed investigation of out-of-plane flexibility of floor slabs with respect to development of design ISRS is addressed in a Technical Report (Reference 3H-4) as addressed in Subsection 3.7.2.5.

Figure 3H.3-3 presents the comparison between results obtained for the containment internal structure from the lumped mass stick model versus those obtained from the detailed FE model with respect to static deformations. The comparison shows the correlation of the stiffness properties of the two models.

Figure 3H.3-4 presents the comparison between the 5% damping ISRS obtained for the containment internal structure at various locations and elevations from the fixed-base lumped mass stick model, versus those obtained from the fixed-base FE model. The comparison shows the correlation of the dynamic responses obtained from the two models.

Table 3H.3-10 presents the results of the PS/B time history analyses by using the methodology described in Subsection 3.7.2.

Tables 3H.3-11 through 3H.3-14 provide resulting maximum displacement at various mass nodes for shear wave velocities.

3H.4 REFERENCES

3H-1 Dynamic Analysis of the Coupled RCL-R/B-PCCV-Containment Internal Structure Lumped Mass Stick Model, MHI Technical Report, Later.

3H-2 Seismic Analysis of Safety-Related Nuclear Structures. American Society of Civil Engineers, ASCE 4-98, Reston, Virginia, 2000.

3H-3 Combining Responses and Spatial Components in Seismic Response Analysis. Regulatory Guide 1.92, Rev. 2, U.S. Nuclear Regulatory Commission, Washington, DC, July 2006.

3H-4 Investigation of Out-of-Plane Flexibility of Floor Slabs with Respect to Development of ISRS, MHI Technical Report, Later.

Table 3H.2-1 Description of Mass Locations and Elevations with Respect to Node Points of R/B-PCCV-Containment Internal Structure Lumped Mass Stick Model

Building	Mass (Jint)	Elevation	Description
PCCV	CV11	EL 230'- 2”	Wall center at the top of dome
	CV10	EL 225'- 0”	7 feets under the top of dome
	CV09	EL 201'- 8”	Angle of elevation 40 degrees for dome (inside)
	CV08	EL 173'- 1”	Angle of elevation 15 degrees for dome (inside)
	CV07	EL 145'- 7”	The top of polar crane rail
	CV06	EL 115'- 6”	The roof level of MS/FW room
	CV05	EL 92'- 2”	MS penetration
	CV04	EL 76'- 5”	The operation floor level
	CV03	EL 68'- 3”	FW penetration
	CV02	EL 50'- 2”	R/B 3rd floor level
	CV01	EL 25'- 3”	R/B 2nd floor level
	CV00	EL 1'-11”	The upper level of basemat in PCCV
Containment Internal Structure	IC09	EL 139'- 6”	The upper level of P/R room
	IC08	EL 112'- 4”	The point wall thickness changes in P/R room
	IC18	EL 110'- 9”	P/R support level
	IC07	EL 76'- 5”	The operation floor level in P/R room
	IC61	EL 96'- 7”	The upper level of SG wall
	IC62	EL 96'- 7”	The upper level of SG wall
	IC05	EL 76'- 5”	The operation floor level
	IC15	EL 59'- 2”	SG support level
	IC04	EL 50'- 2”	R/B 3rd floor level
	IC14	EL 45'- 8”	SG support level
	IC03	EL 35'-7.25”	Reactor vessel support level
	IC02	EL 25'- 3”	R/B 2nd floor level
	IC01	EL 16'- 0”	Pressure header room floor level
	(IC00)	EL 1'-11”	The upper level of basemat in PCCV
R/B	FH08	EL 154'- 6”	The FH area roof level
	FH07	EL 125'- 8”	The top level of FH area crane rail
	FH06	EL 101'- 0”	The roof level of center building
	RE05	EL 115'- 6”	The roof level of MS/FW room
	RE04	EL 101'- 0”	R/B 5th floor level (MS/FW room)
	RE41	EL 101'- 0”	R/B 5th roof level (west side)
	RE42	EL 101'- 0”	R/B 5th roof level (east side)
	RE03	EL 76'- 5”	R/B 4th floor level (operation floor)
	RE02	EL 50'- 2”	R/B 3rd floor level
	RE01	EL 25'- 3”	R/B 2nd floor level
	RE00	EL 3'- 7”	The upper level of basemat
Basemat	BS01	EL -25'- 0.5”	The mass level of basemat
	BB01	EL -36'- 3”	The lower level of basemat

Table 3H.2-2 Mass Properties of Stick Model (PCCV)

Mass Name	Elevation (in)	Weight W ($\times 10^6$lb)	Weight Moment of Inertia ($\times 10^{12}$lb·in^2)			Mass Center (in)	
			J_{yy} NS	J_{xx} EW	J_{zz} Torsional	X_g NS	Y_g EW
CV11	2,762	0.810	0.00685	0.00685	0.0133	0.00	0.00
CV10	2,700	3.88	0.393	0.393	0.766	0.00	0.00
CV09	2,420	7.22	1.94	1.94	3.76	0.00	0.00
CV08	2,077	8.11	3.23	3.23	6.30	0.00	0.00
CV07	1,747	11.6	4.97	4.97	9.82	0.00	0.00
CV06	1,386	8.74	3.79	3.79	7.42	0.00	0.00
CV05	1,106	7.30	3.13	3.13	6.20	0.00	0.00
CV04	917	4.50	1.92	1.92	3.82	0.00	0.00
CV03	819	4.28	1.82	1.82	3.63	0.00	0.00
CV02	602	7.02	3.02	3.02	5.96	0.00	0.00
CV01	303	7.94	3.43	3.43	6.74	0.00	0.00

Subtotal : 71.40×10^6 (lb)

Table 3H.2-3 Element Properties of Stick Model (PCCV)

Element Name	Torsional Const. I_{zz} ($\times 10^{11}$in^4)	Shear Area ($\times 10^5$in^2)		Moment of Inertia ($\times 10^{11}$in^4)		Shear Center (in)		Axial Area A_a ($\times 10^5$in^2)	Centroid (in)	
		A_x NS	A_y EW	I_{yy} NS	I_{xx} EW	X_s NS	Y_s EW		X_c NS	Y_c EW
CV11	0.0378	0.771	0.771	0.0189	0.0189	0.00	0.00	0.0147	0.0	0.0
CV10	0.508	1.27	1.27	0.254	0.254	0.00	0.00	0.168	0.0	0.0
CV09	1.34	1.27	1.27	0.670	0.670	0.00	0.00	0.814	0.0	0.0
CV08	1.99	1.27	1.27	0.996	0.996	0.00	0.00	3.27	0.0	0.0
CV07	2.55	1.50	1.50	1.28	1.28	0.00	0.00	3.01	0.0	0.0
CV06	2.55	1.50	1.50	1.28	1.28	0.00	0.00	3.01	0.0	0.0
CV05	2.55	1.50	1.50	1.28	1.28	0.00	0.00	3.01	0.0	0.0
CV04	2.55	1.50	1.50	1.28	1.28	0.00	0.00	3.01	0.0	0.0
CV03	2.55	1.50	1.50	1.28	1.28	0.00	0.00	3.01	0.0	0.0
CV02	2.55	1.50	1.50	1.28	1.28	0.00	0.00	3.01	0.0	0.0
CV01	2.55	1.50	1.50	1.28	1.28	0.00	0.00	3.01	0.0	0.0

Table 3H.2-4 Mass Properties of Stick Model (Containment Internal Structure)

Mass Name	Elevation (in)	Weight* ($\times 10^6$lb)		Weight Moment of Inertia ($\times 10^{12}$lb·in^2)			Mass Center (in)	
		W_h	W_v	J_{yy} NS	J_{xx} EW	J_{zz} Torsional	X_g NS	Y_g EW
IC09	1,674	0.679	0.679	0.00413	0.00752	0.0108	472.5	-0.4
IC08	1,348	1.91	1.91	0.0199	0.0294	0.0304	476.2	0.3
IC18	1,329	0.342	0.011	0.00192	0.00362	0.00543	476.2	0.3
IC07	917	1.09	1.09	0.00769	0.0131	0.0173	436.4	0.6
IC61	1,159	3.40	2.29	0.117	0.0391	0.152	48.9	-444.5
IC62	1,159	3.55	2.45	0.122	0.0411	0.159	48.8	443.1
IC05	917	17.30	15.20	2.15	2.15	4.25	34.0	6.9
IC15	710	0.485	0.573	0.0556	0.0556	0.111	34.0	6.9
IC04	602	15.10	15.10	1.75	1.75	3.47	0.0	-29.8
IC14	548	2.89	0.220	0.331	0.331	0.662	0.0	-29.8
IC03	427.25	12.10	12.50	1.19	1.19	2.34	-6.4	1.0
IC02	303	17.20	24.10	3.27	3.27	6.53	-2.9	2.0
IC01	192	18.40	18.40	3.51	3.51	7.00	12.4	0.6

Sub total : 94.50×10^6 (lb)

*: W_h is used for horizontal analyses, and W_v is used for vertical analyses

Table 3H.2-5 Element Properties of Stick Model (Containment Internal Structure)

Element Name	Torsional Const. I_{zz} ($\times 10^{11}$in^4)	Shear Area ($\times 10^5$in^2)		Moment of Inertia ($\times 10^{11}$in^4)		Shear Center (in)		Axial Area A_a ($\times 10^5$in^2)	Centroid (in)	
		A_x NS	A_y EW	I_{yy} NS	I_{xx} EW	X_s NS	Y_s EW		X_c NS	Y_c EW
IC09	0.00698	0.119	0.206	0.00543	0.00675	501.8	0.0	0.415	471.2	0.0
IC08	0.00752	0.137	0.221	0.00525	0.00851	501.0	0.0	0.569	470.9	0.0
IC18	0.00752	0.137	0.221	0.00525	0.00851	501.0	0.0	0.569	470.9	0.0
IC07	-	-	-	-	-	-	-	-	-	-
IC61	0.0361	0.486	0.253	0.0348	0.00882	40.0	-438.3	1.11	39.7	-484.7
IC62	0.0361	0.486	0.253	0.0348	0.00882	40.0	438.3	1.11	39.7	484.7
IC05	0.731	2.20	1.43	0.345	0.271	-15.6	-2.7	4.31	-7.3	-0.5
IC15	0.731	2.20	1.43	0.345	0.271	-15.6	-2.7	4.31	-7.3	-0.5
IC04	0.720	2.07	1.52	0.354	0.286	-17.8	-2.9	4.22	0.5	-5.2
IC14	0.720	2.07	1.52	0.354	0.286	-17.8	-2.9	4.22	0.5	-5.2
IC03	0.646	2.73	2.57	0.412	0.257	-19.1	-0.8	5.51	7.8	-4.7
IC02	1.710	7.57	7.21	0.703	0.367	-15.4	0.0	11.4	-28.5	-2.1
IC01	1.830	12.30	12.00	0.732	0.729	-10.4	0.0	14.9	-44.1	-0.9

Table 3H.2-6 Mass Properties of Stick Model (R/B)

Mass Name	Elevation (in)	Weight W ($\times 10^6$lb)	Weight Moment of Inertia ($\times 10^{12}$lb·in^2)			Mass Center (in)	
			J_{yy} NS	J_{xx} EW	J_{zz} Torsional	X_g NS	Y_g EW
FH08	1,854	6.08	0.294	2.32	2.61	-1398.7	209.3
FH07	1,508	4.52	0.218	1.72	1.94	-1418.9	222.2
FH06	1,212	4.21	0.203	1.60	1.80	-1429.0	214.0
RE41	1,212	8.30	5.88	0.171	6.05	-292.9	-932.9
RE42	1,212	6.89	2.92	0.153	3.07	91.8	934.0
RE05	1,386	15.1	0.993	7.98	8.96	1347.5	75.1
RE04	1,212	15.6	1.03	8.26	9.27	1394.8	-14.4
RE03	917	64.3	73.7	34.1	108	229.7	20.3
RE02	602	72.8	83.5	38.6	122	106.8	-3.9
RE01	303	65.4	75.1	34.7	110	77.5	-14.3

Subtotal: 263.2×10^6 (lb)

Table 3H.2-7 Element Properties of Stick Model (R/B)

Element Name	Torsional Const. I_{zz} ($\times 10^{11}$in^4)	Shear Area ($\times 10^5$in^2)		Moment of Inertia ($\times 10^{11}$in^4)		Shear Center (in)		Axial Area A_a ($\times 10^5$in^2	Centroid (in)	
		A_x NS	A_y EW	I_{yy} NS	I_{xx} EW	X_s NS	Y_s EW		X_c NS	Y_c EW
FH08	0.450	0.365	0.898	0.0176	0.342	-1437.5	261.0	1.51	-1440.9	232.7
FH07	0.692	0.608	0.891	0.0293	0.332	-1439.9	261.0	1.78	-1442.9	187.1
FH06	0.682	0.608	0.802	0.0293	0.259	-1474.5	261.0	1.68	-1454.8	217.6
RE41	0.622	1.24	0.496	0.605	0.00832	-406.7	-1189.3	2.06	-361.2	-1111.8
RE42	0.106	0.858	0.590	0.177	0.00979	649.6	1178.5	1.65	346.1	1041.4
RE05	1.70	1.98	1.61	0.160	0.596	1685.4	42.4	3.78	1557.1	28.4
RE04	1.79	1.96	2.12	0.146	0.621	1532.4	-31.2	4.17	1520.2	-13.7
RE03	20.9	6.95	6.92	4.54	2.88	-249.7	-57.7	13.3	-81.8	-33.4
RE02	22.3	7.51	7.66	4.76	2.84	-173.2	-66.3	14.5	-39.6	-49.5
RE01	23.3	8.31	8.24	4.51	2.92	-102.0	-44.4	15.7	-36.2	-41.7

Table 3H.2-8 Mass Properties of Stick Model (Basemat)

Mass Name	Elevation (in)	Weight W (×106lb)	Weight Moment of Inertia (×1012lb·in2)			Mass Center (in)	
			Jyy NS	Jxx EW	Jzz Torsional	Xg NS	Yg EW
CV00	23	3.80	1.62	1.62	3.23	0.0	0.0
RE00	43	122	140	65.2	205	34.3	-11.0
IC00	23	21.7	4.13	4.13	8.22	12.4	0.6
BS01	-300.5	158	182	84.6	264	60.0	-10.6
BB01*	-435	-	-	-	-	0.0	0.0

Subtotal: 305.5×10^6 (lb)

*: BB01 is a subordinate point of BS01.

Table 3H.2-9 Element Properties of Stick Model (Basemat)

Element Name	Torsional Const. Izz (×1011in4)	Shear Area (×105in2)		Moment of Inertia (×1011in4)		Shear Center (in)		Axial Area Aa (×105in2)	Centroid (in)	
		Ax NS	Ay EW	Iyy NS	Ixx EW	Xs NS	Ys EW		Xc NS	Yc EW
RE00	39.9	24.6	23.1	14.6	12.3	38.6	-22.8	46.6	36.0	-1

Note: CV00, RE00, and IC00 are linked by rigid beam elements.

Table 3H.2-10 Summation of Lumped Mass Stick Model Weights

Mass Name	Weight (×106lb) *W*
PCCV	71.4
R/B	263.2
Containment Internal Structure	94.5
Basemat	305.5
Total	734.6

Table 3H.2-11 Mass Properties of Stick Model (PS/B)

Mass Name	Elevation (in)	Weight (×106lb) W	Weight Moment of Inertia (×1012lb·in2)			Mass Center (in)	
			Jyy NS	Jxx EW	Jzz Torsional	xg NS	yg EW
PSB2	474.0	7.89	0.458	1.25	1.70	393.9	707.9
PSB1	43.0	11.4	0.668	1.82	2.46	396.9	656.6
BSTP*	-316.0	—	—	—	—	398.5	645.0
BASE	-366.0	15.0	0.894	2.41	3.25	398.5	645.0
BSBM*	-416.0	—	—	—	—	398.5	645.0

Subtotal : 34.29×10^{6} (lb)

Note * = BSTP and BSBM are subordinate points of BASE.

Table 3H.2-12 Element Properties of Stick Model (PS/B)

Element Name	Torsional Const. (×1011in4) Izz	Shear Area (×105in2)		Moment of Inertia (×1011in4)		Shear Center (in)		Axial Area (×105in2) Aa	Centroid (in)	
		Ax NS	Ay EW	Iyy NS	Ixx EW	Xs NS	Ys EW		xc NS	yc EW
PSB2	0.298	0.559	0.577	0.0622	0.207	397.0	691.1	1.14	404.0	705.0
PSB1	0.414	0.952	0.942	0.0898	0.274	396.0	659.3	1.82	394.0	648.0

Table 3H.2-13 Spring Properties for Internodal Spring Elements

	Location	Sort		Spring Value	Damping Value
Containment Internal Structure	Area at lower pressurizer support IC07-JC05 (2)	NS	Horizontal	infinity	h=5%
			Rotational	6.75×10^{12} lb·in/rad	
		EW	Horizontal	infinity	
			Rotational	1.09×10^{13} lb·in/rad	
		Vertical		infinity	
		Torsion		infinity	
R/B	Roof area 1 (1) (RE42-RE04)	NS	Horizontal	infinity	h=7%
		EW	Horizontal	infinity	
	Roof area 2 (1) (RE41-RE04)	NS	Horizontal	infinity	
		EW	Horizontal	infinity	

Notes:

1. RE41, RE42, and RE04 are linked by rigid translational springs. No link elements are set between RE41, RE 42 and FH06. See Figure 3H.2-1 for the overall configuration of the R/B-PCCV-Containment Internal Structure lumped mass stick model.

2. JC05 is a subordinate point of IC05 and located at the same coordinate as IC07. JC05 and IC07 are connected by internodal spring elements shown in the above table.

Table 3H.2-14 SSI Lumped Parameters (R/B, PCCV, and Containment Internal Structure)

(Horizontal)

Direction		Horizontal		Rotational	
		Spring Constant ($\times 10^8$ lb/in)	Damping Coefficient ($\times 10^7$ lb s/in)	Spring Constant ($\times 10^{14}$ lb in/rad)	Damping Coefficient ($\times 10^{13}$ lb in s/rad)
NS K_x : Horizontal K_{yy}: Rotational	Soft	1.89	0.948	7.83	3.81
	Medium 1	26.4	3.78	105.	12.3
	Medium 2	98.2	7.56	389.	24.9
	Hard Rock	Fixed Base Assumption *			
EW K_y : Horizontal K_{xx}: Rotational	Soft	2.05	1.02	4.57	1.68
	Medium 1	28.6	4.09	61.0	6.46
	Medium 2	106.	8.16	227.	13.0
	Hard Rock	Fixed Base Assumption *			

(Vertical)

Direction		Spring Constant ($\times 10^8$ lb/in)	Damping Coefficient ($\times 10^7$ lb s/in)
UD K_z	Soft	2.62	3.23
	Medium 1	35.0	12.3
	Medium 2	130.	24.6
	Hard Rock	Fixed Base Assumption *	

(Torsional)

Direction		Spring Constant ($\times 10^{14}$ lb in/rad)	Damping Coefficient ($\times 10^{13}$ lb in s/rad)
Torsional K_{zz}	Soft	7.24	1.54
	Medium 1	105.	6.54
	Medium 2	389.	13.2
	Hard Rock	Fixed Base Assumption *	

* The points located at the upper level of the basemat (RE00, IC00, CV00) are considered as the fixed end points when a fixed base assumption is adopted.

Table 3H.2-15 SSI Lumped Parameters (PS/B)

(Horizontal)

Direction		Horizontal		Rotational	
		Spring Constant ($\times 10^8$lb/in)	Damping Coefficient ($\times 10^7$lb s/in)	Spring Constant ($\times 10^{14}$lb in/rad)	Damping Coefficient ($\times 10^{13}$lb in s/rad)
NS K_x :Horizontal K_{yy}Rotational	Soft	0.712	0.120	0.162	0.0201
	Medium 1	9.94	0.480	2.17	0.0773
	Medium 2	36.9	0.960	8.06	0.155
	Hard Rock	Fixed Base Assumption *			
EW K_y :Horizontal K_{xx}:Rotational	Soft	0.655	0.108	0.356	0.0499
	Medium 1	9.14	0.450	4.76	0.194
	Medium 2	34.0	0.900	17.7	0.392
	Hard Rock	Fixed Base Assumption *			

(Vertical)

Direction		Spring Constant ($\times 10^8$lb/in)	Damping Coefficient ($\times 10^7$lb s/in)
UD K_z	Soft	0.928	0.397
	Medium 1	12.4	1.52
	Medium 2	46.1	3.03
	Hard Rock	Fixed Base Assumption *	

(Torsional)

Direction		Spring Constant ($\times 10^{14}$lb in/rad)	Damping Coefficient ($\times 10^{13}$lb in s/rad)
Torsional K_{zz}	Soft	0.317	0.0233
	Medium 1	4.59	0.0994
	Medium 2	17.0	0.201
	Hard Rock	Fixed Base Assumption *	

* The points located at the top of the basemat (BSTP) is considered as the fixed end point when a fixed base assumption is adopted.

Table 3H.3-1 Modal Properties of R/B Lumped Mass Stick Model (Fixed Base) (Sheet 1 of 2)

Mode		Comment
Freq. (Hz)	Period (sec)	
5.29	0.189	Response in NS direction
6.34	0.158	Response in EW direction
7.40	0.135	Response in NS direction
9.22	0.108	Response in EW direction
10.48	0.095	Response in NS,UD direction
12.03	0.083	
13.13	0.076	Response in EW direction
13.39	0.075	
15.46	0.065	
16.70	0.060	
16.94	0.059	Response in UD direction
17.69	0.057	
18.17	0.055	
19.14	0.052	
20.43	0.049	
20.54	0.049	
21.46	0.047	
23.16	0.043	
23.92	0.042	
25.48	0.039	
25.92	0.039	
27.33	0.037	
27.75	0.036	
29.48	0.034	
30.75	0.033	
33.21	0.030	
33.37	0.030	
34.94	0.029	
36.54	0.027	
37.34	0.027	
38.79	0.026	
39.26	0.025	
41.52	0.024	

Table 3H.3-1 Modal Properties of R/B Lumped Mass Stick Model (Fixed Base) (Sheet 2 of 2)

Mode		Comment
Freq. (Hz)	Period (sec)	
42.19	0.024	
42.46	0.024	
43.38	0.023	
45.73	0.022	
46.10	0.022	
47.91	0.021	

Table 3H.3-2 Modal Properties of PCCV Lumped Mass Stick Model (Fixed Base)

Mode		Comment
Freq. (Hz)	Period (sec)	
4.57	0.219	Response in EW direction
4.57	0.219	Response in NS direction
9.46	0.106	
12.54	0.080	Response in UD direction
12.93	0.077	Response in NS direction
12.93	0.077	Response in EW direction
22.96	0.044	Response in UD direction
23.58	0.042	Response in NS direction
23.58	0.042	Response in EW direction
26.24	0.038	Response in EW direction
26.24	0.038	Response in NS direction
26.71	0.037	
37.68	0.027	Response in EW direction
37.68	0.027	Response in NS direction
38.61	0.026	Response in UD direction
40.74	0.025	
42.73	0.023	Response in EW direction
42.73	0.023	Response in NS direction
44.31	0.023	Response in UD direction
48.12	0.021	
48.12	0.021	

Table 3H.3-3 Modal Properties of Containment Internal Structure Lumped Mass Stick Model (Fixed-Base)

Mode		Comment
Freq. (Hz)	Period (sec)	
5.73	0.175	Response in NS direction
6.25	0.160	Response in EW direction
9.12	0.110	Response in EW direction
9.42	0.106	Response in NS direction
12.94	0.077	
18.89	0.053	
19.36	0.052	Response in EW direction
20.76	0.048	Response in NS,UD direction
22.28	0.045	
23.31	0.043	
24.57	0.041	
25.21	0.040	Response in NS,UD direction
27.88	0.036	
28.75	0.035	Response in EW direction
31.32	0.032	Response in EW direction
31.39	0.032	Response in UD direction
34.45	0.029	
37.08	0.027	Response in NS direction
38.08	0.026	
40.12	0.025	
40.76	0.025	Response in UD direction
41.94	0.024	
45.71	0.022	Response in EW direction
49.31	0.020	

Table 3H.3-4 Modal Properties of R/B-PCCV-Containment Internal Structure SSI Model

Subgrade Vs (ft/sec)	Major Mode	Freq. (Hz)	Period (sec)	Modal Participation Factors			Comment
				N-S (x)	E-W (y)	Vert. (z)	
1,000	1	1.33	0.751	-0.1	40.9	0.0	Basemat E-W Translation
	2	1.39	0.720	-41.7	-0.1	2.0	Basemat N-S Translation
	3	1.86	0.539	2.5	0.0	43.5	Basemat Vertical Translation
	4	2.54	0.393	0.4	-0.5	-0.1	Basemat torsion
	5	2.93	0.342	12.4	-0.1	-2.1	Basemat rocking in N-S Direction
	6	3.02	0.331	-0.1	-15.2	0.1	Basemat rocking in E-W Direction
3,500	1	3.66	0.273	-0.4	33.4	-0.2	Basemat E-W Translation
	2	3.79	0.264	-32.9	-0.3	1.8	Basemat N-S Translation
	3	4.90	0.204	11.7	-0.7	-3.0	Basemat rocking in N-S Direction
	4	5.02	0.199	-0.6	-16.1	1.0	Basemat rocking in E-W Direction
	7	6.25	0.160	-1.5	-1.1	-11.1	Basemat torsion
	8	6.35	0.157	-6.1	-0.9	-40.6	Basemat Vertical Translation
6,500	1	4.26	0.235	-0.3	22.5	-0.1	Basemat E-W Translation
	2	4.31	0.232	-21.7	-0.2	0.9	Basemat N-S Translation
	3	5.08	0.197	13.5	-0.5	-2.1	Basemat rocking in N-S Direction
	4	5.44	0.184	0.2	22.4	-0.8	Basemat rocking in E-W Direction
	12	9.48	0.106	7.3	2.0	15.5	Basemat torsion
	13	10.5	0.095	5.2	-16.7	-17.0	Basemat Vertical Translation

NOTE: Fixed Base is assumed for shear velocity = 8,000 ft/sec. Therefore, value cannot be computed.

Table 3H.3-5 R/B-PCCV-Containment Internal Structure Lumped Mass Stick Model, Maximum Accelerations – Soil Subgrade (V_s = 1,000 ft/s)

Model	Mass Node	Max. N-S Acc. (g)				Max. E-W Acc. (g)				Max. Vert. Acc. (g)			
		Earthquake				Earthquake				Earthquake			
		H1	H2	V	3-C*	H1	H2	V	3-C*	H1	H2	V	3-C*
R/B	FH08	0.48	0.01	0.09	0.49	0.01	0.49	0.02	0.49	0.17	0.05	0.32	0.36
	FH07	0.43	0.01	0.07	0.43	0.01	0.44	0.02	0.44	0.17	0.05	0.31	0.36
	FH06	0.39	0.01	0.04	0.39	0.01	0.39	0.01	0.39	0.17	0.05	0.30	0.35
	RE41	0.39	0.02	0.04	0.39	0.04	0.40	0.06	0.41	0.06	0.21	0.32	0.39
	RE42	0.39	0.03	0.03	0.39	0.03	0.40	0.03	0.40	0.02	0.21	0.30	0.37
	RE05	0.40	0.01	0.04	0.40	0.01	0.44	0.02	0.44	0.17	0.02	0.31	0.35
	RE04	0.38	0.01	0.02	0.38	0.01	0.41	0.01	0.41	0.17	0.01	0.30	0.35
	RE03	0.36	0.00	0.02	0.36	0.00	0.36	0.01	0.36	0.03	0.01	0.29	0.29
	RE02	0.34	0.00	0.02	0.34	0.00	0.33	0.01	0.33	0.02	0.00	0.28	0.28
	RE01	0.32	0.00	0.01	0.32	0.00	0.32	0.01	0.32	0.01	0.00	0.27	0.27
PCCV	CV11	0.57	0.01	0.07	0.57	0.00	0.77	0.02	0.77	0.03	0.01	0.36	0.37
	CV10	0.56	0.01	0.07	0.56	0.00	0.76	0.02	0.76	0.02	0.01	0.35	0.35
	CV09	0.52	0.00	0.06	0.52	0.00	0.68	0.01	0.68	0.02	0.01	0.33	0.33
	CV08	0.48	0.00	0.05	0.48	0.00	0.59	0.01	0.59	0.02	0.01	0.31	0.31
	CV07	0.45	0.00	0.05	0.45	0.00	0.54	0.01	0.54	0.01	0.01	0.31	0.31
	CV06	0.42	0.01	0.04	0.42	0.00	0.48	0.01	0.48	0.01	0.01	0.30	0.30
	CV05	0.39	0.01	0.04	0.39	0.00	0.43	0.01	0.43	0.01	0.00	0.29	0.29
	CV04	0.38	0.01	0.03	0.38	0.00	0.39	0.01	0.39	0.01	0.00	0.28	0.28
	CV03	0.37	0.01	0.03	0.37	0.00	0.37	0.01	0.37	0.01	0.00	0.28	0.28
	CV02	0.35	0.01	0.02	0.35	0.00	0.34	0.01	0.34	0.01	0.00	0.27	0.27
	CV01	0.32	0.00	0.02	0.32	0.00	0.31	0.01	0.31	0.01	0.00	0.27	0.27
Containment Internal Structure	IC09	0.51	0.01	0.07	0.52	0.01	0.58	0.05	0.58	0.07	0.01	0.31	0.32
	IC08	0.44	0.00	0.04	0.44	0.00	0.49	0.03	0.49	0.07	0.01	0.31	0.31
	IC18	0.44	0.00	0.04	0.44	0.00	0.48	0.03	0.48	0.07	0.01	0.31	0.31
	IC61	0.38	0.01	0.05	0.38	0.01	0.40	0.02	0.40	0.02	0.11	0.28	0.30
	IC62	0.38	0.02	0.04	0.38	0.01	0.40	0.02	0.40	0.02	0.11	0.28	0.30
	IC05	0.36	0.00	0.03	0.36	0.00	0.37	0.01	0.37	0.02	0.00	0.28	0.28
	IC15	0.35	0.00	0.03	0.35	0.00	0.34	0.01	0.34	0.01	0.00	0.27	0.27
	IC04	0.34	0.00	0.03	0.34	0.00	0.33	0.01	0.33	0.01	0.01	0.27	0.27
	IC14	0.34	0.00	0.03	0.34	0.00	0.33	0.01	0.33	0.01	0.01	0.27	0.27
	IC03	0.33	0.00	0.02	0.33	0.00	0.32	0.01	0.32	0.01	0.00	0.26	0.26
	IC02	0.32	0.00	0.02	0.32	0.00	0.32	0.01	0.32	0.01	0.00	0.26	0.26
	IC01	0.31	0.00	0.01	0.31	0.00	0.31	0.00	0.31	0.01	0.00	0.26	0.26

*: combined by SRSS method

Table 3H.3-6 R/B-PCCV-Containment Internal Structure Lumped Mass Stick Model, Maximum Accelerations – Rock Subgrade (Vs = 3,500 ft/s)

Model	Mass Node	Max. N-S Acc. (g)				Max. E-W Acc. (g)				Max. Vert. Acc. (g)			
		Earthquake				Earthquake				Earthquake			
		H1	H2	V	3-C*	H1	H2	V	3-C*	H1	H2	V	3-C*
R/B	FH08	1.68	0.03	0.24	1.70	0.06	0.99	0.09	1.00	0.41	0.11	0.56	0.70
	FH07	1.00	0.03	0.18	1.02	0.04	0.83	0.07	0.83	0.40	0.12	0.53	0.67
	FH06	0.70	0.03	0.11	0.71	0.03	0.72	0.06	0.72	0.39	0.11	0.50	0.64
	RE41	0.62	0.11	0.19	0.65	0.18	0.81	0.22	0.86	0.18	0.42	0.53	0.70
	RE42	0.63	0.08	0.13	0.65	0.15	0.74	0.12	0.76	0.08	0.43	0.49	0.65
	RE05	0.71	0.07	0.18	0.73	0.04	0.83	0.07	0.83	0.43	0.07	0.48	0.65
	RE04	0.64	0.04	0.11	0.65	0.03	0.77	0.04	0.77	0.43	0.03	0.45	0.62
	RE03	0.56	0.02	0.10	0.57	0.01	0.65	0.05	0.65	0.09	0.03	0.39	0.40
	RE02	0.49	0.01	0.08	0.50	0.01	0.54	0.04	0.55	0.04	0.01	0.37	0.38
	RE01	0.46	0.01	0.06	0.47	0.01	0.48	0.03	0.48	0.03	0.01	0.35	0.35
PCCV	CV11	1.96	0.03	0.13	1.96	0.03	1.82	0.06	1.82	0.08	0.04	0.89	0.89
	CV10	1.93	0.03	0.13	1.93	0.02	1.79	0.06	1.79	0.07	0.04	0.77	0.78
	CV09	1.76	0.02	0.10	1.76	0.02	1.65	0.04	1.65	0.05	0.03	0.67	0.68
	CV08	1.52	0.01	0.08	1.52	0.01	1.45	0.02	1.45	0.04	0.02	0.61	0.61
	CV07	1.28	0.01	0.07	1.28	0.01	1.25	0.03	1.25	0.04	0.02	0.59	0.59
	CV06	1.03	0.02	0.06	1.04	0.02	1.04	0.03	1.04	0.04	0.02	0.54	0.54
	CV05	0.85	0.02	0.08	0.85	0.02	0.87	0.03	0.87	0.04	0.02	0.50	0.50
	CV04	0.74	0.02	0.08	0.74	0.01	0.76	0.03	0.76	0.03	0.01	0.47	0.47
	CV03	0.68	0.02	0.08	0.68	0.01	0.71	0.03	0.71	0.03	0.01	0.45	0.45
	CV02	0.56	0.02	0.08	0.57	0.01	0.60	0.03	0.60	0.03	0.01	0.42	0.42
	CV01	0.46	0.01	0.07	0.47	0.01	0.47	0.02	0.47	0.02	0.01	0.37	0.37
Containment Internal Structure	IC09	2.21	0.04	0.30	2.23	0.08	2.07	0.19	2.08	0.28	0.03	0.47	0.54
	IC08	1.28	0.02	0.13	1.29	0.05	1.21	0.11	1.22	0.27	0.02	0.45	0.53
	IC18	1.22	0.01	0.12	1.23	0.04	1.16	0.11	1.17	0.26	0.02	0.45	0.52
	IC61	0.70	0.08	0.20	0.73	0.03	0.88	0.11	0.89	0.06	0.22	0.40	0.45
	IC62	0.69	0.08	0.21	0.72	0.03	0.88	0.07	0.89	0.06	0.21	0.40	0.46
	IC05	0.61	0.02	0.15	0.63	0.01	0.65	0.04	0.65	0.05	0.01	0.38	0.38
	IC15	0.55	0.01	0.13	0.57	0.01	0.56	0.03	0.56	0.04	0.01	0.37	0.37
	IC04	0.52	0.01	0.12	0.53	0.01	0.51	0.03	0.51	0.04	0.01	0.37	0.37
	IC14	0.50	0.01	0.10	0.51	0.01	0.50	0.03	0.50	0.03	0.01	0.37	0.37
	IC03	0.47	0.01	0.08	0.48	0.01	0.47	0.03	0.47	0.03	0.01	0.36	0.36
	IC02	0.45	0.01	0.06	0.45	0.01	0.46	0.02	0.46	0.02	0.01	0.35	0.35
	IC01	0.44	0.01	0.05	0.44	0.01	0.45	0.02	0.45	0.02	0.01	0.34	0.34

*: combined by SRSS method

Table 3H.3-7 R/B-PCCV-Containment Internal Structure Lumped Mass Stick Model, Maximum Accelerations – Rock Subgrade (V_s = 6,500 ft/s)

Model	Mass Node	Max. N-S Acc. (g)				Max. E-W Acc. (g)				Max. Vert. Acc. (g)			
		Earthquake				Earthquake				Earthquake			
		H1	H2	V	3-C*	H1	H2	V	3-C*	H1	H2	V	3-C*
R/B	FH08	2.19	0.04	0.35	2.21	0.08	1.17	0.13	1.18	0.55	0.18	0.79	0.98
	FH07	1.20	0.05	0.25	1.23	0.05	0.91	0.10	0.91	0.53	0.18	0.73	0.92
	FH06	0.61	0.04	0.16	0.63	0.04	0.79	0.08	0.80	0.51	0.16	0.69	0.87
	RE41	0.54	0.23	0.31	0.66	0.27	0.94	0.39	1.05	0.23	0.60	0.74	0.97
	RE42	0.60	0.20	0.23	0.67	0.28	0.86	0.22	0.93	0.16	0.64	0.65	0.92
	RE05	0.67	0.14	0.32	0.76	0.09	0.95	0.11	0.96	0.60	0.11	0.65	0.89
	RE04	0.61	0.09	0.19	0.64	0.06	0.86	0.06	0.86	0.60	0.05	0.60	0.84
	RE03	0.51	0.04	0.15	0.53	0.03	0.65	0.06	0.66	0.14	0.05	0.51	0.53
	RE02	0.46	0.04	0.15	0.48	0.03	0.58	0.07	0.58	0.07	0.03	0.45	0.46
	RE01	0.41	0.03	0.12	0.42	0.03	0.47	0.05	0.47	0.04	0.02	0.39	0.39
PCCV	CV11	2.02	0.05	0.18	2.03	0.04	2.15	0.08	2.15	0.16	0.07	1.42	1.43
	CV10	1.99	0.05	0.17	1.99	0.04	2.11	0.08	2.11	0.13	0.06	1.28	1.29
	CV09	1.80	0.03	0.13	1.81	0.02	1.90	0.05	1.90	0.08	0.04	0.97	0.98
	CV08	1.55	0.01	0.08	1.55	0.01	1.60	0.03	1.60	0.07	0.03	0.85	0.85
	CV07	1.30	0.02	0.11	1.30	0.02	1.41	0.05	1.41	0.06	0.03	0.80	0.81
	CV06	1.09	0.03	0.10	1.09	0.03	1.21	0.06	1.21	0.06	0.03	0.72	0.72
	CV05	0.90	0.03	0.12	0.91	0.03	1.03	0.06	1.03	0.05	0.02	0.64	0.65
	CV04	0.77	0.03	0.13	0.78	0.03	0.90	0.06	0.90	0.04	0.02	0.59	0.59
	CV03	0.69	0.03	0.13	0.71	0.03	0.82	0.05	0.82	0.04	0.02	0.56	0.56
	CV02	0.56	0.03	0.11	0.57	0.03	0.66	0.04	0.66	0.04	0.01	0.49	0.49
	CV01	0.43	0.02	0.08	0.44	0.02	0.46	0.04	0.46	0.03	0.01	0.39	0.39
Containment Internal Structure	IC09	2.73	0.07	0.44	2.77	0.10	2.85	0.24	2.86	0.54	0.05	0.53	0.76
	IC08	1.50	0.02	0.18	1.51	0.04	1.61	0.11	1.61	0.52	0.05	0.50	0.72
	IC18	1.43	0.02	0.17	1.44	0.04	1.53	0.10	1.54	0.52	0.05	0.49	0.71
	IC61	1.09	0.11	0.34	1.15	0.07	1.21	0.14	1.22	0.13	0.31	0.45	0.56
	IC62	1.09	0.12	0.31	1.14	0.06	1.21	0.12	1.22	0.13	0.32	0.45	0.57
	IC05	0.88	0.04	0.22	0.91	0.03	0.84	0.06	0.84	0.11	0.03	0.42	0.44
	IC15	0.70	0.03	0.16	0.72	0.02	0.64	0.05	0.64	0.08	0.02	0.40	0.41
	IC04	0.62	0.02	0.16	0.64	0.02	0.57	0.05	0.57	0.07	0.02	0.39	0.40
	IC14	0.57	0.02	0.15	0.59	0.02	0.52	0.05	0.53	0.06	0.02	0.38	0.39
	IC03	0.47	0.01	0.12	0.48	0.02	0.44	0.05	0.45	0.04	0.01	0.37	0.37
	IC02	0.41	0.02	0.10	0.42	0.02	0.40	0.05	0.41	0.03	0.01	0.35	0.35
	IC01	0.39	0.02	0.09	0.40	0.02	0.39	0.05	0.39	0.03	0.01	0.34	0.34

*: combined by SRSS method

Table 3H.3-8 R/B-PCCV-Containment Internal Structure Lumped Mass Stick Model, Maximum Accelerations – Hard Rock Subgrade (Vs = 8,000 ft/s)

Model	Mass Node	Max. N-S Acc. (g)				Max. E-W Acc. (g)				Max. Vert. Acc. (g)			
		Earthquake				Earthquake				Earthquake			
		H1	H2	V	3-C*	H1	H2	V	3-C*	H1	H2	V	3-C*
R/B	FH08	1.59	0.03	0.36	1.63	0.08	1.14	0.12	1.14	0.49	0.21	1.11	1.23
	FH07	0.92	0.05	0.29	0.97	0.06	0.96	0.11	0.96	0.44	0.20	0.91	1.03
	FH06	0.54	0.06	0.24	0.59	0.06	0.78	0.10	0.78	0.41	0.18	0.74	0.86
	RE41	0.59	0.19	0.31	0.69	0.33	0.90	0.47	1.06	0.32	0.53	0.71	0.95
	RE42	0.62	0.17	0.22	0.68	0.23	0.86	0.26	0.93	0.11	0.51	0.63	0.82
	RE05	0.83	0.12	0.37	0.92	0.08	0.93	0.17	0.95	0.50	0.10	0.53	0.74
	RE04	0.70	0.09	0.20	0.74	0.06	0.84	0.09	0.84	0.48	0.06	0.48	0.68
	RE03	0.51	0.04	0.18	0.54	0.04	0.63	0.09	0.63	0.12	0.05	0.46	0.48
	RE02	0.41	0.04	0.16	0.44	0.04	0.49	0.11	0.51	0.05	0.03	0.40	0.41
	RE01	0.34	0.02	0.10	0.36	0.02	0.40	0.06	0.40	0.02	0.01	0.34	0.34
PCCV	CV11	1.35	0.00	0.00	1.35	0.00	1.32	0.00	1.32	0.00	0.00	1.39	1.39
	CV10	1.32	0.00	0.00	1.32	0.00	1.29	0.00	1.29	0.00	0.00	1.21	1.21
	CV09	1.17	0.00	0.00	1.17	0.00	1.18	0.00	1.18	0.00	0.00	0.92	0.92
	CV08	1.01	0.00	0.00	1.01	0.00	1.02	0.00	1.02	0.00	0.00	0.82	0.82
	CV07	0.96	0.00	0.00	0.96	0.00	0.84	0.00	0.84	0.00	0.00	0.77	0.77
	CV06	0.88	0.00	0.00	0.88	0.00	0.78	0.00	0.78	0.00	0.00	0.70	0.70
	CV05	0.80	0.00	0.00	0.80	0.00	0.73	0.00	0.73	0.00	0.00	0.63	0.63
	CV04	0.72	0.00	0.00	0.72	0.00	0.68	0.00	0.68	0.00	0.00	0.57	0.57
	CV03	0.67	0.00	0.00	0.67	0.00	0.64	0.00	0.64	0.00	0.00	0.54	0.54
	CV02	0.57	0.00	0.00	0.57	0.00	0.55	0.00	0.55	0.00	0.00	0.47	0.47
	CV01	0.41	0.00	0.00	0.41	0.00	0.41	0.00	0.41	0.00	0.00	0.37	0.37
Containment Internal Structure	IC09	2.43	0.01	0.23	2.44	0.02	2.71	0.01	2.71	0.62	0.02	0.82	1.03
	IC08	1.38	0.00	0.18	1.39	0.01	1.73	0.01	1.73	0.59	0.02	0.77	0.97
	IC18	1.31	0.00	0.17	1.32	0.01	1.67	0.01	1.67	0.59	0.02	0.76	0.96
	IC61	1.05	0.07	0.31	1.10	0.04	0.96	0.07	0.97	0.18	0.36	0.55	0.68
	IC62	1.05	0.08	0.30	1.09	0.04	1.00	0.08	1.00	0.17	0.36	0.55	0.68
	IC05	0.79	0.00	0.10	0.80	0.00	0.72	0.00	0.72	0.14	0.01	0.52	0.54
	IC15	0.65	0.00	0.15	0.66	0.00	0.57	0.01	0.57	0.11	0.01	0.47	0.49
	IC04	0.58	0.01	0.19	0.61	0.01	0.53	0.01	0.53	0.09	0.01	0.45	0.46
	IC14	0.54	0.01	0.18	0.56	0.00	0.49	0.01	0.49	0.08	0.01	0.43	0.43
	IC03	0.45	0.00	0.15	0.47	0.00	0.41	0.00	0.41	0.05	0.00	0.38	0.39
	IC02	0.37	0.00	0.08	0.38	0.00	0.35	0.00	0.35	0.03	0.00	0.34	0.34
	IC01	0.34	0.00	0.04	0.34	0.00	0.33	0.00	0.33	0.02	0.00	0.32	0.32

*: combined by SRSS method

Table 3H.3-9 R/B-PCCV-Containment Internal Structure Lumped Mass Stick Model Design Forces

Model	Mass Node	Elevation(in)	N-S Direction		E-W Direction	
			Shear Force (kip)	Moment (kip-ft)	Shear Force (kip)	Moment (kip-ft)
R/B	FH08	1,854	16,000	533,000	8,500	425,000
	FH07	1,508	22,500	1,130,000	13,600	850,000
	FH06	1,212	25,500	1,780,000	17,300	1,270,000
	RE41	1,212	15,400	442,000	9,200	275,000
	RE42	1,212	7,800	333,000	4,400	150,000
	RE05	1,386	17,600	458,000	18,600	942,000
	RE04	1,212	30,800	1,170,000	40,200	2,420,000
	RE03	917	95,800	12,100,000	108,100	8,160,000
	RE02	602	137,600	16,300,000	152,100	12,200,000
	RE01	303	168,200	19,700,000	184,000	16,100,000
PCCV	CV11	2,762	1,910	10,300	1,910	10,300
	CV10	2,700	10,900	288,000	10,900	288,000
	CV09	2,420	25,900	1,140,000	25,900	1,140,000
	CV08	2,077	40,100	2,430,000	40,100	2,430,000
	CV07	1,747	56,500	4,370,000	56,500	4,370,000
	CV06	1,386	66,200	6,080,000	66,200	6,080,000
	CV05	1,106	73,600	7,340,000	73,600	7,340,000
	CV04	917	78,200	8,020,000	78,200	8,020,000
	CV03	819	82,000	9,500,000	82,000	9,500,000
	CV02	602	87,100	11,700,000	87,100	11,700,000
	CV01	303	90,500	13,800,000	90,500	13,800,000
Containment Internal Structure	IC09	1,674	2,300	63,300	2,500	71,700
	IC08	1,348	5,800	83,300	6,500	100,000
	IC18	1,329	6,300	300,000	7,200	342,000
	IC61	917	5,300	117,000	5,100	100,000
	IC62	1,159	5,300	117,000	5,300	108,000
	IC05	1,159	33,800	1,040,000	30,400	1,040,000
	IC15	917	34,200	1,350,000	30,800	1,330,000
	IC04	710	45,900	1,650,000	40,600	1,590,000
	IC14	602	47,900	2,150,000	42,300	2,030,000
	IC03	548	54,300	2,770,000	48,000	2,560,000
	IC02	427.25	61,300	3,390,000	54,700	3,130,000
	IC01	303	68,000	4,380,000	61,300	4,030,000

Notes:

1. The forces and moments shown above envelope all four generic subgrade conditions and are applied to the FE models for structural design as described in Section 3.8.
2. The forces and moments are obtained by combination of the three orthogonal directions used in the model by SRSS or the Newmark 100%-40%-40% method

Table 3H.3-10 Lumped Mass Stick Model Design Shear Forces and Moments

Model	Mass Node	Elevation (in)	N-S Direction		E-W Direction	
			Shear Force (kip)	Moment (kip-ft)	Shear Force (kip)	Moment (kip-ft)
PS/B	PSB2	474	7,170	285,000	7,450	326,000
	PSB1	43	12,500	685,000	13,100	744,000

Notes:

1) The forces and moments shown above envelope all four generic subgrade conditions and are applied to the FE models for structural design as described in Section 3.8.

2) The forces and moments are obtained by combination of the three orthogonal directions used in the model by SRSS or the Newmark 100% - 40% - 40%

Table 3H.3-11 Maximum Displacements – Soil Subgrade (V_s = 1,000 ft/s)

Model	Mass Node	Max. N-S Disp. (in)				Max. E-W Disp. (in)				Max. Vert. Disp. (in)			
		Earthquake				Earthquake				Earthquake			
		H1	H2	V	3-C*	H1	H2	V	3-C*	H1	H2	V	3-C*
R/B	FH08	2.20	0.01	0.08	2.20	0.01	2.34	0.00	2.34	0.50	0.13	0.37	0.64
	FH07	2.00	0.01	0.06	2.00	0.01	2.12	0.00	2.12	0.52	0.14	0.37	0.65
	FH06	1.84	0.01	0.04	1.84	0.01	1.93	0.00	1.93	0.52	0.13	0.37	0.65
	RE41	1.81	0.04	0.04	1.81	0.01	1.99	0.01	1.99	0.10	0.55	0.40	0.69
	RE42	1.81	0.05	0.04	1.81	0.01	2.00	0.00	2.00	0.04	0.56	0.41	0.69
	RE05	1.88	0.01	0.04	1.88	0.01	2.17	0.00	2.17	0.50	0.05	0.43	0.66
	RE04	1.81	0.00	0.04	1.81	0.01	2.06	0.00	2.06	0.52	0.01	0.43	0.67
	RE03	1.69	0.00	0.03	1.69	0.00	1.82	0.00	1.82	0.09	0.01	0.40	0.41
	RE02	1.57	0.00	0.03	1.57	0.00	1.62	0.00	1.62	0.04	0.00	0.40	0.40
	RE01	1.44	0.00	0.03	1.44	0.00	1.43	0.00	1.43	0.03	0.01	0.40	0.40
PCCV	CV11	2.53	0.00	0.09	2.53	0.00	3.07	0.01	3.07	0.02	0.00	0.41	0.41
	CV10	2.50	0.00	0.09	2.50	0.00	3.03	0.01	3.03	0.02	0.00	0.41	0.41
	CV09	2.39	0.00	0.08	2.39	0.00	2.85	0.00	2.85	0.02	0.00	0.41	0.41
	CV08	2.24	0.00	0.07	2.24	0.00	2.62	0.00	2.62	0.02	0.00	0.41	0.41
	CV07	2.10	0.00	0.06	2.10	0.00	2.40	0.00	2.40	0.02	0.00	0.41	0.41
	CV06	1.94	0.00	0.05	1.94	0.00	2.16	0.00	2.16	0.02	0.00	0.40	0.40
	CV05	1.81	0.00	0.04	1.81	0.00	1.97	0.00	1.97	0.02	0.00	0.40	0.40
	CV04	1.73	0.00	0.04	1.73	0.00	1.84	0.00	1.84	0.02	0.00	0.40	0.40
	CV03	1.68	0.00	0.04	1.68	0.00	1.78	0.00	1.78	0.02	0.00	0.40	0.40
	CV02	1.58	0.00	0.03	1.58	0.00	1.63	0.00	1.63	0.02	0.00	0.40	0.40
	CV01	1.45	0.00	0.03	1.45	0.00	1.44	0.00	1.44	0.02	0.00	0.40	0.40
Containment Internal Structure	IC09	2.12	0.00	0.06	2.12	0.00	2.38	0.01	2.38	0.18	0.00	0.41	0.45
	IC08	1.93	0.00	0.04	1.93	0.00	2.14	0.01	2.14	0.19	0.00	0.41	0.45
	IC18	1.92	0.00	0.04	1.92	0.00	2.13	0.01	2.13	0.19	0.00	0.41	0.45
	IC61	1.77	0.02	0.04	1.77	0.00	1.96	0.00	1.96	0.03	0.27	0.40	0.48
	IC62	1.77	0.02	0.04	1.77	0.00	1.96	0.00	1.96	0.03	0.27	0.40	0.48
	IC05	1.68	0.00	0.03	1.68	0.00	1.81	0.00	1.81	0.02	0.01	0.40	0.40
	IC15	1.59	0.00	0.03	1.59	0.00	1.67	0.00	1.67	0.02	0.01	0.40	0.40
	IC04	1.55	0.00	0.03	1.55	0.00	1.60	0.00	1.60	0.02	0.02	0.39	0.39
	IC14	1.53	0.00	0.03	1.53	0.00	1.57	0.00	1.57	0.02	0.02	0.39	0.39
	IC03	1.48	0.00	0.03	1.48	0.00	1.49	0.00	1.49	0.02	0.00	0.39	0.39
	IC02	1.43	0.00	0.03	1.43	0.00	1.42	0.00	1.42	0.02	0.00	0.39	0.39
	IC01	1.39	0.00	0.03	1.39	0.00	1.36	0.00	1.36	0.02	0.00	0.39	0.39

Notes: Displacements shown in the above table include the subgrade displacements.

*: combined by SRSS method

Table 3H.3-12 Maximum Displacements – Rock Subgrade (V_s = 3,500 ft/s)

Model	Mass Node	Max. N-S Disp. (in)				Max. E-W Disp. (in)				Max. Vert. Disp. (in)			
		Earthquake				Earthquake				Earthquake			
		H1	H2	V	3-C*	H1	H2	V	3-C*	H1	H2	V	3-C*
R/B	FH08	0.87	0.01	0.10	0.88	0.01	0.64	0.01	0.64	0.15	0.04	0.07	0.17
	FH07	0.61	0.01	0.06	0.61	0.01	0.55	0.01	0.55	0.16	0.05	0.06	0.18
	FH06	0.44	0.01	0.03	0.44	0.01	0.46	0.01	0.46	0.16	0.04	0.06	0.18
	RE41	0.36	0.02	0.02	0.36	0.02	0.48	0.02	0.48	0.03	0.16	0.07	0.18
	RE42	0.37	0.02	0.02	0.37	0.01	0.49	0.01	0.49	0.02	0.17	0.08	0.19
	RE05	0.40	0.01	0.03	0.40	0.01	0.55	0.01	0.55	0.17	0.02	0.10	0.19
	RE04	0.37	0.01	0.03	0.37	0.01	0.51	0.01	0.51	0.17	0.00	0.09	0.20
	RE03	0.32	0.00	0.02	0.32	0.00	0.41	0.01	0.41	0.03	0.01	0.07	0.08
	RE02	0.27	0.00	0.01	0.27	0.00	0.32	0.00	0.32	0.02	0.00	0.07	0.07
	RE01	0.22	0.00	0.01	0.22	0.00	0.25	0.00	0.25	0.01	0.00	0.07	0.07
PCCV	CV11	1.27	0.01	0.05	1.27	0.01	1.35	0.01	1.35	0.01	0.00	0.12	0.12
	CV10	1.25	0.01	0.05	1.25	0.01	1.33	0.01	1.33	0.01	0.00	0.11	0.11
	CV09	1.15	0.00	0.04	1.15	0.01	1.22	0.01	1.22	0.01	0.00	0.10	0.10
	CV08	1.02	0.00	0.04	1.02	0.00	1.08	0.01	1.08	0.01	0.00	0.09	0.09
	CV07	0.87	0.00	0.03	0.87	0.00	0.94	0.01	0.94	0.01	0.00	0.09	0.09
	CV06	0.71	0.00	0.03	0.71	0.00	0.77	0.01	0.77	0.01	0.00	0.08	0.08
	CV05	0.59	0.00	0.02	0.59	0.00	0.64	0.00	0.64	0.01	0.00	0.08	0.08
	CV04	0.50	0.00	0.02	0.50	0.00	0.55	0.00	0.55	0.01	0.00	0.08	0.08
	CV03	0.46	0.00	0.02	0.46	0.00	0.51	0.00	0.51	0.01	0.00	0.07	0.07
	CV02	0.37	0.00	0.02	0.37	0.00	0.41	0.00	0.41	0.00	0.00	0.07	0.07
	CV01	0.25	0.00	0.01	0.25	0.00	0.28	0.00	0.28	0.00	0.00	0.07	0.07
Containment Internal Structure	IC09	0.80	0.01	0.06	0.80	0.02	0.83	0.04	0.83	0.07	0.00	0.08	0.10
	IC08	0.58	0.00	0.03	0.58	0.01	0.64	0.03	0.64	0.07	0.00	0.08	0.11
	IC18	0.56	0.00	0.03	0.56	0.01	0.63	0.03	0.63	0.07	0.00	0.08	0.11
	IC61	0.35	0.01	0.02	0.35	0.00	0.44	0.01	0.44	0.01	0.09	0.07	0.11
	IC62	0.35	0.01	0.02	0.35	0.00	0.44	0.01	0.44	0.01	0.09	0.07	0.11
	IC05	0.31	0.00	0.02	0.31	0.00	0.38	0.01	0.38	0.01	0.00	0.07	0.07
	IC15	0.27	0.00	0.02	0.27	0.00	0.32	0.01	0.32	0.01	0.00	0.07	0.07
	IC04	0.26	0.00	0.01	0.26	0.00	0.29	0.01	0.29	0.00	0.01	0.07	0.07
	IC14	0.25	0.00	0.01	0.25	0.00	0.28	0.01	0.28	0.00	0.00	0.07	0.07
	IC03	0.22	0.00	0.01	0.22	0.00	0.25	0.00	0.25	0.00	0.00	0.06	0.06
	IC02	0.20	0.00	0.01	0.20	0.00	0.22	0.00	0.22	0.00	0.00	0.06	0.06
	IC01	0.19	0.00	0.01	0.19	0.00	0.20	0.00	0.20	0.00	0.00	0.06	0.06

Notes: Displacements shown in the above table include the subgrade displacements.

*: combined by SRSS method

Table 3H.3-13 Maximum Displacements – Rock Subgrade (V_s = 6,500 ft/s)

Model	Mass Node	Max. N-S Disp. (in)				Max. E-W Disp. (in)				Max. Vert. Disp. (in)			
		Earthquake				Earthquake				Earthquake			
		H1	H2	V	3-C*	H1	H2	V	3-C*	H1	H2	V	3-C*
R/B	FH08	0.86	0.01	0.10	0.86	0.01	0.40	0.02	0.40	0.13	0.03	0.05	0.14
	FH07	0.50	0.01	0.05	0.50	0.01	0.33	0.01	0.33	0.13	0.03	0.04	0.14
	FH06	0.27	0.01	0.03	0.27	0.01	0.27	0.01	0.27	0.13	0.03	0.04	0.14
	RE41	0.21	0.02	0.03	0.21	0.02	0.30	0.03	0.31	0.02	0.11	0.05	0.12
	RE42	0.21	0.02	0.02	0.22	0.02	0.30	0.01	0.30	0.02	0.12	0.05	0.13
	RE05	0.24	0.01	0.03	0.24	0.01	0.34	0.01	0.34	0.14	0.02	0.06	0.15
	RE04	0.21	0.01	0.02	0.22	0.01	0.31	0.01	0.31	0.14	0.01	0.06	0.16
	RE03	0.18	0.00	0.02	0.18	0.00	0.24	0.01	0.24	0.03	0.01	0.04	0.05
	RE02	0.14	0.00	0.02	0.14	0.00	0.18	0.01	0.18	0.01	0.00	0.03	0.03
	RE01	0.09	0.00	0.01	0.09	0.00	0.12	0.01	0.12	0.01	0.00	0.03	0.03
PCCV	CV11	1.06	0.01	0.04	1.06	0.00	1.13	0.01	1.13	0.01	0.00	0.11	0.11
	CV10	1.04	0.01	0.04	1.04	0.00	1.12	0.01	1.12	0.01	0.00	0.10	0.10
	CV09	0.95	0.00	0.03	0.95	0.00	1.02	0.01	1.02	0.01	0.00	0.08	0.08
	CV08	0.83	0.00	0.03	0.83	0.00	0.90	0.01	0.90	0.01	0.00	0.07	0.07
	CV07	0.70	0.00	0.03	0.70	0.00	0.77	0.01	0.77	0.01	0.00	0.07	0.07
	CV06	0.55	0.00	0.02	0.55	0.00	0.61	0.01	0.61	0.01	0.00	0.06	0.06
	CV05	0.44	0.00	0.02	0.44	0.00	0.49	0.01	0.49	0.00	0.00	0.05	0.05
	CV04	0.36	0.00	0.02	0.36	0.00	0.41	0.01	0.41	0.00	0.00	0.05	0.05
	CV03	0.32	0.00	0.01	0.32	0.00	0.37	0.00	0.37	0.00	0.00	0.05	0.05
	CV02	0.24	0.00	0.01	0.24	0.00	0.28	0.00	0.28	0.00	0.00	0.04	0.04
	CV01	0.14	0.00	0.01	0.14	0.00	0.16	0.00	0.16	0.00	0.00	0.03	0.03
Containment Internal Structure	IC09	0.82	0.01	0.08	0.82	0.01	0.68	0.03	0.68	0.07	0.00	0.04	0.07
	IC08	0.50	0.00	0.04	0.50	0.01	0.45	0.02	0.45	0.07	0.00	0.04	0.07
	IC18	0.48	0.00	0.04	0.48	0.01	0.44	0.02	0.44	0.07	0.00	0.04	0.07
	IC61	0.24	0.02	0.03	0.24	0.01	0.30	0.01	0.30	0.01	0.07	0.03	0.08
	IC62	0.24	0.02	0.03	0.24	0.01	0.30	0.01	0.30	0.01	0.07	0.03	0.08
	IC05	0.20	0.00	0.02	0.20	0.00	0.23	0.01	0.23	0.01	0.00	0.03	0.03
	IC15	0.16	0.00	0.02	0.16	0.00	0.18	0.01	0.18	0.00	0.00	0.03	0.03
	IC04	0.14	0.00	0.01	0.14	0.00	0.15	0.01	0.15	0.00	0.00	0.03	0.03
	IC14	0.13	0.00	0.01	0.13	0.00	0.14	0.00	0.14	0.00	0.00	0.02	0.02
	IC03	0.10	0.00	0.01	0.10	0.00	0.11	0.00	0.11	0.00	0.00	0.02	0.02
	IC02	0.08	0.00	0.01	0.08	0.00	0.09	0.00	0.09	0.00	0.00	0.02	0.02
	IC01	0.07	0.00	0.01	0.07	0.00	0.08	0.00	0.08	0.00	0.00	0.02	0.02

Note: Displacements shown in the above table include the subgrade displacements.

*: combined by SRSS method

Table 3H.3-14 Maximum Displacements – Hard Rock Subgrade (V_s = 8,000 ft/s)

Model	Mass Node	Max. N-S Disp. (in)				Max. E-W Disp. (in)				Max. Vert. Disp. (in)			
		Earthquake				Earthquake				Earthquake			
		H1	H2	V	3-C*	H1	H2	V	3-C*	H1	H2	V	3-C*
R/B	FH08	0.59	0.01	0.08	0.59	0.01	0.29	0.02	0.29	0.07	0.03	0.04	0.08
	FH07	0.33	0.01	0.04	0.33	0.01	0.23	0.01	0.23	0.07	0.03	0.04	0.08
	FH06	0.17	0.01	0.02	0.17	0.01	0.17	0.01	0.17	0.07	0.03	0.03	0.08
	RE41	0.12	0.02	0.03	0.12	0.03	0.19	0.03	0.20	0.02	0.08	0.03	0.09
	RE42	0.12	0.02	0.02	0.12	0.02	0.19	0.01	0.19	0.01	0.08	0.03	0.09
	RE05	0.14	0.01	0.03	0.15	0.01	0.23	0.01	0.23	0.08	0.02	0.04	0.08
	RE04	0.13	0.01	0.03	0.13	0.01	0.20	0.01	0.20	0.08	0.01	0.03	0.08
	RE03	0.09	0.00	0.02	0.09	0.00	0.14	0.01	0.14	0.02	0.01	0.02	0.02
	RE02	0.06	0.00	0.02	0.06	0.00	0.08	0.01	0.08	0.01	0.00	0.01	0.01
	RE01	0.03	0.00	0.01	0.03	0.00	0.04	0.00	0.04	0.00	0.00	0.01	0.01
PCCV	CV11	0.62	0.00	0.00	0.62	0.00	0.61	0.00	0.61	0.00	0.00	0.09	0.09
	CV10	0.60	0.00	0.00	0.60	0.00	0.60	0.00	0.60	0.00	0.00	0.08	0.08
	CV09	0.55	0.00	0.00	0.55	0.00	0.55	0.00	0.55	0.00	0.00	0.06	0.06
	CV08	0.48	0.00	0.00	0.48	0.00	0.47	0.00	0.47	0.00	0.00	0.05	0.05
	CV07	0.40	0.00	0.00	0.40	0.00	0.39	0.00	0.39	0.00	0.00	0.05	0.05
	CV06	0.32	0.00	0.00	0.32	0.00	0.31	0.00	0.31	0.00	0.00	0.04	0.04
	CV05	0.25	0.00	0.00	0.25	0.00	0.23	0.00	0.23	0.00	0.00	0.03	0.03
	CV04	0.20	0.00	0.00	0.20	0.00	0.19	0.00	0.19	0.00	0.00	0.03	0.03
	CV03	0.18	0.00	0.00	0.18	0.00	0.16	0.00	0.16	0.00	0.00	0.03	0.03
	CV02	0.12	0.00	0.00	0.12	0.00	0.11	0.00	0.11	0.00	0.00	0.02	0.02
	CV01	0.06	0.00	0.00	0.06	0.00	0.05	0.00	0.05	0.00	0.00	0.01	0.01
Containment Internal Structure	IC09	0.70	0.00	0.05	0.70	0.00	0.63	0.00	0.63	0.05	0.00	0.02	0.06
	IC08	0.40	0.00	0.03	0.40	0.00	0.41	0.00	0.41	0.05	0.00	0.02	0.06
	IC18	0.38	0.00	0.02	0.38	0.00	0.40	0.00	0.40	0.05	0.00	0.02	0.06
	IC61	0.12	0.01	0.01	0.12	0.00	0.18	0.00	0.18	0.01	0.05	0.01	0.05
	IC62	0.12	0.01	0.01	0.13	0.00	0.18	0.00	0.18	0.01	0.05	0.01	0.05
	IC05	0.09	0.00	0.01	0.09	0.00	0.13	0.00	0.13	0.01	0.00	0.01	0.01
	IC15	0.06	0.00	0.01	0.06	0.00	0.09	0.00	0.09	0.01	0.00	0.01	0.01
	IC04	0.05	0.00	0.01	0.05	0.00	0.07	0.00	0.07	0.00	0.00	0.01	0.01
	IC14	0.04	0.00	0.01	0.04	0.00	0.05	0.00	0.05	0.00	0.00	0.01	0.01
	IC03	0.03	0.00	0.00	0.03	0.00	0.03	0.00	0.03	0.00	0.00	0.00	0.00
	IC02	0.01	0.00	0.00	0.01	0.00	0.01	0.00	0.01	0.00	0.00	0.00	0.00
	IC01	0.01	0.00	0.00	0.01	0.00	0.01	0.00	0.01	0.00	0.00	0.00	0.00

Note: Displacements shown in the above table are from the top of basemat.

*: combined by SRSS method

~~Security Related Information – Withhold Under 10 CFR 2.390~~

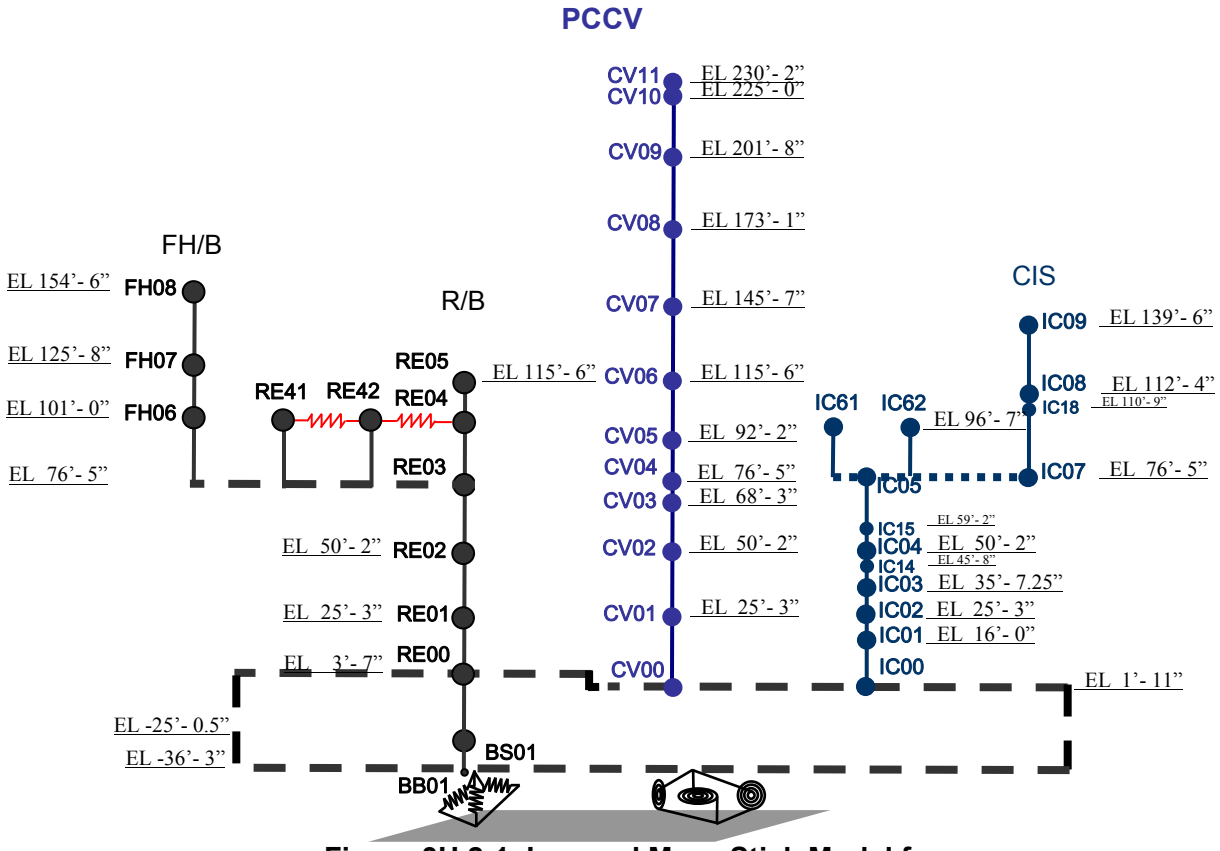

Figure 3H.2-1 Lumped Mass Stick Model for R/B-PCCV-Containment Internal Structure (Sheet 1 of 3)

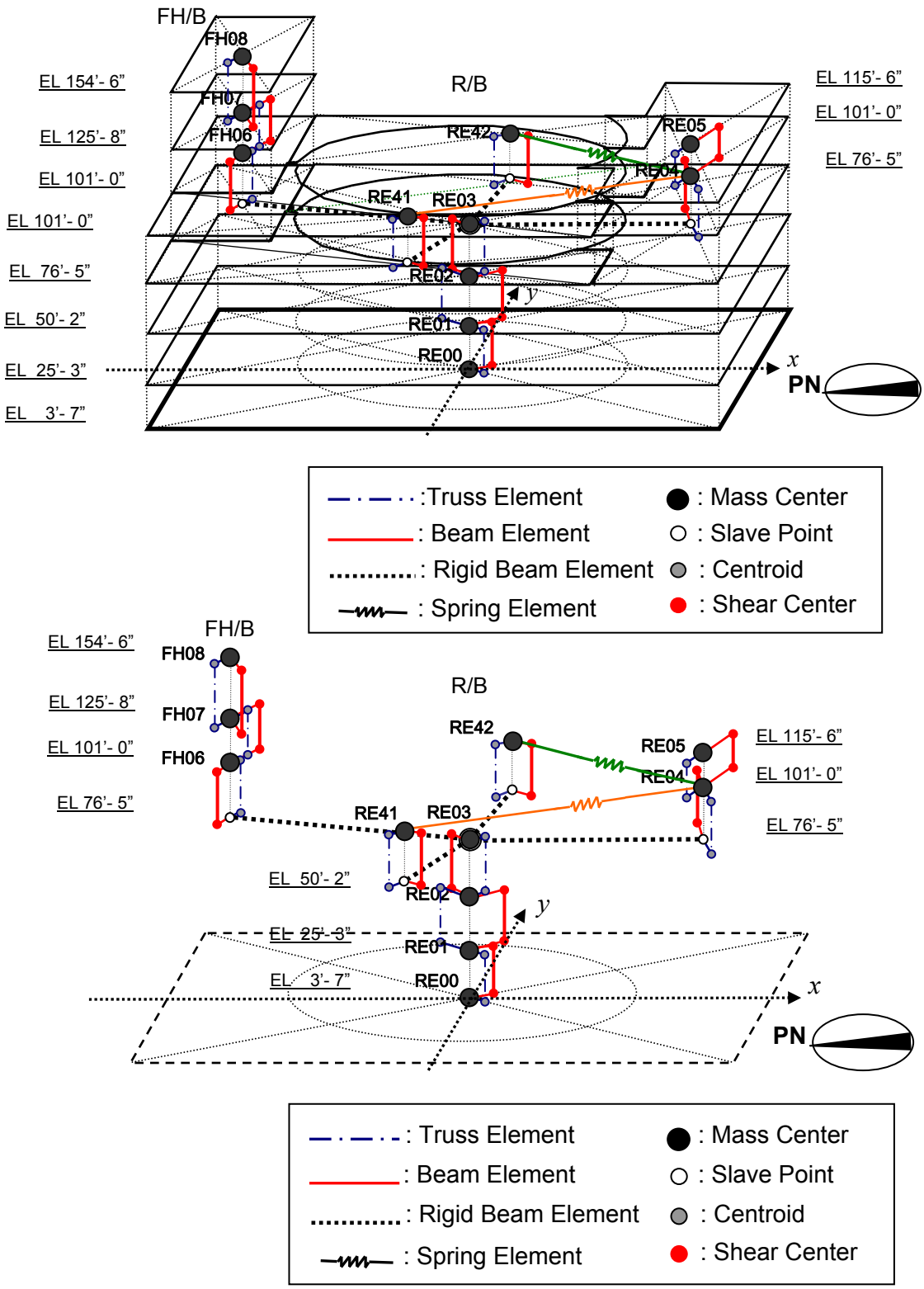

Figure 3H.2-1 Lumped Mass Stick Model for R/B-PCCV-Containment Internal Structure (Sheet 2 of 3)

~~Security-Related Information – Withhold Under 10 CFR 2.390~~

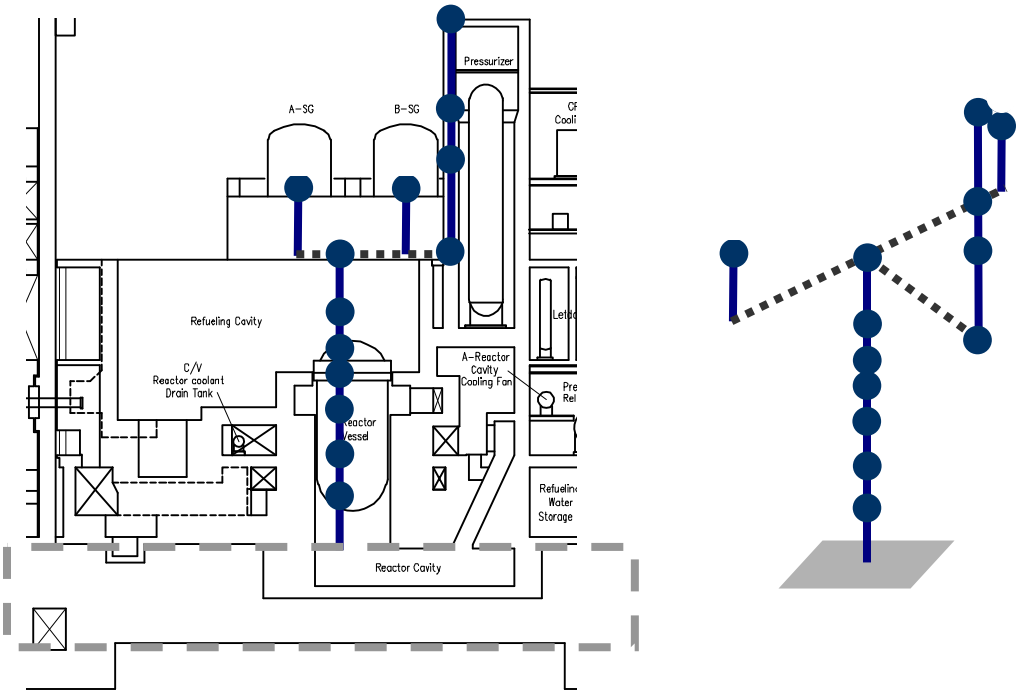

Note: Upper portion of this sheet shows the zoning above the operating floor at elevation 76'-5" and the lower portion shows conceptual stick model with respect to configuration of the containment internal structure

Figure 3H.2-1 Lumped Mass Stick Model for R/B-PCCV-Containment Internal Structure (Sheet 3 of 3)

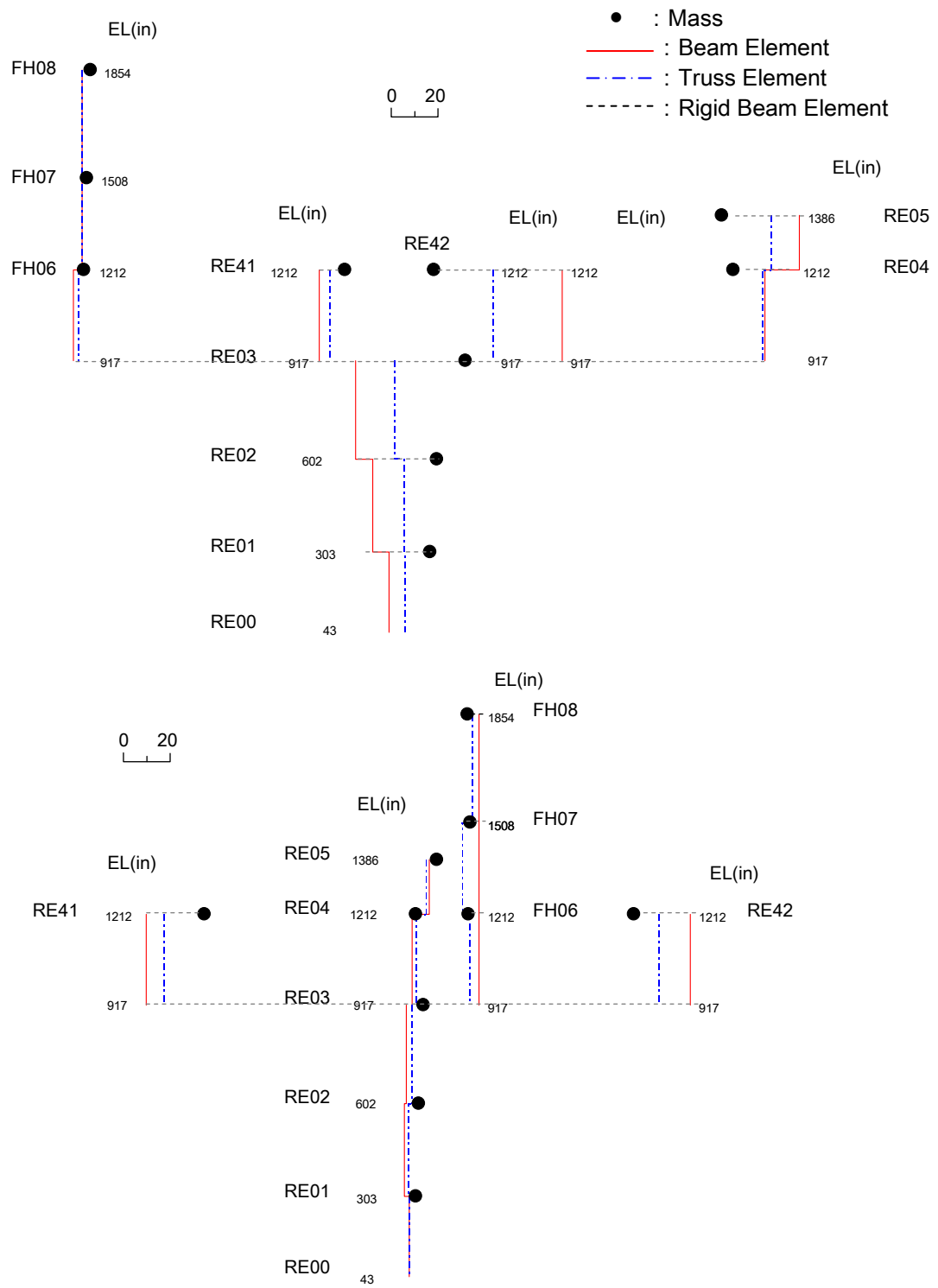

Note: This upper view is a north-south elevation view of the R/B model looking east (XZ plane of global model) with node point elevations given in inches. The lower view is an east-west elevation of the R/B model looking north (YZ plane of global model) with node point elevations given in inches.

Figure 3H.2-2 Elevation Views of Lumped Mass Stick Model (Sheet 1 of 4)

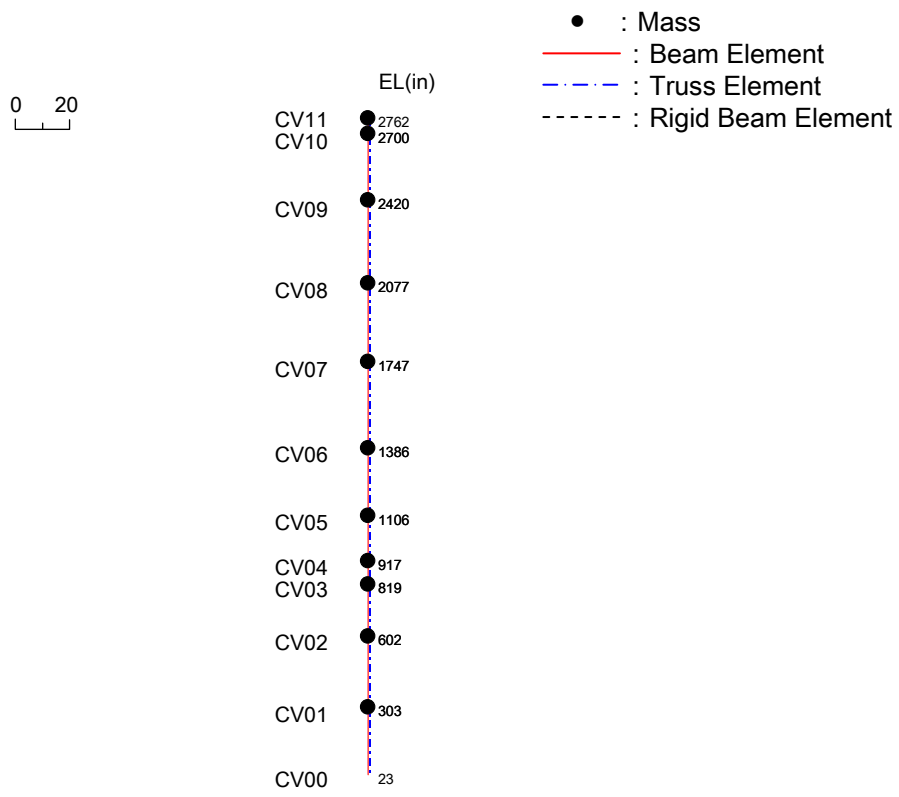

Note: This view is an elevation view of the PCCV model with node point elevations given in inches

Figure 3H.2-2 Elevation Views of Lumped Mass Stick Model (Sheet 2 of 4)

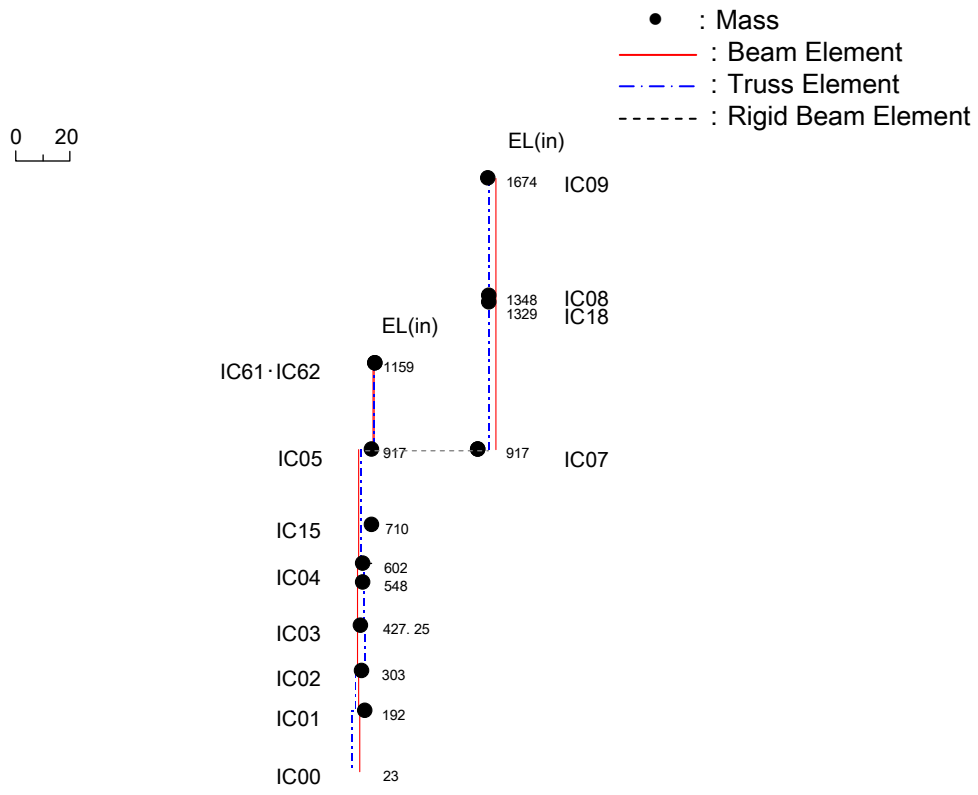

Note: This view is a north-south elevation view looking east at the containment internal structure model with node point elevations given in inches.

Figure 3H.2-2 Elevation Views of Lumped Mass Stick Model (Sheet 3 of 4)

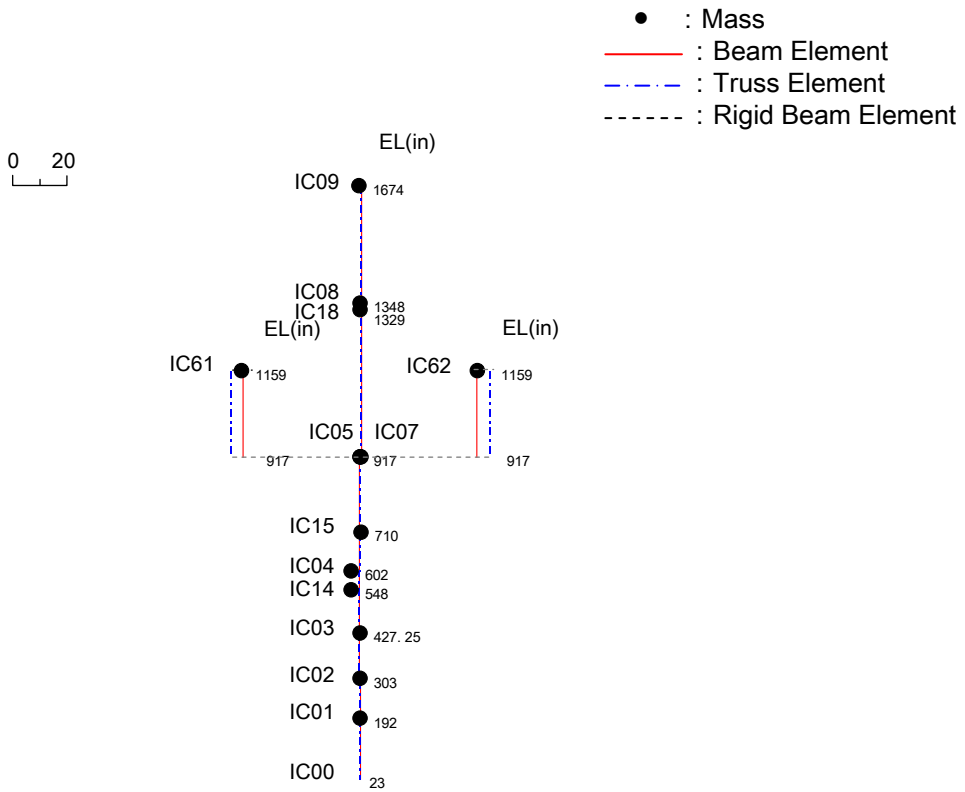

Note: This view is an east-west elevation view of the containment internal structure model with node point elevations given in inches.

Figure 3H.2-2 Elevation Views of Lumped Mass Stick Model (Sheet 4 of 4)

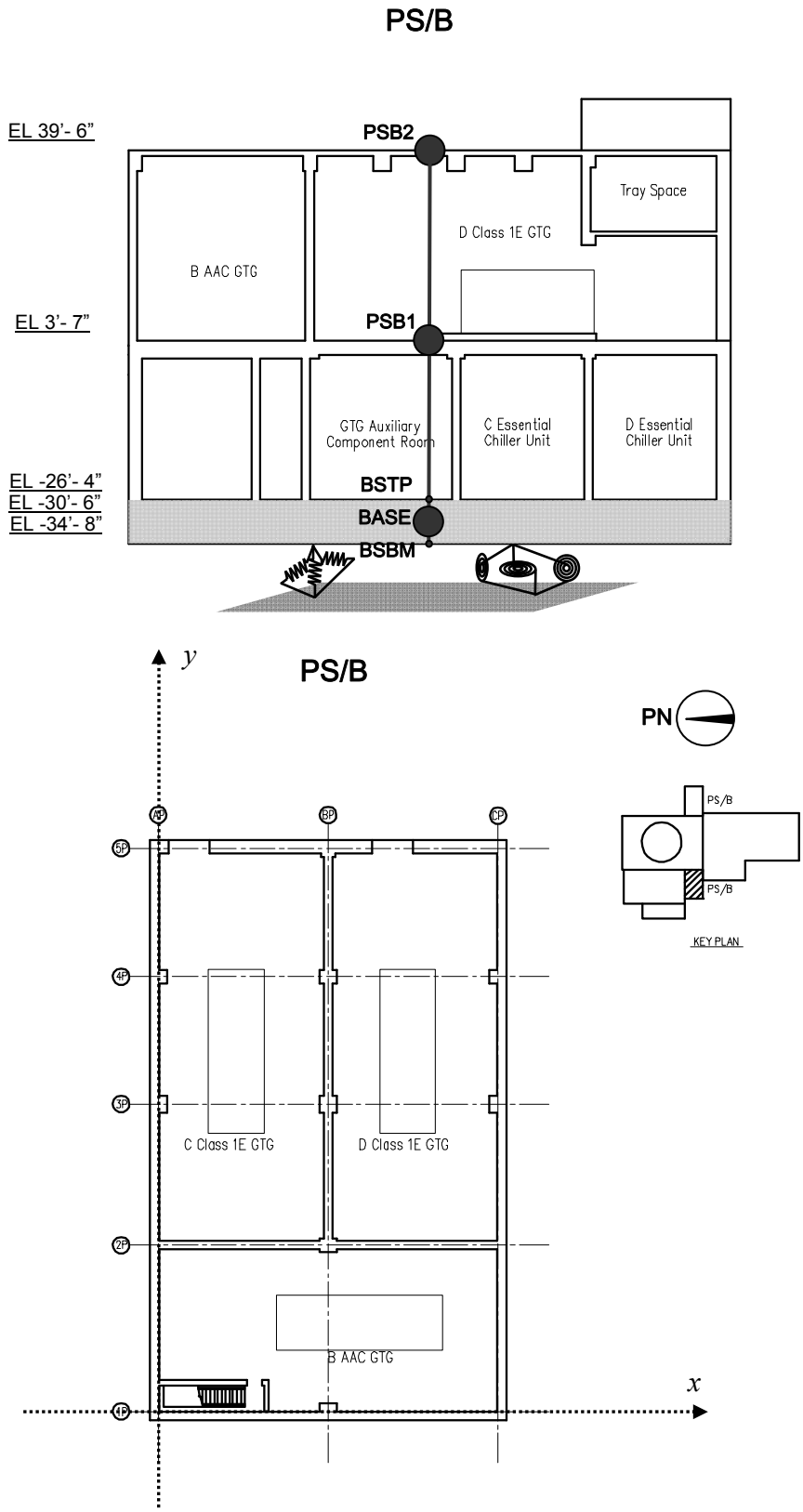

Figure 3H.2-3 Lumped Mass Stick Model for PS/B

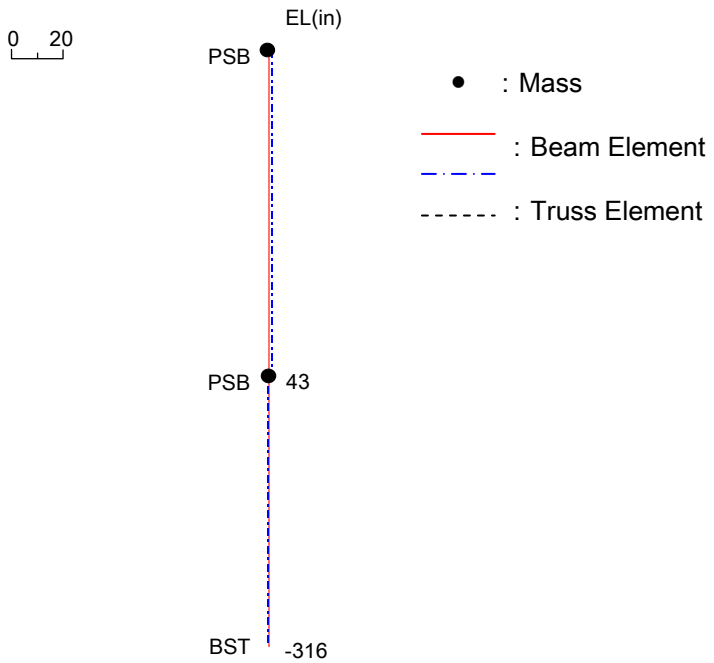

(NS Direction)

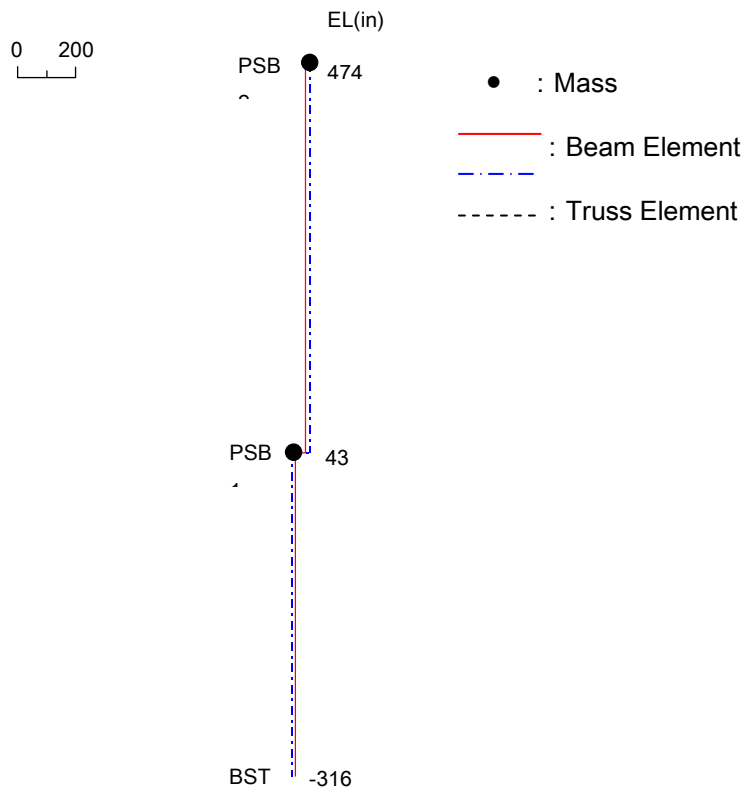

(EW Direction)

Figure 3H.2-4 Elevation Views of PS/Bs Lumped Mass Stick Model

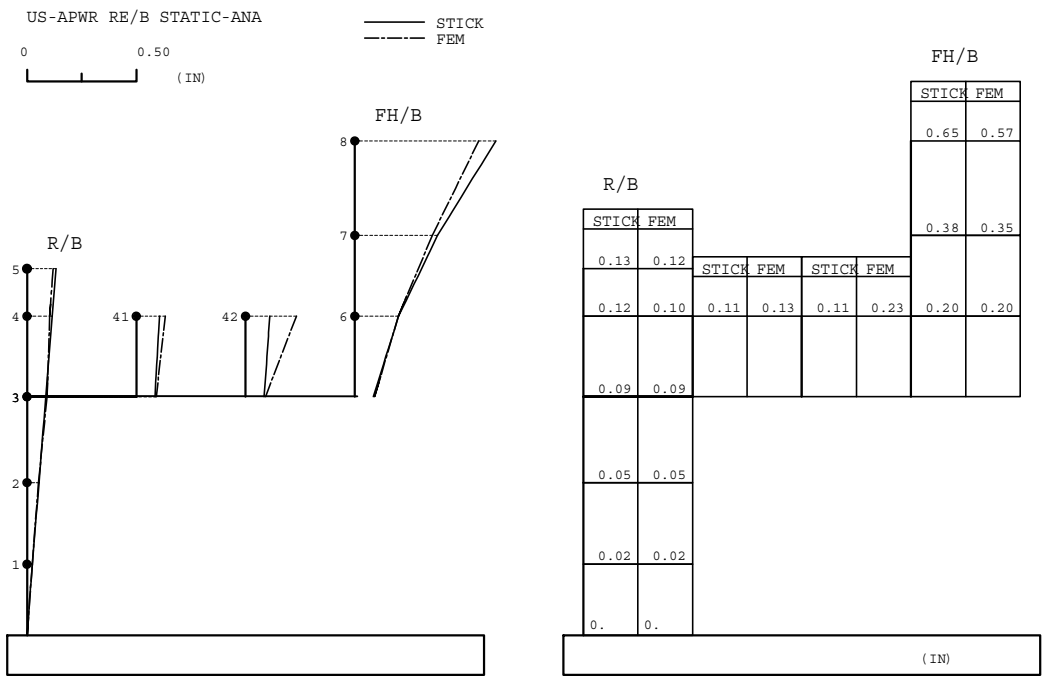

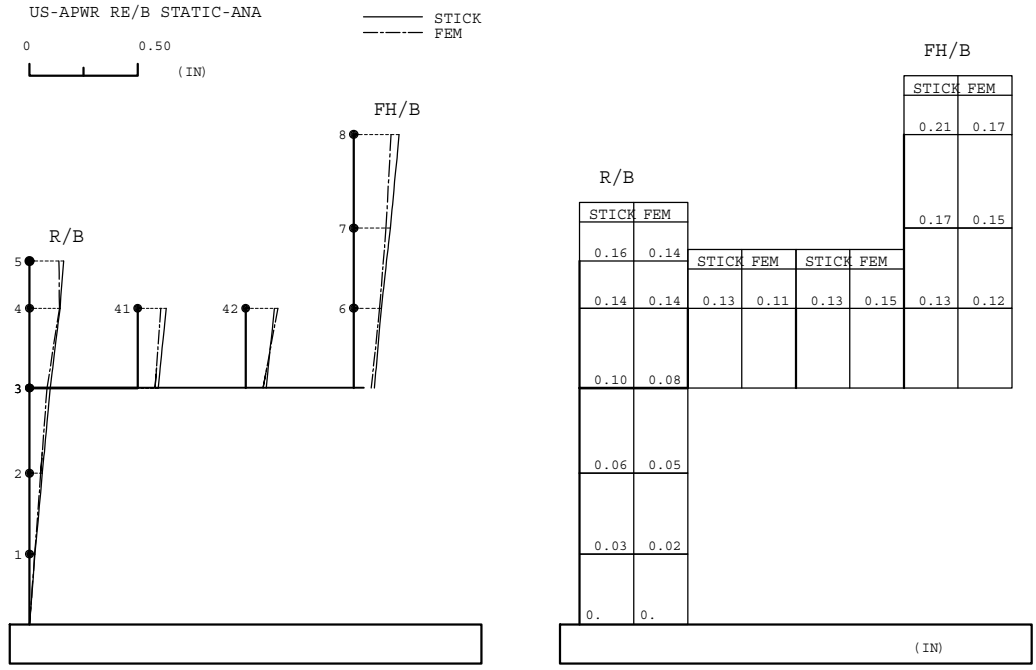

Note: The upper figure is for the NS direction; the lower figure is for the EW direction.

Figure 3H.3-1 Comparison of Static Deformation for R/B Three Dimensional Stick and FE Models

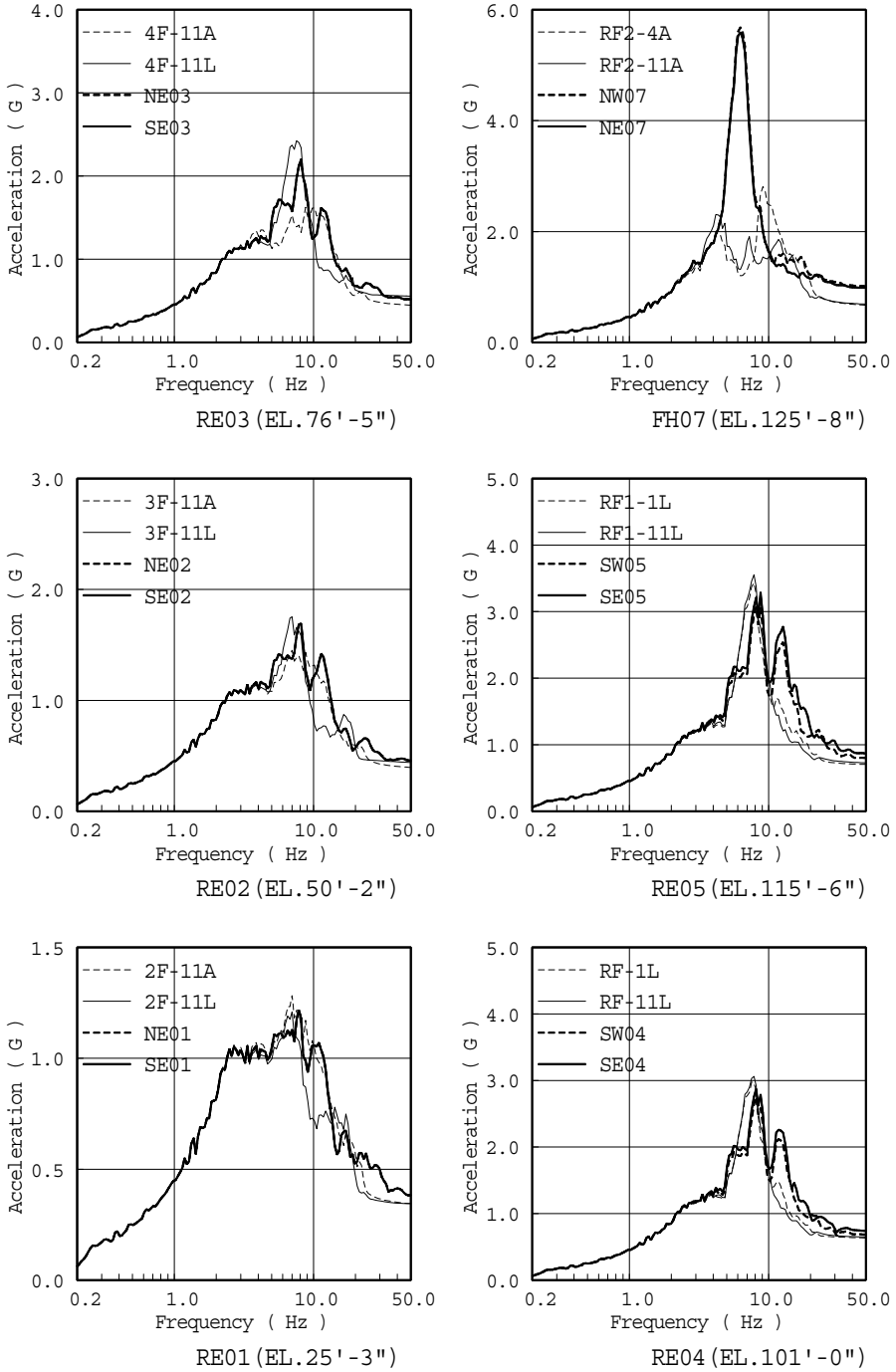

Note: Comparisons are at 5% damping for various points and various elevations for the NS direction. See next sheet for EW direction. Thick full and dotted lines are for three dimensional stick model, and thin lines are for FE model.

Figure 3H.3-2 Comparison of ISRS for R/B Three Dimensional Stick and FE Models (Sheet 1 of 2)

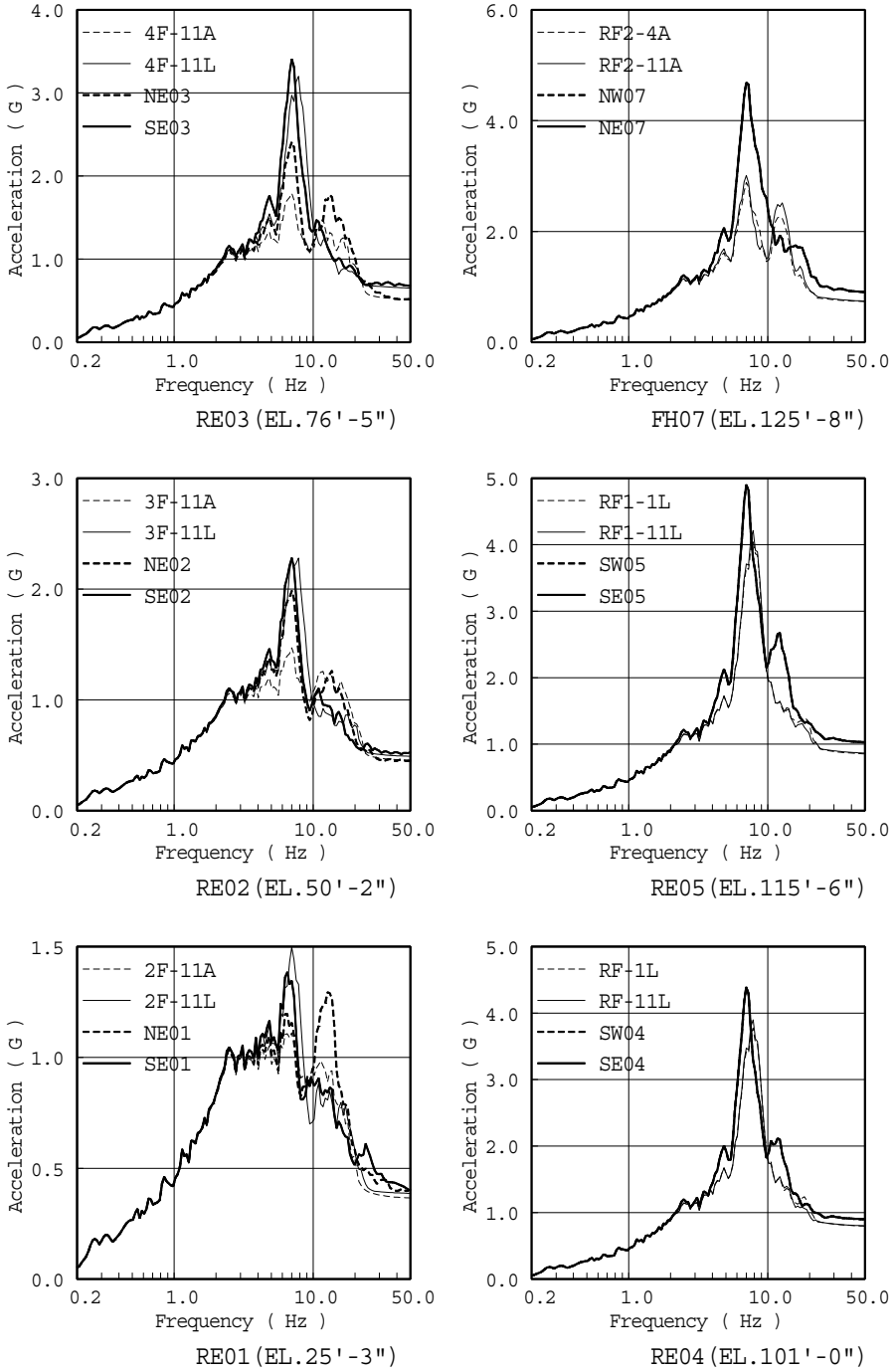

Note: Comparisons are at 5% damping for various points and various elevations for the EW direction. Thick full and dotted lines are for three dimensional stick model, and thin lines are for FE model.

Figure 3H.3-2 Comparison of ISRS for R/B Three Dimensional Stick and FE Models (Sheet 2 of 2)

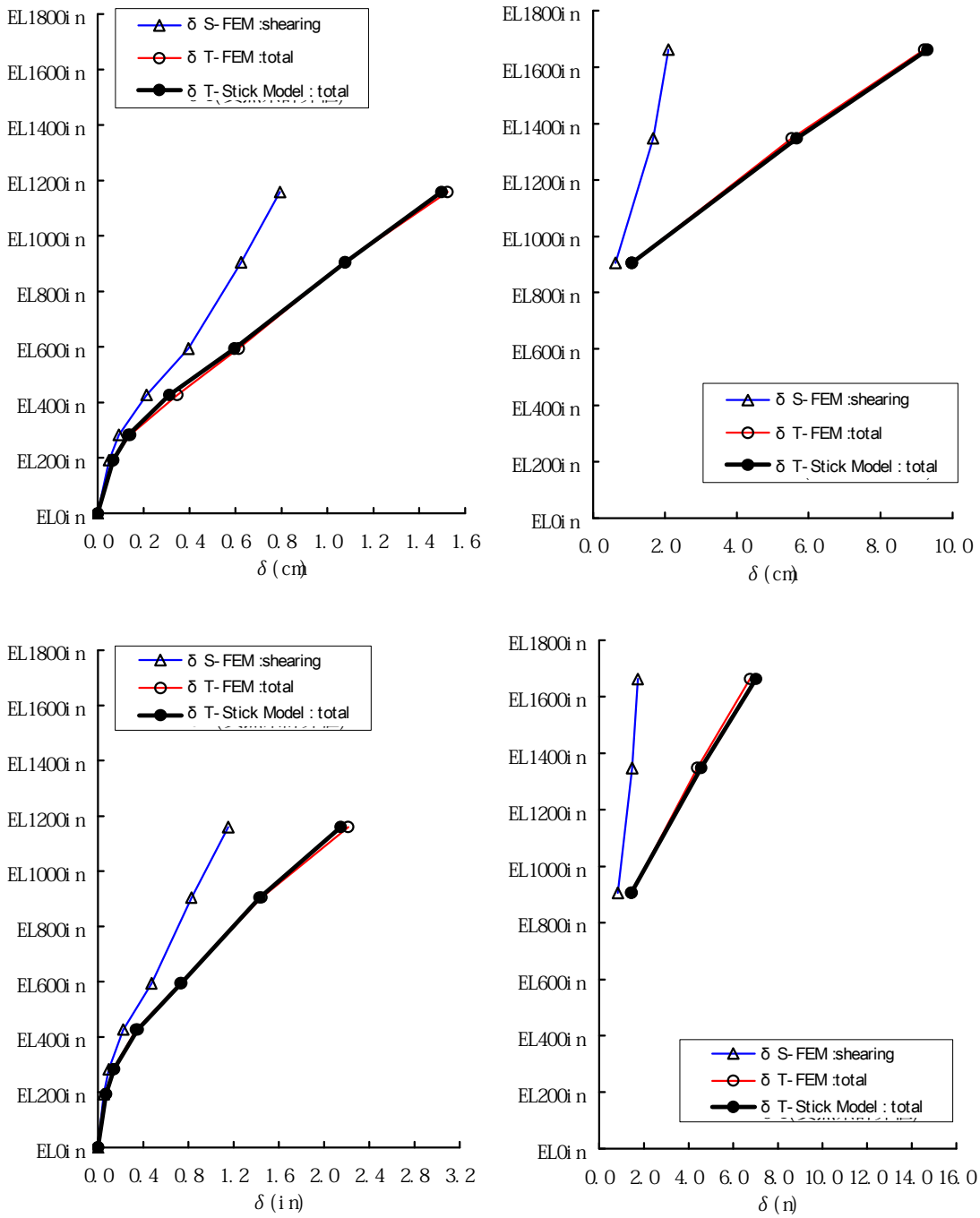

Note: Upper figures compare three dimensional stick model to FE model for CIS, NS direction; lower figures compare containment internal structure for EW direction.

Figure 3H.3-3 Comparison of Static Deformation for Containment Internal Structure Three Dimensional Stick and FE Models

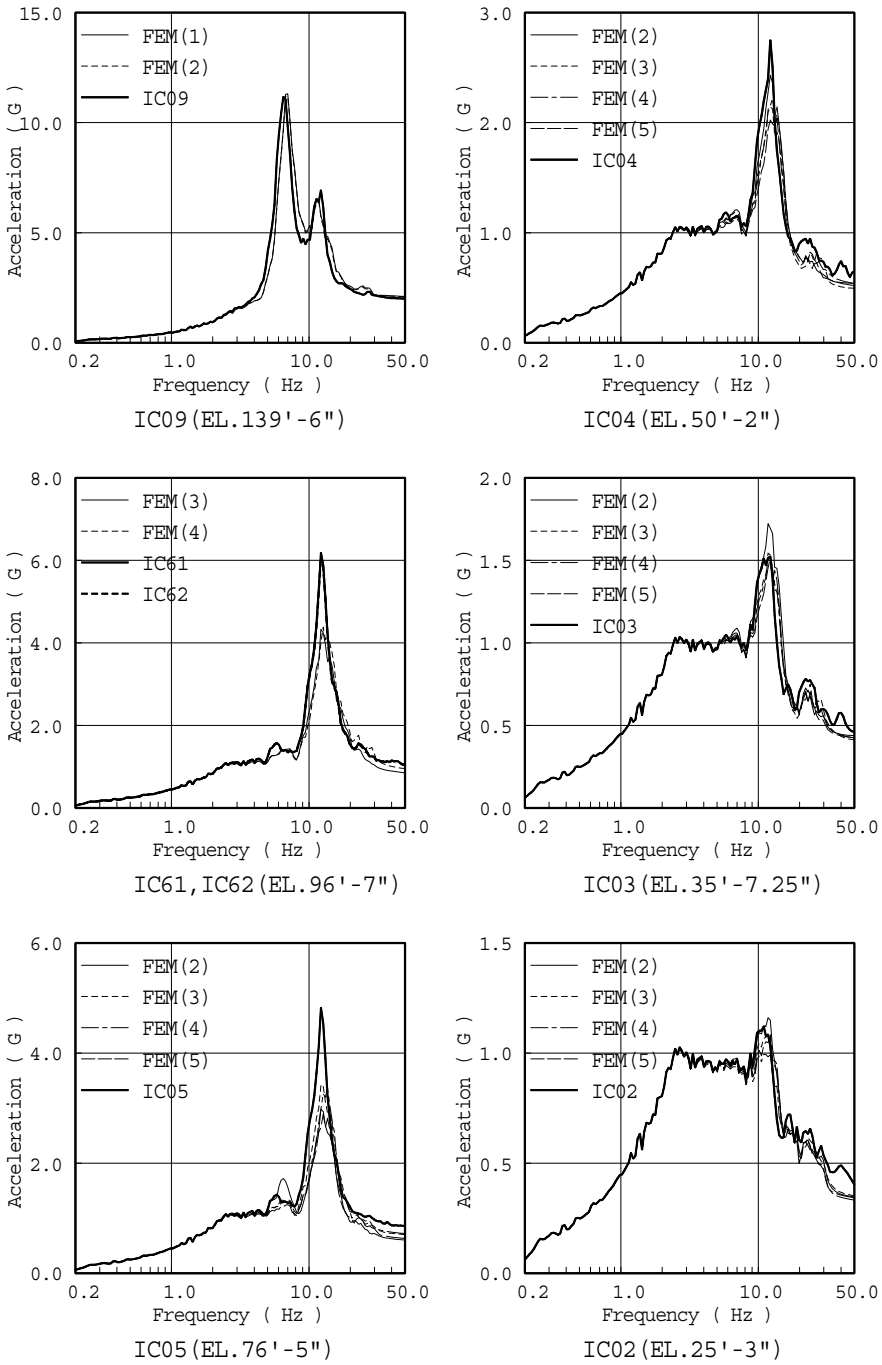

Acc.SP. (NS) FEM & S-R 3D

Note: Comparisons are at 5% damping for various points and various elevations for the NS direction. See next sheet for EW direction. Thick full lines are for three dimensional stick model, and thin lines are for the FE model.

Figure 3H.3-4 Comparison of ISRS for Containment Internal Structure Three Dimensional Stick and FE Models (Sheet 1 of 2)

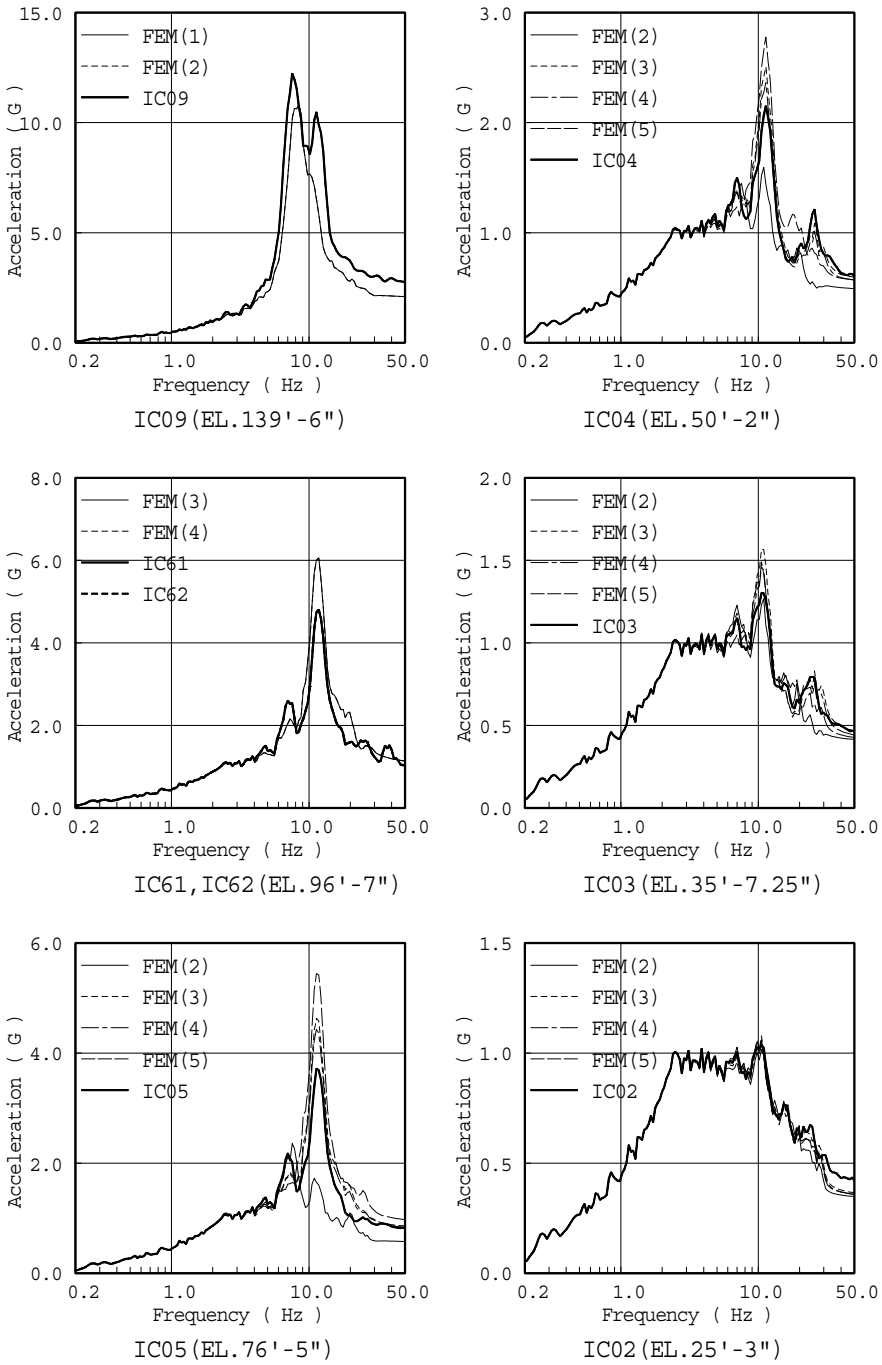

Acc.SP. (EW) FEM & S-R 3D

Note: Comparisons are at 5% damping for various points and various elevations for the EW direction. Thick full lines are for three dimensional stick model, and thin lines are for the FE model.

Figure 3H.3-4 Comparison of ISRS for Containment Internal Structure Three Dimensional Stick and FE Models (Sheet 2 of 2)

APPENDIX 3I

IN-STRUCTURE RESPONSE SPECTRA

CONTENTS

Page

3I In-Structure Response Spectra

3I.1 Introduction 3I-1

FIGURES

Figure 3I-1 ISRS of PCCV (NS - Direction) 3I-2

Figure 3I-2 ISRS of PCCV (EW - Direction) 3I-33

Figure 3I-3 ISRS of PCCV (Vertical - Direction) 3I-64

ACRONYMS AND ABBREVIATIONS

ISRS	in-structure response spectra
PCCV	prestressed concrete containment vessel
R/B	reactor building

3I. In-Structure Response Spectra

3I.1 Introduction

This appendix provides in-structure response spectra for various buildings and elevations of the US-APWR.

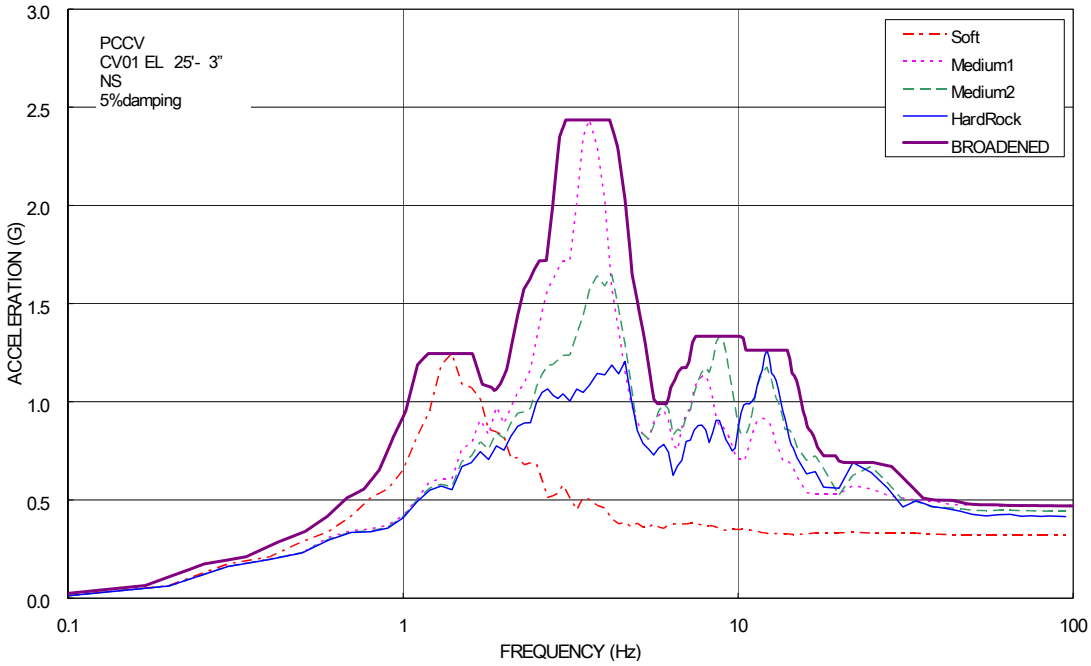

Figure 3I-1 In-structure Response Spectra (ISRS) of Prestressed Concrete Containment Vessel (PCCV) (NS - Direction)

(Sheet 1 of 31)

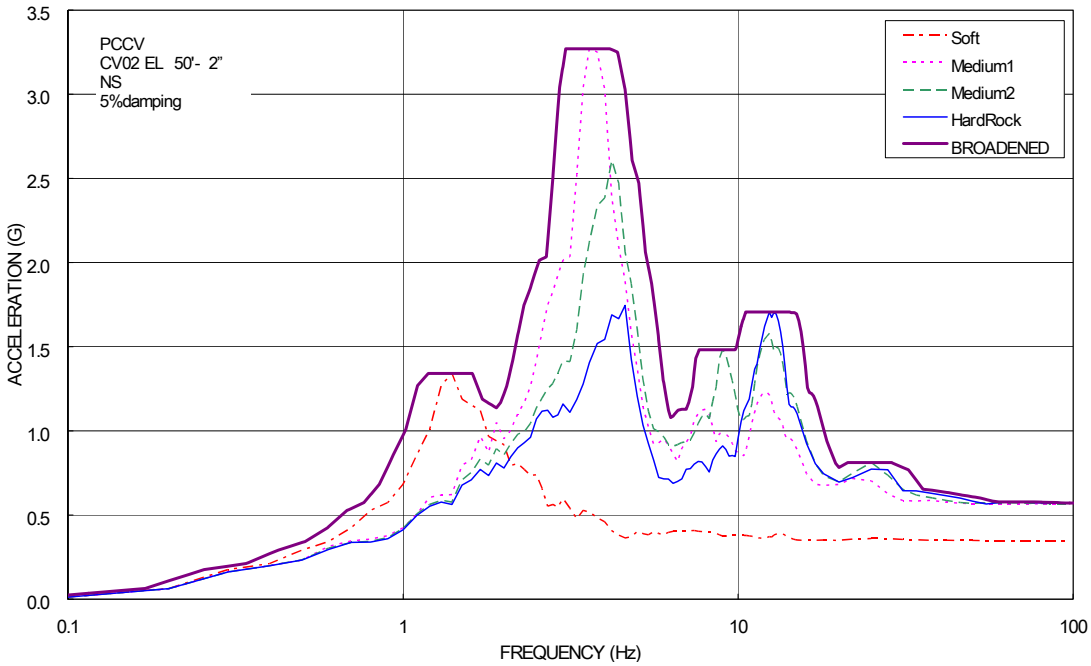

Figure 3I-1 ISRS of PCCV (NS - Direction)

(Sheet 2 of 31)

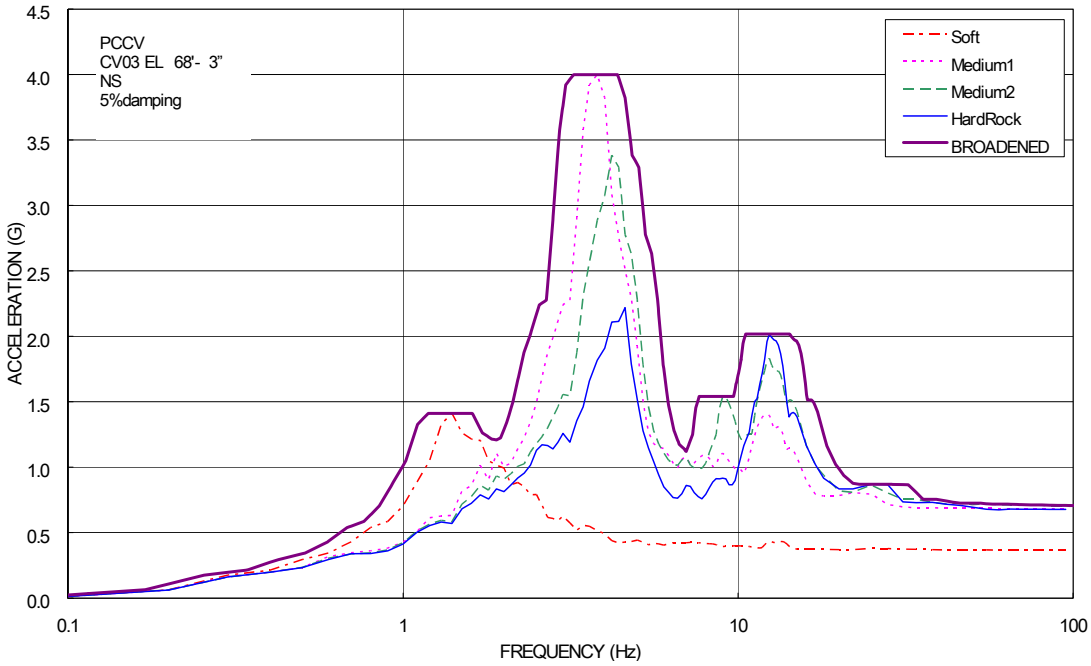

Figure 3I-1 ISRS of PCCV (NS - Direction)

(Sheet 3 of 31)

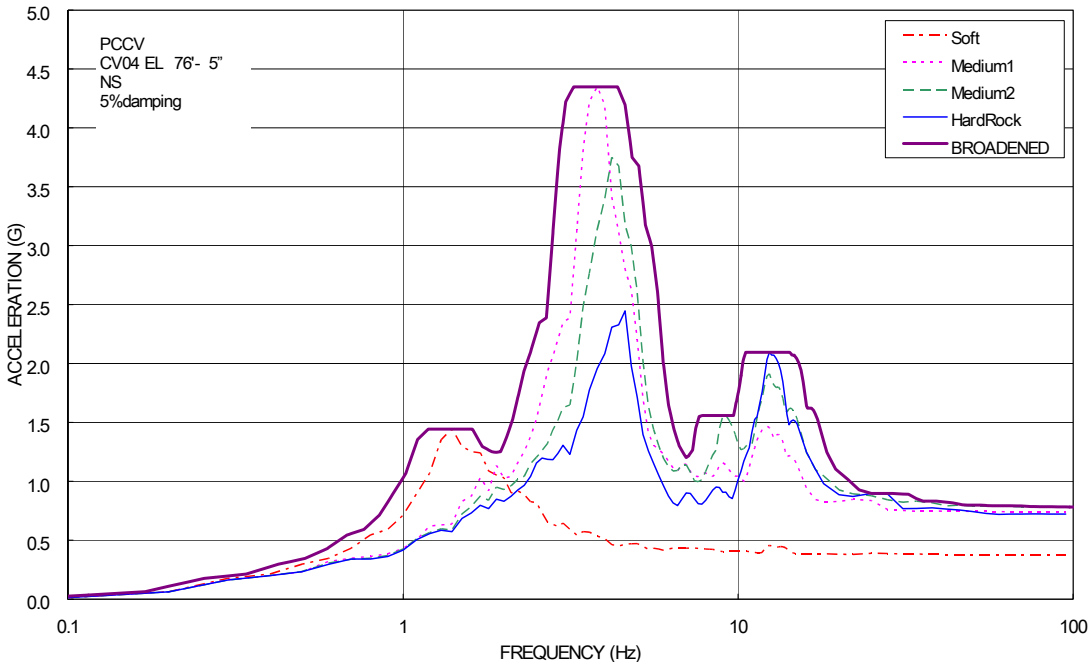

Figure 3I-1 ISRS of PCCV (NS - Direction)

(Sheet 4 of 31)

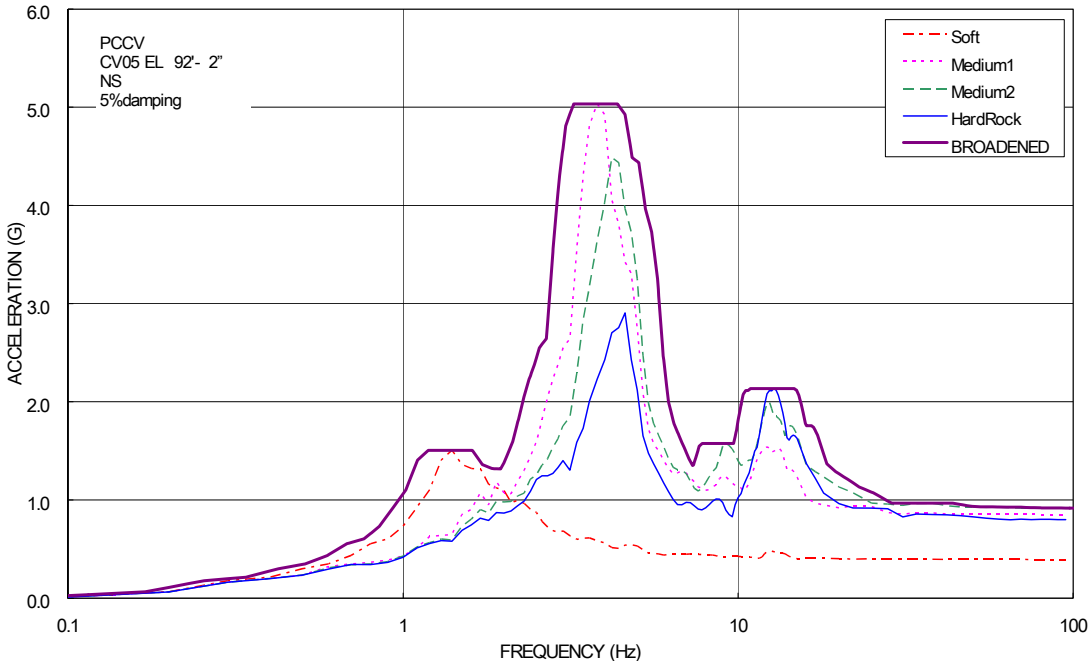

Figure 3I-1 ISRS of PCCV (NS - Direction)

(Sheet 5 of 31)

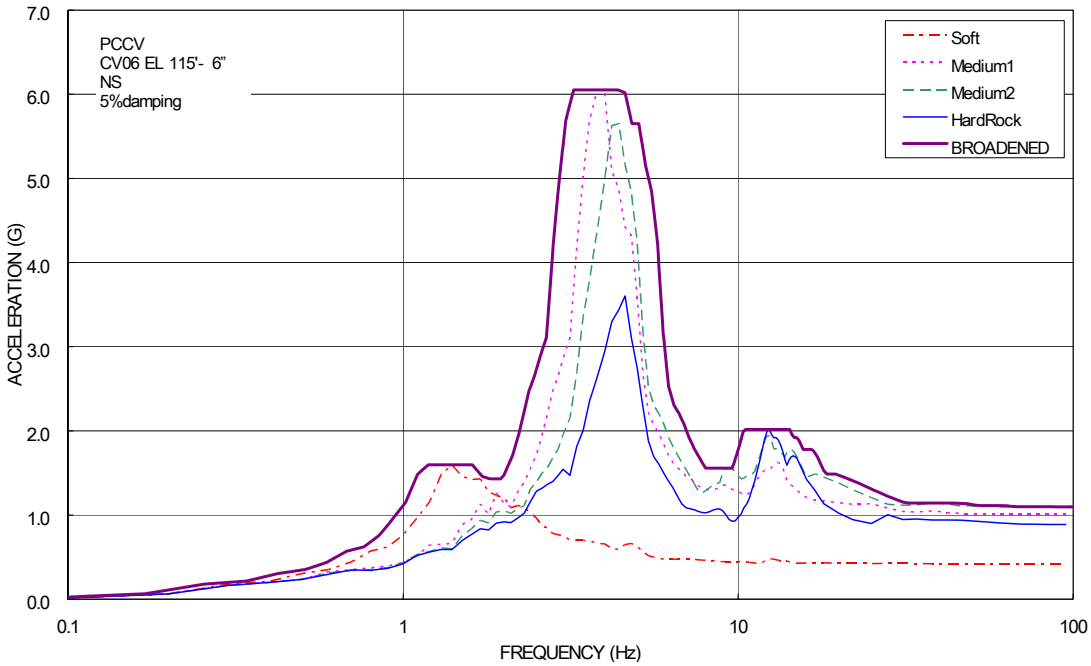

Figure 3I-1 ISRS of PCCV (NS - Direction)

(Sheet 6 of 31)

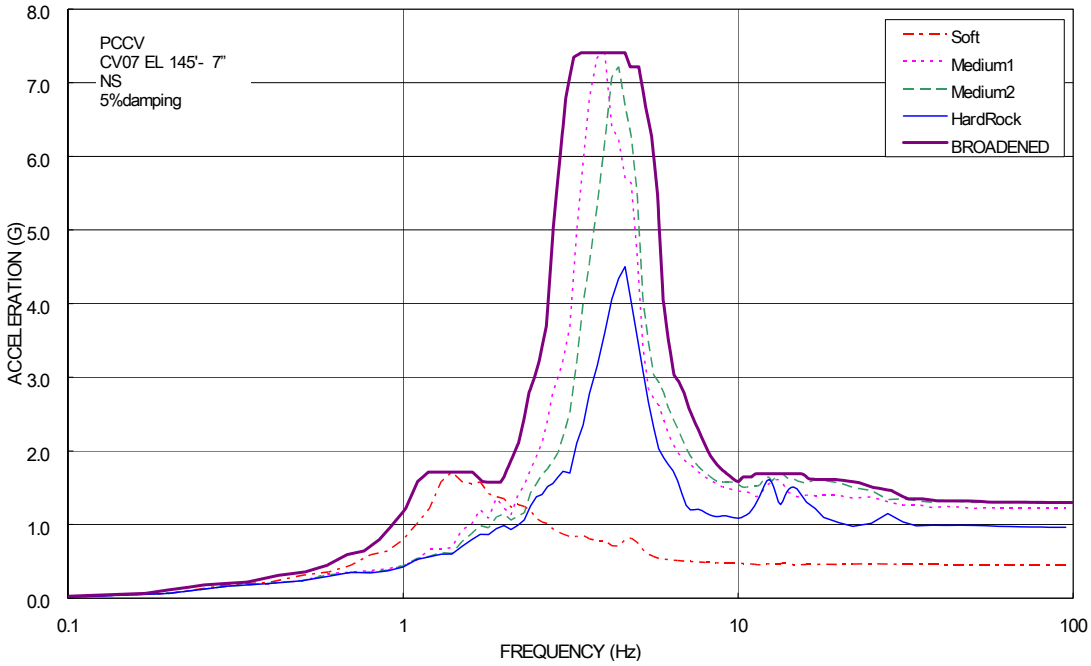

Figure 3I-1 ISRS of PCCV (NS - Direction)

(Sheet 7 of 31)

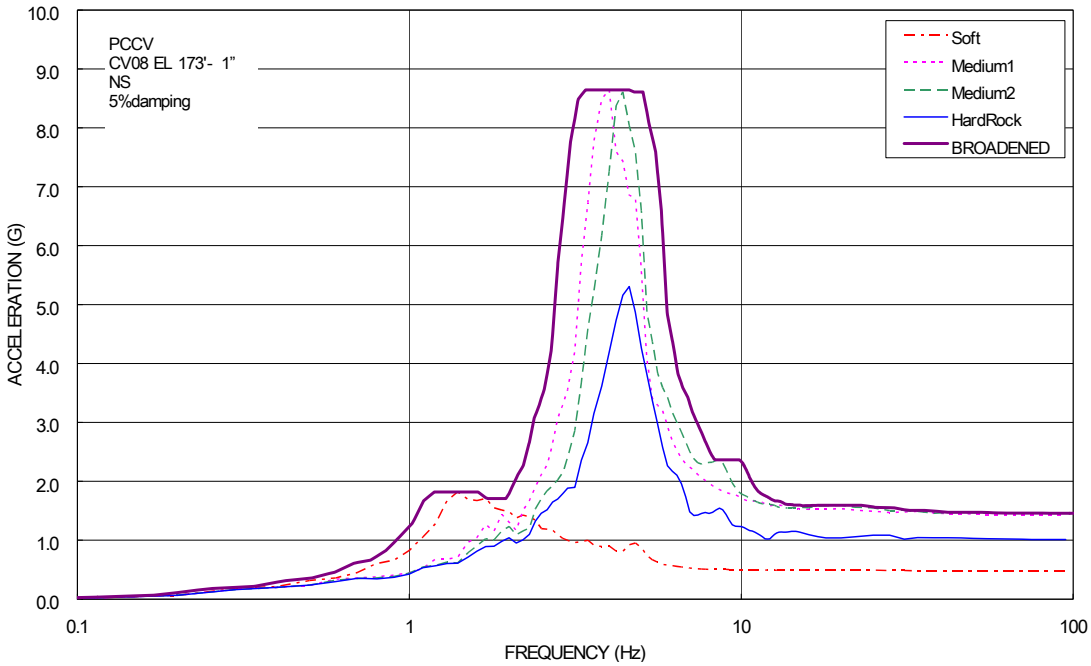

Figure 3I-1 ISRS of PCCV (NS - Direction)

(Sheet 8 of 31)

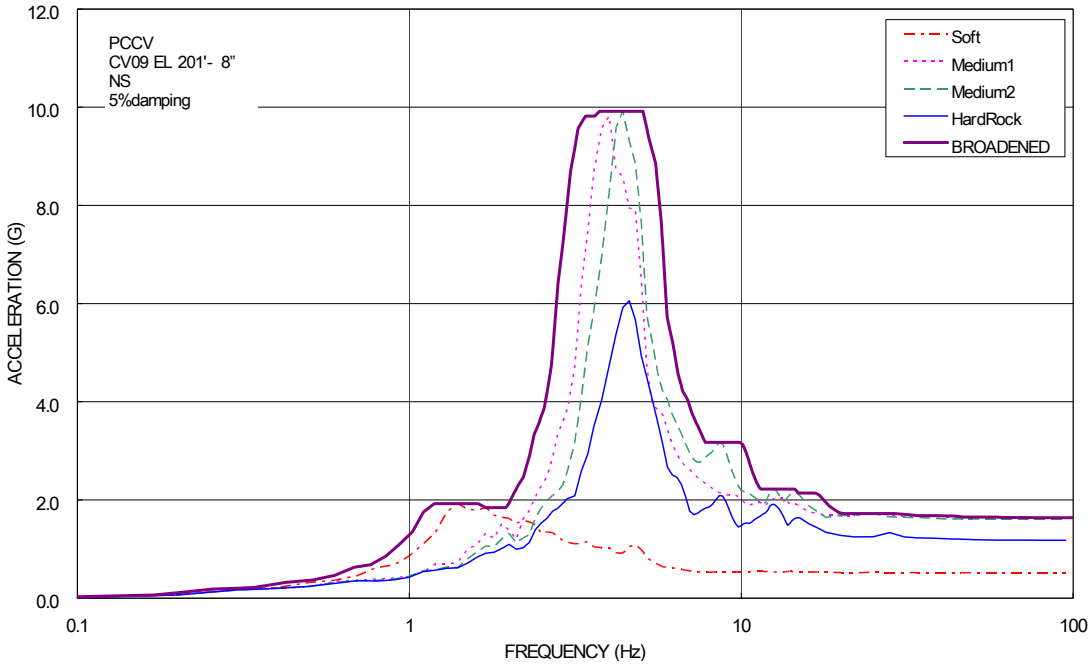

Figure 3I-1 ISRS of PCCV (NS - Direction)

(Sheet 9 of 31)

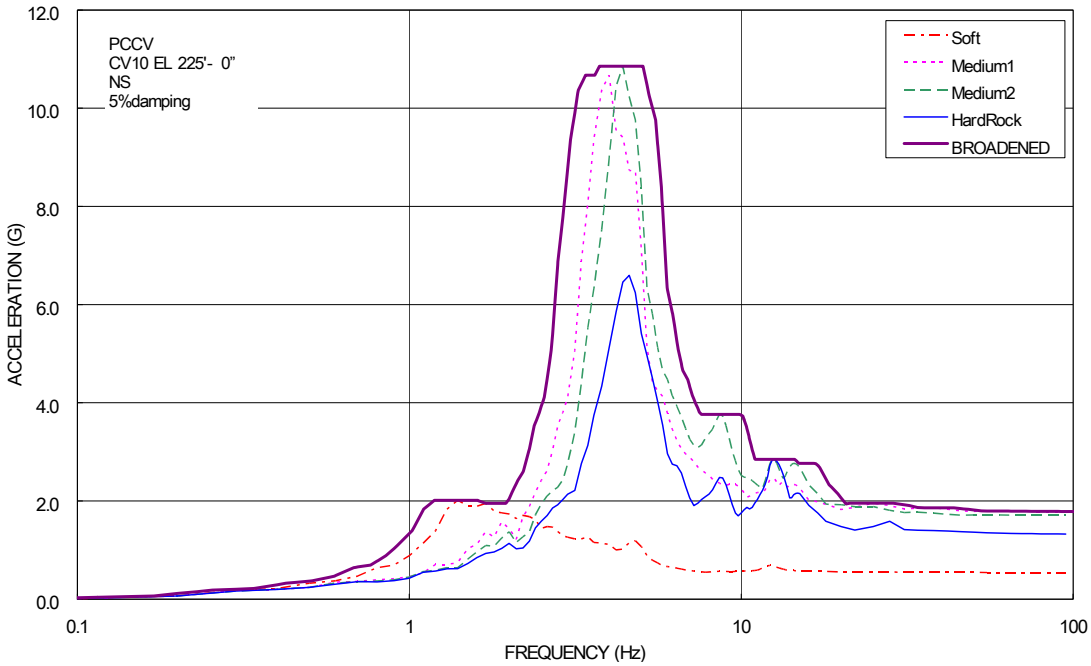

Figure 3I-1 ISRS of PCCV (NS - Direction)

(Sheet 10 of 31)

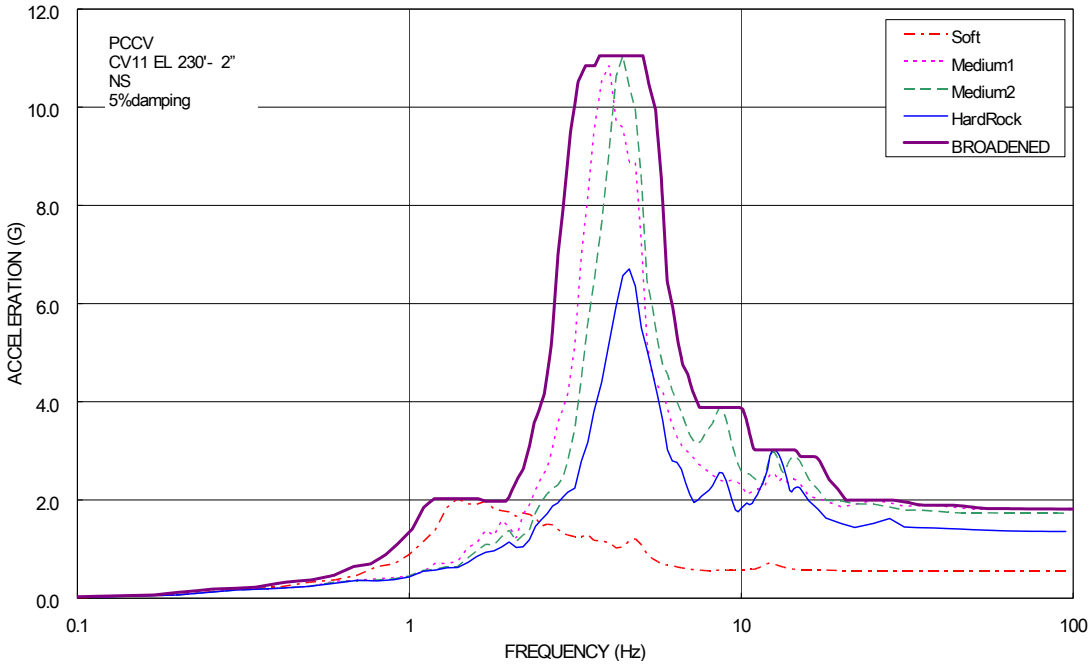

Figure 3I-1 ISRS of PCCV (NS - Direction)

(Sheet 11 of 31)

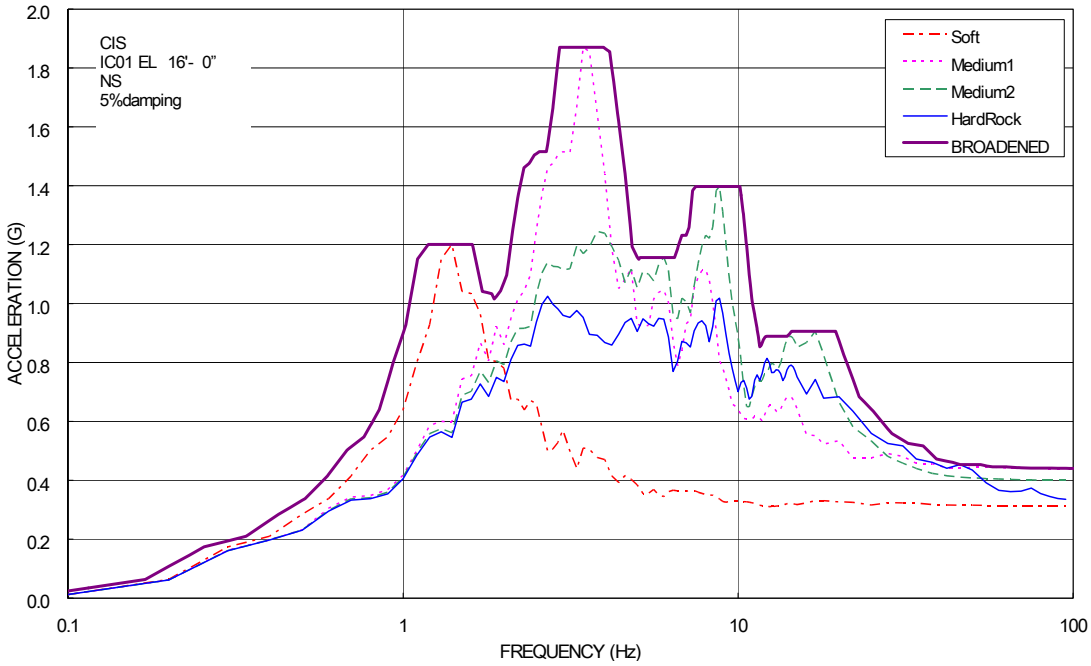

Figure 3I-1 ISRS of Containment Internal Structure (NS - Direction)

(Sheet 12 of 31)

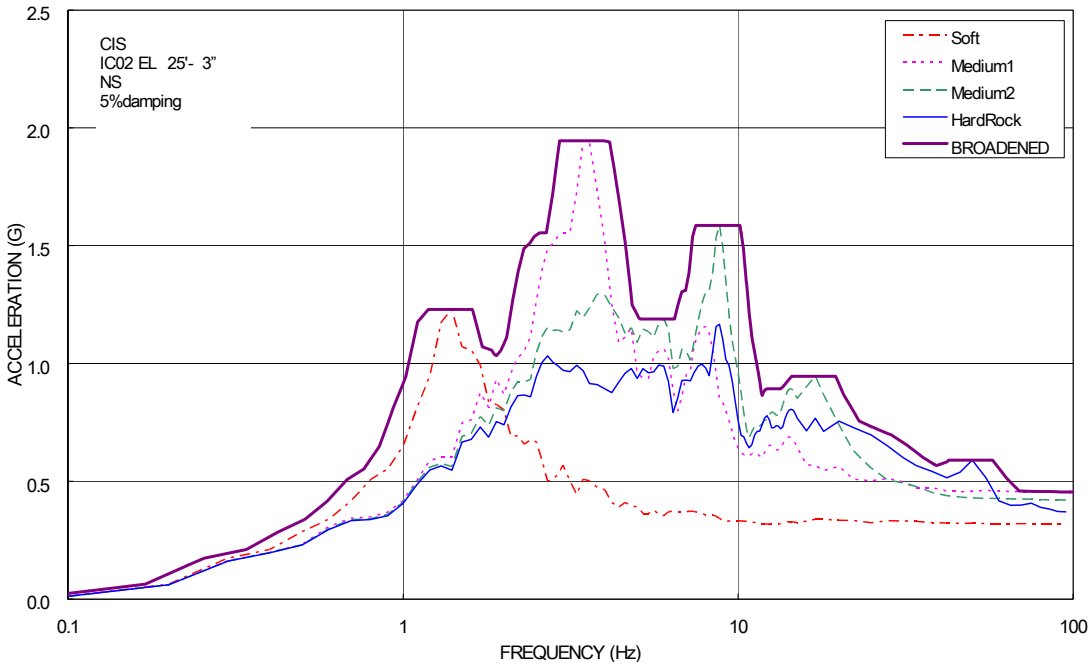

Figure 3I-1 ISRS of Containment Internal Structure (NS - Direction)

(Sheet 13 of 31)

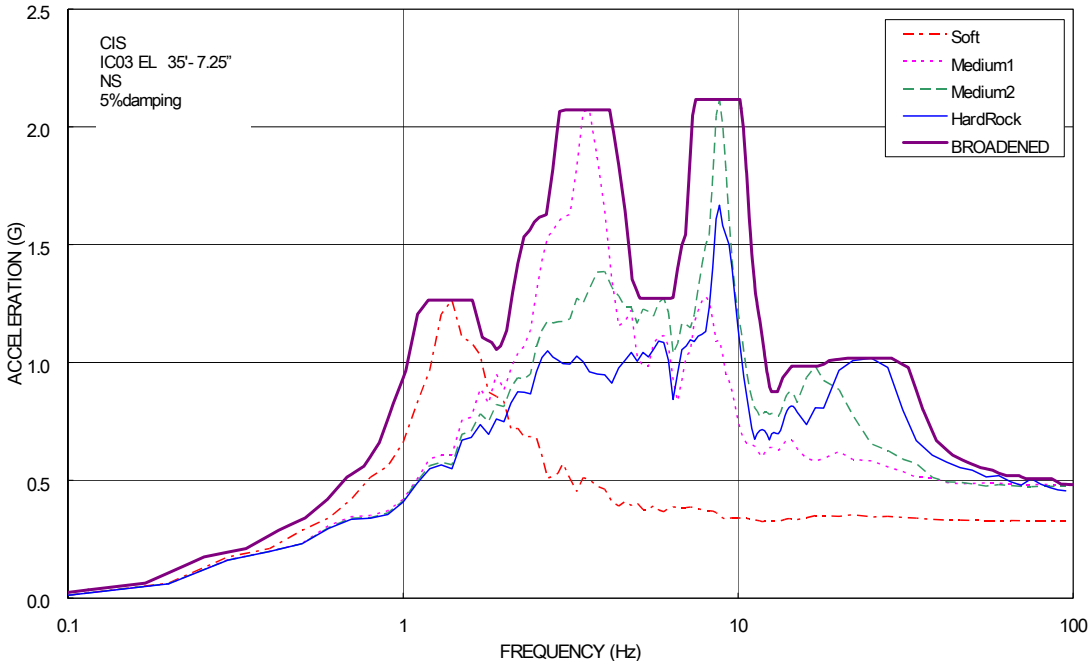

Figure 3I-1 ISRS of Containment Internal Structure (NS - Direction)

(Sheet 14 of 31)

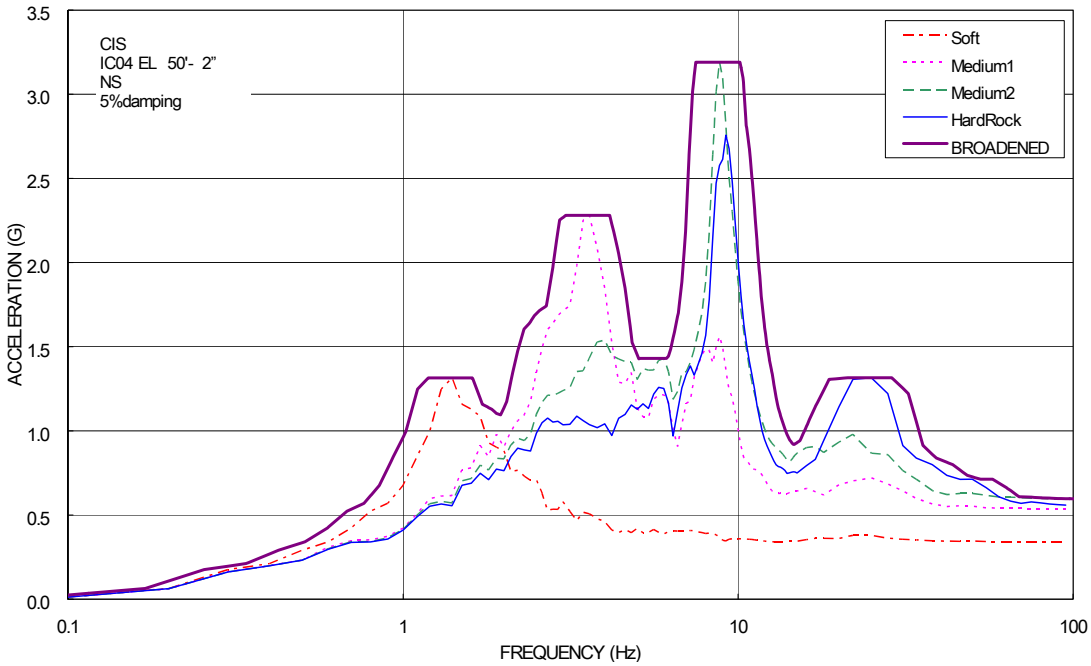

Figure 3I-1 ISRS of Containment Internal Structure (NS - Direction)

(Sheet 15 of 31)

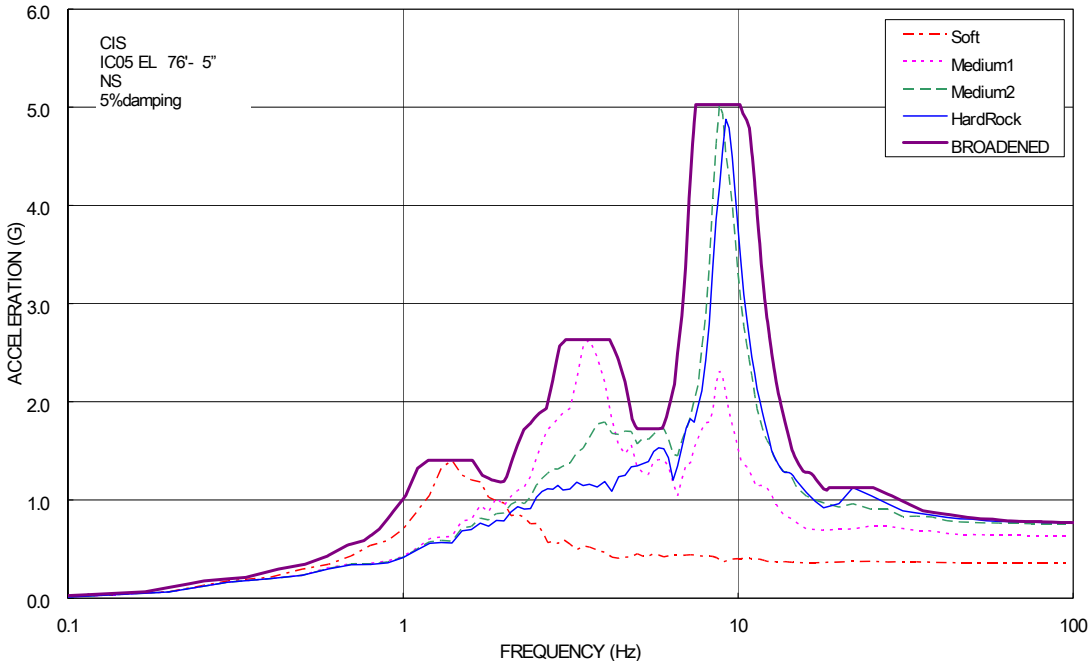

Figure 3I-1 ISRS of Containment Internal Structure (NS - Direction)

(Sheet 16 of 31)

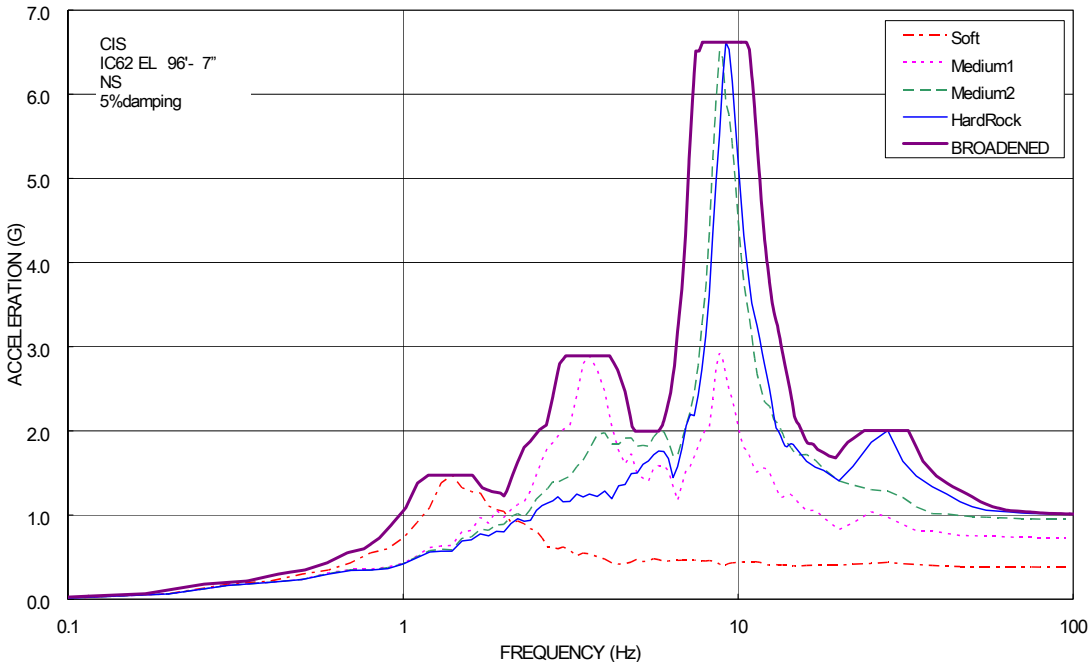

Figure 3I-1 ISRS of Containment Internal Structure (NS - Direction)

(Sheet 17 of 31)

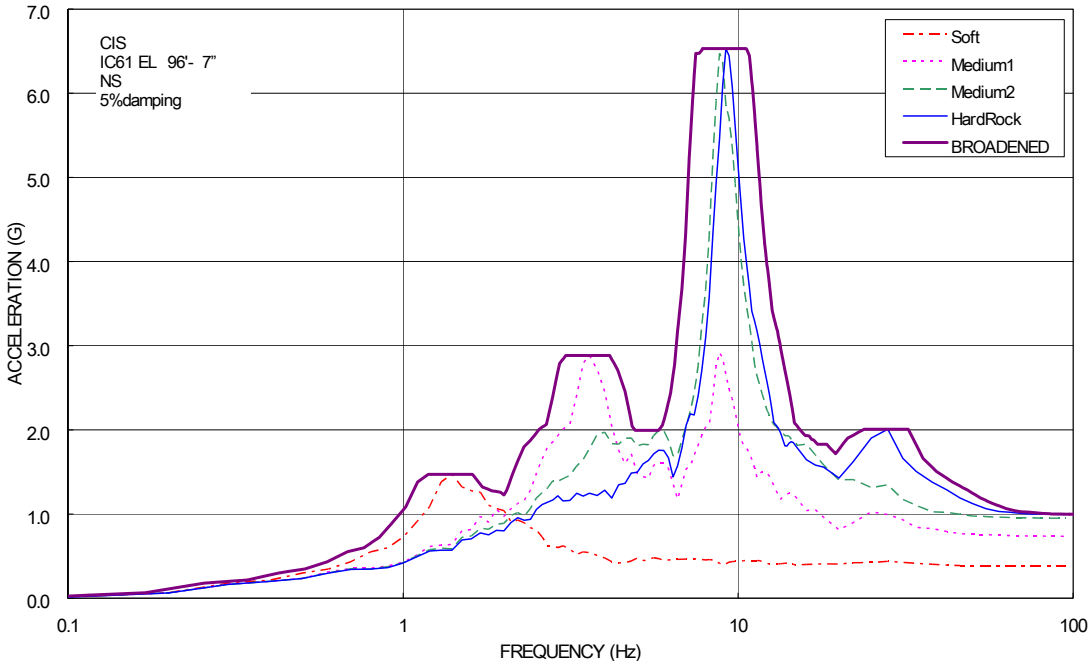

Figure 3I-1 ISRS of Containment Internal Structure (NS - Direction)

(Sheet 18 of 31)

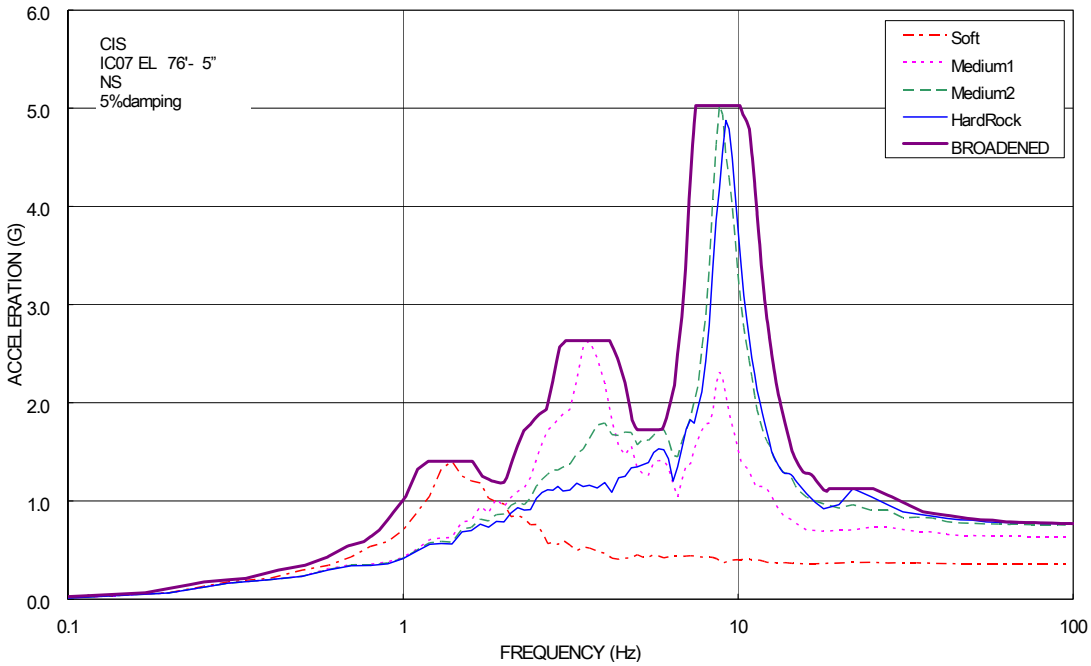

Figure 3I-1 ISRS of Containment Internal Structure (NS - Direction)

(Sheet 19 of 31)

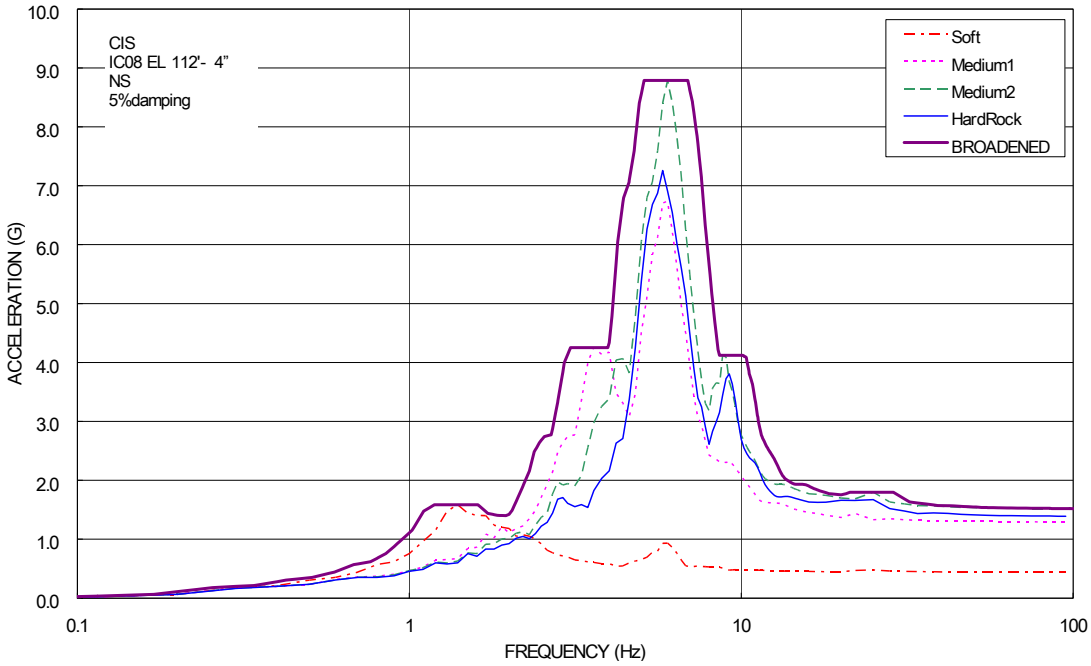

Figure 3I-1 ISRS of Containment Internal Structure (NS - Direction)

(Sheet 20 of 31)

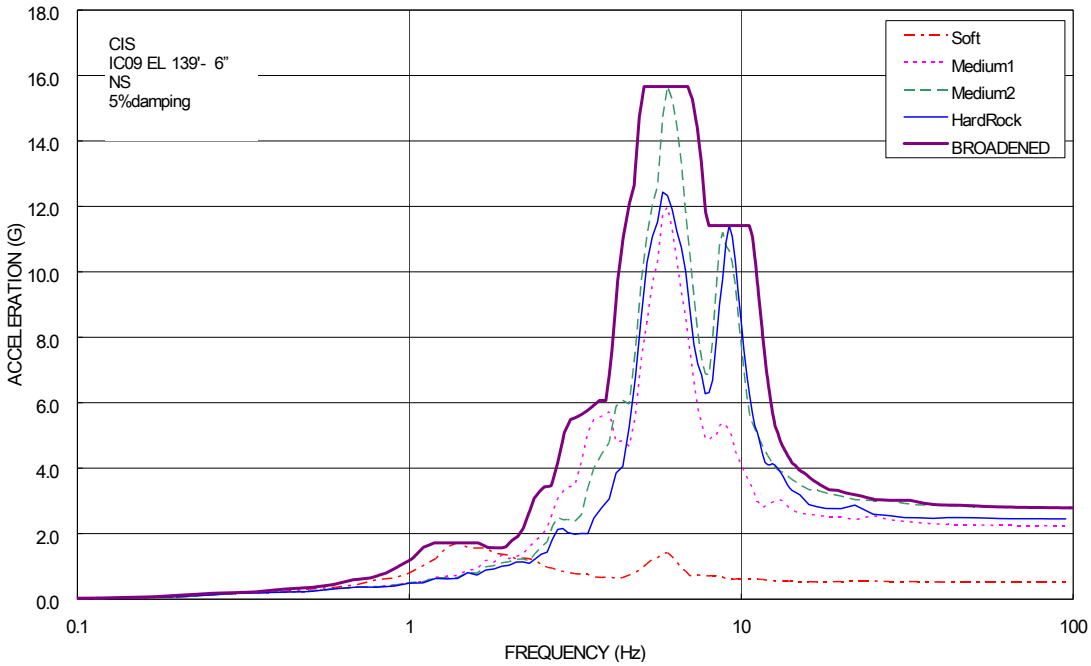

Figure 3I-1 ISRS of Containment Internal Structure (NS - Direction)

(Sheet 21 of 31)

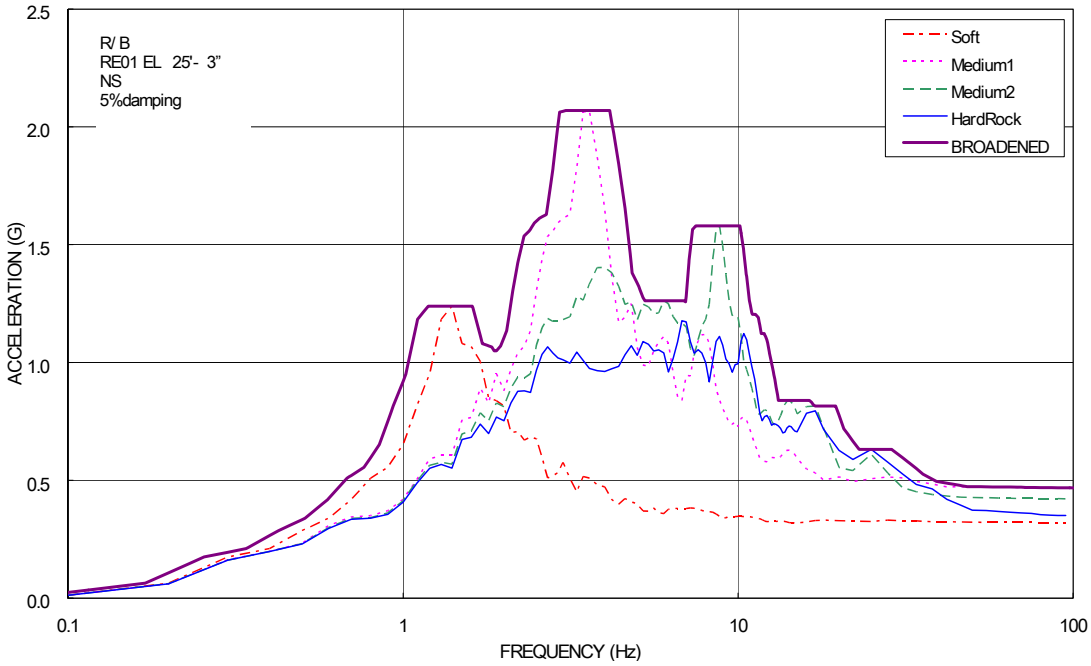

Figure 3I-1 ISRS of Reactor Building (R/B) (NS - Direction)

(Sheet 22 of 31)

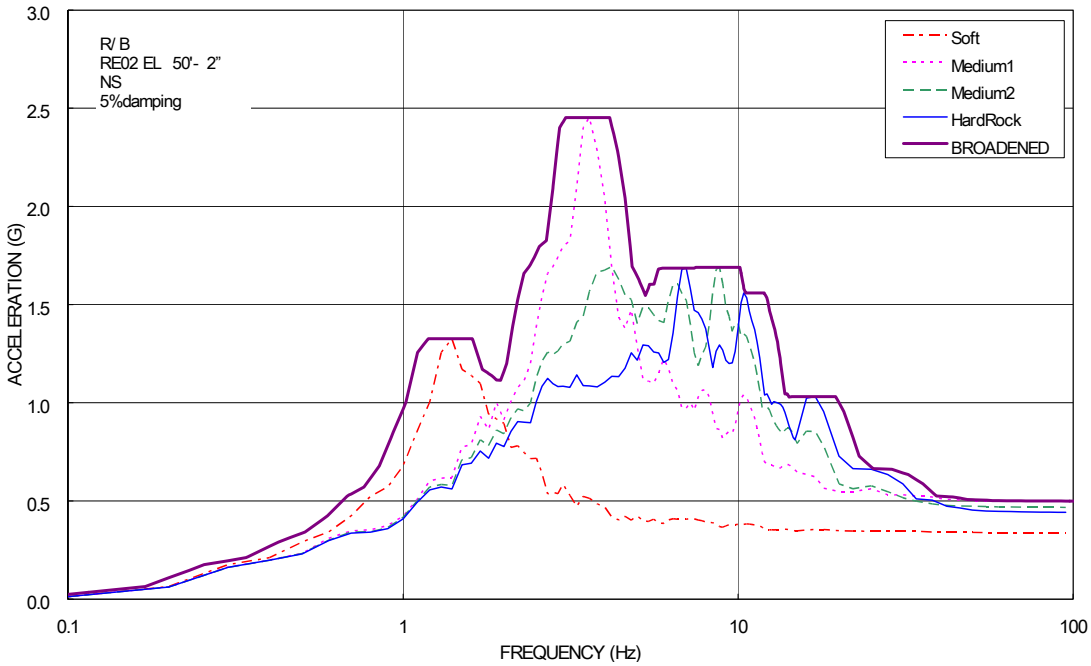

Figure 3I-1 ISRS of R/B (NS - Direction)

(Sheet 23 of 31)

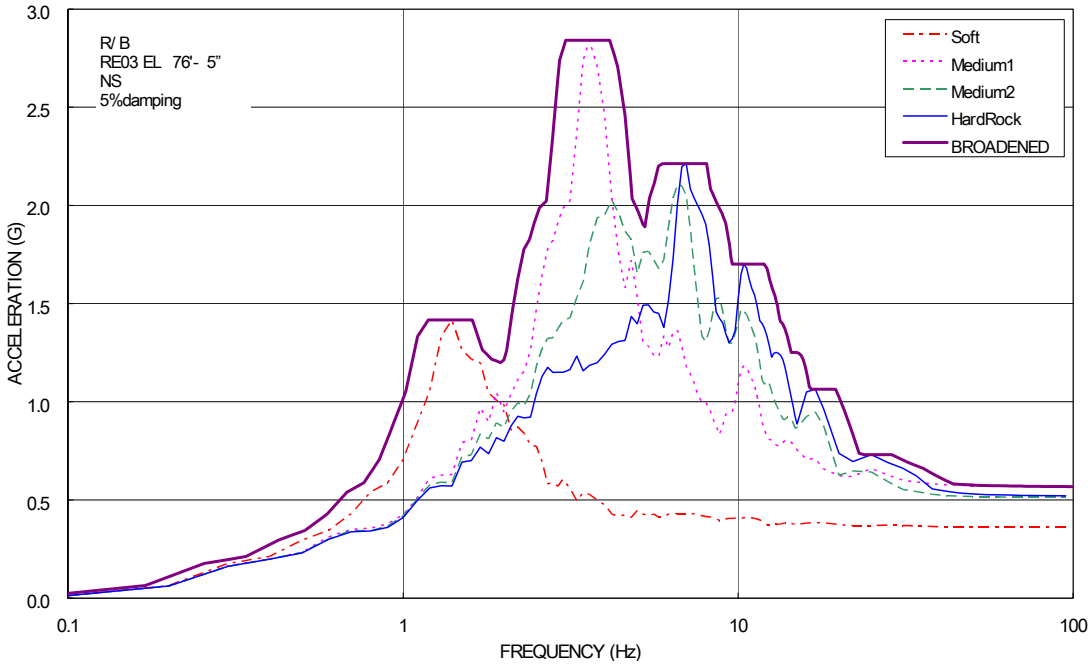

Figure 3I-1 ISRS of R/B (NS - Direction)

(Sheet 24 of 31)

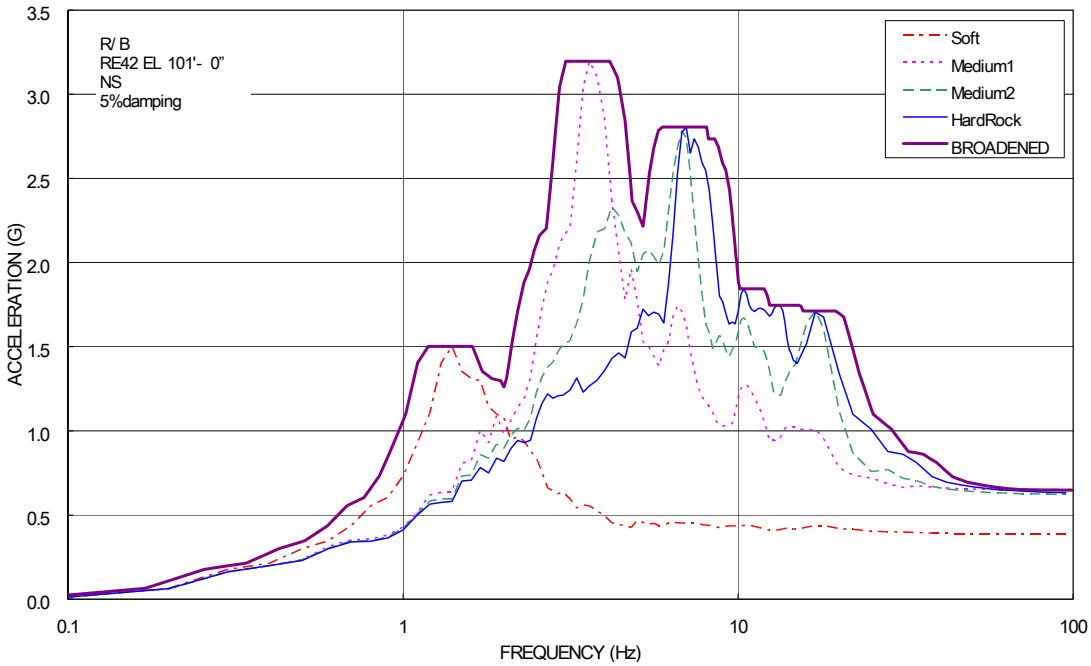

Figure 3I-1 ISRS of R/B (NS - Direction)

(Sheet 25 of 31)

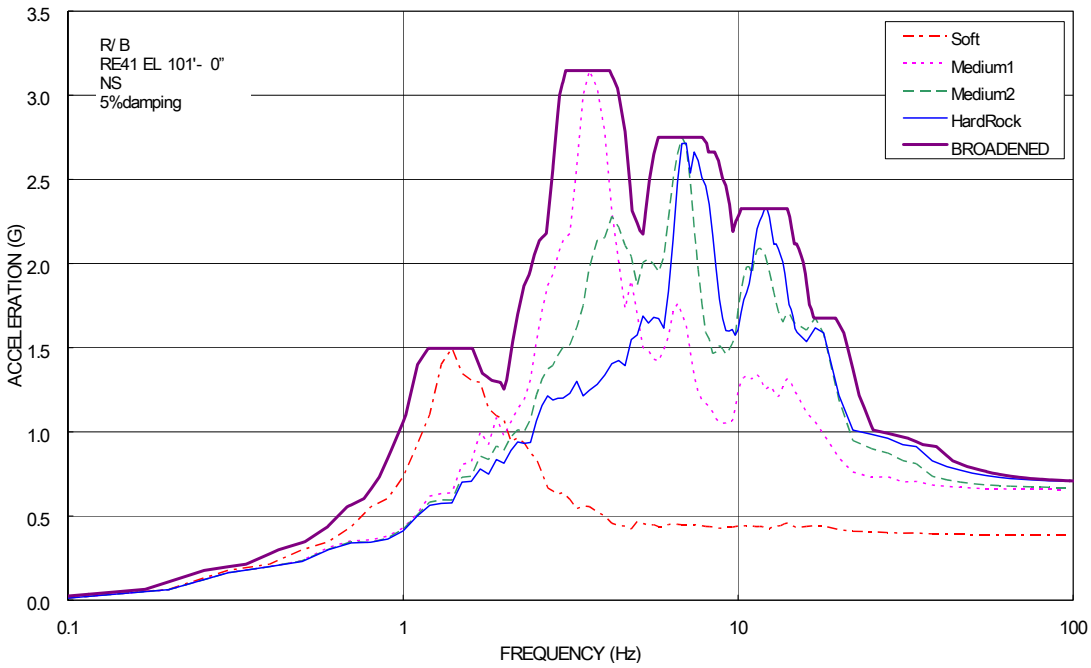

Figure 3I-1 ISRS of R/B (NS - Direction)

(Sheet 26 of 31)

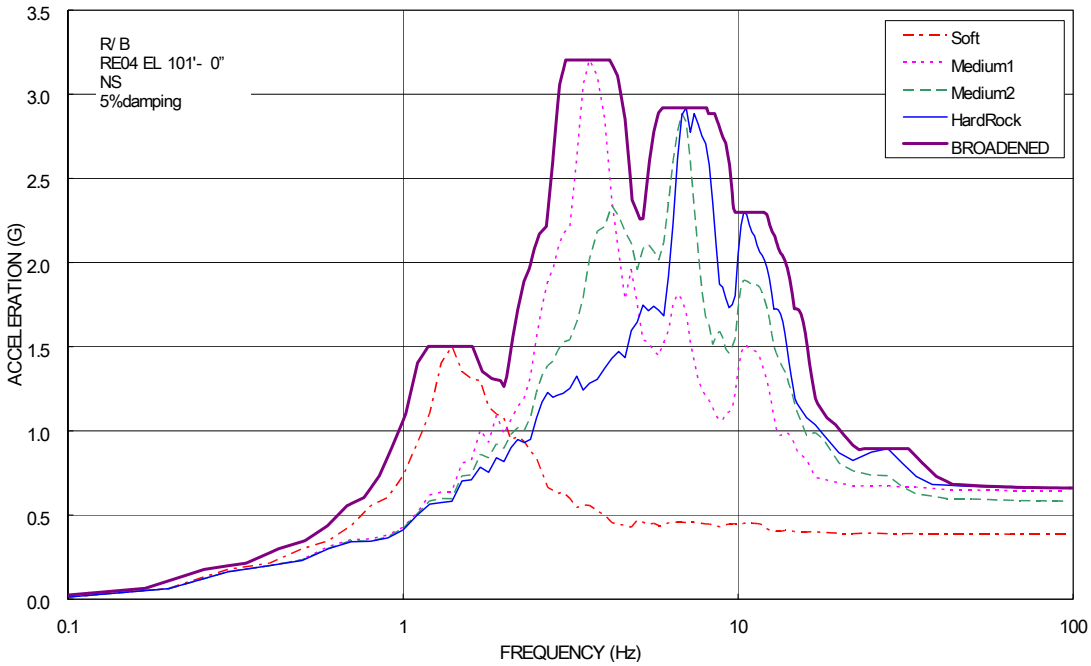

Figure 3I-1 ISRS of R/B (NS - Direction)

(Sheet 27 of 31)

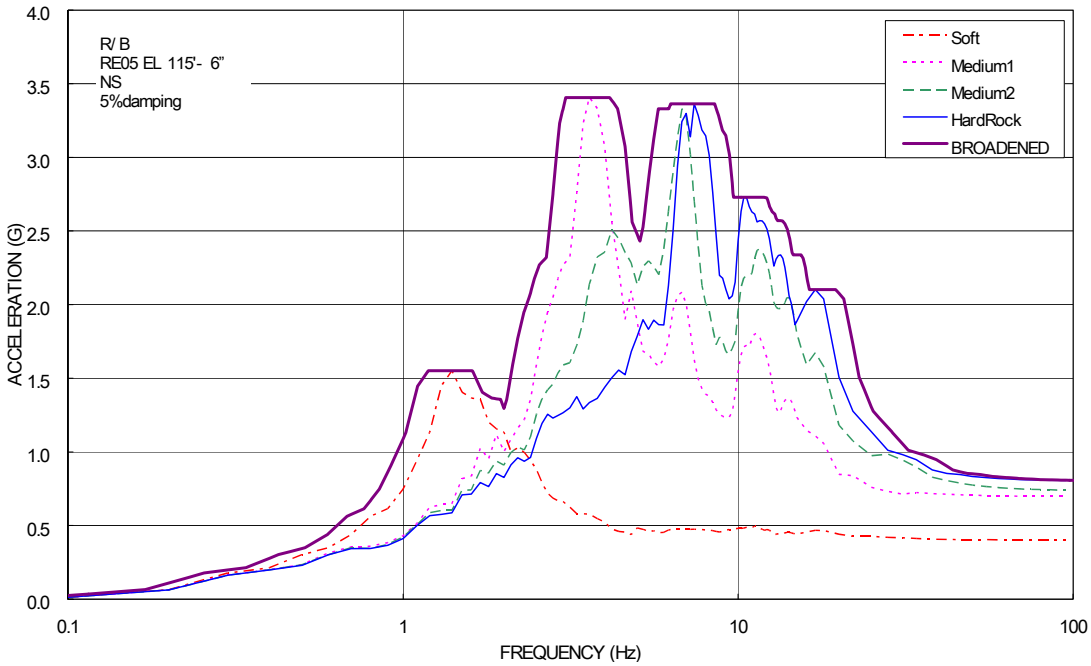

Figure 3I-1 ISRS of R/B (NS - Direction)

(Sheet 28 of 31)

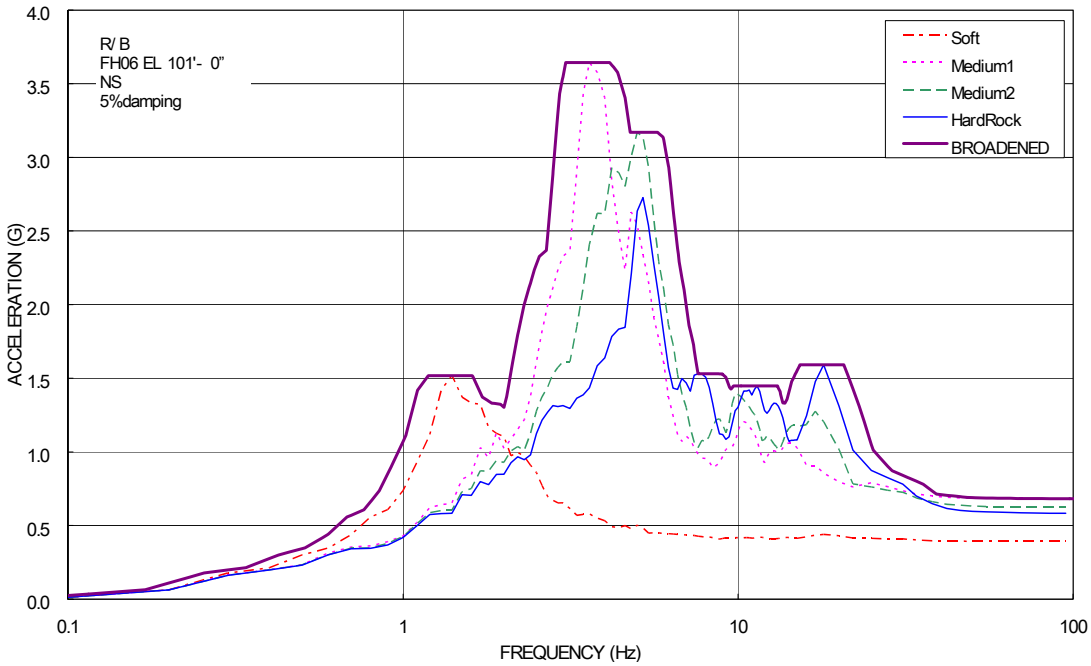

Figure 3I-1 ISRS of R/B (NS - Direction)

(Sheet 29 of 31)

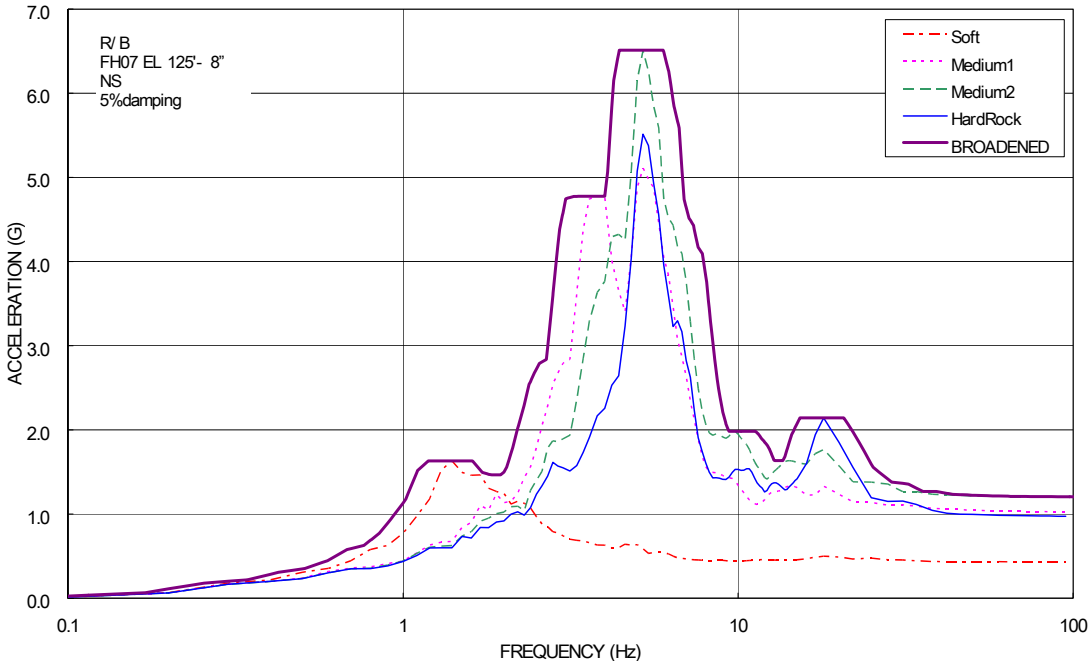

Figure 3I-1 ISRS of R/B (NS - Direction)

(Sheet 30 of 31)

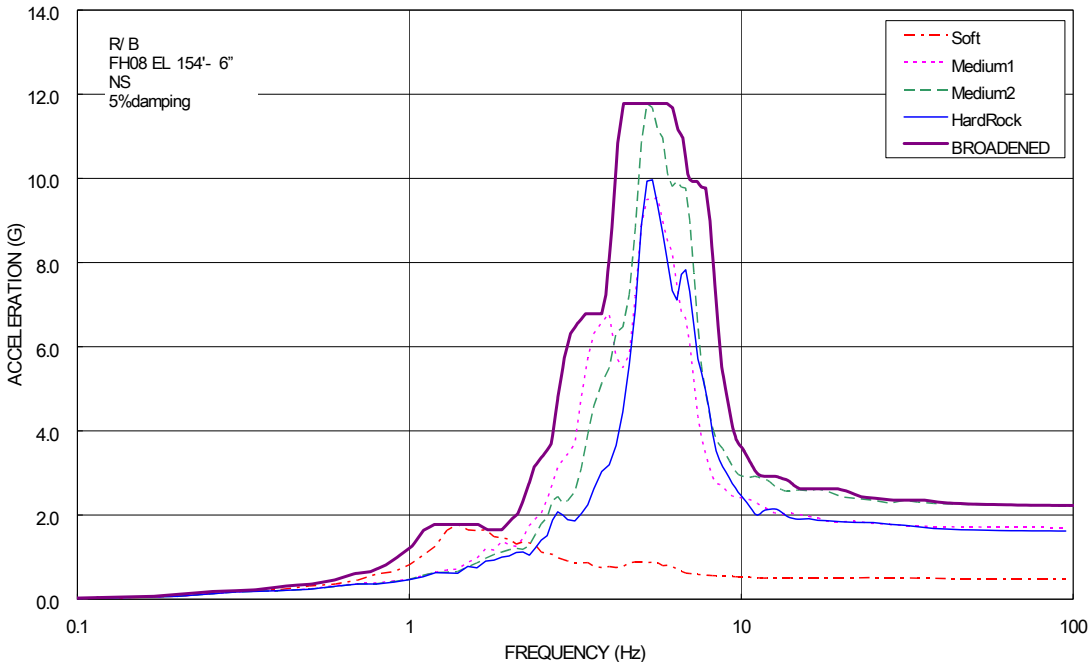

Figure 3I-1 ISRS of R/B (NS - Direction)

(Sheet 31 of 31)

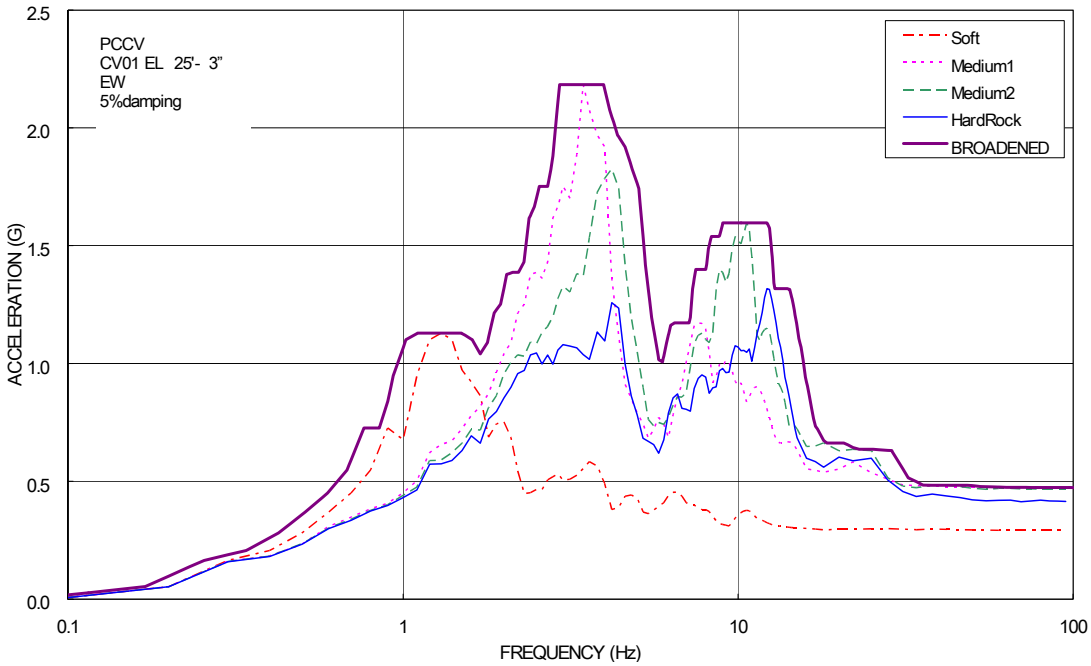

Figure 3I-2 ISRS of PCCV (EW - Direction)

(Sheet 1 of 31)

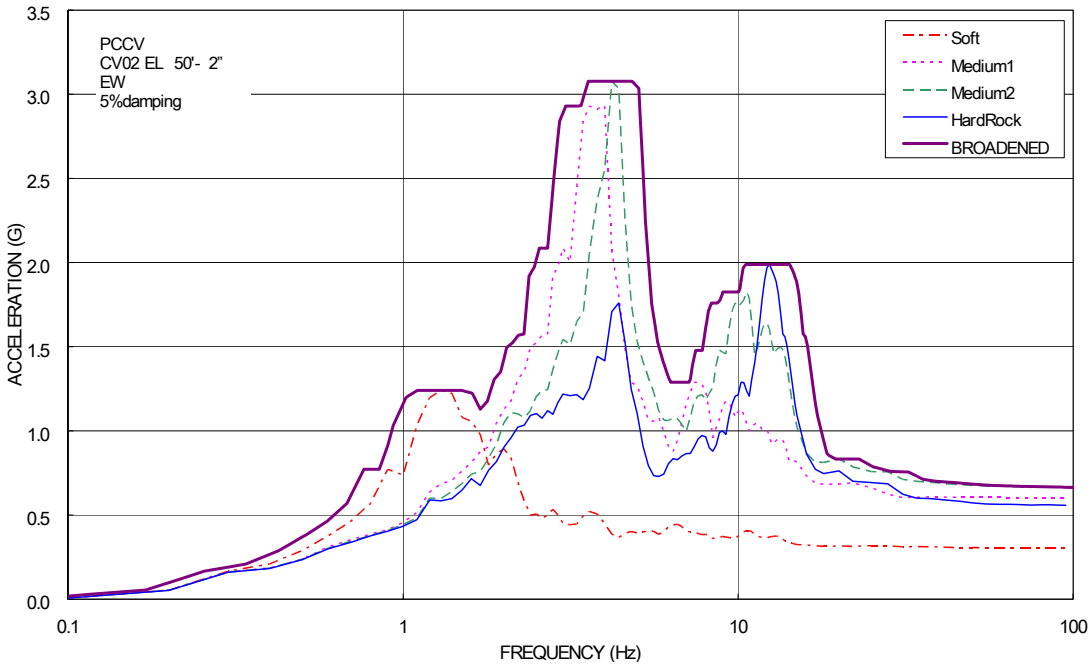

Figure 3I-2 ISRS of PCCV (EW - Direction)

(Sheet 2 of 31)

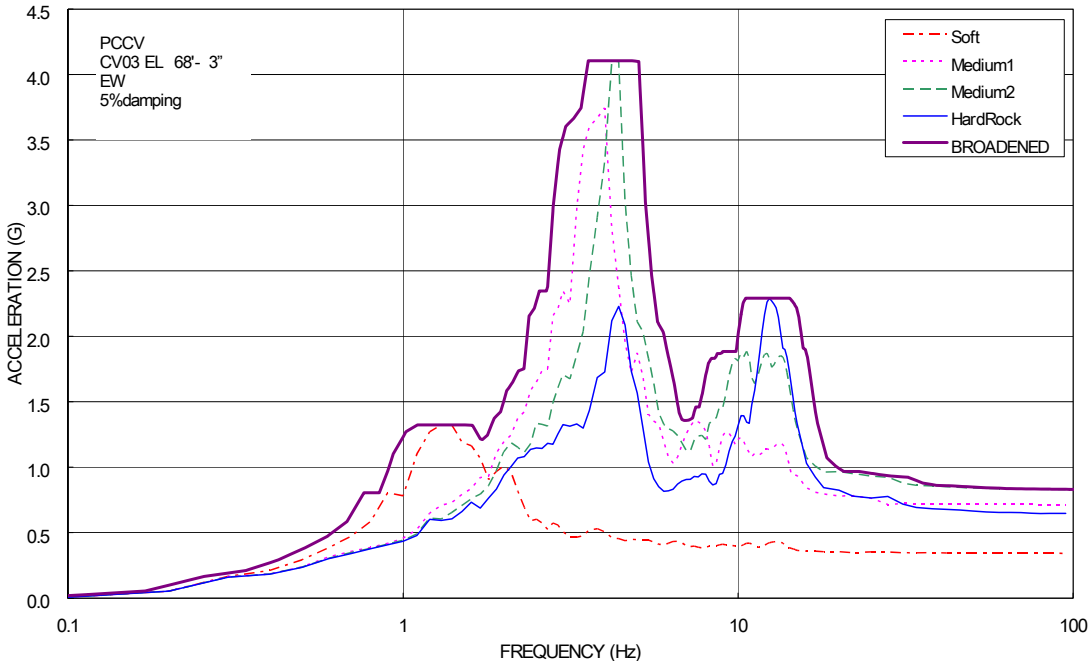

Figure 3I-2 ISRS of PCCV (EW - Direction)

(Sheet 3 of 31)

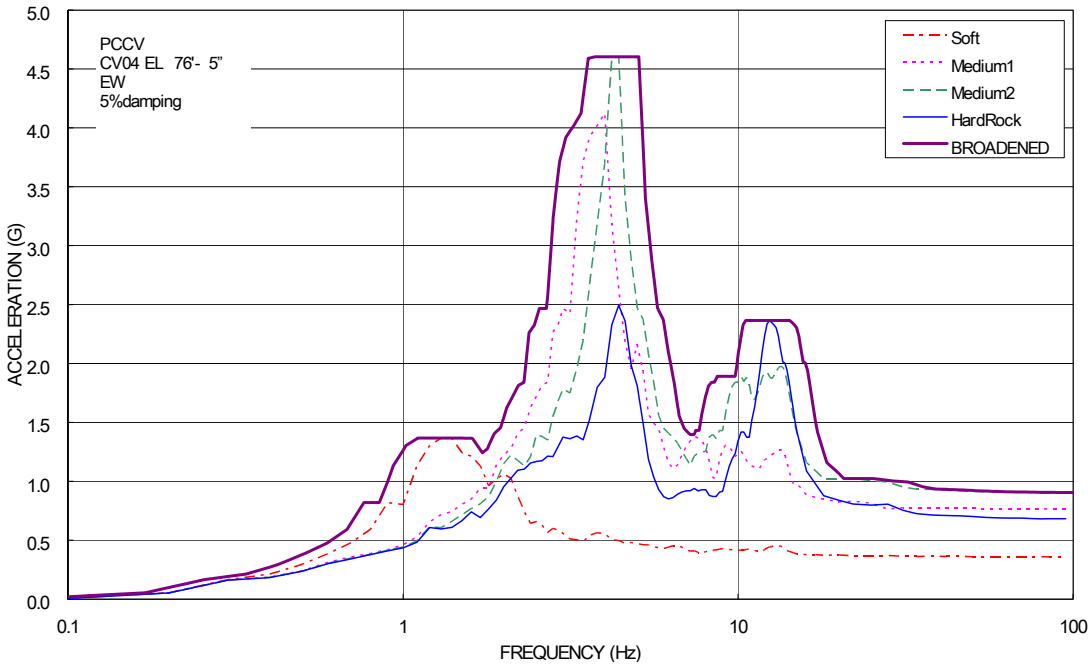

Figure 3I-2 ISRS of PCCV (EW - Direction)

(Sheet 4 of 31)

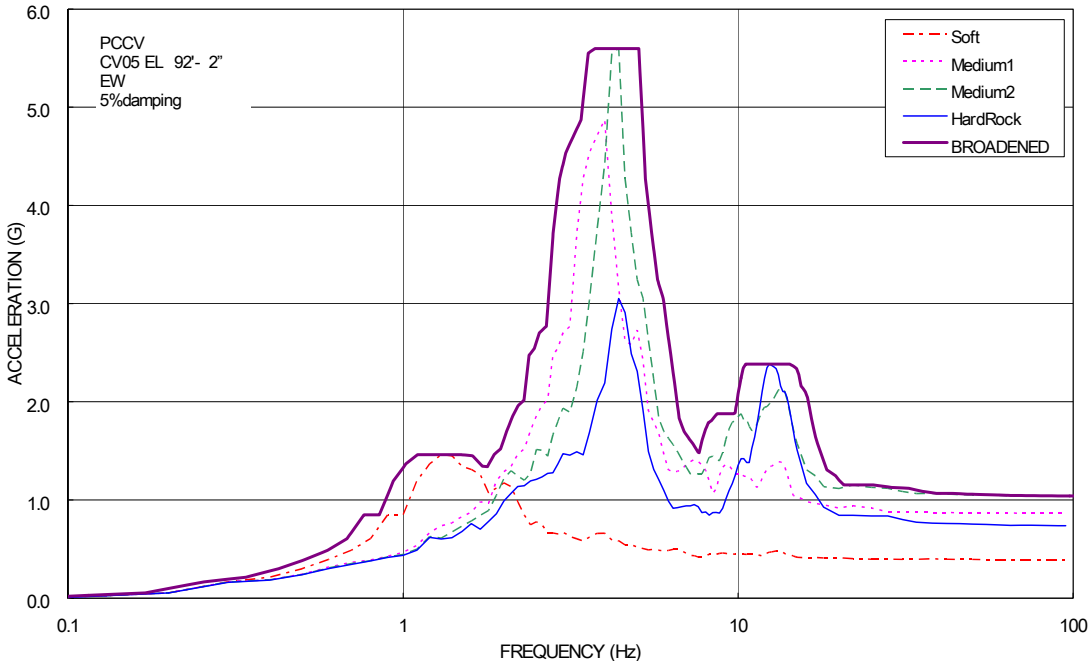

Figure 3I-2 ISRS of PCCV (EW - Direction)

(Sheet 5 of 31)

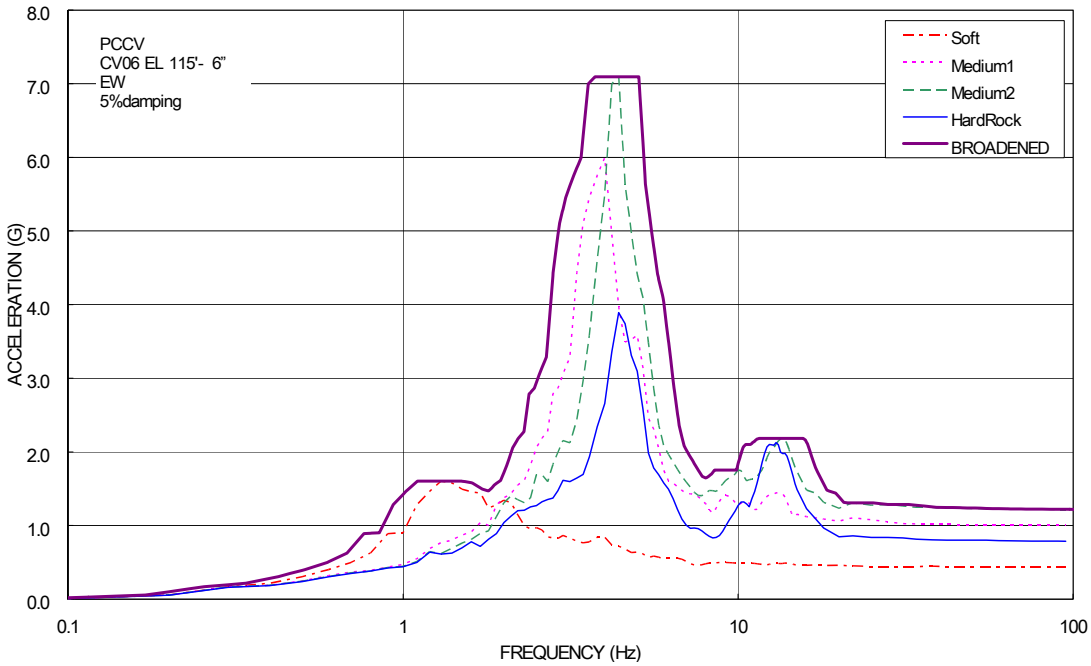

Figure 3I-2 ISRS of PCCV (EW - Direction)

(Sheet 6 of 31)

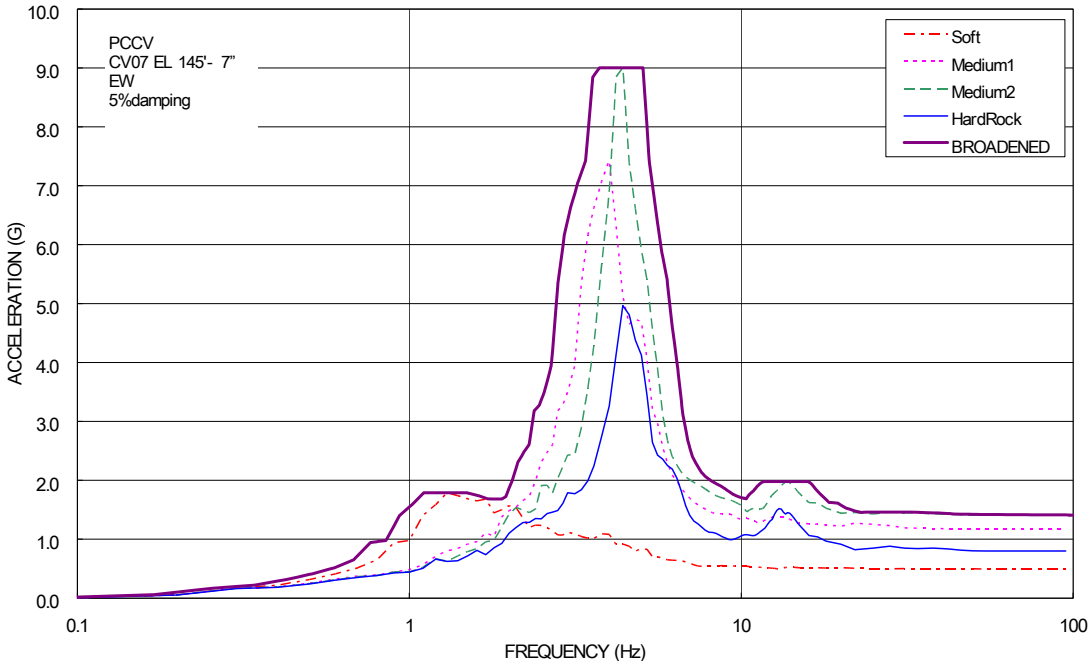

Figure 3I-2 ISRS of PCCV (EW - Direction)

(Sheet 7 of 31)

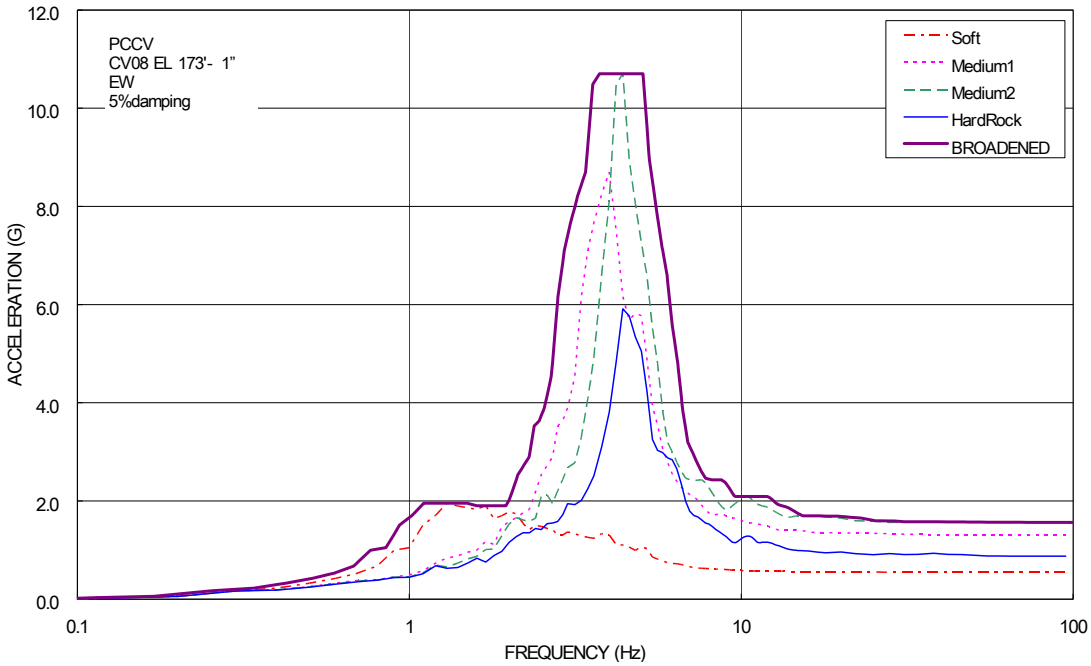

Figure 3I-2 ISRS of PCCV (EW - Direction)

(Sheet 8 of 31)

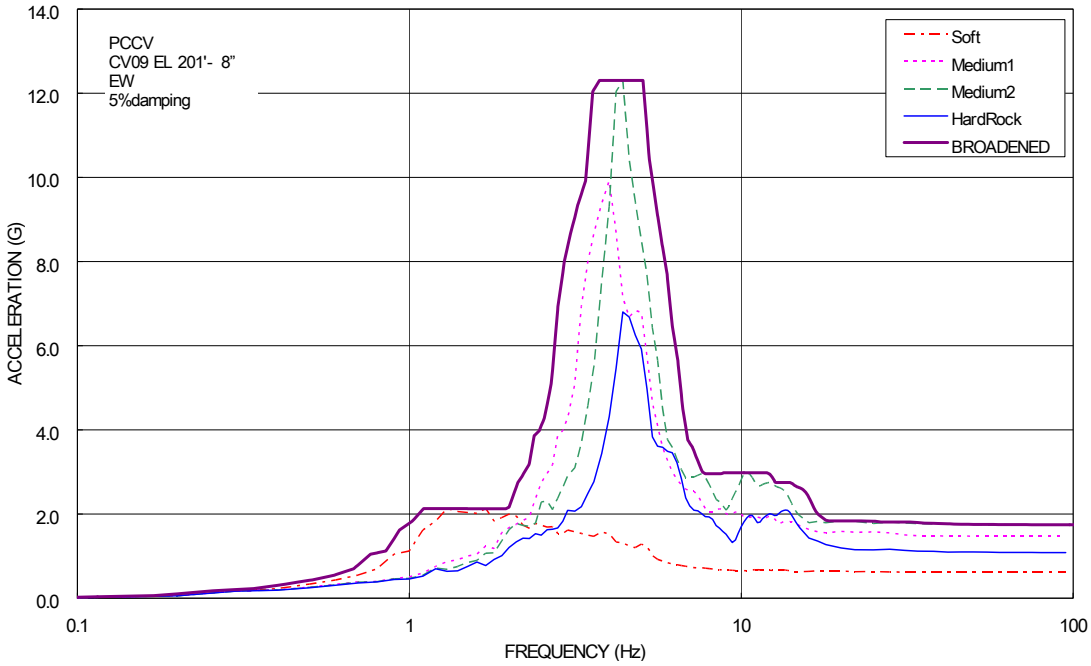

Figure 3I-2 ISRS of PCCV (EW - Direction)

(Sheet 9 of 31)

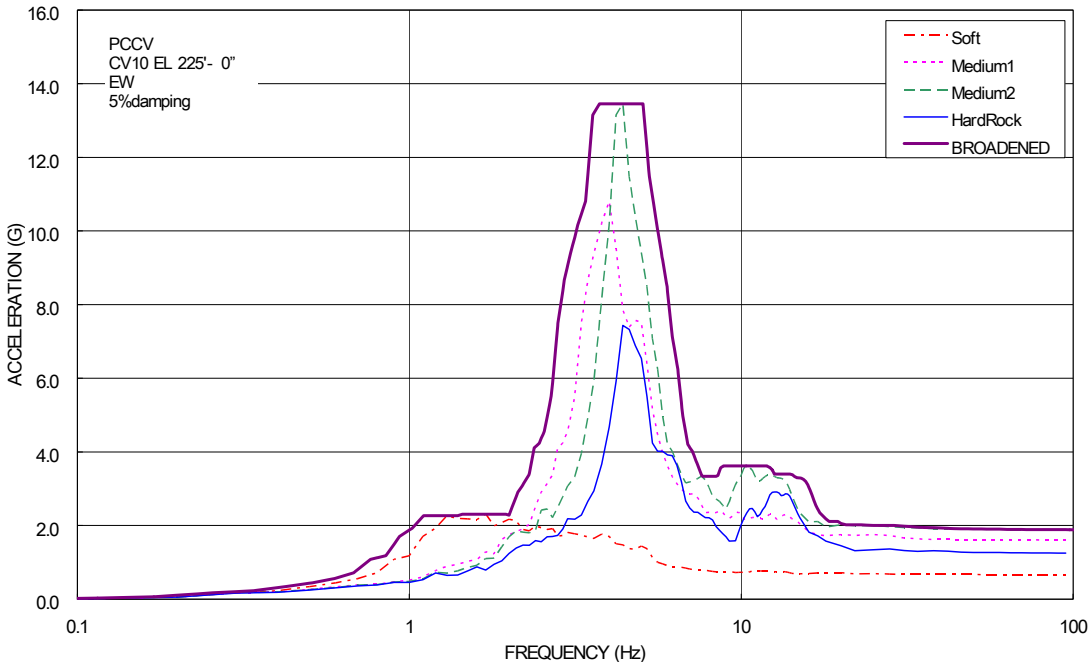

Figure 3I-2 ISRS of PCCV (EW - Direction)

(Sheet 10 of 31)

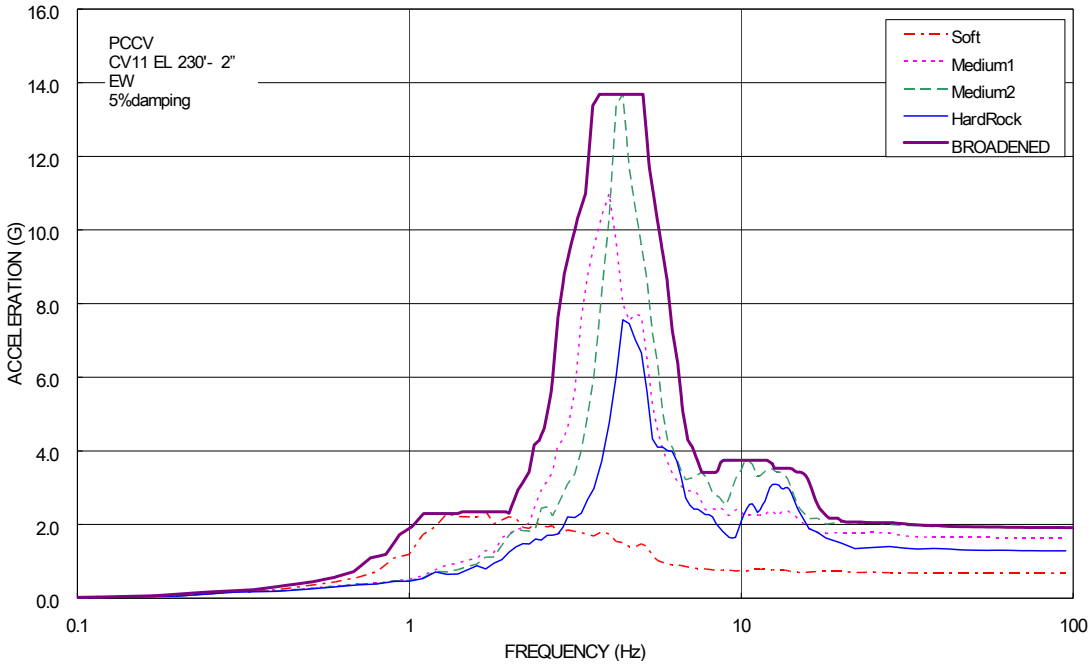

Figure 3I-2 ISRS of PCCV (EW - Direction)

(Sheet 11 of 31)

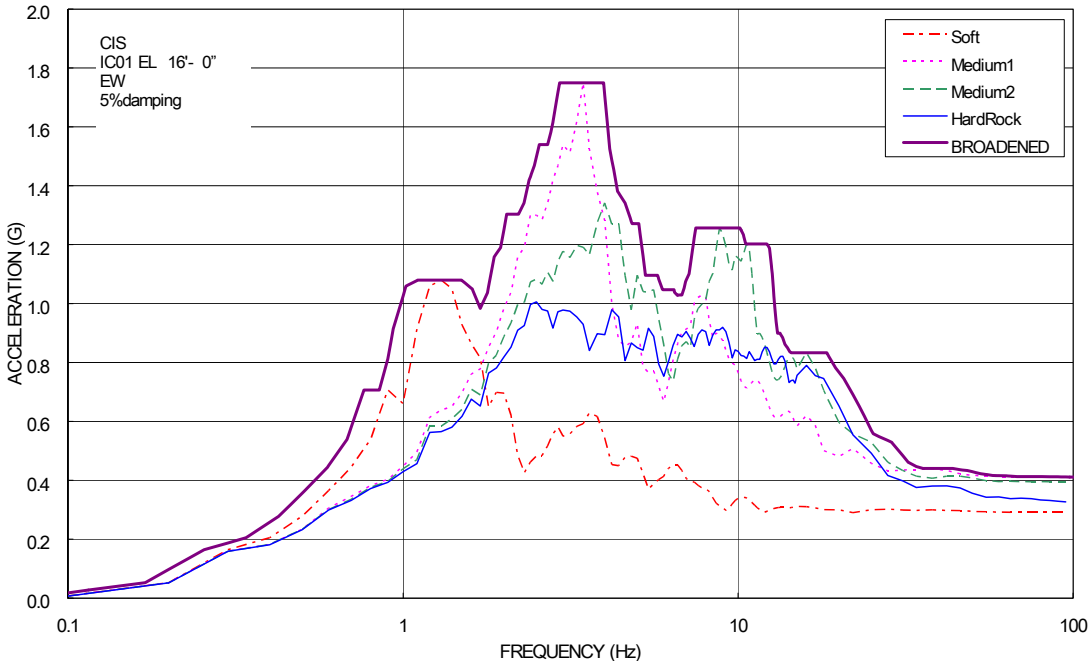

Figure 3I-2 ISRS of Containment Internal Structure (EW - Direction)

(Sheet 12 of 31)

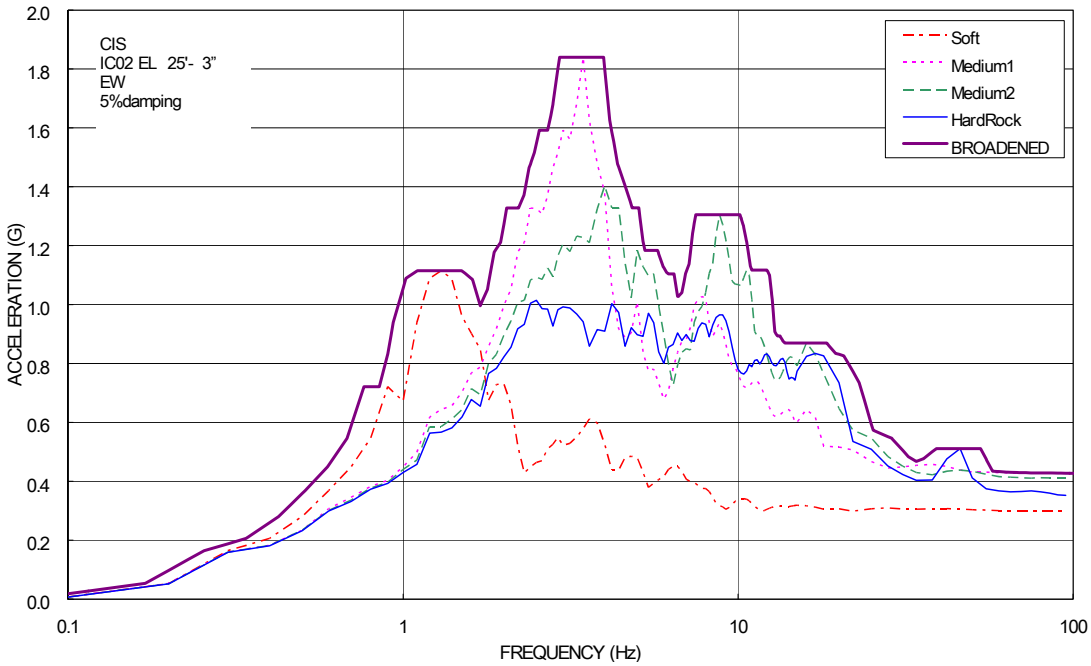

Figure 3I-2 ISRS of Containment Internal Structure (EW - Direction)

(Sheet 13 of 31)

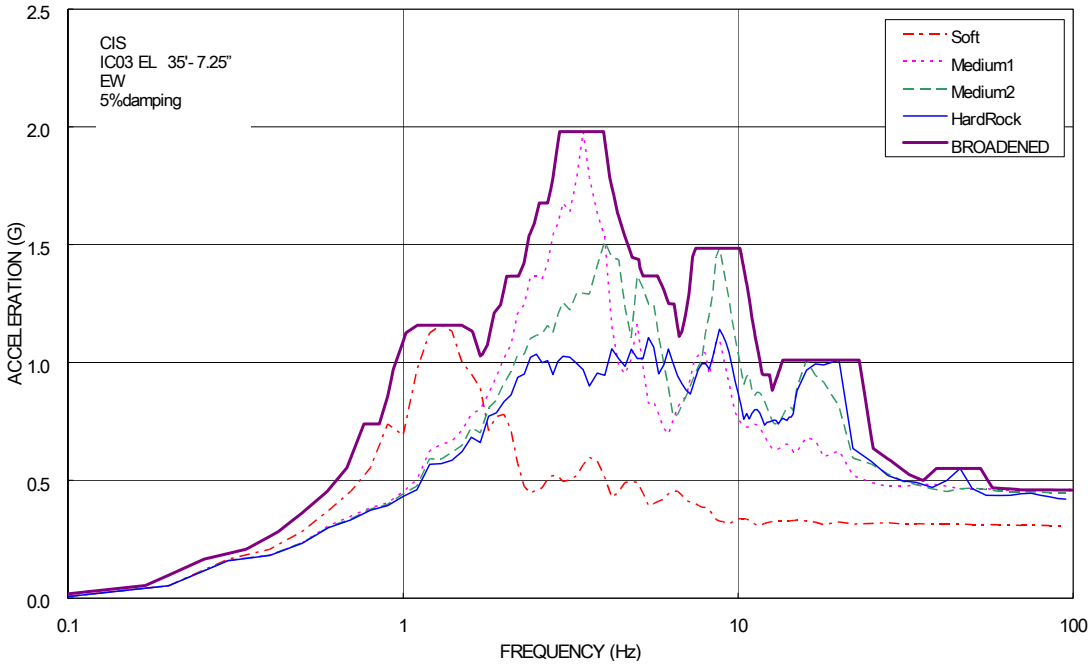

Figure 3I-2 ISRS of Containment Internal Structure (EW - Direction)

(Sheet 14 of 31)

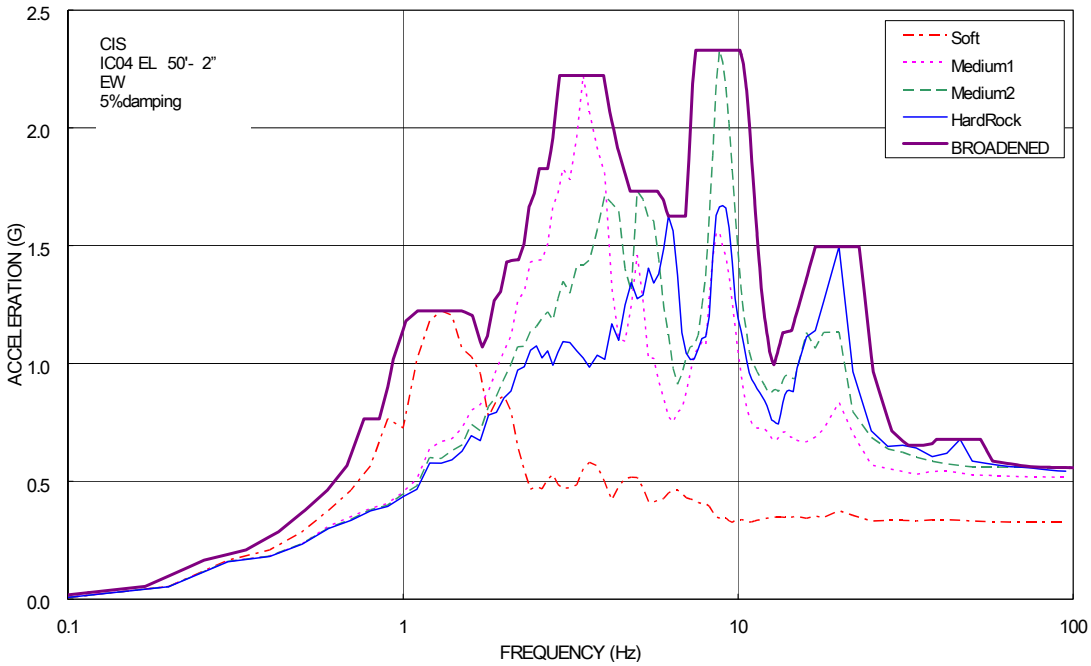

Figure 3I-2 ISRS of Containment Internal Structure (EW - Direction)

(Sheet 15 of 31)

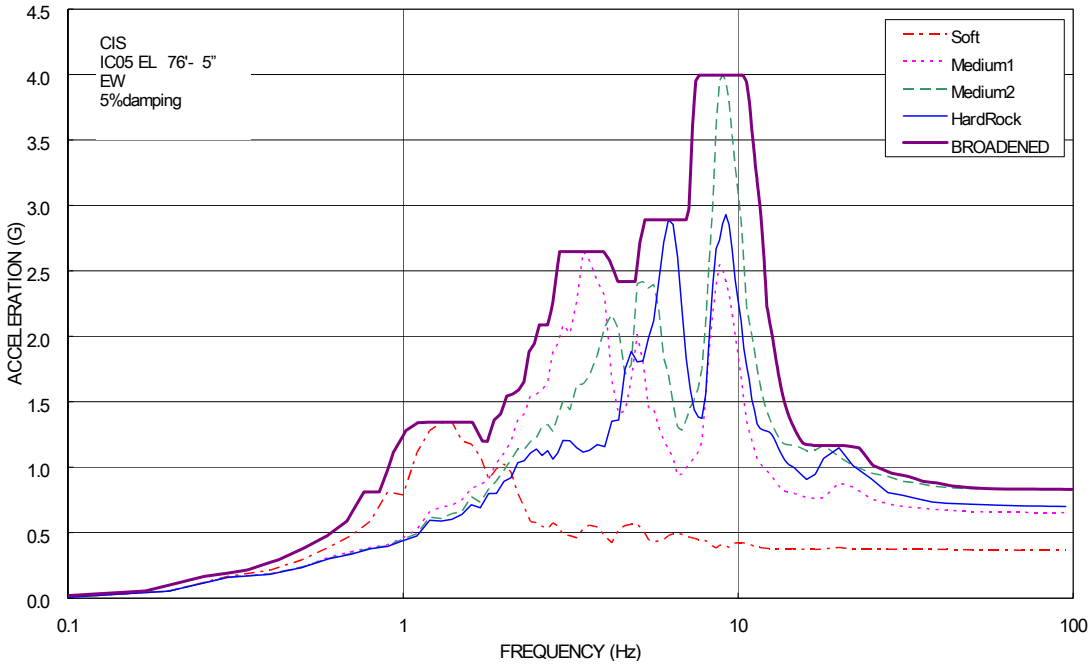

Figure 3I-2 ISRS of Containment Internal Structure (EW - Direction)

(Sheet 16 of 31)

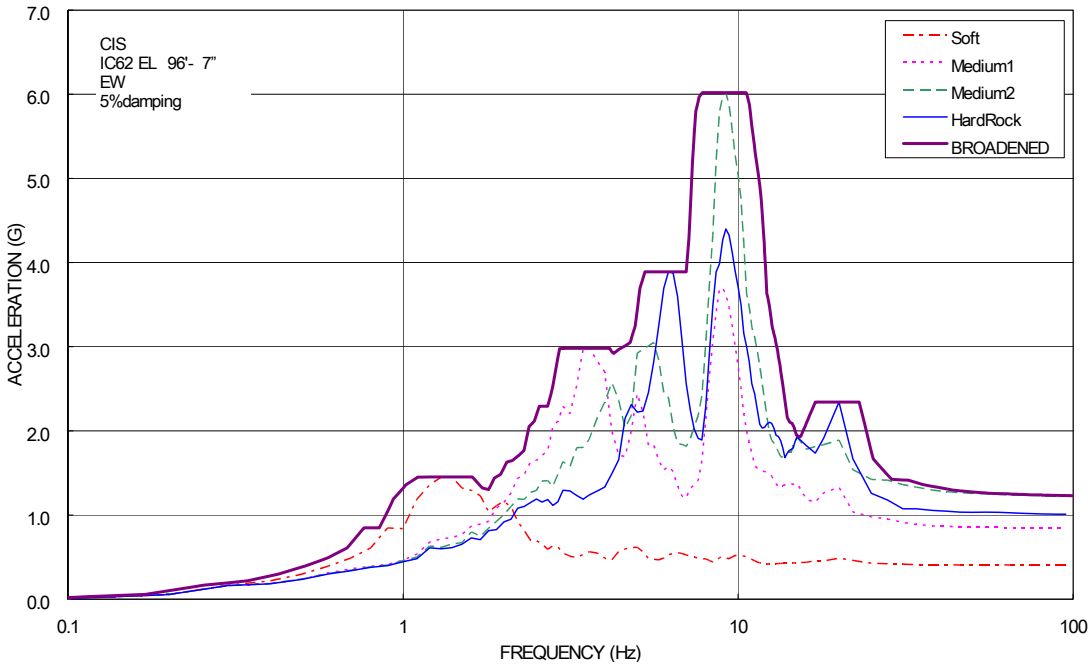

Figure 3I-2 ISRS of Containment Internal Structure (EW - Direction)

(Sheet 17 of 31)

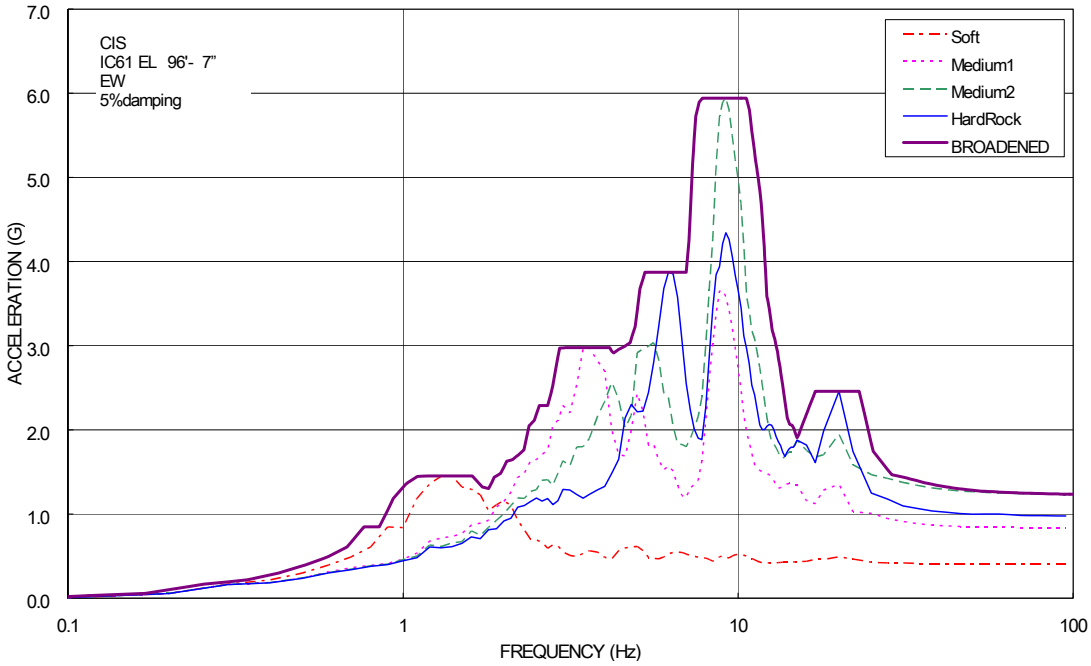

Figure 3I-2 ISRS of Containment Internal Structure (EW - Direction)

(Sheet 18 of 31)

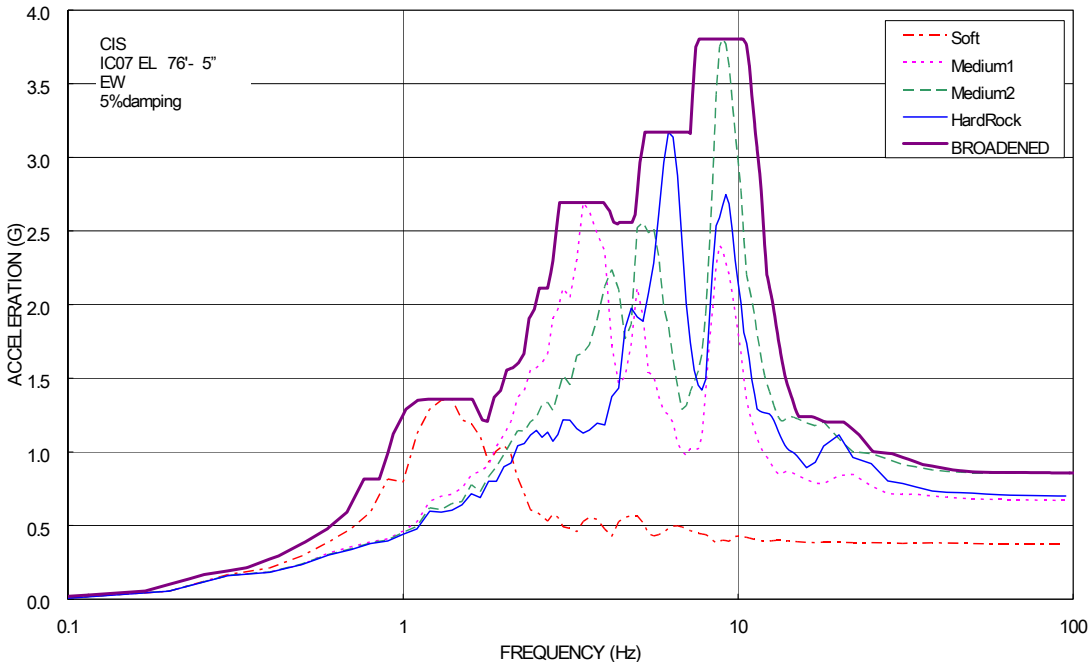

Figure 3I-2 ISRS of Containment Internal Structure (EW - Direction)

(Sheet 19 of 31)

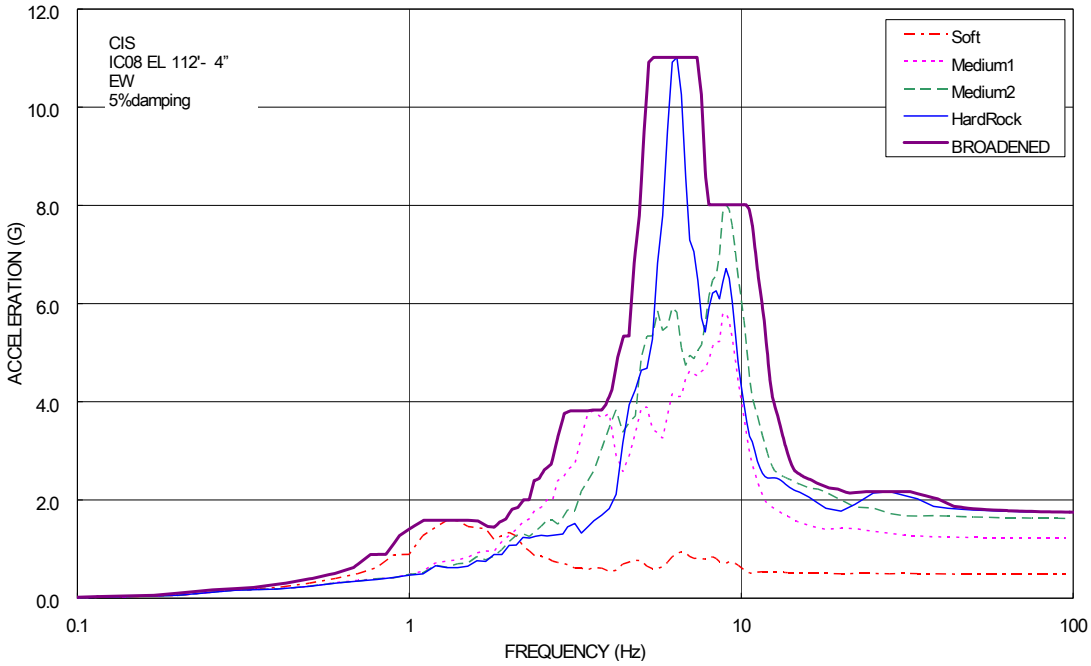

Figure 3I-2 ISRS of Containment Internal Structure (EW - Direction)

(Sheet 20 of 31)

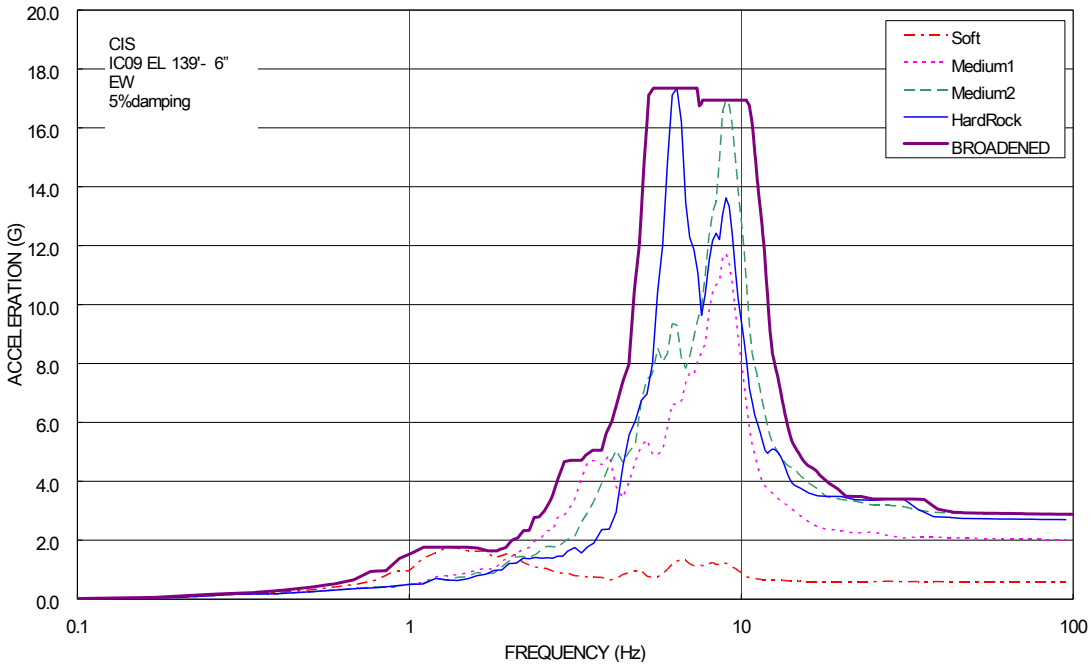

Figure 3I-2 ISRS of Containment Internal Structure (EW - Direction)

(Sheet 21 of 31)

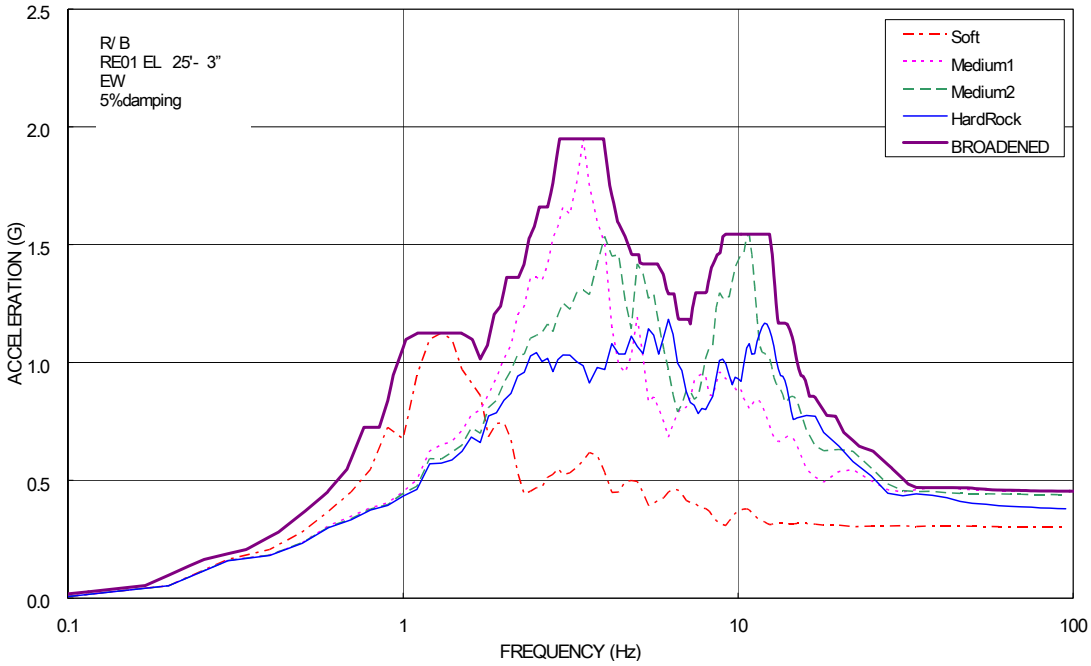

Figure 3I-2 ISRS of R/B (EW - Direction)

(Sheet 22 of 31)

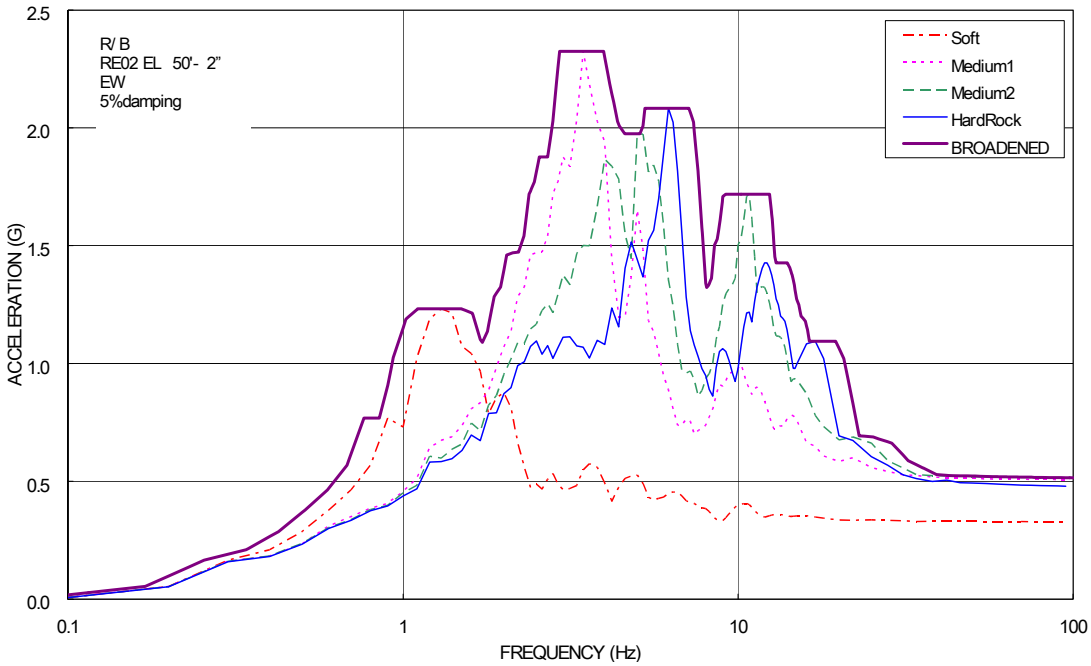

Figure 3I-2 ISRS of R/B (EW - Direction)

(Sheet 23 of 31)

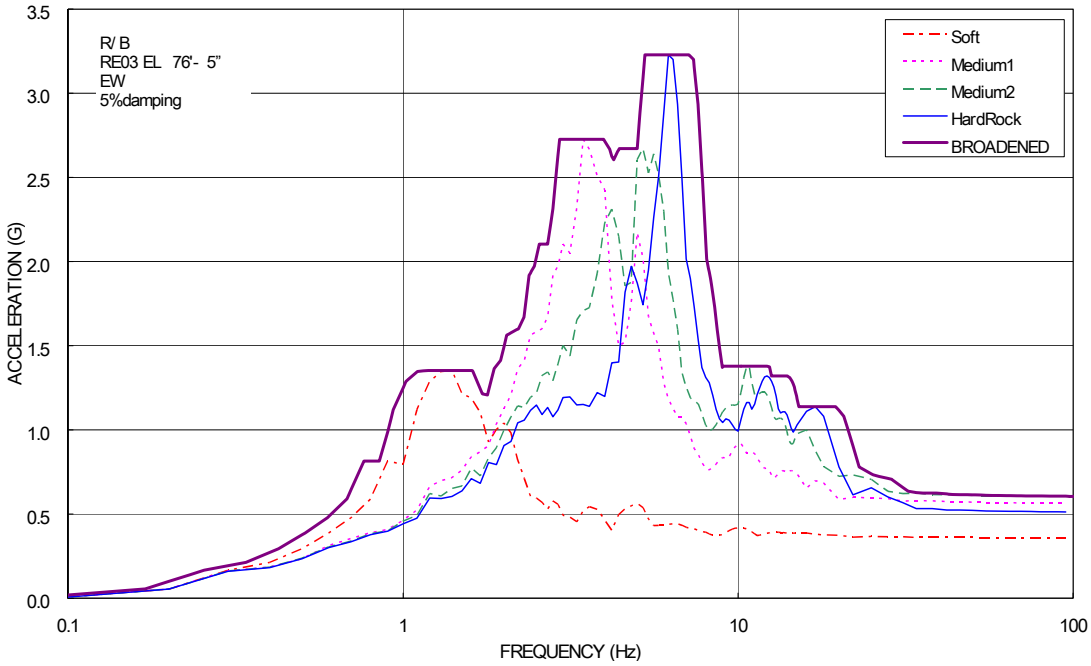

Figure 3I-2 ISRS of R/B (EW - Direction)

(Sheet 24 of 31)

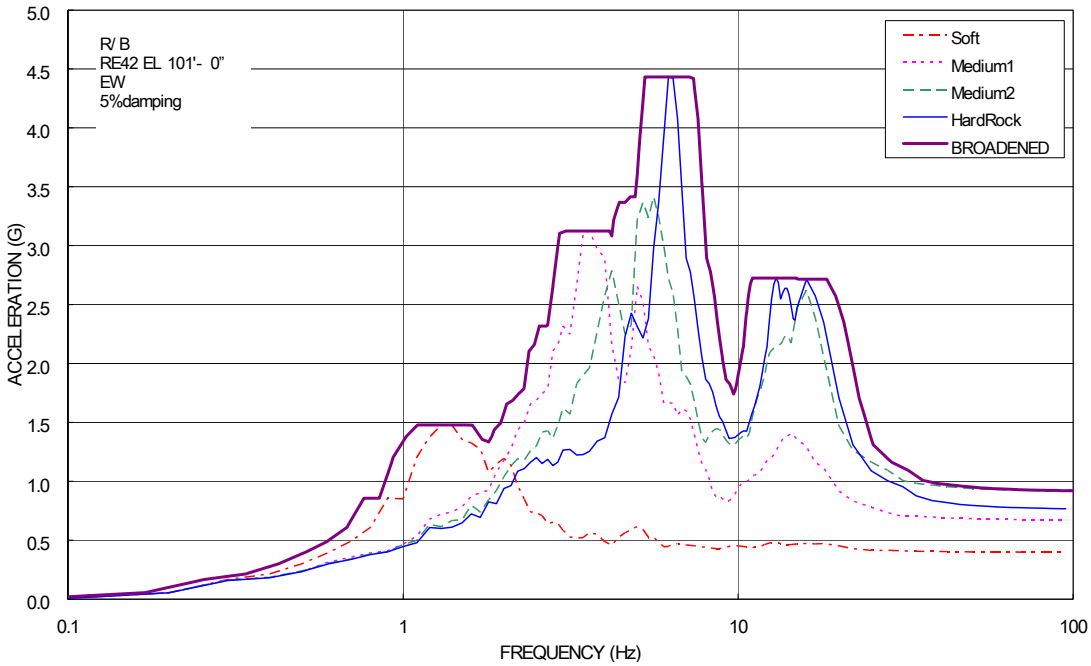

Figure 3I-2 ISRS of R/B (EW - Direction)

(Sheet 25 of 31)

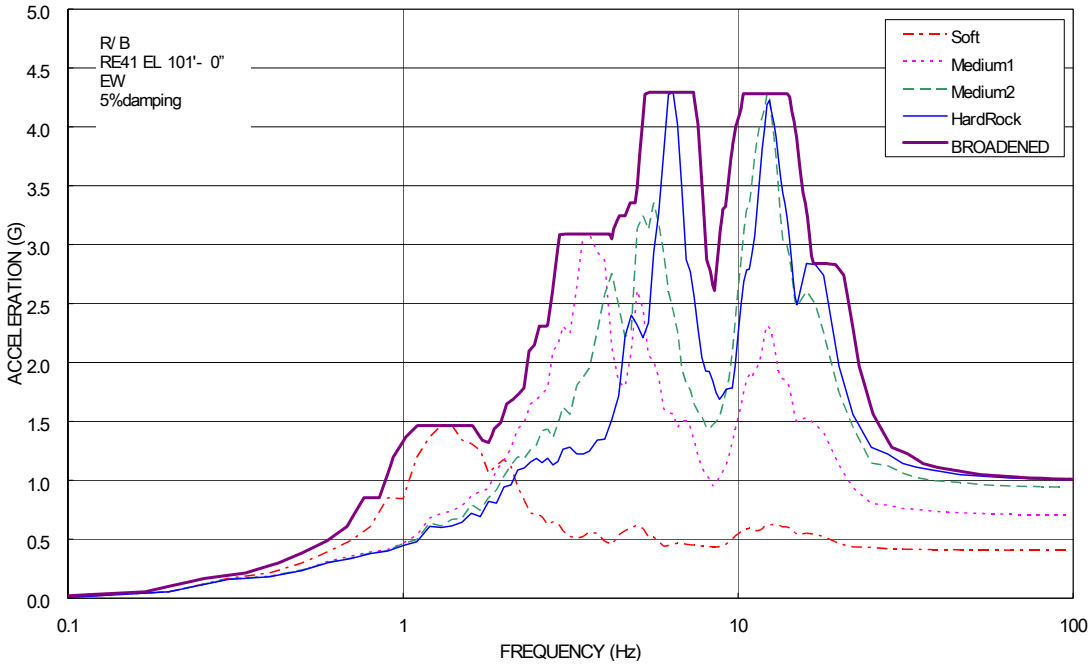

Figure 3I-2 ISRS of R/B (EW - Direction)

(Sheet 26 of 31)

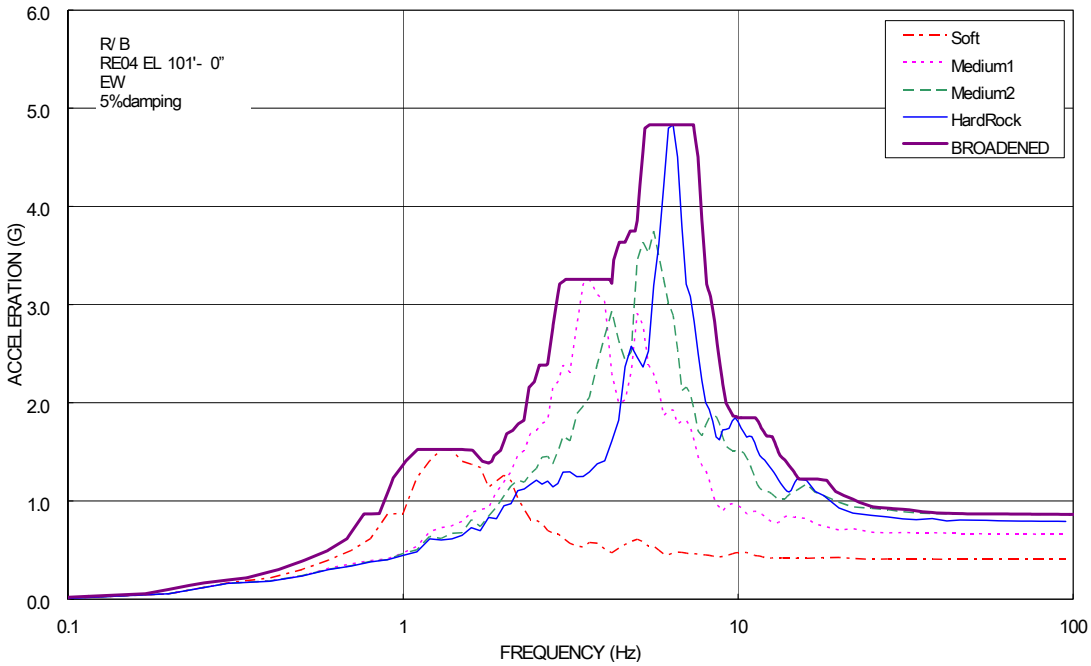

Figure 3I-2 ISRS of R/B (EW - Direction)

(Sheet 27 of 31)

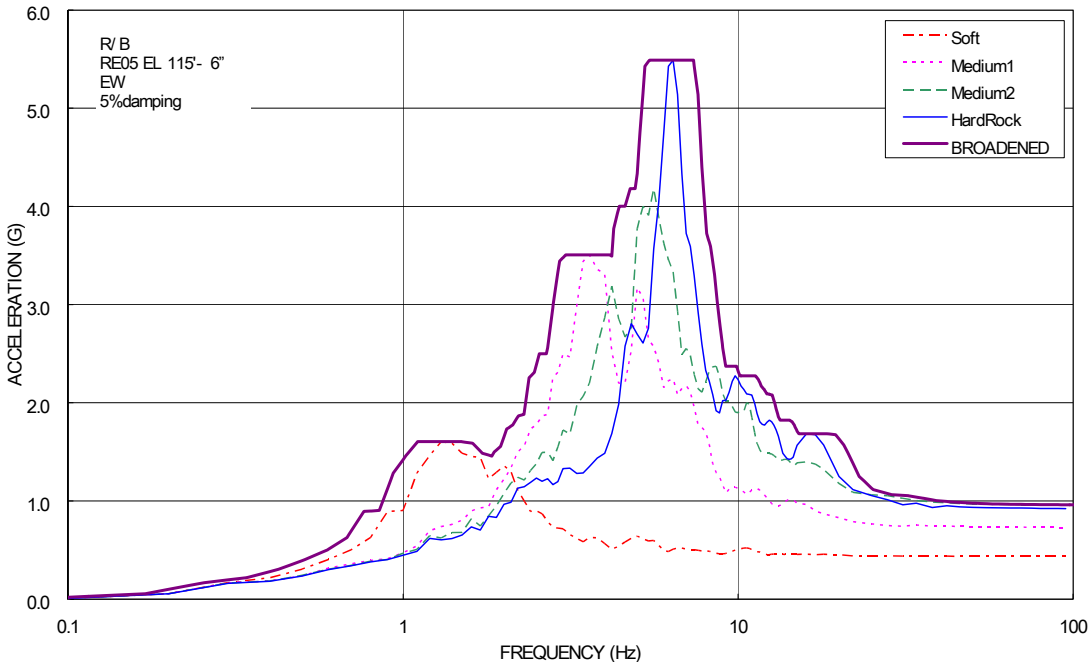

Figure 3I-2 ISRS of R/B (EW - Direction)

(Sheet 28 of 31)

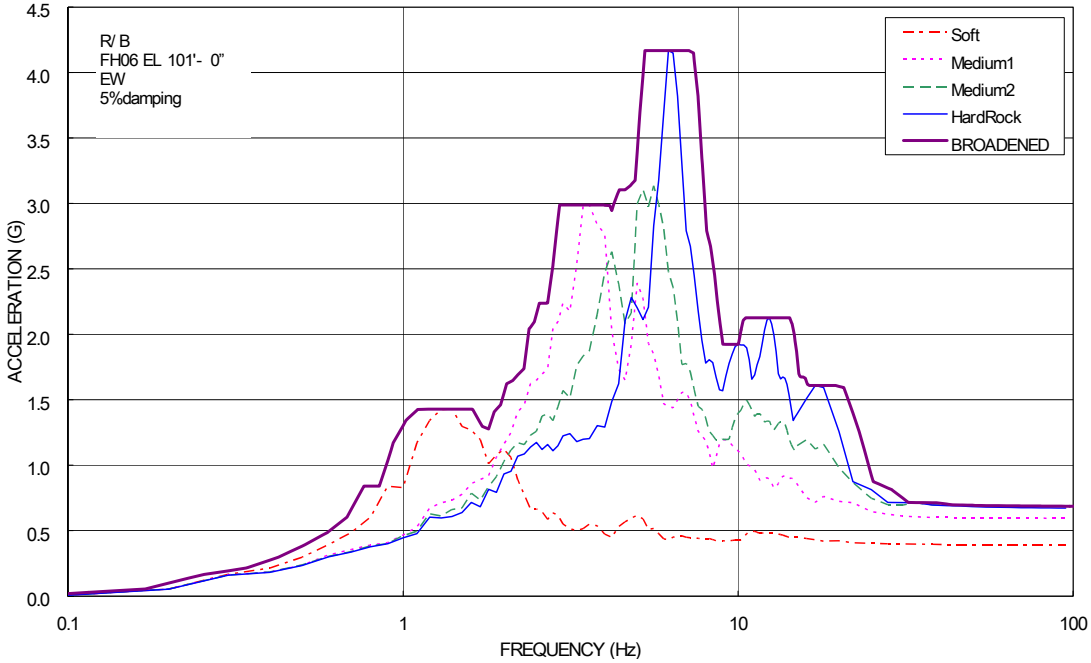

Figure 3I-2 ISRS of R/B (EW - Direction)

(Sheet 29 of 31)

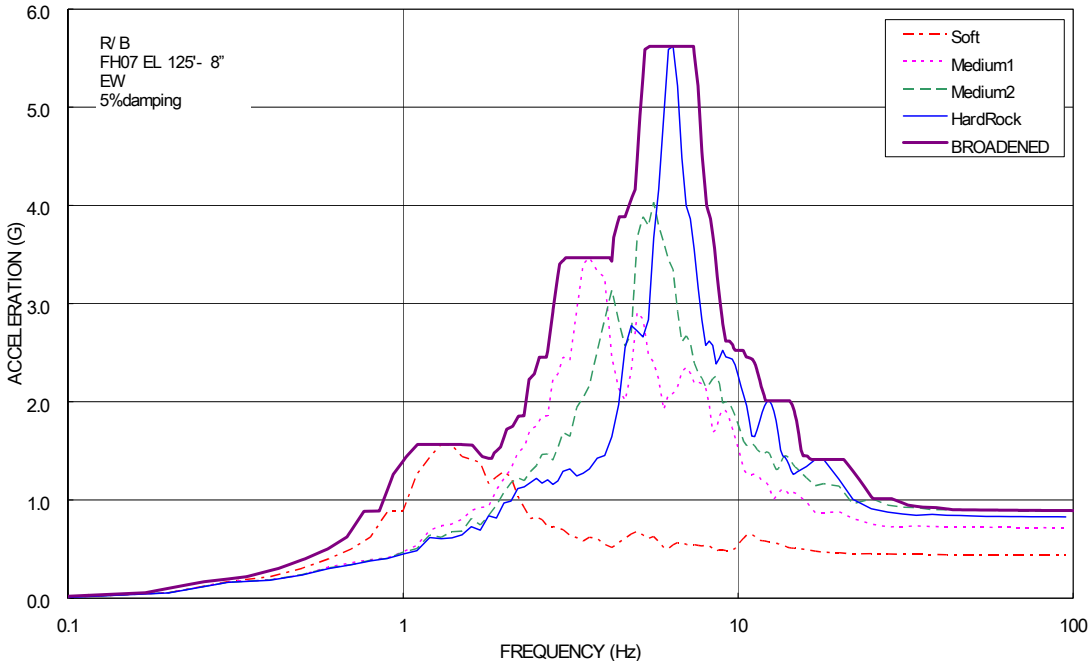

Figure 3I-2 ISRS of R/B (EW - Direction)

(Sheet 30 of 31)

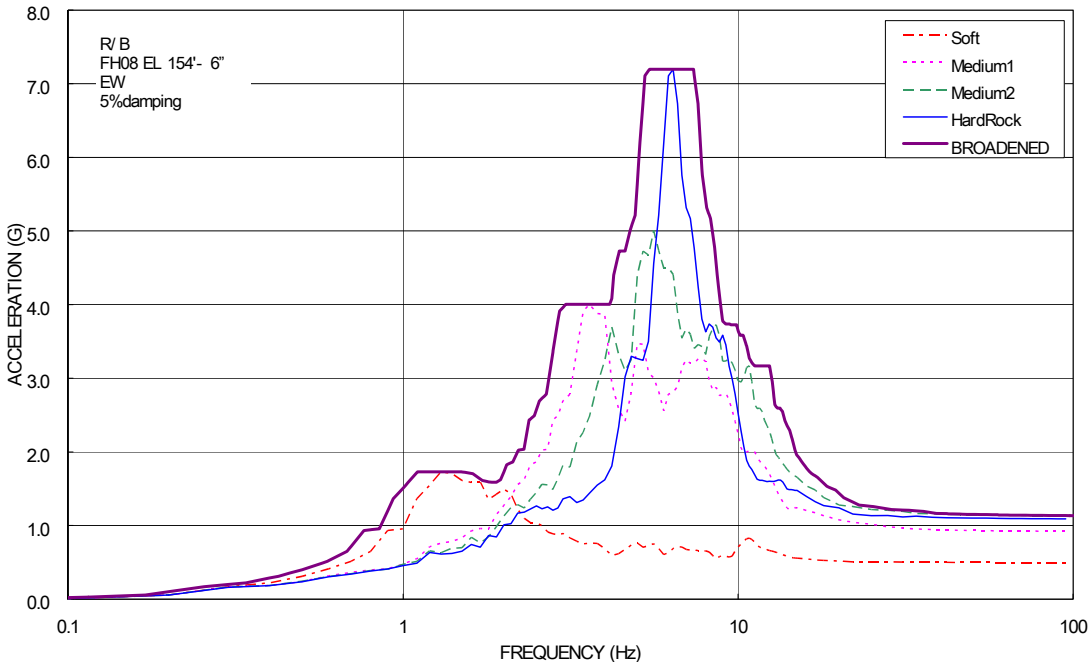

Figure 3I-2 ISRS of R/B (EW - Direction)

(Sheet 31 of 31)

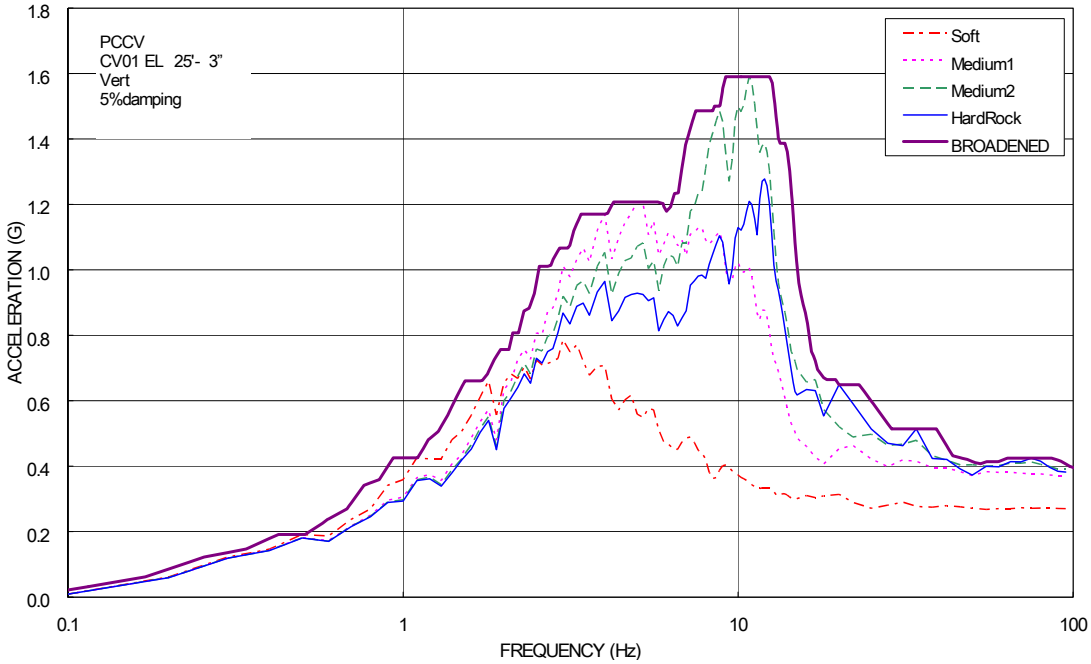

Figure 3I-3 ISRS of PCCV (Vertical - Direction)

(Sheet 1 of 31)

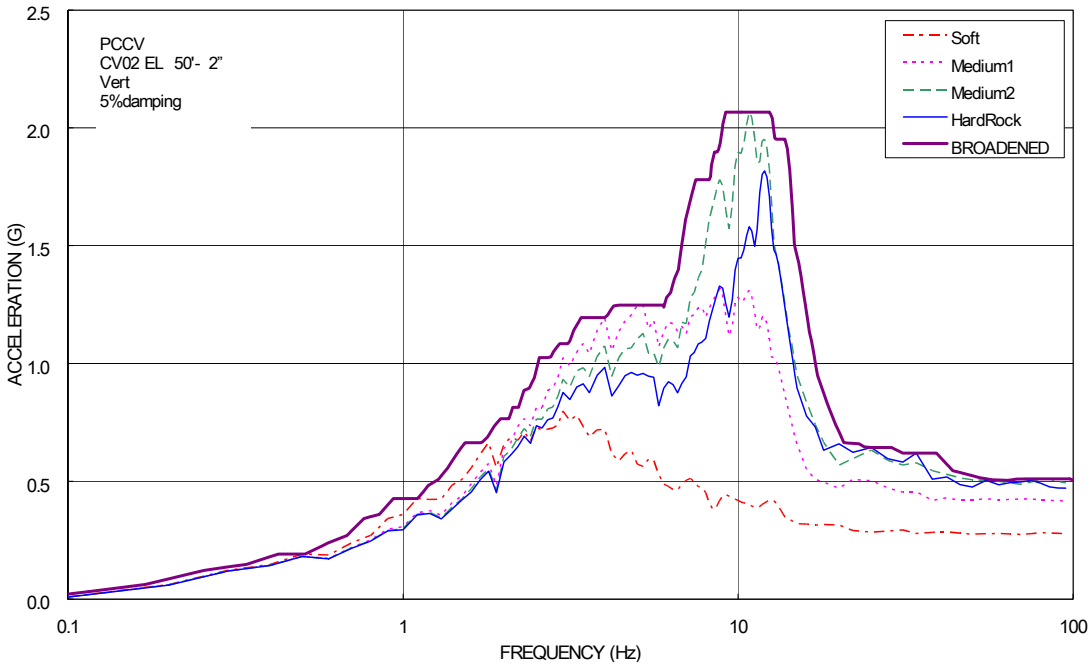

Figure 3I-3 ISRS of PCCV (Vertical - Direction)

(Sheet 2 of 31)

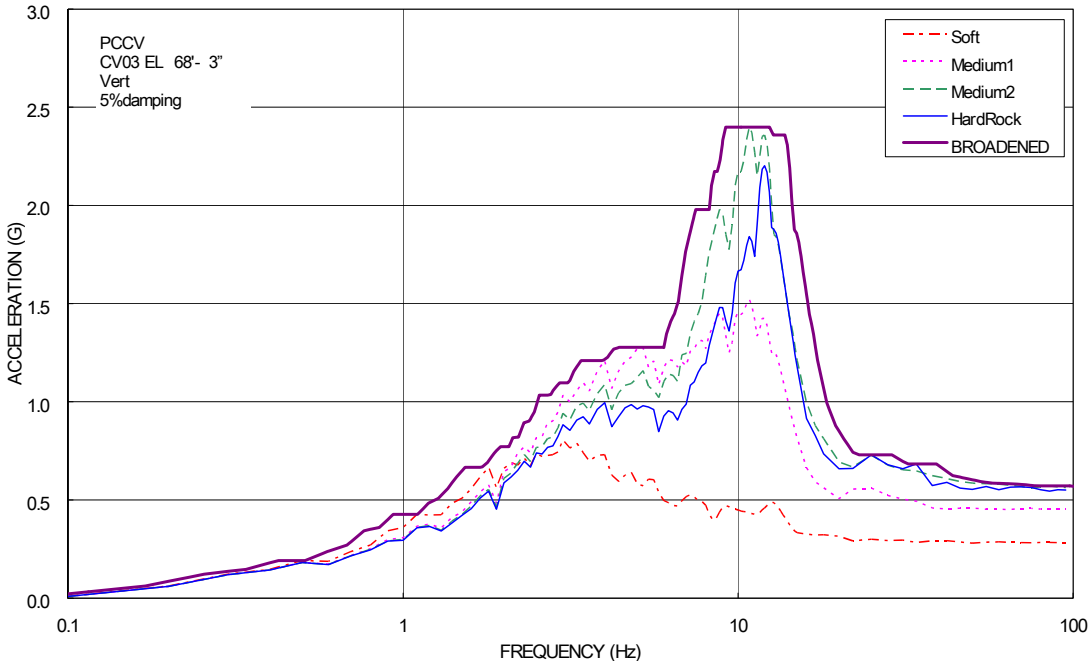

Figure 3I-3 ISRS of PCCV (Vertical - Direction)

(Sheet 3 of 31)

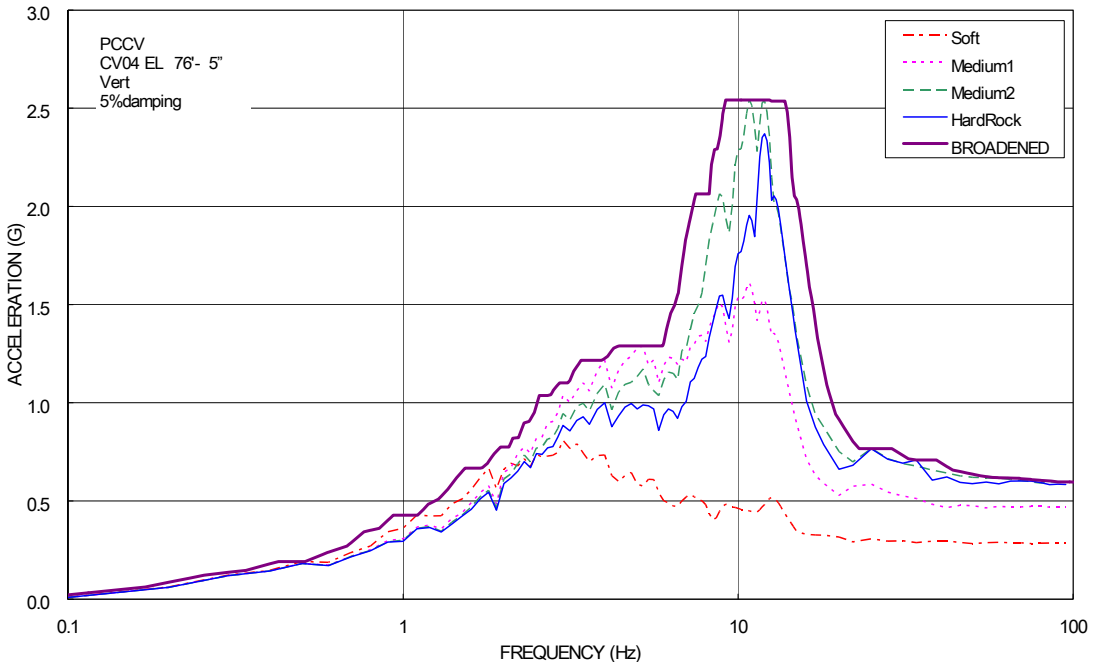

Figure 3I-3 ISRS of PCCV (Vertical - Direction)

(Sheet 4 of 31)

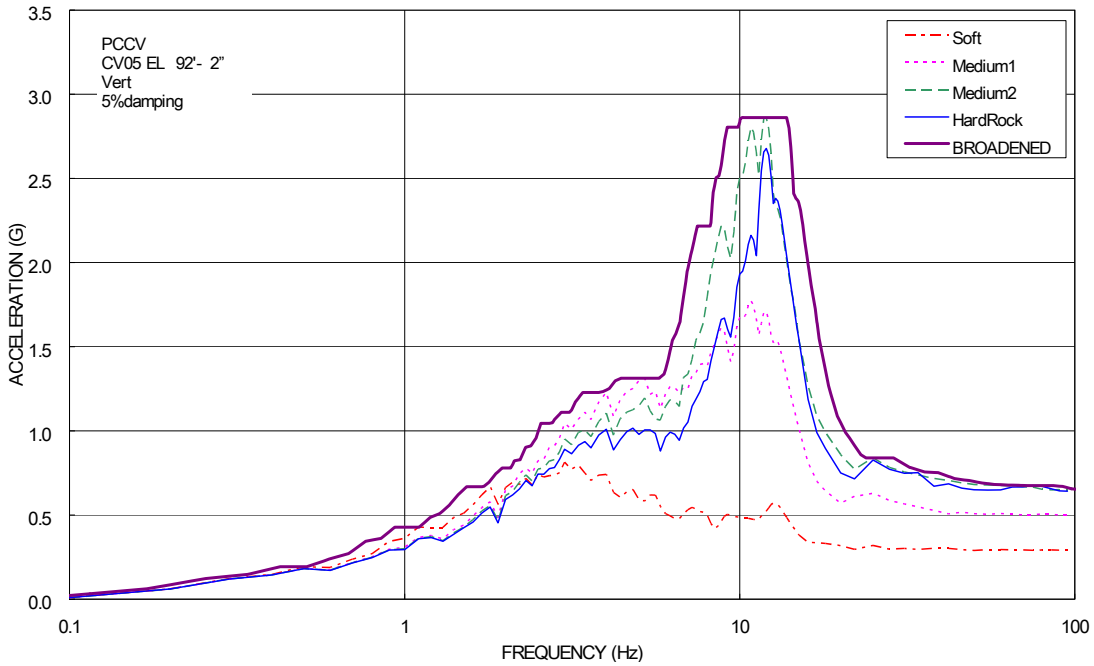

Figure 3I-3 ISRS of PCCV (Vertical - Direction)

(Sheet 5 of 31)

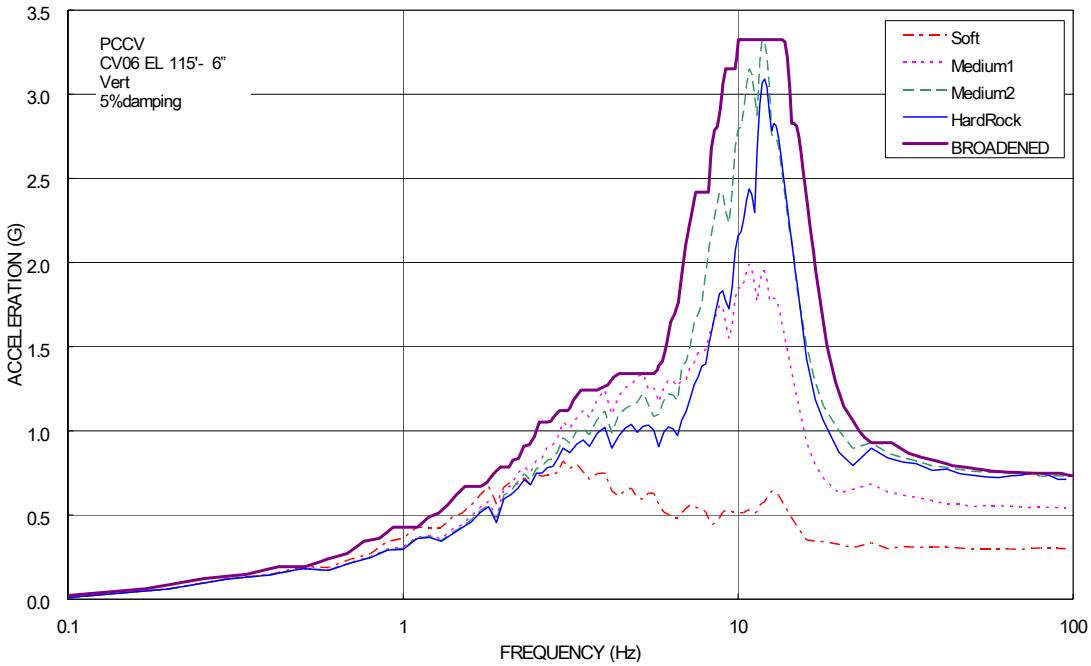

Figure 3I-3 ISRS of PCCV (Vertical - Direction)

(Sheet 6 of 31)

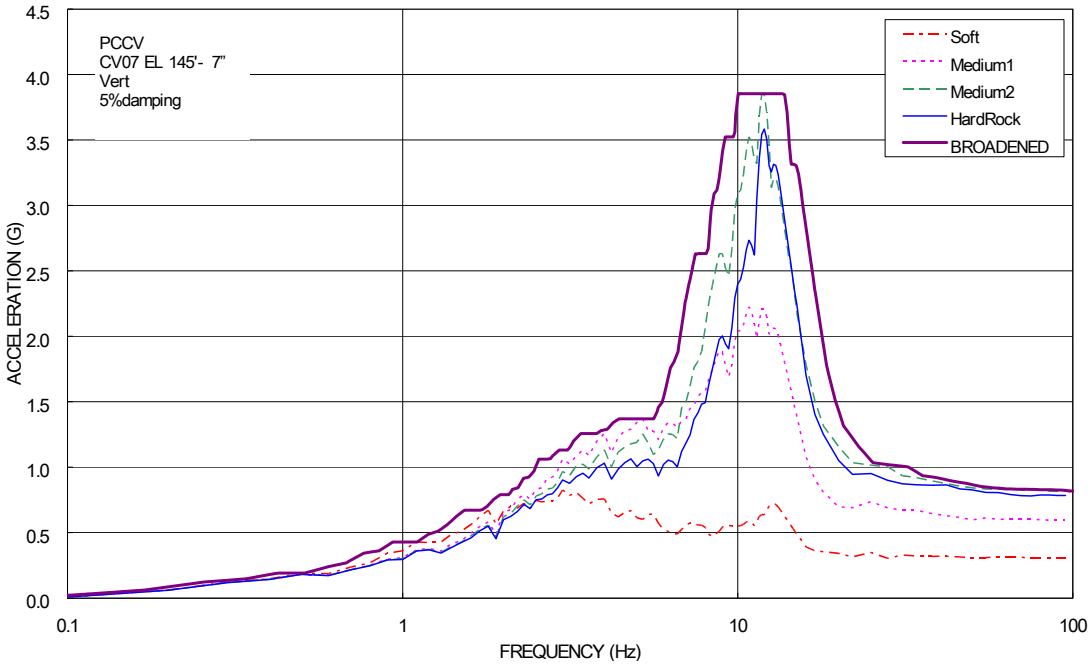

Figure 3I-3 ISRS of PCCV (Vertical - Direction)

(Sheet 7 of 31)

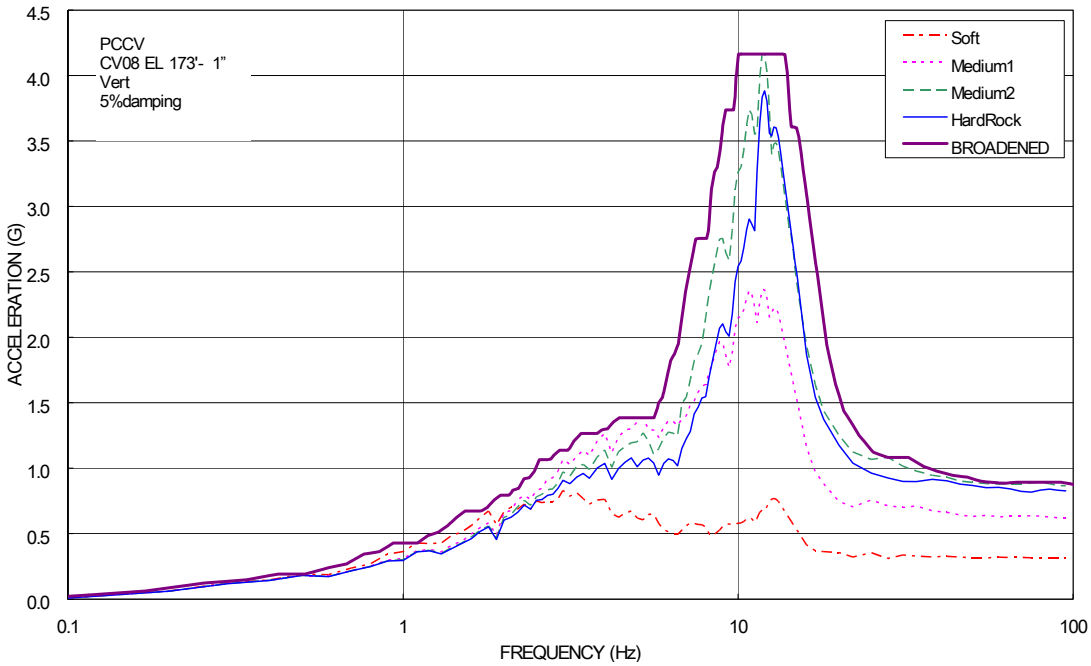

Figure 3I-3 ISRS of PCCV (Vertical - Direction)

(Sheet 8 of 31)

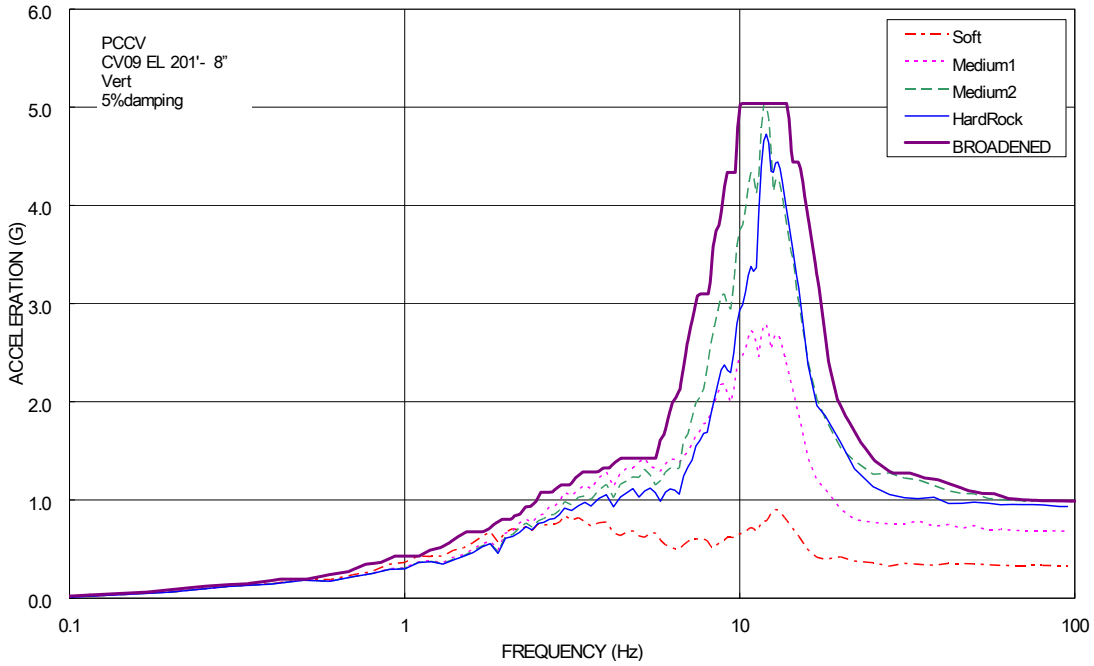

Figure 3I-3 ISRS of PCCV (Vertical - Direction)

(Sheet 9 of 31)

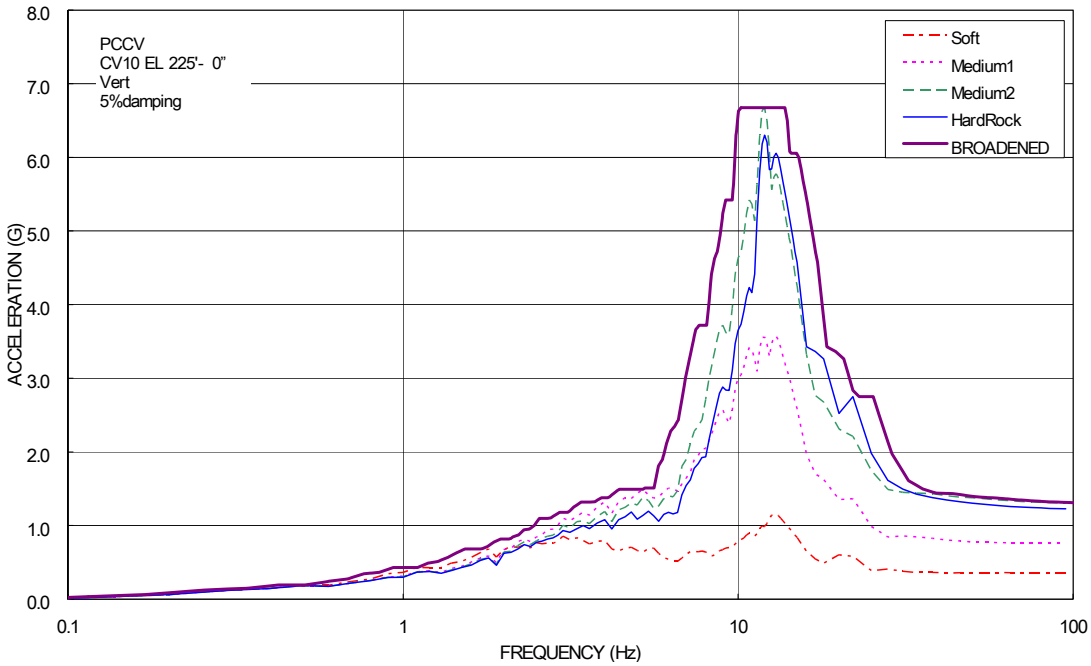

Figure 3I-3 ISRS of PCCV (Vertical - Direction)

(Sheet 10 of 31)

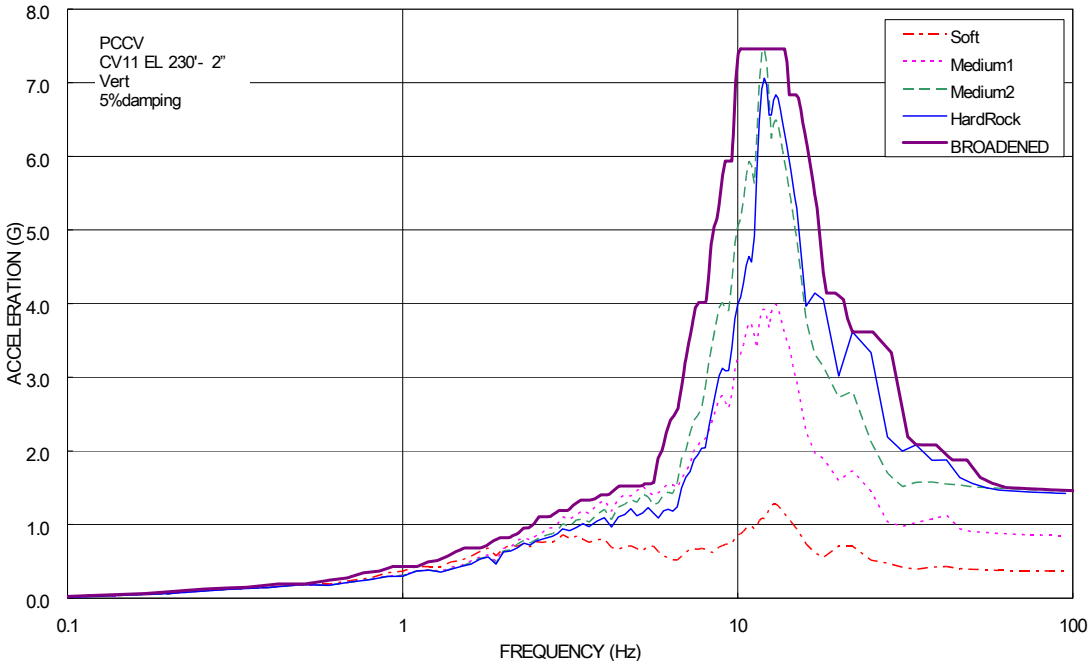

Figure 3I-3 ISRS of PCCV (Vertical - Direction)

(Sheet 11 of 31)

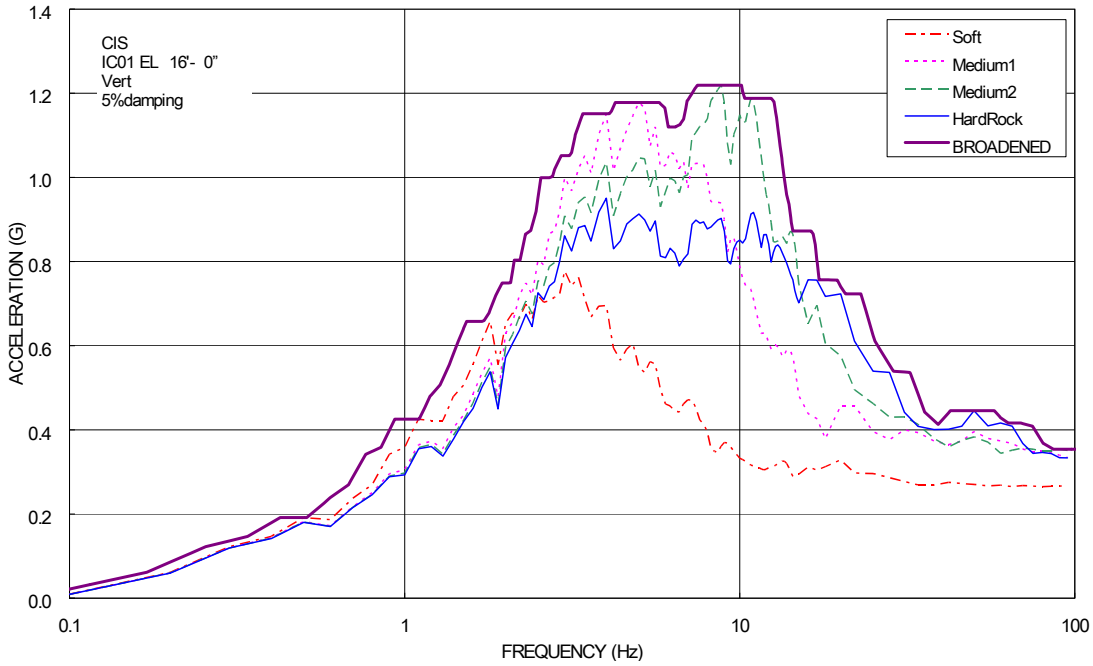

Figure 3I-3 ISRS of Containment Internal Structure (Vertical - Direction)

(Sheet 12 of 31)

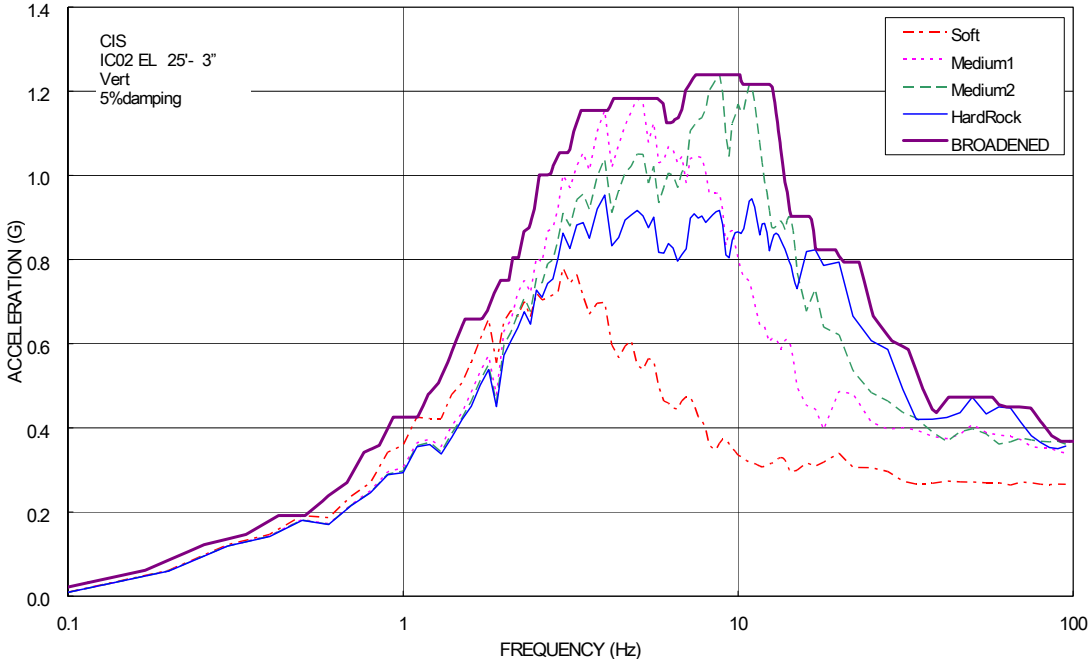

Figure 3I-3 ISRS of Containment Internal Structure (Vertical - Direction)

(Sheet 13 of 31)

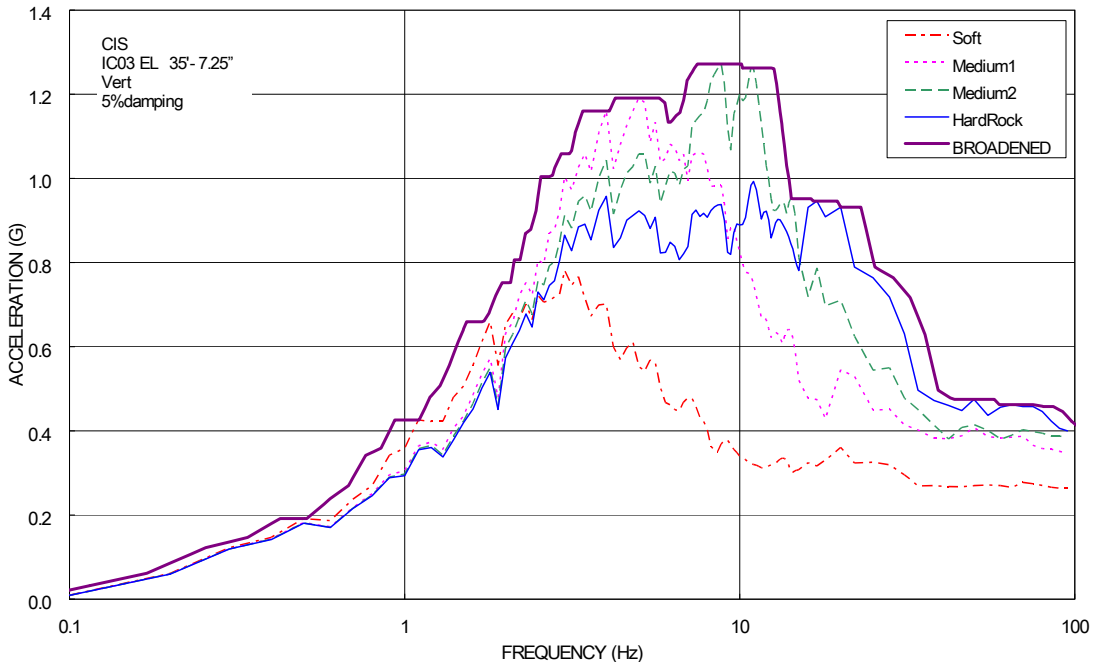

Figure 3I-3 ISRS of Containment Internal Structure (Vertical - Direction)

(Sheet 14 of 31)

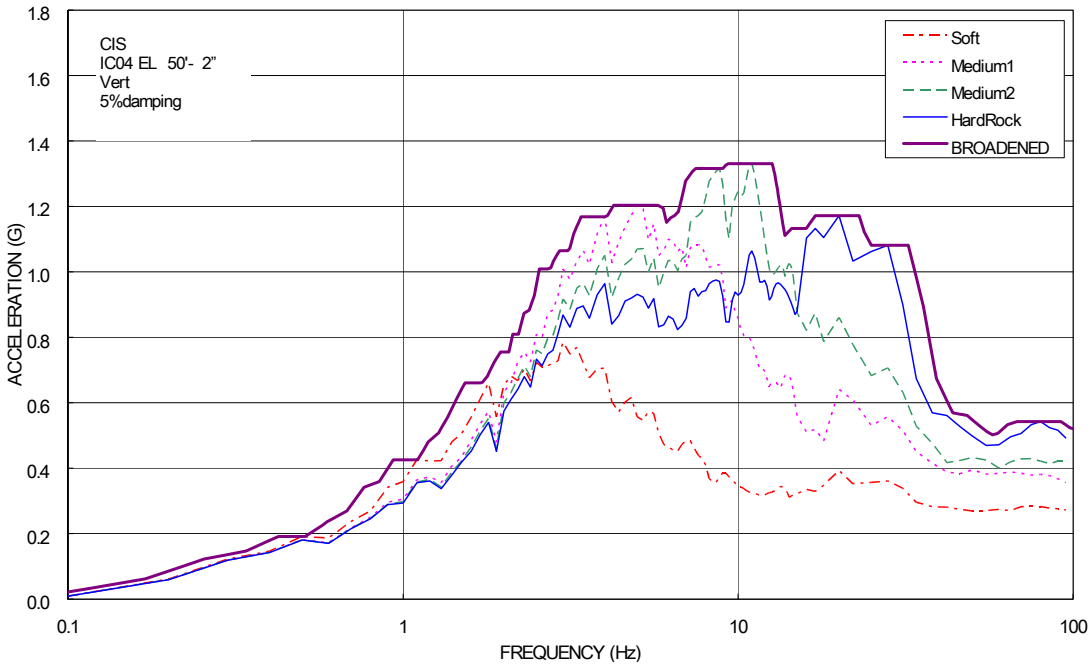

Figure 3I-3 ISRS of Containment Internal Structure (Vertical - Direction)

(Sheet 15 of 31)

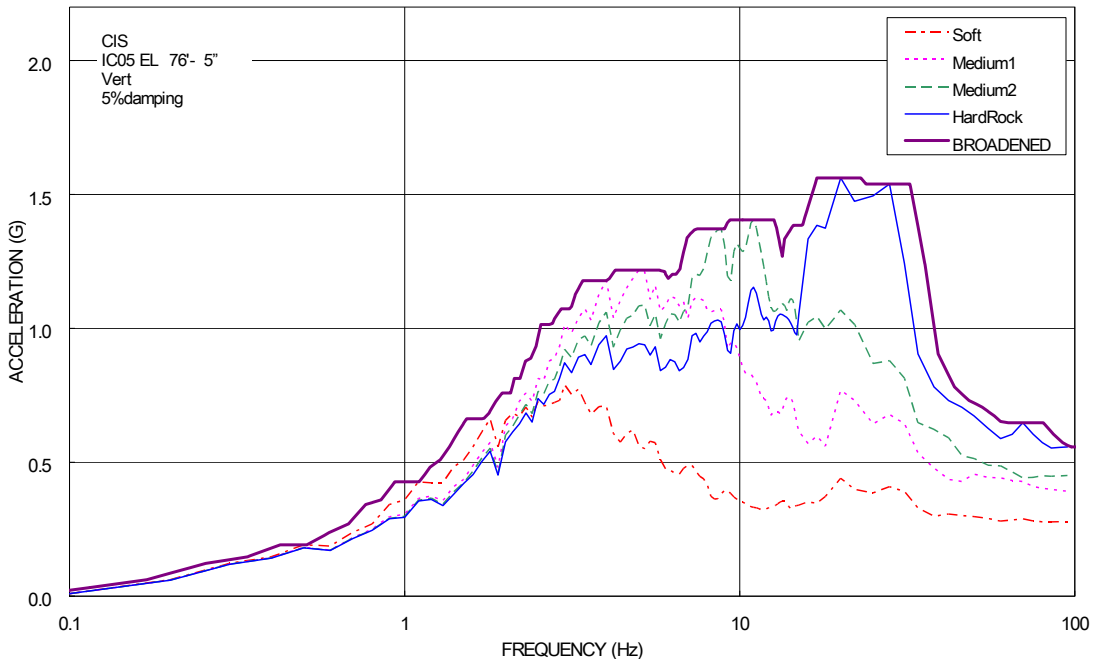

Figure 3I-3 ISRS of Containment Internal Structure (Vertical - Direction)

(Sheet 16 of 31)

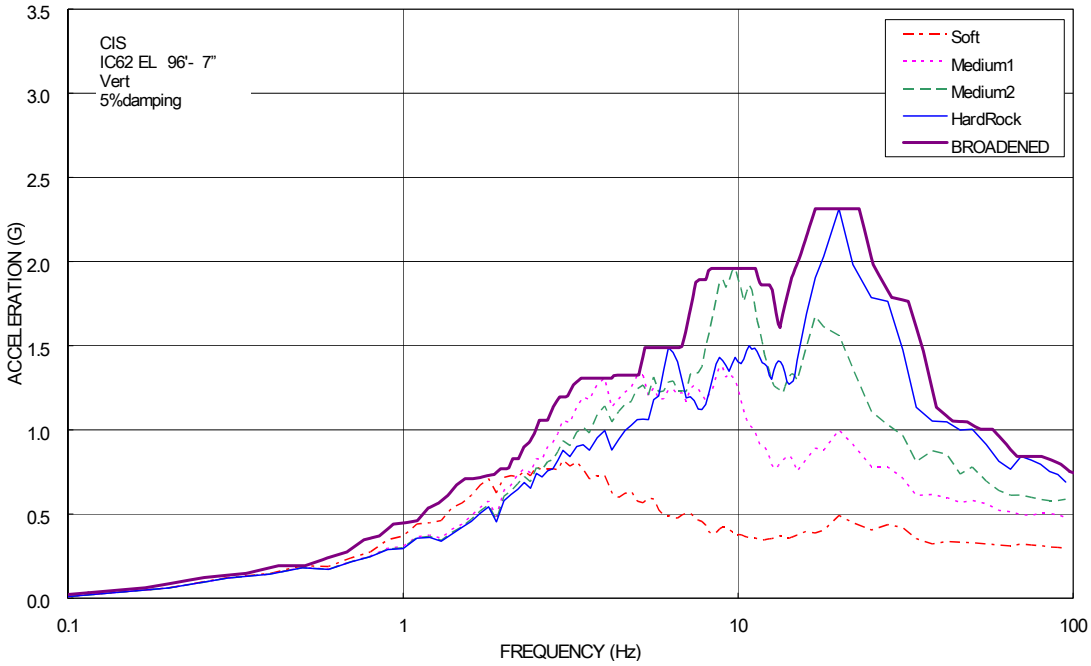

Figure 3I-3 ISRS of Containment Internal Structure (Vertical - Direction)

(Sheet 17 of 31)

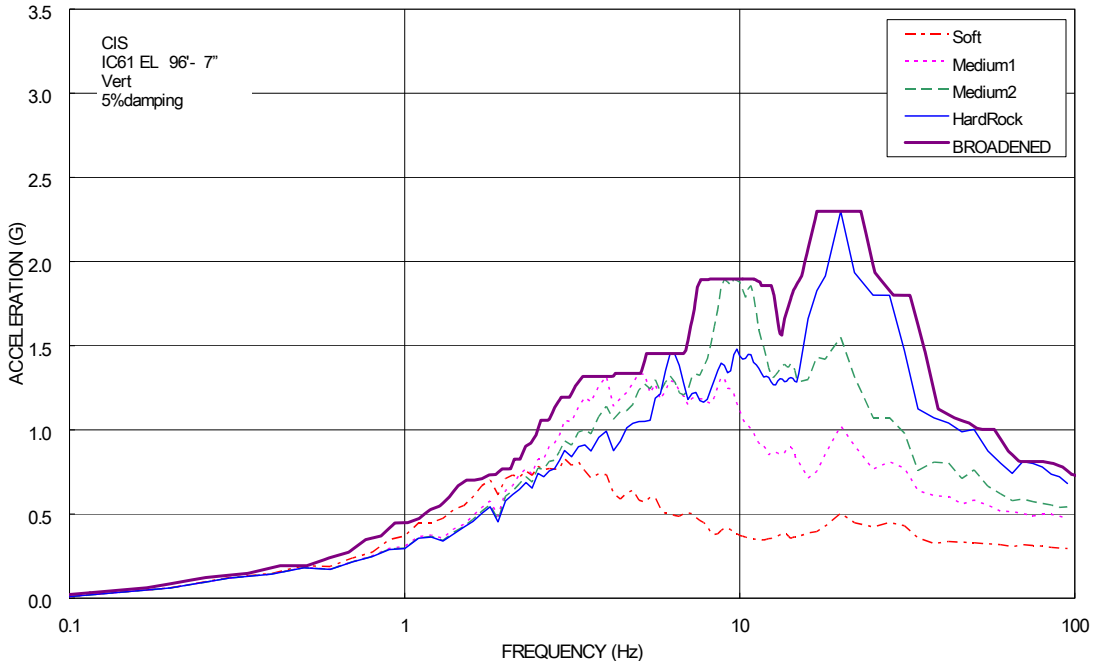

Figure 3I-3 ISRS of Containment Internal Structure (Vertical - Direction)

(Sheet 18 of 31)

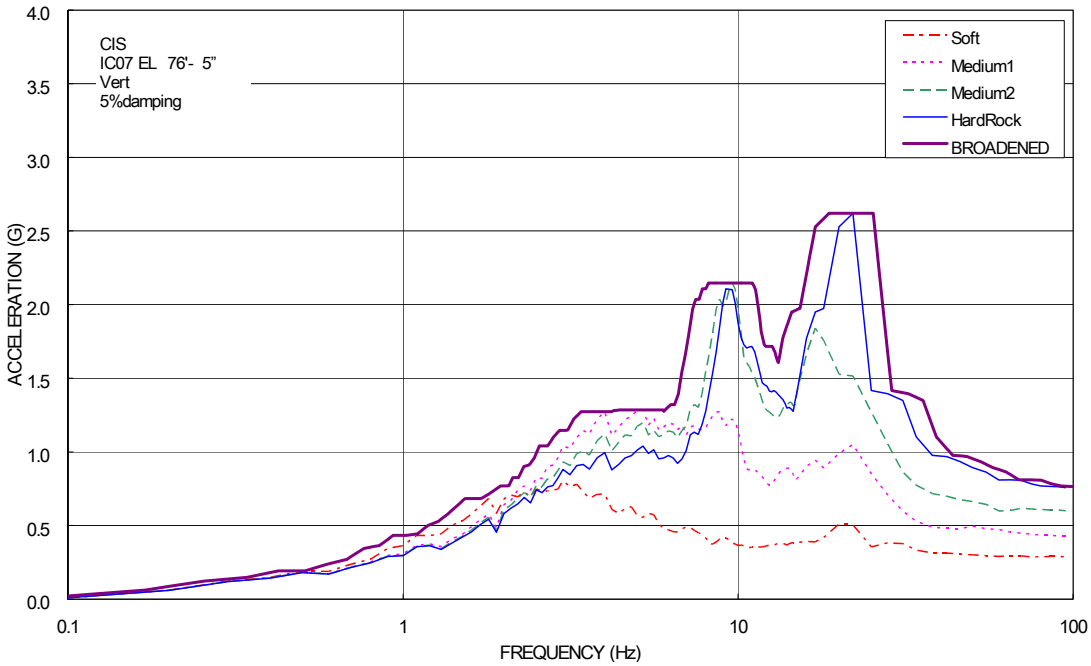

Figure 3I-3 ISRS of Containment Internal Structure (Vertical - Direction)

(Sheet 19 of 31)

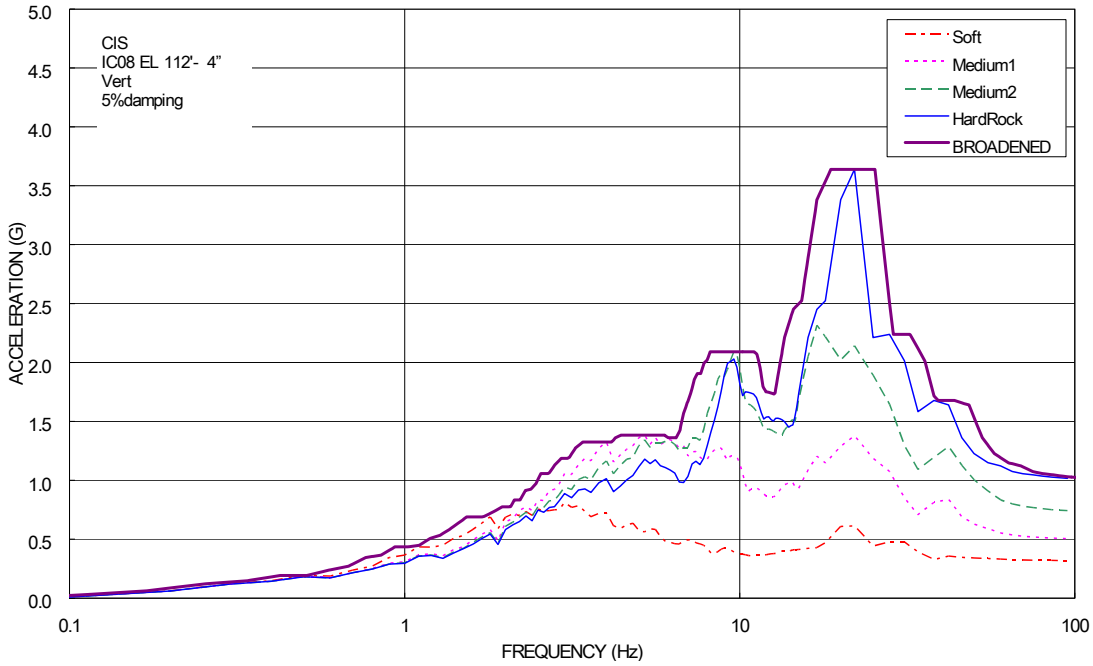

Figure 3I-3 ISRS of Containment Internal Structure (Vertical - Direction)

(Sheet 20 of 31)

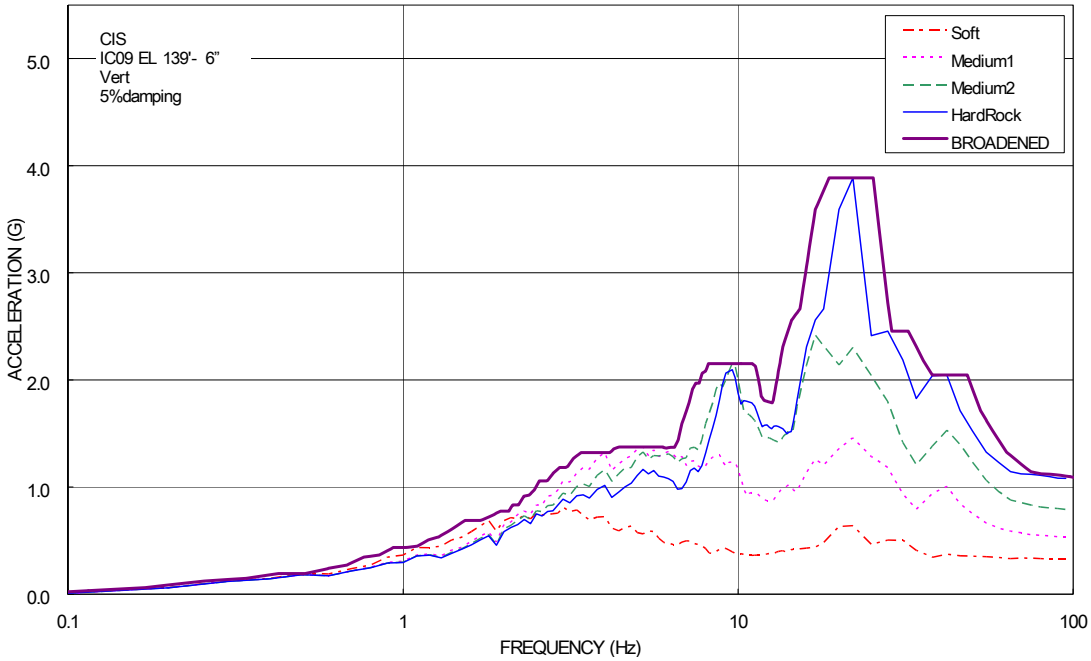

Figure 3I-3 ISRS of Containment Internal Structure (Vertical - Direction)

(Sheet 21 of 31)

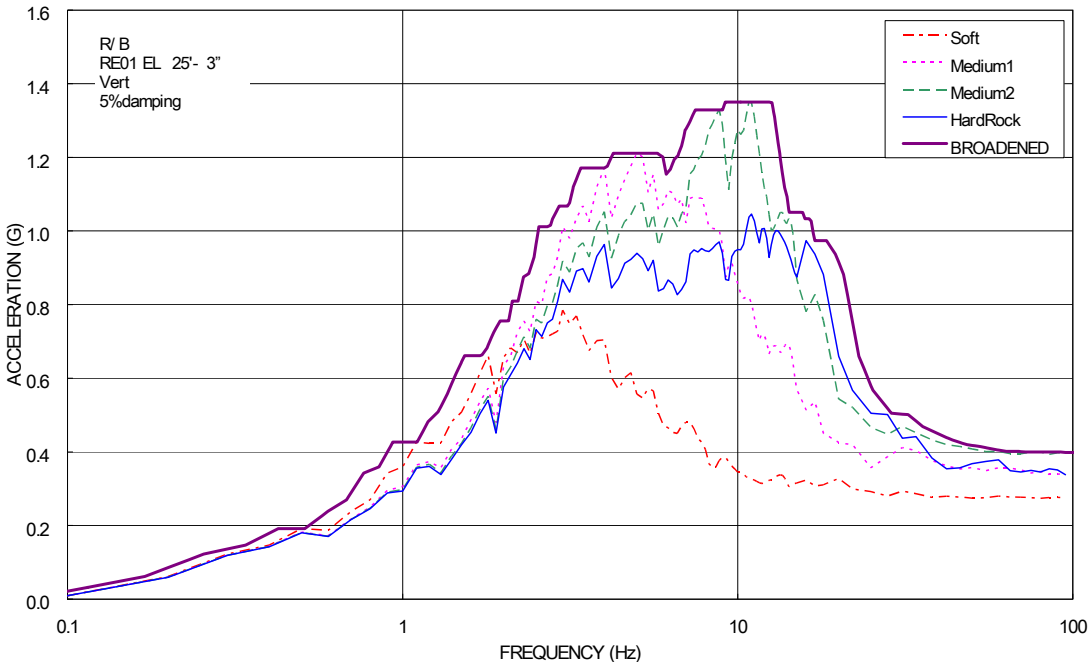

Figure 3I-3 ISRS of R/B (Vertical - Direction)

(Sheet 22 of 31)

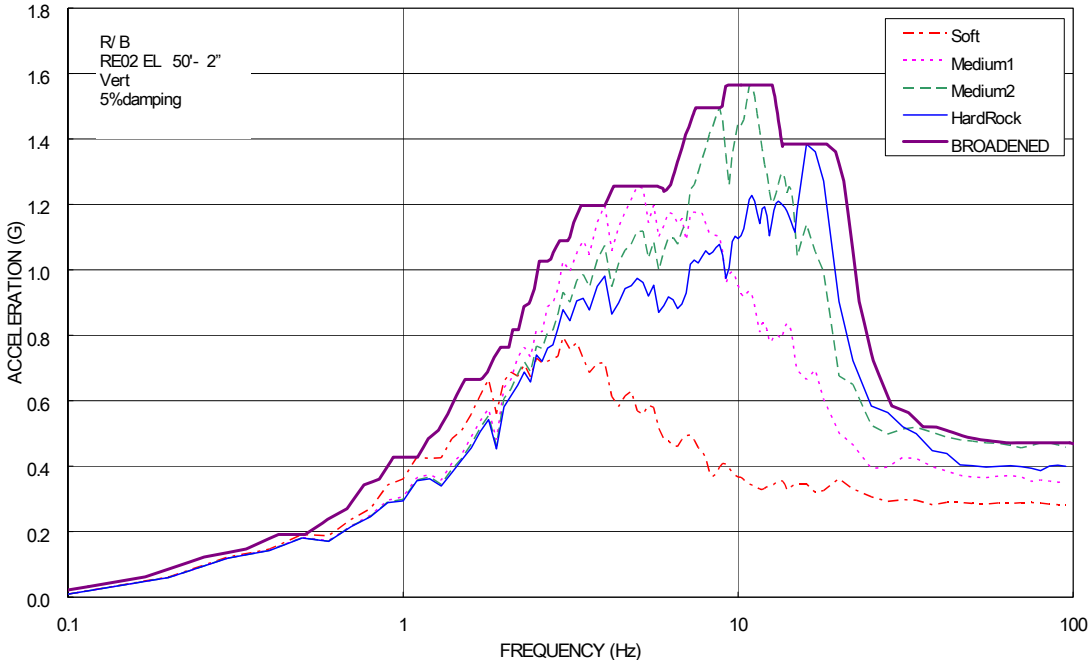

Figure 3I-3 ISRS of R/B (Vertical - Direction)

(Sheet 23 of 31)

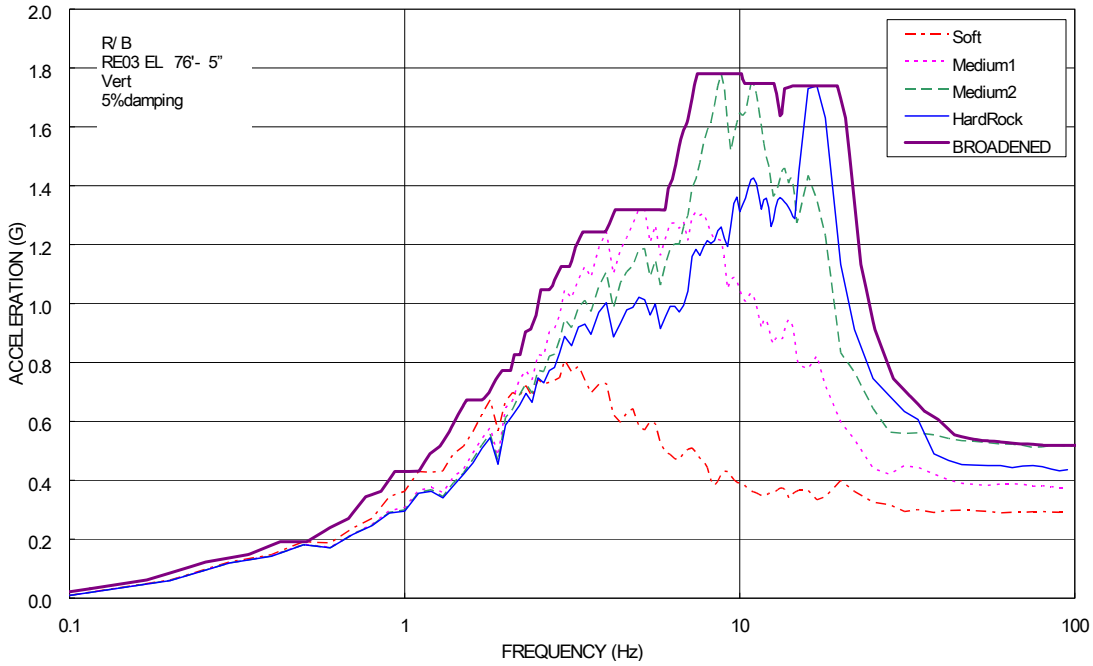

Figure 3I-3 ISRS of R/B (Vertical - Direction)

(Sheet 24 of 31)

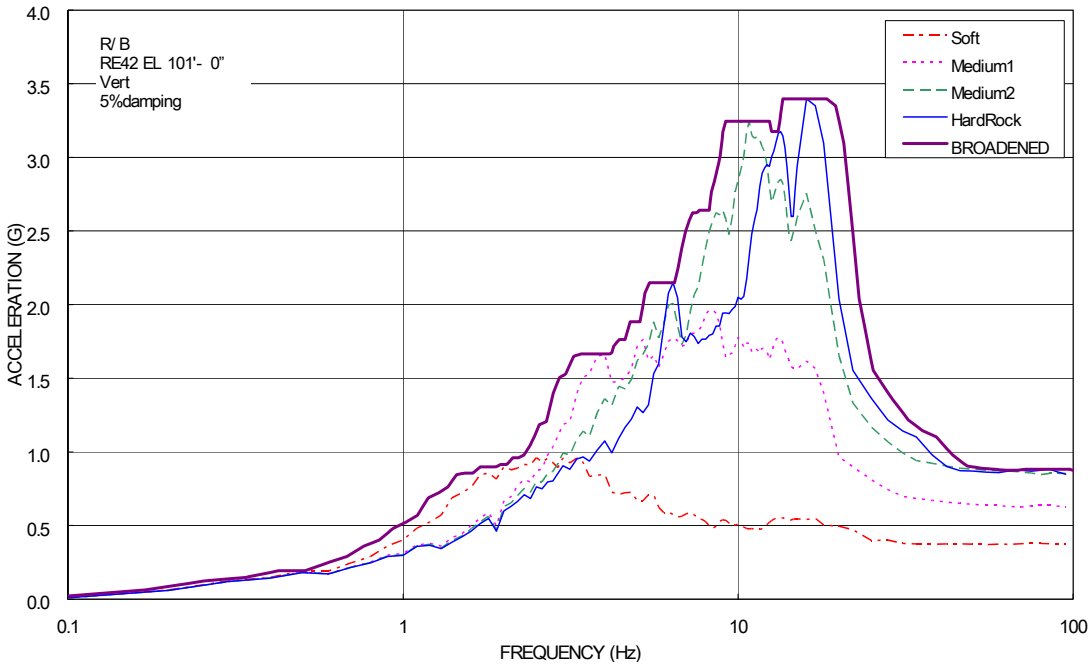

Figure 3I-3 ISRS of R/B (Vertical - Direction)

(Sheet 25 of 31)

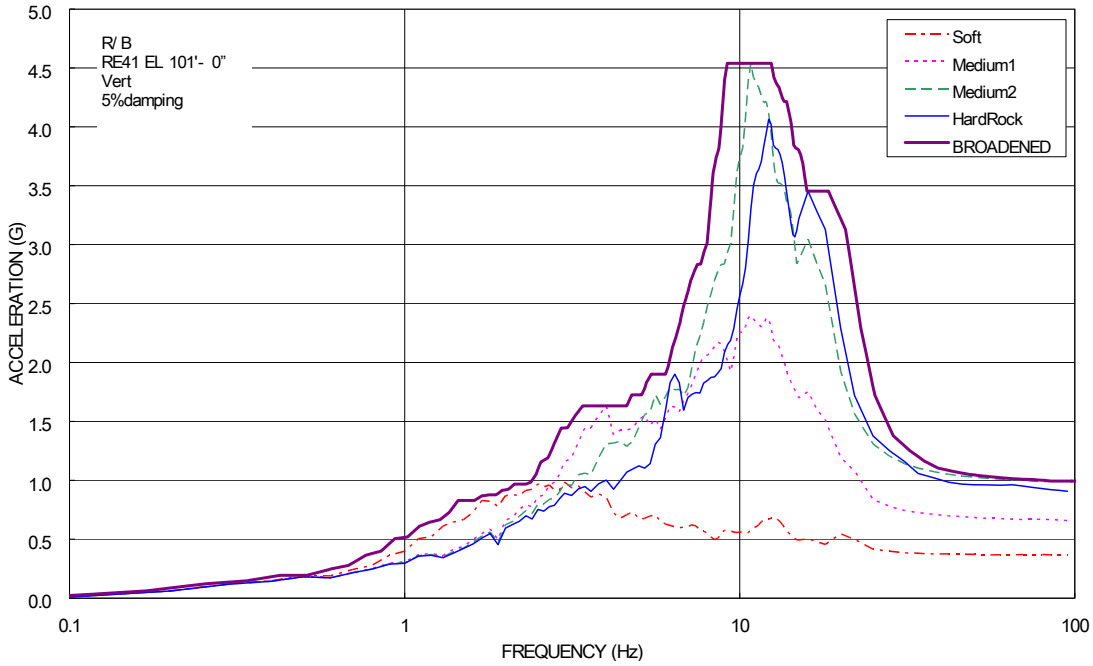

Figure 3I-3 ISRS of R/B (Vertical - Direction)

(Sheet 26 of 31)

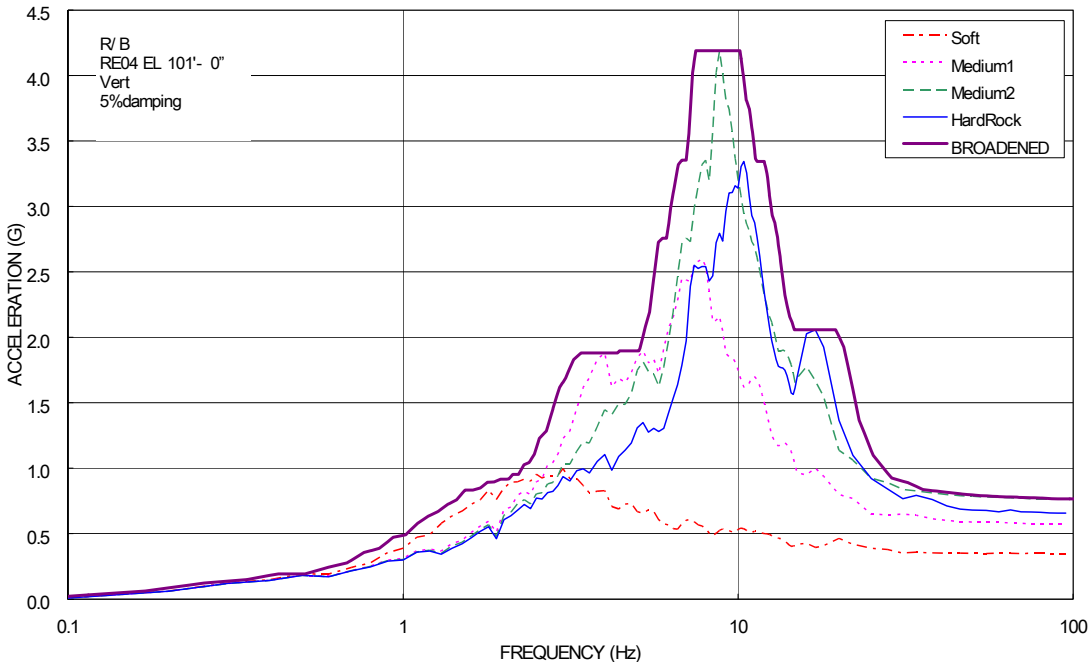

Figure 3I-3 ISRS of R/B (Vertical - Direction)

(Sheet 27 of 31)

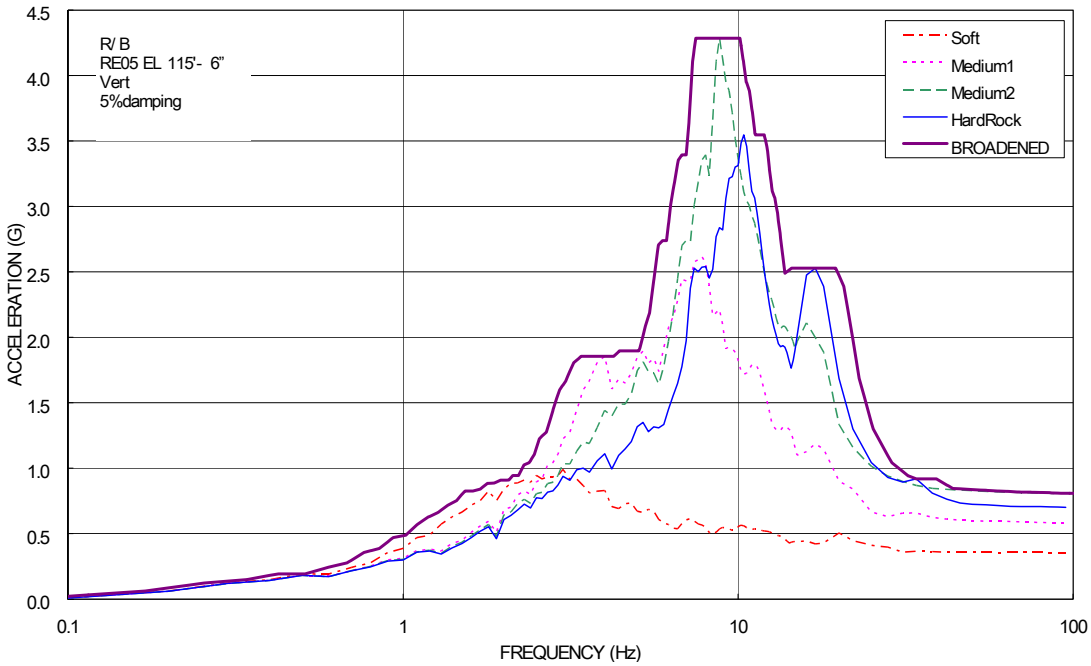

Figure 3I-3 ISRS of R/B (Vertical - Direction)

(Sheet 28 of 31)

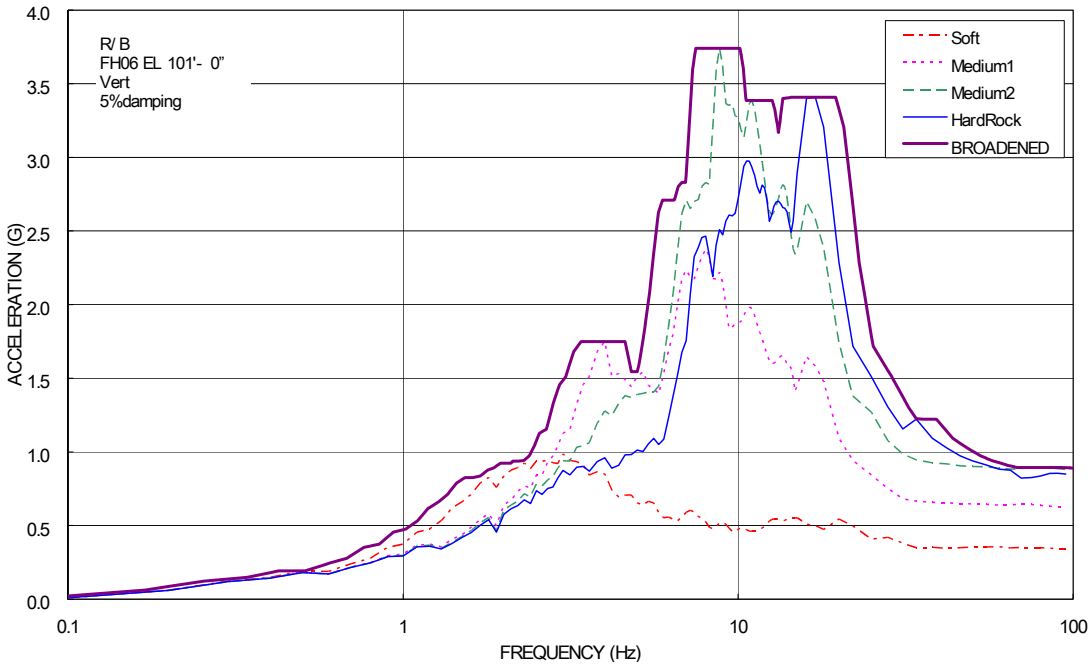

Figure 3I-3 ISRS of R/B (Vertical - Direction)

(Sheet 29 of 31)

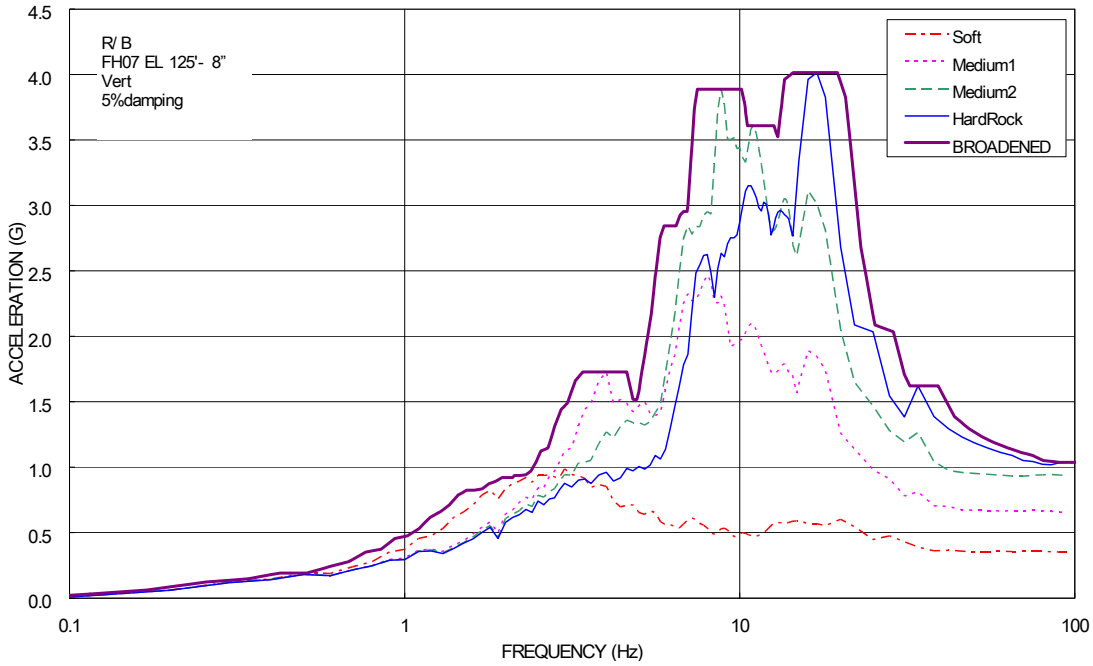

Figure 3I-3 ISRS of R/B (Vertical - Direction)

(Sheet 30 of 31)

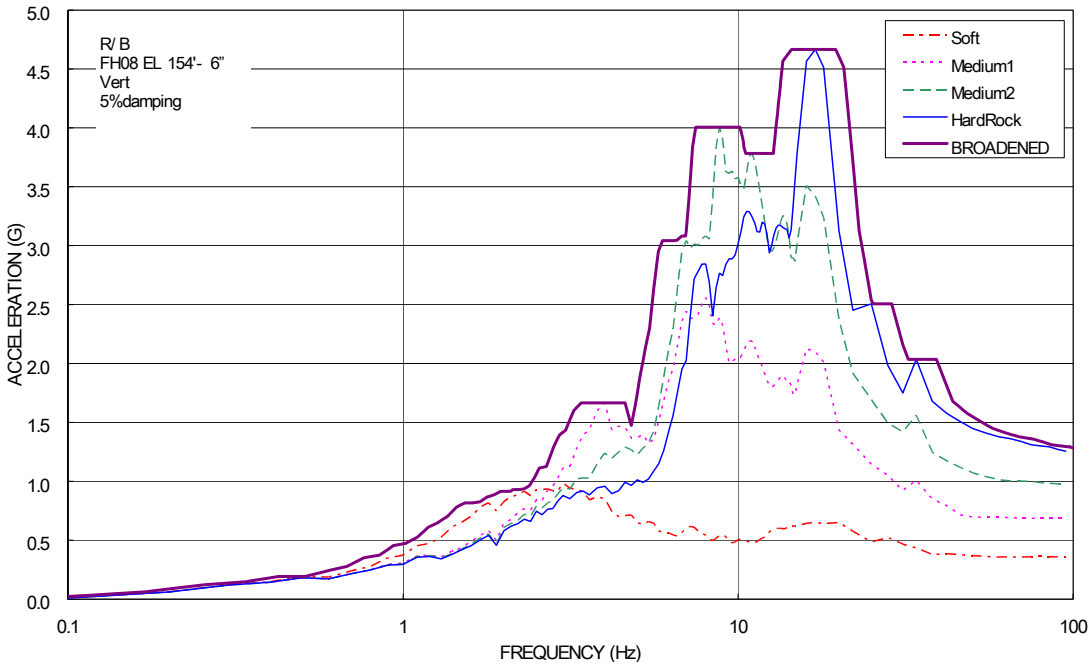

Figure 3I-3 ISRS of R/B (Vertical - Direction)

(Sheet 31 of 31)

APPENDIX 3J

REACTOR, POWER SOURCE AND CONTAINMENT INTERNAL STRUCTURAL DESIGN

CONTENTS

Page

3J Reactor, Power Source and Containment Internal Structural Design

3J.1 Introduction 3J-1

FIGURES

Figure 3J-1 R/B Structural Drawings 3J-2

Figure 3J-2 Containment Internal Structure Drawings 3J-16

Figure 3J-3 PS/B East Structural Drawings 3J-26

Figure 3J-4 PS/B West Structural Drawings 3J-27

ACRONYMS AND ABBREVIATIONS

R/B	reactor building
PS/B	power source building

3J Reactor, Power Source and Containment Internal Structural Design

3J.1 Introduction

This appendix provides the structural drawings for the reactor building (R/B), containment internal structure, and the east and west power source buildings (PS/Bs) for the US-APWR.

~~Security Related Information – Withhold Under 10 CFR 2.390~~

Figure 3J-1 R/B Structural Drawings
(Sheet 1 of 14)

~~Security Related Information – Withhold Under 10 CFR 2.390~~

Figure 3J-1 R/B Structural Drawings
(Sheet 2 of 14)

~~Security Related Information – Withhold Under 10 CFR 2.390~~

Figure 3J-1 R/B Structural Drawings
(Sheet 3 of 14)

~~Security Related Information – Withhold Under 10 CFR 2.390~~

Figure 3J-1 R/B Structural Drawings
(Sheet 4 of 14)

~~Security Related Information – Withhold Under 10 CFR 2.390~~

Figure 3J-1 R/B Structural Drawings
(Sheet 5 of 14)

~~Security Related Information – Withhold Under 10 CFR 2.390~~

Figure 3J-1 R/B Structural Drawings
(Sheet 6 of 14)

~~Security Related Information – Withhold Under 10 CFR 2.390~~

Figure 3J-1 R/B Structural Drawings
(Sheet 7 of 14)

~~Security Related Information – Withhold Under 10 CFR 2.390~~

Figure 3J-1 R/B Structural Drawings
(Sheet 8 of 14)

~~Security Related Information – Withhold Under 10 CFR 2.390~~

Figure 3J-1 R/B Structural Drawings
(Sheet 9 of 14)

~~Security Related Information – Withhold Under 10 CFR 2.390~~

Figure 3J-1 R/B Structural Drawings
(Sheet 10 of 14)

~~Security Related Information – Withhold Under 10 CFR 2.390~~

Figure 3J-1 R/B Structural Drawings
(Sheet 11 of 14)

~~Security Related Information – Withhold Under 10 CFR 2.390~~

~~Security Related Information – Withhold Under 10 CFR 2.390~~

Figure 3J-1 R/B Structural Drawings
(Sheet 12 of 14)

~~Security Related Information – Withhold Under 10 CFR 2.390~~

Figure 3J-1 R/B Structural Drawings
(Sheet 13 of 14)

~~Security Related Information – Withhold Under 10 CFR 2.390~~

Figure 3J-1 R/B Structural Drawings
(Sheet 14 of 14)

~~Security-Related Information – Withhold Under 10 CFR 2.390~~

~~Security-Related Information – Withhold Under 10 CFR 2.390~~

Figure 3J-2 Containment Internal Structure Drawings (Sheet 1 of 10)

~~Security-Related Information – Withhold Under 10 CFR 2.390~~

Figure 3J-2 Containment Internal Structure Drawings (Sheet 2 of 10)

~~Security-Related Information – Withhold Under 10 CFR 2.390~~

Figure 3J-2 Containment Internal Structure Drawings (Sheet 3 of 10)

~~Security-Related Information – Withhold Under 10 CFR 2.390~~

~~Security-Related Information – Withhold Under 10 CFR 2.390~~

Figure 3J-2 Containment Internal Structure Drawings (Sheet 4 of 10)

~~Security-Related Information – Withhold Under 10 CFR 2.390~~

Figure 3J-2 Containment Internal Structure Drawings (Sheet 5 of 10)

~~Security-Related Information – Withhold Under 10 CFR 2.390~~

Figure 3J-2 Containment Internal Structure Drawings (Sheet 6 of 10)

~~Security-Related Information – Withhold Under 10 CFR 2.390~~

~~Security-Related Information – Withhold Under 10 CFR 2.390~~

Figure 3J-2 Containment Internal Structure Drawings (Sheet 7 of 10)

~~Security-Related Information – Withhold Under 10 CFR 2.390~~

~~Security-Related Information – Withhold Under 10 CFR 2.390~~

Figure 3J-2 Containment Internal Structure Drawings (Sheet 8 of 10)

~~Security-Related Information – Withhold Under 10 CFR 2.390~~

~~Security-Related Information – Withhold Under 10 CFR 2.390~~

Figure 3J-2 Containment Internal Structure Drawings (Sheet 9 of 10)

~~Security-Related Information – Withhold Under 10 CFR 2.390~~

Figure 3J-2 Containment Internal Structure Drawings (Sheet 10 of 10)

~~Security-Related Information – Withhold Under 10 CFR 2.390~~

~~Security-Related Information – Withhold Under 10 CFR 2.390~~

Figure 3J-3 PS/B East Structural Drawings

~~Security Related Information – Withhold Under 10 CFR 2.390~~

~~Security Related Information – Withhold Under 10 CFR 2.390~~

Figure 3J-4 PS/B West Structural Drawings