21.0 REFERENCES

21.1 ASME Boiler and Pressure Vessel Code - Section XI through Summer 1975 addenda, Summer 1976 addenda.

21.2 ASME Boiler and Pressure Vessel Code - Section V through Summer 1975 addenda.

21.3 Instruction Manual - 173-inch I.D. Reactor Pressure Vessel - Rotterdam Dockyard Company, Contract No. 71C62-54114-1, N3M-2-3.

21.4 Watts Bar Nuclear Plant Administrative Instruction 3.

21.5 Watts Bar Nuclear Plant Final Safety Analysis Report.

21.6 Westinghouse Technical Manual - Pressurizer, TM 1440-C225, Contract No. 71C60-54114-1, N3M-2-6.

21.7 Westinghouse Technical Manual - Vertical Steam Generators, TM 1440-C254, Contract No. 71C62-54114-1, N3M-2-4.

21.8 Westinghouse Instruction Manual - Auxiliary Heat Exchangers, Contract No. 71C62-54114-1, N3M-2-30.

21.9 Westinghouse Instruction Book - Reactor Coolant Pump, Contract No. 71C62-54114-1, N3M-2-5.

21.10 Ingersoll-Rand Instruction Manual - Residual Heat Removal Pumps, Contract No. 71C62-54114-1, N3M-2-30.

21.11 Watts Bar Nuclear Plant Operational Quality Assurance Manual, Part II, Section 5.1.

21.12 Division Procedure Manual N80E3, N75C01, and N76A10.

TABLE 7.6

TVA Safety Class B Components Exempt From Examination

System	Reference Drawings	Boundary of Exempted Components	*Basis for Exemption
CVC (62)	47W809-1	All Components from the 8" RWST pump supply line to the centrifugal charging pumps 1A-A and 1B-B and up to the 4" line leading to the reciprocating charging pump 1C.	1
SIS (63)	47W811-1 47W810-1 47W812-1	All components from and including the refueling water storage tank, FCV-63-8 and FCV-63-1 to LCV-62-135, LCV-62-136, to the supply side of the SIS pumps 1A-A and 1B-B, FCV-63-1, HCV-74-34, FCV-72-21, and FCV-72-22.	1
		All components from the containment sump to FCV-63-72, FCV-63-73, FCV-72-44, and FCV-72-45.	1
CS(72)	47W812-1	All components from valves FCV-72-2, 39, 40, and 41 to and including the ring headers	1
		All components from valves 72-503 and 72-504 through the containment spray test line to the RWST.	1

TABLE 7.6 (Continued)

TVA Safety Class B Components Exempt From Examination

System	Reference Drawings	Boundary of Exempted Components	*Basis for Exemption
CS(72)	47W812-1	All components from valves FCV-72-21, 22, 44, and 45 to the suction side of the containment spray pumps 1A-A and 1B-B	1
		All components from the discharge of the containment spray pumps 1A-A and 1B-B to valves FCV-72-2, FCV-72-39, 72-503, and 72-504.	2

*NOTES:

(1) Components in systems where both the design pressure and temperature are equal to or less than 275 psig and 200 F, respectively,

(2) Components in systems or portions of sytems, other than emergency core cooling systems, which do not function during normal reactor operation,

TABLE A
WATTS BAR PRESERVICE INSPECTION PROGRAM - CLASS A COMPONENTS

Component	*Program Reference Section	Item No. From Table IWB-2600, Section XI	Examination Category From Table IWB-2600, Section XI	Method of Inspection	Reference Drawing No.
A. Reactor Vessel					
1. Circumferential Shell Welds-Beltline Region	6.1.1.1	B1.1	B-A	UT	
2. Circumferential Shell Weld	6.1.1.2	B1.2	B-B	UT	
3. Lower Head Welds	6.1.1.3	B1.2	B-B	UT	
4. Closure Head Circumferential Weld	6.1.1.4	B1.2	B-B	UT	
5. Vessel-to-Flange and Head-to-Flange Welds	6.1.1.5	B1.3	B-C	UT	
6. Nozzle-to-Vessel Welds and Inside Radiused Sections	6.1.2	B1.4	B-D	UT	
7. Vessel Penetrations and Attachments	6.1.3	B1.5	B-E	VT	
8. Nozzle-to-Safe End Welds	6.1.4	B1.6	B-F	UT, PT	
9. Closure Studs and Nuts	6.1.5	B1.8	B-G-1	UT, MT	
10. Ligaments Between Threaded Stud Holes	6.1.5	B1.9	B-G-1	UT	
11. Closure Washers	6.1.5	B1.10	B-G-1	VT	
12. Closure Head Cladding	6.1.7	B1.13	B-I-1	PT, VT	

*See Section 6.0 for additional information.

TABLE A
WATTS BAR PRESERVICE INSPECTION PROGRAM - CLASS A COMPONENTS

Component	*Program Reference Section	Item No. From Table IWB-2600, Section XI	Examination Category From Table IWB-2600, Section XI	Method of Inspection	Reference Drawing No
A. Reactor Vessel (Continued)					
13. Vessel Cladding	6.1.7	B1.14	B-1-1	VT	
14. Vessel Interior	6.1.8	B1.15	B-N-1	VT	
15. Removable Core-Support Structures	6.1.8	B1.17	B-N-3	VT	
16. Control Rod Drive Housings	6.1.9	B1.18	B-O	UT	
17. Auxiliary Head Adapter	6.1.10	B4.1, B4.5	B-F, B-J	UT, PT	
B. Pressurizer					
1. Longitudinal and Circumferential Welds	6.2.1	B2.1	B-B	UT	
2. Nozzle-to-Vessel Welds and Inside Radiused Sections	6.2.2	B2.2	B-D	UT	
3. Heater Penetrations	6.2.3	B2.3	B-E	VT	
4. Nozzle-to-Safe End Welds	6.2.4	B2.4	B-F	UT, PT	
5. Pressure-Retaining Bolting	6.2.5	B2.11	B-G-2	VT	
6. Integrally-Welded Vessel Support	6.2.6	B2.8	B-H	UT	
7. Vessel Cladding	6.2.7	B2.9	B-I-2	VT	

*See Section 6.0 for additional information.

TABLE A
WATTS BAR PRESERVICE INSPECTION PROGRAM - CLASS A COMPONENTS

Component	*Program Reference Section	Item No. From Table IWB-2600, Section XI	Examination Category From Table IWB-2600, Section XI	Method of Inspection	Reference Drawing No
C. Steam Generators					
1. Primary Head-to-Tube Sheet Weld	6.3.1	B3.1	B-B		
2. Primary Nozzle Inside Radiused Sections	6.3.2	B3.2	B-D	N/A	
3. Primary Nozzle-to-Safe End Welds	6.3.3	B3.3	B-F	UT, PT	
4. Pressure-Retaining Bolting	6.3.4	B3.10	B-G-2	VT	
5. Vessel Cladding	6.3.6	B3.8	B-I-2	VT	
6. Tubing	6.3.7	N/A	N/A	ET	
D. Piping					
1. Circumferential Welds	6.4.1	B4.5	B-J	UT	
2. Longitudinal Welds	6.4.1	B4.5	B-J	UT	
3. Branch Pipe Connection Welds	6.4.2	B4.6	B-J	UT	
4. Branch Pipe Connection Welds	6.4.2	B4.7	B-J	PT	
5. Socket Welds	6.4.3	B4.8	B-J	PT	
6. Integrally-Welded Supports	6.4.4	B4.9	B-K-1	UT	

*See Section 6.0 for additional information.

TABLE A
WATTS BAR PRESERVICE INSPECTION PROGRAM - CLASS A COMPONENTS

Component	*Program Reference Section	Item No. From Table IWB-2600, Section XI	Examination Category From Table IWB-2600, Section XI	Method of Inspection	Reference Drawing No.
D. Piping (Continued)					
7. Support Components	6.4.5	B4.10	B-K-2	VT	
8. Pressure-Retaining Bolting	6.4.6	B4.12	B-G-2	VT	
E. Reactor Coolant Pumps					
1. Pressure-Retaining Bolting	6.5.1	B5.1	B-G-1	UT	
2. Pressure-Retaining Bolting	6.5.1	B5.2	B-G-1	UT, PT or MT	
3. Pressure-Retaining Bolting	6.5.1	B5.3	B-G-1	VT	
4. Pressure-Retaining Bolting	6.5.1	B5.9	B-G-2	VT	
5. Support Components	6.5.3	B5.5	B-K-2	VT	
6. Casing Welds	6.5.4	B5.6	B-L-1	PT	
7. Casings	6.5.5	B5.7	B-L-2	VT	
8. Flywheel	6.5.6	N/A	N/A	UT, PT	
F. Valves					
1. Pressure-Retaining Bolting	6.6.1	B6.9	B-G-2	VT	

*See Section 6.0 for additional information.

TABLE A
WATTS BAR PRESERVICE INSPECTION PROGRAM - CLASS A COMPONENTS

Component	*Program Reference Section	Item No. From Table IWB-2600, Section XI	Examination Category From Table IWB-2600, Section XI	Method of Inspection	Reference Drawing No
F. Valve (Continued)					
2. Integrally-Welded Supports	6.6.2	B6.4	B-K-1	UT	
3. Support Components	6.6.3	B6.5	B-K-2	VT	
4. Valve Bodies	6.6.5	B6.7	B-M-2	VT	
G. Exempted Components	6.7	B1.19 B2.10 B3.9 B4.11 B5.8 B6.8	B-P	VT	

*See Section 6.0 for additional information.

TABLE B

WATTS BAR PRESERVICE INSPECTION PROGRAM - CLASS B COMPONENTS

Component	*Program Reference Section	Examination Category Item No. From Table IWC-2600, Section XI	From Table IWC-2600, Section XI	Method of Inspection	Reference Drawing No
A. Steam Generators					
1. Circumferential Welds	7.1.1	C1.1	C-A	UT	
2. Nozzle-to-Vessel Welds	7.1.2	C1.2	C-B	UT	
B. Residual Heat Removal Heat Exchangers					
1. Circumferential Welds	7.2.1	C1.1	C-A	UT	
2. Nozzle-to-Vessel Welds	7.2.2	C1.2	C-B	UT	
3. Integrally-Welded Supports	7.2.3	C1.3	C-C	PT	
C. Piping					
1. Circumferential Welds	7.3.1	C2.1	C-F, C-G	UT	
2. Longitudinal Welds	7.3.2	C2.2	C-F, C-G	UT	
3. Branch Pipe Connection Welds	7.3.3		C-F, C-G	UT	
4. Integrally-Welded Supports	7.3.5	C2.5	C-E-1	PT or MT	
5. Support Components	7.3.6	C2.6	C-E-2	VT	

*See Section 7.0 for additional information.

TABLE B

WATTS BAR PRESERVICE INSPECTION PROGRAM - CLASS B COMPONENTS

Component	*Program Reference Section	Item No. From Table IWC-2600, Section XI	Examination Category From Table IWC-2600, Section XI	Method of Inspection	Reference Drawing No
D. **Residual Heat Removal Pumps**					
1. Support Components	7.4.4	C3.4	C-E-2	VT	
E. **Valves**					
1. Integrally-Welded Supports	7.5.3	C4.3	C-E-1	PT or MT	
2. Support Components	7.5.4	C4.4	C-E-2	VT	
F. **Exempted Components**	7.6	N/A	N/A	VT	

*See Section 7.0 for additional information.

DATA SHEET 1

The Nuclear Power QA Staff Baseline and Inservice Inspection Section representative shall sign-off the applicable portions of this data sheet when the examination requirements of Sections 6.0, 7.0, 8.0, and 9.0 of this program have been completed.

EXAMINATION SECTION	QA STAFF REPRESENTATIVE	DATE
Class A Components		
Reactor Vessel		
6.1.1.1		
6.1.1.2		
6.1.1.3		
6.1.1.4		
6.1.1.5		
6.1.2		
6.1.3		
6.1.4		
6.1.5		
6.1.7		
6.1.8		
6.1.9		
6.1.10		
Pressurizer		
6.2.1		
6.2.2		
6.2.3		
6.2.4		
6.2.5		
6.2.6		
6.2.7		
Steam Generators		
6.3.1		
6.3.2		
6.3.3		
6.3.4		
6.3.6		
6.3.7		

DATA SHEET 1 (Cont'd)

EXAMINATION SECTION	QA STAFF REPRESENTATIVE	DATE
Class A Components (Continued)		
Piping		
6.4.1		
6.4.2		
6.4.3		
6.4.4		
6.4.5		
6.4.6		
RCP		
6.5.1		
6.5.2		
6.5.3		
6.5.4		
6.5.5		
6.5.6		
Valves		
6.6.1		
6.6.2		
6.6.3		
6.6.5		
Class B Components		
Steam Generators		
7.1.1		
7.1.2		
RHRHX		
7.2.1		
7.2.2		
7.2.3		
PIPING		
7.3.1		
7.3.2		
7.3.3		
7.3.5		
7.3.6		

DATA SHEET 1 (cont'd)

EXAMINATION SECTION	QA STAFF REPRESENTATIVE	DATE
Class B Components (Continued)		
RHRP		
7.4.4		
Valves		
7.5.3		
7.5.4		

All examinations required by the referenced sections of this data sheet have been performed and acceptance criteria has been satisfied.

_____ _____
Inspection Section Representative Date

Reviewed by: _____ _____
Inspection Section Supervisor, Date

Reviewed By: _____ _____
Supervisor, Programs and Procedures Date

Approved by: _____ _____
Supervisor, Baseline and Inservice Inspection Group Date

APPENDIX D

NOTIFICATION OF INDICATION
Part I - Findings

Examination Report No. _____ Plant/Unit _____

Weld Map Number _____ Examination Performed _____

Description of Indication: (Attach Sketch/Photograph)

_____

_____

_____

_____

_____

Signature of Examiner/Certif. Level _____
Date

Signature of Field Supervisor (Contractor) _____
Date

Inspection Section Representative _____
Date

PART II - Disposition

_____

_____

_____

_____

_____

_____

_____

Disposition Approved by TVA Level III Examiner _____
Date

Verification of Completed Corrective Action

_____

_____

Signature _____ Date _____
Inspection Section
Representative

TABLE C

LIST OF DRAWINGS -UNIT #1

REACTOR VESSEL

DRAWING NO.	TITLE	APPENDIX A PAGE NO.
CH-M-2549-A	Reactor Vessel Closure Head	2
CH-M-2551-A	Reactor Vessel	3-9
CH-M-2684-C	Upperhead Penetrations	10
CH-M-2685-B	Auxiliary Head Adapter	11
ISI-0012-A	Control Rod Drive Housing	12
	REACTOR COOLANT PUMPS	
ISI-0048-B	Reactor Coolant Pump Casing Weld Locations	
CHM-2672-B	RCP Main Flange Bolt Circle	
	PRESSURIZER	
CH-M-2570	Pressurizer	13-16
	STEAM GENERATORS	
CH-M-2660-B	Steam Generator	17-18
	RESIDUAL HEAT REMOVAL HEAT EXCHANGERS	
CH-M-2662	Residual Heat Removal Heat Exchanger Channel Welds	19
ISI-0053-B	Boron Injection Tank Weld Locations	
	PIPING AND VALVE WELD MAPS	
CH-M-2547-B	Reactor Coolant Piping	20
CH-M-2636-C	Residual Heat Removal	21-27
CH-M-2669-C	Mainsteam	28-31
CH-M-2671-C	Feedwater	32-39
CH-M-2758-C	Safety Injection	40-49
ISI-0004-C	Upperhead Injection	50-53
ISI-0005-C	Chemical and Volume Control	54
ISI-0017-C	Reactor Coolant System	55-60
ISI-0050-C	CVCS Seal Water Injection	

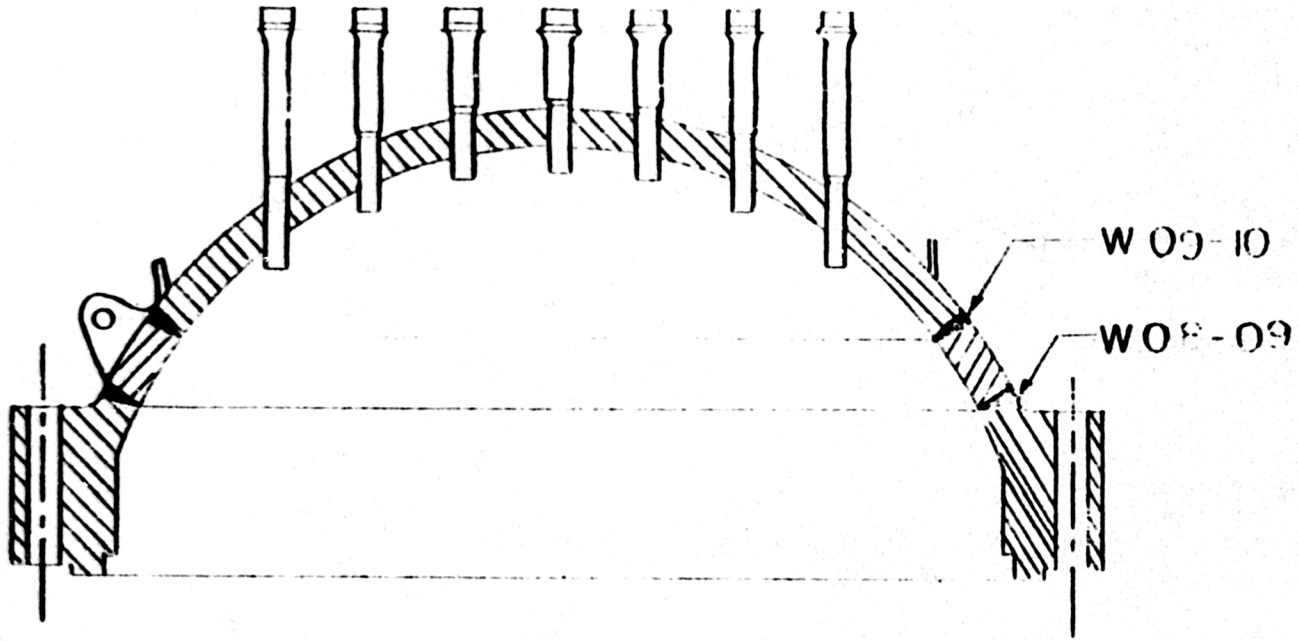

WBNP
TI-50A
APPENDIX A
PAGE 2 OF 80
REV. 7

TENNESSEE VALLEY AUTHORITY
DIVISION OF POWER PRODUCTION

WATTS BAR NUCLEAR PLANT
UNITS #1 & #2
REACTOR VESSEL
CLOSURE HEAD

NTS
RAS

APPROVED 10-2-78
chief

TVA 6690-A (PP 2-60)

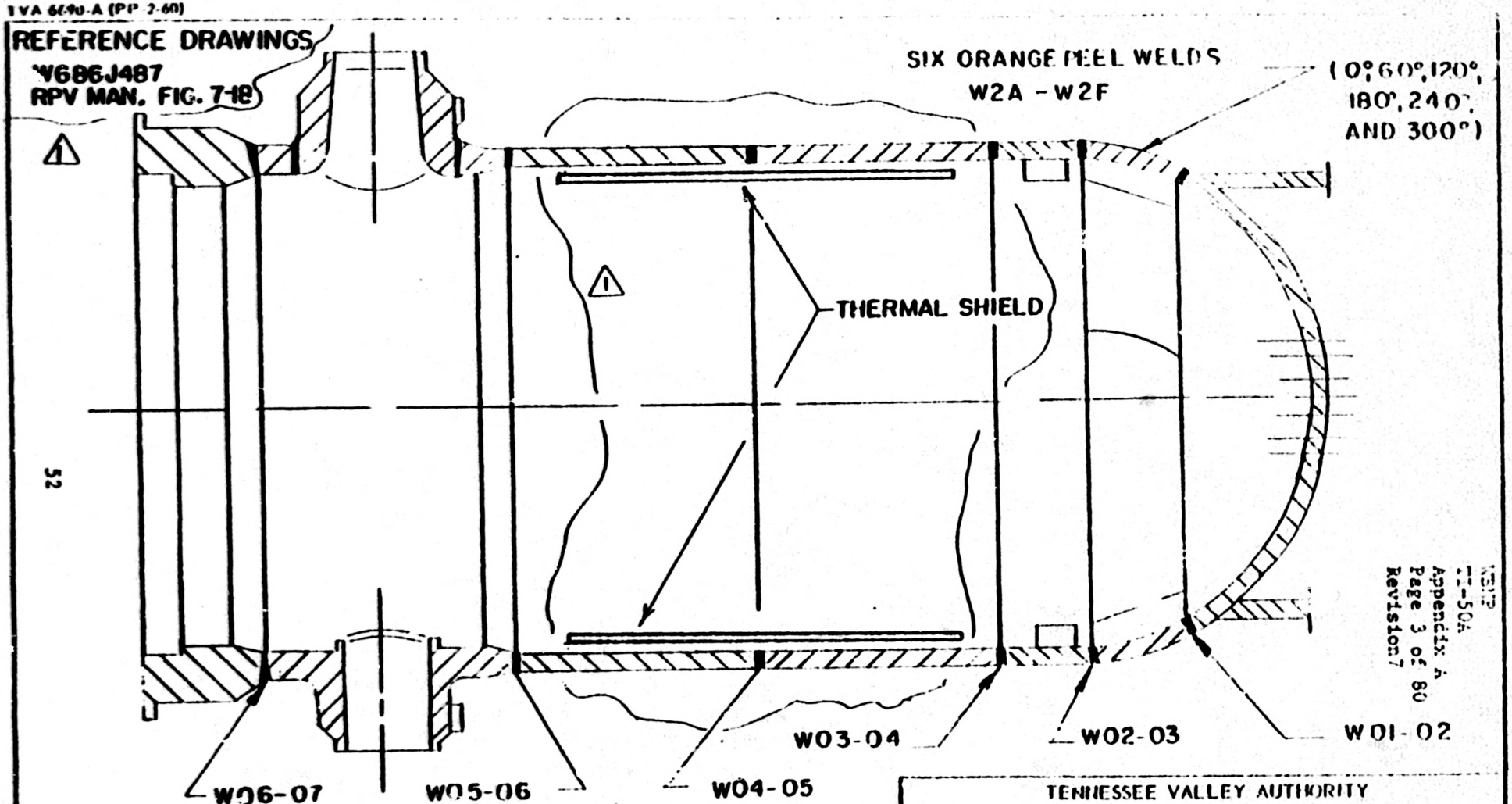

NO.	DATE	REVISIONS	CK'D	APP'D
1	4-7-82	ADD THERMAL SHIELD AND REF. DWGS		

TENNESSEE VALLEY AUTHORITY
DIVISION OF POWER PRODUCTION

WATTS BAR NUCLEAR PLANT
UNITS #1 & #2
REACTOR VESSEL
(SEAM WELDS)

SCALE: NTS
DRAWN
TRACED: RAS
CHECKED:
SUBMITTED
APPROVED
DATE 10-3-78

NEDO
11-506
Appendix A
Page 3 of 80
Revision 7

NOTES:
1. FOR PENETRATION DETAIL SEE SHEET 3

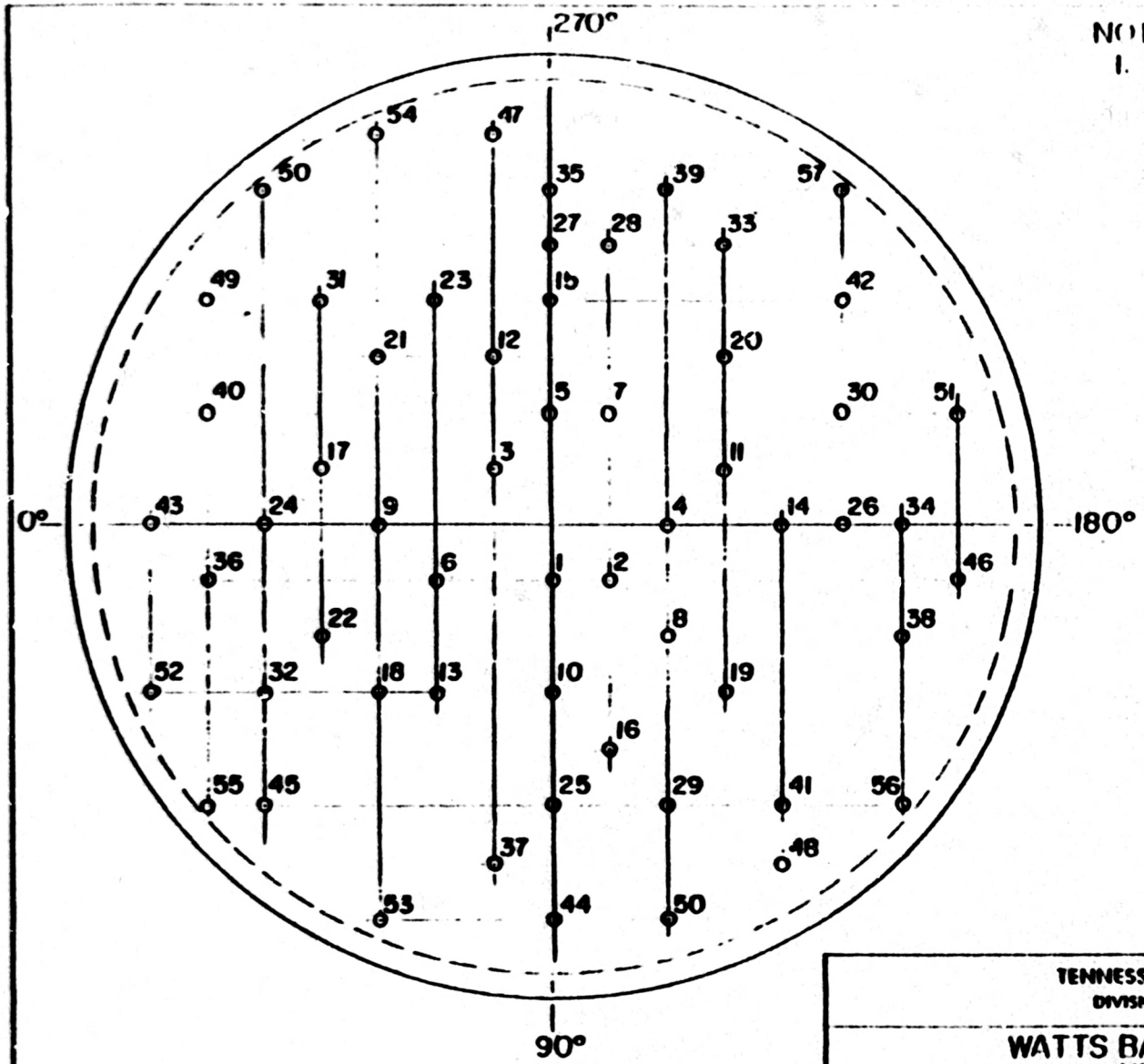

TENNESSEE VALLEY AUTHORITY
DIVISION OF NUCLEAR POWER

WATTS BAR NUCLEAR PLANT
UNITS #1 & #2
REACTOR VESSEL
(BOTTOM HEAD PENETRATIONS)

SCALE NTS DRAWN HV TRACED CHECKED	SUBMITTED	APPROVED	DATE 12/23/80 SHEET 2 OF 7 SHEETS CH-M-2-51-A

WBNP
TI-50A
APPENDIX A
PAGE 7 OF 30
REV. 7

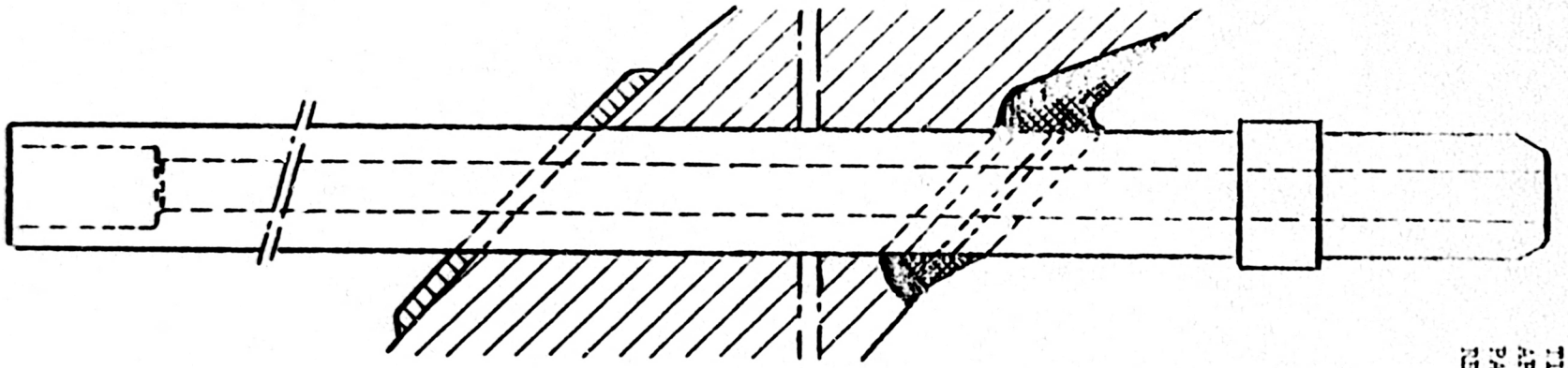

TI-506
APPENDIX A
PAGE 5 OF 50
REV. 7

TENNESSEE VALLEY AUTHORITY
DIVISION OF NUCLEAR POWER

WATTS BAR NUCLEAR PLANT
UNITS #1 & #2
REACTOR VESSEL
(BOTTOM HEAD PENETRATION DETAIL)

SCALE NTS DRAWN TRACED KEV CHECKED	SUBMITTED	APPROVED	DATE 12/24/80 SHEET 3 OF 7 SHEETS CDR 1 2 3 4 5 6

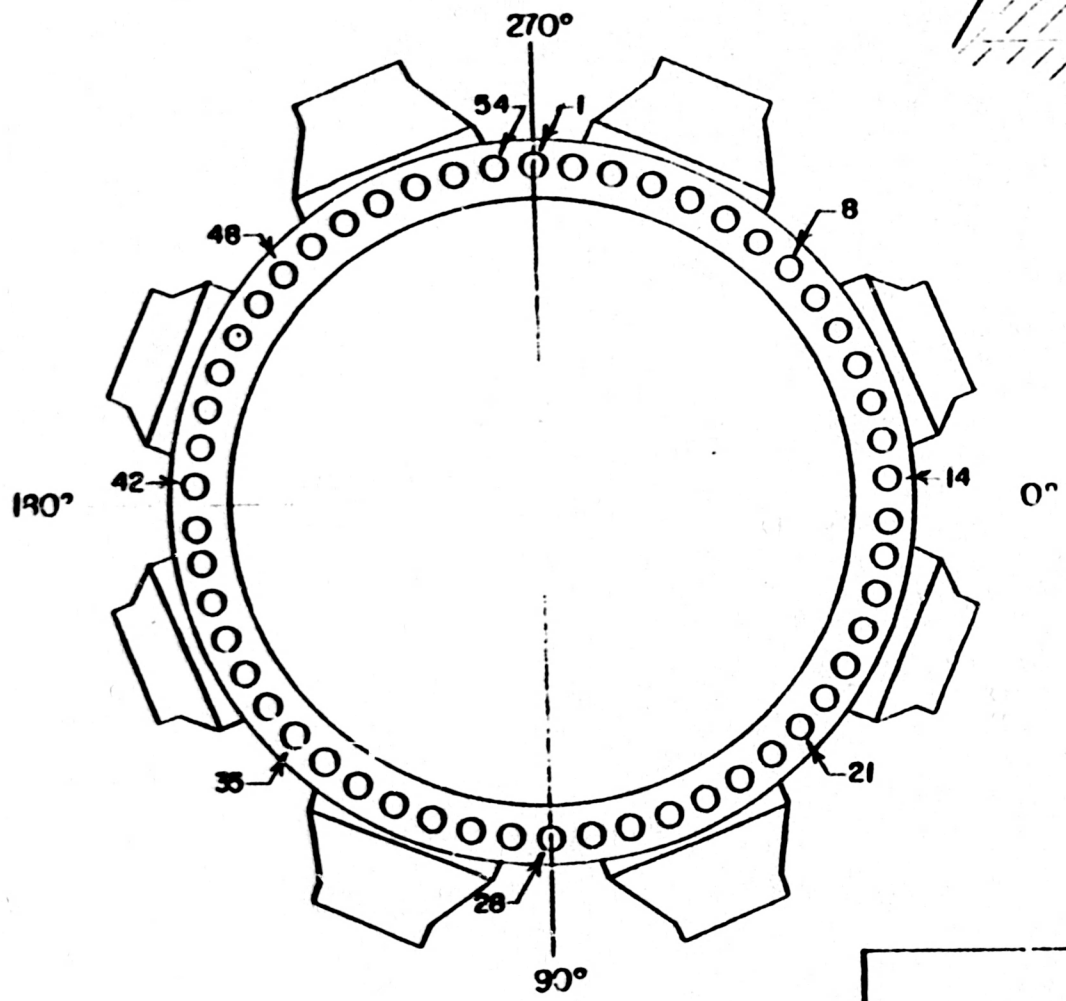

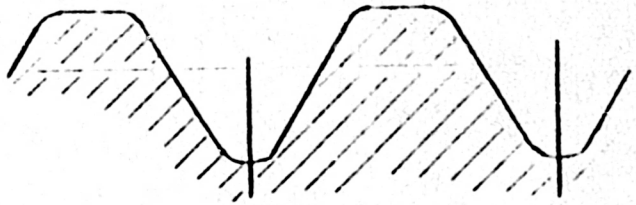

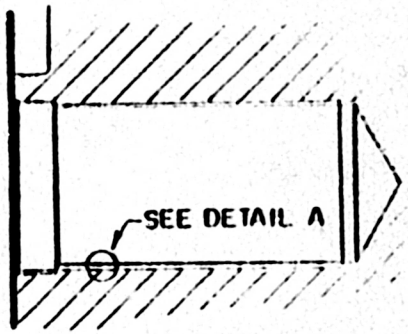

DETAIL OF STUD HOLE

TENNESSEE VALLEY AUTHORITY
DIVISION OF NUCLEAR POWER

WATTS BAR NUCLEAR PLANT
UNITS #1 & #2
REACTOR VESSEL
(BOLTING PATTERN)

SCALE NTS
DRAWN
TRACED KEV
CHECKED

SUBMITTED

APPROVED

DATE 12/24/80
SHEET 1 OF 1 SHEETS

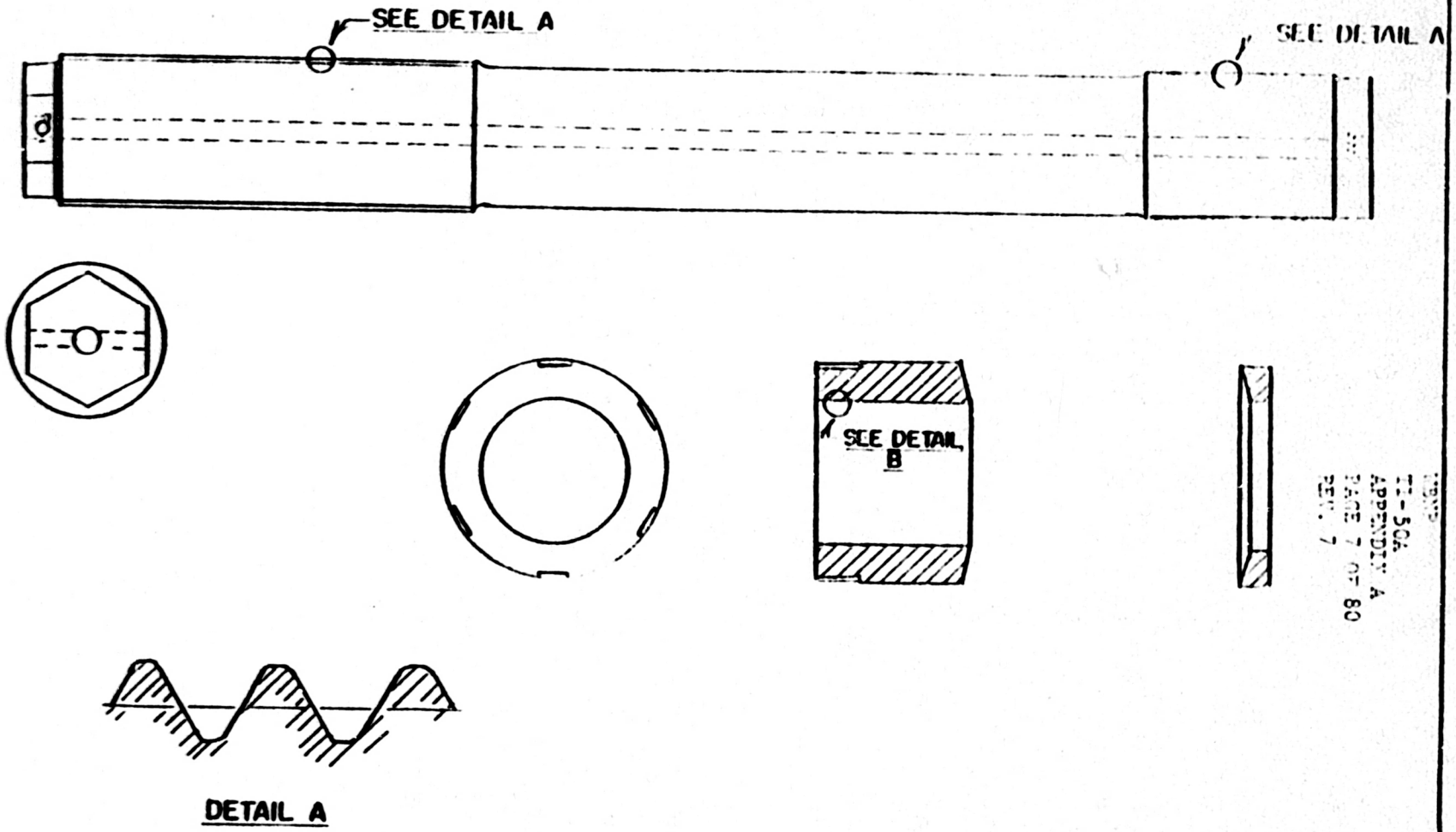

TENNESSEE VALLEY AUTHORITY
DIVISION OF NUCLEAR POWER

WATTS BAR NUCLEAR PLANT
UNITS #1 & #2
REACTOR VESSEL
(CLOSURE STUDS, NUTS, AND WASHERS)

SCALE NTS
DRAWN
TRACED KLV
CHECKED

SUBMITTED

APPROVED

DATE 12/24/80
SHEET 5 OF 7 SHEETS

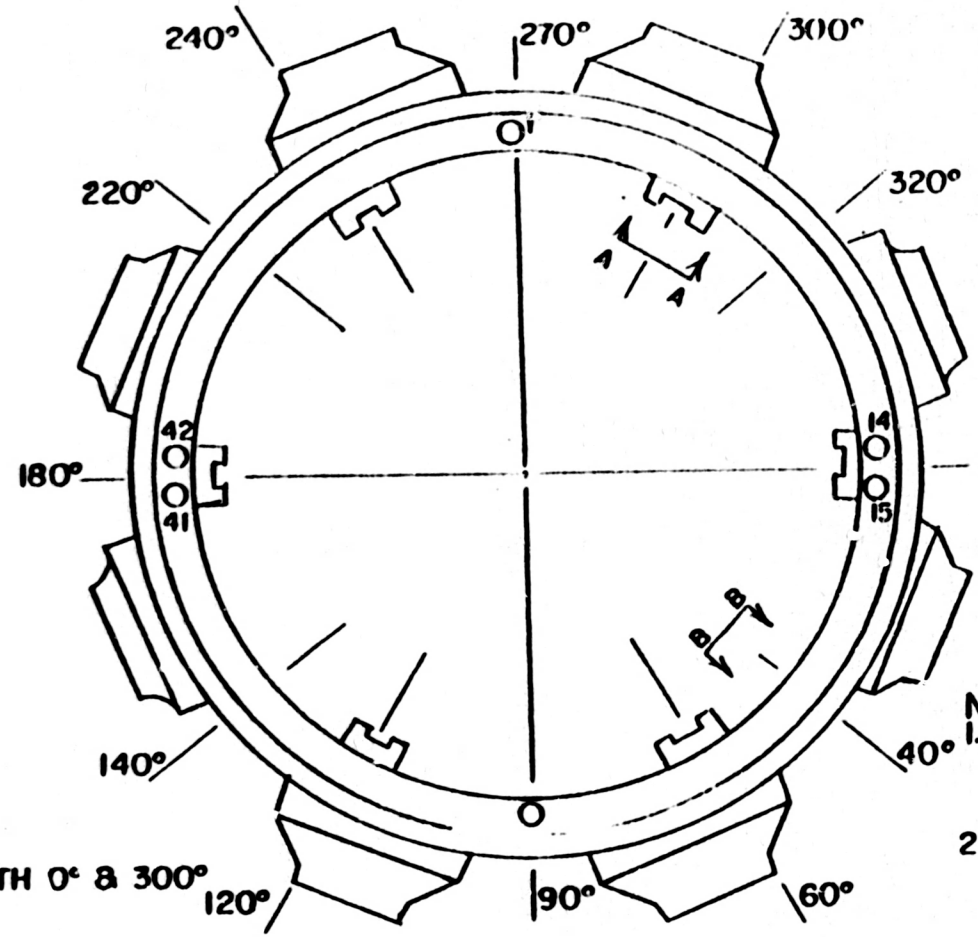

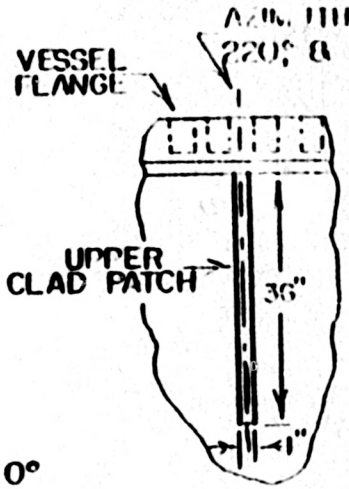

SECTION B-B

NOTES:
1. UPPER CLAD PATCH EXAMINATIONS SHALL BE DONE THROUGH THE RADIATION SPECIMEN ACCESS PORTS.
2. AZIMUTHS ARE TAKEN OFF OF REACTOR CENTERLINE.

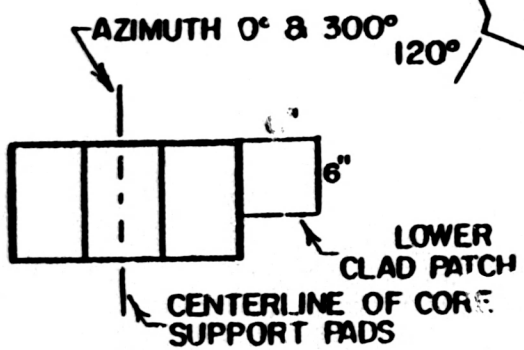

SECTION A-A

TENNESSEE VALLEY AUTHORITY
DIVISION OF NUCLEAR POWER

WATTS BAR NUCLEAR PLANT
UNITS #1 & #2
REACTOR VESSEL
(CLAD PATCHES)

SCALE NTS DRAWN TRACED MT CHECKED	SUBMITTED	APPROVED	DATE 12/2/80 SHEET 6 OF 7 SHEETS CH-11-[illegible]

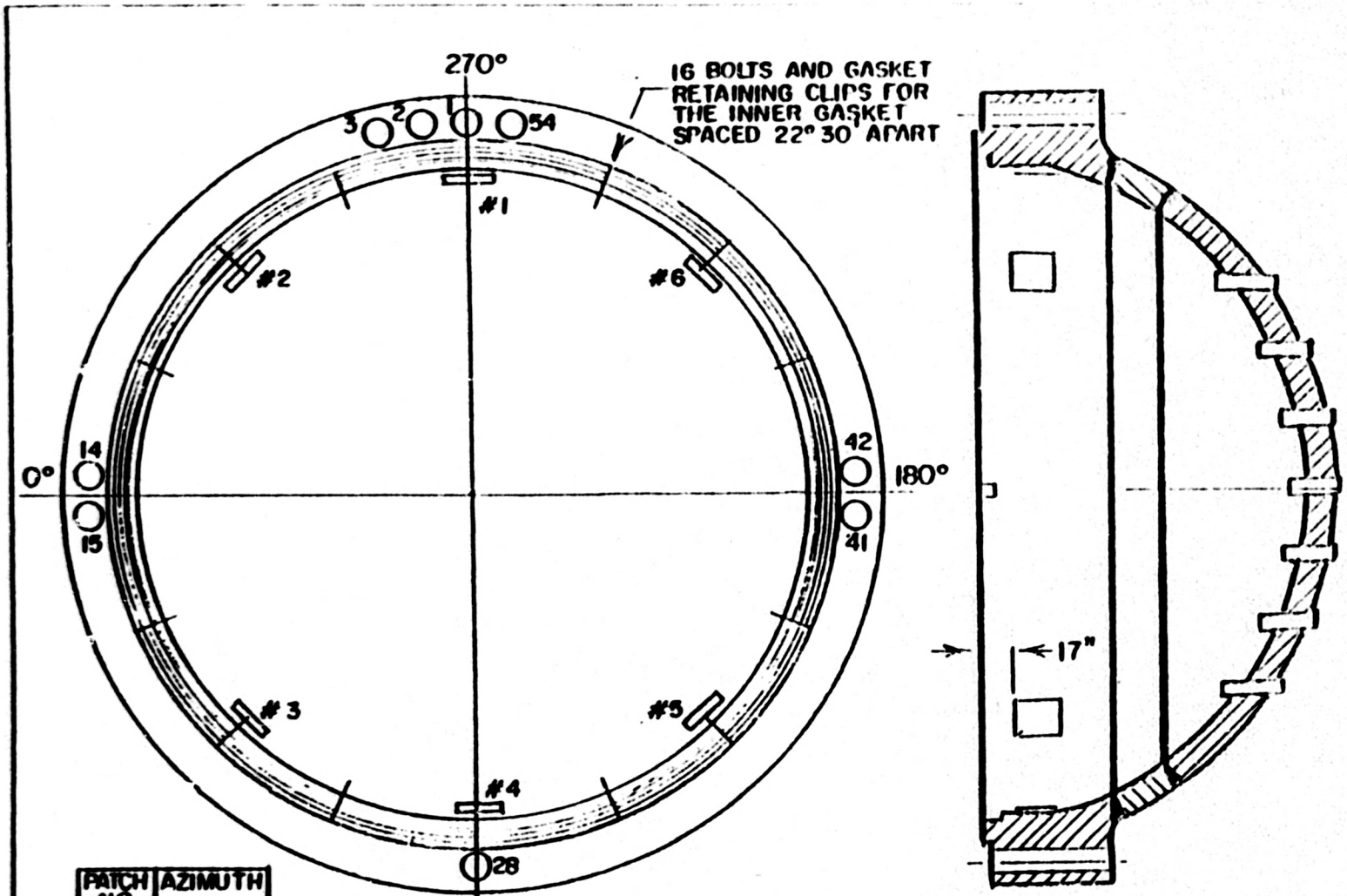

PATCH NO.	AZIMUTH
1	270°
2	315°
3	45°
4	90°
5	135°
6	225°

TENNESSEE VALLEY AUTHORITY
DIVISION OF NUCLEAR POWER

WATTS BAR NUCLEAR PLANT
UNITS #1 & #2
REACTOR VESSEL
(CLOSURE HEAD CLADDING PATCHES)

SCALE N/S | DRAWN | TRACED NV | CHECKED | SUBMITTED | APPROVED | DATE 1/5/81 | SHEET 7 OF 7 SHEET | CH-M 2594-A

WBNP
TI-504
APPENDIX A
PAGE 6 OF 30
REV. 7

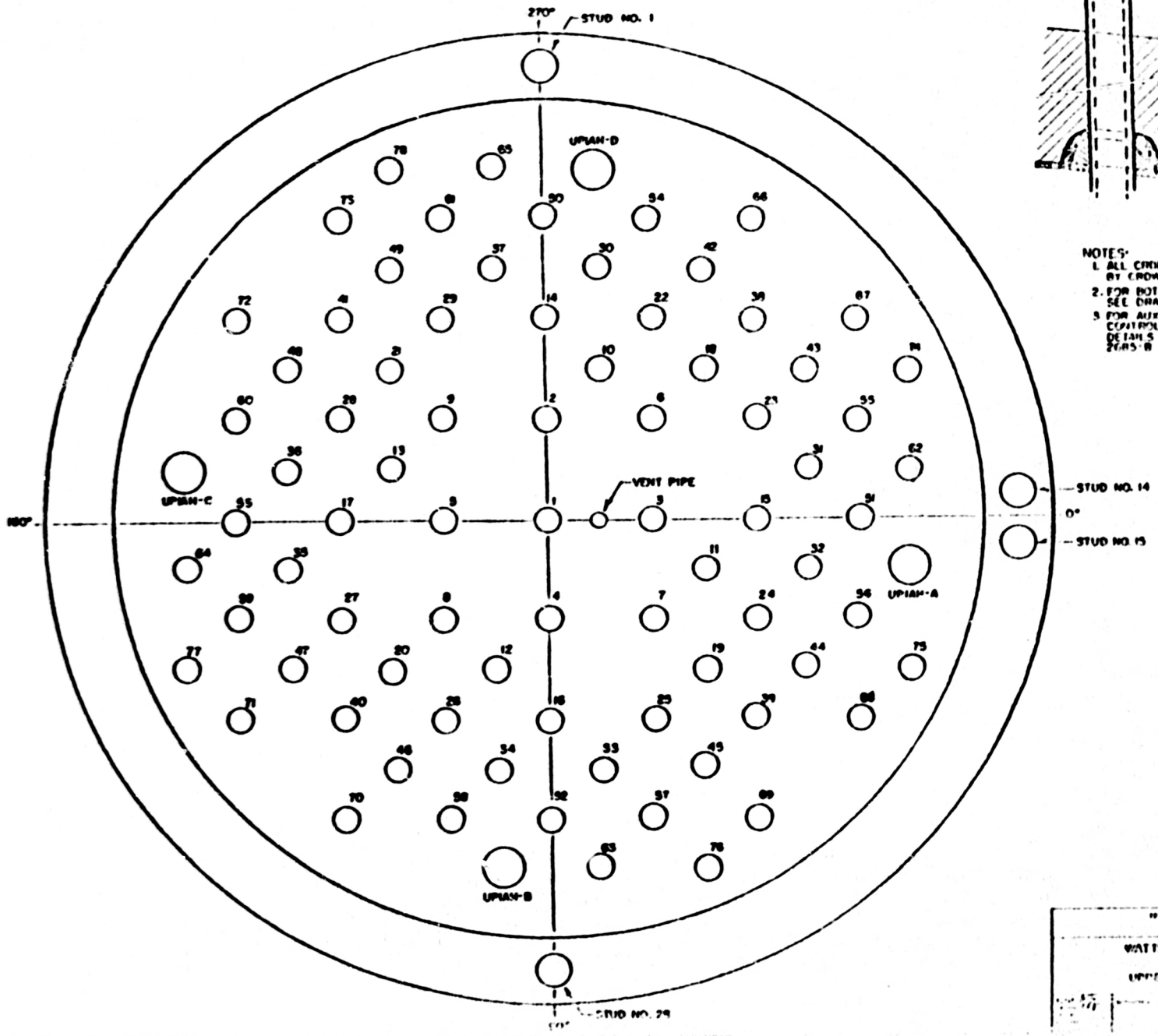

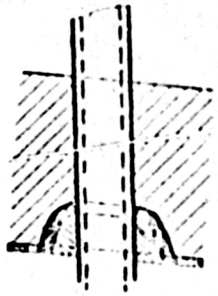

VENT PIPE PENETRATION DETAIL

NOTES:
1. ALL CROW NUMBERS ARE PREFIXED BY CROW FOR THE WELD NUMBERS
2. FOR BOTTOM HEAD PENETRATIONS SEE DRAWING NO. CH-M-[illegible]A
3. FOR AUXILIARY HEAD ADAPTER AND CONTROL ROD DRIVE PENETRATION DETAILS SEE DRAWING NOS. CH-M-[illegible]B AND [illegible]A RESPECTIVELY

WATTS BAR REACTOR
UNIT #1
UPPER HEAD PENETRATIONS

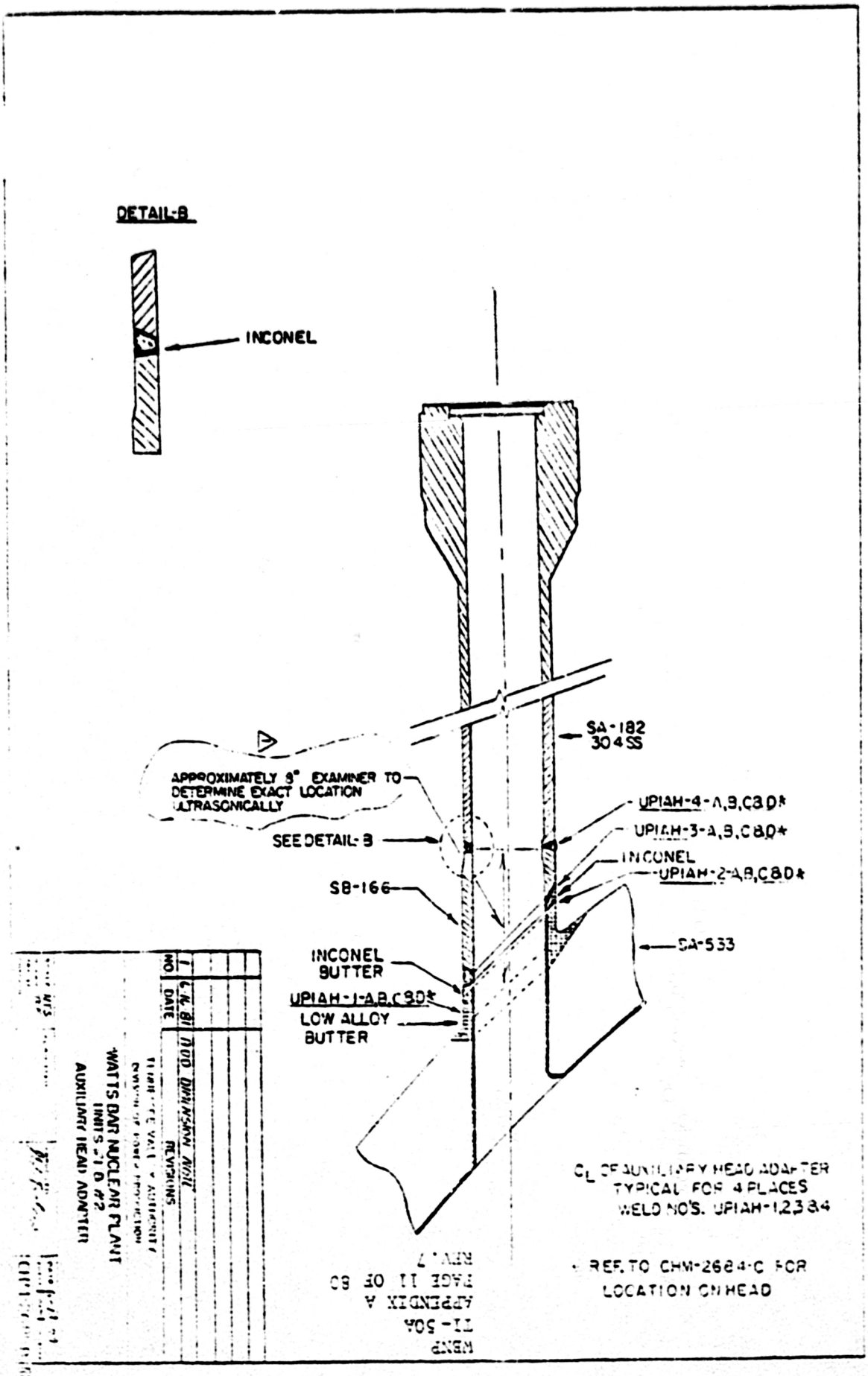
DETAIL-B
INCONEL
SA-182
304 SS
APPROXIMATELY 8" EXAMINER TO
DETERMINE EXACT LOCATION
ULTRASONICALLY
SEE DETAIL-B
UPIAH-4-A,B,C&D*
UPIAH-3-A,B,C&D*
INCONEL
UPIAH-2-A,B,C&D*
SB-166
SA-533
INCONEL
BUTTER
UPIAH-1-A,B,C&D*
LOW ALLOY
BUTTER
℄ OF AUXILIARY HEAD ADAPTER
TYPICAL FOR 4 PLACES
WELD NO'S. UPIAH-1,2,3&4
* REF. TO CHM-2684-C FOR
LOCATION ON HEAD
NO
DATE
REVISIONS
WATTS BAR NUCLEAR PLANT
UNITS 1 & 2
AUXILIARY HEAD ADAPTER

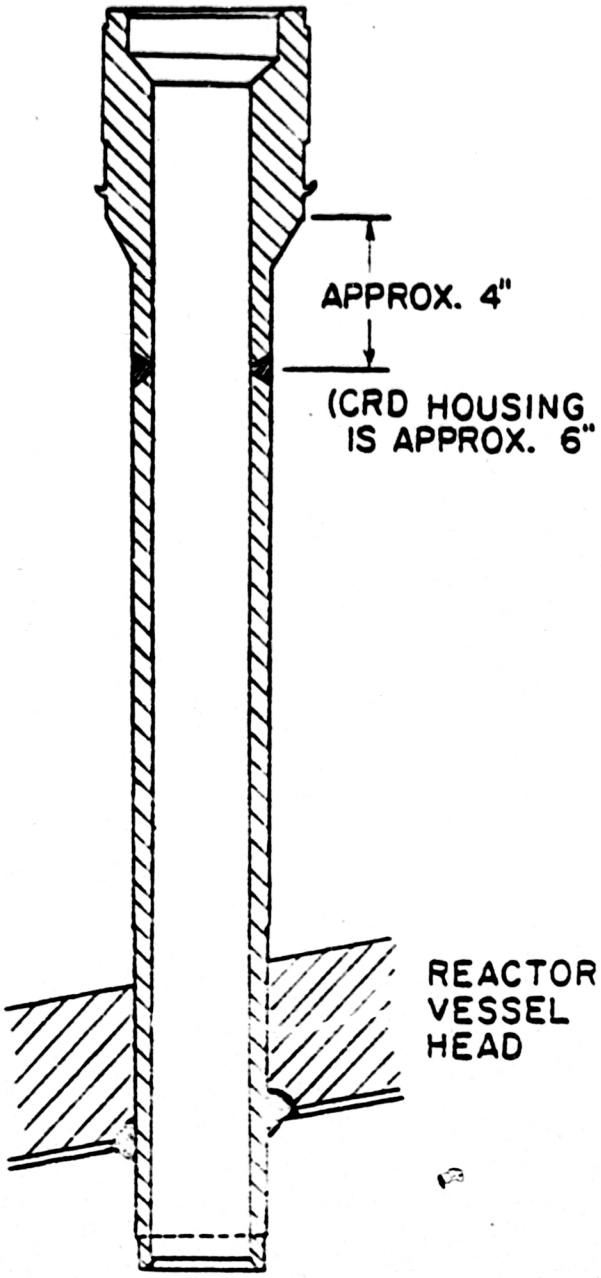

WATTS BAR NUCLEAR PLANT
UNITS #1 & #2
CONTROL ROD
DRIVE HOUSING

NTS

12-22-80

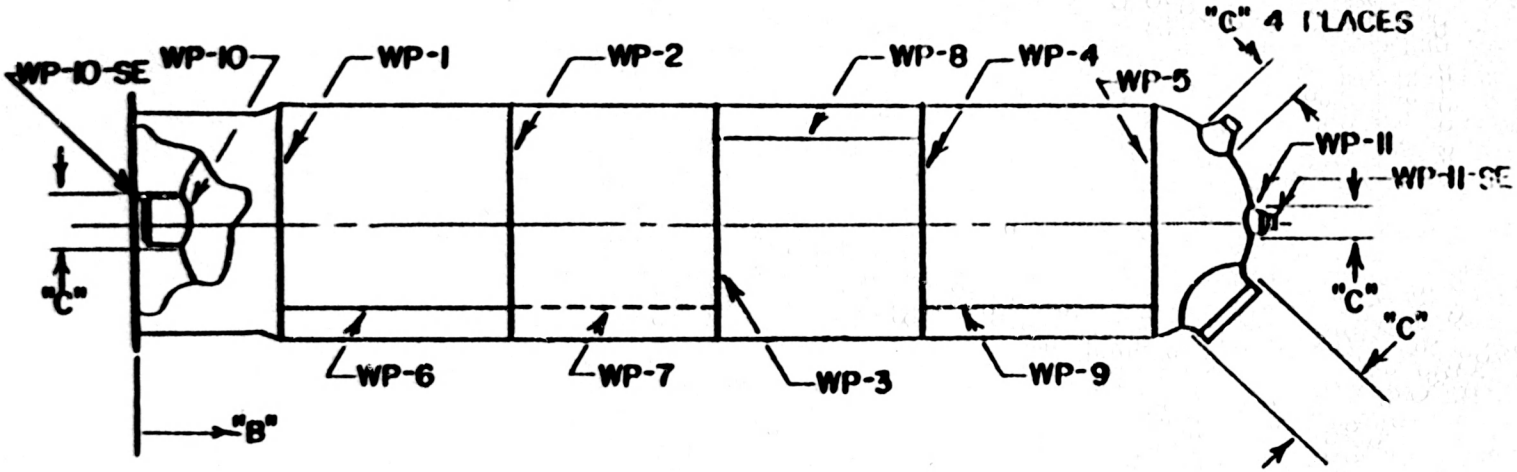

AS BUILT DIMENSIONS				
TITLE	SEAM NO.	"A"	"B"	"C"
GIRTH WELDS	1		36.14"	
	2		193.25"	
	3		322.12"	
	4		450.87"	
	5		588.12"	
LONGITUDINAL WELDS	6	+30°		
	7	-29°		
	8	+135°		
	9	+47°		
SURGE NOZ.	10	0°		24.50"
SPRAY NOZ.	11	0°		12.75"
SAFETY NOZ.	12	+81°		15.00"
SAFETY NOZ.	13	+146° 59'		15.00"
SAFETY NOZ.	14	-147° 7'		15.00"
RELIEF NOZ.	15	-82°		15.00"
MANWAY	16	-1°		32.50"

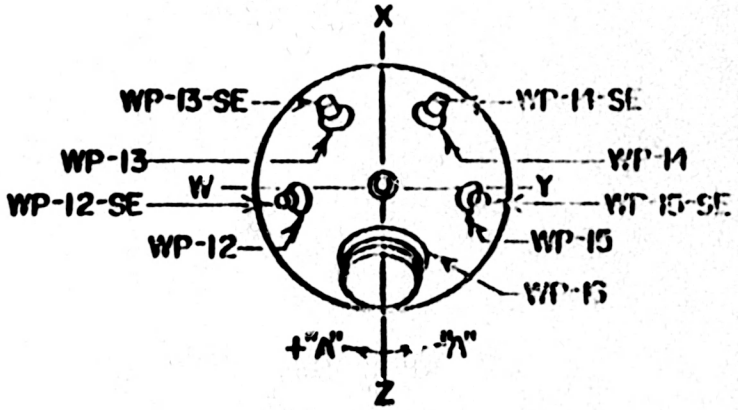

TENNESSEE VALLEY AUTHORITY
DIVISION OF NUCLEAR POWER

WATTS BAR NUCLEAR PLANT
UNIT 1
PRESSURIZER

SCALE: NTS
DRAWN
TRACED KEY
CHECKED
SUPERVISED
APPROVED
DATE
CH

PARTIAL BOTTOM VIEW

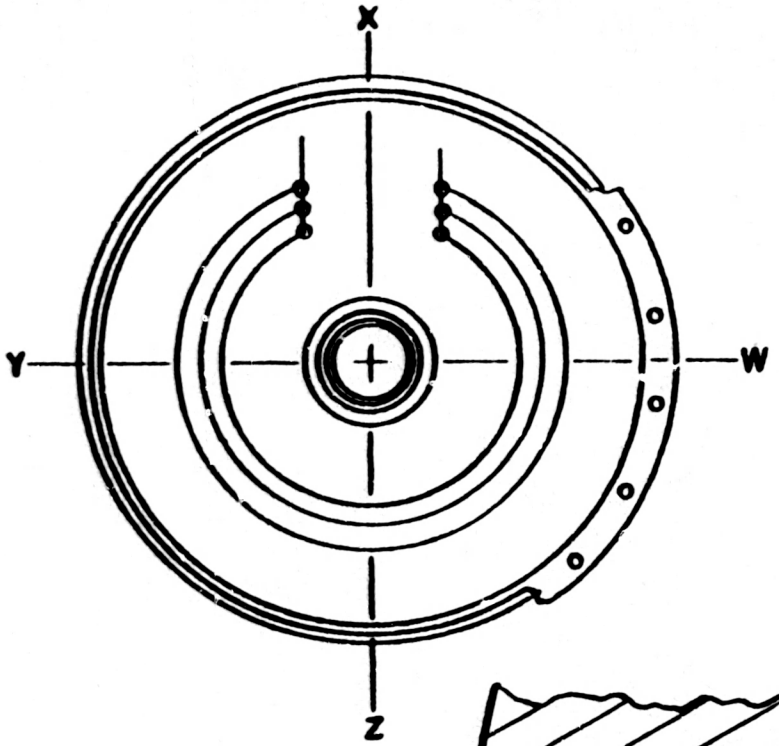

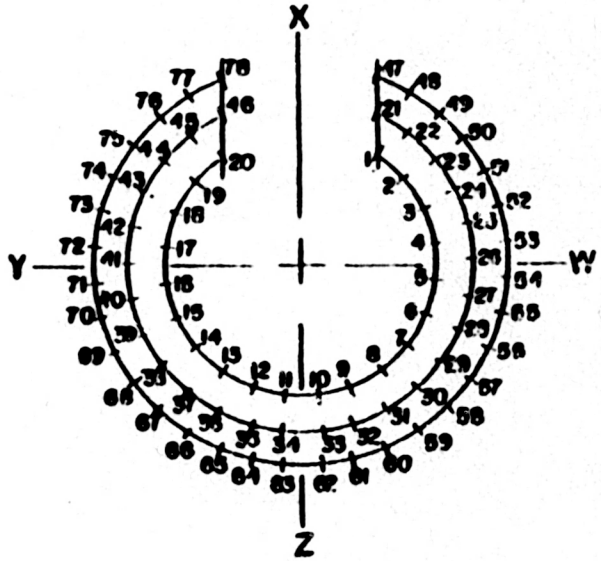

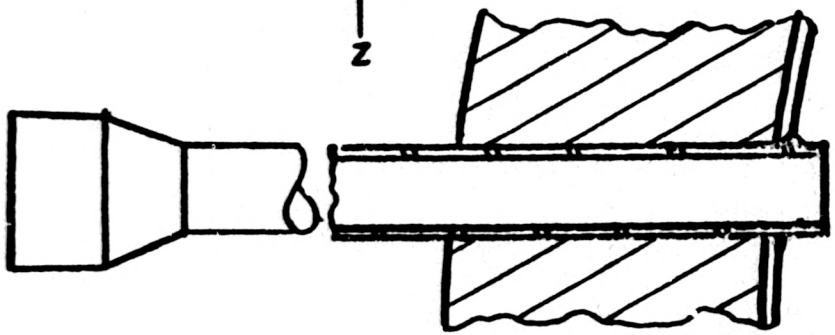

HEATER PENETRATION DETAIL

TENNESSEE VALLEY AUTHORITY
DIVISION OF NUCLEAR POWER

WATTS BAR NUCLEAR PLANT
UNIT #1
PRESSURIZER
(HEATER PENETRATIONS)

SCALE: NTS DRAWN TRACED KTP CHECKED	SUBMITTED	APPROVED	DATE RECEIVED SHEET 2 OF 4 SHEETS DRAWING NO. A

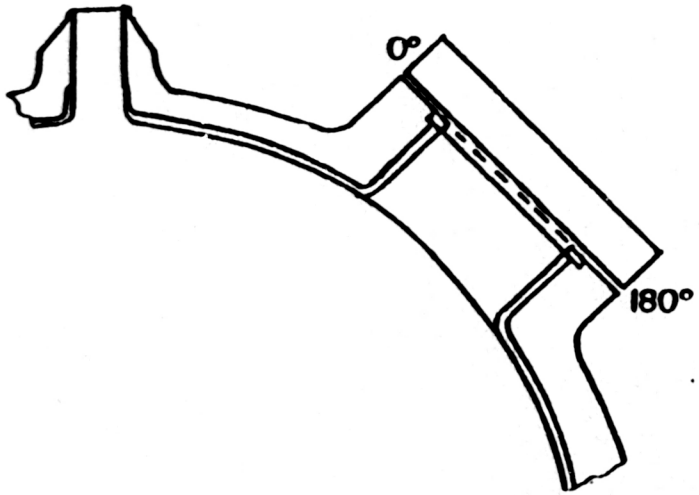

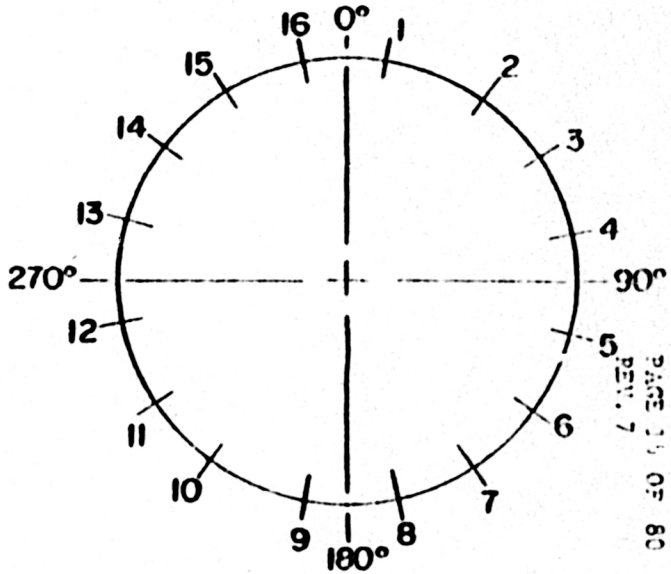

NOTE:
TO DO THE CLAD PATCH INSPECTION, PLACE THE CLAD PATCH FRAME (SEE DRAWING NO. C1-M-2525-A) ON STUDS #8 AND #9.

TENNESSEE VALLEY AUTHORITY
DIVISION OF NUCLEAR POWER

WATTS BAR NUCLEAR PLANT
UNIT #1
PRESSURIZER
(MANWAY BOLT PATTERN)

SCALE NTS	SUBMITTED	APPROVED R. T. Baker	DATE 12/9/80
DRAWN			SHEET 3 OF 4
TRACED RTV			
CHECKED			

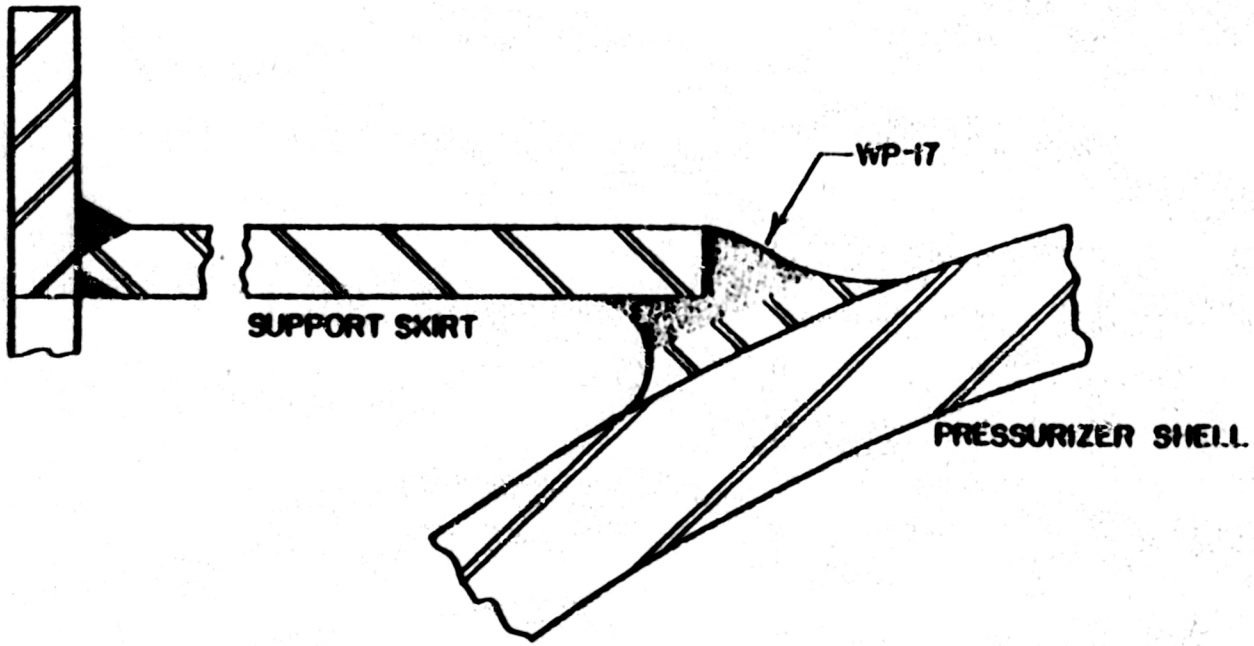

TENNESSEE VALLEY AUTHORITY
DIVISION OF NUCLEAR POWER

WATTS BAR NUCLEAR PLANT
UNIT #1
PRESSURIZER
(SUPPORT SKIRT WELD)

SCALE NTS | SUPERVISOR | APPROVED | DATE 12/10/7[illegible]

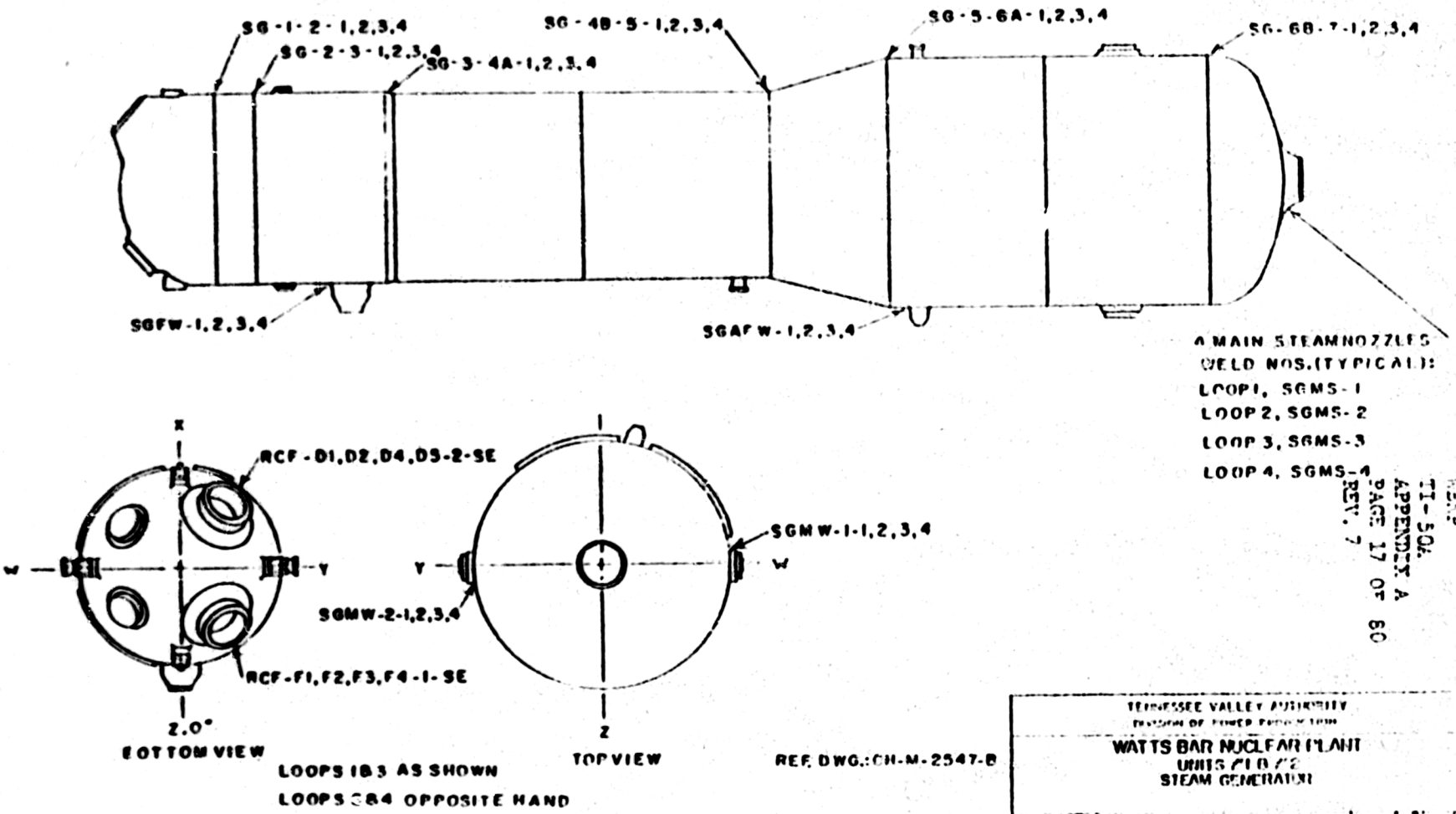
SG-1-2-1,2,3,4
SG-2-3-1,2,3,4
SG-3-4A-1,2,3,4
SG-4B-5-1,2,3,4
SG-5-6A-1,2,3,4
SG-6B-7-1,2,3,4
SGFW-1,2,3,4
SGAFW-1,2,3,4
A MAIN STEAM NOZZLES
WELD NOS.(TYPICAL):
LOOP1, SGMS-1
LOOP2, SGMS-2
LOOP3, SGMS-3
LOOP4, SGMS-4
RCF-D1,D2,D4,D5-2-SE
RCF-F1,F2,F3,F4-1-SE
SGMW-1-1,2,3,4
SGMW-2-1,2,3,4
X
Y
W
Z
2.0°
BOTTOM VIEW
TOP VIEW
LOOPS 1&3 AS SHOWN
LOOPS 2&4 OPPOSITE HAND
REF. DWG.:CH-M-2547-B
TENNESSEE VALLEY AUTHORITY
DIVISION OF POWER PRODUCTION
WATTS BAR NUCLEAR PLANT
UNITS 1 & 2
STEAM GENERATOR

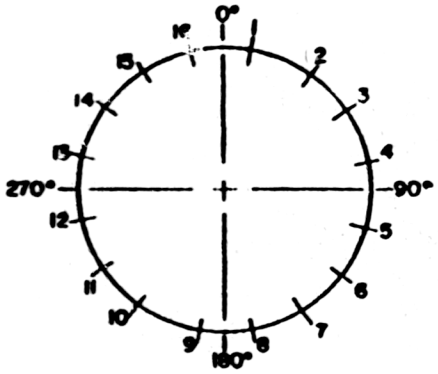

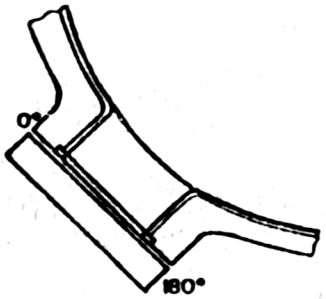

NOTE:
TO DO THE CLAD PATCH INSPECTION, PLACE CLAD PATCH FRAME (SEE DRAWING NO. CH-M-2525-A) ON STUDS #8 AND #9.

TENNESSEE VALLEY AUTHORITY
DIVISION OF INVESTIGATION

WATTS BAR NUCLEAR PLANT
UNITS #1 & #2
STEAM GENERATOR
(PRIMARY MANWAY BOLTING)

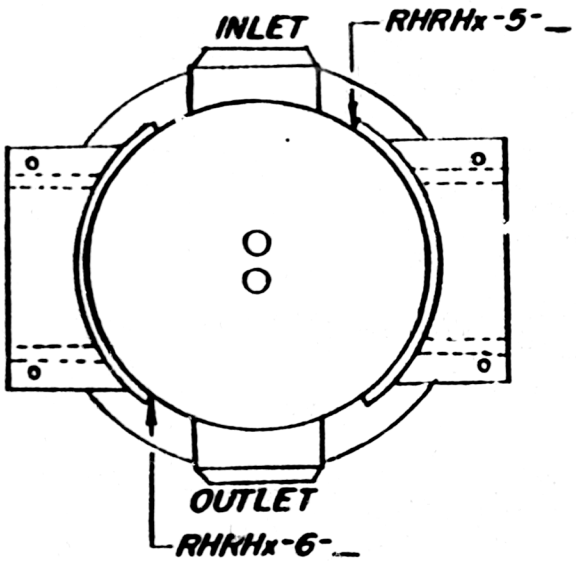

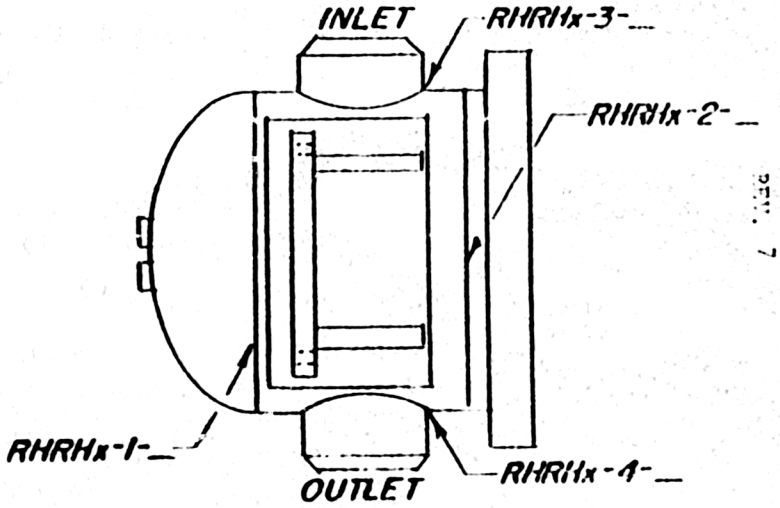

NOTE: PLACE HEAT EXCHANGER NUMBERS AT END OF WELD NUMBER

TENNESSEE VALLEY AUTHORITY
DIVISION OF POWER PRODUCTION

WATTS BAR NUCLEAR PLANT
UNITS #1 & #2
RESIDUAL HEAT REMOVAL
HEAT EXCHANGER
CHANNEL WELDS

NTS
KEY

5/3/72

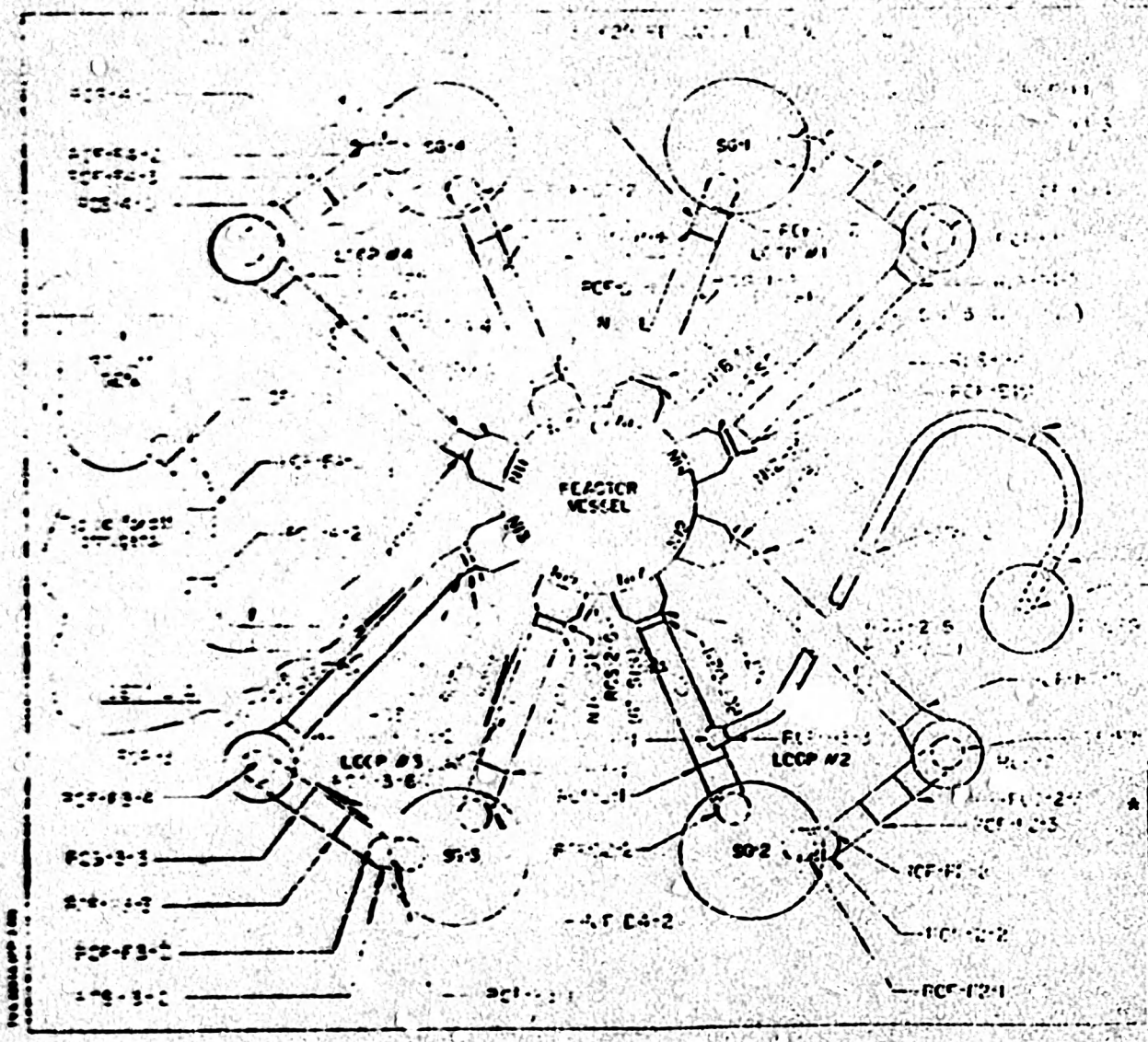

PRESSURIZER SURGE LINE
NOM PIPE SIZE - 14"
SCH160 SA-376 SMLS

HOT LEG
27" I.D. 2.72" MW
SA-351 CF-8A

CROSS-OVER LEG
31" I.D. 2.48" MW
SA-351 CF-8A

COLD LEG
27.5" I.D. 2.21" MW
SA-351 CF-8A

NO	DATE	REVISION	BY

TENNESSEE VALLEY AUTHORITY

MECHANICAL
REACTOR COOLANT PIPING
WATTS BAR NUCLEAR PLANT
UNIT 1

5/27/78
01U-247-R

WBNP
FSAR-TI-50A
Appendix A
Page 2 of 80
Revision 1

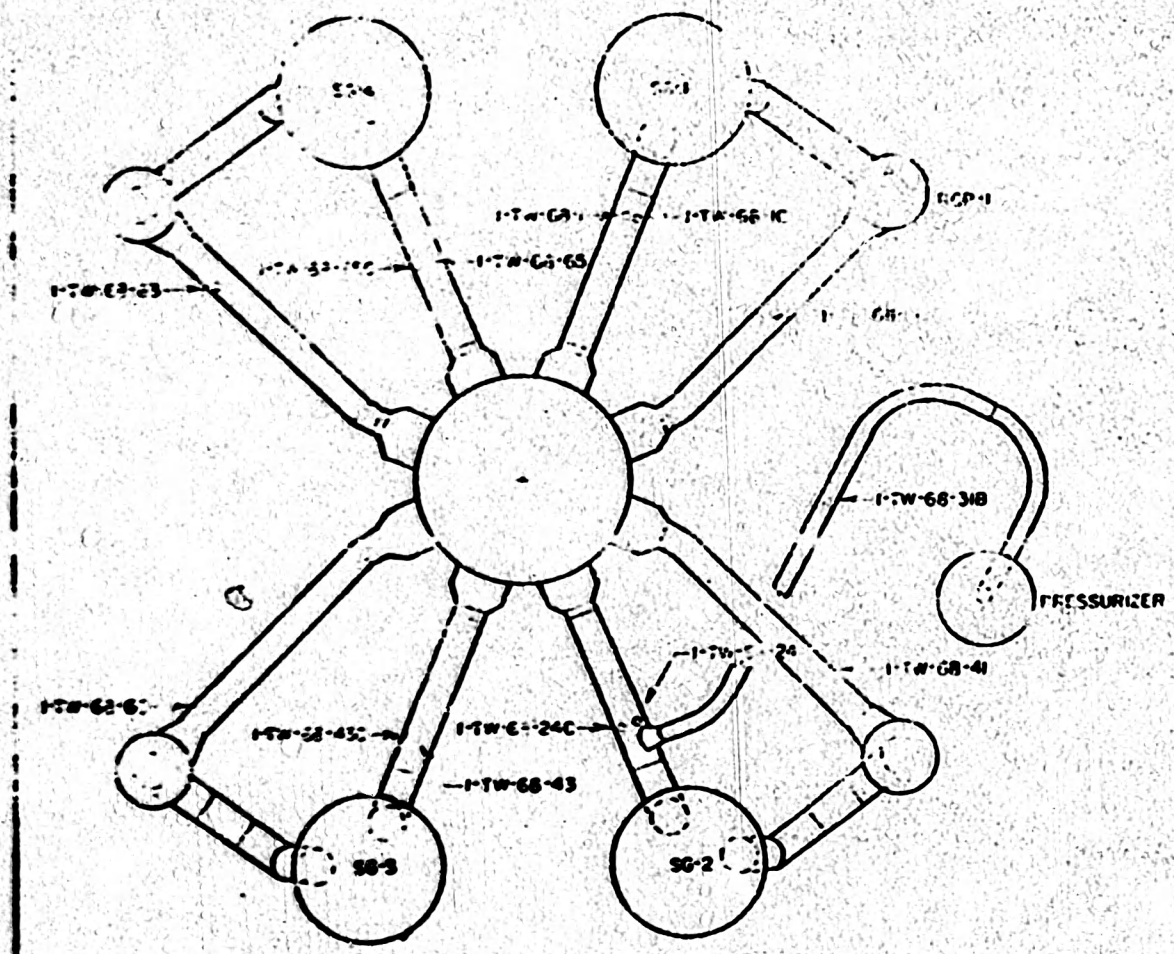

MATERIAL SPECIFICATIONS

CLASS A

TEMPERATURE WELLS

STAINLESS STEEL
SA 182 F 316

2½" I.D. ROSS

NO.	DATE	REVISIONS	APP.

TENNESSEE VALLEY AUTHORITY
DIVISION OF NUCLEAR POWER

WATTS BAR NUCLEAR PLANT
UNIT 2
REACTOR COOLANT PIPING
WELD LOCATIONS

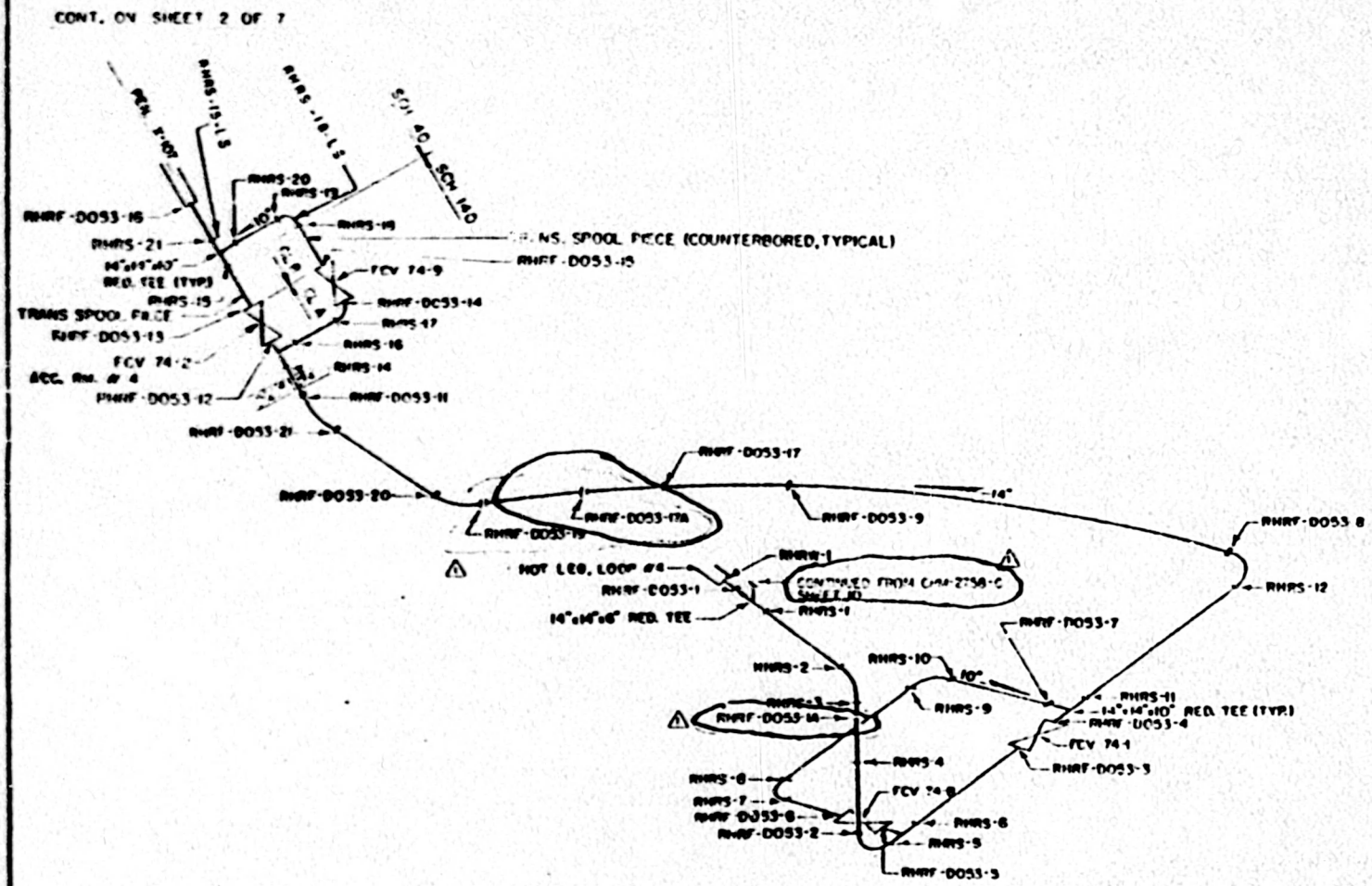

CLASS A
PIPE
14" & 10" SCH. 140, SA-376 TP 302 S
FITTINGS
14" & 10" SCH. 140, SA-403 WP 316 S

CLASS B
PIPE
14" SCH. 40, SA-358 CL. 1 TP 304 W
10" SCH. 40S, SA-312 TP 304 W
FITTINGS
14" SCH. 40, SA-403 WP 304 W
10" SCH. 40S, SA-403 WP 304 W/O
TRANSITION SPOOL PIECES
14" SCH. 140, SA-358 CL. 1 TP 304 S
10" SCH. 140, SA-312 TP 304 S

REF. DWGS.
DRAVO E-2079-IC-53 R6

SHOP WELDS #MS-1 THRU #MS-21 AND DRW-1

TENNESSEE VALLEY AUTHORITY
WBN
RESIDUAL HEAT REMOVAL
WELD MAP
SHEET 1

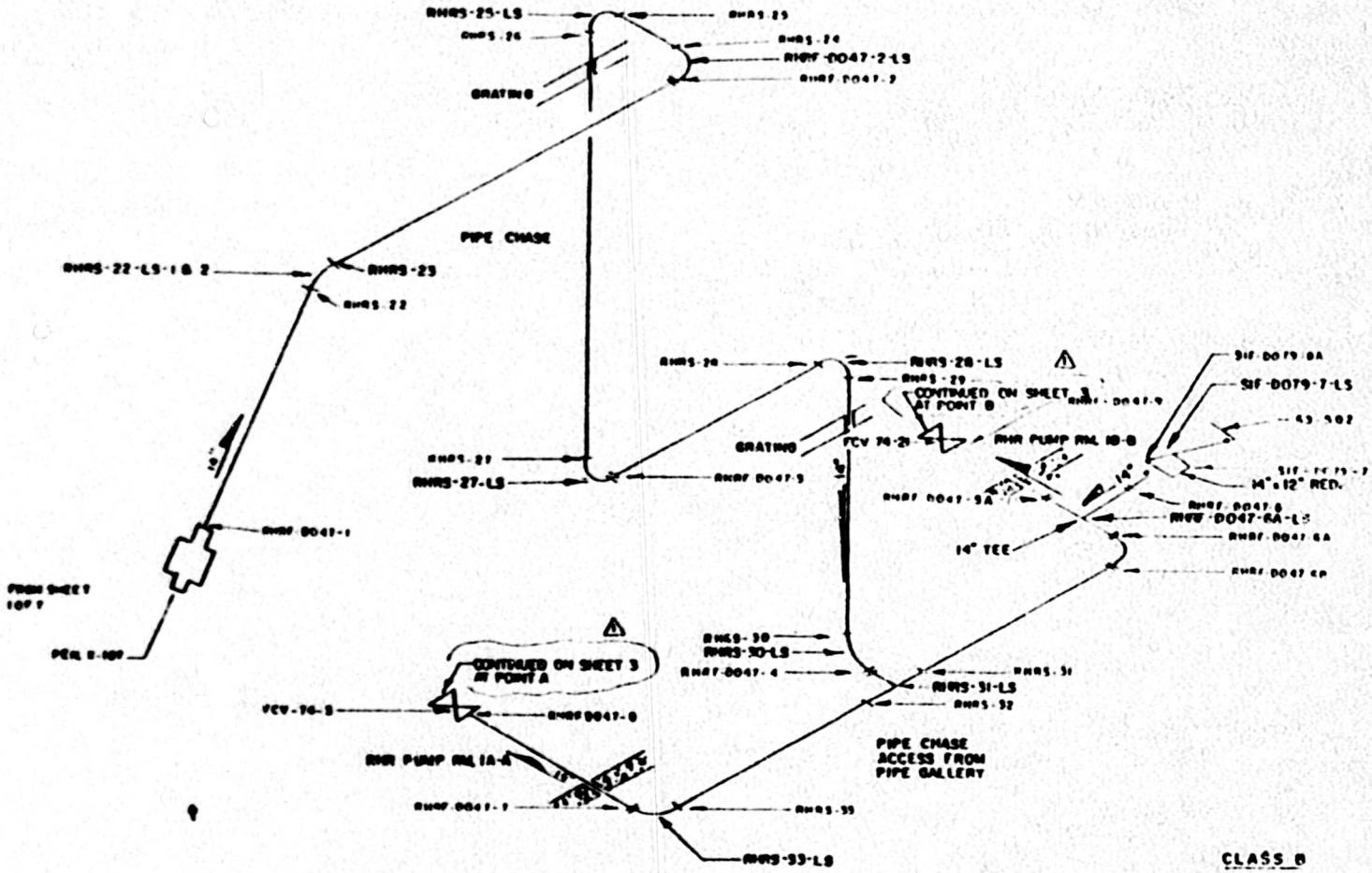

CLASS B

PIPE
14" SCH 40 SA 358 CL3TP 304 W

FITTINGS
14 & 12" SCH 40 SA-403 WP 304 W

REF. DWGS.

DRAWG E-2873-IC-47 R9

DRAWG E-2979-IC-79 R3

NO	DATE	REVISIONS	
1	4-17-86	[illegible]	[illegible]

TENNESSEE VALLEY AUTHORITY

W.B.N.P.

RESIDUAL HEAT REMOVAL

WELD MAP - UNIT 1

WBNP
II-50A
Page 23 of 80
Revision 7

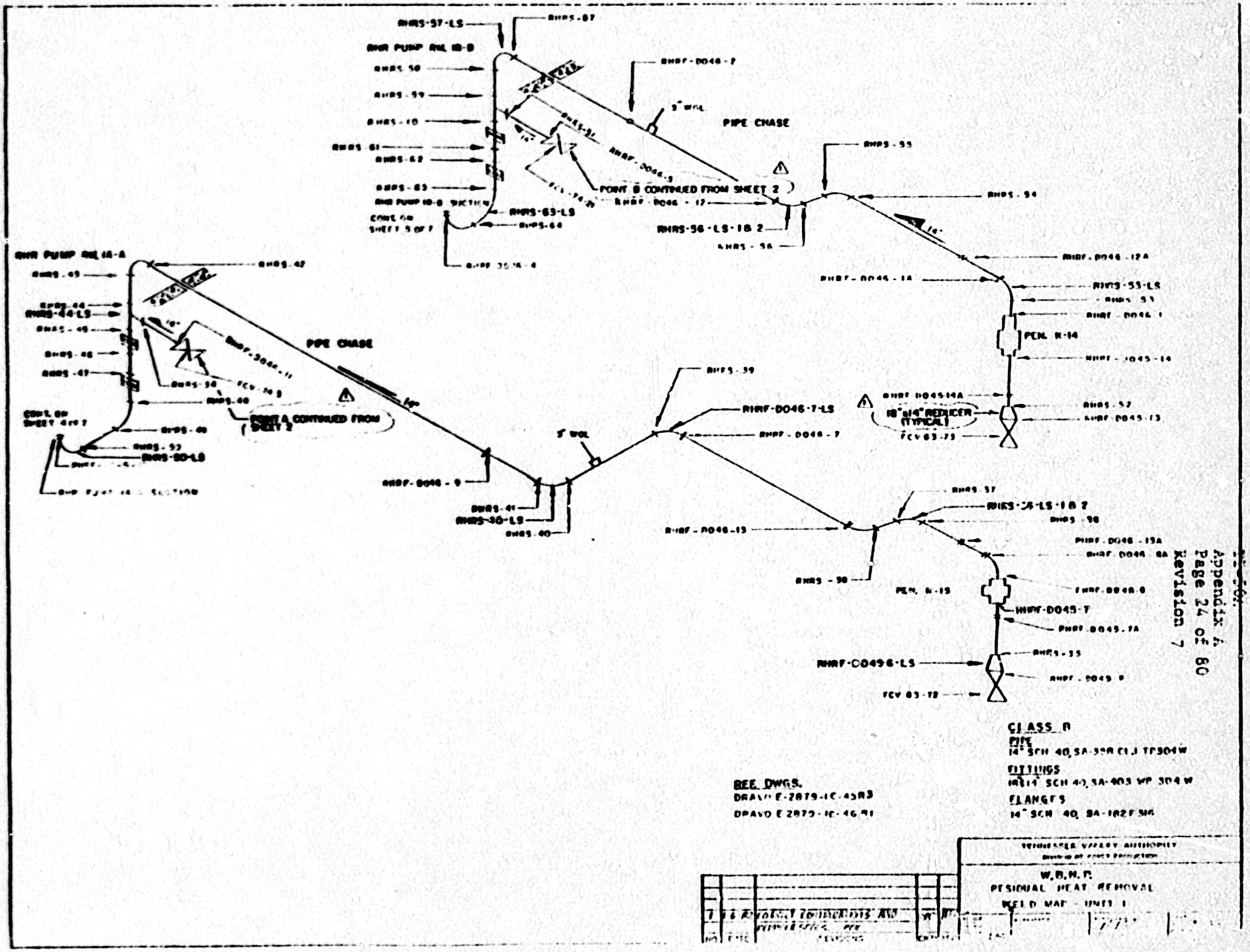
RHR PUMP NO. 1B-B
RHR PUMP NO. 1A-A
PIPE CHASE
PIPE CHASE
POINT B CONTINUED FROM SHEET 2
POINT A CONTINUED FROM SHEET 2
18"x14" REDUCER (TYPICAL)
PCV 63-73
PCV 63-72
RHRF-D046-7-LS
RHRS-56-LS-1B 2
RHRS-65-LS
RHRS-44-LS
RHRS-50-LS
RHRS-53-LS
RHRF-D046-13
RHRF-D046-9
RHRF-D046-12A
RHRF-D045-14
RHRF-D045-7
RHRF-C0496-LS
5" WGL
CLASS B
PIPE
14" SCH 40, SA-358 CL.1 TP304W
FITTINGS
18x14 SCH 40, SA-403 WP 304 W
FLANGES
14" SCH 40, SA-182 F 304
REF. DWGS.
DRAWG E-2879-IC-45R3
DRAWG E-2879-IC-46R1
TENNESSEE VALLEY AUTHORITY
W.B.N.P.
RESIDUAL HEAT REMOVAL
FIELD MAP - UNIT 1

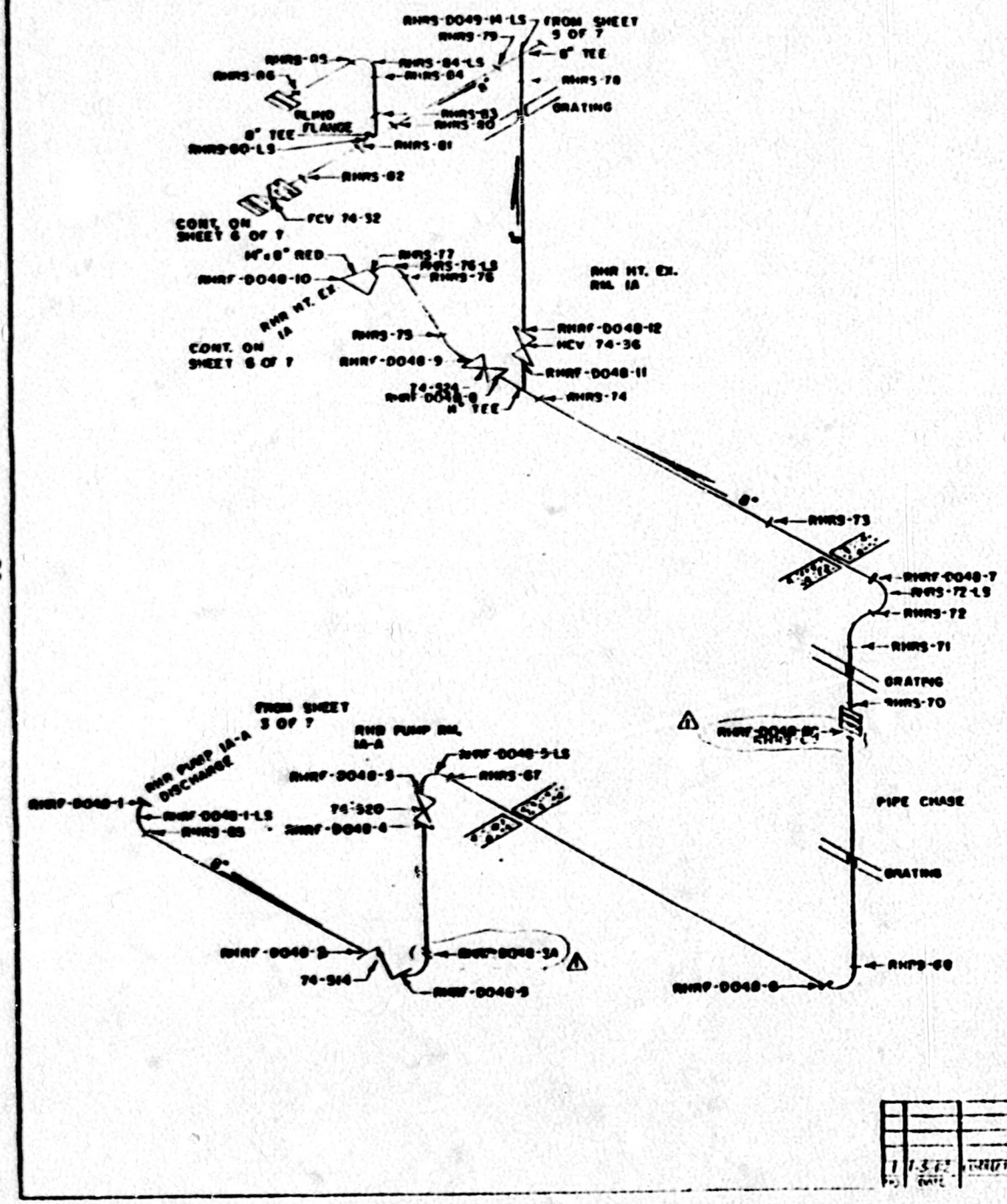

CLASS B

PIPE
8" SCH. 40S, SA-312 TP 304 W.

FITTINGS
8" SCH. 40S, SA-403 WP 304 WYE
14" SCH. 40 & 8" SCH. 40S RED.,
SA-403 WP 304 WYE

FLANGES
8" SCH. 40S, SA 182 F304

REF DWGS
DRAWG E-2079-IC-40 R4

TENNESSEE VALLEY AUTHORITY
WATTS BAR NUCLEAR PLANT
WBNP
RESIDUAL HEAT REMOVAL
WELD MAP
UNIT 1

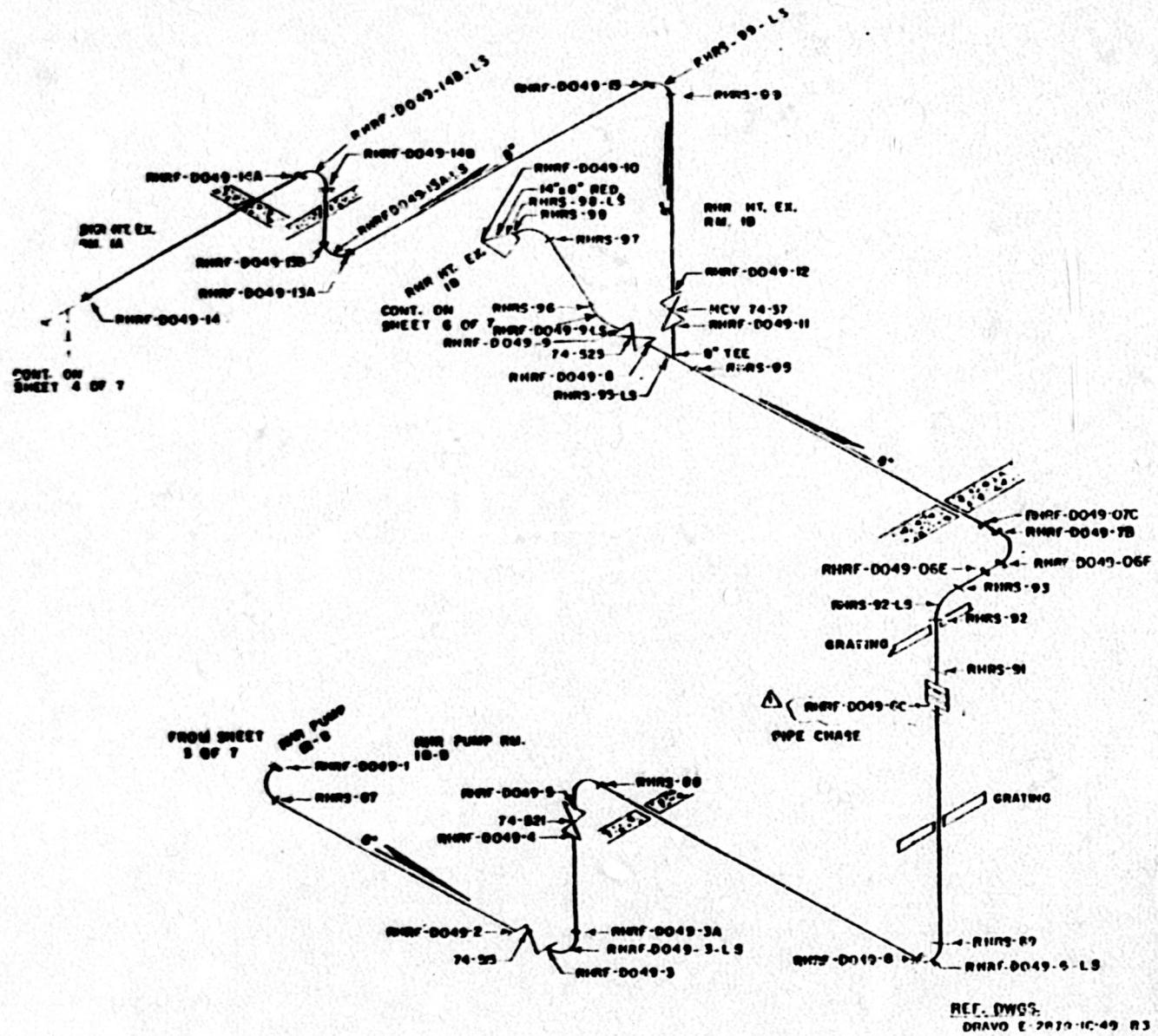

REF. DWGS.
DRAVO E-2870-IC-49 R3

CLASS R
PIPE
8" SCH. 40S, SA-312 TP 304 W/O
FITTINGS
8" SCH. 40S, SA-403 WP 304 WPO/S
14" SCH. 40 x 8" SCH. 40S RED., SA-403 WP 304 WPO/S
FLANGE
8" SCH. 40S, SA-182 F 304

NO.	DATE	REVISION
1	1-6-82	[illegible]

TENNESSEE VALLEY AUTHORITY
[illegible]
WBNP
RESIDUAL HEAT REMOVAL
WITH RHR
UNIT 1

WBNP
TI-50A
Appendix A
Page 26 of 60
Rev. 7