Table C.6

Average Concentrations of Phytoplankton

Preoperational Monitoring - Watts Bar Nuclear Plant

Station (TRM)	Year	Winter (1000's/liter)	Spring (1000's/liter)	Summer (1000's/liter)	Fall (1000's/liter)	Station Average (Years Combined) (1000's/liter)
496.5	1973	583	514	535	187	810
	1974	96	630	260	121	
	1975	356	442	1247	145	
	1976	2253	625	4511	456	
506.6	1973	1022	334	867	126	
	1974	99	473	146	130	744
	1975	242	401	806	264	
	1976	2421	131	4183	264	
518.0	1973	973	525	1787	213	
	1974	115	590	195	303	994
	1975	208	969	809	308	
	1976	1958	142	6330	472	
527.4	1973	613	833	2181	343	
	1974	169	860	475	509	1254
	1975	325	1858	687	460	
	1976	1908	260	7997	592	
528.0	1973	691	697	2915	441	
	1974	257	964	647	532	1452
	1975	302	2050	1425	359	
	1976	2634	367	8086	871	
529.9	1973	820	723	2504	445	
	1974	173	1107	349	445	1307
	1975	299	1752	822	395	
	1976	2390	362	7603	717	
532.1	1973	449	1331	3185	525	
	1974	186	1380	1117	517	2201
	1975	182	1754	4330	433	
	1976	2265	384	16268	914	
Seasonal Average		857	802	2938	410	

Table C.7

WATTS BAR NUCLEAR PLANT

CHLOROPHYLL A EXPRESSED IN mg Chl. A/m²

TRM	1973 Winter	1973 Spring	1973 Summer	1973 Fall	1974 Winter	1974 Spring	1974 Summer	1974 Fall	1975 Winter	1975 Spring	1975 Summer	1975 Fall	Station $\bar{x}$
496.5	-	4.06	3.04	6.76	1.69	14.02	5.80	7.86	9.06	4.27	-	8.57	6.51
506.6	13.69	2.30	19.01	10.05	10.16	6.00	3.28	15.60	11.13	2.62	9.19	3.33	8.86
519.0	15.63	6.39	19.92	7.02	10.95	9.93	9.60	27.02	15.04	4.26	9.22	4.89	11.76
527.4	18.85	9.58	20.97	11.57	16.08	13.65	15.39	35.24	14.38	6.19	11.15	10.46	15.29
528.0	16.46	11.10	18.01	18.72	12.68	19.36	17.63	36.79	10.90	5.25	10.22	11.34	15.70
524.9	16.52	10.18	31.45	15.59	9.89	17.90	14.27	34.05	16.05	2.80	10.37	12.89	16.00
532.1	15.91	26.87	-	17.82	12.10	32.26	37.00	37.87	12.24	7.68	26.03	23.64	22.67
Season $\bar{x}$	16.34	10.07	18.73	12.49	12.20	16.20	14.74	27.78	12.68	4.72	12.70	10.73	

From: TVA, Environmental Information, Watts Bar Nuclear Plant Units 1 and 2, November 18, 1976.

Table C.8

WATTS BAR NUCLEAR PLANT

PHYTOPLANKTON PRODUCTIVITY EXPRESSED IN mg C/day/m^2

TRM	1973 Winter	1973 Spring	1973 Summer	1973 Fall	1974 Winter	1974 Spring	1974 Summer	1974 Fall	1975 Winter	1975 Spring	1975 Summer	1975 Fall	Station $\bar{x}$
496.5	130	157	400	33	45	328	140	48	9	311	220	127	162
506.6	258	75	313	47	21	115	182	50	58	733	240	123	185
518.0	329	157	842	98	33	176	380	151	67	502	246	100	229
527.4	359	210	1488	159	36	313	575	242	73	588	290	361	391
528.0	322	214	1359	243	36	298	728	267	72	553	327	349	397
529.9	255	181	1074	241	28	229	498	261	59	253	268	391	311
532.1	375	558	1590	419	40	468	1356	322	71	211	1294	387	591
Season $\bar{x}$	290	222	1009	177	34	275	551	192	58	448	412	263	
Langleys/Day on Incubation Date	336	345	499	232	226	98	185	271	62	421	295	254	
Secchi Disc Visibility	1.10M	1.50M	1.50M	1.25M	0.80M	125M	2.40M	1.15M	0.55M	1.80M	1.75M	1.15M	
Water Temp. @ 1 Meter (°F)	44.3	67.7	77.7	58.2	46.8	66.3	78.1	59.6	47.3	65.0	81.2	63.8	

From: TVA, Environmental Information, Watts Bar Nuclear Plant, Units 1 and 2, November 18, 1976.

Table C.9

Zooplankton Taxa Identified in Tennessee River Collections Near Watts Bar Nuclear Plant
Preoperational Monitoring 1973-1975

ROTATORIA

Asplanchna spp.
Brachionus angularis
B. bidentata
B. budapestinensis
B. calyciflorus
B. havanaensis
B. quadridentatus
B. urceolaris
Cephalodella sp.
Collotheca sp.
C. pelagica
Conochiloides sp.
Conochilus hippocrepis
C. unicornis
Epiphanes macroura
Euchlanis sp.
Filinia spp.
Gastropus sp.
Hexarthra spp.
H. mira
Kellicottia bostoniensis
K. longispina
Keratella americana
Keratella cochlearis
K. crassa
K. earlinae
K. quadrata
K. valga
Lecane spp.
L. luna
L. stokesii
Monostyla spp.
M. quadridentata
Notholca sp.
N. limnetica
Platyias patulus
Ploesoma hudsoni
P. truncatum
Polyarthra spp.
Rotaria sp.
R. neptunia
Synchaeta spp.
S. stylata
Testudinella sp.
Trichocerca spp.
Trichotria pocillum

CLADOCERA

Alona sp.
A. quadrangularis
Alonella sp.
Bosmina longirostris
Ceriodaphnia sp.
C. lacustris
C. quadrangula
C. reticulata
Chydorus spp.
Daphnia sp.
D. ambigua
D. galeata mendotae
D. parvula
D. pulex
Daphnia pulex
Diaphanosoma leuchtenbergianum
Ilyocryptus spinifer
Latona setifera
Leptodora kindtii
Leydigia quadrangularis
Moina sp.
Moina micrura
Scapholebris kingi
Sida crystallinia
Simocephalus sp.
S. serrulatus
S. vetulus

COPEPODA

Calanoida (copepodid)
Cyclopoida (copepodid)
Harpacticoida (copepodid)
Nauplii
Argulus stizostethi
Canthocamptus robertcokeri
C. staphylinoides
Cyclops bicuspidatus thomasi
C. varicans rubellus
C. vernalis
Diaptomus mississippiensis
D. pallidus
D. reighardi
D. sanguineus
Ergasilus spp.
Eucyclops agilis
E. prionophorus
Mesocyclops edax
Nitocra lacustris
Paracyclops fimbriatus poppei
Tropocyclops prasinus

Of the 46 taxa of Rotatoria identified, average diversity remained relatively constant by season and by station (See Table C.10). The greatest diversity (19 different taxa) was recorded at TRM 527.4 during summer 1973. Polyarthra spp. were found at all stations, seasons, and years. Dominating the rotifer concentrations were Conochilus unicornis, Brachionus angularis, several species of Keratella, Asplancha sp., and Synchaeta stylata. Increasing production moving upstream follows the same trend observed in phytoplankton data. Highest concentrations were found during the summer (~48,800 per m^3) and lowest during winter (11,600 per m^3). At the dam forebay station (TRM 532.1) during summer 1973, approximately 265,100 rotifers per cubic meter represented peak production with Brachionus angularis, Asplanchna sp., and Ploesoma truncatum dominating the collection.

Of the 27 taxa of Cladocerans identified in the zooplankton collections, average diversity ranged between 3.4 taxa in winter to 8.6 taxa in summer (See Table C.11). Average concentrations for these seasons were between 600 to 18,000 per cubic meter. The greatest average concentration was observed during spring (~53,600/m^3). The highest average production by station (30,300/m^3) was found at TRM 528.0 followed closely by the forebay station (27,700/m^3). The cladoceran group was dominated by the single species, Bosmina longirostris, which comprised 97% of the 147,000 per cubic meter peak concentration observed at TRM 528.0 during spring 1975. B. longirostris dominated the winter, spring and fall collections. Diaphanosoma leuchtenbergianum and several Daphnia species dominated the summer collections of Cladocerans.

Immature forms dominated the Copepoda, i.e. calanoid and cyclopoid copepodids and nauplii. Increasing concentrations were observed moving upstream. Highest production was during the summer, similar levels during spring and fall and lowest during winter (See Table C.12). The greatest concentration (29,600/m^3) was found at TRM 529.9 during fall 1977, with ~90% contributed by nauplii and cyclopoid copepodids.

A summary of the zooplankton diversity and concentrations is provided by Table C.13. To be noted is the general decline in zooplankton production during all seasons of 1974 and the general rebound of the 1975 production toward the 1973 levels. The trend of increasing production moving upstream can again be observed in the average for total zooplankton concentrations.

Secondary Production - Benthos

Included in the preoperational monitoring program was the placing of artificial substrates for analyzing colonization by macrobenthos. No information on this aspect of the benthic community was presented in the FES-CP. In 1973 and 1974, the substrates were incubated for 90-day periods. Starting in 1975 and continuing to the present, 30-day incubation periods have been used. Due to the different methodology, direct comparisons cannot be made for the 1973-1975 period.

The 90-day incubation sets were dominated by Chironomidae, Psychomyiidae, and Cheumatopsyche sp. In the 30-day sets, Chironomous sp., Stenonema sp. and Cyrenellus sp. dominated. Diversity and numbers of organisms per substrate were low in all samples, as expected for this stretch of the river.

The natural bedrock substrate with gravel, rock, clay and other sediment interspersed provides favorable habitat for mussel fauna. In the FES-CP, TVA identified the 3-mile reach from the Watts Bar dam (TRM 529.9) downstream to TRM 526.9 as being a designated mussel sanctuary by the State of Tennessee. Harvesting within the sanctuary reach is illegal.

At the time of TVA's FES-CP oreparation, eight species of mussels were suspected in the sanctuary reach. Based on the results of surveys in July and August 1975 and May and August 1976, TVA has identified 13 species in the area (see Table C.14) including Lampsilis orbiculata, a species declared endangered by the U.S. Fish and Wildlife Service.[5] The survey results indicate that the most suitable mussel habitat is on the left bank (looking downstream) in the reaches from TRM 520.5 to 521.3 and TRM 527.6 to 528.5. Number per unit effort (by SCUBA divers) indicated greater density in the 520.5 to 521.3 reach, but also a good localized population density in the TRM 527.7 area. No mussel concentrations were located on the right side of the river in the general vicinity of the diffuser location. Most frequently taken were Pleurobema cordatum, Elliptio crassidens, Quadrula pustulosa and Cyclonaias tuberculata. This same order of abundance was found by Isom in his 1964 study.[6] In that study, Isom reported finding Lampsilis orbiculata from the Kentucky Dam tailwater to the Watts Bar Dam tailwater. The species' known distribution, according to the Federal Register Notice, includes the Green River (Kentucky), the Kanawha River (West Virginia), the Muskingum River (Ohio), and the Tennessee River (Alabama and Tennessee). L. orbiculata has recently been collected by TVA in the Cumberland River, also. Information for recent years, 1973-1975, indicate that a few mussels were harvested in

Table C.10

Summary of Rotatoria Data
Preoperational Monitoring - Watts Bar Nuclear Plant

Station (TRM)	Year	Winter		Spring		Summer		Fall		Station Average (Seasons & Years Combined)	
		No. of Taxa	1000's per Cubic Meter	No. of Taxa	1000's per Cubic Meter	No. of Taxa	1000's per Cubic Meter	No. of Taxa	1000's per Cubic Meter	No. of Taxa	1000's per Cubic Meter
496.5	1973	*	*	17	21.5	15	6.5	14	0.6		
	1974	14	3.6	22	29.5	14	2.4	14	4.7	15.8	10.6
	1975	16	16.3	**	**	**	**	**	**		
506.6	1973	11	23.0	15	5.5	18	13.3	13	0.6		
	1974	14	3.2	9	3.1	5	0.3	15	3.6	13.2	6.9
	1975	15	11.0	16	9.3	14	6.9	13	2.8		
518.9	1973	12	25.2	12	25.9	16	57.8	12	1.1		
	1974	13	2.1	7	3.9	9	0.5	14	9.3	12.5	13.4
	1975	12	8.8	17	13.1	14	6.7	12	5.9		
527.4	1973	12	31.7	11	53.5	19	69.0	12	1.8		
	1974	12	3.9	11	13.3	5	1.6	13	19.0	12.8	23.8
	1975	11	13.1	15	14.4	17	31.7	16	32.8		
528.0	1973	12	22.4	14	105.3	17	119.3	14	3.8		
	1974	14	2.8	10	23.1	9	2.0	13	22.1	12.7	31.8
	1975	10	5.6	12	13.9	14	20.0	13	41.7		
529.9	1973	10	11.2	13	71.2	15	244.6	12	6.2		
	1974	14	2.6	10	12.5	7	1.6	16	45.7	12.7	39.0
	1975	14	7.6	14	11.3	14	12.7	13	50.5		
532.1	1973	11	25.7	15	139.6	18	265.1	15	19.1		
	1974	19	3.7	11	46.3	13	21.0	15	56.4	14.5	64.8
	1975	14	8.8	13	20.5	16	93.7	14	77.3		
Seasonal Avgs. (Stations & Years Combined)		13	11.6	13	31.6	13	48.0	14	20.3		

* No data collected
** Data unavailable

Table C.11

Summary of Cladocera Data

Preoperational Monitoring - Watts Bar Nuclear Plant

Station (TRM)	Year	Winter		Spring		Summer		Fall		Station Average (Season & Years Combined)	
		No. of Taxa	1000's per Cubic Meter	No. of Taxa	1000's per Cubic Meter	No. of Taxa	1000's per Cubic Meter	No. of Taxa	1000's per Cubic Meter	No. of Taxa	1000's per Cubic Meter
496.5	1973	*	*	9	24.4	9	8.3	7	0.8		
	1974	4	0.3	11	13.6	5	3.5	6	2.9	6.9	6.8
	1975	4	0.5	**	**	**	**	**	**		
506.6	1973	1	0.2	9	42.1	11	15.2	7	1.0		
	1974	4	0.4	6	17.0	7	4.1	3	3.5	6.2	16.0
	1975	3	0.6	10	106.0	7	8.6	6	1.1		
518.0	1973	3	0.2	7	45.8	9	8.8	8	1.2		
	1974	5	0.2	5	3.9	7	9.7	4	3.1	6.1	11.1
	1975	3	0.6	7	52.0	8	5.6	7	2.2		
527.4	1973	2	0.5	7	41.2	10	10.4	8	3.2		
	1974	5	0.4	7	26.6	9	8.6	5	6.6	6.8	19.0
	1975	3	1.6	8	91.6	8	30.5	9	7.0		
528.0	1973	3	0.5	9	77.9	9	20.9	8	5.2		
	1974	6	0.4	7	57.6	8	14.4	6	8.3	7.1	30.3
	1975	3	1.0	8	147.0	10	21.6	8	8.8		
529.9	1973	2	0.2	7	64.1	9	40.4	8	4.7		
	1974	4	0.2	6	37.5	8	8.9	7	16.2	6.5	22.1
	1975	4	1.2	6	59.0	9	21.8	8	11.1		
532.1	1973	2	0.7	8	14.7	11	51.8	9	8.8		
	1974	4	0.3	6	57.4	9	19.3	7	23.6	7.1	27.7
	1975	4	1.0	9	92.0	8	46.8	8	15.7		
Seasonal Avg. Station & Years Combined		3.4	0.6	7.6	53.6	8.6	18.0	7.0	6.8		

* No data collected

** Data unavailable

Table C.12

Summary of Copepoda Data
Preoperational Monitoring - Watts Bar Nuclear Plant

Station (TRM)	Year	Winter		Spring		Summer		Fall		Station Average (Stations & Years Combined)	
		No. of Taxa	1000's per Cubic Meter	No. of Taxa	1000's per Cubic Meter	No. of Taxa	1000's per Cubic Meter	No. of Taxa	1000's per Cubic Meter	No. of taxa	1000's per Cubic Meter
496.5	1973	*	*	9	2.6	7	2.4	9	0.4		
	1974	8	1.2	12	1.7	8	3.6	7	2.2	8.4	2.7
	1975	7	7.4	**	**	**	**	**	**		
506.6	1973	8	2.2	8	1.5	9	2.8	7	0.3		
	1974	11	1.3	8	2.4	7	3.0	5	0.4	8.4	2.1
	1975	8	3.8	11	1.8	9	3.3	10	2.0		
518.0	1973	8	1.7	9	2.0	8	3.4	11	0.5		
	1974	9	1.0	9	0.6	9	7.6	5	0.4	8.3	2.6
	1975	7	2.6	9	3.8	7	4.5	9	3.3		
527.4	1973	7	3.8	9	3.8	9	7.3	9	1.6		
	1974	7	1.8	9	2.6	8	11.3	9	1.9	9.6	6.6
	1975	8	7.4	9	8.4	9	18.0	10	10.9		
528.0	1973	7	4.5	9	9.2	8	12.2	9	2.8		
	1974	11	1.3	10	8.4	7	15.0	10	4.5	9.0	9.6
	1975	7	4.6	8	13.8	11	12.0	11	27.3		
529.9	1973	8	1.8	9	13.6	7	28.4	9	7.4		
	1974	8	1.0	9	6.6	8	16.0	12	10.2	9.1	12.9
	1975	9	4.7	11	15.2	9	20.6	10	29.6		
532.1	1973	7	4.9	10	25.6	9	27.4	10	12.6		
	1974	10	1.2	9	17.8	8	18.5	8	18.7	9.1	17.4
	1975	9	6.0	10	25.8	8	26.0	11	25.0		
Seasonal Avg. Stations & Yrs. Combined		8.2	3.2	9.4	8.4	8.2	12.2	9.0	8.1		

* No data collected
** Data unavailable

Table C.15

Summary of Zooplankton Data
Preoperational Monitoring - Watts Bar Nuclear Plant

Station (TRM)	Year	Winter		Spring		Summer		Fall		Station Average (Seasons & Years Combined)	
		No. of Taxa	1000's per Cubic Meter	No. of Taxa	1000's per Cubic Meter	No. of Taxa	1000's per Cubic Meter	No. of Taxa	1000's per Cubic Meter	No. of Taxa	1000's per Cubic Meter
496.5	1973	*	*	35	48.6	31	17.1	30	1.9		
	1974	26	5.0	45	44.7	27	9.4	27	9.8	31.1	20.1
	1975	27	24.2	**	**	**	**	**	**		
506.6	1973	20	25.3	32	49.1	38	31.4	27	1.9		
	1974	29	4.9	23	22.5	19	7.4	23	7.8	27.8	25.6
	1975	26	15.3	37	117.1	30	18.9	29	5.8		
518.0	1973	23	27.2	28	73.7	33	70.0	31	2.8		
	1974	27	3.3	21	8.4	25	17.8	23	12.8	26.9	27.1
	1975	22	12.0	33	69.0	29	16.3	28	11.5		
527.4	1973	21	36.0	27	98.6	38	86.8	29	6.6		
	1974	24	6.1	27	42.5	22	21.5	27	27.4	28.2	49.4
	1975	22	22.2	32	114.5	34	80.2	35	50.6		
528.0	1973	22	27.5	32	192.4	34	152.5	31	11.9		
	1974	31	4.4	27	89.2	24	31.4	29	35.0	28.8	71.7
	1975	20	11.2	28	85.5	35	53.6	32	77.9		
529.9	1973	20	13.2	29	148.9	31	313.4	29	18.4		
	1974	26	3.8	25	56.5	23	26.6	35	72.2	28.3	74.8
	1975	27	13.6	31	174.7	32	55.1	31	91.3		
532.1	1973	20	31.3	33	180.0	38	344.4	34	40.5		
	1974	33	5.2	26	121.5	30	58.8	30	98.7	30.7	109.9
	1975	27	15.8	32	138.4	32	168.0	33	118.0		
Seasonal Avg. Stations & Yrs. Combined		24.6	15.4	30.2	93.8	39.8	79.0	29.8	35.2		

* No data collected
** Data unavailable

Table C.14

COMPOSITION OF MUSSEL POPULATION BELOW WATTS BAR DAM COLLECTED (ALL METHODS)

JULY AND AUGUST 1975

Name	Number from TRM 527.6 to 528.5	Number from TRM 520.5 to 521.3	Total	% of Total
Amblema plicata	6	2	8	5%
Quadrula pustulosa	9	20	29	19%
Quadrula metanevra	1	3	4	3%
Tritogonia verrucosa	2	1	3	2%
Cyclonaias tuberculata	5	15	20	13%
*Pleurobema cordatum***	12	21	33	22%
Elliptio crassidens	16	14	30	20%
Obliquaria reflexa	1	1	2	1%
Actinonaias carinata	1	0	1	<1%
Plagiola lineolata	2	7	9	6%
Proptera alata	6	3	9	6%
Ligumia recta	3	0	3	2%
*Lampsilis orbiculata**	2	0	2	1%
Total	66	87	153	100%

Note: *Dromus dromas** was found in the downstream reach (~7.6 miles downstream of plant site) during a June 1978 survey.

(TVA Comments on Watts Bar DES, July 31, 1978, Enclosure I, p. 13).

* On Department of Interior list of proposed endangered species.
** On Tennessee Heritage Program list as species of Special Concern.

From: TVA, Environmental Information, Watts Bar Nuclear Plant, November 18, 1976, p. A-18.

Chickamauga Reservoir but species and amounts are unknown. There are none harvested for human consumption.

During a more recent survey (June 1978), TVA collected two specimens of Dromus dromas between TRM 520.0 and TRM 521. This species is also listed as endangered by the Department of Interior. TVA indicates this occurrence of D. dromas to be the first reported for Chickamauga Reservoir. The known distribution at the time of listing was the Powell and Clinch Rivers in Virginia and Tennessee. Additional specimens of L. orbiculata were collected at this same location which is ~7.6 miles downstream of the Watts Bar Nuclear Plant site. TVA believes this occurrence of L. orbiculata verifies that the species is more widely distributed in Chickamauga Reservoir than previous data had indicated.

The Asiatic clam, Corbicula manilensis, has become prominent in the benthos in the vicinity of the Watts Bar site during the past decade. Densities reach hundreds per square meter. This species is of engineering concern due to their colonization on surfaces of cooling water systems.

Fish Production - Ichthyoplankton

In TVA's FES, the tailwater area was considered favorable spawning habitat for sauger, white bass, smallmouth bass, and possibly yellow perch which had recently invaded the reservoir from the Hiwassee River.[7] No specific site data on ichthyoplankton were available at preparation of the FES-CP.

Recent data for the 1976 and 1977 spawning seasons suggest that the area may not be as favorable for the tailrace spawners as previously noted. Following is a description of the methodology and study results as presented by TVA:

> "To determine the spatial and temporal concentrations and distributions of ichthyoplankton in the vicinity of Watts Bar Nuclear Plant Site, samples were taken along a transect adjacent to the intake construction site at Tennessee River Mile 528.0. Five stations equidistantly spaced, were sampled biweekly from March 29, 1976 through September 9, 1976. At each station, full-stratum samples were taken four times a day (dawn, day, dusk, night) during each sampling period. All samples were taken with a 0.5 m beam net (0.5 mm mesh) towed at 1.0 m/sec. Flow was recorded with a General Oceanics large-vane flowmeter mounted in the net mouth. All tows were of 10 min duration, and approximately 150 m^3 of water was filtered with each tow. All tows were in an upstream direction.
>
> "Samples were preserved in the field in 10 percent Formalin and returned to the Laboratory. Fish early life stages were identified to the lowest possible taxon using polarized stereomicroscopy and available taxonomic keys. Level of identification depended upon taxon in question, developmental stage and condition of specimens. Mutilated specimens were termed "unidentified" and those identifiable only to the family level were termed "unspecified".
>
> "Fish larvae of 16 taxa belonging to 8 families were collected (Table C.15). Unspecified clupeids were the most abundant taxon overall (91.17 percent relative abundance). The only other taxa which exceeded 1.0 percent relative abundance were Aplodinotus grunniens (freshwater drum) and Lepomis spp.
>
> "Few larvae were collected which were produced by migratory (tailrace) spawners. These were six Morone spp., two Minytrema melanops, and a single Stizostedion spp. The combined relative abundance of these taxa was less than one tenth of one percent of the total catch. If the Watts Bar tailrace had been an important spawning area in 1976, we would have expected their young to have occurred in considerably higher numbers.
>
> "Of the taxa collected, only clupeids were abundant enough to merit close scrutiny of their spatial distribution. During sampling period 3-11 clupeids were collected at all stations and in no instance was there more than an order-of-magnitude difference between concentrations at the five stations. Also, there was no consistent pattern of high or low concentrations at any one station; therefore, the horizontal distribution of clupeids was essentially uniform throughout the season. Uniformity of horizontal distributions of most taxa is also apparent upon examination of percent relative abundance of all taxa collected by station (Table C.16). Ictalurids were most abundant at the middle channel station (the deepest water station). All ictalurids captured were alevins ranging in size from 17-40 mm total length. Ictalurids of

TABLE C.15

Total Number Captured and Relative Abundance (%) of Fish Larvae

Taxon	No. Collected	Percent Relative Abundance
Clupeidae		
Unspecified clupeids	9913	91.17
Dorosoma cepedianum	2	0.02
Dorosoma petenense	32	0.29
Sciaenidae		
Aplodinotus (grunniens)	601	5.53
Centrarchidae		
Lepomis spp.	209	1.92
Pomoxis spp.	24	0.01
Ictaluridae		
Ictalurus furcatus	1	0.01
Ictalurus punctatus	45	0.41
Pylodictis olivaris	1	0.01
Cyprinidae		
Unspecified cyprinids	7	0.06
Pimephales group	1	0.01
Cyprinus carpio	27	0.25
Percicthyidae		
Morone sp.	1	0.01
Morone (not *suxatillis*)	5	0.05
Catostomidae		
Minytrema melanops	2	0.02
Percidae		
Stizostedion sp.	1	0.01
Unidentified	1	0.01

Reference 1, Section 2, page 3-11.

Table C.16 Percent Relative Abundance of Fish Larvae Captured at 5 Stations-Watts Bar Nuclear Site - 1976.

Taxon	Left Shoreline	Left Channel	Middle Channel	Right Channel	Right Shoreline
Unidentified Fish	0.06				
Unspecified clupeids	90.23	91.83	89.10	93.54	92.93
Dorosoma cepedianum	0.06				0.05
D. petenense	0.17	0.37	0.25	0.28	0.42
Unspecidied cyprinids	0.06	0.18	0.03	0.06	0.05
Pimephales group			0.03		
Cyprinus carpio	0.52	0.25	0.19	0.17	0.19
Minytrema melanops	0.12				
Ictalurus furcatus			0.03		
I. punctatus	0.12	0.12	0.94	0.28	0.09
Pylodictis olivaris			0.03		
Morone sp.	0.06				
Morone (not saxatilis)		0.12			0.14
Lepomis sp.	2.27	1.35	2.00	1.61	2.21
Pomoxis sp.	0.17	0.25	0.25	0.22	0.19
Stizostedion sp.			0.03		
Aplodinotus grunniens	6.16	5.53	7.13	3.84	3.72

Reference 1.

these sizes should be capable swimmers, and apparently, they actively selected the deepest water area for habitation."[8]

The potential entrainment, based on 1976-77 data, is evaluated in Section 5.4.2.

Fish Production - Reservoir Fishery

Cove rotenone data for 1970, presented in the FES-CP, indicated an average total of 203.6 kilograms of fish per hectare (181.6 pounds per acre) with highest biomass in a 3-acre cove in the area between TRM 505 to 509. Represented in the 1970 samples were 37 species of fish with yellow perch appearing for the first time in reservoir inventories. Table C.17 presents the percent species composition by number and weight.

Cove data for 1972 show an increase in the average production, i.e. 316.2 kilograms per hectare (282.1 pounds per acre). The sample nearest the Watts Bar site (TRM 508.0), again showed significantly greater populations (573.1 kilograms per hectare). Treadfin shad, Dorosoma petenense, made up a greater percentage of the total number and weight than in 1970 (See Table C.18).

Cove data for 1973 show an intermediate level of production between 1970 and 1972, i.e. 289 kilograms per hectare (258 pounds per acre). The upstream cove (TRM 508.0) was nearly 3 times as productive as the other three coves sampled. Threadfin shad contributed 50 percent of the total number for all samples. Gizzard shad (Dorosoma cepedianum) dominated the weight as in the previous years of collection (See Table C.19). A comparison of the cove results for the years 1970 through 1973 is presented in Table C.20.

A list of species identified in cove rotenone samples from Chickamauga Reservoir is provided in Table C.21. TVA has indicated that all of these fish species can be considered as important using a liberal interpretation of the definition given in NRC Reg. Guide 4.2.

Commercial harvest of fish from Chickamauga Reservoir for the 1971-1973 period has been estimated at 373,000 pounds per year. Comparison with other TVA reservoirs shows that Chickamauga Reservoir contributed approximately 5 percent of the Tennessee Valley - wide estimate (Table C.22). The most recent commercial harvest data for Chickamauga (1972) are given in Table C.23. Catfish, buffalo, and carp made up over 99 percent of the total 1972 harvest.

A survey of sport fishing in Chickamauga Reservoir for the period 1972 through 1975[9] indicates an average sport harvest of 4.2 kg per hectare per year [Table C.24(a)]. The catch by species is given in Table C.25. The annual average sport harvest for the four-year survey was 66,040 kg.

The tailwaters of the Watts Bar Dam support a significant sport fishery for sauger although data collected to date suggest limited spawning success by this species and other migratory spawners. Creel data, specific to the tailwater, are limited since previous reporting has been for the total reservoir. Data for the first six months of 1977 [Table C.24(b)] show that sauger contributed 13.6% by number and 19.8% by weight of the tailwater harvest. White crappie ranked first in the creel by both number and weight. Channel catfish harvest was on the same order as the sauger harvest. During this period, the calculated number and weight (kg) of fish harvested per hour was 0.96 and 0.20, respectively. These rates may be compared with the annual harvest rates for the entire reservoir during the period 1972-1975 [Table C.24(a)].

Table C.17 SPECIES COMPOSITION OF COVE POPULATION, CHICKAMAUGA RESERVOIR, 1970

Species	Percent of total number	Percent of total weight
Threadfin shad	29.9	3.2
Gizzard shad	27.6	29.0
Bluegill	15.3	5.7
Assorted minnows	12.2	.6
Drum	5.2	13.7
Largemouth bass	3.3	2.4
Other sunfish	1.8	1.8
Spotted bass	1.7	.3
White crappie	.9	1.4
White bass	.5	.1
Smallmouth buffalo	.4	23.7
Channel catfish	.2	1.7
Yellow perch	.2	.1
Spotted sucker	.2	.2
Bigmouth buffalo	.1	8.8
Golden redhorse	.1	1.6
Blue catfish	.1	.9
Skipjack herring	.1	.2
Carp	.1	3.2
Flathead catfish	.1	.3
Black redhorse	T	.5
Spotted gar	T	T
Longnose gar	T	T
Quillback	T	.4
Sauger	T	.1
Black crappie	T	T
Mooneye	T	T
Black buffalo	T	.1
Rock bass	T	T

T = less than 0.05 percent

Table C.18 Species Composition of Cove Populations, Chickamauga Reservoir, 1972.

Species	Percent of Total Number	Percent of Total Weight
Threadfin shad	49.7	10.3
Bluegill	20.2	6.5
Miscellaneous minnows	14.9	1.0
Gizzard shad	5.1	35.3
Drum	3.4	9.1
Longear sunfish	2.0	.7
Redear sunfish	.9	2.4
Spotted bass	.8	.3
Largemouth bass	.6	2.6
White crappie	.4	.8
Channel catfish	.3	2.8
Smallmouth buffalo	.2	13.9
Spotted sucker	.2	2.0
Yellow perch	.2	.2
Warmouth	.2	.1
Yellow bass	.2	.1
Carp	.1	8.8
Skipjack	.1	.3
Orangespotted sunfish	.1	t
Flathead catfish	t	.2
Golden redhorse	t	1.2
Green sunfish	t	t
Black crappie	t	t
Hogsucker	t	.1
River redhorse	t	.1
Longnose gar	t	.3
White bass	t	t
Sauger	t	.1
Black redhorse	t	.2
Black bullhead	t	t
River carpsucker	t	.1
Blue catfish	t	.3
Total	99.6	99.8

t = Less than .05

Table C.19 Species composition of Cove Population, Chickamauga Reservoir, 1973.

Species	Percent of Total Number	Percent of Total Weight
Threadfin shad	40.8	7.7
Bluegill	24.7	5.9
Gizzard shad	6.4	31.1
Drum	4.8	10.7
Redear sunfish	4.8	2.4
Bullhead minnow	3.9	.2
Longear sunfish	3.6	.7
Brook silversides	1.6	.1
Emerald shiner	1.4	.1
Blackstriped topminnow	1.3	.1
Largemouth bass	1.1	2.4
Spotted sucker	1.1	2.4
Warmouth	1.0	.3
Spotted bass	.6	.2
Logperch	.6	.3
White crappie	.4	.8
Channel catfish	.4	3.3
Yellow perch	.3	.3
Smallmouth buffalo	.2	14.5
Carp	.2	14.1
Yellow bass	.2	.1
Green sunfish	.2	.1
White bass	.1	.1
Skipjack herring	.1	.3
Golden shiner	.1	.1
Spotfin shiner	.1	-
Flathead catfish	-	.6
Golden redhorse	-	.6
River carpsucker	-	.2
Shorthead redhorse	-	.1
Sauger	-	-
Blue catfish	-	-
Spotted gar	-	-
Longnose gar	-	-
Orangespotted sunfish	-	-
Mooneye	-	-
Mosquitofish	-	-
Hogsucker	-	-
Bluntnose minnow	-	-
Total	100.0	99.8

- = Less than .05

Table C.20 Comparison of Rotenone Survey Results in Coves of Chickamauga Reservoir - 1970-1973.

Cove Area	Year	Sample Area Size (ac)	No. Fish per Acre	Lb Fish per Acre
Nance Hollow	1970	2.20	2,910	216.6
	1971	3.10	2,574	251.4
	1972	3.10	4,701	319.2
	1973	3.10	3,519	252.0
Chigger Point	1970	2.24	3,709	200.6
	1971	2.40	1,159	167.8
	1972	2.40	6,396	205.5
	1973	2.40	3,581	176.3
Sale Creek	1970	1.50	3,094	200.7
	1971	2.30	3,734	88.7
	1972	2.30	4,427	206.9
	1973	2.30	4,621	179.9
TRM 508.0	1971	1.05	5,549	321.9
	1972	1.05	10,728	511.3
	1973	1.05	12,919	633.5

TABLE C.21

Fish Species List from Cove
Rotenone Samples in Chickamauga Reservoir

Number	Common Name	Scientific Name
1	Chestnut lamprey	Icythyomyzon castaneus (Girard)
2	Spotted gar	Lepisosteus oculatus (Winchell)
3	Longnose gar	L. osseus (Linnaeus)
4	Shortnose gar	L. platostomus (Rafinesque)
5	Skipjack herring	Alosa chrysochloris (Rafinesque)
6	Gizzard shad	Dorosoma cepodianum (Lesueur)
7	Threadfin shad	D. petenense (Gunther)
8	Mooneye	Hiodon tergisus (Lesueur)
9	Stoneroller	Campostoma anomalum (Rafinesque)
10	Rosyside dace	Clinostomus funduloides (Girard)
11	Carp	Cyprinus carpio (Linnaeus)
12	Silver chub	Hybopsis storeriana (Kirtland)
13	Golden shiner	Notemigonus crysoleucas (Mitchill)
14	Emerald shiner	Notropis atherinoides (Rafinesque)
15	Ghost shiner	N. buchanani (Meek)
16	Spotfin shiner	N. spilopterus (Cope)
17	Striped shiner	N. chrysocephalus (Rafinesque)
18	Bluntnose minnow	Pimephales notatus (Rafinesque)
19	Bullhead minnow	P. vigilax (Baird and Girard)
20	River carpsucker	Carpiodes carpio (Rafinesque)
21	Quillback carpsucker	C. cyprinus (Lesueur)
22	Highfin carpsucker	C. velifer (Rafinesque)
23	Northern hog sucker	Hypentelium nigricans (Lesueur)
24	Smallmouth buffalo	Ictiobus bubalus (Rafinesque)
25	Bigmouth buffalo	I. cyprinellus (Valencinnes)
26	Black buffalo	Ictiobus niger (Rafinesque)
27	Spotted sucker	Minytrema melanops (Rafinesque)
28	Silver redhorse	Moxostoma anisurum (Rafinesque)
29	Shorthead redhorse	M. macrolepidotum (Lesueur)
30	River redhorse	M. carinatum (Cope)

TABLE C.21 (continued)

Number	Common Name	Scientific Name
31	Black redhorse	M. duquesnei (Lesueur)
32	Golden redhorse	M. erythrurum (Rafinesque)
33	Blue catfish	Ictalurus furcatus (Lesueur)
34	Black bullhead	I. melas (Rafinesque)
35	Channel catfish	I. punctatus (Rafinesque)
36	Flathead catfish	Pylodictis olivaris (Rafinesque)
37	Blackstripe topminnow	Fundulus notatus (Rafinesque)
38	Blackspotted topminnow	F. olivaceus (Storer)
39	Mosquitofish	Gambusia affinis (Baird & Girard)
40	White bass	Morone chrysops (Rafinesque)
41	Yellow bass	M. mississippiensis (Jorden and Eigenma
42	Rock bass	Ambloplites rupestris (Rafinesque)
43	Warmouth	Lepomis gulosus (Cuvier)
44	Redbreast sunfish	L. auritus (Linnaeus)
45	Green sunfish	L. cyanellus (Rafinesque
46	Orangespotted sunfish	L. humilis (Girard)
47	Bluegill	L. macrochirus (Rafinesque)
48	Longear sunfish	L. megalotis (Rafinesque)
49	Redear sunfish	L. microlophus (Gunther)
50	Smallmouth bass	Micropterus dolomieui (Lacepede)
51	Spotted bass	M. punctulatus (Rafinesque)
52	Largemouth bass	Micropterus salmoides (Lacepede)
53	White crappie	Pomoxis annularis (Rafinesque)
54	Black crappie	P. nigromaculatus (Lesueur)
55	Rainbow darter	Etheostoma caeruleum (Storer)
56	Yellow perch	Perca flavescens (Mitchill)
57	Logperch	Percina caprodes (Rafinesque)
58	Sauger	Stizostedion canadense (Smith)
59	Freshwater drum	Aplodinotus grunniens (Rafinesque)
60	Brook silverside	Labidesthes sicculus (Cope)

Table C.22 Estimated annual harvest from TVA reservoirs - 1971-1973.

Reservoir	Annual Pounds Harvested
Guntersville	1,938,000
Wheeler	1,938,000
Wilson	806,000
Fort Loudon	593,000
Nickajack	491,000
Douglas	422,000
Chickamauga	373,000
Watts Bar	107,000
Cherokee	40,000

Table C.23 1972 Chickamauga Reservoir commercial fisherman survey (actual catch of 24.32 percent of fisherman).

Species	Pounds Caught	Pounds sold to dealers	Pounds sold to individuals
Catfish	45,409	23,858	21,141
Buffalo	34,870	31,400	3,320
Carp	10,180	7,000	3,080
Drum	160	160	-
Spoonbill	160	160	-
Others	-	-	-
Total	90,779	62,578	27,541

Table C.24(a)

Harvest rate of sport fish, January 1, 1972, through December 31, 1975, Chickamauga Reservoir, Tennessee

	Harvest per hour of fishing		Harvest per hectare	
	Number	Biomass (Kg)	Number	Biomass (Kg)
1972	0.85	0.23	18.3	5.0
1973	0.97	0.36	15.5	5.8
1974	0.94	0.21	13.0	3.0
1975	0.76	0.19	11.4	2.9

Table C.24(b)

Fish harvest in Watts Bar Tailwater, TRM 505.3 to TRM 529.9, 1032.4 total hours fishing from January 1 to June 30, 1977

Species	No.	%	Wt. (lbs)	%	Av. Wt. (lb)
White crappie	426	43.1	139.9	30.8	0.33
Black crappie	7	0.7	10.2	2.3	1.46
Largemouth bass	8	0.8	10.2	2.3	1.28
Spotted bass	2	0.2	2.9	0.6	1.45
Smallmouth bass	6	0.6	6.5	1.4	1.08
White bass	26	2.6	20.8	4.6	0.80
Yellow bass	10	1.0	2.8	0.6	0.28
Bluegill	83	8.4	36.3	8.0	0.44
Redear sunfish	14	1.4	4.8	1.1	0.34
Other sunfish	3	0.3	0.8	0.2	0.27
Walleye	1	0.1	0.3	0.1	0.30
Sauger	134	13.6	89.7	19.8	0.67
Channel catfish	184	18.6	75.3	16.6	0.41
Flathead catfish	1	0.1	1.3	0.3	1.30
Blue catfish	21	2.1	24.1	5.3	1.10
Drum	52	5.3	21.7	4.8	0.42
Yellow perch	7	0.7	1.9	0.4	0.27
Rockfish	1	0.1	1.7	0.4	1.7
Paddlefish	1	0.1	1.2	0.3	1.2
Spotted sucker	1	0.1	1.5	0.3	1.5
TOTAL	988		454.1		0.46

(Source: TVA, Letter from J. Gilleland to E. Case, dated May 19, 1978)

Table C.25 Estimated catch by species, January 1, 1972, through December 31, 1975, Chickamauga Reservoir, Tennessee.

Species	Number				Biomass (Kg)			
	1972	1973	1974	1975	1972	1973	1974	1975
White crappie	99,838	143,392	55,873	66,444	23,764	33,145	11,441	13,265
Bluegill	73,845	38,102	75,749	46,348	8,913	5,980	9,994	6,942
White bass	29,108	12,005	13,779	10,850	10,470	3,857	4,340	2,571
Channel catfish	20,901	13,517	14,213	15,370	9,501	10,541	6,805	7,546
Drum	17,414	4,557	4,229	544	6,311	1,479	1,292	127
Largemouth bass	15,972	10,066	12,295	16,916	8,425	5,286	5,684	9,076
Skipjack herring	3,304	1,378			1,336	210		
Blue catfish	5,746	5,106	3,108	2,360	2,432	24,947	1,147	753
Redear sunfish	6,494	3,449	10,446	6,916	1,007	610	1,630	1,348
Spotted bass	5,508	3,434	4,025	4,537	1,845	1,427	1,554	1,526
Smallmouth bass	4,283	97	163	362	1,827	42	91	101
Black crappie	1,874	2,068	4,215	4,234	440	474	948	1,072
Sauger	1,410	3,679	4,737	3,502	981	1,374	1,651	887
Other sunfish*	398	841	259	273	53	123	21	33
Yellow perch	564	909	566		73	179	111	
Yellow bass	390	225	475	747	70	79	98	84
Flathead catfish	633	286	30	497	364	216	14	955
Rockbass	323	564			138	103		
Bullhead	142		110		86		107	
Carp	270	96	28		704	185	57	
Walleye	68		137		124		188	
Smallmouth buffalo	42	7			103	8		
Longnose gar	90				90			
Rockfish	12	842	33		16	1,243	62	
Mooneye	18				7			
Minnows		76				7		
Paddlefish			48				44	
Total	288,647	244,696	204,518	179,900	79,080	91,515	47,279	46,286

*Includes longear sunfish, green sunfish, warmouth, etc.

REFERENCES FOR APPENDIX C

1. Tennessee Valley Authority, Final Environmental Statement for Watts Bar Nuclear Plant, Units 1 and 2, TVA-OHES-EIS-72-9, Chattanooga, Tenn., November 9, 1972.

2. Tennessee Valley Authority, Environmental Information for Watts Bar Nuclear Plant, Units 1 and 2, November 18, 1976.

3. Tennessee Valley Authority, Environmental Information, Watts Bar Nuclear Plant, Units 1 and 2, Supplement 1, 1977.

4. Tennessee Valley Authority, Aquatic Biota, (Non-fish), April 1977.

5. Federal Register 41 (115) June 14, 1976.

6. Fuller, Samuel L. H.. "Clams and Mussels." Chapter 8 in C. W. Hart, Jr. and Samuel L. H. Fuller, eds. Pollution Ecology of Freshwater Invertebrates. Academic Press, Inc., New York, 1974.

7. Op. Cit., Ref. 1, page 1.1-21.

8. Op. Cit., Ref. 3, page 3-10.

9. Mitchell, Vester P., Jr., and Billy B. Carroll, Survey of Sport Fishing, Chickamauga Reservoir, January 1, 1972 through December 31, 1975, Tennessee Valley Authority, Div. Forestry, Fisheries and Wildlife Development, Muscle Shoals, Alabama, 1976.

APPENDIX D

EXPLANATION OF BENEFIT-COST SUMMARY, TABLE 10.1

ECONOMIC IMPACT OF PLANT OPERATION

DIRECT BENEFITS - The staff has evaluated the effect of the Watts Bar Nuclear Plant production of baseload energy for no load growth situation (Section 9.3.2).

INDIRECT BENEFITS - See Section 5.6.

ECONOMIC COSTS

Operating costs - Supplied by Applicant.[6]

Decommissioning costs - The staff has estimated decommissioning costs in 1975 dollars at $59 million.

1. Deactivating the reactors.
2. Decontaminating of process systems and areas of plant.
3. Removing all nuclear fuel from the site for recovery of fuel materials and ultimate disposal of radioactive wastes.
4. Sealing of building or portion of building containing activated process piping and components by means of blocking, bolting, or welding plates over openings, etc.
5. Dismantling and sealing of all gaseous and liquid waste systems and effluent lines.
6. Maintaining some security and fire systems.
7. Ultimate dismantling of station.

ENVIRONMENTAL IMPACT OF PLANT

(The index numbers used in this and the next section correspond to those used in Table 10.1.)

Item 1.1 - CONSUMPTION (nuclear station consumption) - The amount of water consumed by the applicant is estimated at 1.4 cubic meters for operation. This consumption amounts to 45,000,000 cubic meters/year.

Item 1.2 - HEAT DISCHARGE TO NATURAL WATER BODY.

Item 1.2.1 - Cooling capacity of water body - Btu/hr rejected heat = 9×10^8 (max).

Item 1.2.2 - Aquatic biota - Insignificant.

Item 1.2.3 - Migratory fish - Insignificant.

Item 1.3 - CHEMICAL DISCHARGE TO NATURAL WATER BODY. (Includes items 1.3.1, 1.3.2, 1.3.3 and 1.3.4)

Chemicals will be discharged to the Chickamauga Reservoir.

Item 1.4 - RADIONUCLIDE CONTAMINATION OF NATURAL WATER BODY. Radionuclides will be released to the condenser cooling water. Radioactivities are expected to be 0.22 Ci/year (total) for all radionuclides except tritium and 520 Ci/year (total) for tritium. No detectable effect is expected from these releases (Sections 3.2.3, 5.5.1 and 5.5.2).

Item 1.5 - CHEMICAL CONTAMINATION OF GROUNDWATER. See item 1.3, above.

Item 1.6 - RADIONUCLIDE CONTAMINATION OF GROUNDWATER. See item 1.4, above.

Item 1.7 - RAISING/LOWERING OF GROUNDWATER LEVELS. (Includes items 1.7.1 and 1.7.2). No effect is expected.

Item 1.8 - EFFECTS ON NATURAL WATER BODY OF INTAKE STRUCTURE AND CONDENSER COOLING SYSTEMS - Unknown (Section 5.4).

Item 1.9 - NATURAL WATER DRAINAGE.

Item 1.9.1 - Flood Control - No damage to station or immediate vicinity.

Item 1.9.2 - Erosion control - No significant erosion is expected.

Item 2. - IMPACT ON AIR

Item 2.1 - CHEMICAL DISCHARGE TO AMBIENT AIR

Item 2.1.1 - Air Quality -- chemical - No impact.

Item 2.1.2 - Air Quality -- odor - No impact.

Item 2.2 - RADIONUCLIDES DISCHARGED TO AMBIENT AIR

Item 2.2.1 - Section 3.2.3.

Item 2.3 - FOGGING AND ICING - The added evaporation will increase the amount of fogging in the vicinity of the plant, but the extra vapor discharged to the atmosphere does not appear to be such that the fogging will be severe to excessive.

Item 2.4 - Section 5.4.1.

Item 3. - See Section 5.5.

SOCIETAL IMPACT OF PLANT

Item 1. - OPERATIONAL FUEL DISPOSITION

Item 1.1 - FUEL TRANSPORT - ten truck shipments of new fuel plus 13 train shipments of radioactive spent fuel assemblies per year.

Item 1.2 - FUEL STORAGE - the staff assumes storage of new fuel to be provided for in plant design within the reactor building.

Item 1.3 - WASTE PRODUCTS - Onsite storage of spent fuel assemblies is normal and is assumed for Watts Bar.

Item 2. - LABOR - Negligible impact (Section 5.6).

APPENDIX E.

NPDES PERMIT

United States
Environmental Protection
Agency

Region 4
345 Courtland Street NE
Atlanta GA 30308

Alabama, Georgia, Florida,
Mississippi, North Carolina,
South Carolina, Tennessee,
Kentucky

EPA

NOV 27 1978

CERTIFIED MAIL
RETURN RECEIPT REQUESTED

Dr. Harry G. Moore, Jr.
Acting Director of Environmental
Planning
Tennessee Valley Authority
268 401 Building
Chattanooga, Tennessee 37401

RE: Watts Bar Nuclear Plant
NPDES Permit No. TN0026168

Dear Dr. Moore:

Enclosed is a National Pollutant Discharge Elimination System permit and a copy of my 316(a) findings for the above referenced facility. This NPDES permit constitutes my determination under Title 40, Code of Federal Regulations, Section 125.35, as amended (30FR27080, July 24, 1976).

In accordance with the Environmental Protection Agency regulations found in 40 CFR 125 (as amended July 24, 1974 39FR27076), this permit will become effective on the date noted, provided that no request for an adjudicatory hearing is filed with the Agency. In the event that such a request is filed, the contested provisions of the permit will be stayed and will not become effective until the administrative review process is complete. All uncontested portions of the permit will be considered operative on the effective date and must be complied with by the facility.

If you wish an adjudicatory hearing, a request must be submitted to the Regional Hearing Clerk within 10 days from receipt of this letter. The request will be timely if mailed by Certified Mail within the ten (10) day period. For the request to be valid, it must conform to the requirements of 40 CFR 125.36(b) as noted above.

Responses to your letter of June 30, 1978 relative to the Public Notice and Draft Permit are included as Attachment A. Responses have been provided in the same sequence as your comments.

If you have any questions about the permit, please contact the Coordinator, Thermal Analysis Unit at 257-2328. Information on the request for procedures and legal matters may be obtained by contacting the Chief, Legal Support Branch at 257-3505.

Sincerely yours,

Paul J. Traina
Director
Enforcement Division

Enclosures

cc (Attachments):

Mr. Elmo Lunn, Director
Division of Water Quality Control

Mr. Jack McCormick
Regional Engineer
Chattanooga Regional Office

Mr. Jim Morris
Tennessee Valley Authority

✓ Ms. Susie Keblusek
Nuclear Regulatory Commission

☆ U.S. GOVERNMENT PRINTING OFFICE 1976 — 746-732/1364

Attachment A

Responses to TVA Letter of June 30, 1978

Watts Bar Nuclear Plant

1. Short d ration of permit and Part III.P. These items have been discussed with Mr. James Burger and support material provided.

2. Part I, Serial 002. We have reviewed your request for reduced monitoring; however, as indicated in our letter of April 20, 1978 we do feel that this monitoring should be conducted. Subsequent to establishment of a data base, a request for reduction or elimination of monitoring may be submitted in accordance with Part III.B.

3. Part I, Serials 003, 004 and 008 - ph limitations. We feel that the limitations should be retained for the facility for the following reasons: 003-required by State Certification. 004-mute since wastes are to be ponded, and 008-necessary to achieve adequate treatment of condensate demineralizer wastes.

4. Part I, serial 005. Requested deletions have been made.

5. Part I, serial 008. Requested foot note has been added.

6. Part III.J. Requested approval given.

7. Part III.K. Requested approval given.

Permit No. TN0020168
Application No. TN0020168

AUTHORIZATION TO DISCHARGE UNDER THE
NATIONAL POLLUTANT DISCHARGE ELIMINATION SYSTEM

In compliance with the provisions of the Federal Water Pollution Control Act, as amended, (33 U.S.C. 1251 et. seq; the "Act"),

Tennessee Valley Authority
268 401 Building
Chattanooga, Tennessee 37401

is authorized to discharge from a facility located at

Watts Bar Nuclear Plant
Units 1 and 2
Spring City, Tennessee

to receiving waters named Tennessee River (Mi 527.5) and Yellow Creek from discharge points numerated herein as serial numbers 001, 002, 003, 004, 005, 006, 007, 008, 009, 010, 011, 012, 013, 014, 015, 016, 017, and 018

during the effective period of this permit

in accordance with effluent limitations, monitoring requirements and other conditions set forth in Parts I, II, and III hereof.

This permit is a modification of the NPDES permit issued for this facility on December 5, 1974, and replaces that permit in its entirety. This modified permit shall become effective January 1, 1979.

This modified permit and the authorization to discharge shall expire at midnight, September 30, 1980. Permittee shall not discharge after the above date of expiration without prior authorization. In order to receive authorization to discharge beyond the above date of expiration, the permittee shall submit such information, forms, and fees as are required by the Agency authorized to issue NPDES permits no later than 180 days prior to the above date of expiration.

Signed this 27th day of November, 1978

Paul J. Traina, Director
Enforcement Division

A. EFFLUENT LIMITATIONS AND MONITORING REQUIREMENTS

During the period beginning on start of discharge and lasting through expiration the permittee is authorized to discharge from outfall(s) serial number(s) 002 - Diffuser Discharge to the Tennessee River

Such discharges shall be limited and monitoring by the permittee as specified below:

Effluent Characteristic	Discharge Limitations	Monitoring Requirements	
	Instantaneous Maximum	Measurement Frequency	Sample Type
Flow-m³/Day (MGD)	N/A	Continuous	Recorder
Temperature °C(°F)	35.0(95.0) 1/	Continuous	Recorder
Total Chlorine Residual	See Below	1/week 2/	Multiple grabs
Additional Monitoring	See Below	1/month	8-hour composite

Chlorine may be discharged continuously, however, total residual chlorine shall not exceed a maximum instantaneous concentration of 0.10 mg/l. In the event that the units cannot be operated at or below this level of chlorination, the permittee may submit a demonstration, based on biological toxicity data, that discharge of higher levels of chlorine are consistent with toxicity requirements of the Tennessee Water Quality Standards. Effluent limitations will be modified consistent with an acceptable demonstration.

Direct overflow from the yard holding pond to the Tennessee River is allowed under emergency conditions to protect dike stability, but only to the minimum extent necessitated by the emergency. Notification of such overflow shall be provided to the Director, Enforcement Division and to the State Director within five days after any occurrence. On each occurrence, a grab sample shall be collected for suspended solids analysis and the results of such analysis shall be reported either with the notification of overflow or within 15 days of the occurrence.

Additional monitoring shall include total suspended, settleable and total dissolved solids; ammonia nitrogen; and total copper, iron, manganese and zinc.

The pH shall not be less than 6.0 standard units nor greater than 9.0 standard units and shall be monitored 1/week on a grab sample.

There shall be no discharge of floating solids or visible foam in other than trace amounts.

Samples taken in compliance with the monitoring requirements specified above shall be taken at the following location(s): plant discharge prior to entry into the Tennessee River.

1/ The receiving water shall not exceed (1) a maximum water temperature change of 3°C (5.4°F) relative to an upstream control point, (2) a maximum temperature of 30.5°C (86.9°F), except when upstream temperatures approach or exceed this value, and (3) a maximum rate of change of 2°C (3.6°F) per hour outside of a mixing zone which shall not exceed (1) a maximum width of 240 feet nor (2) a 240- foot linear downstream length.

2/ During the first two-month period of substantially full power operation, analyses shall follow each application of chlorine until sufficient operating experience has been obtained to assure compliance with limitations and then analysis frequency may be reduced to one day per week.

A. EFFLUENT LIMITATIONS AND MONITORING REQUIREMENTS

During the period beginning on effective date and lasting through expiration the permittee is authorized to discharge from outfall(s) serial number(s) 001 - Point source(s) runoff from construction (includes treated domestic waste and concrete washing wastes) to Yellow Creek

Such discharges shall be limited and monitored by the permittee as specified below:

Effluent Characteristics	Discharge Limitations	Monitoring Requirements	
	Instantaneous Maximum	Measurement Frequency	Sample Type
Flow-m³/Day (MGD)	N/A	1/week	Grab
Total Suspended Solids (mg/l)	1/	1/week	Grab
Settleable Solids (ml/l)	N/A	1/week	Grab
Turbidity	N/A	1/week	Grab

1/ Pending repromulgation of effluent guidelines for this waste category, limitations on total suspended solids shall not be applicable. Within 90 days of reproMulgation, permittee shall submit a proposed implementation schedule and shall expeditiously complete necessary facilities, if any, to assure compliance with such reproMulgated regulations. In the interim, construction practices and control of site runoff shall be consistent with sound engineering practices such as those contained in "Guidelines for Erosion and Sediment Control, Planning and Implementation," EPA-R2-72-015 (August, 1972) or "Processes, Procedures and Methods to Control Pollution Resulting from all Construction Activity," EPA-430/9-73-007 (October, 1973). Where an impoundment is utilized by permittee, it shall be capable of containing a 10-year, 24-hour rainfall event.

The pH shall not be less than 6.0 standard units nor greater than 9.0 standard units and shall be monitored 1/week.

There shall be no discharge of floating solids or visible foam in other than trace amounts.

Samples taken in compliance with the monitoring requirements specified above shall be taken at the following location(s): Point(s) of discharge from the construction yard drainage pond prior to mixing with any other waste streams.

A. EFFLUENT LIMITATIONS AND MONITORING REQUIREMENTS

During the period beginning on effective date and lasting through expiration the permittee is authorized to discharge from outfall(s) serial number(s) 004 1/ - Preoperational Metal Cleaning Wastes

Such discharges shall be limited and monitored by the permittee as specified below:

Effluent Characteristic	Discharge Limitations		Monitoring Requirements	
	Daily Average	Daily Maximum	Measurement Frequency	Sample Type
Flow—m^3/Day (MGD)	N/A	N/A	1/day	Weir or pump log
Oil and Grease (mg/l)	15	20	2/	Grab
Total Suspended Solids (mg/l)	30	100	2/	8-hr. composite
Copper, Total (mg/l)	1.0	1.0	2/	8-hr. composite
Iron, Total (mg/l)	1.0	1.0	2/	8-hr. composite
Phosphorus, as P (mg/l)	1.0	1.0	2/	8-hr. composite

Metal cleaning wastes shall mean any cleaning compounds, rinse waters, or any other waterborne residue derived from cleaning any metal process equipment.

The quantity of pollutants discharged in metal cleaning wastes shall not exceed the quantity determined by multiplying the above concentrations, times the volume of metal cleaning wastes.

1/ Serial number assigned for identification and monitoring purposes.
2/ On start of discharge and once/week thereafter until termination of discharge with one sample taken immediately prior to termination of discharge.

The pH shall not be less than 6.0 standard units nor greater than 9.0 standard units and shall be monitored 1/day.

There shall be no discharge of floating solids or visible foam in other than trace amounts.

Samples taken in compliance with the monitoring requirements specified above shall be taken at the following location(s): discharge from the metal cleaning wastes treatment facility(s) prior to mixing with any other waste stream discharging through Serial Number 002.

NOTE: In the event that the permittee provides land disposal or spray irrigation of these wastes, the above limitations and monitoring requirements shall not be applicable. Notification of proposed disposal in this manner shall be provided to EPA and the State Director. Permittee must obtain approvals from the Tennessee Division of Water Quality Control and EPA prior to any land disposal or spray irrigation of these wastes. Said approvals shall be based upon site inspections and review of appropriate engineering submittals.

A. EFFLUENT LIMITATIONS AND MONITORING REQUIREMENTS

During the period beginning on effective date and lasting through expiration the permittee is authorized to discharge from outfall(s) serial number(s) 003 1/ - Construction Sewage Treatment Plant Effluent

Such discharge shall be limited and monitored by the permittee as specified below:

Effluent Characteristic	Discharge Limitations mg/l except as noted		Monitoring Requirements	
	Daily Avg.	Daily Max.	Measurement Frequency	Sample Type
Flow—m^3/Day (MGD)	136(0.036)			
BOD 5	30	60	1/day	Grab
Total Suspended Solids	30	50	1/2 weeks	Grab
Settleable Solids (ml/l)	1.0	1.0	1/2 weeks	Grab
Chlorine Residual	N/A	N/A	1/day	Grab
Fecal Coliform 2/ (organisms/100 ml)	N/A	N/A	1/2 weeks	Grab

Effluent shall be aerobic at all times.

The pH shall not be less than 6.0 standard units nor greater than 9.0 standard units and shall be monitored 1/week.

There shall be no discharge of floating solids or visible foam in other than trace amounts.

Samples taken in compliance with the monitoring requirements specified above shall be taken at the following location(s): Sewage treatment plant effluent prior to mixing with any other waste stream discharging through Serial Number 001.

1/ Serial number assigned for identification and monitoring purposes.
2/ Geometric mean.

NOTE: See Certification Requirement 4.c. (Attachment C) for more stringent limitations and monitoring requirements.

A. EFFLUENT LIMITATIONS AND MONITORING REQUIREMENTS

During the period beginning on start of discharge and lasting through expiration the permittee is authorized to discharge from outfall(s) serial number(s) 006 1/ - Liquid Radwaste System

Such discharges shall be limited and monitored by the permittee as specified below:

Effluent characteristic	Discharge Limitations		Monitoring Requirements	
	Daily Average	Daily Maximum	Measurement Frequency	Sample Type
Flow-m³/Day (MGD)	N/A	N/A	1/batch	Calculation
Total Suspended Solids (mg/l)	15	20	1/batch	Grab

Limitations and monitoring requirements shall be applicable only when liquid radwaste system effluent is directed to any waste stream which discharges to Waters of the United States.

1/ Serial number assigned for identification and monitoring purposes.

There shall be no discharge of floating solids or visible foam in other than trace amounts.

Samples taken in compliance with the monitoring requirements specified above shall be taken at the following location(s): discharge from radwaste treatment system prior to mixing with any other waste stream.

A. EFFLUENT LIMITATIONS AND MONITORING REQUIREMENTS

During the period beginning on start of discharge and lasting through expiration the permittee is authorized to discharge from outfall(s) serial number(s) 005 1/ - Operational Sewage Treatment Plant Effluent

Such discharges shall be limited and monitored by the permittee as specified below:

Effluent Characteristic	Discharge Limitations mg/l except as noted		Monitoring Requirements	
	Daily Avg.	Daily Max.	Measurement Frequency	Sample Type
Flow-m³/Day (MGD)	45 (0.012)			
BOD 5	30	60	1/day	Grab
Total Suspended Solids	30	60	1/month	Grab
			1/month	Grab

Effluent shall be aerobic at all times.

There shall be no discharge of floating solids or visible foam in other than trace amounts.

Samples taken in compliance with the monitoring requirements specified above shall be taken at the following location(s): Sewage treatment plant effluent prior to mixing with any other waste stream.

1/ Serial number assigned for identification and monitoring purposes.

NOTE: See Certification requirement 4.e. (Attachment C) for more stringent limitations and monitoring requirements.

A. EFFLUENT LIMITATIONS AND MONITORING REQUIREMENTS

During the period beginning on start of discharge and lasting through expiration the permittee is authorized to discharge from outfall(s) serial number(s) 008 1/ - Condensate Demineralizer System

Such discharges shall be limited and monitored by the permittee as specified below:

Effluent Characteristic	Discharge Limitations 2/				Monitoring Requirements 2/	
	Kg/day (lbs/day)		Other Units (mg/l)			
	Daily Avg.	Daily Max.	Daily Avg.	Daily Max.	Measurement Frequency	Sample Type
Flow-m^3/Day (MGD)	N/A	N/A	N/A	N/A	2/week	Grab
Oil and Grease	2.5(5.4)	3.3 (7.2)	15	20	2/week	Grab
Total Suspended Solids	4.9(10.8)	16.4(36.1)	30	100	2/week	Grab

The pH shall not be less than 6.0 standard units nor greater than 9.0 standard units and shall be monitored 1/week on a grab sample.

There shall be no discharge of floating solids or visible foam in other than trace amounts.

Samples taken in compliance with the monitoring requirements specified above shall be taken at the following location(s): effluent from condensate demineralizer system prior to mixing with any other waste stream.

1/ Serial number assigned for identification and monitoring purposes.

2/ Limitations and monitoring requirements are not applicable during period when discharge is to the radwaste treatment system (serial number 005).

A. EFFLUENT LIMITATIONS AND MONITORING REQUIREMENTS

During the period beginning on start of discharge and lasting through expiration the permittee is authorized to discharge from outfall(s) serial number(s) 007 1/ - Neutral Waste Sump (neutralizer waste tank)

Such discharges shall be limited and monitored by the permittee as specified below:

Effluent Characteristic	Discharge Limitations				Monitoring Requirements	
	kg/day (lbs/day)		Other Units (mg/l)			
	Daily Avg	Daily Maximum	Daily Avg	Daily Maximum	Measurement Frequency	Sample Type
Flow-m^3/Day (MGD)	N/A	N/A	N/A	N/A	2/week	Grab or pump logs
Oil and Grease	2.0 (4.5)	2.7 (6.0)	15	20	2/week	Grab
Total Suspended Solids	4.1 (9.0)	13.6 (30.0)	30	100	2/week	Grab

1/ Serial number assigned for identification and monitoring purposes.

There shall be no discharge of floating solids or visible foam in other than trace amounts.

Samples taken in compliance with the monitoring requirements specified above shall be taken at the following location(s): individual discharges prior to mixing with any other waste streams.

A. EFFLUENT LIMITATIONS AND MONITORING REQUIREMENTS

During the period beginning on start of discharge and lasting through expiration the permittee is authorized to discharge from outfall(s) serial number(s) 010 1/- Hypochlorite Building Drains, 011 1/ - Service Building Sump, 012 1/ - Diesel Generator Building Drains, 013 1/ Additional Equipment Building Drains, 014 1/and 015 1/- Auxiliary Building Sumps, 016 1/- CCW Pump Station Sump, and 017 1/- Cooling Tower Desilting Basin Effluent
Such discharges shall be limited and monitored by the permittee as specified below:

Effluent Characteristic	Discharge Limitations		Monitoring Requirements	
	Daily Avg.	Daily Max.	Measurement Frequency	Sample Type
Flow-m^3/Day (MGD)	N/A	N/A	2/week	Grab or pump logs
Oil and Grease (mg/l)	15	20	2/week	Grab
Total Suspended Solids (mg/l)	30	100	2/week	Grab

The quantity of pollutants discharged from each serial number shall not exceed the quantity determined by multiplying the flow from that waste source times the concentrations listed above.

There shall be no discharge of floating solids or visible foam in other than trace amounts.

Samples taken in compliance with the monitoring requirements specified above shall be taken at the following location(s): discharge from each source prior to discharge to the yard drainage system.

1/ Serial numbers assigned for identification and monitoring purposes.

A. EFFLUENT LIMITATIONS AND MONITORING REQUIREMENTS

During the period beginning on start of discharge and lasting through expiration the permittee is authorized to discharge from outfall(s) serial number(s) 009 1/- Turbine Building Station Sump

Such discharges shall be limited and monitored by the permittee as specified below:

Effluent Characteristic	Discharge Limitations				Monitoring Requirements	
	Kg/day(lbs/day)		Other units (mg/l)		Measurement Frequency	Sample Type
	Daily Avg	Daily Max	Daily Avg.	Daily Max		
Flow-m^3/Day (MGD)	N/A	N/A	N/A	N/A	2/week	Grab or pump logs
Oil and Grease	62(140)	220(480)	15	20	2/week	Grab
Total Suspended Solids	120(280)	1000(2400)	30	100	2/week	Grab

There shall be no discharge of floating solids or visible foam in other than trace amounts.

Samples taken in compliance with the monitoring requirements specified above shall be taken at the following location(s): station sump discharge prior to mixing with any other waste stream.

1/ Serial number assigned for identification and monitoring purposes.

A. EFFLUENT LIMITATIONS AND MONITORING REQUIREMENTS

During the period beginning on start of discharge and lasting through expiration the permittee shall monitor serial number(s) 019 1/ - Plant Intake

Such discharges shall be limited and monitored by the permittee as specified below:

Effluent Characteristic	Discharge Limitations		Monitoring Requirements	
	Daily Average	Daily Maximum	Measurement Frequency	Sample Type
Flow—m^3/Day (MGD)	N/A	N/A	Continuous	Pump logs
Temperature °C(°F)	N/A	N/A	Continuous	Recorder
Additional Monitoring	See Below		1/month	8-hour composite

Additional monitoring shall include total suspended, settleable, and total dissolved solids; ammonia nitrogen; and total copper, iron, manganese, and zinc.

Samples taken in compliance with the monitoring requirements specified above shall be taken at the following location(s):

Plant Intake

1/ Serial number assigned for identification and monitoring purposes.

6 3

A. EFFLUENT LIMITATIONS AND MONITORING REQUIREMENTS

During the period beginning on start of discharge and lasting through expiration the permittee is authorized to discharge from outfall(s) serial number(s) 013 1/ - Steam Generator Blowdown

Such discharges shall be limited and monitored by the permittee as specified below:

Effluent Characteristic	Discharge Limitations		Monitoring Requirements	
	Daily Average	Daily Maximum	Measurement Frequency	Sample Type
Flow—m^3/Day (MGD)	N/A	N/A	1/month	Instantaneous
Oil and Grease (mg/l)	15	20	1/month	Grab
Total Suspended Solids (mg/l)	30	100	1/month	Grab
Copper, Total (mg/l)	1.0	1.0	1/month	Grab
Iron, Total (mg/l)	1.0	1.0	1/month	Grab

Limitations and monitoring requirements are not applicable if blowdown is discharged to the condensate demineralizer system.

The quantity of pollutants discharged shall not exceed the quantity determined by multiplying the flow of steam generator blowdown times the concentration listed above.

There shall be no discharge of floating solids or visible foam in other than trace amounts.

Samples taken in compliance with the monitoring requirements specified above shall be taken at the following location(s): discharge from the blowdown prior to mixing with any other waste stream.

1/ Serial number assigned for identification and monitoring purposes.

B. SCHEDULE OF COMPLIANCE

1. The permittee shall achieve compliance with the effluent limitations specified for discharges in accordance with the following schedule.

   a. Compliance with effluent limitations - effective date or start of discharge as applicable (001 through 017)
   b. Preoperational aquatic monitoring program (III. J.)
      (1) Implement - Under way
      (2) Report - January 31, 1980
   c. PCB Control Report (III.C.) - 1/31/79
   d. Condenser tube report (III. H.)
      (1) Study plan - one year prior to commercial operation date of Unit 1
      (2) Reports - frequency to be developed after submission of study plan
   e. Operational aquatic monitoring program (III. K.)
      (1) Details of program submitted September 30, 1979.
      (2) Implement - commercial operation date of Unit 1
      (3) First report - 15 months after implementation date
      (4) Subsequent reports - annually after the first report
   f. Plume report (III G.) - 15 months after commercial operation date of Unit 2

2. No later than 14 calendar days following a date identified in the above schedule of compliance, the permittee shall submit either a report of progress or, in the case of specific actions being required by identified dates, a written notice of compliance or noncompliance. In the latter case, the notice shall include the cause of noncompliance, any remedial actions taken, and the probability of meeting the next scheduled requirement.

C. MONITORING AND REPORTING

1. *Representative Sampling*

Samples and measurements taken as required herein shall be representative of the volume and nature of the monitored discharge.

2. *Reporting*

Monitoring results obtained during the previous 3 months shall be summarized for each month and reported on a Discharge Monitoring Report Form (EPA No. 3320-1), postmarked no later than the 28th day of the month following the completed reporting period. The first report is due on * . Duplicate signed copies of these, and all other reports required herein, shall be submitted to the Regional Administrator and the State at the following addresses:

Chief, Water Enforcement Branch Environmental Protection Agency 345 Courtland Street, N.E. Atlanta, Georgia 30308	AND	Director, Division of Water Quality Control Tenn. Dept. of Public Health 621 Cordell Hull Building Nashville, Tennessee 37219

3. *Definitions*

   a. The "daily average" concentration means the arithmetic average (weighted by flow) of all the daily determinations of concentration made during a calendar month. Daily determinations of concentration made using a composite sample shall be the concentration of the composite sample. When grab samples are used, the daily determination of concentration shall be the arithmetic average (weighted by flow) of all the samples collected during that calendar day.

   b. The "daily maximum" concentration means the daily determination of concentration for any calendar day.

   c. "Weighted by flow" means the summation of each sample concentration times its respective flow in convenient units divided by the summation of the flow values.

   d. "Nekton" means free swimming aquatic animals whether of freshwater or marine origin.

   e. For the purpose of this permit, a calendar day is defined as any continuous 24-hour period.

* Continuation of present reporting frequency

f. The "daily average" discharge means the total discharge by weight during a calendar month divided by the number of days in the month that the production or commercial facility was operating. Where less than daily sampling is required by this permit, the daily average discharge shall be determined by the summation of all the measured daily discharges by weight divided by the number of days during the calendar month when the measurements were made.

g. The "daily maximum" discharge means the total discharge by weight during any calendar day.

4. *Test Procedures*

Test procedures for the analysis of pollutants shall conform to regulations published pursuant to Section 304(g) of the Act, under which such procedures may be required.

5. *Recording of Results*

For each measurement or sample taken pursuant to the requirements of this permit, the permittee shall record the following information:

a. The exact place, date, and time of sampling;

b. The dates the analyses were performed;

c. The person(s) who performed the analyses;

d. The analytical techniques or methods used; and

e. The results of all required analyses.

6. *Additional Monitoring by Permittee*

If the permittee monitors any pollutant at the location(s) designated herein more frequently than required by this permit, using approved analytical methods as specified above, the results of such monitoring shall be included in the calculation and reporting of the values required in the Discharge Monitoring Report Form (EPA No. 3320-1). Such increased frequency shall also be indicated.

7. *Records Retention*

All records and information resulting from the monitoring activities required by this permit including all records of analyses performed and calibration and maintenance of instrumentation and recordings from continuous monitoring instrumentation shall be retained for a minimum of three (3) years, or longer if requested by the Regional Administrator or the State water pollution control agency.

A. MANAGEMENT REQUIREMENTS

1. *Change in Discharge*

All discharges authorized herein shall be consistent with the terms and conditions of this permit. The discharge of any pollutant identified in this permit more frequently than or at a level in excess of that authorized shall constitute a violation of the permit. Any anticipated facility expansions, production increases, or process modifications which will result in new, different, or increased discharges of pollutants must be reported by submission of a new NPDES application or, if such changes will not violate the effluent limitations specified in this permit, by notice to the permit issuing authority of such changes. Following such notice, the permit may be modified to specify and limit any pollutants not previously limited.

2. *Noncompliance Notification*

If, for any reason, the permittee does not comply with or will be unable to comply with any daily maximum effluent limitation specified in this permit, the permittee shall provide the Regional Administrator and the State with the following information, in writing, within five (5) days of becoming aware of such condition:

a. A description of the discharge and cause of noncompliance, and

b. The period of noncompliance, including exact dates and times; or, if not corrected, the anticipated time the noncompliance is expected to continue, and steps being taken to reduce, eliminate and prevent recurrence of the noncomplying discharge.

3. *Facilities Operation*

The permittee shall at all times maintain in good working order and operate as efficiently as possible all treatment or control facilities or systems installed or used by the permittee to achieve compliance with the terms and conditions of this permit.

4. *Adverse Impact*

The permittee shall take all reasonable steps to minimize any adverse impact to navigable waters resulting from noncompliance with any effluent limitations specified in this permit, including such accelerated or additional monitoring as necessary to determine the nature and impact of the noncomplying discharge.

5. *Bypassing*

Any diversion from or bypass of facilities necessary to maintain compliance with the terms and conditions of this permit is prohibited, except (i) where unavoidable to prevent loss of life or severe property damage, or (ii) where excessive storm drainage or runoff would damage any facilities necessary for compliance with the effluent limitations and prohibitions of this permit. The permittee shall promptly notify the Regional Administrator and the State in writing of each such diversion or bypass.

6. *Removed Substances*

Solids, sludges, filter back wash, or other pollutants removed in the course of treatment or control of wastewaters shall be disposed of in a manner such as to prevent any pollutant from such materials from entering navigable waters.

7. *Power Failures*

In order to maintain compliance with the effluent limitations and prohibitions of this permit, the permittee shall either:

a. In accordance with the Schedule of Compliance contained in Part I, provide an alternative power source sufficient to operate the wastewater control facilities;

or, if such alternative power source is not in existence, and no date for its implementation appears in Part I,

b. Halt, reduce or otherwise control production and/or all discharges upon the reduction, loss, or failure of the primary source of power to the wastewater control facilities.

B. RESPONSIBILITIES

1. *Right of Entry*

The permittee shall allow the Regional Administrator, and/or his authorized representatives, upon the presentation of credentials:

a. To enter upon the permittee's premises where an effluent source is located or in which any records are required to be kept under the terms and conditions of this permit; and

b. At reasonable times to have access to and copy any records required to be kept under the terms and conditions of this permit; to inspect any monitoring equipment or monitoring method required in this permit; and to sample any discharge of pollutants.

2. *Transfer of Ownership or Control*

In the event of any change in control or ownership of facilities from which the authorized discharges emanate, the permittee shall notify the succeeding owner or controller of the existence of this permit by letter, a copy of which shall be forwarded to the Regional Administrator and the State water pollution control agency.

3. *Availability of Reports*

Except for data determined to be confidential under Section 308 of the Act, all reports prepared in accordance with the terms of this permit shall be available for public

inspection at the offices of the State water pollution control agency and the Regional Administrator. As required by the Act, effluent data shall not be considered confidential. Knowingly making any false statement on any such report may result in the imposition of criminal penalties as provided for in Section 309 of the Act.

4. *Permit Modification*

After notice and opportunity for a hearing, this permit may be modified, suspended, or revoked in whole or in part during its term for cause including, but not limited to, the following:

a. Violation of any terms or conditions of this permit;

b. Obtaining this permit by misrepresentation or failure to disclose fully all relevant facts; or

c. A change in any condition that requires either a temporary or permanent reduction or elimination of the authorized discharge.

5. *Toxic Pollutants*

Notwithstanding Part II, B-4 above, if a toxic effluent standard or prohibition (including any schedule of compliance specified in such effluent standard or prohibition) is established under Section 307(a) of the Act for a toxic pollutant which is present in the discharge and such standard or prohibition is more stringent than any limitation for such pollutant in this permit, this permit shall be revised or modified in accordance with the toxic effluent standard or prohibition and the permittee so notified.

6. *Civil and Criminal Liability*

Except as provided in permit conditions on "Bypassing" (Part II, A-5) and "Power Failure" (Part II, A-7), nothing in this permit shall be construed to relieve the permittee from civil or criminal penalties for noncompliance.

7. *Oil and Hazardous Substance Liability*

Nothing in this permit shall be construed to preclude the institution of any legal action or relieve the permittee from any responsibilities, liabilities, or penalties to which the permittee is or may be subject under Section 311 of the Act.

8. *State Law*

Nothing in this permit shall be construed to preclude the institution of any legal action or relieve the permittee from any responsibilities, liabilities, or penalties established pursuant to any applicable State law or regulation under authority preserved by Section 510 of the Act.

9. **Property Rights**

The issuance of this permit does not convey any property rights in either real or personal property, or any exclusive privileges, nor does it authorize any injury to private property or any invasion of personal rights, nor any infringement of Federal, State or local laws or regulations.

10. **Severability**

The provisions of this permit are severable, and if any provision of this permit, or the application of any provision of this permit to any circumstance, is held invalid, the application of such provision to other circumstances, and the remainder of this permit, shall not be affected hereby.

PART III

OTHER REQUIREMENTS

A. There shall be no discharge of metal cleaning wastes (except as noted for Serial 004) as defined in 40 CFR Part 432.11(j) to any plant waste stream which discharges to Waters of the United States.

B. If the permittee, after monitoring for at least 12 months, determines that he is consistently meeting the effluent limits contained herein, the permittee may request of the Director, Enforcement Division that the monitoring requirements be reduced to a lesser frequency or be eliminated.

C. There shall be no discharge of polychlorinated biphenyl compounds such as those commonly used for transformer fluid. In the event that PCB containing equipment is used on site, administrative procedures shall be instituted to (1) maintain a detailed inventory of PCB use, (2) assure engineering design and construction to preclude release of PCB's to the environment, and (3) effectively detect the loss of PCB's from equipment. Detail of such procedures shall be submitted by January 31, 1979.

D. The company shall notify the Director, Enforcement Division is writing not later than sixty (60) days prior to instituting use of any additional biocide or chemical used in cooling systems, other than chlorine, which may be toxic to aquatic life other than those previously reported to the Environmental Protection Agency. Such notification shall include:

1. name and general composition of biocide or chemical,
2. 96-hour median tolerance limit data for organisms representative of the biota of the waterway into which the discharge shall occur,
3. quantities to be used,
4. frequencies of use,
5. proposed discharge concentrations, and
6. EPA registration number, if applicable.

E. Concrete washing wastes shall be directed to the construction yard drainage pond (Serial Number 001).

F. Intake screen backwash and strainer backwash shall be discharged to the holding pond unless results of operational aquatic monitoring program indicate the need for rerouting. Material removed from the bar racks shall not be returned to the Tennessee River.

G. Effluent diffuser shall be designed to assure a minimum dilution factor of 10 at all river flow conditions. Subsequent to commercial operation of Unit 2 field measurements (supplemented as necessary with modeling results) shall be conducted to determine three dimensional configuration of the thermal plumes, substantiate the dispersion modeling, and assure conformance with the assigned thermal mixing zone. The report on thermal plume and dispersion characteristics shall be submitted not later than 15 months after commercial operation date of Unit 2.

H. There shall be no discharge through the plant diffuser system when Tennessee River flows are less than 3500 cubic feet per second. Positive interlocks with the Watts Bar Hydroelectric Plant shall be provided to assure compliance with this requirement.

I. Discharge of blowdown from the cooling tower system shall be limited to the minimum discharge practicable, consistant with requirements of the once through raw cooling water systems.

J. Permittee shall continue and complete the pre-operational non-radiological aquatic monitoring program submitted to EPA on August 31, 1977. A report on this study shall be submitted not later than January 31, 1980.

K. By the commercial operation date of Unit 1, permittee shall implement the non-radiological aquatic monitoring program submitted to EPA on August 31, 1977. Specific details of this program shall be finalized and submitted for review and approval by the Director, Enforcement Division not later than September 30, 1979. Reports shall be submitted annually, not more than three months following completion of the reporting period with the first report due 15 months after implementation of the program. The program shall continue for a period of not less than one year after commercial operation of Unit 2.

L. Permittee shall comply with applicable requirements of 40 CFR Part 112, OIL POLLUTION PREVENTION.

M. The permittee shall provide a technical study that correlates operations experience with condenser tubes from Units 1 and 2 and demonstrates a sufficiently low corrosion/erosion rate to assure protection of aquatic organisms. A study plan shall be submitted not later than one year prior to commercial operation date of Unit 1. Report period will be developed upon submission of the study plan.

N. Copies of all routine liquid effluent and water quality monitoring reports submitted to NRC shall be submitted to EPA and the State Director.

O. Copies of all plans, and reports submitted in accordance with Parts III. C, D, G, J, K, and N herein shall be forwarded by the permittee as follows:

Number of Copies	Addressee
4	Director, Enforcement Division, EPA (Atlanta)
1	Chief, Ecology Branch, EPA (Athens)
2	Director for Environmental Projects, NRC (Bethesda)
2	Regional Director, Fish and Wildlife Service (Atlanta)
1	Director, Tennessee Division of Water Quality Control (Nashville)
1	Regional Engineer, Tennessee Division of Water Quality Control (Chattanooga)

P. This permit shall be modified, or alternatively, revoked and reissued, to comply with any applicable effluent standard or limitations issued or approved under sections 301(b)(2) (C), and (D), 304(b)(2), and 307(a)(2) of the Clean Water Act, if the effluent standard or limitation so issued or approved:

(1) Contains different conditions or is otherwise more stringent than any effluent limitation in the permit; or
(2) Controls any pollutant not limited in the permit.

The permit as modified or reissued under this paragraph shall also contain any other requirements of the Act then applicable.

Q. The Tennessee Department of Public Health has certified the discharges covered by this permit with conditions (See Attachment "C"). Section 401 of the Act requires that conditions of certification shall become a condition of the permit. The monitoring and sampling shall be as indicated for those parameters included in the certification. Any effluent limits, and any additional requirements, specified in the attached state certification which are more stringent supersede any less stringent effluent limits provided herein. During any time period in which the more stringent state certification effluent limits are stayed or inoperable, the effluent limits provided herein shall be in effect and fully enforceable.

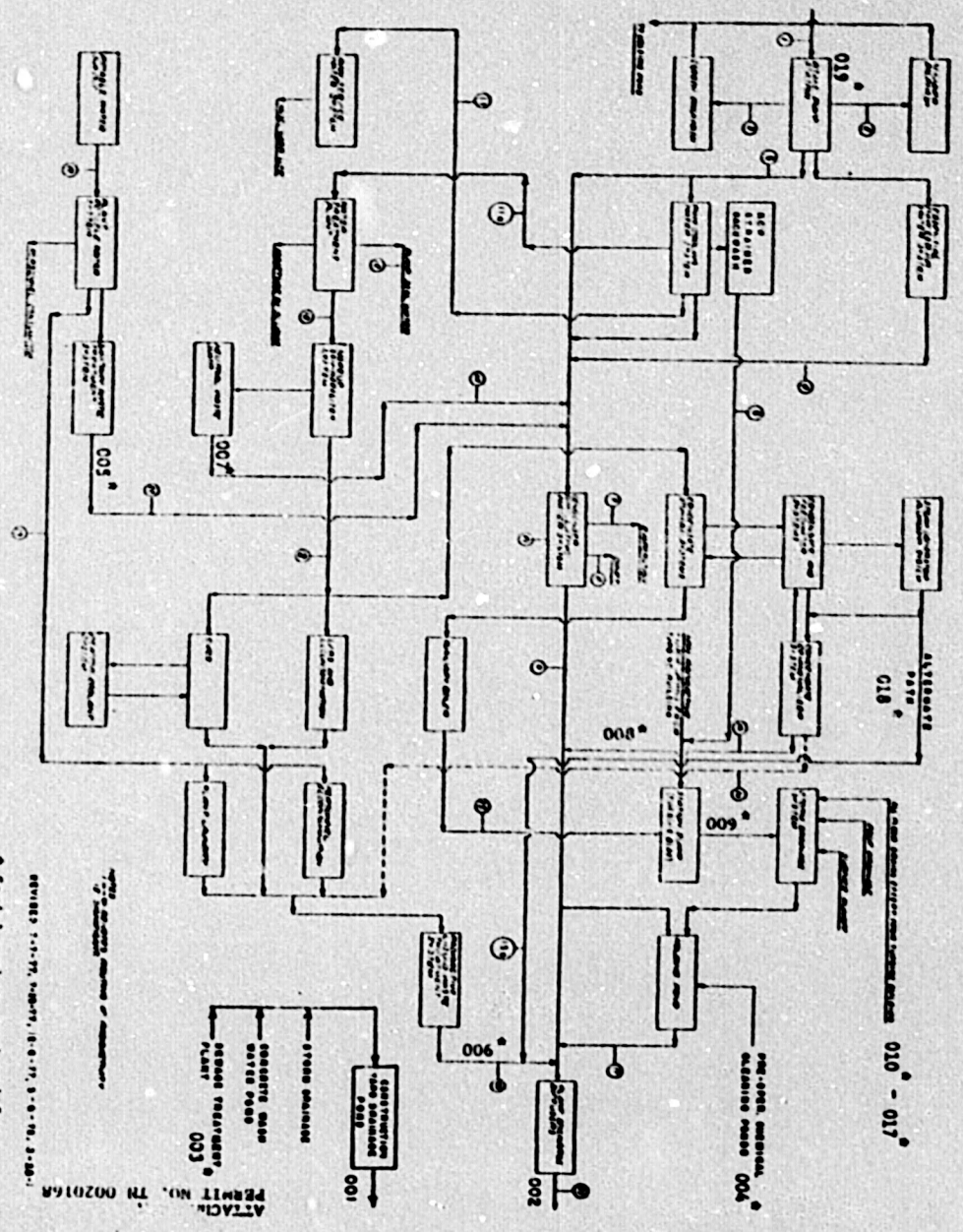

* Serial numbers assigned for identification and monitoring

ATTACHMENT C
Permit No. TN 0020168

STATE OF TENNESSEE
DEPARTMENT OF PUBLIC HEALTH
CORDELL HULL BUILDING
NASHVILLE, TENNESSEE 37219

621 Cordell Hull Building

October 13, 1978

Mr. Paul J. Traina
Director
Enforcement Division, Region IV
Environmental Protection Agency
345 Courtland Street
Atlanta, Georgia 30308

RE: State Certification
NPDES Permit No. TN0020168
Watts Bar Nuclear Plant, Units One and Two
Spring City, Rhea County, Tennessee
Receiving Waters - Tennessee River, Mile 527.8,
and Yellow Creek, Mile 1.3

Dear Mr. Traina:

Pursuant to Section 401 of the Federal Water Pollution Control Act (as amended by the Clean Water Act of 1977), 33 U.S.C. 1251, 1341, the State of Tennessee hereby issues certification to the subject applicant for a National Pollutant Discharge Elimination System (NPDES) Permit for a wastewater discharge.

The State of Tennessee is not aware of any condition or limitation under Section 301, Section 302, or Section 303 of the Federal Act that would be violated by issuance of the proposed NPDES Permit; additionally, the State of Tennessee is not aware of any standard of performance under Section 306 or Section 307 that would be violated by issuance of the proposed Permit.

This certification is contingent upon the following conditions:

1. Permittee is in no way relieved from any liability for damages which might result from the discharge of wastewater.

2. Permittee must additionally comply with all requirements, conditions, or limitations which may be imposed by any provision of the Tennessee Water Quality Control Act (T.C.A. Sections 70-324 through 70-342) or any regulations promulgated pursuant thereto.

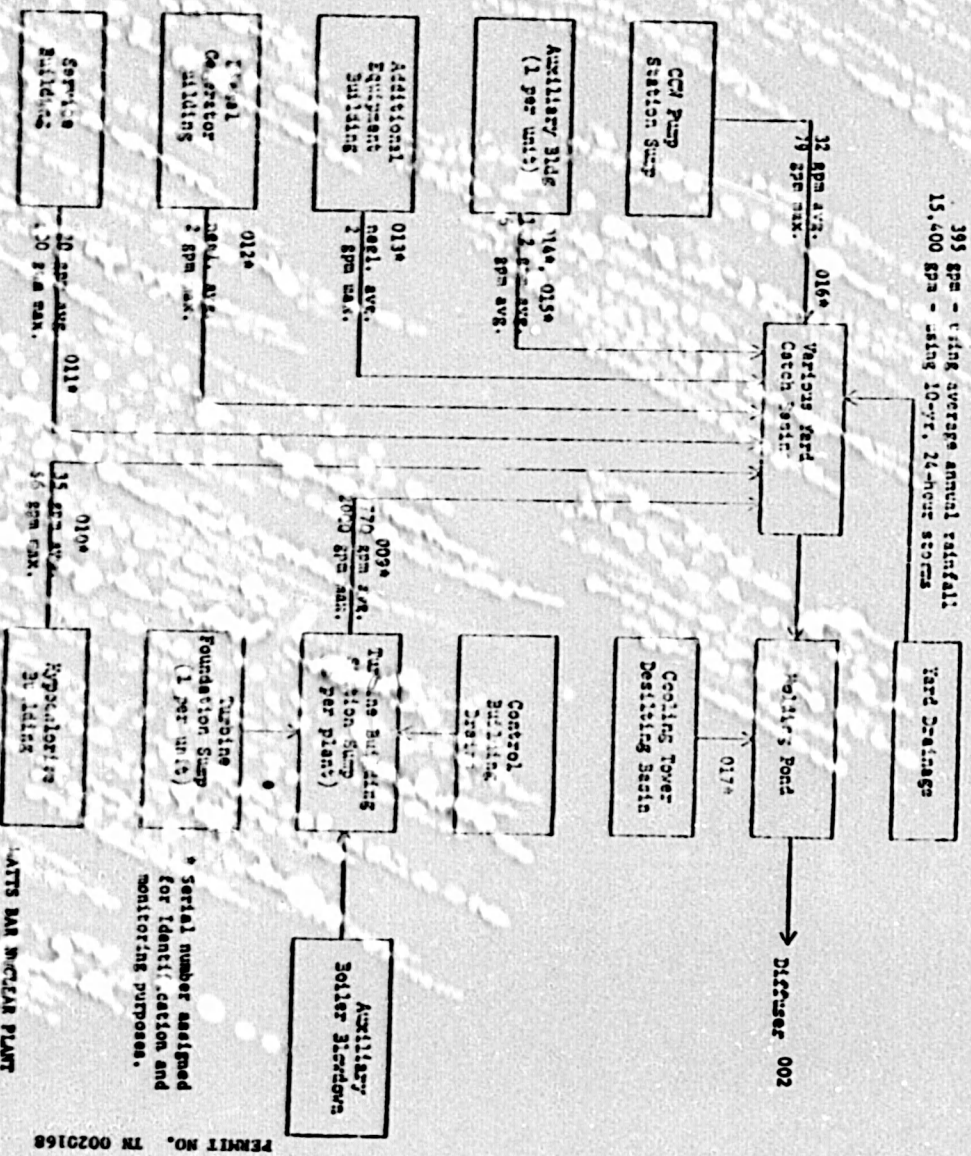

ATTACHMENT B
PERMIT NO. TN 0020168

3. The State of Tennessee reserves the right to modify or revoke this certification or to seek revocation or modification of the NPDES Permit issued subject to this certification should the State determine that the wastewater discharge violates the Tennessee Water Quality Control Act, or any applicable Water Quality Criteria, or any rules or regulations which may be promulgated pursuant to the Clean Water Act of 1977, Public Law 95-217.

4. The State requests that the following discharge limitations, criteria, and requirements be included in the NPDES Permit:

a. With regard to Serial Number 002, the State requests the following wording to govern direct overflows from the yard drainage holding pond to the Tennessee River:

"Direct overflow from the yard holding pond to the Tennessee River is allowed under emergency conditions to protect dike stability, but only to the minimum extent necessitated by the emergency. Notification of such overflow shall be provided to the Director, Enforcement Division, and to the State Director within five days after any occurrence. On each occurrence, a grab sample shall be collected for suspended solids analysis and the results of such analysis shall be reported either with the notification of overflow or within 15 days of the occurrence.

b. With regard to Serial Number 001, 002, 003, 004, 005, 006, 007, 008, 009, 010, 011, 012, 013, 014, 015, 016, 017, and 018, the State requests that the following statement be included to govern discharge floating materials:

"The wastewater discharge must contain no distinctly visible floating scum, oil sheen, or other floating matter."

c. With regard to Serial Number 003, the State requests that the discharge limitations and monitoring requirements set out in Attachment A to this certification be included in the NPDES Permit.

d. With regard to Serial Number 004, the State requests that the following additional language be included to govern the possible disposal of this wastewater by means of land application or spray irrigation:

"Permittee must obtain approvals from the Tennessee Division of Water Quality Control and EPA prior to any land disposal or spray irrigation of these wastes. Said approvals shall be based upon site inspections and review of appropriate engineering submittals."

e. With regard to Serial Number 005, the State requests that the discharge limitations and monitoring requirements set out in Attachment B to this certification be included in the NPDES Permit.

f. With regard to Part I B.1.c., and Part III C., control of polychlorinated biphenyl materials, the State requests that the PCB Control Report be submitted no later than thirty (30) days from the effective date of the NPDES Permit.

g. With regard to all wastewater discharges from the facility, the effluent quality as relates to radioactive constituents shall meet the requirements specified in the operational technical specifications issued by the U.S. Nuclear Regulatory Commission for this facility under 10 CFR 20.

5. With regard to the various studies and reports required of the applicant pursuant to Part I B. of NPDES Permit, the State reserves the right to modify or revoke the certification or to seek revocation or modification of the NPDES Permit issued subject to the certification as may be required to protect water quality based upon the results of these studies and reports.

Very truly yours,

D. Elmo Lunn / by ngw

D. Elmo Lunn
Director
Division of Water Quality Control

DEL/ljc 5/6

cc: Dr. Harry Moore, Tennessee Valley Authority
Mr. Jack McCormick, Division of Water Quality Control
Rhea County Health Department
Southeast Regional Health Office

Attachment B
Serial Number 005

Effluent Characteristic	Discharge Limitations						Monitoring Requirements	
	Daily Average		Weekly Average		Daily Maximum			
	mg/l	kg/day (lbs/day)	mg/l	kg/day (lbs/day)	mg/l	kg/day (lbs/day)	Measurement Frequency	Sample Type
Flow-M^3/day (MGD)				45 (0.012)			1/day	Instantaneous
BOD_5	30	1.4 (3.0)	40	1.8 (4.0)	45	2.0 (4.5)	1/2 weeks	Grab
Suspended Solids	30	1.4 (3.0)	40	1.8 (4.0)	45	2.0 (4.5)	1/2 weeks	Grab
Fecal Coliform (#/100 ml)				N/A			N/A	
Total Chlorine Residual				N/A			N/A	
Settleable Solids (ml/l)				N/A			N/A	
pH				N/A			N/A	
Dissolved Oxygen				N/A			N/A	

The wastewater discharge must contain no distinctly visible floating scum, oil sheen, or other floating matter.

Any sludge or other materials removed by any treatment works must receive disposal adequate to prevent their entrance into or pollution of any surface or subsurface waters.

Attachment A
Serial Number 003

Effluent Characteristic	Discharge Limitations						Monitoring Requirements	
	Daily Average		Weekly Average		Daily Maximum			
	mg/l	kg/day (lbs/day)	mg/l	kg/day (lbs/day)	mg/l	kg/day (lbs/day)	Measurement Frequency	Sample Type
Flow - M^3/day (MGD)				136 (0.036)			1/day	Instantaneous
BOD_5	30	4.1 (9.0)	40	5.4 (12)	45	6.8(14)	1/2 weeks	Grab
Suspended Solids	30	4.1 (9.0)	40	5.4 (12)	45	6.4 (14)	1/2 weeks	Grab
Fecal Coliform - (#/100ml)		See below					1/2 weeks	Grab
Total Chlorine Residual		See below					1/day	Grab
Settleable Solids (ml/ l)		See below					1/day	Grab
pH		See below					1/week	Grab
Dissolved Oxygen		See below					1/day	Grab

The pH of the wastewater discharge must, at no time, be less than 6.0 nor greater than 9.0.

The concentration of settleable solids in the wastewater discharge must, at no time, exceed 1.0 ml/l as measured by the standard one-hour Imhoff cone test.

The wastewater discharge must contain no distinctly visible floating scum, oil sheen, or other floating matter.

The wastewater discharge must be disinfected to the extent that viable coliform organisms are effectively eliminated. The concentration of the fecal coliform group shall not exceed 200 per 100 ml. as the geometric mean based on a minimum of 10 samples collected from a given sampling site over a period of not more than 30 consecutive days with individual samples being collected at intervals of not less than 12 hours. For the purpose of determining the geometic mean, individual samples having a fecal coliform group concentration of less than one per 100 ml shall be considered as having a concentration of one per 100 ml. In addition, the concentration of the fecal coliform group in any individual sample shall not exceed 1000 per 100 ml. The use of chlorine as a disinfecting agent must be controlled to the extent that the total chlorine residual does not exceed 2.0 mg/l.

The concentration of dissolved oxygen in the wastewater discharge must be greater than 1.0 mg/l.

Any sludge or other materials removed by any treatment works must receive disposal adequate to prevent their entrance into or pollution of any surface or subsurface waters.

DETERMINATION
UNITED STATES ENVIRONMENTAL PROTECTION AGENCY
REGION IV

IN THE MATTER OF	)	
	)	NPDES No. TN0020168
	)	
Tennessee Valley Authority	)	Findings under 33 U.S.C. 1326
Watts Bar Nuclear Plant	)	
Spring City, Tennessee	)	

Pursuant to Section 316(a) of the Federal Water Pollution Control Act, as amended, and 40 CFR Part 122, the Director, Enforcement Division cores now and makes the following findings relative to the Watts Bar Nuclear Plant (WBNP) of the Tennessee Valley Authority:

1. WBNP is a proposed two unit generating station with a total nameplate capacity of approximately 2540 megawatts, and is located adjacent to Chickamauga Lake at Tennessee River Mile 528.
2. The plant site is approximately two miles downstream from Watts Bar Dam and associated Hydroelectric Plant with a total nameplate capacity of 150 megawatts and 1-1/3 miles downstream from the coal-fired Watts Bar Steam Plant with a total nameplate capcity of 240 megawatts.
3. Average flow from the Dam has been approximately 750 cubic meters per second (26,500 cfs); however, periods of zero release of up to 12 hours can be expected, generally at night when the Steam Plant is at low loading.
4. Minimum flow during periods of operation of one of the five generators at the Hydroelectric Plant is 99 cubic meters per second (3500 cfs) and no releases from WBNP will occur unless at least one hydroelectric generator is in operation.
5. The Steam Plant is expected to increase the Tennessee River temperature a maximum of 1.7°C(3.0°F) at the upper edge of the proposed WBNP mixing zone even after periods of zero release from Watts Bar Dam.
6. The discharge temperature from WBNP is expected to be a maximum of 35.0°C(95.0°F).
7. The proposed WBNP mixing zone is 240 feet wide and extends 240 feet downstream from the diffuser and occupies a maximum of 31 to 38 percent of the cross-sectional area of the river as a function of water surface elevation.
8. The diffuser system for WBNP is designed to assure a minimum dilution factor of 10 at all river flow conditions above 99 cubic meters per second (3500 cfs).
9. The WBNP diffuser can assure compliance with the Tennessee Water Quality Standards maximum temperature criterion of 30.5°C(86.9°F) for all river temperatures of less than or equal to 30.0°C(86.0°F) at the upper edge of the proposed WBNP mixing zone. Diffuser design will assure conformance with the 3°C(5.4°F) maximum thermal rise criterion for all conditions.
10. The Steam Plant discharge will not increase the temperature at the edge of the proposed WBNP mixing zone above 30.0°C(86.0°F) if Watts Bar Hydroelectric Plant tailrace temperatures are less than or equal to 28.3°C(83.0°F).
11. Tailrace temperatures have exceeded 28.3°C(83.0°F) in eight of the 1320 weekly observation obtained between February 1950 and September 1977.
12. No tailrace temperature above 28.3°C(83.0°F) has occurred since August 30, 1955.

13. No more than three consecutive observations exceeded 28.3°C(83.0°F).

14. Occurrance of the maximum tailrace temperature observed, 30.5°C(86.9°F), could result in the following maximum temperatures at the downstream edge of the proposed WBNP mixing zone, if the Hydroelectric Plant had not been operated for 12 hours:

    a. 31.0°C(87.7°F) if only WBNP was operating at maximum discharge temperature;

    b. 32.2°C(89.9°F) if only the Steam Plant was operating at maximum expected conditions; and

    c. 32.4°C(90.4°F) if both plants were operating.

15. Continuous releases from the Hydroelectric Plant or no-flow periods of less than 12 hours could result in temperatures of 0.2°C(0.3°F) to 0.3°C(0.6°F) less than noted in Item 14 above.

16. The above temperatures, although exceeding the maximum criterion of the Tennessee Water Quality Standards, are not expected to adversely affect the aquatic life of Chicamauga Lake.

It is therefore concluded, based on the above-stated findings and the administrative record in this matter that discharges from the Watts Bar Nuclear Plant with a maximum instantaneous temperature of 35.0°C(95.0°F) and a mixing zone of dimensions 240-foot width and 240-foot downstream length will assure the protection and propagation of a balanced, indigenous population of shellfish, fish, and wildlife in and on Chickamauga Lake, even when upstream temperatures approach or exceed 30.5°C (86.9°F).

NOV 27 1978

Paul J. Traina
Director, Enforcement Division
Pursuant to Authority Delegated by
the Regional Administrator on
August 11, 1977

RAY BLANTON
GOVERNOR

ONO W. FOWKLE, M.D., M.P.H.
COMMISSIONER

STATE OF TENNESSEE
DEPARTMENT OF PUBLIC HEALTH
NASHVILLE 37210
621 Cordell Hull Bldg.

October 13, 1978

Mr. Paul J. Traina, Director
Enforcement Division, Region IV
Environmental Protection Agency
345 Courtland Street, N.E.
Atlanta, Georgia 30308

Re: NPDES Permit No. TN0020168
Watts Bar Nuclear Plant

Dear Mr. Traina:

The Tennessee Division of Water Quality Control hereby concurs with the Tennessee Valley Authority's proposed biomonitoring program for the Watts Bar Nuclear Plant. Please refer to Mr. Elmo Lunn's letter of October 13, 1978, for permit conditions certified by the State of Tennessee for the Watts Bar facility.

Sincerely,

Natalie Ransone

Natalie Ransone
Chief, Permits Section
Division of Water Quality Control

NGR/dar

CC: Jack McCormick, Water Quality Control
Harry G. Moore, TVA

RECEIVED
EPA/REGION IV
OCT 16 3 ... 78
ENFORCEMENT
DIVISION

NRC FORM 335 (7-77)

U.S. NUCLEAR REGULATORY COMMISSION

BIBLIOGRAPHIC DATA SHEET

1. REPORT NUMBER (Assigned by DDC): NUREG-0498

4. TITLE AND SUBTITLE (Add Volume No., if appropriate): Final Environmental Statement related to operation of Watts Bar Nuclear Plant, Units 1 and 2

2. (Leave blank)

3. RECIPIENT'S ACCESSION NO.

7. AUTHOR(S)

5. DATE REPORT COMPLETED: MONTH December, YEAR 1978

9. PERFORMING ORGANIZATION NAME AND MAILING ADDRESS (Include Zip Code)

U.S. Nuclear Regulatory Commission
Office of Nuclear Reactor Regulation
Washington, DC 20555

DATE REPORT ISSUED: MONTH, YEAR

6. (Leave blank)

8. (Leave blank)

12. SPONSORING ORGANIZATION NAME AND MAILING ADDRESS (Include Zip Code)

U.S. Nuclear Regulatory Commission
Office of Nuclear Reactor Regulation
Washington, DC 20555

10. PROJECT/TASK/WORK UNIT NO.

11. CONTRACT NO.

13. TYPE OF REPORT: Final Environmental Statement

PERIOD COVERED (Inclusive dates)

15. SUPPLEMENTARY NOTES: Pertains to Docket Nos. 50-390 and 50-391

14. (Leave blank)

16. ABSTRACT (200 words or less)

A Final Environmental Statement for the Tennessee Valley Authority for the operation of the Watts Bar Nuclear Plant, Units 1 and 2 (Docket Nos. 50-390 and 50-391) located in Rhea County, Tennessee, has been prepared by the Office of Nuclear Reactor Regulation of the Nuclear Regulatory Commission (NRC). This statement provides (1) a summary of environmental impact and adverse effects of the proposed facility, and (2) a consideration of principal alternatives. Also included are comments of governmental agencies and other organizations on the Draft Environmental Statement for the project and staff responses to these comments. The NRC staff has concluded, based on a weighing of environmental, economic, technical, and other benefits against environmental costs and available alternatives, that construction permits could be granted. The applicant will be required to take the necessary mitigating actions during operation of the plant and associated transmission lines to avoid unnecessary environmental impacts. In addition, the staff requires a limited term bird monitoring program to detect episodes of serious bird collisions with the cooling towers, and annual reporting of chemical control of vegetation and transmission line rights-of-way.

17. KEY WORDS AND DOCUMENT ANALYSIS

17a. DESCRIPTORS

17b. IDENTIFIERS/OPEN-ENDED TERMS

18. AVAILABILITY STATEMENT: Available at NTIS

19. SECURITY CLASS (This report): Unclassified

20. SECURITY CLASS (This page): Unclassified

21. NO. OF PAGES

22. PRICE: $

NRC FORM 335 (7-77)