References for Section 11

[1]Plan for Reevaluation of NRC Policy on Decommissioning of Nuclear Facilities, NUREG-0436, March 1978.

[2]Technology, Safety and Costs of Decommissioning a Reference Nuclear Fuel Reprocessing Plant, NUREG-0278, October 1977.

[3]Technology, Safety and Cost of Decommissioning a Reference Pressurized Water Reactor Power Station, NUREG-CR-0130, June 1978.

APPENDIX A

COMMENTS ON

DRAFT ENVIRONMENTAL STATEMENT

CONTENTS

U. S. Department of Agriculture, Economics, Statistics and Cooperative Service A-2

Federal Energy Regulatory Commission A-2

Ms. Zelia M. Jensen A-3

U. S. Department of Commerce A-3

U. S. Department of Agriculture, Soil Conservation Service A-4

U. S. Department of the Interior A-5

Mr. Marvin L. Lewis A-6

Chattanooga Area Council of Governments A-6

Tennessee State Planning Office A-8

Mr. and Mrs. Arthur Jensen A-9

Tennessee Valley Authority A-10

U. S. Environmental Protection Agency A-22

Tennessee State Planning Office A-23

Tennessee Valley Authority A-25

Mr. Albert Bates, PLENTY. A-25

Dr. Louis G. Williams A-29

50-590
391

U.S. DEPARTMENT OF AGRICULTURE
ECONOMICS, STATISTICS, and COOPERATIVES SERVICE
WASHINGTON, D.C. 20250

June 14, 1978

SUBJECT: Draft Environmental Statement

TO: William H. Regan, Jr., Chief
Environmental Projects Branch 2
Division of Site Safety and
Environmental Analysis

We have no comments on the Draft Environmental Statement related to operation of Watts Bar Nuclear Plant, Units 1 and 2.

Melvin L. Cotner

MELVIN L. COTNER
Director
Natural Resource Economics Division

731670045

Coo2
ES/10

FEDERAL ENERGY REGULATORY COMMISSION
WASHINGTON, D.C. 20426

50-590
391

June 29, 1978

Mr. William Regan, Jr.
Chief
Environmental Projects Branch
Division of Site Safety and
Environmental Analysis
Nuclear Regulatory Commission
Washington, D. C. 20555

Dear Mr. Regan:

I am replying to your request of June 2, 1978 to the Federal Energy Regulatory Commission for comments on the Draft Environmental Impact Statement for the Watts Bar Nuclear Plant Units 1 and 2. This Draft EIS has been reviewed by appropriate FERC staff components upon whose evaluation this response is based. We have no comments on this EIS.

Thank you for the opportunity to review this statement.

Sincerely,

J. M. Heinemann

Jack M. Heinemann
Advisor on Environmental Quality

781280106

Coo2
ES/10

[illegible]

U.S. Nuclear Regulatory Commission

Washington, D.C. 20555

Attention: Director, Division of Site, Safety and Environmental Analysis

In the Draft Environmental Statement for Watts Bar Nuclear plant, Unit 1 and 2 Tennessee Valley Authority, page 1, Summary and conclusions No.3 (b) states "The 907 acres of rural, partially wooded land owned by the applicant will be unavailable for other uses during the 40 year life of the plant".

Will you please explain what unavailable for other uses means? This is one of the many questions people are now asking in the Watts Bar vicinity. This is our reason for asking for a public hearing for the concerned citizens.

Thank you for your time and patience. The green book is very interesting.

Sincerely,

[illegible]

Delia [illegible] Jensen [illegible]

Route 1

Grandview, Tn. [illegible]

[illegible]

A-2

[illegible] OF COMMERCE

[illegible]

[illegible] 4125

July 10, 1978

50-390/391

Director, Division of Site
Safety and Environmental Analysis
U.S. Nuclear Regulatory Commission
Washington, D.C. 20555

Dear Sir:

This is in reference to your draft environmental impact statement entitled, "Watts Bar Nuclear Plant, Units 1 and 2, Tennessee Valley Authority, Rhea County, Tennessee." The enclosed comment from the National Oceanic and Atmospheric Administration is forwarded for your consideration.

Thank you for giving us the opportunity to provide this comment, which we hope will be of assistance to you. We would appreciate receiving ten (10) copies of the final statement.

Sincerely,

Sidney R. Galler
Deputy Assistant Secretary
for Environmental Affairs

Enclosure memo from: Mr. Douglas M. LeComte
Special Projects
NOAA

[illegible]

Cuo2 ES 1/1

July 3, 1978

TO: William Aron, Director
Office of Ecology and Environmental Conservation

FROM: Douglas M. Le Comte
Special Projects

SUBJECT: EDS Review of DEIS 7806.02 - Watts Bar Nuclear Plant, Units 1 and 2 Tennessee Valley Authority, TN

Page 2-11, Section 2.4.2: The text states that wind speeds at the 10-meter level averaged only 1.5 meters per second. If the wind measuring equipment is properly exposed, this is an improbably low wind speed. The data should be checked to determine if this is accurate. Additionally, the data summary presented in Figure 2.1 should have a caption which explains the data shown.

675 U. S. Courthouse, Nashville, Tennessee 37203

July 11, 1978

Mr. William H. Regan, Jr., Chief
Environmental Projects Branch 2
Division of Site Safety and
Environmental Analysis
U. S. Nuclear Regulatory Commission
Washington, D. C. 20555

Dear Mr. Regan:

The Draft Environmental Impact Statement - Watts Bar Nuclear Plant, Units 1 and 2, TVA - was referred to the Soil Conservation Service for review and comments on June 2, 1978.

We have reviewed the draft statement and offer the following comment for your consideration:

1. We see no deficiencies relating to our areas of responsibility except for lack of treatment of prime farmland loss.

We appreciate the opportunity to review this draft environmental impact statement.

Sincerely,

Donald C. Bivens
State Conservationist

cc: R. M. Davis
Director, Office of Federal Activities, Environmental Protection Agency

United States Department of the Interior

OFFICE OF THE SECRETARY
WASHINGTON, D.C. 20240

50-390/391

PEP ER-78/500

Mr. William H. Regan, Jr., Chief
Environmental Projects Branch
Division of Site Safety and
Environmental Analysis
Nuclear Regulatory Commission
Washington, D. C. 20555

Dear Mr. Regan:

Thank you for your letter of June 2, 1978, transmitting copies of the Nuclear Regulatory Commission's draft environmental statement for the operation of Watts Bar Nuclear Plant, Units 1 and 2, Rhea County, Tennessee. Our comments are arranged by subject.

Hydrology
Section 5.3.7 states that the radius of influence of the supply wells has been calculated to be 400 feet on the basis of discharging-well tests. The final statement should specify the well discharge rate corresponding to the given radius of influence. The final statement should also specify the elapsed time, that is, whether the radius of influence is calculated as 400 feet for the life of the project or for a short term.

The hydraulic characteristics of the aquifer used in the computations should be given and the aquifer(s) tapped by the preoperational and operational monitoring, listed on pages 6-1 and 6-6, should be identified.

Mineral Resources
The proposed project will have no adverse effects on mineral resources and may benefit mineral resources by providing electrical power for potential mineral development within the Tennessee Valley Authority service area.

We hope these comments will be helpful to you in the preparation of a final environmental statement.

Sincerely,

Heather L. Ross

Deputy Assistant SECRETARY

781990325

A-5

[illegible]

Mr. Oliver D. [illegible]
Director Div. of Site Safety & Env. Analysis
Office of Nuclear Reactor Regulation
U.S. N.R.C.
Wash., D.C. 20555

S.2 Please accept my comments below on the "DES of the Watts Bar Nuclear Plant, Units 1 & 2 TVA"

¶2.6 Background Radiological Characteristics. This is a very short ¶ on an immensely "important" subject. Clearly, some elaboration of health effects from background is needed.

¶3.2.1 Constant switching from one set of units to several others makes difficult reading. Use one set of units, gallons per day, and give the conversion factors.

P3-18 Gaseous Waste Summary. How does this summary compare to similar plant presently in operation? Please compare Millstone and Turkey Point with Watts.

P3-21 How sensitive is this analysis of $1000 mmhe rem. if the direction of major winds or unplanned spills occur, what happens to this analysis?

P5-17 Interesting.

P5-21 Table 5-10. This is the interim S-3 rule. It is presently in hearings and may be eliminated or changed practically. How will change of S-3 effect this DES?

P5-23 These numbers do not seem to agree with the Norton Ranch DES or Chauncy Kepford's deposition on Jun 8, 78 in the Perkins Nuke case at NRC, Bethesda, MD. Pls recheck Ra numbers and its agreement with Kepford's deposition.

I cannot go into all the questionable areas in this DES. Pls do not think I agree with areas on which I am not commenting.

Very truly yours,

Marvin I. Lewis

PS [illegible]

[illegible]

NACOG SETDD

ATTANOOGA AREA REGIONAL COUNCIL OF GOVERNMENTS
MES M. CANTRELL
airman

SOUTHEAST TENNESSEE DEVELOPMENT DISTRICT
C. L. THRAILKILL
Executive Director

July 17, 1978

Wm. H. Regan, Jr., Chief
Environmental Projects Branch 2
Division of Site Safety and
Environmental Analysis
U. S. Nuclear Regulatory Commission
Washington, D. C. 20555

SUBJECT: Docket Nos. 60-390 and 50-391 - Tennessee Valley Authority, Draft Environmental Statement for Watts Bar Nuclear Plant, Unit Nos. 1 and 2

Dear Mr. Regan:

In accordance with the Office of Management and Budget Circular A-95 this office, as the areawide clearinghouse, has reviewed the subject proposal.

Our review of the draft environment impact statement indicates that most initial review comments which this office raised have been satisfactorily answered. The notable exception is the issue of cumulative impacts from the series of nuclear plants in various stages of development along the Tennessee River. The enclosed map provides an overview of possible areas of cumulative impacts based on the 50 mile radius utilized throughout the impact statement. The primary cumulative impacts addressed were those of radiological impact. Other cumulative impacts and the relations of cumulative potentials were not adequately addressed or taken into consideration in analysis of various factors.

As an example of this oversite page 7-1 deals with Realistic Accident Analysis for the Watts Bar facility. Section 7.2 on this page states that "the probability of occurance of accidents and the spectrum of their consequences to be considered from an environmental effect standpoint have been analyzed using best estimates of probabilities and realistic fission product release and transport assumptions". We are satisfied that in this example the estimates and assumptions of probabilities for accidents and consequences concerning the Watts Bar facilities are acceptable. We question if the assumptions and estimates of probabilities are reliable with respect to the impact area when one considers the cumulative fact that there are several nuclear plants in the same general vacinity. In essence the sum of the cumulative potential is likely to be greater than the individual potentials, estimates, probabilities, and impacts. This example we have cited is not unique but merely representative of the basic short coming of the EIS in not properly addressing cumulative impacts.

C002 ES/C

C002 ES/1

Should there be any question, or if we may be of further assistance, please contact this office.

Sincerely,

Charles L. Thrailkill
Executive Director

CLT:HCB:cud

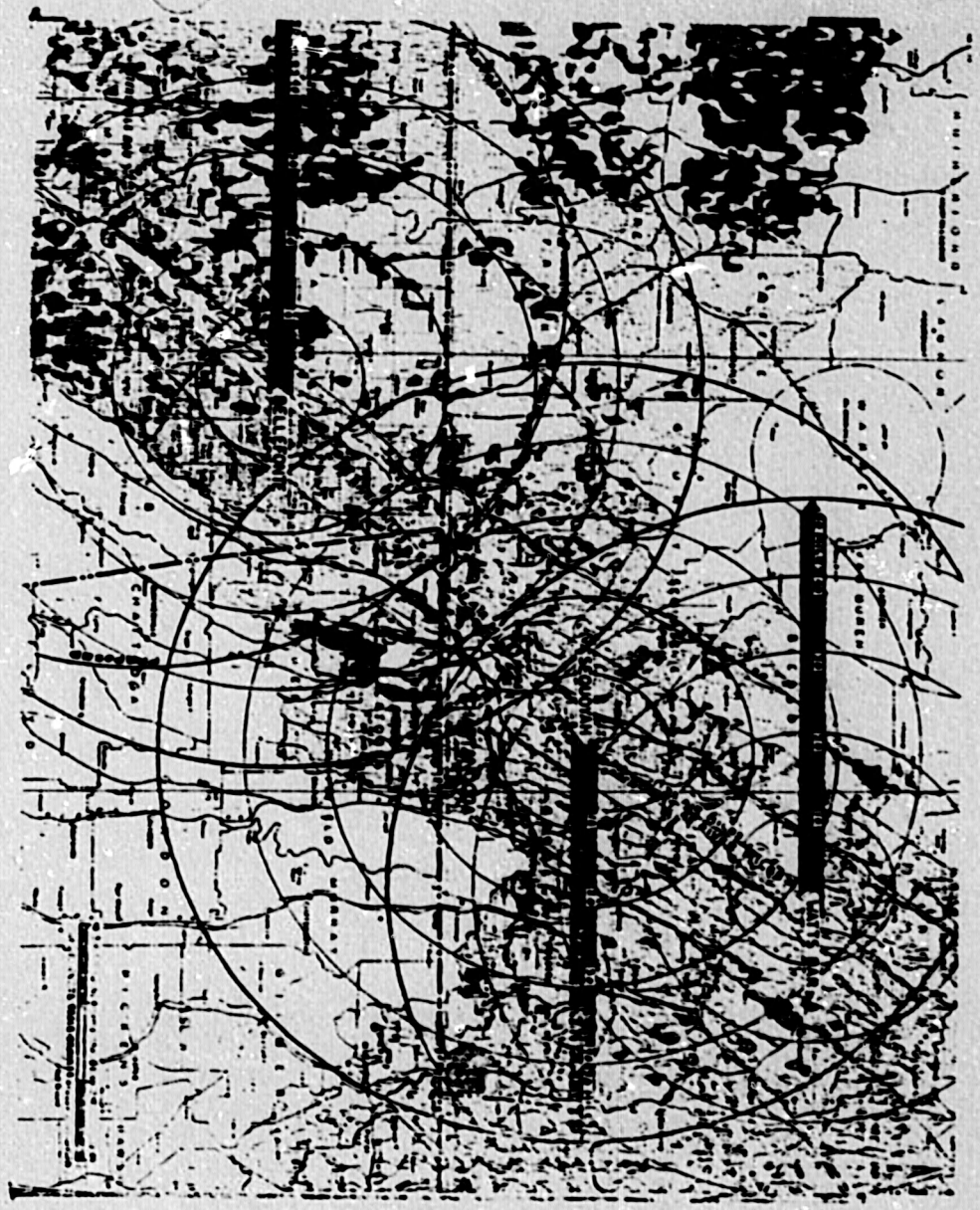

TENNESSEE
STATE PLANNING OFFICE

[illegible]

[illegible]

[illegible] CAPITOL HILL BUILDING
[illegible] NORTH
NASHVILLE, TENNESSEE 37219
[illegible]

50-390
391

July 19, 1978

Mr. William H. Regan, Jr., Chief
Environmental Projects Branch 2
Division of Site Safety and Environmental
Analysis
Nuclear Regulatory Commission
Washington D.C. 20555

RE: DEIS - Watts Bar Nuclear Plant, Units 1 and 2, TVA

Dear Mr. Regan:

The Tennessee State Clearinghouse has coordinated an agency review of the above referenced Draft EIS. I am submitting the enclosed comments from the Tennessee Wildlife Resources Agency and the Historical Commission for your consideration. If we receive additional comments from other agencies, I will forward them to you upon receipt.

Sincerely,

Bette A. Osborne

Bette A. Osborne
Natural Resource Staff

BAO/fe

Enclosure

TENNESSEE WILDLIFE RESOURCES AGENCY

[illegible] CENTER
P.O. BOX 40747
NASHVILLE, TENNESSEE 37204

[illegible]

July 11, 1978

Ms. Bette Osborne
Natural Resource Staff
State Planning Office
660 Capitol Hill Building
Nashville, Tennessee 37219

Dear Bette:

Re: DEIS - Watts Bar Nuclear Plant, Units 1 and 2 TVA

We have completed our review of the referenced document and offer the following comments:

Page 5-5, under 5.4.1 Terrestrial Environment The Station - Part of the last paragraph is missing.

Page 5-8, 5.4.2 Aquatic Environment, paragraph four - This infers that the sauger is not a significant species in the Watts Bar Tailr ce. Creel census data for Chickamauga Reservoir, which includes the Watts Bar tailwater, indicates that a significant sauger fishery exists. In the 1976-1977 creel an estimated 15,758 sauger averaging .75 lbs. were taken. This comprised 8.4% of the fishing pressure on Chickamauga.

Page C-19 Fish Production - Ichthyoplankton - This section draws the conclusion that the Watts Bar Tailwater is not a favorable spawning area for migratory spawners. This conclusion is based on a series of ichthyoplankton samples taken between March 29, and September 9, 1976. Since many factors may influence fish spawning in a given year, we do not agree with these findings.

Thank you for this opportunity for comment.

Sincerely,

TENNESSEE WILDLIFE RESOURCES AGENCY

James F. Sharber, Jr.

James F. Sharber, Jr.,
Environmental Planner

JFS:ss

cc: Mr. Reid Tatum
Mr. [illegible]

C007
ES1

TENNESSEE HISTORICAL COMMISSION

July 10, 1978

Ms. Bette Osborne
State Planning Office
660 Capitol Hill Bldg.
Nashville, Tennessee 37219

Re: DES (Operations) Watts Bar Nuclear Plant, TVA

Dear Bette:

The State Historic Preservation Officer and his staff have reviewed the above document and find that due to the nature of the undertaking, the operation of Watts Bar Nuclear Plan will not affect any historical or archaeological properties. Consequently it will not affect the plans or priorities of this agency.

Sincerely,

Herbert L. Harper

HLH:ll

Route 1
Brandview, Tn 37317
July 21, 1978

Mrs. Suzanne Neblusek
Environmental Project Manager
Office of Nuclear Reactor Regulation
U.S. Nuclear Regulatory Commission
Washington, D.C. 20555

Dear Mrs. Neblusek

Thank you for accepting our additional comments.

Specifically, in the Draft Environmental Statement relating to operation of Watts Bar Nuclear Plant Docket Nos. 50 - 390 and 50 - 391 page one, summary and conclusions, 3 (b)

a. Please define "unavailable for other uses during 40 year life of the plant."

b. how will the fish survive in the warm water of Chickamauga Reservoir and Tennessee River and be kept free of contamination ?

c. Where is the burial off-site for the radioactive solid waste ?

d. Is the general population living within 2 miles radius of the Nuclear Plant aware of the "radioactive effluents released to the hydrosphere from the Watts Bar facility during normal operation" ?

Dr. Thomas Mancuso states that so-called "safe standards" should be reduced ten fold. Does the Nuclear Regulatory Commission agree with this statement ?

Sincerely yours
Zelma Jensen
Arthur Jensen
Mr. & Mrs. Arthur Jensen

7821200003

TENNESSEE VALLEY AUTHORITY
CHATTANOOGA, TENNESSEE 37401
830 Power Building

July 31, 1978

Mr. Daniel Muller, Acting Director
Division of Site Safety and
Environmental Analysis
U.S. Nuclear Regulatory Commission
Washington, DC 20555

Dear Mr. Muller:

In the Matter of the Application of) Docket Nos. 50-390
Tennessee Valley Authority) 50-391

In accordance with the provisions for review and comment indicated in the Federal Register on June 9, 1978, the Tennessee Valley Authority (TVA) has reviewed the Nuclear Regulatory Commission's (NRC) Draft Environmental Impact Statement (EIS) for the TVA Watts Bar Nuclear Plant and we have the following general comments.

Water quality and effluent monitoring requirements are within the Environmental Protection Agency's (EPA) jurisdiction under the Federal Water Pollution Control Act, 33 U.S.C. §§ 1251 et seq. (Supp. V, 1975), as amended by Clean Water Act of 1977, 91 Stat. 1566 (FWPCA). Section 511(c)(2) of the FWPCA specifically precludes NRC from imposing or reviewing, as a condition in a construction permit (CP), any effluent limitation or other requirement other than those established pursuant to the FWPCA. In re Tennessee Valley Authority (Yellow Creek Nuclear Plant Units 1 and 2), partial initial decision, slip. op. at 31 (Feb. 7, 1978). EPA-NRC Second Memorandum of Understanding (40 FR 60115 (1975)). See A Legislative History of the Water Pollution Control Act Amendments of 1972, 93d Cong., 1st Sess., vol. 1, at 183 (1973) (remarks of Sen. Muskie). Accordingly, TVA takes the position that the water quality and monitoring issues are adequately addressed in the draft NPDES permit and that those items need only be reported to EPA in accordance with the NPDES permit.

We do not believe NRC has the jurisdictional authority to include these requirements in the environmental technical specifications. However, TVA will supply the NRC with copies of all data submitted to EPA pursuant to the requirements of the NPDES permit but not as a duplication of a reporting requirement.

7802140114

The NRC draft EIS references TVA's Final Environmental Statement (FES) as a construction permit stage FES. However, in accordance with the lead agency agreement, TVA consulted with the Regulatory Staff of the AEC (now NRC) in the preparation of the FES and responded to all AEC concerns in the FES, which was submitted to the CEQ and made available to the public on November 9, 1972. This FES evaluated the environmental impacts resulting from operation as well as construction of the Watts Bar Nuclear Plant units 1 and 2. Accordingly, references to the FES should indicate that it addressed the construction and operation impacts and is not merely a CP stage EIS.

The two enclosures contain additional specific comments on the draft environmental statement. The comments in Enclosure 1 are directed toward various commitments and conclusions formulated by the NRC staff which TVA thinks are inappropriate or unwarranted. Enclosure 2 contains comments on specific descriptions in the NRC draft statement that we recommend be corrected in the staff's final statement.

Very truly yours,

J. E. Gilleland
Assistant Manager of Power

Enclosures
cc (Enclosures):
Ms. Susanne Kebluseck, Project Manager
Environmental Projects Branch 2
Division of Site Safety and
Environmental Analysis
U.S. Nuclear Regulatory Commission
Washington, DC 20555

Enclosure I
TVA RESPONSES TO COMMITMENTS AND
CONCLUSIONS IDENTIFIED IN THE NRC STAFF
DRAFT ENVIRONMENTAL STATEMENT

I. NPDES Permit

1. P. ii, item 6B-1

The staff requires TVA to carry out environmental (thermal, chemical, radiological, ecological) monitoring programs outlined in the NPDES permit as an environmental technical specification requirement.

TVA Comment

Operational nonradiological effluent and aquatic monitoring programs will be conducted in accordance with the terms of the NPDES Permit. TVA objects to the implications of this paragraph that the monitoring programs in the NPDES Permit will be duplicated in the environmental technical specifications for the Watts Bar Nuclear Plant.

2. P. iii, item 6B-2

The staff requires TVA to notify the Director, Division of Site Safety and Environmental Analysis, of all cases where all NPDES Permit discharge limits are exceeded as a requirement of the environmental technical specifications.

TVA Comment

TVA objects to the separate reporting requirements for matters regulated by the NPDES Permit. Part II, Section A-2 on page E9 of the draft NPDES Permit contained in Appendix E of this document requires the notification of the regional administrator and the State within a five-day period of any noncompliance with those matters regulated by the Permit.

3. P. 2-13, item 2.5.2, first paragraph

The staff indicates TVA will submit their Preoperational Aquatic Monitoring Report in November of 1978.

TVA Comment

As discussed with Ms. Keblusek of the NRC staff on June 21, 1978, TVA anticipates to submit the Preoperational Aquatic Monitoring Report in accordance with the schedule identified in the NPDES Permit Part III, Section J (i.e., three months prior to the commercial operation of Unit 1).

4. P. 5-3, first paragraph

The staff believes it prudent to conduct limited monitoring for copper in the downstream mussel beds.

TVA Comment

TVA objects to the staff's recommended monitoring requirements for copper. The corrosion-erosion studies required by Part III, Item M of the NPDES Permit should be sufficient to document any copper losses within the system. The only other source of copper within the discharge would be that which occurs in the makeup water.

5. P. 6-1, third line of Section 6.2.4

It is again stated that TVA Preoperational Aquatic Monitoring Reports are scheduled for completion in November 1978.

TVA Comment

See response to Item 3.

6. P. 6-4, Section 6.3

The staff requires TVA to submit their Operational Aquatic Monitoring Program to the staff for their review before station operation and the incorporation of the program into the environmental technical specifications, as applicable.

TVA Comment

With respect to the operational nonradiological aquatic monitoring programs, (effluent and instream), it is TVA's opinion that NRC's inclusion of matters regulated by the FWPCA and contained in the NPDES Permit are outside of NRC's jurisdiction and cannot be reflected in environmental technical specifications as conditions of an operating license. Therefore, TVA objects to the proposed staff requirements and recommendations concerning aquatic monitoring as identified in the Section 6.3. In Section 6.3.5, the NRC staff's acknowledged intent that duplicate reporting requirements are likely to be required is an unwarranted example of dual regulation. Furthermore, the "Staff Evaluation of Plans for the Operational Monitoring of Aquatic Biota" fails to recognize that the regulating document for aquatic matters is the NPDES Permit requirements and not the environmental technical specifications. The NRC staff will have the opportunity to receive, review, and comment on plans and reports concerning matters regulated under the FWPCA as identified in Part III, Section O of the NPDES Permit. NRC's comments on the plans and reports should be forwarded to EPA for consideration by EPA in their evaluation and approval of the plans and reports required by the permit. Beyond this level of involvement, the NRC staff has no authority for the establishment and regulation of matters concerning the aquatic environment.

II. Transmission Facilities

1. P. iii, item 6B-4, and p. 6-8, Section 6.3.6.3

The staff requires TVA to submit an annual report on the program chemical control of vegetation on transmission line rights of way.

TVA Comment

TVA objects to the staff requirement of an annual report on pesticide usage on transmission line rights of way. The use of herbicides is regulated by the Federal Insecticide, Fungicide, and Rodenticide Act which requires the registration of all pesticides and that all subsequent uses must be within the label restrictions. In the case of hard core pesticides the Act also requires that the application must be made by certified applicators. In TVA's opinion the proposed NRC reporting requirement is outside NRC's jurisdiction and is unwarranted.

III. Cooling Towers

1. P. iii, item 6B-3, and P. 6-8, Section 6.3.6.2

The staff requires a bird monitoring program be designed to detect and report serious episodes of bird collisions with cooling towers as contrasted with occasional random collisions.

TVA Comment

TVA will conduct a bird monitoring program to detect and report serious episodes of bird collisions with the cooling towers. The bird monitoring will be conducted during peak periods of avian use for a period of time not to exceed two years. The data collected from this program will determine what the future monitoring requirements of the other TVA nuclear plants should be.

2. P. 6-8, Section 6.3.6.1, last paragraph

The staff requires that a limited term aerial remote sensing program be undertaken as part of the applicant's proposed monitoring program. This program may use color infrared and/or multispectral or multiband photography. This combined program of aerial remote sensing and ground inspection on an annual basis for a limited term would be highly sensitive in the rapid detection of any terrestrial effects due to cooling tower drift or plume interactions.

TVA Comment

Potential terrestrial effects of cooling tower and smoke plume interaction are being investigated through the use of vapor plume and drift models, atmospheric and plume chemistry relationships, and observational experience. The result of this investigation will be a recommendation on the necessity of implementing the

terrestrial effects monitoring program. It is anticipated that this recommendation will be made before the end of 1978.

The remote sensing approach for delineating effects of air pollution on vegetation is still in the experimental stage. In general, those experiments which have reported definitive results have included extensive controlled environment studies in support of the aerial reconnaisance and were concerned with less complex situations. TVA believes the on-the-ground vegetation surveillance program will be more objective and will not be dependent on results from the remote sensing program.

IV. Terrestrial

1. Page i, Item 3b

The staff concludes that the 967 acres of rural, partially wooded land owned by the applicant will be unavailable for other uses during the 40-year life of the plant.

TVA Comment

Item 1, on page 2.10-1, of the TVA FES states the following: "The major impact on land will be the conversion of approximately 967 acres of land to industrial use. That portion of this land which will be occupied by the buildings housing the nuclear steam supply system must be considered irretrievable for the foreseeable future. However, there are no anticipated routine operations of the plant which would prohibit attaining full use of the surrounding land."

Any future land use proposals by TVA would preclude the use of the 1200 meter exclusion area as defined in Section 2.1.2.2 of the Watts Bar Nuclear Plant Final Safety Analysis Report (FSAR).

2. P. 6-4, Section 6.2.5

The staff requires a one-year preoperational aerial remote survey using color infrared and/or multispectral or multiband photography.

TVA Comment

We feel that the requirements dictated in this section, which involve one-year preoperational aerial remote survey using color infrared and/or multispectral or multiband photography, are costly and unnecessary. The NRC staff provides no explanation of the purpose for conducting such a survey, and we believe that NRC should provide TVA with its rationale for such a requirement prior to our initiating the photographic work.

ENCLOSURE II
TVA COMMENTS ON SPECIFIC DESCRIPTIONS
IN THE NRC STAFF
DRAFT ENVIRONMENTAL STATEMENT

1. Table of Contents, Page v, 3.2.5 Underdrain System

Change "Underdrain" to "Power Transmission"

2. P. 2-1, Section 2.1, second paragraph

It is stated that a threefold increase in industrial water utilization downstream from Watts Bar Nuclear Plant is now projected. Based on the assessment in Section 2.3, it is TVA's opinion, that this is an inaccurate statement and reflects an incorrect understanding and usage of basic information. The TVA Watts Bar environmental impact statement included information on the current water supply withdrawals at the time the statement was prepared and not the projected water uses. This information did not include future water supply withdrawals for Sequoyah or Watts Bar Nuclear Plants. The water supply data provided in the "Environmental Information-Supplement I" included the identification of the future water use withdrawals for Watts Bar and Sequoyah Nuclear Plants even though these withdrawals had not been initiated. It further identified reactivation of the Watts Bar Steam Plant and the potential water use by the Volunteer Army Ammunition Plant if it were reactivated. This latter installation was in operation at the time of the preparation of the FES however, it has subsequently been placed in layby status. Based on the data provided in the Environmental Information Supplement I, it is TVA's assessment that the current industrial water use withdrawals from Chickamauga Reservoir are approximately 3 million gallons per day. The NRC estimate of 164 million gallons per day appears to include 50 MGD for Volunteer Ordinance which is currently inactive, 111 MGD future water withdrawal for the Watts Bar Nuclear Plant and 3 MGD for C. F. Industries (formerly Farmer's Chemical).

3. P. 2-5, Section 2.2.2, first sentence on page

We recommend the following sentence be substituted:

> Rhea and Meigs Counties rated first and second in percent change of population increase among counties in the Southeast Tennessee Development District from 1970-1975.

4. P. 2-1, Section 2.2.1

We recommend the following paragraphs be substituted for Section 2.2.1 in the draft EIS:

2.2.1 Population Changes

The principal population centers within 50 miles of the Watts Bar Plant were indicated by the applicant in the FES. Population distributions, based on the 1970 Census of Population, and projected population distributions were included for the area within 0-10 and 0-50 miles of the plant for the years 1970, 1980, and 2000. This information has been updated and expanded to also provide projected population distributions within 0-10 and 0-50 miles of the site for the years 1978, 1990, 2010, and 2020. These data are provided in the Watts Bar Nuclear Plant Final Safety Analysis Report, Tables 2.2 through 2.15, which tabulate the distributions within 22½° sectors and sections of annuli.

Projected population data were based on county projections prepared by the Bureau of Economic Analysis (BEA), in cooperation with the Southern Economic Review Groups - Georgia, North Carolina, and Tennessee. These projections incorporated the Census Bureau's 1972 "Series E" national population projections. The Southern Economic Review Groups are cooperative Federal-State groups formed to assist BEA in preparing county projections for planning and development purposes. Subdivisions of the county estimates and projections were made by TVA, Navigation and Regional Economics Branch. These subdivisions were based on census and other maps, on judgments from field experience, and on such factors as topography, transportation networks, and historical growth patterns.

In 1970 approximately 11,000 people lived within 10 miles of the Watts Bar Plant, with 80 percent of the population located between 5 and 10 miles of the site. The remainder of the area within 10 miles is sparsely populated. The population within 10 miles of the site is projected to grow to a little over 14,000 by the year 2020. Between 0 and 50 miles of the site, the population is presently about 654,000 and is expected to increase by over 38 percent to approximately 905,000 by the year 2020. Almost 50 percent of this total growth is expected to take place in the area between 40 and 50 miles from the site.

5. P. 2-1, last sentence on page

Change "Canton" to "Clinton"

6. P. 2-5, Table 2.7 "1970-1975 Population Changes"

Please see the attached Table 2.7 which has been revised.

7. P. 2-6, first complete paragraph, first sentence

The construction activity peak has been revised to mid-1978 with approximately 3900 workers at the site.

8. P. 2-7. Section 2.3.2, second paragraph

It is noted that two temporary chemical cleaning holding ponds have been constructed in the yard holding pond area. TVA has not made a final decision concerning the disposition of these ponds upon completion of construction. If it is determined that future chemical cleaning operations may be required with the operating plant, TVA may elect to retain these ponds. If it is determined that future cleaning operations will not be required then the ponds will be leveled and graded in accordance with TVA's original plan as stated in the draft EIS.

9. P. 2-11, Section 2.4.1, paragraph 2

The reference to J. L. Marshall, Lightning Protection (reference number 31), at the end of the second sentence does not appear to be correct.

10. P. 2-11, Section 2.4.1, paragraph 2

We suggest the second sentence be rewritten as follows:

"The calculated resultant tornado frequency and the recurrence interval of a tornado striking any selected point in the 25,600 square kilometer (10,000 square miles) area containing the site is 7.6 x 10^{-4} tornadoes per year and 1,300 years, respectively."

This statement more accurately describes the results of the calculations by the Thom Method.

Table 2.7

1970-1975 POPULATION CHANGES

	(CARCOG/SETDD* Population)					
	Population			Annual Rate of Increase		
	1970	1973	1975	70-73	73-75	70-75
Meigs County	5,219	5,596	6,117	2.4	4.6	3.2
Decatur**	698	746	807	2.3	4.1	3.0
Rest of County	4,521	4,850	5,310	2.4	4.7	3.3
Rhea County	17,202	19,220	20,236	3.8	2.6	3.3
Dayton***	4,361	4,463	4,278	0.8	-2.1	-0.4
Graysville	951	1,155	1,220	6.7	2.8	5.1
Spring City	1,756	1,858	1,902	1.9	1.2	1.6
Rest of County	10,134	11,744	12,836	5.0	4.5	4.8
CARCOG/SETDD Total	509,369	538,720	548,889	1.9	1.0	1.5
Municipal Total	310,503	318,966	320,891	0.9	0.3	0.7
Rest of County Total	198,866	219,754	227,998	3.4	1.9	2.8
Tennessee	3,926,018	4,086,891	4,174,100	1.4	1.1	1.2

*Chattanooga Area Regional Council of Governments/Southeast Tennessee Development District.

**City is in two counties.

***City annexed area between 1970 and 1975 that was not included in the estimate.

Source: Current Population Reports, Series P-25, #658 and #690. U.S. Bureau of the Census.

11. P. 3-1, Section 3.2.1, last paragraph, first sentence

The concentration factor in the condenser circulating water system will average 1.9, not 1.6 and should be revised.

12. P. 3-18, "Containment Ventilation System"

(a) The containment ventilation system description assumes that the containment will be purged 24 times per year plus a 10 cfm continuous purge. We have assumed 6 containment purges per year plus a 10 cfm continuous purge.

(b) The 16,000 cfm containment cleanup system which was to operate for 16 hours before containment purge has been deleted.

(c) The auxiliary building HEPA filter has been deleted.

13. P. 3-21, Section 3.2.3.3

The statement, "When the resin is to be packaged, it will be sluiced to shipping containers but will not be solidified prior to shipment offsite for disposal." is incorrect and should be replaced by the following sentence:

> Spent resins will be combined with a suitable binding agent to form a solid matrix prior to offsite shipment for disposal.

TVA is preparing a response to WBNP FSAR NRC question 321.17, and will commit to solidification of spent resins prior to offsite shipment for disposal.

14. P. 3-22, second paragraph

The first sentence should be revised to read as follows: "TVA currently plans to use potassium chromate for corrosion inhibition in the component cooling water system."

15. P. 3-26, Table 3.7

The "Approximate Date Required" section of this table should be revised as follows:

TABLE 3.7

WATTS BAR TRANSMISSION SYSTEM DESCRIPTION

Line Name	Voltage (kV)	Approximate Date Required
STEP I		
Bull Run-Sequoyah, Loop into Watts Bar Nuclear Plant	500	In Service
Watts Bar Hydro-Watts Bar Nuclear No. 1	161	In Service
Watts Bar Hydro-Watts Bar Nuclear No. 2	161	In Service
STEP II		
Watts Bar-Volunteer	500	June 1979
Watts Bar-Roane	500	In Service
Watts Bar-Sequoyah No. 2	500	In Service

16. P. 4-2, "Newly Proposed Watts Bar- Volunteer Transmission Line"- last paragraph

(a) First sentence change ". . . Tennessee State Historical Preservation Offices. . ." to ". . . Tennessee State Historic Preservation Officer. . ."

(b) Second sentence should be replaced with the following two sentences:

> Final historical and archaeological coordination has been completed. The Tennessee State Historic Preservation Officer has concurred with TVA's determination that the subject transmission line will not affect any historical or architectural properties included in or eligible for inclusion in the National Register of Historic Places."

This information was provided to the NRC by letter from J. E. Gilleland to Edson G. Case dated May 19, 1978.

17. P. 4-5, Reference 1

Change ". . . Volunteer Tennessee 500 kV. . ." to ". . . Volunteer, Tennessee - 500-kV. . ."

18. P. 5-3, Section 5.3.4, third paragraph, first sentence

In light of recent amendments to the Federal Water Pollution Control Act, made by the Clean Water Act, 91 Stat. 1567 (1977), which now subject Federal agencies to state administrative authority in the area of water pollution abatement, this statement is incorrect. To be correct, the statement should read:

> Even though the State of Tennessee now administers the NPDES in Tennessee, the NPDES permit for this facility will be issued by EPA because the NPDES permit drafting had already progressed substantially by the time the NPDES authority was transferred to Tennessee by EPA.

19. P. 5-3, Section 5.3.4, last paragraph, third sentence

The concentration of phosphorus resulting from initial metal cleaning wastes is limited to a maximum of 1.0 mg/l as elemental phosphorus, not as phosphate and should be clearly noted in the DES.

20. P. 5-5, Section 5.3.6, first paragraph

The plant intake and evaporation rate figures appear to be inconsistent with the figures in the table on page 3-3 and should be revised accordingly.

21. P. 5-5, last line on page

The discussion from the bottom of page 5-5 is not continued onto page 5-6, the discussion on page 5-5 should be completed.

22. P. 5-7, Section 5.4.1.2, eighth paragraph, last line

The word "spent" should be changed to "spend"

23. P. 5-9, Table 5.2

This table has been updated and should be replaced with the attached revised table.

24. P. 5-8, Section 5.4.2

Paragraphs three through six should be rewritten as follows:

Data for ichthyoplankton in the vicinity of the Watts Bar site during the 1976 spawning period (See Appendix C, Table C-16) indicate uniform distribution of the early life stages across a river transect. Therefore, ichthyoplankton entrainment approximates hydraulic entrainment. TVA has estimated that, for 1976, approximately 0.2 million eggs and 21.8 million larvae would have been entrained if the plant had been operational. These estimated losses represent 0.32 percent of the eggs and 1.08 percent of the larvae transported past the Watts Bar site. For 1977, losses were estimated at .69 percent of the eggs and .62 percent of the larvae. Table 5.2 shows the estimated entrainment for each family of fish collected. Only the freshwater drum (Sciaenidae) was represented in the collection of eggs. Clupeidae, including gizzard and threadfin shad, contributed approximately 91.5 percent of the total larvae collected. Freshwater drum and Lepomis supp. larvae contributed 5.5 percent and 1.9 percent, respectively. The clupeids, freshwater drum, and Lepomis are not restricted to the tailrace habitat for spawning success.

The importance of the tailrace as a spawning site for the migratory spawners was not demonstrated by the ichthyoplankton data. These taxa represented less than one tenth of one percent of the total larvae collected. The sauger, Stizostedion canadense, which would be expected to spawn in the tailrace area, is also one of only two identified host fishes for the glochidial stage of the endangered mussel, Lampsilis orbiculata. The ichthyoplankton data indicate limited abundance of sauger, i.e., only one larva was collected in 1976. The other identified host is the freshwater drum which would have been sustained entrainment losses during 1976 of 0.32 percent and 0.61 percent for eggs and larvae, respectively.

Based on the two years of ichthyoplankton data, it is concluded that the losses of ichthyoplankton due to entrainment will be at acceptably low levels and that neither the reservoir fishes nor endangered mussel will be significantly impacted by such losses. Additional monitoring of the ichthyoplankton passing the site indicated that the 1976 year was not atypical with regard to tailrace spawning. Data for 1978 will be collected and presented in the applicant's preoperational monitoring report.

Table 5.2

Estimated Seasonal Entrainment (%) of Fish Families Collected in the Tennessee River at Watts Bar Nuclear Plant, 1976 and 1977

Family	1976 Number Transported	1976 Number Entrained	1976 Percent Entrainment	1977 Number Transported	1977 Number Entrained	1977 Percent Entrainment
Sciaenid Eggs	6.62×10^7	2.15×10^5	0.33	4.46×10^7	2.59×10^5	0.60
Clupeidae	2.26×10^9	2.50×10^7	1.13	1.08×10^{10}	6.64×10^7	0.61
Hiodontidae	-	-	-	3.28×10^6	1.03×10^4	0.31
Cyprinidae	1.18×10^7	7.76×10^4	0.67	1.34×10^7	2.28×10^5	1.70
Catostomidae	3.73×10^5	-	-	3.26×10^7	8.07×10^4	0.25
Ictaluridae	1.37×10^7	2.52×10^4	0.18	1.80×10^7	1.78×10^5	0.99
Percichthyidae	2.45×10^6	3.85×10^4	1.55	4.34×10^7	2.89×10^5	0.67
Centrarchidae	6.23×10^7	6.30×10^5	1.01	2.81×10^8	2.53×10^6	0.90
Percidae	1.65×10^5	-	-	3.73×10^6	2.70×10^4	0.72
Sciaenidae	1.61×10^8	9.82×10^5	0.61	3.18×10^8	1.73×10^6	0.54
Total Eggs	6.87×10^7	2.15×10^5	0.32	7.56×10^7	5.20×10^5	0.69
Total Fish	2.51×10^9	2.18×10^7	1.08	1.15×10^{10}	7.11×10^7	0.62

25. P. 5-21, Table 5.10

(a) The section for gaseous effluents includes a comment that the maximum effect of Rn-222 is "presently under consideration by the Commission." The DES presents data on page 5-23 which could be incorporated into Table 5.10.

(b) At the bottom of the page in the table title "(NUREG-0016)" should be "(NUREG-0116)"

26. P. 5-25, Section 5.6

All discussions of "operators" should be revised to "operating personnel."

27. P. 6-1, Section 6.2.1

(a) In this section the 10-meter level is converted to 30 feet, however, the correct conversion is 33 feet.

(b) The dew point is not measured at the one-meter level which is not indicated in the third from the last sentence in this section.

(c) The next to the last sentence in this section should be changed to read "A dew point sensor is operational at the 10-meter (33-foot) level."

28. P. 6-1, Section 6.2.4, first paragraph, last sentence

Baseline monitoring of adult fish populations in the vicinity of the plant will be continued through to March of 1979. The last sentence should be revised accordingly.

29. P. 6-2, "1. Objectives and Scope"

The first sentence should be revised to read, "The objective of this 2-year study (March 1977 - March 1979). . . "

30. P. 604, Section 6.3.1

The second sentence is not clear and should be changed to read, "Vertical temperature gradients between the 10- to 46-meter (33- to 150-foot) and the 10- to 91-meter (33- to 300-foot) levels, and the 10-meter (33-foot) temperature and dew point measurements will be displayed in the reactor control room."

31. P. 6-9, Reference 4, second line

Change ". . . Line Connection, . . ." to ". . . Line Connections,..."

32. P. 8-2, Footnote

The date "1958" should be revised to "1978"

33. P. 9-1, Section 9.1, last two sentences

The Watts Bar Nuclear Plant operation delay has been due to construction delays, not forecast reductions as indicated in the draft EIS and Watts Bar units 1 and 2 are now scheduled to begin operation in December of 1979 and September 1980, respectively.

34. P. 9-2, Section 9.3.1

The 1,300 MW of pumped-storage capacity should not be included with hydro and Browns Ferry Nuclear Plant units 1 and 2 as having lower operating cost than the Watts Bar units. All the capacity used to pump the pumped-storage units will have higher costs than Watts Bar units 1 and 2, and therefore the pumped-storage cost would also be higher.

35. P. 10-1, Section 10.2.2, first paragraph, second sentence

Change ". . . full time operators." to ". . . full time operating personnel."

36 Appendix C, P. C-7, third complete paragraph, line fourteen

The sentence beginning "The percent contribution . . .". The generally higher numbers of blue-green algae in the spring and fall of 1975 referred to in this sentence were not found in the 1976 samples. Therefore, it would be difficult to ascribe any significance to the high numbers obtained in 1975. (The 1976 phytoplankton data was submitted to NRC by letter from J. E. Gilleland to O. D. T. Lynch dated January 3, 1978.

37. Appendix C, P. C-13, "Secondary Production - Benthos"

A recent mussel survey in Chickamauga Reservoir in the vicinity of TRM 520.2 has revealed the presence of Dromus dromas, a species of mussel on the Department of Interior's list of threatened and endangered species. A brief statement summarizing this finding is as follows:

> During a June 7-8, 1978, mollusk survey conducted in Chickamauga Reservoir for other TVA program activities, two specimens of Dromus dromas were collected. This represents the first reported occurrence of this mussel species in Chickamauga Reservoir. This species is listed on the Department of threatened and endangered species. During the survey specimens of D. dromas and L. orbiculata were collected between Tennessee River Mile (TRM) 520.0 and TRM 521. This is the first record of L. orbiculata being collected at a location other than near TRM 527.7. This collection verifies that L. orbiculata is more widely distributed in Chickamauga Reservoir than previous data had indicated. The area where D. dromas was collected is located on the left overbank of the reservoir, 7.6 miles downstream from the Watts Bar Nuclear Plant. Because of the initial rapid mixing to be provided by the Watts Bar discharge diffuser and the subsequent additional mixing which will occur in the 7.6-mile reach of the river, the area of collection will not be subjected to plant induced stresses.

38. Appendix E, Draft NPDES Permit

Attached for your information is a copy of the two letters which were submitted to EPA containing the comments generated from TVA's review of the draft NPDES permit.

39. Appendix E, P. E-15, draft 401 Certification from the State of Tennessee.

When available TVA will provide the NRC a copy of the letter sent to the State of Tennessee containing the comments generated from TVA's review of the draft 401 certification.

April 14, 1978

Mr. John C. White
Administrator, Region IV
Environmental Protection Agency
345 Courtland Street, NE.
Atlanta, Georgia 30308

Re: Watts Bar Nuclear Plant
NPDES Permit No. TN0020168

Dear Mr. White:

We have reviewed the draft NPDES permit and Draft 316(a) Tentative Determination for the referenced facility, and have the following comments and requests.

The permit as drafted will expire on September 30, 1980, thus limiting its effective period to approximately two years. Although regulations do not require that the NPDES permits be issued for five-year terms this has been the practice for permits issued to date and is based on sound policy and legal considerations. Section 101(f) of the Federal Water Pollution Control Act states that it is the national policy to make the best use of available manpower and funds in implementing the Act. Significant costs and manpower resources are involved in obtaining an NPDES permit for a nuclear plant. We can see no benefit for requiring that the permit process, and resulting expenditure of funds and commitment of resources by TVA and EPA, be repeated within two years.

Part III., section P suggests that the permit shall be modified or revoked and reissued to comply with applicable effluent limitations promulgated pursuant to the settlement agreement in Natural Resources Defense Council v. Train, 8 ERC 2120 (D.D.C. 1976). It is our view that neither the consent decree nor the FWPCA require or authorize the conditions specified in Part III., section P.

We also have the following comments and requests related to specific permit effluent requirements.

Part I, page 3, Serial 002

The mixing zone dimension indicated in the draft permit is 225 feet for both width and length. As shown in the TVA report WR29-1-85-100, February 1978, the dimensions for both length and width should be 240 feet.

Monitoring for suspended solids, settleable solids, total dissolved solids, ammonia nitrogen, copper, iron manganese, and zinc have been included for this serial discharge and the plant intake, Serial 019. The plant will operate with low cooling cycles of concentration and there will be no additions of the listed constituents to the cooling water. Any additions

of these constituents through inclusion of low-level wastes below detectable amounts in the discharge. Additionally, there is no justification for these requirements included in the guidelines for this category. We request that this monitoring requirement be deleted.

Part I, page 8, Serial 017

The source listed as a "neutral waste sump" is a neutralizer waste tank; however, we did not revise the flow diagram to indicate this change, nor do we request that the permit language be changed. The comment is included to clarify any misunderstanding.

Part III.A., page 29

The Serial 009 referred to in this section should be changed to Serial 004.

In addition to the draft permit and Draft 316(a) Tentative Determination, we have reviewed the March 24, 1978, letter from Mr. George L. Harlow to Mr. Jack McCormick, Tennessee Department of Public Health. The letter states that "any conditions felt warranted by your office can be included in your certification for this project and will be appended to the NPDES permit." Under the Clean Water Act of 1977, TVA is no longer exempt from state certification pursuant to Section 401. This section specifies that the certification must set forth limitations and requirements necessary to ensure compliance with Sections 301, 302, 303, 306, and 307 of the FWPCA. However, it does not provide that a state can include "any condition felt warranted" in a certification and provide that the condition becomes an NPDES permit condition.

Pursuant to discussions with Mr. Charles E. Kaplan of your staff, we have enclosed two copies of a revised Water Use Diagram and supplemental thermal data which was developed in response to specific questions from Mr. Kaplan. Two copies of the Water Use Diagrams of reproduction quality were sent directly to Mr. Kaplan.

If you have any questions concerning these comments and requests, please let me know.

Sincerely yours,

Harry G. Moore, Jr., Ph.D.
Acting Director of Environmental Planning

June 30, 1978

Mr. John C. White
Administrator, Region IV
Environmental Protection Agency
345 Courtland Street, N.E.
Atlanta, Georgia 30308

Re: Watts Bar Nuclear Plant
NPDES Permit No. TN0020168

Dear Mr. White:

We have reviewed the Public Notice, and Notice of Proposed Section 316(a) Determination for the above-referenced facility and have the following comments.

The letter from Mr. George L. Harlow to me, in response to TVA's previous comments concerning the expiration and language of Part III.P., stated that these requirements are in conformance with present headquarter's directives. However, we wish to reiterate TVA's previous comments.

The permit as drafted will expire on September 30, 1980, thus limiting the effective period to approximately two years. Although regulations do not require that the NPDES permits be issued for five-year terms, this has been the practice for permits issued to date and is based on sound policy and legal considerations. Section 101(f) of the Federal Water Pollution Control Act states that it is the national policy to make the best use of available manpower and funds in implementing the Act. Significant costs and manpower resources are involved in obtaining an NPDES permit for a nuclear plant. We can see no benefit for requiring that the permit process, and resulting expenditure of funds and commitment of resources by TVA and EPA, be repeated within two years.

Part III., section P suggests that the permit shall be modified or revoked and reissued to comply with applicable effluent limitations promulgated pursuant to the settlement agreement in Natural Resources Defense Council v. Train, 8 ERC 2120 (D.D.C. 1976). It is our view that neither the consent decree nor the FWPCA require or authorize the conditions specified in Part III., section P.

We also have the following comments and requests related to specific permit requirements.

Part I, Serial 002

We wish to reiterate our comment included in my April 14, 1978, letter concerning the monitoring required for this serial discharge and Serial 019.

The plant will operate with low cooling cycles of concentration and there will be no additions of the listed constituents to the cooling water. Any additions of these constituents through inclusion of low-level wastes should be below detectable amounts in the discharge. Additionally, there is no justification for these requirements included in the guidelines for this category. We request that this monitoring requirement be deleted.

This serial discharge together with Serial 001 contain Serial Discharge 003, 004 and 008 at the point of discharge, and both 001 and 002 have applicable pH limits. We therefore request that the pH limit for 003, 004 and 008 be omitted.

Part I, Serial 009

We request that the monitoring requirements of the parameters chlorine residual and fecal coliforms be deleted. With this deletion, the monitoring requirements in the permit would be consistent with the monitoring requirements established by the State of Tennessee in the Section 401 Certification.

Part I, Serial 008

We request that a footnote be added stating that the limitations and monitoring are not applicable when discharge is to be the radwaste treatment system.

Part III, Item J

The preoperational nonradiological aquatic monitoring programs referred to in this section have already been implemented, and portions have been completed. Detailed descriptions of these programs were submitted to Mr. Charles H. Kaplan, of EPA, by letter from Dr. Peter A. Krenkel, dated August 31, 1977. It is our understanding that this item would reflect EPA's approval for these programs in the final permit.

Part III, Item K

The operational nonradiological aquatic monitoring programs have already been submitted to Mr. Kaplan by letter from Dr. Krenkel dated August 31, 1977. We understand this section will reflect EPA's approval of these programs in the final permit.

In addition to these comments, we are sending to the State of Tennessee and to you under separate cover TVA comments on the Tennessee draft certification.

Mr. John C. White June 30, 1978

If you have any questions concerning these comments and requests, please let me know.

Sincerely yours,

Larry G. Moore, Jr., Ph.D.
Acting Director of Environmental Planning

UNITED STATES ENVIRONMENTAL PROTECTION AGENCY
REGION IV
345 COURTLAND STREET
ATLANTA, GEORGIA 30308

50-390
391

AUG 1 1978

Mr. William H. Regan, Jr.
Chief, Environmental Projects Branch 2
Division of Site Safety and
Environmental Analysis
U. S. Nuclear Regulatory Commission
Washington, D. C. 20555

Dear Mr. Regan:

We have reviewed the Draft Environmental Impact Statement on the Watts Bar Nuclear Plants, Units 1 and 2, and have determined that the facility is capable of meeting the environmental radiation standards for nuclear power operations, 40 CFR 190 as well as the dose design objectives of 10 CFR 50, Appendix I.

There are, however, a number of areas which should be addressed in further detail in the Final Statement, i.e., the limits and control of all radionuclide plant effluent covered under the technical specifications for plant operation; the discharge of liquid radwaste; sensitivities of radiation monitors at the various effluent release points in terms of their ability to measure radioactivity concentration limits and discharge, and the radio-chemical toxicity of releases.

SPECIFIC COMMENTS

Pg. 5-23 Radioactive Effluents

The application of 100-year environmental dose commitment (EDC) for radioactive effluents such as Radon-222 is appropriately noted. We are encouraged that NRC is calculating EDC's as this is a big step toward evaluating the total EDC which EPA has urged for several years. Assessment of the total impact of the nuclear fuel cycle should incorporate the projected releases over the lifetime of the plant rather than just the annual release and be extended to consider for several half-lives or 100 years beyond the period of release.

Pg. 8-1 Decommissioning and Land Use

Upon completion of power generation a commercial nuclear power plant possesses waste characteristics quite different from those generated during operation. The environmental

7821600037

C002
ES
1/0

effects of a plant's considerable value and radioactive inventory should receive consideration in its decommissioning plan before the end of the reactor's useful life. Considering the size, complexity and number of commercial nuclear power plants, it would appear prudent to begin planning for decommissioning in an ALRRA fashion as early in plant life as possible. For example, it may be necessary to institute plant design changes to facilitate future dismantling. In addition, evaluation of social impacts and resource commitment on present and future generations should be considered. We believe an orderly decommissioning procedure should be developed for each site containing a LWR nuclear power plant well before its retirement.

Relative to non-nuclear discharges, it should be noted that the NPDES permits for the sewage treatment plant (Pages E-2 and E-3) must be consistent with the more stringent State permit (Page E-15) for fecal coliform and chlorine residual effluent characteristics. It would also be advantageous to show in Figure 3.3 the approximate location and length of the water treatment plant outfall pipe. This pipe must be extended to an adequate length into the river to guarantee proper dilution and mix.

On the basis of the above, the facility was rated LO-2, i.e., no significant environmental objections, however, additional information is requested. As soon as the final statement is available, we will need five copies for our review.

If we can be of further assistance, feel free to call on us.

Sincerely yours,

John A. Cable, Deputy

for John C. White
Regional Administrator

TENNESSEE
STATE PLANNING OFFICE

RAY BLANTON
Governor

STEPHEN H. NORRIS
Director

660 CAPITOL HILL BUILDING
301 SEVENTH AVENUE, NORTH
NASHVILLE, TENNESSEE 37219
615-741-1676

August 7, 1978

Mr. William H. Regan, Jr., Chief
Environmental Projects Branch 2
Division of Site Safety and Environmental Analysis
Nuclear Regulatory Commission
Washington, D. C. 20555

RE: DEIS - Watts Bar Nuclear Plant, Units 1 and 2, TVA

Dear Mr. Regan:

Please find enclosed comments from the Tennessee Department of Conservation concerning the above referenced EIS.

If I may be of further assistance, please contact me.

Sincerely,

Bette A. Osborne
Natural Resource Staff

BAO/fe

Enclosure

782230090

Tennessee Department of CONSERVATION

Division of Planning and Development

2611 West End Ave. Nashville, TN 37203 [615] 741-1061

MEMORANDUM

TO: Betta Osborne

FROM: Walter L. Criley WLC/ze.

DATE: August 1, 1978

SUBJECT: Draft Environmental Statement
Operation of Units 1 & 2 Watts Bar
Nuclear Plant TVA

The Tennessee Department of Conservation has reviewed the above referenced proposed project and submits the following comments:

The data base of the Tennessee Heritage Program shows the following reported occurrences of significant elements of natural diversity near the site of the Watts Bar Nuclear Plant:

Lampsilis orbiculata (Pink Mucket Pearly Mussel) Listed as an Endangered species on Federal Lists[1], State Lists[2], and Lists of the Tennessee Heritage Program. Collected 1.0 mile below Watts Bar Dam - 1975.

Pleurobema cordatum Lea (Pigtoe Pearly Mussel) Listed as a species of Special Concern by the Tennessee Heritage Program. Collected 1.0 mile below Watts Bar Dam - 1975.

Pandion haliaetus (Osprey) Listed as an Endangered species on State Lists and Threatened on Lists of the Tennessee Heritage Program. Old nest site on Yellow Creek about 0.5 kilometer from the Tn. R. A pair of mature birds seen at site in April of 1974.

This Environmental Statement acknowledges the existence of an Osprey nest within the project area and states that the species is not classified as threatened or endangered by the U.S. Fish and Wildlife Service. This may be true; however, the Tennessee Wildlife Resources Agency has classified the bird as Endangered in Tennessee and the Tennessee Heritage Program lists it as Threatened. Care should be taken to protect this nest site from disturbance or destruction since it may once again be utilized in the future. The Tennessee Heritage Program data base shows only five active Osprey nests in the State of Tennessee in 1978.

Ray Blanton, Governor Walter L. Criley, Director B. R. Allison, Commissioner

This plant is on a section of the Tennessee River which has been designated as a mussel sanctuary (control area) by the Tennessee Wildlife Resources Agency. This section of the river serves as habitat for one known Federally endangered species and another which is of Special Concern to the Tennessee Heritage Program due to its limited distribution.

While the report indicates that the aquatic biota will not be significantly impacted, care should be taken to prevent continued degradation of this section of the Tennessee River since it is already classified as "effluent - limited" due to the fact that it does not meet dissolved oxygen criteria for the protection of aquatic biota[3].

The Tennessee Valley Authority anticipates occasions when the river temperature will exceed the 30.5°C (86.9°F) which has been set as a maximum acceptable level by the Tennessee Water Quality Control Board and the Environmental Protection agency. Such a situation would most likely occur during summer months when the river's flow rates are low and power generating demands are high. The low flow rates could result in increased concentrations of the estimated 987 kg/day of Sulfate, 630 kg/day of Sodium and 344 kg/day of Chloride contained in the plant effluent. This situation would represent a significant stress to the aquatic biota in the river downstream of the plant.

1 USDI/FWS 1976 U.S. Federal Register 41 (115) June 14, 1976 .

2 Tennessee State List - Enabling Authority - "Tennessee Nongame and Endangered or Threatened Wildlife Species Act of 1974 (Public Chapter 769)"

3 Water Quality Management Plan for the Upper Tennessee River Basin, Tennessee Department of Public Health, Nashville, October 30, 1975

pm

cc: Bill Yambert

TENNESSEE VALLEY AUTHORITY
CHATTANOOGA, TENNESSEE 37401
830 Power Building

SEP 6 - 1978

Mr. Daniel Muller, Acting Director
Division of Site Safety and
Environmental Analysis
U.S. Nuclear Regulatory Commission
Washington, DC 20555

Dear Mr. Muller:

In the Matter of the Application of) Docket Nos. 50-390
Tennessee Valley Authority) 50-391

Please refer to TVA's submittal to you on July 31, 1978, regarding TVA's comments on the Nuclear Regulatory Commission's (NRC) Draft Environmental Impact Statement (EIS) for the TVA Watts Bar Nuclear Plant (WBNP).

Item 13 on page 5 of Enclosure II was submitted in error and should be deleted. The statement on p. 3-21, Section 3.2.3.3 of the aforementioned EIS regarding spent resin packaging is correct as written. TVA is preparing a response to WBNP, FSAR, NRC question 321.17 which will restate TVA's position on this matter. Mr. O.D.T. Lynch of your staff was notified by telephone of this correction on August 23, 1978.

Very truly yours,

J. E. Gilleland
Assistant Manager of Power

cc: Ms. Suzanne Koblusek, Project Manager
Environmental Projects Branch 2
Division of Site Safety and
Environmental Analysis
U.S. Nuclear Regulatory Commission
Washington, DC 20555

PLENTY
ENFORCEMENT DIVISION

THE FARM – 155 DRAKES LANE – SUMMERTOWN, TENNESSEE 38483 – PHONE (615) 964-3574

RE: Application No. TN0020168
Public Notice No. 78TN006
NPDES Permit Application
Tennessee Valley Authority
Watts Bar Units 1 and 2

June 28, 1978

Enforcement Division
Environmental Protection Agency
345 Courtland Street, NE
Atlanta, Georgia 30308
ATTN: Mona Ellison

Dear MS. Ellison,

I received Notice 78TN006 on June 26, 1978. I am submitting this comment before the close of the thirty day period on July 1, 1978. I wish the contents of this comment to be fully addressed before the NPDES permit is issued for this application.

My name is Albert Bates. I reside at 156 Drakes Lane, Summertown, TN, 38483. I make this comment on behalf of PLENTY, a world charitable relief organization, by virtue of our interest in the State of Tennessee and the North American continent as a suitably safe and healthy habitat.

I agree to be subject to examination on all matters contained herein at our own expense. Areas which I contest are those set out in the Application's section 1.e., page 1, Proposed Pollution Abatement Facilities--neutralization and/or sedimentation of plant operating wastes: and PART I, Section A, page 7, EFFLUENT LIMITATIONS AND MONITORING REQUIREMENTS--Liquid Radwaste System. The part of the system I am concerned with is outlined on the diagram I enclose.

[illegible]

1. e. Description of Proposed Pollution Abatement Facilities

COMMENT:

The proposed radioactive liquid waste treatment system is one which allows some portion of the radwaste to be discharged into the Tennessee River. This system cannot be considered effective in eliminating radioactive liquid waste from the waste water discharge. Unless an alternate system with proven effectiveness is substituted, all unnaturally radioactive waste water should be gathered and stored for permanent isolation from the biosphere.

The proposed pollution abatement system would certainly result in loss of life and serious debilitating diseases to the population downstream, and within the water-currents of the air-ocean world, now and in ages to come. Permanent degradation of the life-cycle--by permitting sedimentation of persistent, highly toxic radionuclides in the fresh water channels which sustain life--is criminally irresponsible.

[illegible]

A. EFFLUENT LIMITATIONS AND MONITORING REQUIREMENTS--Liquid Radwaste System

COMMENTS:

(1) Applicant-permittee proposes to limit discharges to the Tennessee River to 15 mg/l average and 20 mg/l maximum liquid radwaste daily. Dilution factors--the mg/l notation--make no indication of the weight, activity, persistence, or biological effectiveness of the suspended solids comprising the liquid radwaste discharge. Such indications are necessary for any realistic assessment of potential damage to biota.

(2) Several hundred different actinides may be contained in the discharge, principal among them being H-3, Ra-226, Cs-137, Sr-90, and I-131 by volume; Y-90,91, Rn-222, Ra 224,225, Th-234, and Cm-242 by activity; Ni-59, Rb-87, I-129, Cs-135, U-233,234,235 236,238, Np-237, Pu-242,244, and Cm-247 by persistence; and C-14, K-42, Po-210, Pu-236, 238, 239, 240, 241, and Am-241 by biological effectiveness. The permit neglects to specify any breakdown of these radionuclides, each of which presents a characteristic individual hazard to health.

(3) The proposed radwaste discharge is carcinogenic, teratogenic, mutagenic, and has non-specific immunity-reducing and life-shortening effects possible at doses well below that expected in drinking water downstream of this discharge. NRC and EPA have calculated health effects, including cancers and genetic diseases, expected in the general population, and found this acceptable. NRC does not have constitutional authority to accept health effects on behalf of unconsenting private citizens. Recent EPA public forums have demonstrated strong public opposition to the imposition of radioactive poisons on future generations. Recent acts of Congress have expressly forbidden release of cancer-causing material to the population. The Tennessee Code forbids intentional poisoning under penalty of life imprisonment.

(4) Health, physical security and life are rights and privileges guaranteed by the Federal and State Constitutions to all citizens. They may not be deprived without due process, meaning individual legal proceedings against any citizen to be deprived. Issuance of the permit as presently written would serve to deprive unspecified citizens of these rights and privileges and would thereby constitute "state action" within the meaning of I 42 U.S.C.A. 1981-5, the Civil Rights Acts. Moreover, this deprivation would fall unequally upon those with greatest susceptibility or who experienced the greatest exposure by virtue of geographic location or personal lifestyle. Such discrimination would run contrary to the Equal Protection Clause of the U.S. Constitution. EPA and the State of Tennessee are specifically forbidden from awarding the permit.

(5) Deaths to present and future generations projected by EPA and NRC to result from liquid radwaste discharges to the biosphere, insofar as they are committed intentionally by TVA, EPA, and State Public Health are humanicide within the meaning of the Nuremburg proceedings, the U.N. Declaration of Human Rights and subsequent covenants, and international treaties to which the United States is signatory. Humanicide is a crime of state for which individual officers, acting in their official capacity, may be held personally responsible.

(6) EPA and TVA have estimated the dose to an individual maximally exposed to the liquid radwaste discharge after dilution in the Tennessee River to be less than 1 millirem (mrem) per year. While this figure is extremely unrealistic and non-conservative, it can be accepted momentarily for the sake of argument. Recent scientific evidence based upon human experience and laboratory work in vitro at low dose ranges (not mathematically extrapolated downward from A-bomb doses as the older data had been) indicates that 0.1 to 1 mrem increases cellular damage 1%. EPA estimates that radiation causes 22,224 health effects/yr. in the U.S.. Background

radiation is postulated now to be the cause of a very large percentage of all non-accidental deaths in the world population. Increases of even a single mrem yearly can therefore be seen to have significant impact on the public health. This impact is undesired by the majority of its victims. While EPA and State permissible limits are constantly revising downward in light of new evidence of serious risks previously unrecognized, the long-term genetic ramifications of past error are yet multiplying. Where radiation is concerned, there is no safe dose, and no known human tolerance.

Respectfully submitted,

Albert Bates

Albert Bates

cc:f

Water Quality Control Board
Tennessee Department of Public Health
621 Cordell Hull Building
Nashville, TN 37219

Mr. David Freeman
Tennessee Valley Authority
TVA Towers
Knoxville, TN

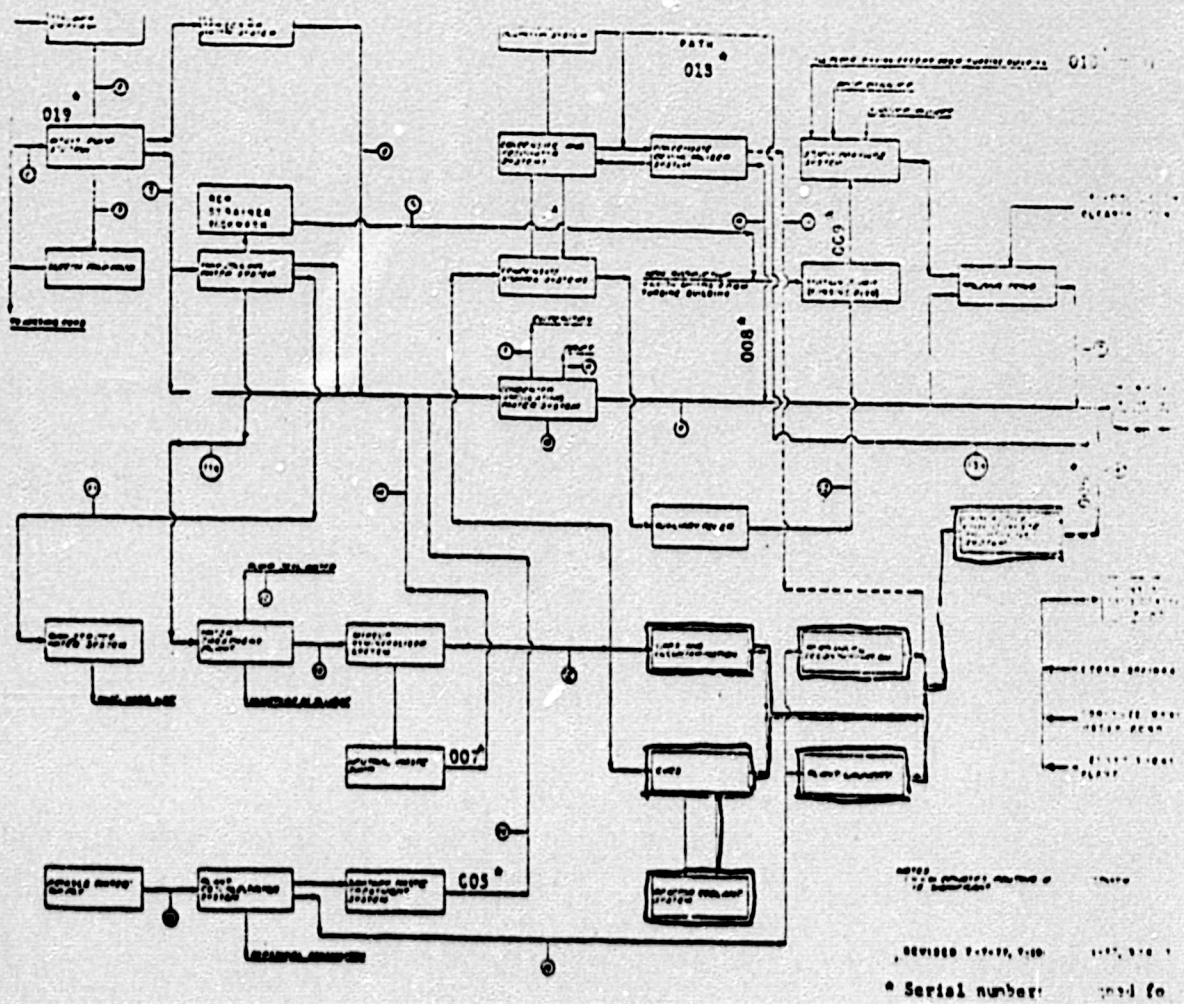

WATER BAR NUCLEAR PLANT - WATER USE DIAGRAM

* Serial number ... used fo
identification ... tenit

Rivers, bays and oceans change low-level radiation (nuclear fission products) into high-level concentrations and, therefore, high human risks for cancers and unwanted genetic changes. These fission products also bring about unhealthy changes in the natural aquatic biota from biological magnification in aquutic food webs. These kind of changes tend to make humans the endangered species of our planet, the earth.

PUBLIC HEARING DEMOCRACY

TVA's Draft Environmental Statement concerning the construction of Yellow Creek Nuclear Plant near Iuka, Miss. (Docket numbers STN 50-566 and STN 50-567, as of June 1977, NRC.

To:— Second phaseof this hearing dealing with radiological health and safety, July 6, 1978, at Tishomingo County Courthouse, Iuka, Mississippi.

And to:— U. S. Environmental Protection Agency, Region IV, Water Enforcement Branch, 345 Courtland Street, Atlanta, Ga. 30308.

Regarding the proposal for issuance of Pollutant Discharge System Permit for Yellow Creek Nuclear Plant (and Watts Bar-NPDES TN0020168).

From:— Louis G. WILLIAMS, Ph. D., Aquatic Ecologist, Dept. of Biology, P. O. Box 1927, University, Alabama 35486.

In the United States nuclear power plants are allowed to discharge low-level liquid radwastes and radioactive gases respectively into public waterways and the atmosphere. The intermediate liquid radwastes must be shipped to NRC-approved sites for burial (however, some sites have been closed since they were found badly leaking). The high-level radwastes, such as spent reactor fuels and wastes from atomic weapons development and production are not buried. These are stored in water in tanks at nuclear plants or at special storage sites. At this time there is no approved method for their permanent disposal for the U. S.

This statement concerns the discharge of low-level liquid radwastes to the Tennessee River and its tributaries and my own radioanalysis of river samples which show high concentrations of fission products by aquatic organisms and bottom sediments in the Tennessee River, particularly into Pickwick Lake. This reservoir would receive more radwastes from the proposed Yellow Creek Nuclear Plant.

Many managers of liquid wastes operate under the assumption that dilution is the solution to pollution. However, many substances do not stay diluted but instead tend to build to high concentrations in sediment fractions and in aquatic food webs by biological magnification. The organisms have not read the impact statements. This phenomenon is particularly the situation for fission products ^{90}strontium and ^{137}cesium, having physical half lives of about 3 decades and variable biological half lives.

My studies at the Oak Ridge National Laboratory and at the R. A. Taft Sanitary Engineering Center in Cincinnati, prior to 1966 and at the University of Alabama since 1967 clearly indicate that many radionuclides from various terrestrial radioactive waste burial sites do move into waterways, such as from the Conasauga shale burial sites at Oak Ridge, Tenn.

These intermediate level wastes from sites such as those at Oak Ridge and low-level liquid radwastes from current operating nuclear power plants of the Tennessee River pose a threat to human health because they can get into humans when their high concentrations following concentration in the waterway are released into public drinking water supplies, following dieoff of dense populations of phytoplankton-zooplankton communities, or from eating fishes with high concentrations of fission products.

Impact statements simply have not addressed this problem. Studies of many people with today's cancers have been recently correlated with low-level exposures 15 to 30 years ago. Cancers from X-radiation in hospitals have payoff benefits, but there are no benefit from drinking, eating, or inhaling radioactive substances from the environment from radwastes.

The kind of radionuclides, such as ^{60}cobalt, uranium, radium, and plutonium, are quite different from the fission products from current nuclear reactors. Their half lives are very long, such as 24,000 years for the most toxic substance on earth PLUTONIUM. The cycling of nuclear waste products in land, water, air, and biomass is very complex, especially when the wastes have been buried with chelating agents, such as EDTA such as the burial sites at Oak Ridge.

Even though the cooling system is "closed" current nuclear plants normally discharge a lot of radwaste water to waterways that contain unwanted radionuclides formed as products of fission of ^{235}uranium and from becoming radioactive following neutron bombardment while a part of the reactor core or the cooling system. The practise of using EDTA chelation for cleaning or decontamination, because of its strong metal-bonding properties, also contributes to the radionuclides becoming more hazardous when they are discharged into public waterways.

I was the senior author of an article published on November 25, 1960, dealing with organic materials as monitoring tools for radionuclides in the public waterways. This article reports on methods developed to detect trace levels of radionuclides.

MORE ON THE REVERSE SIDE

This article in SCIENCE and several others in Limnology & Oceanography and in Ecology and other journals demonstrate methods of analysis of the raw water itself for dissolved radionuclides. In concentrating trace amounts of nuclides from large volumes of sample, particularly where evaporation, precipitation, or ion-exchange techniques are used, the stable salt concentrations in the diluting medium interfere with the subsequent separation of the specific radionuclides. To avoid these difficulties a technique utilizing dead organic and living biological concentrations under natural stream conditions was investigated. Radioanalysis of algae from natural aquatic habitats has shown a greater variety and higher concentration of radionuclides than an analysis of the water in which the algae live. Average concentration factors are about 7000 times, but under ideal or optimum conditions they may concentrate several hundred thousand times.

This technique for working with radionuclides in natural waterways was modified to measure the methylation uptake of low trace mercury in the Tennessee River. **Presently** bottom sediments and ooze deposits in Pickwick Lake are loaded with both nonradioactive mercury, and several fission products. These have an adverse effect on this aquatic ecosystem.

Shortly after the first commercial nuclear power plant went into operation at [illegible] Shipping Port, Pa., on the Ohio River, I was able to detect fission products in the river. This was also done in the Hutson and the Columbia Rivers in the early days of nuclear power development.

The Nuclear Regulatory Commission allows current nuclear plants to dispose of low-level liquid radwastes to rivers, lakes and oceans, but no monitoring of their fate (to my knowledge) is done to determine their fate in the aquatic ecosystem, where many of them become concentrated to hazardous levels to both humans and the aquatic organisms when the ecosystem is distrubed.

A large filamentous green alga, Pithophora, with a high toleration for most freshwater environments, was grown free of silt and interfering radionuclides, packaged into liter-size polyethylene bags, with each bag having 400 evenly spaced pores about [illegible] micrometers in diameter. Phytoplankton was also used, but the small size of the pores, [illegible] micrometers, necessary to retain them, [illegible] rate of water exchange, but [illegible] [illegible], because of the ratio of the [illegible], do [illegible] [illegible].

The proposed Yellow Creek Nuclear Plant would be adding more producers of waste fission products to the Tennessee River, while taking out some of the river and putting it into the atmosphere for cooling a nuclear plant can only magnify a system of too much production of nuclear garbage than the aquatic ecosystems of the Tennessee River and downstream Ohio and Mississippi can bear.

Recent studies by others indicate that about 90 percent of cancers have environmental causes. Should we wait for 10 to 20 years to establish that low-level liquid radwastes will greatly increase the incidence of cancer?

For environmental purposes when dealing with radiological problems the public must be told that we should talk less about radiation and more about radioactive substances that get in the bodies of living organisms where they continually put out ionizing radiation, which should not be compared with small dose of X-radiation, which are of short durations, while radioactive substances inside of organisms have biological half lives that may be of long-term duration.

Ionizing radiations do produce unwanted hereditary changes, which are irreversible and accumulative. There is no threshold below which there is not an effect. Do we have a right to give future generations an environment that will be intolerable? Isn't the problem that mankind is becoming the endangered species? How can we estimate the costs of medical care from cancers and genetic defects? These are not included in impact statements, but they do result in large medical expenses to some people. How can an impact statement quantify the potential cause of cancer and birth defects?

When some flagellate protozoa substitute the fission product, 90strontium for calcium, their motile organelles fail to properly develop and their survival is greatly reduced. Since the advent of fission products in waterways from air test fallout, and nuclear power plants, the diversity of river planktonic organisms has been greatly reduced. How much of this is a result of low-level radwastes?

The Fire at Browns Ferry [illegible]

[illegible]

APPENDIX B

NEPA POPULATION DOSE ASSESSMENT

Population dose commitments are calculated for all individuals living within 50 miles of the facility employing the same models used for individual doses (see Regulatory Guide 1.109 in preparation). In addition, population doses associated with the export of food crops produced within the 50-mile region and the atmospheric and hydrospheric transport of the more mobile effluent species such as noble gases, tritium, and carbon-14 have been considered.

5.B.1 Noble Gas Effluents

For locations within 50 miles of the reactor facility, exposures to these effluents are calculated using the atmospheric dispersion models in Regulatory Guide 1.111 and the dose models described in Section 5.1 and Regulatory Guide 1.109. Beyond 50 miles, and until the effluent reaches the northeastern corner of the United States, it is assumed that all the noble gases are dispersed uniformly in the lowest 1,000 meters of the atmosphere. Decay in transit was also considered. Beyond this point, noble gases having a half-life greater than one year (e.g., Kr-85) were assumed to completely mix in the troposphere of the world with no removal mechanisms operating. Transfer of tropospheric air between the northern and southern hemispheres, although inhibited by wind patterns in the equatorial region, is considered to yield a hemisphere average tropospheric residence time of about two years with respect to hemispheric mixing.

Since this time constant is quite short with respect to the expected midpoint of plant life (15 yrs), mixing in both hemispheres can be assumed for evaluations over the life of the nuclear facility. This additional population dose commitment to the U.S. population was also evaluated.

5.B.2 Iodines and Particulates Released to the Atmosphere

Effluent nuclides in this category deposit onto the ground as the effluent moves downwind, which continuously reduces the concentration remaining in the plume. Within 50 miles of the facility, the deposition model in Regulatory Guide 1.11 was used in conjunction with the dose models in Regulatory Guide 1.109. Site specific data concerning production, transport and consumption of foods within 50 miles of the reactor were used. Beyond 50 miles, the deposition model was extended until no effluent remained in the plume. Excess food not consumed within the 50-mile distance was accounted for, and additional food production and consumption representative of the eastern half of the country was assumed. Doses obtained in this manner were then assumed to be received by the number of individuals living within the direction sector and distance described above. The population density in this sector is taken to be respresentative of the eastern United States, which is about 160 people per square mile.

5.B.3 Carbon-14 and Tritium Released to the Atmosphere

Carbon-14 and tritium were assumed to disperse without deposition in the same manner as Krypton-85 over land. However, they do interact with the oceans. This causes the carbon-14 to be removed with an atmospheric residence time of four to six years with the oceans being the major sink. From this, the equilibrium ratio of the carbon-14 to natural carbon in the atmosphere was determined. This same ratio was then assumed to exist in man so that the dose received by the entire population of the U.S. could be estimated. Tritium was assumed to mix uniformly in the world's hydrosphere, which was assumed to include all the water in the atmosphere and in the upper 70 meters of the oceans. With this model, the equilibrium ratio of tritium to hydrogen in the environment can be calculated. The same ratio was assumed to exist in man, and was used to calculate the population dose, in the same manner as with carbon-14.

5.B.4 Liquid Effluents

Concentrations of effluents in the receiving water within 50 miles of the facility were calculated in the same manner as described above for the Appendix I calculations. No depletion of the nuclides present in the receiving water by deposition on the bottom of the Chickamauga Reservoir was assumed. It was also assumed that aquatic biota concentrate radioactivity in the same manner as was assumed for the Appendix I evaluation. However, food consumption values appropriate for the average individual, rather than the maximum, were used. It was assumed that all the sport and commercial fish and shellfish caught within the 50 mile area were eaten by the U.S. population.

Beyond 50 miles, it was assumed that all the liquid effluent nuclides except tritium have deposited on the sediments to make no further contribution to population exposures. The tritium was assumed to mix uniformly in the world's hydrosphere and to result in an exposure to the U.S. population in the same manner as discussed for tritium in gaseous effluents.

APPENDIX C

AQUATIC BIOTA

Characteristics of the site aquatic ecology have been described in TVA's FES-CP.[1] More recent data obtained through preoperational monitoring and supplemental information requested from TVA are presented herein to the extent that this new information alters the earlier description of the site ecology.[2,3,4] Pertinent new information has been presented for primary production, zooplankton, benthos, ichthyoplankton, and fishes. Evaluations of construction and potential operational impacts on these aquatic resources are presented in Section 4.3.2 and Section 5.4.2, respectively. Information pertinent to these evaluations is summarized in Section 2.5.2.

Primary Production - Phytoplankton Enumeration and Composition Analysis

The phytoplankton community at the Watts Bar site had been described in the FES-CP as extrapolated from limited sampling at the Watts Bar Dam forebay and downstream of the site. The preoperational monitoring program, which was implemented in February 1973, includes quarterly sampling and analysis of phytoplankton at seven stations (see Figure C.1), i.e., TRM (Tennessee River Mile) 496.5, TRM 506.6, TRM 518.0, TRM 527.4 (0.3 mile downstream of diffuser location), TRM 528.0 (intake area), TRM 529.9 (Watts Bar Dam tailrace) and TRM 532.1 (Watts Bar Dam forebay). At each station, collections were made at a minimum of three depths (see Table C.1). The following summary is based on four years (1973-1976) of phytoplankton collections. See Table C.2 for a list of genera identified in the four years of collections.

Of the 27 genera of Chrysophyta identified, the greater diversity (i.e., 14 different genera) was found at the TRM 496.5 station during the 1976 winter collection. In contrast, only one genera (Melosira spp.) was identified at the TRM 529.9 station during the 1975 winter collection. The average number of different genera for all stations and years was highest during winter (~8) and lowest during fall (~6). The genus, Melosira, was found at all stations during all seasons throughout the four-year period. Other ubiquitous genera, in descending frequency of occurrence, were Synedra, Navicula and Stephanodiscus.

Concentrations (number per liter) of Chrysophyta generally increased moving upstream. The lowest reported was 54,000 per liter at TRM 496.5 during fall 1975 and the highest 2.3 million per liter at TRM 528.0 during winter 1976. Melosira was, in general, the dominant in concentration, followed by Synedra. Fragilaria dominated the summer 1975 collection at the Dam forebay station (TRM 532.1). Seasonally, the average concentration of Chrysophyta is greatest (~723,000 per liter) in the winter and least(~251,000) in the fall. See Table C.3 for a summary of the Chrysophyta diversities and concentrations during the four-year sampling period.

Of the 51 genera of Chlorophyta identified (Table C.2), the greatest diversity (i.e., 33 different genera) was found at TRM 496.5 during the summer 1976 collections. (See Table C.4 for a summary of the Chlorophyta data.) Only one taxon was identified at TRM 496.5 and TRM 532.1 during the winter 1973 and at TRM 506.6 during fall 1974; Scenedesmus spp. was identified at the first station and Chlamydomonas spp. at the latter two stations. The average number of different genera for all stations and years was highest during the summer (~20) and least during the winter (~7). Spring and fall average diversities were similar (~8 to 9); however, diversities for these two seasons were high at some stations (e.g., 15 genera at TRM 528 in spring 1975 and 18 genera at both TRM 527.4 and 532.1 in fall 1975). Average diversity at TRM 528.0 and TRM 532.1 are highest (~12+). Scenedesmus and Chlamydomonas were identified at nearly all stations and seasons for the four-year period. Other taxa frequently occurring at certain stations were Dictyosphaerium spp., Chlorella spp. and Pandorina spp.

Concentrations (number per liter) of Chlorophyta generally increased from TRM 496.5 (last station downstream) to the dam forebay station at TRM 532.1. At the forebay station, average concentration exceeded that of the other six stations by factors of 1.6 to 2.8; however, the range of variation was also greatest at the dam forebay, i.e., from 2000 cells per liter during winter 1973 collections to 1.9 million cells per liter during the summer 1975 collections. Seasonally, the average concentrations of Chlorophyta is greatest (~655,000 per liter) during the summer and least (~71,000 per liter) during the winter. Scenedesmus spp. frequently

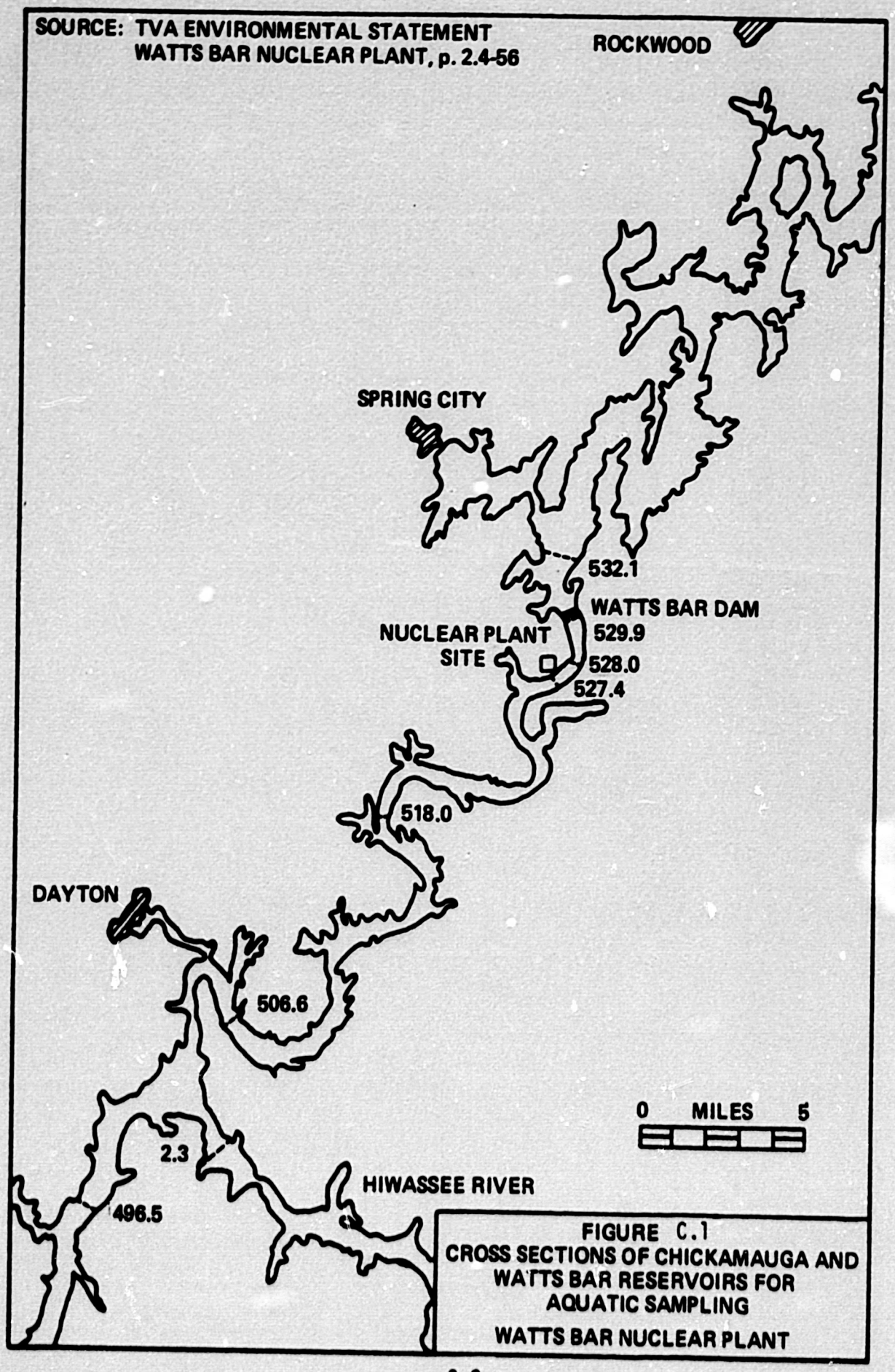

FIGURE C.1
CROSS SECTIONS OF CHICKAMAUGA AND WATTS BAR RESERVOIRS FOR AQUATIC SAMPLING

WATTS BAR NUCLEAR PLANT

Table C.1

Summary of Quarterly Preoperational Aquatic (Nonfish) Monitoring Program (Nonradiological)

Watts Bar Nuclear Plant

Station or TRM	Horizontal Location[1]	Depths Sampled for Chlorophyll, Phytoplankton, & Carbon-14 (meters)[2]	Zooplankton Vertical Tows from Bottom to Surface (duplicate tows)	Artificial Benthos Substrates Colonization Period 3 mths (No. Baskets Set/Sta.)	Periphyton Autotrophic-Heterotrophic Indices and Enumeration Colonization Period 1 mth (No. Racks Set/Sta.)[3]
532.1	R-LM	0,1,3,5	X	3	2
529.9[4]	R-LM	0,1,3,5	X	3	2
528.0[5]	R-LM	0,1,3,5	X	3	2
527.4	R-LM	0,1,3,5	X	3	2
518.0	R-LM	0,1,3,5	X	3	2
506.6	R-LM	0,1,3,5	X	3	2
496.5	R-LM	0,1,3,5	X	3	2
527.7-528.2				X[5]	
520.5-521.3				X[5]	

1/ Horizontal location looking downstream; R-LM = area from right shore to left middle of stream

2/ These depths sampled if applicable; otherwise, surface, middle, and near bottom

3/ Five plexiglas plates per rack - approximate colonization period one month

4/ Tailrace

5/ Mussel bed investigations by SCUBA divers initiated in 1975

NOTE: This program reflects the program underway as of September 1976. However, the complete program is subject to periodic review and revision.

Table C.2
PHYTOPLANKTON GENERA IDENTIFIED IN
TENNESSEE RIVER COLLECTION NEAR WATTS BAR NUCLEAR PLANT
1973 - 1976

CHRYSOPHYTA

Achnanthes
Asterionella
Attheya
Chaetoceros
Cocconeis
Cyclotella
Cymbella
Diatoma
Dinobryon
Eunotia
Fragilaria
Gomphonema
Gyrosigma
Mallomonas
Melosira
Meridion
Navicula
Nitzschia
Pinnularia
Pleurosigma
Rhoicosphenia
Rhizosolenia
Stephanodiscus
Surirella
Synedra
Synura
Tabellaria

CHLOROPHYTA

Acanthosphaera
Actinastrum
Ankistrodesmus
Arthrodesmus
Botryococcus
Carteria
Chlamydomonas
Chlorella
Chlorococcum
Chlorogonium
Chodatella
Cladophora
Closteriopsis
Closterium
Coelastrum
Cosmarium
Crucigenia
Dactylococcus
Dictyosphaerium
Elakatothrix
Euastrum
Eudorina
Franceia
Gloeoactinium
Gloeocystis
Golenkinia
Gonium
Kirchneriella
Micractinium
Mougeotia
Oöcystis
Pandorina
Pediastrum
Planktospaheria
Platydorina
Pleodorina
Protococcus
Pteromonas
Quadrigula
Scenedesmus
Schroederia
Selenastrum
Sphaerocystis
Staurastrum
Tetradesmus
Tetraëdron
Tetraspora
Tetrastrum
Treubaria
Trochiscia
Ulothrix

CYANOPHYTA

Anabaena
Anacystis
Aphanothece
Calothrix
Chroococcus
Ceolosphaerium
Cylindrospermum
Dactylococcopsis
Eucapsis
Gloeothece
Gomphosphaeria
Lyngbya
Merismopedia
Microcystis
Oscillatoria
Phormidium
Rhabdoderma

EUGLENOPHYTA

Cryptoglena
Euglena
Phacus
Trachelomonas

PYRROPHYTA

Ceratium
Glenodinium
Gymnodinium
Peridinium

Table C.3
Summary of Chrysophyta Data
Preoperational Monitoring - Watts Bar Nuclear Plant

Station (TRM)	Year	Winter No. of Genera	Winter Concentration (1000's/liter)	Spring No. of Genera	Spring Concentration (1000's/liter)	Summer No. of Genera	Summer Concentration (1000's/liter)	Fall No. of Genera	Fall Concentration (1000's/liter)	Station Average (Three Years Combined) No. of Genera	Station Average (Three Years Combined) Concentration (1000's/liter)
496.5	1973	5	560	9	410	6	207	7	119	7.4	342
"	1974	6	67	6	348	6	130	5	85		
"	1975	5	274	8	319	10	318	5	54		
"	1976	14	1993	10	229	10	240	7	117		
506.6	1973	12	731	9	282	5	204	5	76	6.6	332
"	1974	6	69	7	368	7	79	3	105		
"	1975	5	81	5	295	5	182	5	57		
"	1976	10	2157	4	61	11	333	6	237		
518.0	1973	9	749	8	426	8	523	4	135	6.6	407
"	1974	6	90	8	466	6	108	3	224		
"	1975	5	99	7	736	4	105	4	100		
"	1976	12	1668	5	129	8	575	8	376		
527.4	1973	9	517	9	777	6	677	4	206	6.9	559
"	1974	7	142	11	712	4	266	5	373		
"	1975	5	176	6	1,438	4	218	5	183		
"	1976	13	1775	5	189	8	807	9	491		
528.0	1973	13	624	8	613	5	823	5	277	6.5	619
"	1974	6	219	9	778	5	394	6	407		
"	1975	5	161	7	1,347	4	252	4	145		
"	1976	7	2307	6	257	7	827	7	468		
529.9	1973	10	680	11	643	7	701	9	273	6.8	600
"	1974	6	129	7	901	5	245	6	350		
"	1975	1	173	6	1,197	3	241	4	181		
"	1976	11	2202	7	264	7	873	8	540		
532.1	1973	8	423	10	1,019	8	941	4	328	6.9	736
"	1974	6	133	8	1,126	7	712	7	400		
"	1975	5	110	5	1,389	4	1,000	4	130		
"	1976	10	1928	8	289	9	1,253	7	598		
Seasonal averages (Stations Combined)		7.8	723	7.5	607	6.4	473	5.6	251		

Table C.4
Summary of Chlorophyta Data
Preoperational Monitoring - Watts Bar Nuclear Plant

Station (TRM)	Year	Winter		Spring		Summer		Fall		Station Average (Four Years Combined)	
		No. of Genera	Concentration (1000's/liter)	No. of Genera	Concentration (1000's/liter)	No. of Genera	Concentration (1000's/liter)	No. of Genera	Concentration (1000's/liter)	No. of Genera	Concentration (1000's/liter)
496.5	1973	1	5	6	77	14	252	8	61	11.1	149
	1974	5	28	14	247	10	101	3	32	-	-
	1975	7	51	10	82	24	483	10	71	-	-
	1976	7	71	14	172	33	541	12	109	-	-
506.6	1973	7	242	5	44	16	439	5	42	9.9	157
	1974	4	25	6	91	6	60	1	23	-	-
	1975	10	110	8	44	23	400	13	67	-	-
	1976	14	37	6	39	31	843	3	13	-	-
518.0	1973	6	177	5	74	18	781	8	65	9.9	185
	1974	3	23	8	76	8	85	4	65	-	-
	1975	7	59	9	68	22	333	12	115	-	-
	1976	11	78	2	8	30	907	5	41	-	-
527.4	1973	5	58	3	44	17	854	8	125	10.9	237
	1974	3	70	7	118	10	205	6	115	-	-
	1975	7	75	12	201	20	269	18	183	-	-
	1976	14	107	7	44	31	1271	7	49	-	-
528.0	1973	4	47	5	70	21	1094	9	151	12.1	271
	1974	3	26	10	145	14	251	7	111	-	-
	1975	9	73	15	227	27	463	11	116	-	-
	1976	16	177	6	87	29	1188	8	110	-	-
529.7	1973	5	96	5	68	17	874	8	138	10.6	230
	1974	6	35	7	168	9	102	5	72	-	-
	1975	9	61	12	166	22	365	15	174	-	-
	1976	13	93	5	95	26	1047	6	131	-	-
532.1	1973	1	2	6	279	19	1211	11	168	12.1	425
	1974	6	44	11	233	15	389	5	92	-	-
	1975	5	32	14	238	27	1900	18	205	-	-
	1976	11	95	5	88	29	1635	10	194	-	-
Seasonal averages (Stations Combined)		7.1	71	8.0	118	20.3	655	8.4	101		

dominated the Chlorophyta collections. For some stations and seasons, Chlamydomonas, Ulothrix, Dictyosphaerium, Pediastrum, Coelastrum and Eudorina either dominated or made up a large proportion of the total. The peak concentration at TRM 532.1 during summer 1975 was dominated by Dictyosphaerium (15.4%), Coelastrum (12.6%) and Pediastrum (11.8%).

Of the 17 genera of Cyanophyta identified (Table C.2) the greatest diversity (i.e., 10 different genera) was found at TRM 496.5 during summer 1976. Only one genera was found at several stations as shown by Table C.5. Diversity was highest during the summer and lowest during the winter. Dactylococopsis spp. was present at all stations for all seasons during the four-year period.

Average concentration of Cyanophytes increased moving upstream, and was highest at the dam forebay during summer 1976 (~13.3 million cells per liter). The seasonal average was highest for the summer (~1.8 million per liter) and lowest for the winter (~53,000 per liter). Dactylococopsis or Anacystis spp. most frequently dominated the collections of blue-greens.

Four genera of Euglenophyta and four genera of Pyrrophyta were identified in the 1973-1976 collections. Of the total phytoplankton community, the Pyrrophyta contributed less than 2% at any station during the 1975-76 collections; the highest percent contribution was during the winter and the highest concentration was during the summer. The percent contribution of the euglenophytes was greater for 1975 than for the other three years, making up 10.3% of the average phytoplankton concentration during the winter collections. The highest concentration (~44,000 cells per liter) was found at the tailrace station (TRM 529.9). Euglena spp. was the dominant genera found in all collections of Euglenophytes.

The average concentrations of the total phytoplankton community are summarized by station, season, and year in Table C.6. By this presentation of the phytoplankton data, the trend of increasing productivity from the downstream to the upstream stations is reiterated. The higher productivity of the reservoir habitat, as shown by the dam forebay station average, is as expected. The stations downstream of the Watts Bar Dam exhibit taxa of reservoir origin and taxa to be expected in riverine habitats, as well as epiphytic and periphytic taxa which have become detached and suspended by the turbulent flow in the tailrace stretch of the river. The composition of the phytoplankton community suggests a condition of good water quality; however, the concentrations and percent contribution of blue-greens showed marked increases in the summer 1976 collections. The blue-greens (Cyanophyta), which are considered a nuisance at high concentrations, contributed 71.7% to 82.1% of the total phytoplankton community during the summer 1976 period. The greatest concentration of blue-greens recorded was 13.3 million per liter at the dam forebay during the summer 1976 collection, making up 82% of the total. In the case of nuisance blue-green blooms, a concentration of billions of cells per liter might be expected. Large variations in the phytoplankton community are to be expected due to the dynamics of the system. Conditions in Watts Bar Reservoir will largely influence the character of the phytoplankton community at the plant site.

Primary Production - Chlorophyll a and Carbon-14 Analysis

To complement the phytoplankton enumeration, standing stock estimates and production rates have been made using Chlorophyll a (Chl a) extractions and Carbon-14 uptake, respectively. Chlorophyll a concentrations (Table C.7) show the same trend of increasing production moving upstream. However, the seasonal averages obtained by combining stations and years are somewhat different than that seen in the numerical concentrations. The highest standing stock is indicated for the fall season (17.0 mg Chl a/m^2), followed by summer (15.3), winter (13.74) and spring (10.33). The production rates using Carbon-14 uptake measurements (Table C.8) compare more favorably with the results of the phytoplankton enumeration, showing both the production rates increasing upstream of the TRM 496.5 station and similar seasonal trends, i.e., highest in summer (657 mg C/day/m^2) and lowest in winter (127 mg C/day/m^2).

Secondary Production - Zooplankton

The zooplankton community at the Watts Bar site had been described in the FES-CP as extrapolated from limited sampling at the Watts Bar Dam forebay. Preoperational monitoring, implemented in February 1973, includes quarterly sampling of zooplankton at the same stations as in the phytoplankton studies. At each station, duplicate tows were made from bottom to the surface using a 1/2-meter net with No. 20-mesh bolting cloth. The following discussion is based on three years of zooplankton collections. See Table C.9 for list of taxa identified in the collections of zooplankton.

Table C.5
Summary of Cyanophyta Data
Preoperational Monitoring - Watts Bar Nuclear Plant

Station (TRM)	Year	Winter No. of Genera	Winter Concentration (1000's/liter)	Spring No. of Genera	Spring Concentration (1000's/liter)	Summer No. of Genera	Summer Concentration (1000's/liter)	Fall No. of Genera	Fall Concentration (1000's/liter)	Station Average (Four Years Combined) No. of Genera	Station Average (Four Years Combined) Concentration (1000's/liter)
496.5	1973	1	18	1	27	3	76	1	7	3.3	313
	1974	1	1	1	35	3	29	2	4		
	1975	2	16	3	39	6	424	2	18		
	1976	4	164	7	217	10	3,704	6	229		
506.6	1973	1	44	1	8	3	224	1	8	2.8	249
	1974	1	5	1	14	2	7	2	2		
	1975	2	36	4	62	5	216	5	140		
	1976	3	170	3	29	7	3,001	3	11		
518.0	1973	2	43	1	25	3	483	1	13	2.9	399
	1974	1	2	2	48	2	2	2	14		
	1975	1	18	4	165	7	366	5	90		
	1976	3	210	2	5	8	4,845	3	52		
527.4	1973	1	38	1	12	4	650	1	12	2.5	456
	1974	1	7	1	30	2	4	2	21		
	1975	1	38	3	218	5	183	3	80		
	1976	2	23	2	25	8	5,911	3	44		
528.0	1973	1	20	1	14	4	998	1	13	3.2	558
	1974	1	12	2	41	2	2	2	14		
	1975	2	35	4	475	7	696	4	86		
	1976	4	139	4	23	9	6,064	4	291		
529.9	1973	1	44	1	12	4	929	1	34	2.6	471
	1974	1	9	1	38	2	2	2	23		
	1975	1	20	4	386	5	208	2	24		
	1976	3	87	1	2	9	5,672	4	44		
532.1	1973	1	24	1	33	4	1,033	1	29	3.0	1028
	1974	1	9	1	21	2	16	2	25		
	1975	1	13	5	93	9	1,386	4	79		
	1976	3	230	2	5	8	13,341	3	118		
Seasonal averages (Stations Combined)		1.6	53	2.3	75	5.1	1802	2.6	54		