APPENDIX E

Effect of Nonsymmetric Thermal Loading on Shell

INTRODUCTION

This analysis has been performed to determine the stresses in the vessel due to the nonsymmetric thermal loading as prescribed in the TVA Specification for the Watts Bar Containment Vessel.

The shell temperature transients have been specified in Appendix C of the specification and represent average shell temperatures adjacent to the three compartments as a function of time after the design basis accident occurs.

The thermal stress analysis of the containment vessel is made using CBI computer program 781 which performs a linear analysis for any axisymmetric thin shell structure subjected to an arbitrary nonsymmetric loading.

The program considers that the distribution of the ambient temperature through the thickness of the shell is a linear variation. In this analysis it is assumed that no thermal gradient exists through the shell thickness.

In our analysis it is assumed that the ambient temperature at which the vessel was fabricated represents the initial condition. This reference temperature is taken as $T_1 = 70^oF$.

At time t = 1000 secs. after the design basis accident, the change in the ambient temperature from T_1 (70^oF) to T_2 (the average shell temperature for different compartments) is completed and it is assumed that this temperature remains constant. There is, however, a temperature distribution which exists both axially along the shell meridian at the elevation of the compartment "dividers" and circumferentially at boundaries between the compartments.

The program calculates stresses and deflections in the vessel due to the nonsymmetric temperature variation around the shell.

DESCRIPTION OF COMPUTER MODEL

The vessel has been idealized as an axisymmetric thin shell. The basic structural components are the vertical cylinder, hemispherical dome and circumferential stiffeners (Figure 1). The circumferential ring stiffener is considered as a cylinder of length "t_1" and thickness "b_1", (Figure 2). The stiffness of the ring out of its plane is assumed to be negligible.

The vertical stringers are accounted for in the analysis by use of an equivalent orthotropic layer described by an equivalent stiffness in the merdional direction and zero circumferential stiffness. The bending stiffness of the model is made equal to that of the actual structure by equating the stiffnesses EI

$$\bar{E}_\alpha \left\{ \frac{ad^3}{12} + ad\left(\frac{d}{2}\right)^2 \right\} = E_\alpha \left\{ \frac{bd^3}{12} + bd\left(\frac{d}{2}\right)^2 \right\}$$

where,

$\bar{E}_\alpha$ = modulus of elasticity of orthotropic layer

E_α = modulus of elasticity of actual structure at pertinent ambient temperature

a = average spacing of gussets

b = thickness of the vertical stringers

d = depth of vertical stringers

The above equation can be simplified to the form

E $\quad \bar{E}_\alpha = E_\alpha \times \left(\frac{b}{a}\right)$

The model consists of a total of 32 parts including 12 circumferential stiffeners and 20 shell panels.

Influence coefficients for the top crown region of the hemispherical head (as illustrated in Figure 3) which is not considered in the model are defined in the form of spring matrices at the end of the model. The stiffness matrices for the various harmonics are shown on page 15.

For the purpose of this analysis, the vessel is divided into three regions. The "Lower Compartment Region" extends from the embedment (elev. 702' - 9 3/8") to elev. 744' 6" which corresponds approximately to the elevation of the top surface of the vapor barrier between the ice condenser compartment and lower compartment (refer Figure 4).

The "Ice Condenser Region" is the region along shell meridian from elev. 744' 6" to elev. 805' 0" which is about 2' above the top of the ice bed (Figure 4).

The "Upper Compartment Region" comprises the cylindrical shell above elev. 805' 0" and spherical segment of the top head up to an angle equal to 40° from the spring line of the top head.

NONAXISYMMETRIC THERMAL LOAD REPRESENTATION

The temperature of the shell adjacent to the Ice Condenser is 53°F at time t = 1000 secs. The temperature of the shell adjacent to the Upper and Lower compartment are 140°F and 220°F respectively at t = 1000 sec. (Refer to Figure C-2 Appendix C of TVA Specification).

TEMPERATURE DISTRIBUTION IN LOWER COMPARTMENT REGION

Now since the lower compartment region is continuous around the complete periphery of the vessel from embedment to elev. 708' 0", the circumferential temperature distribution is taken as uniform in this region. The axial distribution of temperature in this region is determined from Figure C-1 of the TVA Specification. The shell temperature is taken as 80°F at embedment, increasing to 94°F over a height of 3' 9" (Elev. 706' 6"). Then a steep

rise in temperature from 94°F to 220°F occurs over the next 18" (Elev. 708' 0").

From elevation 708' to elevation 744' 6" the upper compartment extends over an arc region of 60° whilst the lower compartment extends over the remaining shell region (Azimuth 30° to 330°).

Hence in this region the distribution of temperature in the circumferential direction is nonsymmetric, 140°F from Azimuth 330° to 30° and 220°F from Az. 30° to 330°. This nonsymmetric temperature distribution is represented in the form of a Fourier cosine series using 9 terms as shown in figure 5 on page 13. Fourier coefficients for the 9 harmonics used to depict this temperature variation are shown on page 15.

The temperature distribution along the shell meridian in this region changes at two locations; one, in the vicinity of elevation 708' and the other is at the elevation where the ice condenser compartment barrier is situated (elev. 744'6"). The temperature change in the meridional direction at elev. 708' from 220°F to 140°F is assumed to occur over a distance of 6'. The temperature change in the axial direction at the elevation of the ice condenser barrier is assumed to take place over a distance of 18" (from elev. 743' to 744'6"), from 220°F in the lower compartment region to 53°F in the ice condenser region.

TEMPERATURE DISTRIBUTION IN ICE CONDENSER REGION

The temperature distribution for the shell in the ice condenser region is also nonsymmetric, 140°F from Azimuth 330° to 30° and 53°F from Azimuth 30° to 330°. This nonsymmetric temperature distribution is also represented in the form of Fourier cosine series as shown in Figure 6 and the Fourier coefficients

are as shown on page 15. This nonsymmetric temperature distribution extends into the Upper Compartment region for a distance of 6' up to elev. 811' which is about 8' above the top of ice bed. The shell above elevation 811' is assumed to be at a uniform temperature of 140°F around the complete circumference.

RESULTS

The numerical results of the analysis are presented in the form of plots. The plots are for the stresses and deformations along the shell meridian and also around the circumference (Azimuth 0° - 180°) at several pertinent locations.

The plots along the shell meridian are for the "Lower Compartment" region (origin at embedment) up to elevation 744'-6" plotted to a vertical height of 9" and also for the "Ice Condenser Region" (origin at elev. 744'-6") and extending to elevation 811'-0" plotted also to a vertical dimension of 9". Stresses are shown along the shell meridian at Azimuths 0°, 30°, 45°, 60° and 90°.

Stresses are also shown around the circumference of the shell (0° - 180° plotted to a dimension of 9") at several pertinent locations. The locations considered are the embedment elevation (702' - 9-3/8"), Elev. 708', elev. 719'-3-5/8" (centerline of lower personnel lock), elev. 743', elev. 744.5' (elevation at which ice condenser region starts), elev. of centerline of upper personnel lock (760' - 3-5/8"), elevation of centerline of equipment door (764' - 7-1/2") and elevation 805' (2' above top of ice bed).

Radial (normal to shell) displacement and longitudinal rotation as well as in-plane displacements (meridional and circumferential) are plotted for the two regions along the shell meridian for azimuths 0 and 30 degrees only. These deformations are also

plotted around the shell circumference at embedment level, centerline of locks and equipment door and at the end of the ice condenser region (elev. 805'-0").

At the bottom of each page, the maximum value of each variable which is plotted on that page is printed. The plots on any page are plotted to a scale based on making the max. value of the first variable printed at the bottom of the page equal to a dimension of 4" from the base line. If for any other plot on that page, this scale results in the maximum ordinate to exceed 4" then the scale for that plot is adjusted so that the max. ordinate is 4". Positive (tensile) values of the vectors (stresses and deformations) are plotted to the left of the base line while negative (compressive) values are to the right.

The stresses are plotted at the midsurface of the vessel wall (identifying symbol 0 on curve) and the inside (Δ) and outside surface ( ) of the shell. For the stress curves, the first, second and third values at the bottom of the page represent the maximum values for the inside surface, membrane and outside surface stress respectively.

The maximum longitudinal stress occurs in the region where the ice condenser compartment "barrier" is situated just below Elev. 744'6". The maximum values are 23175 psi (tension) on inside face and 22000 psi (comp.) on the outside face. The maximum longitudinal stresses at the embedment level are 17800 psi (tension) on outer surface and 16350 on inside surface.

The maximum circumferential stress also occurs in the ice condenser compartment "barrier" region just above Elev. 743'0". The maximum values are 15612 psi on inside and 14700 psi on outside, both compression. The maximum tensile circumferential stress occurs at about 2' above embedment. Its value is about 15400 psi on inside and outside face.

In the ice condenser region the stresses (both meridional and circumferential) are rather nominal. The maximum meridional stress is of the order of 15000 psi (tension) on the outside face. The maximum circumferential stress is of the order of 9200 psi (tension) on the inside face and 5300 psi (compression) on the outside face. These stresses occur at Elevation 744'6" which corresponds to the elevation where the ice condenser region starts.

Since the stresses due to temperature are less than 1½ Sm then the stresses due to the combined loads will be less than the allowable 3 Sm.

TENNESSEE VALLEY AUTHORITY
CHATTANOOGA, TENNESSEE 37401
400 Chestnut Street Tower II

Watts Bar
Buckling

February 19, 1980

Director of Nuclear Reactor Regulation
Attention: Mr. L. S. Rubenstein, Acting Chief
Light Water Reactors Branch No. 4
Division of Project Management
U.S. Nuclear Regulatory Commission
Washington, DC 20555

Dear Mr. Rubenstein:

In the Matter of the Application of	)	Docket Nos. 50-390
Tennessee Valley Authority	)	50-391

On June 14-15, 1979, there was a meeting between TVA and the NRC on the Watts Bar Nuclear Plant containment buckling criteria. At this meeting with A. Hafiz and R. Lapinski of the NRC and NRC consultants Dr. Seide and Dr. Weingarten, TVA employees discussed additional requests for information which TVA received informally on May 14, 1979.

Enclosed are 40 copies of TVA's response to the requests for additional information as a result of this meeting.

Very truly yours,

TENNESSEE VALLEY AUTHORITY

L. M. Mills, Manager
Nuclear Regulation and Safety

Enclosure (40)

Appendix D

INTERNATIONAL STRUCTURAL
ENGINEERS, INC.
P. O. BOX 9505
GLENDALE, CALIF. 91206 U.S.A.

April 9, 1979

Dr. A. Hafiz
U. S. Nuclear Regulatory Commission
Office of Nuclear Regulation
Washington, D. C. 20555

Re: Contract No. NRC-03-79-124

Dear Dr. Hafiz:

After a review of the supplied information, it is apparent that more information is needed. Enclosed is a detailed list of these questions.

Please, as soon as possible supply us with the responses to these questions.

Sincerely,

Bengt A. Mossberg
Contract Administrator

BM:jk
Encls.

Preliminary Review of

EVALUATION OF THE BUCKLING STRESS CRITERIA FOR
THE STEEL CONTAINMENT OF WATTS BAR

Ref. NRC 20-79-03-07-1
Fin. No. B-6581

The buckling design criteria report (Appendix 3.8B and Section 3.8.2) of the Watts Bar/FSAR has been studied. It was apparent from the study that the report does not contain enough information for proper evaluation. It is therefore requested that the following information be supplied:

1. Description of the exact applied loads used in the buckling analysis. If any computer programs were used to obtain these loads, a complete description of the computer program should be supplied. This description should include a discussion of the analytical and numerical methods used in the program.

2. Description of how the buckling curves contained in the report were applied to the buckling of the containment vessel. The description should include the application of these buckling curves to asymmetric dynamic loads in the areas where penetrations are present.

3. In-depth description of all computer programs used in the buckling analysis.

4. Description of what containment vessel modeling assumptions were made in order to use these programs. This description should include a discussion of any convergence and/or accuracy checks that were made.

5. Complete step-by-step description of which and how the buckling stress criteria was applied.

6. Explain the justification of using lumped mass beam model instead of a shell model for the dynamic seismic analysis.

7. Explain the justification for using an axisymmetric geometry computer program for the containment vessel.

8. Description of the buckling check, mass matrix formulation and how the maximums at each time point were chosen in the CBI containment shell analysis finite element model.

9. Explain in detail the criteria and its justification for determining the interaction effects between the containment shell and attached equipment.

10. Was a thermal buckling analysis conducted? If the answer is yes, describe step-by-step the procedure that was followed.

The study of the buckling stress criteria will be completed after the requested information is received.

During this study, additional, clarifying information may be requested.

Appendix E

APPENDIX 3.8B BUCKLING STRESS CRITERIA

TABLE OF CONTENTS

Section	Title	Page
1.	Introduction	3.8B-1
2.	Shells Stiffened With Circumferential Stiffness	3.8B-1
2.1	Circular Cylindrical Shells under Axial Compression	3.8B-1
2.2	Circular Cylindrical Shells in Circumferential Compression	3.8B-2
2.3	Circular Cylindrical Shells Under Torsion	3.8B-2
2.4	Circular Cylindrical Shells Under Bending	3.8B-3
2.5	Circular Cylindrical Shells Under Combined Loads	3.8B-3
3.	Shells Stiffened with A Combination fo Circumferential and Vertical Stiffness	3.8B-5
4.	Spherical Shells	3.8B-7
5.	Factor of Safety	3.8B-8

LIST OF TABLES

Number	Title	Page
3.8B-1	Multiple-Load Combinations for Various Plant Conditions	3.8B-9
3.8B-2	Allowable Stress Intensities Plus Buckling Factor of Safety	3.8B-10

LIST OF FIGURES

Number	Title
3.8B-1	Buckling-Stress Coefficient, Cc, For Unstiffened Unpressurized Circular Cylinders Subjected to Axial Compression
3.8B-2	Increase in Axial-Compressive Buckling-Stress Coefficient of Cylinders Due to Internal Pressure
3.8B-3	Buckling Coefficients for Circular Cylinders Subjected to External Pressure
3.8B-4	Buckling-Stress Coefficients, C_B, For Unstiffened Unpressurized Circular Cylinders Subjected to Torsion
3.8B-5	Increase in Torsional Buckling-Stress Coefficient of Cylinders Due to Internal Pressure
3.8B-6	Buckling-Stress Coefficient, C_B, for Unstiffened Unpressurized Circular Cylinders Subjected to Bending
3.8B-7	Increase in Bending Buckling-Stress Coefficient of Cylinders Due to Internal Pressure
3.8B-8	Buckling-Stress Coefficient, K_c, for Unpressurized Curved Panels Subjected to Axial Compression
3.8B-9	Buckling-Stress Coefficient, K_s, for Unpressurized Curved Panels Subjected to Shear
3.8B-10	Buckling Stress Coefficient, K_s, for Unpressuried Curved Panels Subjected to Shear

1. Introduction

The buckling design criteria in this appendix is applicable to stiffened circular cylindrical and spherical shells. Section 2 sets forth the buckling design criteria for Shells Stiffened with Circumferential Stiffeners. Because of existing penetrations, interferences, or large attached masses, it may be expedient to further analyze some areas of the vessel as independent panels. Section 3 sets forth the criteria for shells stiffened with a combination of circumferential and vertical stiffeners. Section 4 deals with the criteria for a spherical dome. The procedures and data presented were adapted primarily from Chapter 3, Shell Analysis Manual, by E. H. Baker, A. P. Cappelli, L. Kovalevsky, F. L. Rish, and R. M. Verette, National Aeronautics and Space Administration, Washington, D.C., Contractor Report CR-912, April 1968. The criteria given in this Section covers only the range of variables needed for the structural steel containment vessel for which these specifications were prepared.

The buckling criteria is specified in terms of unit stresses and and membrane forces in the shell. Stresses caused by multiple loads must be combined according to provisions of Table 3.8B-1 for use in this criteria. The values of the load factors and factors of safety used in the buckling criteria are given in Section 5. The method of applying the factors of safety to the criteria is also covered in this appendix.

2.0 SHELLS STIFFENED WITH CIRCUMFERENTIAL STIFFENERS

2.1 Circular Cylindrical Shells Under Axial Compression

The critical buckling stress for a cylinder under axial compression alone is determined by the equation

$$\sigma_{cr}^{(1)} = \frac{C_c E t}{R}$$

for various ranges of cylinder length defined by

$$Z = \frac{L^2}{Rt}\sqrt{1-\mu^2}$$

The constant C_c is determined from Figure 3.8B-1 for the appropriate value of R/t.

The critical buckling stress in a cylinder under axial compression and internal pressure is determined by:

$$\sigma_{cr}^{(1)} = (C_c + - C_c) \frac{Et}{R}$$

The constants C_c and AC_c are determined from Figures 3.8B-1 and 3.8B-2, respectively. The constant AC_c given in Figure 3.8B-2 depends only upon the internal pressure P and R/Et.

2.2 CIRCULAR CYLINDRICAL SHELLS IN CIRCUMFERENTIAL COMPRESSION

A circular cylindrical shell under a critical external radial or hydrostatic pressure will buckle in circumferential compression. The critical circumferential compressive stress is given by:

$$\sigma_{cr}^{(2)} = \frac{K_p \pi^2 E}{12(1-\mu^2)} \left(\frac{t}{L}\right)^2$$

for various values of Z given in Section 2.1. Curves for determining the constank K_p for both radial and hydrostatic pressure are given in Figure 3.8B-3.

2.3 CIRCULAR CYLINDRICAL SHELLS UNDER TORSION

The shear buckling stress of the cylinder subject to torsional loads is given by:

$$\sigma_{cr}^{(3)} = C_s \frac{Et}{RZ^{1/4}}$$

The shear buckling stress of the cylinder subject to torsion an internal pressure is determined by

$$\sigma_{cr}^{(3)} = (C_s + \Delta C_s) \frac{Et}{RZ^{1/4}}$$

where constants C_s and ΔC_s are determined from Figures 3.8B-4 and 3.8B-5. Values of ΔC_s are given for internal radial pressure alone and internal pressure plus an external load equal to the longitudinal force produced by the internal pressure.

Figure 3.8B-4 is applicable for values of

$$Z = \frac{L^2}{Rt} \sqrt{1-\mu^2} > 100$$

THIS PAGE IS INTENTIONALLY LEFT BLANK

Note that

$$R_n = \frac{N_1^{(n)} F_1}{\sigma_{cr}^{(n)} t} + \frac{N_2^{(n)} F_2}{\sigma_{cr}^{(n)} t} + \cdots \frac{N_m^{(n)} F_m}{\sigma_{cr}^{(n)} t} \cdots \frac{N_k^{(n)} F_k}{\sigma_{cr}^{(n)} t}$$

where N_m is the compressive or shear membrane force and F_m is the appropriate load factor, given in Section 5, for individual loading components in any loading combination. The superscript n refers to the particular type of loading. Superscripts n = 1, 2, 3, and 4 represent respectively axial compression, circumferential compression, torsion, and bending loads.

The following interaction equations were used in the design of the cylindrical shell.

a. · Axial Compression and Circumferential Compression

$$\sum_{m=o}^{m=k} \frac{N_m^{(1)} F_m}{\sigma_{cr}^{(1)} t} + \sum_{m=o}^{m=k} \frac{N_m^{(2)} F_m}{\sigma_{cr}^{(2)} t} < 1$$

b. Axial Compression and Bending

$$\sum_{m=o}^{m=k} \frac{N_m^{(1)} F_m}{\sigma_{cr}^{(1)} t} + \sum_{m=o}^{m=k} \frac{N_m^{(4)} F_m}{\sigma_{cr}^{(4)} t}$$

c. Axial Compression and Torsion

$$\sum_{m=o}^{m=k} \frac{N_m^{(1)} F_m}{\sigma_{cr}^{(1)} t} + \sum_{m=o}^{m=k} \frac{N_m^{(3)} F_m}{\sigma_{cr}^{(3)} t}^{2} < 1$$

d. Axial Compression, Bending, and Torsion

$$\sum_{m=o}^{m=k} \frac{N_m^{(1)} F_m}{\sigma_{cr}^{(1)} t} + \sum_{m=o}^{m=k} \frac{N_m^{(4)} F_m}{\sigma_{cr}^{(4)} t} + \left(\sum_{m=o}^{m=k} \frac{N_m^{(3)} F_m}{\sigma_{cr}^{(3)} t} \right)^2 < 1$$

e. Axial Compression, Circumferential Compression, and Torsion

$$\sum_{m=o}^{m=k} \frac{N_m^{(1)} F_m}{\sigma_{cr}^{(1)} t} + \sum_{m=o}^{m=k} \frac{N_m^{(2)} F_m}{\sigma_{cr}^{(2)} t} + \left(\sum_{m=o}^{m=k} \frac{N_m^{(3)} F_m}{\sigma_{cr}^{(3)} t} \right)^2 < 1$$

The longitudinal membrane stresses produced by the nonaxisymmetric pressure loads (NASPL) were considered as caused by bending loads in the interaction equations.

3.0 SHELLS STIFFENED WITH A COMBINATION OF CIRCUMFERENTIAL AND VERTICAL STIFFENERS

3.1 The shell was provided with permanent circumferential and vertical stiffeners. The circumferential stiffeners were designed to have a spring stiffness at least great enough to enforce nodes in the vertical stiffeners so as to preclude a general instability mode of buckling failure thus ensuring that if buckling occurs, it will occur in stiffened panels between the circumferential stiffeners. An acceptable procedure for determining the critical buckling stresses in the vertical stiffeners and stiffened panels is outlined in Section 3.4, Shell Analysis Manual, by E. H. Baker A. P. Cappelli, L. Kovalevsky, F. L. Rish, and R. M. Verette, National Aeronautics and Space Administration, Washington, D.C., Contractor Report CR-912, April 1968.

3.2 In addition for shells stiffened with a combination of circumferential and vertical stiffeners under combined load, the criterion for buckling failure of the shell place is expressed by an interaction equation of stress ratios in the form

$$R_1^x + R_2^y + R_3^z < 1$$

similar to the interaction equations of Section 2.5.

The critical buckling stresses for the shell plates between the circumferential and vertical stiffeners were determined by the following equations.

a. Curved Panel under Axial Compression.

The critical buckling stress for a curved cylindrical panel under axial compression alone is determined by the equation

$$\sigma_{cr} = \frac{K_c \ \pi^2 E}{12 \ (1 - \mu^2)} \left(\frac{t}{b}\right)^2$$

for various ranges of cylinder length given by

$$Z = \frac{b^2}{Rt} \sqrt{1 - \mu^2}$$

The constant K_c is determined from Figure 3.8B-8.

b. Curved Panel in Circumferential Compression

The critical buckling stress of a curved cylindrical panel under circumferential compression was determined by Section 2.2.

c. Curved Panel Under Torsion

The shear buckling stress of a curved cylindrical panel subjected to torsional loads is given by

$$\sigma_{cr} = \frac{K_s \ \pi^2 E}{12 \ (1 - \mu^2)} \left(\frac{t}{b}\right)^2 \quad a \geq b$$

for values of

$$Z = \frac{b^2}{Rt} \sqrt{1 - \mu^2}$$

The coefficient K_s is given in Figure 3.8B-9. For cylindrical panels with length a less than the arc length b the shear buckling stress is determined by

$$\sigma_{cr} = \frac{K_s' \ \pi^2 E}{12 \ (1 - \mu^2)} \left(\frac{t}{a}\right)^2 \quad a \leq b$$

for values of

$$z = \frac{a^2}{Rt} \sqrt{1 - \mu^2}$$

Curves for determining K'_s are given in Figure 3.8B-10.

d. Curved Panels Under Bending

The critical buckling stress for a curved panel in bending shall be computed using the equation for axial compression given in (a) of this section.

3.3 The critical buckling stress in a stiffened hemispherical shell for the analysis required in the bid specification is not treated in the Shell Analysis Manual, and except for external pressure, was determined by the following equation:

$$\sigma_{cr} = 0.125\ E\ \frac{t}{R}$$

where t = thickness of shell
E = modulus of elasticity
R = radius of shell

4.0 SPHERICAL SHELLS

4.1 The critical buckling stress in the spherical dome, except for external pressure, was determined by the following equation:

$$\sigma_{cr} = 0.125\ \frac{Et}{R}$$

Where t = shell thickness
E = modulus of elasticity
R = radius of shell

4.2 SPHERICAL SHELL UNDER COMBINED LOADS

The criterion for buckling failure of the dome is expressed by an interaction equation of the stress ratios in the form

$$R_1^{\ x} + R_2^{\ y} + R_3^{\ z} < 1$$

similar to the interaction equation of Section 2.5.

A set of interaction equations similar to these in Section 2.5 was used in the design except that the effects due to torsion were considered.

5.0 FACTOR OF SAFETY

The buckling stress criteria was evaluated to determine the factors of safety against buckling inherent in the criteria. The factors which affect stability were determined and the criteria was evaluated to account for these factors. The basis used to evaluate the criteria to account for the factors were (1) how well established are the effects of the factors on stability of these shells (2) amount of supporting data in the literature and (3) margins marked by the critical stresses and interaction equations used in the criteria. The buckling criteria was found to be very conservative and judged to provide at least a factor of safety of 2.0 against buckling for all loading conditions for which the vessels were designed.

In addition, a load factor of 1.1, will be applied to load conditions which includes the Safe Shutdown Earthquake (SSE). A load factor of 1.25 will be used with all other load conditions.

TABLE 3.8.B-1

MULTIPLE LOAD COMBINATIONS

VARIOUS PLANT CONDITIONS

Condition Load	Const. Cond.	Test Cond.	Normal Design	Norm. Oper.	Accident (Dynamic) 1/2 SSE	Accident (Static) 1/2 SSE	Accident (Dynamic) SSE	Accident (Static) SSE	Post Accident Flooding	External Pressure Cond.
Airlock Live Load	X		X	X					X	

*Nonaxisymmetrix pressure transient loads

**See following page for allowable stress condition

***See hydrostatic load, Figure 1.8.2-1

****Leave snow load off. Meridional stress from pressure is tension. Snow load gives compressive meridional stress in cylinder. Construction load will control sphere.

TABLE 3.8.B-2

ALLOWABLE STRESS INTENSITIES

PLUS BUCKLING LOAD FACTORS

Loading Condition	Allowable Stress Condition	Applicable ASME Code Reference (1) for Stress Intensity	Buckling Load Factors
1	A	NB-3221	In accordance with ASME Code, Section VIII
1A			
5			
2	B	NB-3222	Load factor = 1.25 for both cylindrical portion and hemispherical head
3	C	NB-3223	Load factor = 1.25 for both cylindrical portion and hemispherical head
4	D	NB-3224	Load factor = 1.1 for both cylindrical portion and hemispherical head
6	E	NB-3226	NA
7	F	NB-3224	NA

BUCKLING-STRESS COEFFICIENT, C_c, FOR UNSTIFFENED UNPRESSURIZED CIRCULAR CYLINDERS SUBJECTED TO AXIAL COMPRESSION

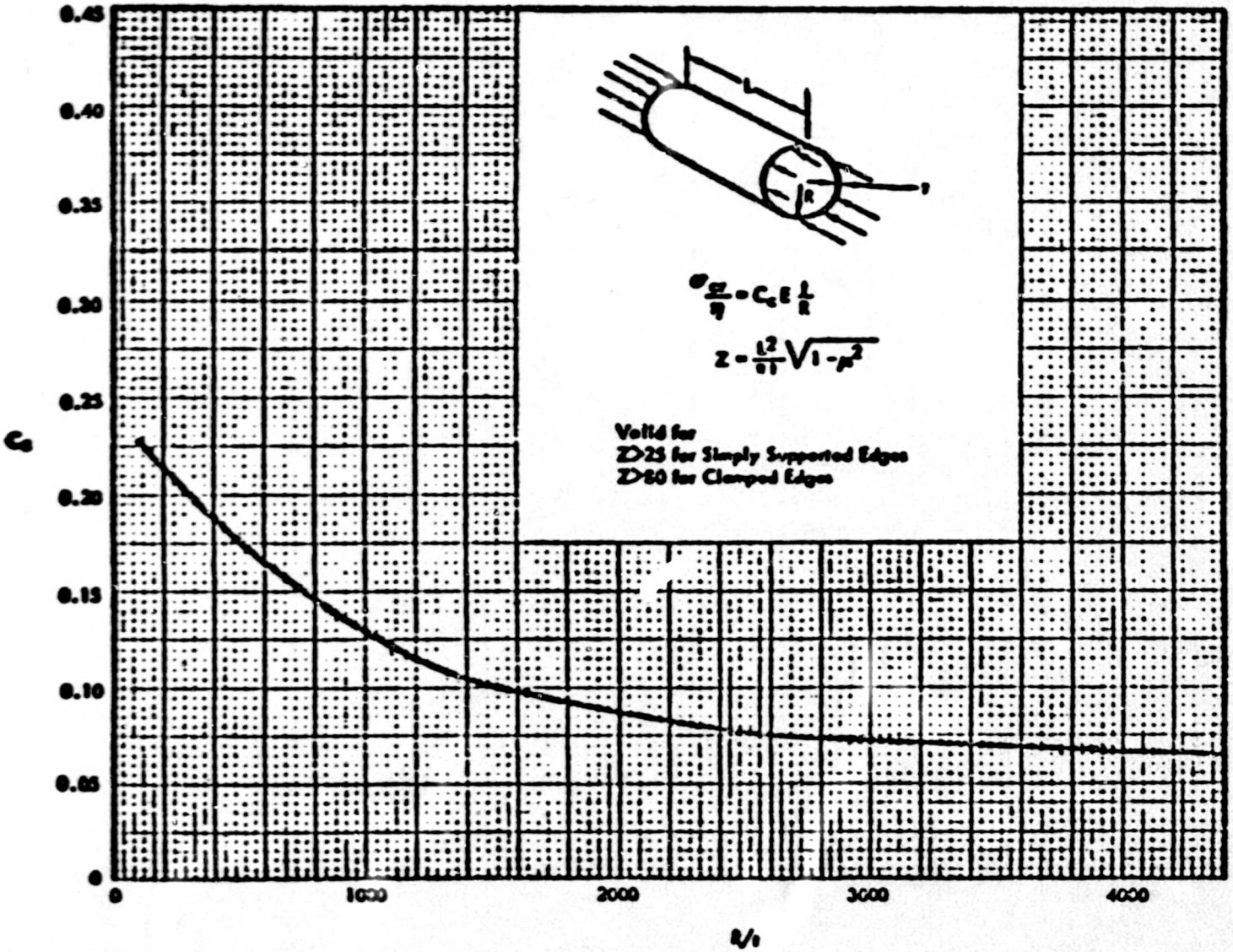

FIGURE 3.8B-1

INCREASE IN AXIAL-COMPRESSIVE BUCKLING-STRESS COEFFICIENT OF CYLINDERS DUE TO INTERNAL PRESSURE

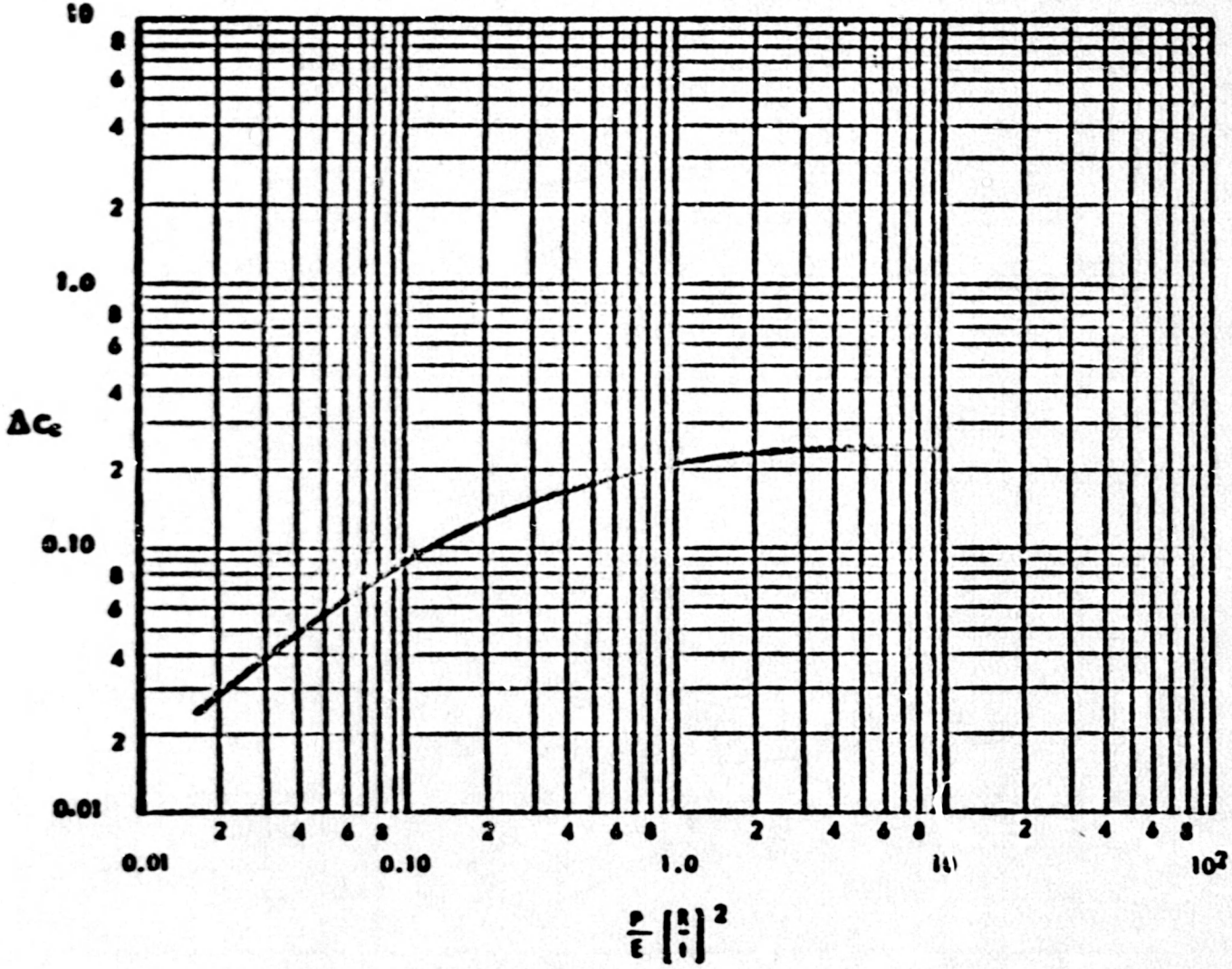

FIGURE 3.8B-2

BUCKLING COEFFICIENTS FOR CIRCULAR CYLINDERS SUBJECTED TO EXTERNAL PRESSURE

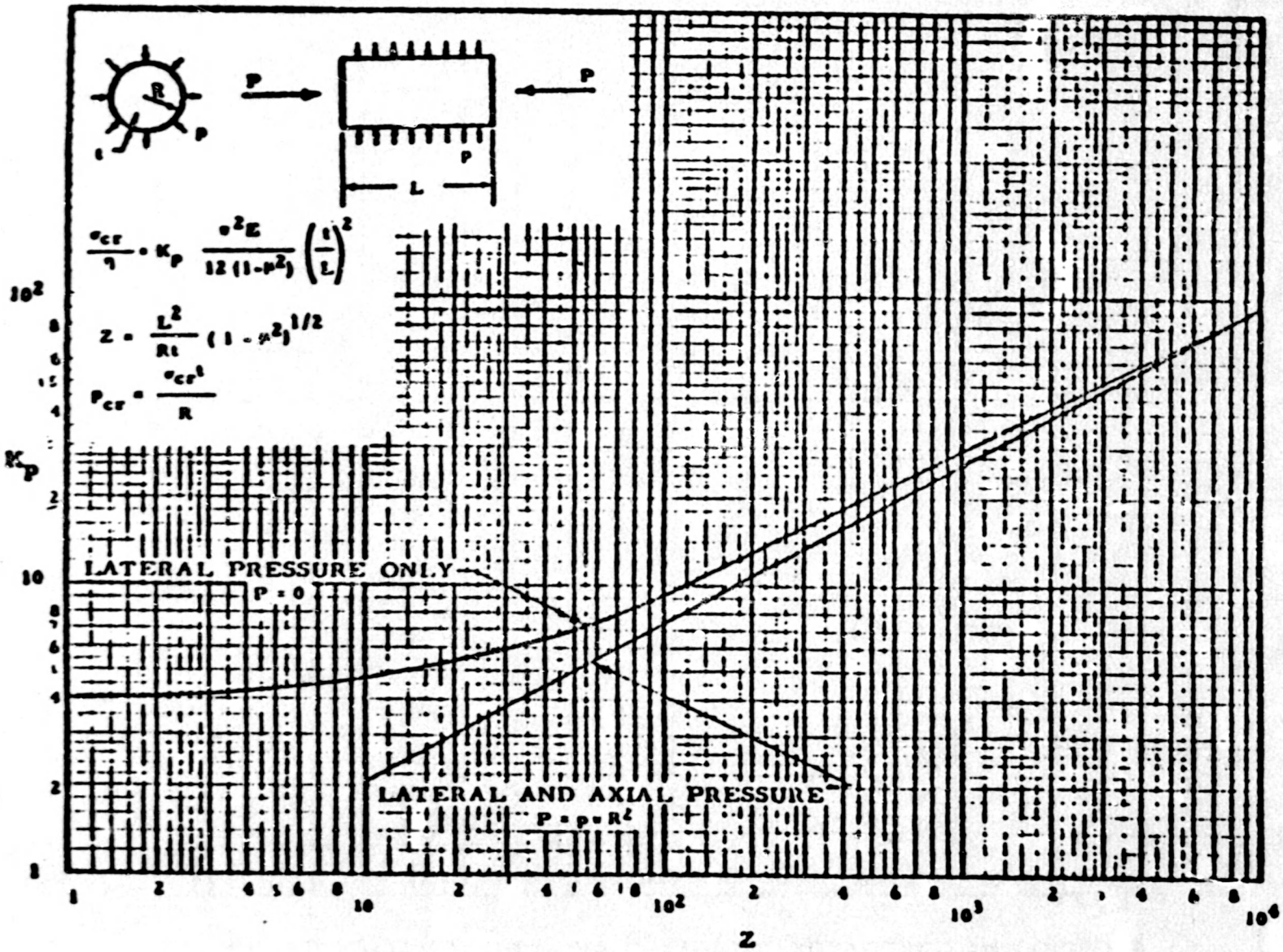

FIGURE 3.8B-3

BUCKLING-STRESS COEFFICIENT, C_θ, FOR UNSTIFFENED UNPRESSURIZED CIRCULAR CYLINDERS SUBJECTED TO TORSION

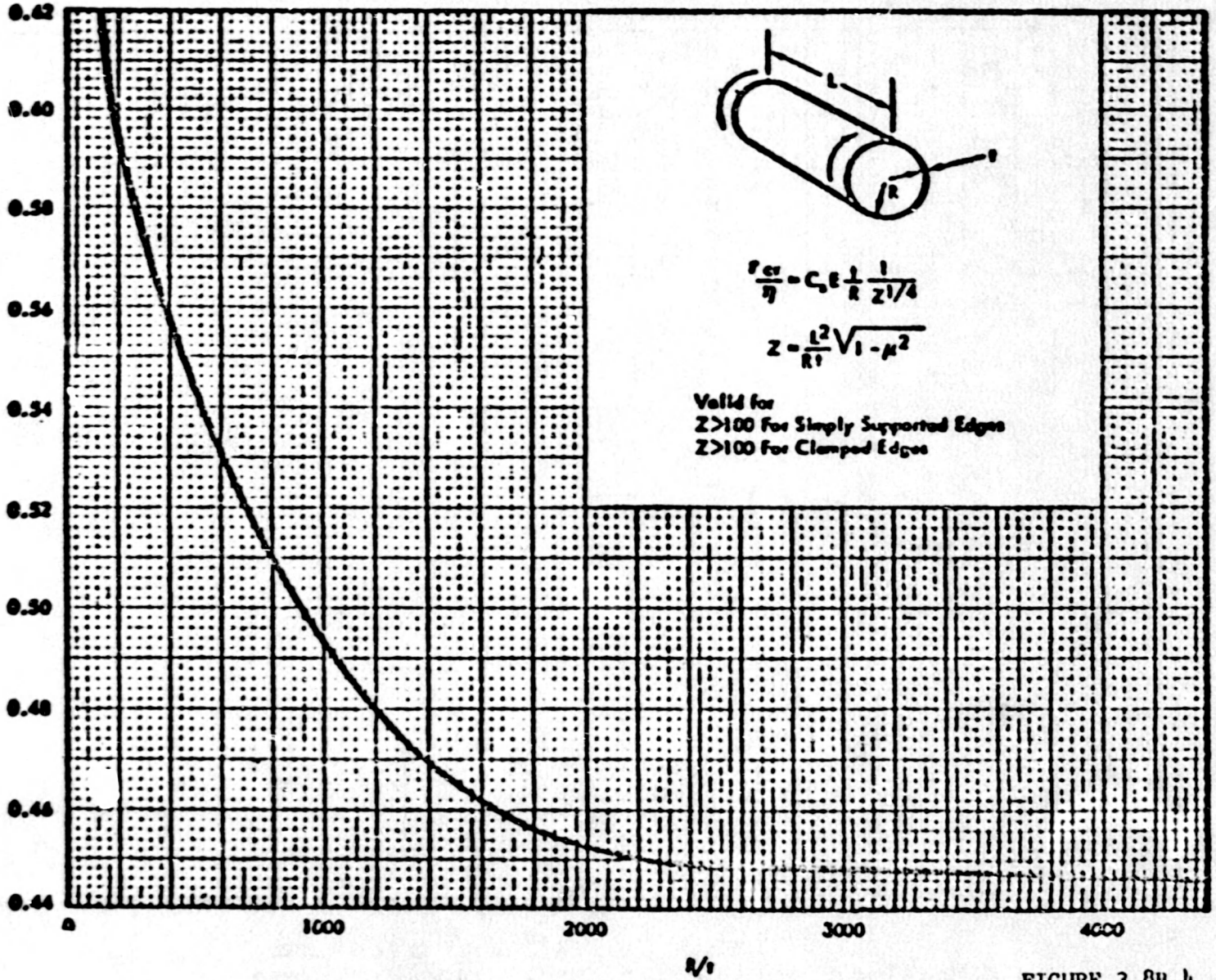

FIGURE 3.8B-4

INCREASE IN TORSIONAL BUCKLING-STRESS COEFFICIENT OF CYLINDERS DUE TO INTERNAL PRESSURE

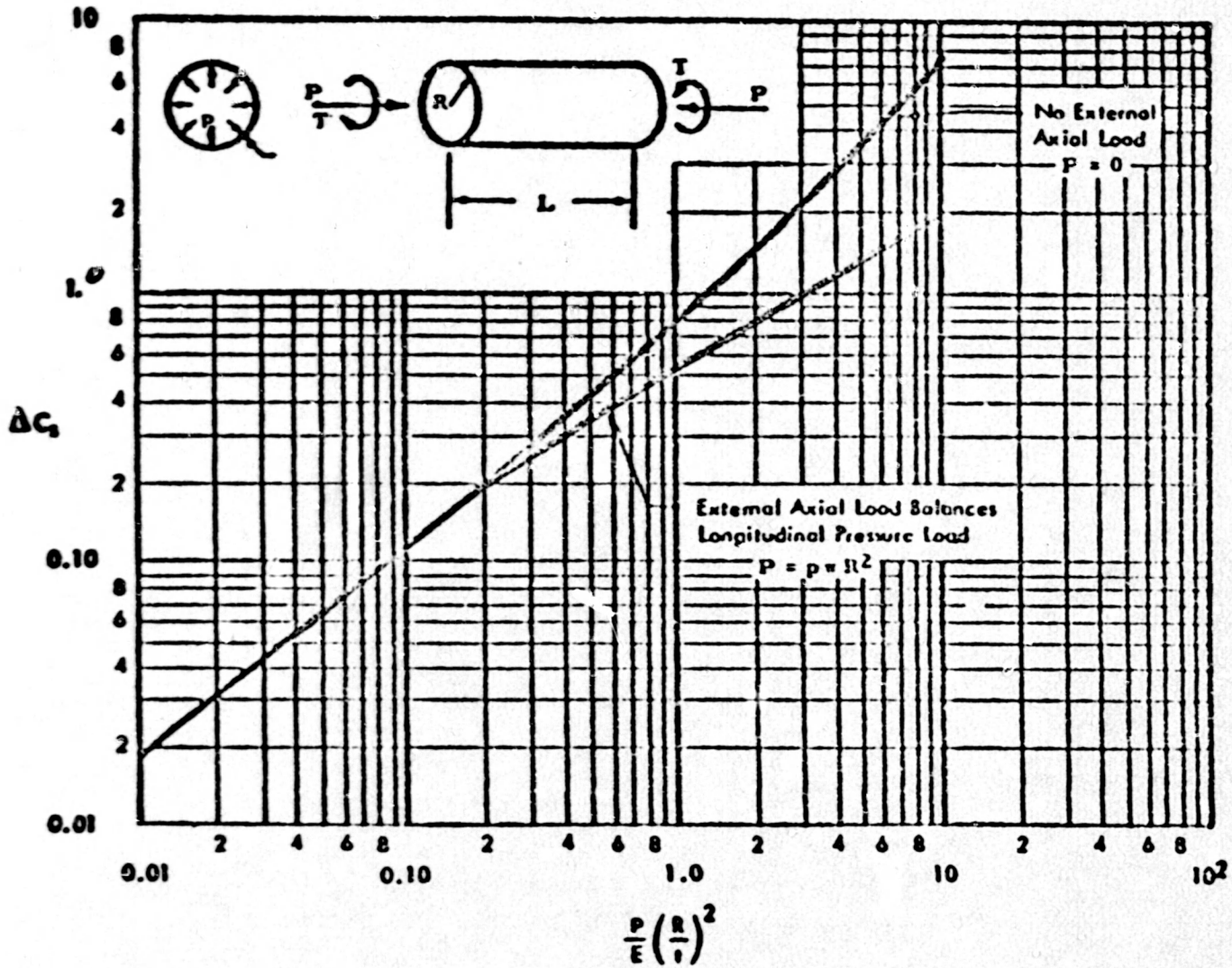

FIGURE 3.8B-5

BUCKLING-STRESS COEFFICIENT, C_b, FOR UNSTIFFENED UNPRESSURIZED CIRCULAR CYLINDERS SUBJECTED TO BENDING

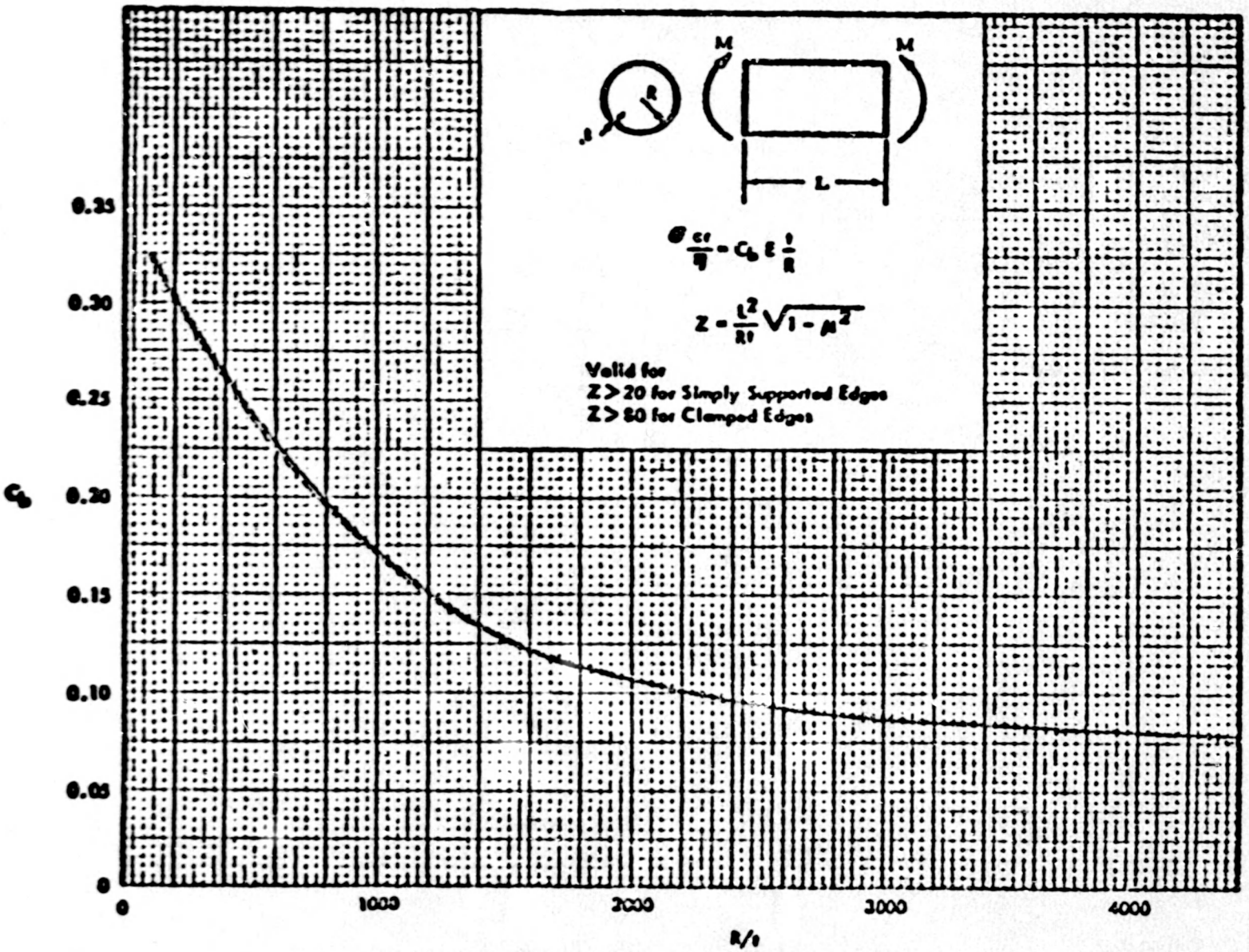

FIGURE 3.8B-6

INCREASE IN BENDING BUCKLING-STRESS COEFFICIENT
OF CYLINDERS DUE TO INTERNAL PRESSURE

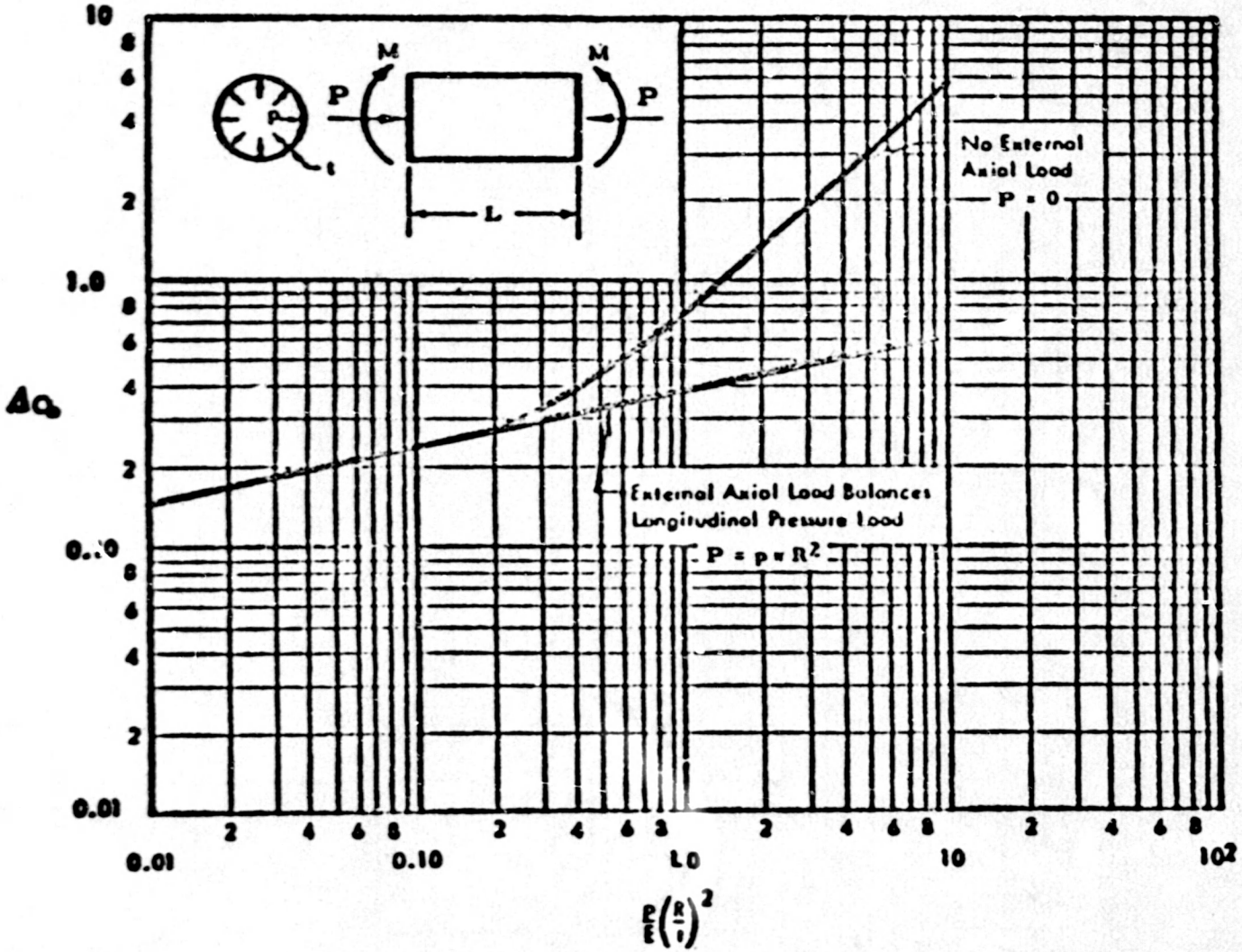

FIGURE 3.8B-7

BUCKLING-STRESS COEFFICIENT, K_c, FOR UNPRESSURIZED CURVED PANELS SUBJECTED TO AXIAL COMPRESSION

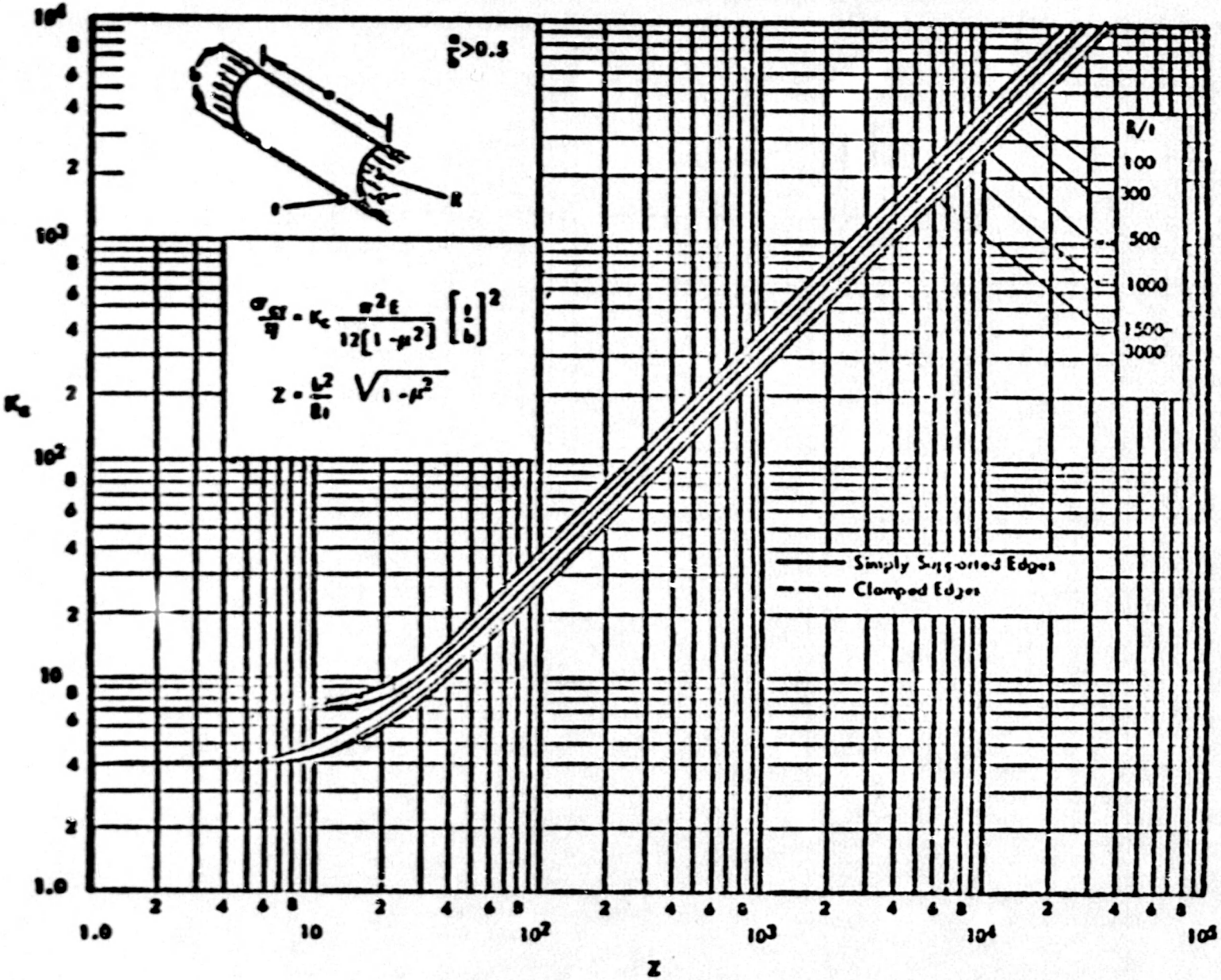

BUCKLING STRESS COEFFICIENT, K_s, FOR UNPRESSURIZED CURVED PANELS SUBJECTED TO SHEAR

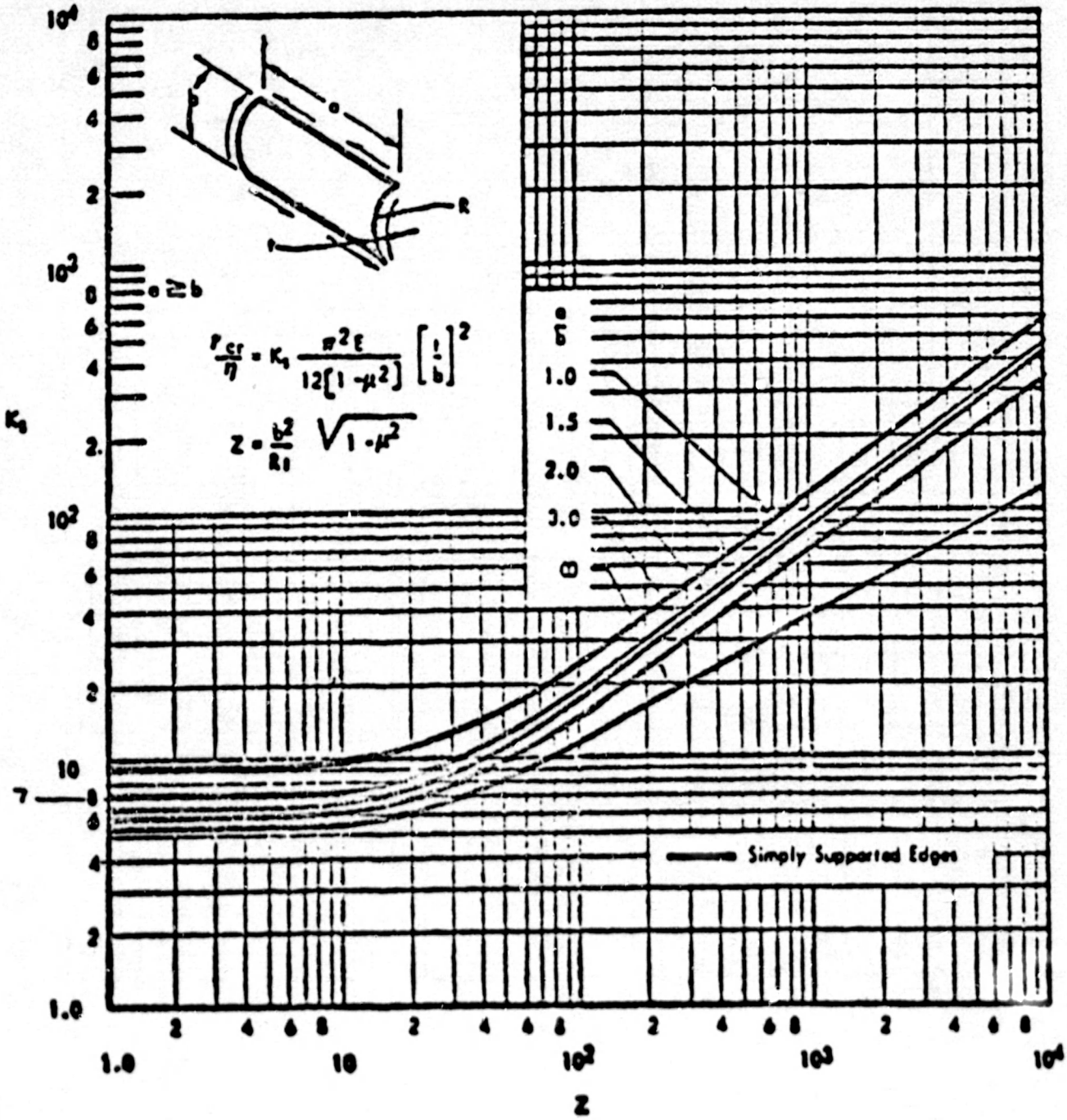

FIGURE 3.8B-9

BUCKLING STRESS COEFFICIENT, K_s, FOR UNPRESSURIZED CURVED PANELS SUBJECTED TO SHEAR

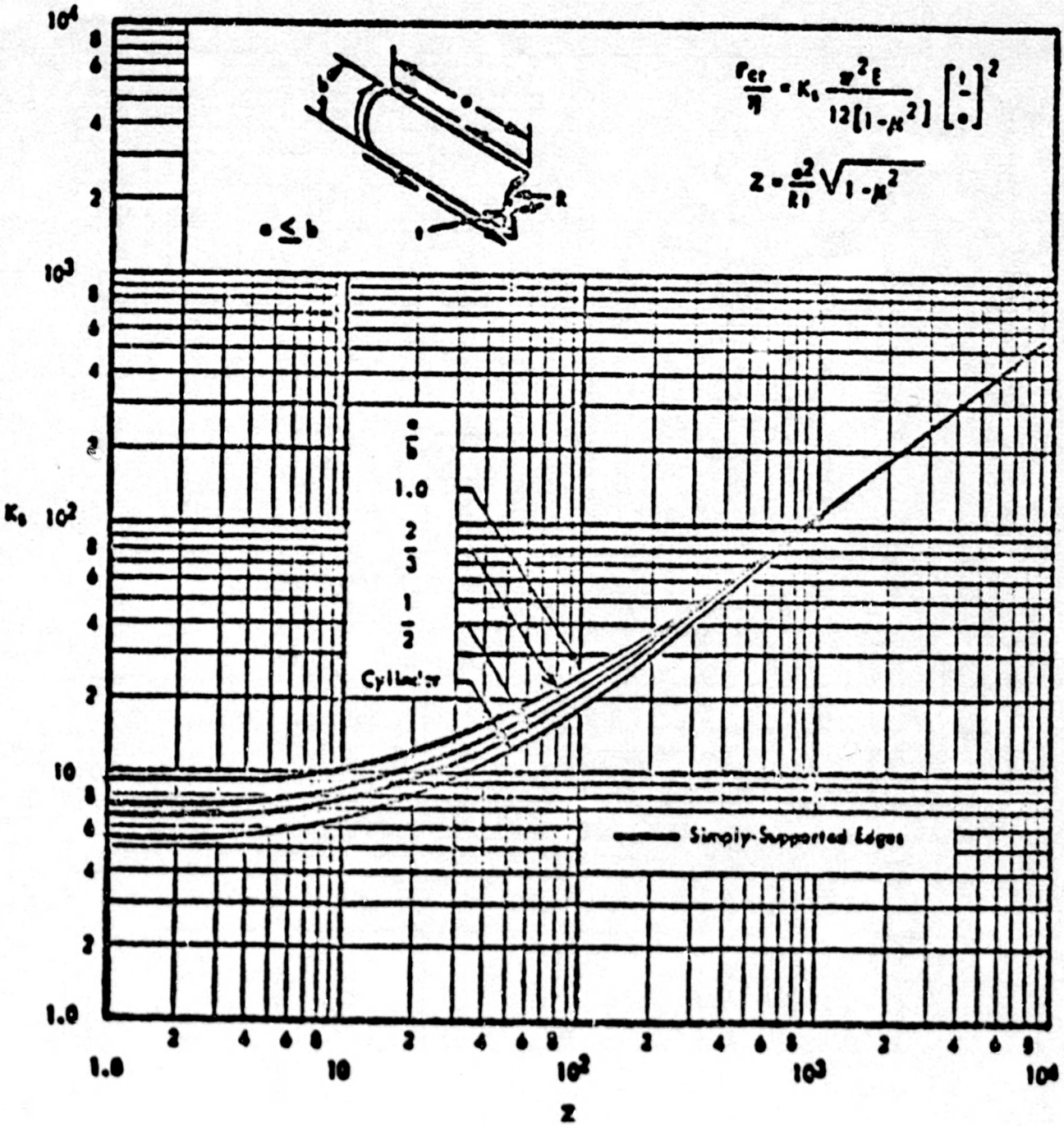

FIGURE 3.8B-10

3.8.2 Steel Containment System

3.8.2.1.1 Description of the Containment

The containment vessel for Watts Bar is a low-leakage, free-standing steel structure consisting of a cylindrical wall, a hemispherical dome, and a bottom liner plate encased in concrete. Figure 3.8.2-1 shows the outline and configuration of the containment vessel.

The structure consists of side walls measuring 114 feet 8-5/8 inches in height from the liner on the base to the spring line of the dome and has an inside diameter of 115 feet. The bottom liner plate is 1/4 inch thick, the cylinder varies from 1-3/8 inch thickness at the bottom to 1 1/2 inch thick at the springline, and the dome varies from 1-3/8 inch thickness at the springline to 15/16 inch thickness at the apex.

The bottom liner plate serves as a leak-tight membrane only (not a pressure vessel). The liner plate is anchored to the concrete by welding it continuously to steel plates embedded in and anchored into the base mat. The anchorage system of the cylindrical walls and the juncture of the cylinder to the base mat are shown in Figure 3.8.2-2.

The containment vessel dome, which is provided with a circumferential stiffener just above the springline supports eight penetrations and several attachments. Two penetrations are for the RHR spray system, two penetrations are for the containment spray system, and the remaining four penetrations are spares. The major attachments to the dome consist of lighting fixture supports, header supports for the RHR spray and containment spray systems, and the collector rail supports for the polar crane. Details of these penetrations and attachments are shown in Figure 3.8.2-3.

The containment vessel is provided with both circumferential and vertical stiffeners on the exterior of the shell. These stiffeners are required to satisfy design requirements for expansion and contraction, seismic forces, and pressure transient loads. The circumferential stiffeners were installed on approximately 10-foot centers during erection to insure stability and alignment of the shell. Vertical stiffeners are spaced at 5 degrees between the two lowest circumferential stiffeners. Other locally stiffened areas are provided at the equipment hatch and two personnel locks. Exterior pipe guides and restraints for the RHR spray and containment spray systems are attached to some of the circumferential stiffeners.

3.8.2.1.2 Description of Penetrations

Most penetration sleeves were pre-assembled into the containment vessel shell plates and stress relieved prior to installation of the plates into the containment vessel shell. Those penetration sleeves which required field installation were provided with insert plates of the same thickness as the shell plates and stress relieved as an assembly.

Equipment Hatch

The equipment hatch is composed of a cylindrical sleeve in the containment shell and a dished head 20.0 feet in diameter with mating bolted flanges. The flanged joint has double gasketed seals with an annular space for pressurization and testing.

The equipment hatch was designed, fabricated, and tested in accordance with "Section III, Subsection NE, of the ASME Boiler and Pressure Vessel Code."

Details of the equipment hatch are shown on Figure 3.8.2-4.

Personnel Locks

Two personnel locks are provided for each unit. Each lock has double doors with an interlocking system to prevent both doors being opened simultaneously. Remote indication is provided to indicate the position of the far door. Quick-acting type equalizing valves are used to equalize the pressure inside the lock when entering or leaving the Containment. Double seals are provided on the doors.

The personnel locks are completely prefabricated and assembled welded steel subassemblies designed, fabricated, tested and stamped in accordance with "Section III, Subsection NE" of the ASME Code.

Details of the personnel locks are shown on Figure 3.8.2-5.

Fuel Transfer Penetration

A 20-inch diameter fuel transfer penetration is provided for transfer of fuel between the fuel pool and the containment fuel transfer canal.

Expansion bellows were provided to accommodate differential movement between the connecting buildings. Figure 3.8.2-6 shows conceptual details of the fuel transfer penetration.

Spare Penetrations

Spare penetrations were provided to accommodate future piping and electrical penetrations. The spare penetrations consist of the penetration sleeve and head.

Purge Penetrations

The purge penetrations have one interior and one exterior quick-acting tight-sealing isolation valve. Details of the purge penetrations are shown on Figure 3.8.2-7.

Electrical Penetrations

Medium voltage electrical penetrations for reactor coolant pump power (shown on Figure 3.8.2-7) use sealed bushings for conductor seals. The assemblies incorporate dual seals along the axis of each conductor.

Low voltage power, control and instrumentation cables enter the containment vessel through penetration assemblies which are designed to provide two leak tight barriers in series with each conductor.

All electrical penetrations are designed to maintain containment integrity for Design Basis Accident conditions including pressure, temperature and radiation. Double barriers permit testing of each assembly as required to verify that containment integrity is maintained.

Qualification tests which may be supplemented by analysis, have been performed and documented on all electrical penetration assembly types to verify that containment integrity will not be violated by the assemblies in the event of a design basis accident. Existing test data and analysis on electrical penetration types may be used for this verification if the particular enrivonmental conditions of the test were equal to or exceeded those for the Watts Bar Nuclear Plant.

Mechanical Penetrations

Typical mechanical penetrations are shown on Figure 3.8.2-8.

Mechanical penetration functional requirements, code considerations, analysis and design criteria are defined in Section 3.8.2.4.6.

3.8.2.2 Applicable Codes, Standards and Specifications

3.8.2.2.1 Codes

The design of the containment vessel meets the requirements of the ASME Code, Section III, Subsection NE, Applicable Code cases include 1431, 1517, 1529 and 1493, [Winter 1971 Addenda].

The design of the bottom liner plates conforms to the requirements of the applicable subsections of the ASME Code, Section VIII, Division 1, and Section III, Paragraph NE-5120.

Nonpressure parts, such as supports, bracing, inspection platforms, walkways, and ladders were designed in accordance with the American Institute of Steel Construction (AISC) "Specification for the Design, Fabrication, and Erection of Structural Steel for Buildings," Seventh Edition.

The anchorage at the containment vessel meets the requirements of the ASME Code, Section III, with a maximum allowable stress for the anchor bolts of 2 x Sm.

3.8.2.2.2 Design Specification Summary

Design Criteria

The containment vessel, including access openings and penetrations, is designed so that the leakage of radioactive materials from the containment structure under conditions of pressure and temperature resulting from the largest credible energy release following a loss-of-coolant accident (LOCA), including the calculated energy from metal-water or other chemical reactions that could occur as a consequence of failure of any single active component in any emergency cooling system, will not result in undue risk to the health and safety of the public, and is designed to limit below 10CFR100 values the leakage of radioactive fission products from the containment under such (LOCA) conditions.

The basic structural elements considered in the design are the vertical cylinder and dome acting as one structure, and the bottom liner plate acting as another. The bottom liner plate is encased in concrete and is designed as a leak tight membrane only. The liner plate is anchored to the concrete by welding it continuously to steel members embedded and anchored in the concrete base mat.

On the exterior at approximately 20-foot centers the containment shell is provided with circular inspection platforms which also are designed as permanent circumferential stiffeners. Additional circumferential stiffeners are provided at personnel and equipment hatches and at other large attached masses, along with vertical stiffeners for some distance above and below these attachments. Still additional permanent circumferential stiffeners are required for stability as discussed in Section 3.8.2.4.4. Temporary stiffening was not required to meet tolerance requirements specified by TVA in the erection of the vessel. The design provides for movements of the vessel and supports due to expansion and contraction, pressure transient loads, and seismic motion. No allowance is made for corrosion in determining the material thickness of the vessel shell.

The following pressure and temperatures were used in the design of the vessel:

Overpressure test (1)	16.9 psig
Maximum internal pressure (2) (3) (4)	15.0 psig at 220°F
Design internal pressure (3)	13.5 psig at 220°F
Leakage rate test pressure	15.0 psig
Design external pressure	2.0 psig
Lowest service metal temperature	30°F
Operating ambient temperature	120°F
Operating internal temperature	120°F
Design temperature	250°F

1. 1.25 times design internal pressure as required by ASME Code, NE-6322.

2. See Paragraph NE-3312(b) of Section III of the ASME Code which states that the "design internal pressure" of the vessel may differ from the "maximum containment pressure" but in no case shall the design internal pressure be less than 90 percent of the maximum containment internal pressure.

3. Typical pressure transient curves are presented in Chapter 6. These curves show the transient pressure buildup in the

compartments after a "loss-of-coolant accident (LOCA)" or "Design Basis Accident (DBA)" before a steady-state pressure of 15.0 psig is reached.

4. Shell temperature transient curves are presented in Appendix 3.8A. These curves show the shell temperature at the lower compartment wall, upper compartment wall, and ice condenser wall.

In order to ensure the integrity of the containment, an analysis of the missile and jet forces due to pipe rupture was considered. This problem was eliminated by providing barriers to protect the containment vessel. Typical barriers are the main operating floor (Elevation 756.63) and the crane support wall. An example of a special barrier is the guard pipe enclosing the main steam and feedwater pipes between the Shield Building and the crane wall.

Allowable Stress Criteria

Allowable stress criteria for the containment vessel are shown in Table 3.8.2-1. The response of the containment vessel to seismic and pressure transient loadings results in a condition in which buckling of the steel shell may occur. Since the ASME Code does not define the allowable buckling stresses for this type of loading condition, an acceptable buckling criteria with appropriate factors of safety is given in Appendix 3.8B.

3.8.2.2.3 NRC Regulatory Guides

Applicable NRC Regulatory Guides are shown below. These guides were used as the basis for design of a number of safety oriented features.

Regulatory Guide 1.4: Assumptions used for evaluating the potential radiological consequences of a loss-of-coolant accident for pressurized water reactors.

A dynamic analysis of the containment vessel was made for the pressure transient loadings. The containment vessel penetrations were designed to withstand the maximum internal pressure that could occur due to a loss-of-coolant accident and the jet forces associated with the flow from the postulated pipe rupture.

Regulatory Guide 1.7: Control of combustible gas concentrations in containment following a loss-of-coolan accident.

A hydrogen recombiner is provided inside the containment to control the hydrogen buildup following a loss-of-coolant accident.

Regulatory Guide 1.28: Quality assurance program requirements (design and construction).

A Quality Assurance Plan for the Watts Bar Nuclear Plant was developed as a comprehensive plan for the design and construction of the Watts Bar Nuclear Plant. The Quality Assurance Plan of the Westinghouse Electric Corporation, the supplier of the Nuclear Steam Supply System, is also contained therein.

The plans were prepared to assure that the control of quality was performed and documented for each phase of design, material selection, fabrication, installation, and/or erection in accordance with the approved specifications and drawings. The plans relate principally to the reactor coolant and safety system, the containment and other components necessary for the safety of the nuclear portion of the plant.

The plan assures that:

1. Final design requirements and final detailed designs are in accordance with applicable regulatory requirements and design bases.

2. Components and systems to which this plan applies are identified and that the final design takes into account the varying degrees of importance of components and systems as evidenced by the possible safety consequences of malfunction or failure.

3. Purchased material and components fabricated in vendor shops conform to the final design requirements.

4. Components and systems are assembled, constructed, erected, and tested in accordance with the final design requirements and to requirements specified in Safety Analysis Reports for the plant.

5. The as-constructed plant can be operated and maintained in accordance with requirements specified in the Safety Analysis Reports.

Regulatory Guide 1.57: Design limits and loading combinations for metal primary reactor containment system components.

The loadings for the containment vessel were combined as in Section 3.8.2.3.2. The allowable stress criteria are shown in Table 3.8.2-1.

3.8.2.3 Loads and Loading Combinations

3.8.2.3.1 Design Loads

The following loads are used in the design of the containment vessel and appurtenances.

Dead Loads

These loads consist of the weight of the steel containment vessel, penetration sleeves, equipment and personnel access hatches, and attachments supported by the vessel.

Live Loads

Penetration loads as applicable (including seismic). Typical penetration loads are shown in Appendix 3.8D.

Floor load of 100 psf or 1000 pounds concentrated moving loads applied to the passage area of the personnel air locks.

Construction and snow loads at 50 psf but not simultaneously.

Floor load of 50 psf plus 225 pounds per liner foot for walkways.

Thermal Stresses During Design Basis Accident (DBA)

The containment vessel is designed to contain all the effluent which would be released by a hypothetical loss-of-coolant accident. This accident assumes a sudden rupture of the reactor coolant system which would result in a release of steam and a steam-air mixture in the vessel. It is calculated that this mixture would cause a lower compartment temperature of 250°F and an upper compartment temperature of 190°F, both occurring essentially instantaneously. After the accident, an internal spray system will commence spraying in the upper compartment only. The spray will discharge water on the interior of the upper compartment. For shell temperature transients refer to Appendix 3.8A.

Hydrostatic Loads

The containment vessel is designed for three separate flood conditions. Hydrostatic load, Case IB, accounts for the flooded condition due to ice melt from the ice condenser after the DBA.

After all the ice has melted the containment will be flooded to 719'-3". Also considered is the loading condition during meltdown (hydrostatic load, Case IA). Water will rise to a depth of 2 feet on the floor of the ice condenser. At this time, the depth of water on the containment cylindrical shell will be 9'-3".

Hydrostatic load, Case II, accounts for the post-accident fuel recovery condition. In order to remove fuel from the containment after the DBA, the containment vessel is designed for an internal hydrostatic head of 47'-3".

For hydrostatic load cases refer to Figure 3.8.2-1.

Ice Condenser Duct Panel Loads

The outer duct panels of the ice condenser are attached to the containment with threaded studs. These panels impart small horizontal and vertical forces on the containment shell under seismic conditions. The distribution of these loads to the shell is shown in Figure 3.8.2-1.

Equipment Loads

Equipment loads are those specified on drawings supplied by manufacturers of the equipment.

Overpressure Test

To test the structural integrity of the vessel an overpressure test of 125 percent of design pressure is applied under controlled conditions.

External Pressure Load

It is necessary that pressure be equalized between the containment vessel and the annulus between Shield Building and containment vessel during normal plant operation to ensure that containment external design pressures are not exceeded. The containment vessel is stiffened and designed to withstand an external pressure of 2.0 psig.

Seismic Loads

Seismic loads are computed using the following:

1. Operating Basis Earthquake maximum ground accelerations

   horizontal 0.09 g

   vertical 0.06 g

2. Safe Shutdown Earthquake maximum ground accelerations

horizontal 0.18 g

vertical 0.12 g

Response spectra are shown in Section 2.5.

Classifications of structures and equipment are shown in Section 3.2.1. See Section 3.7 for a detailed description of the seismic analysis. Damping ratios are shown in Section 3.7.1.

Wind Loads

The containment vessel and its penetrations are completely enclosed by the shield building, and are therefore not subject to the effects of wind and tornadoes.

However, during construction, the vessel dome is exposed to the elements for a short duration. For this construction condition, a wind load of 30 psf on the projected area of the vessel dome is considered.

Non-Axisymmetric Transient Pressure Loads

The division of the containment into compartments is described in Chapter 6 and in Section 3.8.2.4.4.

Pressure transient loads are considered for occurrence of the design break accident (double-ended rupture of the reactor coolant system) in all 6 lower compartment volumes. The curves presented in Chapter 6 represent the containment pressure transients for break location 1 through 6 for each of the 49 containment elements. The pressures and differential pressures shown on these figures have no margin. The initial containment pressure was assumed to be 0.3 psig. This allows for an initial containment pressure before containment venting is required. The most severe containment pressure differences occur during the first 0.9 second of the blowdown.

For structural design purposes the pressures represented by the curves are increased by 45 percent. This allows for changes in such factors as equipment configuration and openings between compartments, which can influence the flow characteristics of the containment space; the effects of moisture entrainment; and tolerances in the analytical constraints used in the code. (The effects of moisture entrainment, investigated by TVA and

Chicago Bridge and Iron Company (CB&I), do not control the design of the containment vessel for any loading condition).

3.8.2.3.2 Loading Conditions

The following loading conditions are used in the design of the containment vessel:

1. Normal Design Condition

   Dead load of Containment Vessel and appurtenances

   Lateral and vertical load due to one-half Safe Shutdown Earthquake

   Personnel access lock floor live load

   Penetration loads

   Design Internal Pressure or Design External Pressure

   Design temperature

2. Normal Operation Condition - Operating Basis Earthquake

   Dead load of Containment Vessel and appurtenances

   Lateral and vertical load due to Operating Basis Earthquake

   Penetration loads

   Spray header and lighting fixture live loads

   Walkway live loads

   Personnel access lock floor live load

   Internal temperature range 60 to 120°F

3. Upset Condition - Design Basis Accident and Operating Basis Earthquake

   Dead load of Containment Vessel and appurtenances

   Design internal pressure or pressure transient loads

Lateral and vertical load due to Operating Basis Earthquake

Penetration loads

Thermal stress loads including shell temperature transients

Hydrostatic load Case IA or IB

Internal temperature range 80 to 250°F

4. Emergency Condition - Design Basis Accident and Safe Shutdown Earthquake

Dead load of Containment Vessel and appurtenances

Design internal pressure or pressure transient loads

Lateral and vertical load due to Safe Shutdown Earthquake

Penetration loads

Thermal stress loads including shell temperature transients

Hydrostatic load Case IA or IB

Internal temperature range 80 to 250°F

5. Construction Condition at Ambient Temperature

Dead load of Containment Vessel and appurtenances

Snow load at 20 psf

Lateral load due to wind

Temporary construction live loads on catwalks, platforms, and hemispherical head including support of the first pour of the concrete shield building dome

6. Test Condition at Ambient Temperature

Dead load of Containment Vessel and appurtenances

Internal test pressure

The weight of contained air

7. Post-Accident Fuel Recovery Condition with Flooded Vessel

Dead load of Containment Vessel and appurtenances

Hydrostatic load Case II

3.8.2.4 Design and Analysis Procedures

3.8.2.4.1 Introduction

The design, fabrication, and erection of the steel containment vessels were contracted to Chicago Bridge and Iron Company (CB&I), Oakbrook, Illinois. The design of the vessels was reported by CB&I in an eleven volume stress report from which the following design and analysis procedures were taken. TVA reviewed the stress report as required by ASME Code Section NA-3260. Furthermore, TVA performed a complete design review of CB&I work to insure the adequacy of the design. As part of the design review, independent analyses were performed for seismic, thermal and pressure transient loading conditions, and, in addition, for a complete buckling analysis.

Compressive stresses in the containment vessels are produced by dead, live, seismic, and pressure transient loads. But pressure transient loads are by far the most significant loads to the stability of the vessels. Therefore, buckling is addressed only in Section 3.8.2.4.4, Non-Axisymmetric Pressure Loading Analyses.

3.8.2.4.2 Static Stress Analysis

A detailed stress analysis of all major structural components was prepared in sufficient detail to show that each of the stress limitations of the ASME Boiler and Pressure Vessel Code, Section III, Section NE-3000 was satisfied when the vessel is subjected to the loading combinations enumerated in this Section.

Details of the juncture of the cylinder to the base mat are shown in Figure 3.8.2-2. In the analysis, the juncture was considered to be a point of infinite rigidity. The cylinder at this point cannot expand or rotate under the internal pressure and temperature load conditions; hence, shear and moment are introduced into the cylinder wall.

At the point the knuckle is welded to the vessel a backup stiffener is used. This stiffener gives added rigidity at the point of the weld. Additional protection of the knuckle is accomplished by encasing the knuckle in "Fiberglas" before floor concrete placement.

The embedded knuckle was designed to take interior pressure plus internal or external hydrostatic loads. It was assumed that cracks can occur in the concrete allowing pressure loads on the embedded knuckle. Anchor bolts were post-tensioned to prevent any cracking of the concrete. Thermal and pressure discontinuity stresses in the containment occur one foot above the last weld of the knuckle.

The stresses due to dead loads internal, and snow loads were determined at a sufficient number of locations to define the state of stress in the vessel under these loadings. Wind, snow and external support loads on the dome occurred during construction. Stresses due to dead loads, internal and external pressure were determined by hand calculations using classical strength of materials theory. Detail stresses in the embedment region at the base of the vessel were determined from a shell model of the vessel using CB&I computer program 781 described in Appendix 3.8C. The circumferential stiffeners on the embedment region were modeled as horizontal elements and the effect of vertical stiffeners was considered by modeling the shell plate as an orthrotropic material. Forces and bending moments due to the various loads were given by CB&I computer program 781, whereas the resulting detailed stress distribution was calculated using actual geometry of the vessel and stiffening in this region.

Design of spherical and cylindrical vessels for internal and external pressure is explicitly treated in Section NE of the ASME Boiler and Pressure Vessel Code. The vessels as designed are in full compliance with the Code requirement for internal and external pressure, and provisions applicable to other load conditions.

3.8.2.4.3 Dynamic Seismic Analysis

The containment vessel dynamic seismic analyses were performed using a lumped mass beam model. Structural and equipment masses were included, and structural properties were computed by hand calculations. The beam model and its properties are shown in Figure 3.8.2-9.

Maximum overturning moments, shears, deflections, and shell stresses were computed by the response spectrum method. The site seismic design response spectra for 1 percent damping described in Sections 2.5.2.6 and 2.5.2.7 were utilized. The analyses were performed by CB&I proprietary computer program 1017 described in Appendix 3.8C. Total response was computed by taking the absolute sum of the modal responses.

A time-history analysis of the same beam model was performed in order to develop response spectra for equipment attached to the containment vessel. Four artificial earthquakes, each having an averaged response spectrum greater than the design response spectrum provided the seismic input. Using each of the artificial earthquakes individually, the beam model was analyzed and histories of acceleration were generated. For each of the acceleration histories, response spectra for various mass points and values of assumed equipment damping were generated. The design spectra were the envelopes of the spectra generated from the four earthquakes. These calculations were performed by CB&I computer programs 1017, 1044, and 1668, all of which are described in Appendix 3.8C.

3.8.2.4.4 Non-Axisymmetric Pressure Loading Analysis

The non-axisymmetric pressure loading (NASPL) results from an assumed sudden rupture in the reactor coolant system. The associated pressure loads are dynamic in nature and vary with time in both the circumferential and meridianal directions in the vessels. The loads are non-axisymmetric for a short period culminating in uniform internal pressure throughout the containment. For analysis purposes, the containment was subdivided into forty-nine volumes and pressure-time histories determined for each volume for the postulated rupture, i.e., each break in the reactor coolant system. The pressure histories for each of the volumes were computed by the Westinghouse Electric Corporation using the TMD code network documented in Section 6.2.1.3. Figures 3.8.2-10 and 3.8.2-11 shows the volumes used to characterize the pressure in the containment.

Dynamic analyses were made for twelve breaks in the reactor coolant piping, six hot leg and six cold leg breaks. Two separate and distinct analysis methods were used in the design process. The overall vessel response was determined by a dynamic analysis treating the vessel as a lumped mass cantilever beam and by a dynamic shell analysis which considered the effects of lobar vibration modes.

1. Beam Analysis

In the CB&I lumped mass beam analysis, each mass represented the mass of the vessel stiffeners and attached masses. The cantilever beam model was loaded with the forces from the NASPL. The forces were resolved into X and Y components and applied as mass point loads in the north-south and east-west directions.

The response of the model to non-axisymmetric pressure transients was calculated by CB&I program 1642 described in Appendix 3.8C. It employs the method of numerical integration and solves for natural frequencies, accelerations, overturning moments, and shears.

2. Shell Analyses

Independent dynamic shell analyses of the containment were performed by both CB&I and TVA. The shell model used by CB&I is shown in Figure 3.8.2-12. The method of analysis involves a numerical integration technique operating on the governing differential equations. Linear behavior and axisymmetric geometry were assumed. The total transient response was calculated by the sum of the harmonic responses with the input loads being represented by Fourier Series. A full explanation of the method is given in reference [1]. A number of CB&I proprietary programs, all described in Appendix 3.8C, were employed to arrive at the final shell responses. Figure 3.8.2-13 is a flow diagram of the analysis process with a brief description of the function accomplished by each computer program. CB&I program 1624 (also in Appendix 3.8C) calculated acceleration response spectra at various elevations and azimuths from the acceleration histories.

TVA performed an independent shell analysis of the transient pressure response. A finite element model was used and the solution calculated by numerical integration. The agreement with the CB&I analysis was good. Since the TVA shell analysis was merely a check on the CB&I analysis, full documentation of the process and the programs used are not included herein.

The pressures were factored by 1.45 for computing responses to be used to ensure compliance with the buckling criteria in Appendix 3.8B. A factor of 1.80 was used in the design of the anchorage (See Section 3.8.2.4.8).

3.8.2.4.5 Thermal Analysis

A thermal analysis was performed on the containment for a loss-of-coolant accident. The shell temperature transients due to a double end rupture of a reactor coolant pipe are described in Appendix 3.8A. The tolerable temperature rise for the steel containment is well above the temperatures shown, as the steel shell was designed for the basic stress limits of Section NB-3221 and Section NB-3222.2 of the ASME Boiler and Pressure Vessel Code, Section III, for ASME SA-516, grade 70 steel at 300°F.

Also, as seen by these curves, the containment shell will experience an unbalanced temperature loading for the three compartments. The temperature difference between any two adjacent points on the vessel is held within the limits of Section NB-3222.4 of the code.

3.8.2.4.6 Penetrations Analysis

The vessel manufacturer is responsible for the design of the steel containment including the reinforcement required at the penetrations. The specifications required the manufacturer to submit all preliminary design calculations for TVA's review before any material was detailed or fabricated.

Also, TVA performed an independent analysis of the steel containment, including the reinforcement required at penetrations.

Secondary and local stresses at penetrations subjected to applied loads were analyzed by CB&I programs 1027 and 1036 which are described in Appendix 3.8C. These programs employ the methods of the Welding Research Council Bulletin No. 107 in the analysis of the containment shell.

Penetrations not subjected to applied loads were designed in accordance with Section NE-3332 of Section III, ASME Code. Most penetrations were preassembled into the containment vessel shell plates and stress relieved prior to installation of the plate into the containment vessel shell. All other penetrations were installed in insert plates of the same thickness as the shell plates and stress relieved as assemblies. As a result, no reinforcement is provided in excess of that available in the shell and neck. Large penetrations, such as the large equipment hatch and personnel access locks, require stiffeners for reinforcement.

The penetrations subjected to external loads are supplied with pipe of sufficient wall thickness to resist these loads. Where one or more externally loaded penetrations are in close proximity to another externally loaded penetration, the shell was analyzed for the interactive effects of these loaded penetrations.

The external loads were assumed to be reversible and the maximum stress combination was determined. Seismic loads were provided for penetrations that do not require bellows. Seismic loads for penetrations requiring bellows and nonprocess penetrations were assumed to be equal to the dead loads. Since pressure affects the design of the penetrations, a pressure equal to the internal design pressure is considered to act in conjunction with the externally applied loads.

Figure 3.8.2-16 shows the stresses assumed to be present in the analysis of the shell in the vicinity of the penetrations. These assumed stresses, which are due to internal containment pressure, are added to the stresses resulting from the externally applied loads before determining the stress intensities. The assumed stresses are employed as shown in Figure 3.8.2-16 for most of the penetrations. However, it is permissible to reduce these initial stresses when the penetration is provided with greater reinforcement than is required by Section III. At the point of intersection of the shell and penetration, a factor equal to the ratio of the area required for reinforcement within the two-thirds limit to the area available for reinforcement may be used to reduce the assumed initial stresses. At points in the shell away from this intersection, the factor becomes the ratio of required shell thickness to actual shell thickness. This reduction method was used on penetrations which were over-stressed when the assumed initial stresses used were as shown in Figure 3.8.2-14. While the factor for all penetrations using this method was less than 0.5, the minimum factor used in the analysis was 0.5.

The neck of the penetration was analyzed using CB&I program 1392, described in Appendix 3.8C. This program computes the stresses in the neck at two points. The first point is located at a distance from the shell that is outside the normal limits for area replacement. The stresses at this point are due to the external loads and to the containment design pressure acting within the pipe. The second point is located within the area considered for area replacement. In addition to the stresses due to external loads and containment pressure, an assumed stress is also included. This assumed stress is as outlined above at the point of intersection of the shell and penetration and may be modified as discussed above. Permanent caps for spare penetrations are designed in accordance with ASME rules. Flanged penetrations are provided with double gasket details which permit the testing of the gaskets by pressurizing the air space between the gaskets.

3.8.2.4.7 Interaction of Containment and Attached Equipment

Some items rigidly attached to the containment respond in a non-rigid manner due to the local flexibility of the containment. This effect was analyzed for a number of penetrations and other attachments, but was found to be significant only for the equipment hatch and the two personnel locks.

The following procedure was followed in the analyses:

1. Linear and rotational mass moments of inertia were calculated in the radial, circumferential, and longitudinal directions. (The rotational degrees-of-freedom were considered because the centers of mass did not lie in the plane of the containment shell).

2. The local stiffnesses of the hatch and locks were calculated for the above degrees-of-freedom. A method developed by Bijlaard, [2], was used.

3. The periods of vibration were calculated for motions in the radial (push-pull) direction, and in the circumferential and longitudinal (swinging) directions by the equation:

$$T = 2\pi\sqrt{\frac{I_o}{K}}$$

where I_o and K are the mass moments of inertia and stiffnesses, respectively.

4. The response accelerations for seismic excitation and the pressure transients were taken from the spectra described in Sections 3.8.2.4.2 and 3.8.2.4.3, respectively.

5. The total structural response was found by the sum of the effects of the seismic, pressure transient, and dead weight loads.

All of the above calculations were performed by hand. The periods of vibration of the equipment hatch and the personnel locks in the three principal directions were all greater than 0.03 seconds, which is used as the demarcation between rigid and non-rigid vibration.

3.8.2.4.8 Anchorage

The containment vessel anchorage system consists of anchor bolts, an embedded anchor plate, and an anchor bolt bearing ring which attaches to the first shell ring. Details of the anchorage are shown in Figure 3.8.2-2.

Two rows of 3-1/2 inch anchor bolts are provided with one row on the outside of the shell and one row on the inside of the shell. The bolts in each row are spaced at two degrees and located in pairs on radial lines. The rows are located at equal distances from the center line of the shell.

The anchor bolts are embedded in the concrete to the maximum depth available. The majority of the bolts are embedded to a depth such that the lowest point on the bolts is slightly above Elevation 687.0. The remainder of the anchor bolts, located in the area of the pipe sleeves which extend from the penetration for the containment sump, are embedded with their lowest points at Elevation 689.3 being slightly above the sleeves. An embedded anchor plate at the lower end of the bolts is provided to transfer the bolt load to the concrete. The design of the bolt is based on using an allowable stress of 2 x Sm. Allowable stresses in the concrete are based on an ultimate strength of 5000 psi.

Loads considered in the design consist of dead loads, seismic loads, and NASPL loads. The NASPL loads have been increased by 80 percent for the design of the anchorage.

The anchor bolts were pretensioned during construction to assure fixity of the base during an operating accident. Since the concrete is subject to creep over a period of time, the effects of creep were calculated and bolt preload was increased accordingly. The initial bolt strain was calculated based on this preload.

The embedded anchor plate is a ring designed to transfer the bolt loads to the concrete. The design assumed that the ring is discontinuous at points midway between bolts. This approach permits the butts in the ring to be unwelded.

The tensile loads in the shell are greater than the compressive loads. Since the bolts are preloaded, the effect is that the anchorage is placed in compression. As a result, the anchorage system was designed for the bolt preload plus the compressive shell load.

3.8.2.5 Structural Acceptance Criteria

3.8.2.5.1 Margin of Safety

A certified stress report was prepared by CBI for the vessel in accordance with the requirements of the ASME Code. This report contains several hundred pages and therefore is not included in this report.

Design values for transient pressure loads were determined by multiplying the calculated values by 1.45 as described in Section 3.8.2.3.1. The buckling criteria, in Section 5 of Appendix 3.8B, requires a load factor of 1.25 in addition to this.

Nonpressure parts such as walkways, handrail, ladders, etc., were designed in accordance with AISC "Manual of Steel Construction," seventh edition, so that the stress in the members and welds do not exceed the allowable stress criteria as set forth in the February 1969, AISC "Specifications for Design, Fabrication, and Erection of Structural Steel for Buildings." The factor of safety of these allowable stresses with respect to specified minimum yield points of the material used are as defined in Section 1.5 of "Commentary on the Specifications for the Design, Fabrication, and Erection of Structural Steel for Buildings."

Local areas, such as the personnel and equipment hatch areas, were checked for deformations to avoid a resonant condition. The vessel as a whole was not designed to deformation limits.

Shutdowns and startups do not occur with a frequency to require a design for fatigue failure. The number of load cycles will not affect the containment vessel service life.

The stability of the containment vessel was evaluated by the criteria of Appendix 3.8B. This criteria is applicable to stiffened circular and spherical shells and independent panels. A factor of safety was used in the design related to buckling. Loading conditions which included Safe Shutdown Earthquake used a factor of safety of 1.1. The factor of safety for external pressure was provided by the ASME Code. The factor of safety for all other loading conditions was 1.25.

3.8.2.6.1 Materials - General

Materials for the containment vessels, including equipment access hatches, personnel access locks, penetrations, attachments, and appurtenances meet the requirements of the following specifications of the issue in effect on the date of invitation for bids. Impact test requirements were as specified in the ASME Boiler and Pressure Vessel Code, Section III for maximum test metal temperature of 0°F. Charpy V-notch specimens, SA-370, type A, were used for impact testing materials of all product forms in accordance with the requirements of the ASME Boiler and Pressure Vessel Code, Section III. In order to provide for loss of impact properties during fabrication, all materials were either furnished with an adequate test temperature margin below the minimum NDT temperature, or the specified minimum values were effectively restored by heat treatment in accordance with ASME Code requirements.

Material Designations