# EXELON NUCLEAR

# STANDARDIZED RADIOLOGICAL EMERGENCY PLAN

# Table of Contents

**Section** **Page**

**Part I: INTRODUCTION**

Section A: Purpose ..... Part 1, 1
Section B: Background ..... Part 1, 2
Section C: Scope ..... Part 1, 2
Section D: Planning Basis ..... Part 1, 3
Section E: Contiguous - Jurisdiction Governmental Emergency Planning ..... Part 1, 3
Section F: Integrated Emergency Planning ..... Part 1, 3
Section G: Funding and Technical Assistance ..... Part 1, 3
Section H: Emergency Response Organization ..... Part 1, 3
Section I: Federal Response ..... Part 1, 4
Section J: Form and Content of Plan ..... Part 1, 4

---

**Part II: PLANNING STANDARDS AND CRITERIA**

**Section A: Assignment of Responsibility ..... 1**

1. Concept of Operations ..... 1
2. State and County Functions and Responsibilities ..... 12
3. Agreements in Planning Effort ..... 12
4. Continuous Coverage ..... 12

**Section B: Exelon Nuclear Emergency Response Organization ..... 1**

1. On-Shift Emergency Response Organization Assignments ..... 1
2. Authority Over the Emergency Response Organization ..... 2
3. Criteria for Assuming Command and Control (Succession) ..... 2
4. Non-Delegable Responsibilities ..... 3
5. Emergency Response Organization Positional Responsibilities ..... 4
6. Exelon Emergency Response Organization Block Diagram ..... 33
7. Exelon Corporate Emergency Response Organization ..... 33
8. Industry/Private Support Organizations ..... 34
9. Supplemental Emergency Assistance to the ERO ..... 37

**Section C: Emergency Response Support and Resources ..... 1**

1. Federal Response Support and Resources ..... 1
2. Liaisons ..... 1
3. Radiological Laboratories ..... 2
4. Other Assistance ..... 2

# Table of Contents

**Section** **Page**

**Section D: Emergency Classification System ..... 1**

1. Emergency Classification System ..... 1
2. Emergency Action Level Technical Bases ..... 5
3. Offsite Classification Systems ..... 6
4. Offsite Emergency Procedures ..... 6

**Section E: Notification Methods and Procedures ..... 1**

1. Bases for Emergency Response Organization Notification ..... 1
2. Notification and Mobilization of Emergency Response Personnel ..... 1
3. Initial Notification Messages ..... 3
4. Follow-up Messages ..... 4
5. State and County Information Dissemination ..... 4
6. Notification of the Public ..... 4
7. Messages to the Public ..... 5

**Section F: Emergency Communications ..... 1**

1. Communications/Notifications ..... 1
2. Medical Communications ..... 4
3. Communications Testing ..... 4

**Section G: Public Education and Information ..... 1**

1. Public Information Publication ..... 1
2. Public Education Materials ..... 1
3. Media Accommodations ..... 1
4. Coordination of Public Information ..... 3
5. Media Orientation ..... 3

**Section H: Emergency Facilities and Equipment ..... 1**

1. Control Room, Technical Support Center, and Operations Support Center ..... 1
2. Emergency Operations Facility (EOF) ..... 3
3. Emergency Operations Centers ..... 5
4. Activation ..... 5
5. Monitoring Equipment Onsite ..... 6
6. Monitoring Equipment Offsite ..... 9
7. Offsite Monitoring Equipment Storage ..... 10
8. Meteorological Monitoring ..... 10
9. OSC Capabilities ..... 11
10. Facility and Equipment Readiness ..... 11
11. General Use Emergency Equipment ..... 11
12. Collection Point for Field Samples ..... 12

# Table of Contents

**Section** **Page**

**Section I: Accident Assessment ..... 1**

1. Plant Parameters and Corresponding Emergency Classification ..... 1
2. Onsite Accident Assessment Capabilities ..... 1
3. Source Term Determination ..... 1
4. Effluent Monitor Data and Dose Projection ..... 3
5. Meteorological Information ..... 4
6. Unmonitored Release ..... 4
7. Field Monitoring ..... 4
8. Field Monitoring Teams ..... 4
9. Iodine Monitoring ..... 5
10. Dose Estimates ..... 5
11. State Monitoring Capabilities ..... 5

**Section J: Protective Response ..... 1**

1. Notification of Onsite Personnel ..... 1
2. Evacuation Locations ..... 1
3. Radiological Monitoring of Evacuees ..... 1
4. Evacuation ..... 2
5. Accountability ..... 2
6. Provisions for Onsite Personnel ..... 3
7. Mechanism for Implementing Protective Action Recommendations ..... 4
8. Evacuation Time Estimates (ETEs) ..... 4
9. Capability of Implementing Protective Action Recommendations ..... 4
10. Implementation of Protective Action Recommendations ..... 4
11. Ingestion Pathway Protective Measures ..... 6
12. Monitoring of Evacuees ..... 6

**Section K: Radiological Exposure Control ..... 1**

1. Emergency Exposure Guidelines ..... 1
2. Emergency Radiation Protection Program ..... 2
3. Personnel Monitoring ..... 2
4. Non-Exelon Personnel Exposure Authorization ..... 3
5. Contamination and Decontamination ..... 3
6. Contamination Control Measures ..... 3
7. Decontamination of Relocated Personnel ..... 4

**Section L: Medical and Public Health Support ..... 1**

1. Offsite Hospital and Medical Services ..... 1
2. Onsite First Aid Capability ..... 1
3. Medical Service Facilities ..... 2
4. Medical Transportation ..... 2

# Table of Contents

**Section** **Page**

**Section M: Reentry and Recovery Planning ..... 1**

1. Reentry and Recovery ..... 1
2. Recovery Organization ..... 4
3. Recovery Phase Notifications ..... 7
4. Total Population Exposure ..... 7

**Section N: Drill and Exercise Program ..... 1**

1. Exercises ..... 1
2. Drills ..... 2
3. Conduct of Drills and Exercises ..... 4
4. Critique and Evaluation ..... 4
5. Resolution of Drill and Exercise Findings ..... 5

**Section O: Emergency Response Training ..... 1**

1. Assurance of Training ..... 1
2. Functional Training of the ERO ..... 1
3. First Aid Response ..... 2
4. Emergency Response Organization Training Program ..... 2
5. General, Initial, and Annual Training Program Maintenance ..... 6

**Section P: Responsibility for the Maintenance of the Planning Effort ..... 1**

1. Emergency Preparedness Staff Training ..... 1
2. Authority for the Emergency Preparedness Effort ..... 1
3. Responsibility for Development and Maintenance of the Plan ..... 1
4. E-Plan and Agreement Revisions ..... 4
5. E-Plan Distribution ..... 5
6. Supporting Emergency Response Plans ..... 6
7. Implementing and Supporting Procedures ..... 6
8. Cross Reference to Planning Criteria ..... 6
9. Audit/Assessment of the Emergency Preparedness Program ..... 7
10. Maintenance of Emergency Response Facilities (ERF) Telephone Directory ..... 7

# Table of Contents

**Section** **Page**

**Part III: APPENDICES**

Appendix 1: References ..... 1-1
Appendix 2: Procedure Cross-Reference to NUREG-0654 ..... 2-1
Appendix 3: List of Corporate Letters of Agreement ..... 3-1
Appendix 4: Glossary of Terms and Acronyms ..... 4-1

**LIST OF STATION ANNEXES**

The Station Annexes subject to the requirements of this plan are as follows:

EP-AA-1001: Radiological Emergency Plan Annex for Braidwood Station

EP-AA-1002: Radiological Emergency Plan Annex for Byron Station

EP-AA-1003: Radiological Emergency Plan Annex for Clinton Station

EP-AA-1004: Radiological Emergency Plan Annex for Dresden Station

EP-AA-1005: Radiological Emergency Plan Annex for LaSalle Station

EP-AA-1006: Radiological Emergency Plan Annex for Quad Cities Station

EP-AA-1007: Radiological Emergency Plan Annex for Peach Bottom Station

EP-AA-1008: Radiological Emergency Plan Annex for Limerick Station

EP-AA-1009: Radiological Emergency Plan Annex for Three Mile Island

EP-AA-1010: Radiological Emergency Plan Annex for Oyster Creek Station

EP-AA-1011: Radiological Emergency Plan Annex for Victoria County Station

**REVISION HISTORY**

| REVISION | EFFECTIVE DATE | REVISION | EFFECTIVE DATE |
|---|---|---|---|
| 7 | March 1991 | 7L | October 16, 1998 |
| 7A | July 15 1992 | 8 | May 13, 1999 |
| 7B | September 15 1993 | 9 | March 31, 2000 |
| 7C | January 1 1994 | 10 | January 8, 2001 |
| 7D | June 24 1994 | 11 | October 8, 2001 |
| 7E | September 22 1994 | 12 | March 22, 2002 |
| 7F | January 25 1995 | 13 | August 30, 2002 |
| 7G | March 17 1995 | 14 | February 20, 2003 |
| 7H | September 15 1995 | 15 | February 13, 2004 |
| 7I | February 16 1996 | 16 | December 22, 2004 |
| 7J | March 3 1997 | 17 | May 25, 2006 |
| 7K | January 5, 1998 | 18 | October, 2007 |

## Section A: Purpose

As required in the conditions set forth by the Nuclear Regulatory Commission (NRC) for the operating licenses for the Exelon Nuclear Stations, the management of Exelon recognizes its responsibility and authority to operate and maintain the nuclear power stations in such a manner as to provide for the safety of the general public. This document describes the Exelon Nuclear Plant Emergency Preparedness Program. The philosophy that guides the development and maintenance of this program is the protection of the health and safety of the general public in the communities around the nuclear power stations and the personnel who work at the plant.

The Exelon Nuclear Standardized Radiological Emergency Plan (E-Plan) establishes the concepts, evaluation and assessment criteria, and protective actions that are necessary in order to limit and mitigate the consequences of potential or actual radiological emergencies. It has been prepared to establish the procedures and practices for management control over unplanned or emergency events that may occur at an Exelon Nuclear Station. It also provides the necessary pre-arrangements, directions and organization so that all nuclear emergencies can be effectively and efficiently resolved.

The Exelon Emergency Preparedness Program consists of the E-Plan, Station Annexes, emergency plan implementing procedures, and associated program administrative documents. The Exelon E-Plan outlines the basis for response actions that would be implemented in an emergency. Planning efforts common to all Exelon Nuclear stations are encompassed within the E-Plan. This document is not intended to be used as a procedure.

The Station Annexes contain information and guidance that is unique to the station. The annexes address site-specific criteria, including:

- Emergency Action Levels (EALs),
- Deviations from the E-Plan (such as station specific on-shift staffing, unique aspects of ERO augmentation, and so forth).
- Facility geography and location for a full understanding and representation of the station's emergency response capabilities.
- Plant specific facilities and equipment associated with the Emergency Preparedness Program.

The Station Annex becomes a part of the plan and is subject to the same review and audit requirements as the plan. In the areas where a Station Annex deviates from the general requirements of the E-Plan, the Station Annex shall serve as the controlling document.

Detailed E-Plan implementing procedures are maintained separately and are used to guide those responsible for implementing emergency actions.

## Section B: Background

In the context of this E-Plan, the Station Annexes, and implementing procedures, Exelon Nuclear manages the operations of the NRC licensed facilities designated as Braidwood, Byron, Clinton, Dresden, LaSalle, Limerick, Peach Bottom, Quad Cities, Three Mile Island (TMI), Oyster Creek Station, and Victoria County Station.

The primary hazard consideration at the nuclear power stations is the potential unplanned release of radioactive material resulting from an accident. The probability of such a release is considered very low due to plant design and strict operational guidelines enforced by the NRC. Not withstanding, federal regulations require that a solid emergency preparedness program exist for each commercial nuclear power station. A detailed description of each station is given in the Updated Final Safety Analysis Reports (UFSAR).

In order to minimize the number of ad-hoc decisions made during an emergency and to ensure that necessary equipment, supplies, and essential services are available to meet the needs of an emergency, Exelon Nuclear has developed this E-Plan. The E-Plan is applicable to all generating stations operated by Exelon Nuclear listed above and considers the consequences of radiological emergencies, as required by 10 CFR 50, Paragraph 50.47 and Appendix E.

Additionally, the E-Plan addresses guidance and adheres to the intent of the criteria established and provided within NUREG-0654. The E-Plan also considers the consequences of non-radiological emergencies.

## Section C: Scope

This document describes actions to be taken in the event of a radiological accident at the Exelon nuclear stations that may impact the health and safety of the general public or station employees. It also serves to limit the damage to facilities and property, and provide for the restoration of such facilities in the event of an emergency. If such an accident were to occur, the Emergency Response Organization (ERO) would be put in place and maintained until such time where the plant is returned to a stable condition and the threat to the general public or station personnel no longer exists. This plan describes the functions and operation of the ERO, including assignments of authority and responsibility. It does not, nor is it intended to, provide guidance for actual plant equipment manipulations. These instructions are contained in site-specific normal and emergency operating procedures as required by Technical Specifications and other regulatory guidance. The E-Plan provides for: identification and evaluation of emergency situations, protective measures, communications, coordination and notification of governmental authorities, document review and control, emergency preparedness assessment, and training of all emergency personnel. An emergency recovery phase is also described in this E-Plan.

## Section D: Planning Basis

The E-Plan, in conjunction with the Station Annexes and implementing and administrative procedures, documents the methods by which the Exelon Emergency Preparedness Program meets the planning standards set forth in 10 CFR 50.47(b) and the requirements of 10 CFR 50 Appendix E. Development of the E-Plan was based on NUREG-0654/FEMA-REP-1, Revision 1, "Criteria for Preparation and Evaluation of Radiological Emergency Response Plans and Preparedness in Support of Nuclear Power Plants."

Acceptable alternate methods, which deviate from NUREG-0654, are allowed under Regulatory Guide 1.101, “Emergency Planning and Preparedness for Nuclear Power Reactors.” However, deviations will be documented in the respective Station Annexes and evaluated as continuing to meet the Planning Standards of 10 CFR 50.47(b) and Appendix E to 10 CFR 50 under the 10 CFR 50.54(q) process to ensure the continued effectiveness of the E-Plan and respective Station Annexes.

Other applicable regulations, publications, and guidance were used (see Appendix 1, "References") along with site-specific documents to ensure consistency in the planning effort.

## Section E: Contiguous-Jurisdiction Governmental Emergency Planning

The E-Plan recognizes the state, in cooperation with the local EPZ communities, as the overall authority responsible for protective action directives in order to protect the health and safety of the general public.

## Section F: Integrated Emergency Planning

State and local (county level) emergency response plans were utilized in the development of this plan to ensure a consistent and integrated response to a classified event.

## Section G: Funding and Technical Assistance

Exelon Nuclear is dedicated to providing the level of support necessary, as dictated by federal regulation, to ensure appropriate integration of the state, county, and utility radiological emergency programs.

## Section H: Emergency Response Organization

Exelon Nuclear acknowledges its primary responsibility for planning and implementing emergency measures within the site boundary and for overall plant accident assessment. These emergency measures include corrective actions, protective measures, and aid for personnel onsite. To accomplish these responsibilities, advance arrangements have been made with offsite organizations for special emergency assistance such as ambulance, medical, hospital, fire, and police services.

## Section I: Federal Response

Provisions are made within the E-Plan for the integration of appropriate elements of the federal assistance activities. Arrangements have been made to accommodate a federal response organization presence the Exelon Nuclear emergency response facilities as well as support communications between utility and federal emergency facilities. NRC response as described in NUREG-1471, "Concept of Operations: NRC Incident Response", was used in the development of the E-Plan as guidance to ensure coordination between Exelon Nuclear and NRC EROs.

## Section J: Form and Content of Plan

As required by federal regulations, the E-Plan is governed by and contained (or referenced) in the Station UFSARs. The E-Plan is administratively maintained as a separate document. The E-Plan has been formatted similar to NUREG-0654/FEMA-REP-1, Revision 1, "Criteria for Preparation and Evaluation of Radiological Emergency Response Plans and Preparedness in Support of Nuclear Power Plants." The use of this format lends itself to uncomplicated comparison with the criteria set forth in NUREG-0654/FEMA-REP-1.

Appendix 2, "Procedure Cross-Reference to NUREG-0654," provides a cross-reference between the NUREG-0654 evaluation criteria and the E-Plan implementing procedures and applicable administrative documents.

### Required Content of the Station Annexes

Information that is in the plan need not be restated in the Annex. The Annex shall address what means, methods, and resources are used to satisfy the requirements and responsibilities set forth in the E-Plan.

Annex Format and Specific Content: As a minimum, station Annexes shall address the areas described as follows:

1. Section 1: Introduction

   The station and surrounding area are described by the inclusion of maps, drawings and/or diagrams. A summary statement describes the Annex's interface with the E-Plan.

2. Section 2: Organizational Control of Emergencies

   The agencies with which the station has independent agreements for support during an emergency are provided. Station specific differences from the E-Plan, such as on-shift staffing or ERO augmentation, shall be outlined. The justification for differences shall be provided as required under 50.54(q) documentation.

3. Section 3: Classification of Emergencies

   Site Specific EALs are included for all emergency classes for the purpose of event classification.

4. Section 4: Emergency Measures

   Maps indicating the location of Assembly Areas, site evacuation routes, and centers for the monitoring of evacuated nonessential personnel are included. Roadway/traffic control measures of roads under control of the station are addressed.

5. Section 5: Emergency Facilities and Equipment

   - Descriptions of the station Control Room, Technical Support Center and Operational Support Center are provided.
   - A description of the specific equipment is provided.
   - A description of the capability and resources available to categorize accidents.

## Section A: Assignment of Responsibility

This section describes the primary responsibilities and organizational control of Exelon, federal, state, county, and other emergency response organizations within the Plume Exposure Pathway and the Ingestion Pathway Emergency Planning Zones (EPZs). Various supporting organizations are also described as well as staffing for initial and continuous response.

### 1. Concept of Operations

The relationships and the concept of operations for the organizations and agencies who are a part of the overall ERO are as follows:

a. Identified below are federal, state, and county organizations that are involved in a response to an emergency at an Exelon nuclear power station.

1) Federal Agencies: The National Response Plan (NRP), Nuclear/Radiological Incident Annex outlines the statutory and regulatory responsibilities. The primary federal response for supporting an emergency at an Exelon station include:

a) Nuclear Regulatory Commission (NRC): The NRC is responsible for licensing and regulating nuclear facilities and materials and for conducting research in support of the licensing and regulatory process. These responsibilities include protecting the public health and safety, protecting the environment, protecting and safeguarding materials and plants in the interest of national security and assuring conformity with antitrust laws.

The NRC Regional Office has the responsibility for auditing of nuclear power stations. It is responsible for ensuring that such activities are conducted in accordance with the terms and conditions of such NRC licenses and that as a result of such operations, there is no undue risk to the health and safety of the public.

The NRC Office of Nuclear Reactor Regulation, established by the Energy Reorganization Act of 1974, as amended, performs licensing functions associated with the construction and operation of nuclear reactors and with the receipt, possession, ownership, and use of special nuclear and byproduct materials used at reactor facilities.

With regard to emergency preparedness, the NRC shall:

- Assess licensee emergency plans for adequacy;
- Review the Federal Emergency Management Agency findings and determinations on the adequacy and capability of implementation of state and local plans; and
- Make decisions with regard to the overall state of emergency preparedness and issuance of operating licenses.

The NRC shall respond to incidents at licensed facilities or vehicular accidents involving licensed materials, including radionuclides, in transit. The NRC shall act as the lead Federal agency with regard to technical matters during a nuclear incident including radiological assistance. The NRC shall be prepared to recommend appropriate protective actions for the public and technical actions to the licensee. FEMA shall act as the lead Federal agency for offsite, non-technical concerns.

During an incident, the Chairman of the Commission is the senior NRC authority for all aspects of a response. The Chairman shall transfer control of emergency response activities to the Director of Site Operations when deemed appropriate by the Chairman.

All NRC Regions as well as Headquarters are prepared to respond to potential emergencies. All Regions and Headquarters have developed plans and procedures for responding to radiological incidents involving NRC licensees. Headquarters has developed the NRC Incident Response Plans and Implementing Procedures. Each NRC Region has developed Regional Supplements that detail how the Region will fulfill all of the responsibilities assigned in the NRC Incident Response Plan. All NRC organizations are responsible for maintaining an effective state of preparedness through periodic training, drills and exercises.

Each Region and Headquarters has established and maintains an Incident Response Center designed to centralize and coordinate the emergency response function. Adequate communications are established to link the licensee, Headquarters and the Region. The NRC has established lines of communications with local government, state government, other Federal agencies, Congress and the White House. Public information will be disseminated in a timely manner and periodically.

Each Region is prepared to send a team of qualified specialists to the scene expediently. All of the necessary supplies and equipment needed for emergency response will be provided and maintained by the NRC.

The NRC Incident Response Plan objectives are to provide for protection of the public health and safety, property, and the environment, from the effects of radiological incidents that may occur at licensed facilities or which involve licensed materials, including radio-nuclides in transit.

The objectives of the agency plan set forth the organizational and management concepts and responsibilities needed to assure that NRC has an effective emergency response program.

The plan is intended to ensure NRC preparedness:

- To receive and evaluate notification information of incidents, accidents and unusual events and determine the extent of NRC response necessary to meet NRC responsibilities for mitigating the consequences of these events;

- To determine the cause of incidents, accidents, and unusual events in order to ensure that appropriate corrective actions are taken by the licensee to minimize the consequences of these events;

- To provide onsite expertise in a timely manner, to evaluate the nature and extent of the incident, ascertain plant status (for reactors and fuel facilities), monitor licensee activities, determine compliance, make recommendations, and, if necessary, issue orders relative to the event;

- To inform the public and others of plant status and technical details concerning the incident;

- To recommend adequate protective actions to the responsible local and/or state agencies;

- To provide technical assistance;

- To ensure the plant is returned to a safe condition; and

- To return the NRC Headquarters and Regional office to normal operations.

b) Federal Emergency Management Agency (FEMA): Per the National Response Plan (NRP), FEMA is responsible for the overall coordination of a multi-agency Federal response to a significant radiological incident. The primary role of FEMA is to support the state by coordinating the delivery of Federal non-technical assistance. FEMA coordinates state requests for Federal assistance, identifying which Federal agency can best address specific needs. If deemed necessary by FEMA, it will establish a Federal Response Center from which it will manage its assistance activities.

c) Federal Radiological Preparedness Coordinating Committee (FRPCC): The FRPCC consists of the Federal Emergency Management Agency, which chairs the Committee, the Nuclear Regulatory Commission, the Environmental Protection Agency, the Department of Health and Human Services, the Department of Energy, the Department of Transportation, the Department of Defense, the Department of Agriculture, the Department of Commerce, and where appropriate and on an ad hoc basis, other Federal departments and agencies. The FRPCC shall assist FEMA in providing policy direction for the program of Federal assistance to state and local governments in their radiological emergency planning and preparedness activities.

d) U.S. Department of Energy (DOE): The Department of Energy (DOE) has extensive radiological monitoring equipment and personnel resources that it can assemble and dispatch to the scene of a radiological incident. The Department of Energy (DOE) local operations office can assist Exelon Nuclear following a radiological incident as outlined in the Federal Radiological Monitoring and Assessment Plan (FRMAP). If Exelon Nuclear, the NRC or the affected states deem that assistance from DOE is necessary or desirable, the affected state(s) would notify the appropriate DOE operations office.

e) Environmental Protection Agency (EPA): Assists with field radiological monitoring/sampling and non-plant related recovery and reentry guidance.

f) The U.S. Coast Guard (USCG): The USCG patrols and ensures the safety of navigable waterways in the United States. The USCG is promptly notified of any oil or hazardous substance discharges into rivers or lakes or radioactive contamination of rivers or lakes under its jurisdiction at levels requiring assistance to effect protective actions. The USCG is contacted by the appropriate state agencies in the event of an incident at an applicable nuclear power plant. The USCG is responsible for officially closing the waterways to all commercial traffic [Refer to the appropriate State Plan].

g) U.S. Army Corps of Engineers: The U.S. Army Corps of Engineers control barge and boat traffic at locks and dams on navigable waterways in the United States. The Corps of Engineers will be contacted by the appropriate state agencies in the event of an incident at an applicable nuclear power plant. The Corps will be responsible for closing their locks and dams to all waterway traffic leading to the affected area, allowing only traffic leaving the area [Refer to the appropriate State Plan].

h) Federal Bureau of Investigation (FBI): Support from the FBI is available through its statutory responsibility based in Public Law and the US code, and through a memorandum of understanding for cooperation with the NRC. Notification to the FBI of emergencies in which they would have an interest will be through provisions of the Nuclear Station's Security Plan, or by the NRC.

i) National Weather Service (NWS): Provides meteorological information during emergency situations, if required. Data available will include existing and forecasted wind directions, wind speed, and ambient air temperature.

2) State Agencies

a) The State of Illinois: The State of Illinois has the statutory responsibility and authority for protecting the health and safety of the public in Illinois. The State of Illinois has developed an "Illinois Plan for Radiological Accidents" (IPRA). This plan was developed in accordance with the guidance suggested by NUREG-0396 and NUREG-0654/FEMA-REP-1, Rev. 1. The IPRA has received 44 CFR 350 unconditional approvals from FEMA for all Exelon Nuclear's generating stations in the state of Illinois. Basic descriptions for the Illinois state agencies responsible for actions in the event of a nuclear power station are as follows:

- Governor of the State of Illinois: The Governor of the State of Illinois has overall command authority for both the radiological and non-radiological aspects of a nuclear incident. The Governor shall make the final recommendation for protective actions and shall serve as the state's primary spokesperson.

- Illinois Emergency Management Agency (IEMA): IEMA coordinates the operational response and recovery functions of all State agencies. IEMA proposes Protective Action Recommendations (PARs) to the Governor. IEMA also coordinates the implementation of the Governor's PARs.

  IEMA has the responsibility to inform the State of Indiana State Emergency Management Agency (SEMA) with respect to an emergency event at Dresden or Braidwood Nuclear Power Station and the State of Wisconsin Department of Emergency Government (WDEG) with respect to an emergency event at Byron Nuclear Power Station that impacts the 50-mile Ingestion Pathway Zone.

  IEMA Technical has both the command authority for radiological aspects of a nuclear incident and the responsibility for performing various radiological functions. These functions include milk, water and food control, radiation exposure control for state emergency workers, and confirmatory accident assessment. During an emergency situation, IEMA Technical shall make protective action recommendations to the Governor.

  For events that impact the 50-mile ingestion pathway for Braidwood or Dresden Nuclear Power Station, IEMA Technical will coordinate technical information with the State of Indiana. For Byron Nuclear Power Station, IEMA Technical will coordinate technical information with the State of Wisconsin.

  The IEMA Technical response to a nuclear incident utilizes two functional subgroups. They are the Radiological Emergency Assessment Center (REAC) and the Radiological Assessment Field Team (RAFT).

- Radiological Emergency Assessment Center (REAC): IEMA has established REAC in Springfield Illinois. REAC will serve as the command location for all (State related) radiological aspects of a nuclear incident. The Manager of the Office of Nuclear Facility Safety, or his/her designated alternate, is in command of REAC.

- Radiological Assessment Field Team (RAFT): RAFT has been organized to perform the field radiological functions of confirmatory accident assessments during a nuclear emergency. RAFT includes a Mobile Command Center, a Mobile Nuclear Laboratory, and monitoring and sampling teams.

b) The State of Iowa: Much of the Emergency Planning Zone for the Quad Cities Nuclear Station lies within the State of Iowa. The State of Iowa has developed an "Iowa Emergency Plan". This section provides a summary of the essential elements of the Iowa Emergency Plan, specifically outlining the specific responsibilities of certain "key" Iowa State Agency players in a response operational mode. Basic descriptions for the Iowa state agencies responsible for actions in the event of a nuclear power station are as follows:

- Iowa Emergency Management Division (IEMD): IEMD coordinates all activities of State agencies and departments, all local governments, and the utility in support of emergency response activities. These activities are coordinated from the Iowa State EOC in Des Moines.

- The Iowa Commissioner of Public Health, or his/her designee, from the Iowa Department of Public Health: The Iowa Department of Public Health shall alert the State Hygienic Lab when emergency action conditions are reported by a commercial nuclear power reactor, which impacts upon the public health and safety in Iowa, and when emergency team response has been determined to be necessary or imminent. They shall perform necessary calculations and evaluate the impact of existing and projected radioactivity releases in terms of public health risk. They shall translate the evaluation of existing and projected environmental contamination and resulting dose into terms of alternative protective actions. They shall recommend appropriate protective actions to the Governor's Office, the Iowa Emergency Management Division and other State agencies as appropriate.

- University Hygienic Lab (UHL): The UHL, located in Iowa City, Iowa, conducts and coordinates all field surveillance and monitoring activities directed toward measuring radiation exposure and radioactivity contamination in the environment resulting from an accident at a commercial nuclear power reactor. They also communicate all relevant data and protective action recommendations to the State Department of Public Health, provide radiological laboratory support for environmental samples analysis, and provide recommendations for decontamination of contaminated area.

c) The State of Wisconsin: A portion of the 50-mile Ingestion Pathway Emergency Planning Zone for Byron Nuclear Power Station lies within the State of Wisconsin. The State of Wisconsin has developed a "State of Wisconsin Peacetime Radiological Emergency Response Plan." This section provides a summary of the essential elements of the Wisconsin emergency plan.

Initially, responsibility for responding to a radiological emergency, including evacuation, rests with local governments and their emergency services. Notification, by either local authorities or legal possessors of uncontrolled materials, to the Wisconsin Emergency Management (WEM) that a radiological emergency exists will bring in the resources of the Department of Health and Family Services, Radiation Protection Unit to assess and evaluate the situation and determine protective action. State agency notification for assistance and coordination of response operations of the state agencies in support of local government will be performed by the WEM as determined by the Governor.

- Wisconsin Emergency Management (WEM): WEM is to provide the principal support response to emergencies in the State of Wisconsin, coordinate the responses of other state agencies, brief the Governor of emergency situations and activate the State Emergency Operating Center in Madison, if necessary.

- Department of Health and Family Services (DHFS), Radiation Protection Unit: For peacetime radiological emergencies, the DHFS has designated the Chief of the Radiation Protection Unit as the State Radiological Coordinator (SRC) for the State Radiological Response (RAD RESP) Team. Team members are personnel of the section, as designated by the SRC, augmented by selected personnel from WEM and other state and local agencies trained specifically for radiological incidents.

  Environmental sampling conducted by the State of Wisconsin following a serious radiological emergency will be coordinated from the Madison EOC by the SRC or his/her designated alternate.

The State of Wisconsin utilizes guidance promulgated by the EPA and the U.S. Department of Health and Human Services as the basis for determining what protective actions are necessary during a radiological incident.

d) The State of Indiana: Portions of the 50-mile Ingestion Pathway Emergency Planning Zones for Braidwood and Dresden Nuclear Power Stations lie within the State of Indiana. The State of Indiana has developed an emergency response plan. Appendix 1 – Ingestion Pathway, to Annex L – Radiological Protection of the plan provides the essential elements of Indiana's response to an event affecting the station's Ingestion Pathway Emergency Planning Zones. IEMA will coordinate technical information as necessary with the State of Indiana.

e) The Commonwealth of Pennsylvania: The Commonwealth organizations having prime responsibility in matters of radiation hazards are the Pennsylvania Emergency Management Agency and the Bureau of Radiation Protection (BRP) of the Pennsylvania Department of Environmental Protection.

- Pennsylvania Emergency Management Agency: Responsibilities of PEMA are outlined in Annex E, "Radiological Emergency Response to Nuclear Power Plant Incidents" of the Commonwealth of Pennsylvania Emergency Operations Plan. PEMA is the primary State agency to interface with FEMA. Any BRP requests for non-technical assistance from FEMA are coordinated through PEMA.

- Department of Environmental Protection, Bureau of Radiation Protection (DEP/BRP): Responsibilities of DEP/BRP are outlined in Annex E of the Commonwealth of Pennsylvania Emergency Operations Plan.

- Pennsylvania State Police: Responsibilities of the State Police are set forth in Annex E of the Commonwealth of Pennsylvania Emergency Operations Plan.

f) The State of Maryland: Maryland state organizations having prime responsibility in matters of radiation hazards are the Maryland Emergency Management Agency and the Emergency Operations and Technical Support Program of the Maryland Department of the Environment. County and local governments are responsible for the protection of public health and safety within their jurisdiction.

- Maryland Emergency Management Agency (MEMA): MEMA responsibilities are outlined in Annex Q, " Radiological Emergency Plan."

- Maryland Department of the Environment, Emergency Operations and Technical Support Program: Responsibilities of MDE Emergency Operations and Technical Support Program are outlined in Annex Q, "Radiological Emergency Plan."

- Maryland State Police: Responsibilities of the State Police are set forth in Annex Q, "Radiological Emergency Plan."

g) State of Delaware: The State of Delaware border is located within the 50-mile Ingestion Pathway Zone for Limerick and Peach Bottom Stations. The State would be notified if protective actions were required within that area. No direct support is provided to Limerick or Peach Bottom.

h) State of New Jersey: The state of New Jersey, through the various state, county and local agencies, is responsible for offsite emergency response. In order to fulfill this responsibility, the state relies on OCGS to provide necessary information on plant status and radiation releases. Recognizing the joint nature of their responsibilities, OCGS and the relevant governmental agencies have coordinated their emergency planning and have provided for adequate and redundant communication systems to coordinate their response during an emergency event.

The New Jersey State Police, Office of Emergency Management, is responsible to coordinate emergency services in the State of New Jersey.

- New Jersey Office of Emergency Management: The New Jersey Office of Emergency Management (OEM) has been assigned the responsibility for developing a statewide radiation emergency response plan. Annex B to the State of New Jersey Radiological Emergency Response Plan serves as a reference document incorporating the policy, the concept of operation, the rationale for chosen guidelines, and the relevant statutory documents.

  The OEM is the lead agency and coordinates the efforts of all state support agencies, including actions and operations involving public response and furnishes resources required to support decisions affecting exposure control.

  This agency initiates communications with county and municipal authorities through the County Emergency Management Coordinator. Ocean County and each municipality have contingency plans indicating actions to be taken upon notification of an emergency condition by the OEM.

  Primary contact with state authorities is through the New Jersey State Police OEM and the Headquarters Communications Bureau. This office is responsible for notifying other State and federal agencies and for providing assistance to state and local authorities in implementing emergency actions.

The Emergency Operations Center (EOC) for the New Jersey State Police is located at the State Police Division Headquarters in West Trenton, NJ.

- New Jersey Department of Environmental Protection, Bureau of Nuclear Engineering: The Bureau of Nuclear Engineering (BNE) is responsible for responding to a radiation incident within state boundaries. They will assess the radiological hazard and provide technical guidance and recommendations concerning the execution of protective actions for the general public.

  The BNE maintains personnel, facilities and equipment to assist in assessing the hazard and provide technical guidance and recommendations regarding the implementation of protective actions for the general public. The BNE perform both routine and emergency environmental monitoring.

The State of New Jersey's border is located within the 50-mile Ingestion Pathway Zone for Limerick, and Peach Bottom Stations. The State will be notified if protective actions are required within that area. No direct support is provided to Limerick or Peach Bottom Stations.

i) State of Texas: The State of Texas organizations having prime responsibility in matters of radiation hazards are the Department of State Health Services and the Governor's Division of Emergency Management.

- Department of State Health Services (DSHS) – DSHS has the primary response responsibility as set forth in the State of Texas Emergency Management Plan Annex D, Radiological Emergency Management.

- The Governor's Division of Emergency Management (GDEM) – Through the State Operations Center (SOC), GDEM supports DSHS and coordinates local, state, and federal emergency management activities in accordance with the State Emergency Management Plan.

3) County Government Agencies

Exelon and the surrounding communities that comprise the Plume Exposure Pathway EPZs have developed integrated emergency response programs that call upon the resources of their community. The community organizations are responsible for implementing and coordinating the community response to an emergency.

The County Emergency Operations Centers (EOCs) serve as the primary coordinating center for local government response within the county's jurisdiction and for coordination between counties.

b. During an event classified as an Alert, Site Area Emergency, or General Emergency, the Exelon Nuclear ERO replaces the normal plant organization. The Exelon Nuclear ERO consists of three major response sub-organizations:

1) The Station Organization, directed by the Station Emergency Director, provides for:

- Control and operation of the plant.
- Mitigation of the emergency condition.
- Protection of station personnel.
- Emergency event classification.
- Notification of the appropriate individuals and agencies prior to EOF taking Command and Control.
- Emergency support for operations, engineering, maintenance, fire fighting, material acquisition, security, and first aid.

2) The Corporate Organization, directed by the Corporate Emergency Director, provides for:

- Emergency notifications to Federal, state and local agencies.
- Offsite radiological accident assessment and Protective Action Recommendations to offsite authorities.
- The primary interface between Exelon Nuclear and outside organizations responsible for the protection of the public.

3) The Public Information Organization, directed by the Corporate Spokesperson, coordinates with public information officers from other organizations to provide information to the public through the news media.

c. Interrelationships between major Exelon Nuclear organizations and sub-organizations in the total response effort are illustrated in a block diagram in Figures A-1 and A-2. For a more detailed diagram of the Exelon Nuclear ERO, see Figures B-1a to B-1d.

d. The Corporate Emergency Director is a senior Exelon employee with overall responsibility for coordinating emergency response actions in support of the affected Exelon Nuclear station, Emergency Public Information Organization, and affected state(s) and local agencies.

e. Procedures for training and maintenance of the emergency organization are in place to ensure 24-hour per day staffing for emergency response, including established communication links.

**2. State and County Functions and Responsibilities**

The state and counties have emergency response plans that specify the responsibilities and functions for the major agencies, departments, and key individuals of their emergency response organizations. This information is located in their respective plans.

**3. Agreements in Planning Effort**

Written agreements establishing the concept of operations developed between Exelon Nuclear and other support organizations having an emergency response role within the EPZs have been developed. These agreements identify the emergency measures to be provided, the mutually accepted criteria for implementation, and the arrangements for exchange of information. Agreement letters are not necessary with Federal Agencies who are legally required to respond based on Federal law; however, agreements are necessary if the agency was expected to provide assistance not required by law. Letters of Agreement with private contractors and others who provide services in support of a specific nuclear station shall be obtained by the respective nuclear station. Letters of Agreement are referenced in the Station Annexes and the actual letters are maintained on file at each station respectively. Letters of Agreement, as a minimum, state that the cooperating organization will provide their normal services in support of an emergency at the affected station. A contract/purchase order with a private contractor is considered acceptable in lieu of a Letter of Agreement for the specified duration of the contract.

**4. Continuous Coverage**

Exelon Nuclear maintains 24-hour emergency response capability at each station. The normal on-shift complement provides the initial response to an emergency. This group is trained to handle emergency situations (e.g. initiate implementation of the E-Plan, make initial accident assessment, emergency classification, notifications, communications, and protective action recommendations) until the augmented ERO arrives. The ERO is composed of a broad spectrum of personnel with specialties in operations, maintenance, engineering, radiochemistry, health physics, material control, fire protection, security, and emergency planning and are available and trained to augment on-shift personnel in an emergency. Procedures for training and maintenance of the emergency organization are in place to provide the capability of continuous (24-hour) operations.

The Corporate Emergency Director, located in the EOF, has the authority and responsibility for assuring continuity of resources (technical, administrative, and material) in the event of the activation of the ERO.

**Figure A-1: Exelon Emergency Response Organization Interrelationships**

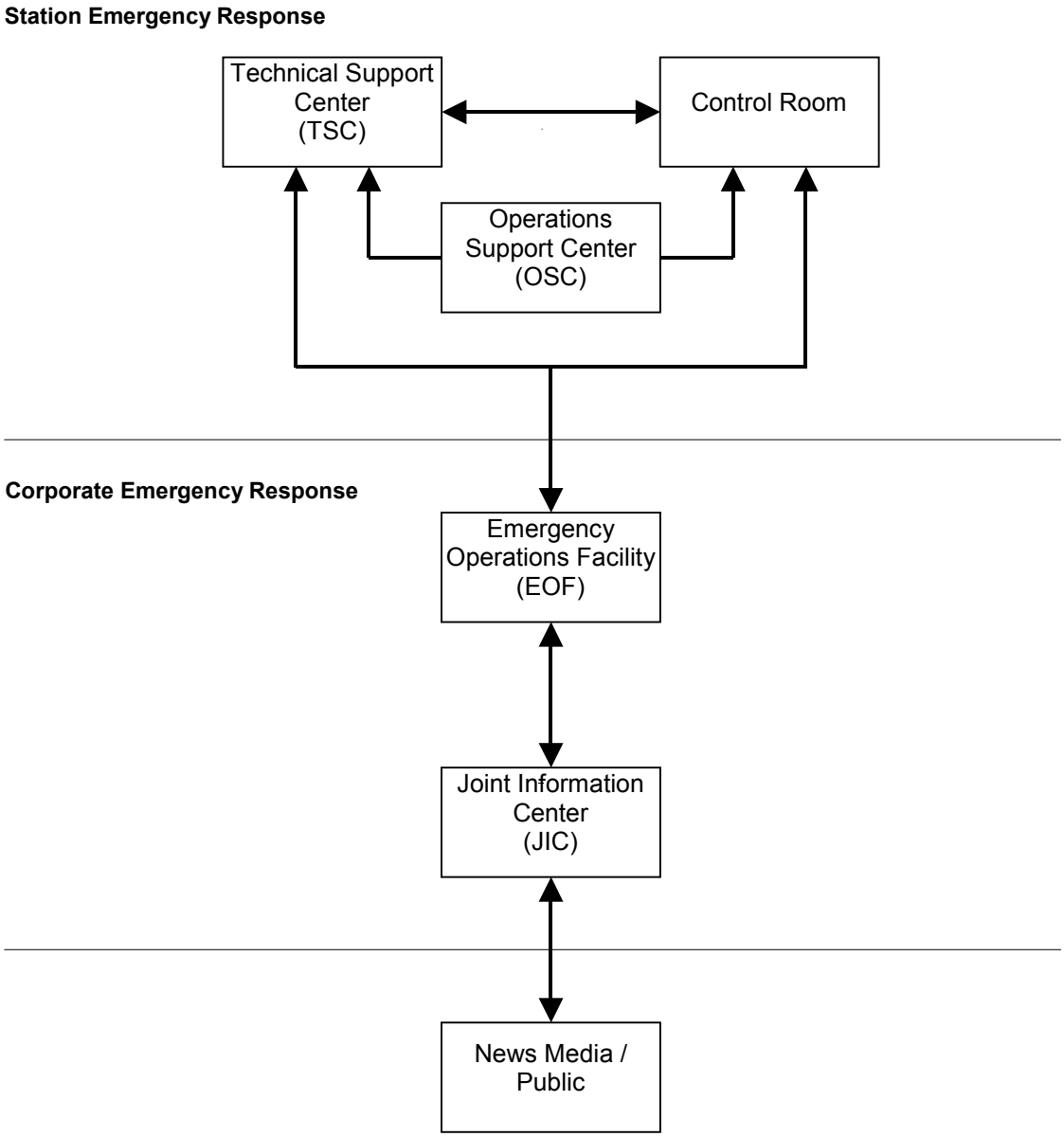

**Figure A-2: Agency Response Organization Interrelationships**

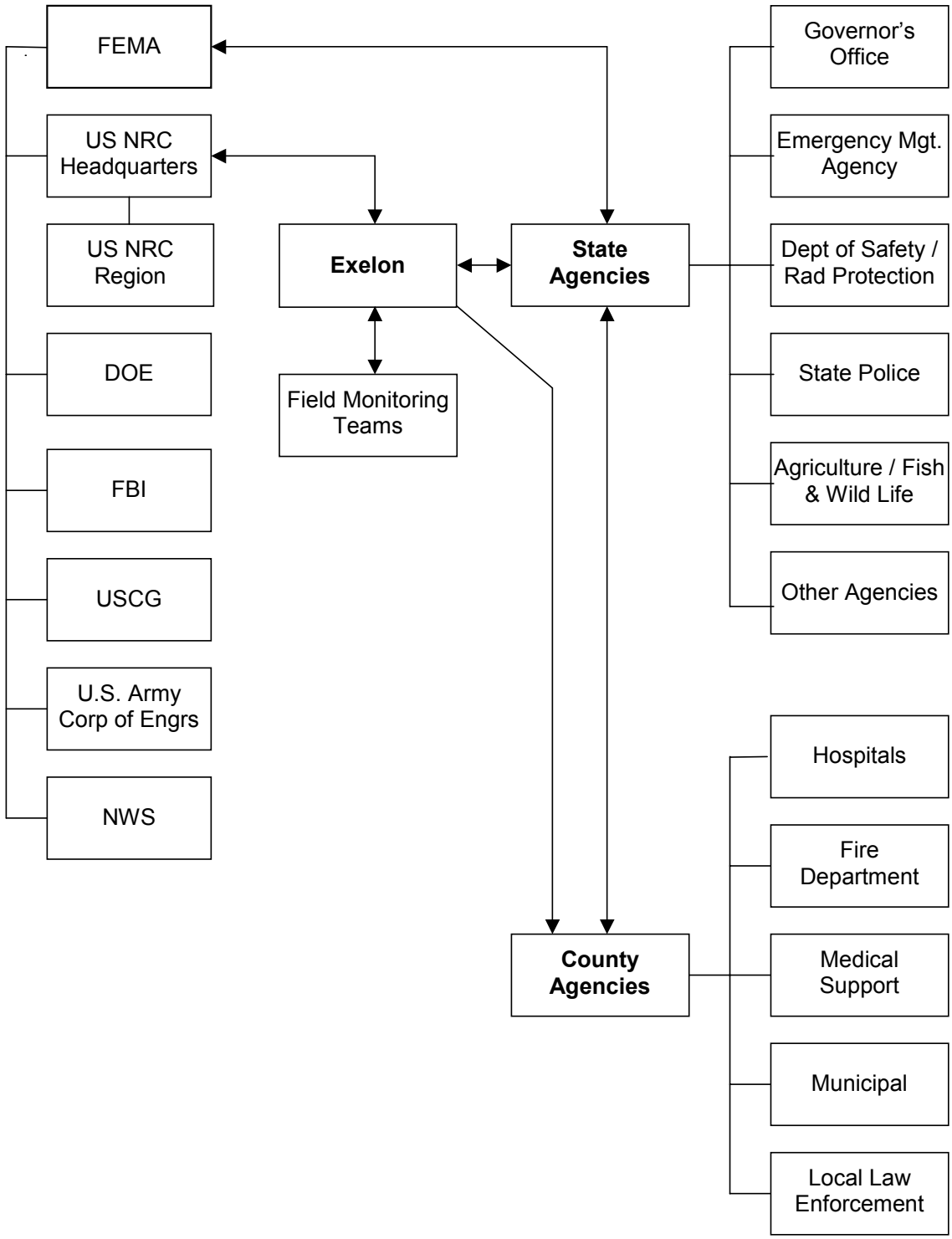

## Section B: Exelon Nuclear Emergency Response Organization

This section describes the Exelon Nuclear Emergency Response Organization (ERO), its key positions and associated responsibilities. It outlines the staffing requirements which provide initial emergency response actions and provisions for timely augmentation of on-shift personnel when required. It also describes interfaces among Exelon Nuclear emergency response personnel and specifies the offsite support available to respond to the nuclear generating stations.

### 1. On-Shift Emergency Response Organization Assignments

The normal plant personnel complement is established with the Station Vice President having overall authority for station operations. The Station Vice President directs the site organization in the management of the various departments while the Shift Manager retains the responsibility for actual operation of plant systems. Emergency Preparedness must consider the capabilities of the normal plant organization, the Station and Corporate Emergency Response Organizations of Exelon Nuclear, and the non-Exelon Nuclear Emergency Response agencies. The initial phases of an emergency situation at a nuclear station will most likely involve a relatively small number of individuals. These individuals must be capable of (1) determining that an emergency exists; (2) providing initial classification and assessment; and (3) promptly notifying other groups and individuals in the emergency organization. The subsequent phases of the emergency situation may require an increasing augmentation of the emergency organization.

All Exelon Nuclear Stations have personnel on shift at all times that can provide an initial response to an emergency event. Table B-1 outlines the plant on-shift emergency organization and its relation to the normal staff complement. Members of the on-shift organization are trained on their responsibilities and duties in the event of an emergency and are capable of performing all response actions in an Unusual Event or the initial actions of higher classifications.

<u>On Shift Personnel</u>

All Exelon Nuclear stations have the capability at all times to perform detection, mitigation, classification, and notification functions required in the early phases of an emergency. Shift augmentation and further ERO involvement will be determined by the extent and magnitude of the event. When a transition to Severe Accident Management Guidelines (SAMG) is initiated, the shift crew assumes the duties and responsibilities of the SAMG Implementers.

<u>Shift Manager:</u> While acting as Shift Emergency Director, will take immediate action during an emergency and will activate the Station ERO, as appropriate. In the Shift Manager's absence or incapacitation, the line of succession is defined by each Station's procedures.

Shift Technical Advisor (STA): During normal plant operations, the Senior Reactor Operators report to the Shift Manager and directly supervise the licensed Reactor Operators and all activities in the Control Room. During an abnormal condition, the Shift Manager assumes direct supervision of personnel and all activities in the Control Room while a qualified individual steps back and assumes an overview role as an STA with the specific responsibility of monitoring the maintenance of core cooling and containment integrity. An individual assigned the duty as the STA shall be available to the Control Room at all times.

Radiation Protection: The Station Radiation Protection personnel are responsible for the handling and monitoring of radioactive materials. Included in this organization are Health Physicists, Radiation Protection Supervisors and Technicians.

Chemistry: The Station Chemistry personnel are responsible for sampling of system effluents, and the chemical and radio-analytical analysis of those samples. Included in this organization are Chemists, Chemistry Supervisors and Technicians.

Security: The Station Security personnel are responsible for the physical security of the site. Included in this organization are Security Supervisors and Security Guards.

**2. Authority Over the Emergency Response Organization**

The Emergency Director in Command and Control is the designated Exelon Nuclear individual who has overall authority and responsibility, management ability, and technical knowledge for coordinating all emergency response activities at the nuclear power station.

- Control Room: Shift Emergency Director (Shift Manager)
- TSC: Station Emergency Director
- EOF: Corporate Emergency Director

**3. Criteria for Assuming Command and Control (Succession)**

Emergency personnel assume responsibility for their positions upon receiving notification to activate. The responsibility for initial assessment of and response to an emergency rests with the Shift Manager. The Shift Manager is the Shift Emergency Director and has the Station Emergency Director's responsibilities and authority until relieved by a qualified Station Emergency Director. The Station Emergency Director, once having relieved the Shift Manager of the Emergency Director responsibilities, is responsible for continued assessment of the severity of the emergency and for the necessary functions as described in the E-Plan, the Station Annex, and the emergency implementing procedures. Final succession is achieved when the Corporate Emergency Director assumes overall Command and Control, and directs Exelon Nuclear's Emergency Response activities.

The Shift Emergency Director is relieved of Command and Control as soon as possible after the declaration of an Alert (or higher classification if Alert not declared). Command and Control may be transferred directly to the Corporate Emergency Director, or transferred to the Station Emergency Director on an interim basis. Command and Control does not transfer until the following criteria have been met:

- Adequate staff levels are present in support of the non-delegable responsibilities.
- The staff has been fully briefed as to the status of the event and the currently proposed plan of action.
- A turnover between the Emergency Director relinquishing Command and Control and the Emergency Director assuming Command and Control has been made.

Although Exelon Nuclear's ERO fulfills all regulatory requirements for emergency response, it may be altered by the Emergency Director. This type of alteration will be based upon identified needs within the ERO, event dependent criteria, and identified needs of the company as a whole.

**4. Non-Delegable Responsibilities**

Non-delegable responsibilities include the following functions:

- Event classification.
- Protective Action Recommendations (PARs) for the general public.
- Notification of offsite authorities (approval of state/local and NRC notifications).
- Authorization of emergency exposure controls in excess of 5 Rem TEDE and the issuance of potassium iodide (KI), for Exelon Nuclear emergency workers per EPA-400.

The Shift Manager is responsible for the initial classification of an event and assumes the position as Shift Emergency Director. In this capacity, the Shift Manager has responsibility for performing the non-delegable responsibilities until relieved.

The Station Emergency Director will assume overall authority and responsibility for performing all of the non-delegable duties from the Shift Manager. The Corporate Emergency Director (EOF) will subsequently relieve the Station Emergency Director (TSC) of overall Command and Control and assume the non-delegable responsibilities for PAR determination and notifications to offsite authorities.

Transition of "Non-Delegable" Responsibilities

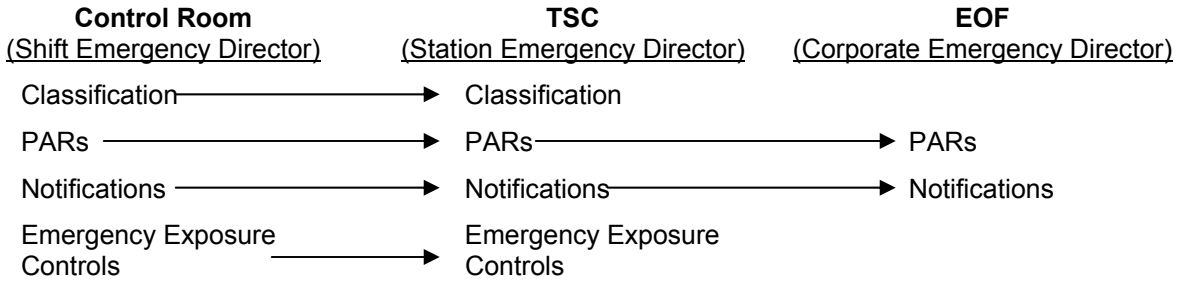


## 5. Emergency Response Organization Positional Responsibilities

Table B-1 outlines ERO positions required to meet minimum staffing and full augmentation of the on-shift complement at an Alert or higher classification, and the major tasks assigned to each position. The full augmentation staffing levels are used as a planning basis to cover a wide range of possible events. For extended events (one which lasts for more than 24 hours), actual staffing will be established by the Emergency Director based on the event and personnel availability. However, additional staffing or reduced staffing will only occur after discussion concerning the impact on plant operations and emergency response.

In addition to maintaining adequate documentation of the event, responsibilities for each position are as follows:

a. Station Emergency Response Organization: The Station ERO is the onsite group that is activated during an emergency. It functions under the Station Emergency Director, who is responsible for organizing and coordinating the emergency efforts at and within the immediate vicinity of the station (including carrying out all onsite emergency efforts and the initial offsite environs monitoring efforts necessary to assess plant releases).

   The Station ERO consists of station personnel who are involved with emergency response efforts necessary to control the plant during an incident. This organization operates out of the Control Room, the Technical Support Center (TSC) and the Operations Support Center (OSC). Collectively, members of the Station ERO provide for the following activities during an emergency:

   - Plant systems operations
   - Radiological survey and monitoring (including Environs Monitoring)
   - Firefighting
   - Rescue operations and First Aid
   - Decontamination
   - Security of plant and access control
   - Repair and damage control
   - Personnel protection including Assembly, Accountability and Evacuation
   - Communications

- Initial Liaison responsibilities with Federal, state and local authorities

When plant conditions warrant entry into the Severe Accident Management Guidelines (SAMGs), the Station Emergency Director or other qualified individual (e.g., Operations Manager) assumes the role of Decision-Maker. The Technical Manager and/or another qualified individual(s) assumes the role of Evaluator (at least two are required), and the Control Room staff assumes the role of Implementers. Control Room personnel will perform mitigating actions for severe accidents per EOPs prior to TSC activation.

All Station ERO personnel shall have the authority to perform assigned duties in a manner consistent with the objectives of this plan.

1) Shift Manager (Shift Emergency Director) Control Room

A Shift Manager is on duty 24 hours a day and is the Shift Emergency Director in a declared emergency until relieved of this function. While serving in this capacity the Shift Manager is responsible for:

- Activating the ERO (as deemed appropriate or as procedurally required).
- Initiating the NRC Emergency Response Data System (ERDS).
- Performing those duties outlined in Section B.5.a.2 for the Station Emergency Director. The responsibilities described for the Station Emergency Director apply to either the Shift Emergency Director or the Station Emergency Director depending on which individual is in Command and Control.

The on-duty Shift Manager directs the activities of the operating crew and is responsible for the safe operation of the plant in compliance with the station NRC operating license and the station operating procedures. The Shift Manager, after relinquishing Command and Control, functionally reports to the Operations Manager in the TSC.

The Shift Manager's responsibilities, when not in Command and Control, are described below:

- The authority and responsibility to shutdown the reactor when determined that the safety of the reactor is in jeopardy or when operating parameters exceed any of the reactor protection circuit set-points and automatic shutdown does not occur;
- To ensure a review has been completed to determine the circumstance, cause, and limits under which operations can safely proceed before the reactor is returned to power following a trip or an unscheduled or unexplained power reduction;

- The responsibility to be present at the plant and to provide direction for returning the reactor to power following a trip or an unscheduled or unexplained power reduction;

- The responsibility to adhere to the station Technical Specifications and to review routine operating data to assure safe operation;

- The responsibility to identify applicable EALs and emergency classifications; and

- The responsibility to adhere to plant operating procedures and the requirements for their use. During an emergency, operations personnel may depart from approved procedures where necessary to prevent injury to personnel, including the public, or damage to the facility consistent with the requirements of 10 CFR 50.54(x) and (y).

- Supervise the activities of the Control Room Crew, Operations Communicator and Damage Control Communicator in the Control Room.

2) Station Emergency Director TSC

The Station Emergency Director reports to the Corporate Emergency Director and supervises and directs the Station ERO. The Station Emergency Director's responsibilities include organizing and coordinating the onsite emergency efforts. Additionally, the Station Emergency Director has the requisite authority, plant operating experience and qualifications to implement in-plant recovery operations.

a) Station Emergency Director Responsibilities while in Command and Control:

- Perform all non-delegable responsibilities as the Emergency Director in Command and Control until relieved by the EOF.

- Conduct personnel assembly/accountability and evacuation of non-essential personnel at Site Area Emergency, General Emergency or as conditions warrant.

- If the emergency involves a hazardous substance and/or oil discharges, ensure that appropriate notifications and responses have been made.

- Determine if the OSC is to remain activated at the Alert Classification.

b) Station Emergency Director Responsibilities while not in Command and Control:

- Event classification.

- Emergency exposure controls.

- Protective actions for all onsite personnel.
- Supervision of the Station ERO.
- Inform the Corporate Emergency Director and onsite NRC as to the status of the plant.
- Assist the Corporate Emergency Director in the acquisition of information for the state/local notifications, NRC notifications and offsite agency updates.
- Provide information and recommendations to the Corporate Emergency Director.
- Implement plans, procedures and schedules to meet emergency response objectives as directed by the Corporate Emergency Director.
- Request from the Corporate ERO any additional material, personnel resources or equipment needed to implement response plans and operations.
- Assume the duties and responsibilities of Decision-Maker when a transition to Severe Accident Management Guidelines (SAMGs) is initiated. This responsibility can be delegated to the Operations Manager if qualified.

3) TSC Director TSC

The TSC Director reports to the Station Emergency Director and is responsible for the content of information transmitted from the TSC to other agencies (or facilities) and for documenting information received at the TSC in coordination with the Station Emergency Director. Responsibilities include:

- Verify that qualified individuals are filling Communicator positions in the Control Room, TSC and OSC.
- Activate, or verify activation of the Emergency Response Data System (ERDS).
- Supervise the activities of the Logistics Coordinator and state/local Communicator.
- Ensure that communications are established with appropriate parties as directed by the Station Emergency Director.
- Ensure that all required notifications to offsite governmental agencies (state/local and NRC) are timely and accurate.
- Act as the Exelon Nuclear Liaison to any NRC Site Team Representatives.

- Ensure that the NRC Site Team Representatives are directed to their appropriate counterparts.
- Assist the Corporate Emergency Director in the acquisition of information for off-site agency updates.
- Record and relay inquiries to the Station Emergency Director. In addition, record responses to such inquiries prior to transmission.
- Assist the Station Emergency Director in maintaining proper records.

4) Communicators CR/TSC/OSC

The Communicators are responsible for transmitting/receiving information to and from the TSC, OSC and Control Room. General responsibilities assigned to all Communicators include:

- Establish communications with appropriate parties as directed.
- Transmit information that has been reviewed and/or approved by the responsible Manager or Coordinator.
- Document time, date and information being transmitted or received on appropriate forms.
- Record and relay inquiries and the responses to those inquiries.
- Assist appropriate Managers and Coordinators in maintaining proper records and logs of emergency related activities.
- Gather, record and post appropriate information.

a) Specific responsibilities assigned to the State/Local Communicator include:

- Communicate and receive information via the Nuclear Accident Reporting System (NARS) circuit or commercial telephone line with appropriate agencies prior to the EOF accepting Command and Control.
- Monitor NARS communications until released by the TSC Director.

b) Specific responsibilities assigned to the Damage Control Communicator include:

- Relay requests from the Control Room and TSC for the dispatching of OSC Teams.
- Apprise the station emergency response facilities of the status of OSC Team activities.

c) Specific responsibilities assigned to the Operations Communicator include:

- Apprise the TSC and EOF staff of the overall plant condition and significant changes to system and equipment status.
- Inform the Control Room, TSC, and EOF of significant changes in event status (e.g., changes in classification, command and control, initiation of station assembly, accountability, evacuation, etc.).

d) Specific responsibilities assigned to the TSC Technical Communicator include:

- Establish and maintain contact with the EOF Technical Advisor.
- Provide EOF with updates on technical support activities and priorities.

e) Specific responsibilities assigned to the ENS Communicator include:

- Notify the NRC of changes in event classification, prior to the EOF accepting Command and Control, and assist the EOF ENS Communicator in completing the NRC Event Notification Worksheet and responding to NRC inquiries.
- Provide real time updates of significant changes to plant and system status and responses to NRC inquiries.
- Maintain continuous communications with the NRC, if requested, via the NRC ENS phone or commercial telephone line.

f) Specific responsibilities assigned to the HPN Communicator include:

- Maintain continuous communications with the NRC, if requested, via the NRC Health Physics Network (HPN) phone or commercial telephone line.
- Communicate current Health Physics information to NRC representatives, as requested.
- Coordinate the communications of radiological information to the NRC with the EOF HPN Communicator (onsite vs. environmental data).

5) Operations Manager TSC

The Operations Manager reports to the Station Emergency Director. Major functions include determining the extent of station emergencies, initiating corrective actions, and implementing protective actions for onsite personnel. In the event that the Station Emergency Director becomes incapacitated and can no longer fulfill the designated responsibilities, the Operations Manager will normally assume the responsibilities until relieved by another qualified Station Emergency Director. Responsibilities include:

- Coordinate TSC efforts in determining the nature and extent of emergencies pertaining to equipment and plant facilities in support of Control Room actions.
- Initiate immediate corrective actions to limit or contain the emergency invoking the provisions of 10 CFR 50.54(x) if appropriate, and specifically when addressing Severe Accident Management Guidelines (SAMG).
- Recommend equipment operations checks and miscellaneous actions to the Control Room in support of restoration and accident mitigation.
- Approve emergency special procedures, and implement as required under the provisions of 10 CFR 50.54(x).
- Assist the Maintenance Manager in determining the priority assigned to OSC activities.
- Organize and direct medical response efforts for injured personnel.
- Ensure adequate staffing of the Control Room and TSC subordinates.
- Ensure the Shift Manager is informed of OSC staffing utilization and activities.
- Identify steps or procedures that the Operations staff should be utilizing to properly respond to the emergency condition.
- Assist the Station Emergency Director in evaluating changes in event classification.
- Supervise the activities of the Operations Communicator and the ENS Communicator in the TSC.
- Act as the TSC liaison with the appropriate NRC Site Team Representative.
- At the direction of the Station Emergency Director, assume the duties and responsibilities of the Evaluator, or Decision-Maker if qualified, when transition to Severe Accident Management Guidelines (SAMG) is initiated.

6) Technical Manager TSC

The Technical Manager reports to the Station Emergency Director and directs a staff in performing technical assessments of station emergencies and assists in recovery planning. Responsibilities include:

- Accumulate, tabulate and evaluate data on plant conditions.
- Evaluate plant parameters during an emergency to determine the overall plant condition.
- Coordinate core damage assessment activities.
- Identify data points and control parameters that the Operations staff should monitor.
- Ensure that current and adequate technical information is depicted on status boards.
- Identify and direct staff in the development of special procedures needed to effect long-term safe shutdown or to mitigate a release.
- Supervise the total onsite technical staff effort.
- Act as the TSC liaison with state and appropriate NRC Site Team representatives.
- Assist the Radiation Protection Manager for onsite radiological/technical matters.
- Assist the Station Emergency Director in evaluating plant based PARs (prior to Corporate Emergency Director accepting command and control) and changes in event classification.
- Supervise the activities of the TSC Technical Communicator.
- Assume the duties and responsibilities of an Evaluator when transition to Severe Accident Management Guidelines (SAMG) is initiated and supervise the activities of the SAMG Evaluator Team

7) Technical Support Staff TSC

The TSC Technical Support Staff consists of the following minimum staff engineering positions:

- Electrical Engineer
- Mechanical Engineer
- Core/Thermal Hydraulic Engineer - serves as Core Damage Assessment Methodology (CDAM) Evaluator, as applicable.

In addition, station Engineering support will be augmented on an as needed basis to support accident assessment and mitigation activities.

8) Logistics Coordinator TSC

The Logistics Coordinator reports to the TSC Director and provides administrative services in support of emergency/recovery operations. Responsibilities include:

- Coordinate shift relief and continual staffing of the station.
- Arrange for clerical staff at the TSC, OSC and Control Room.
- Assist the Security Coordinator in coordinating ERO and station activities in support of on-going security contingency, accountability or site/area evacuation efforts.
- Support the processing of special procedures and interim reports during an emergency.
- Ensure that event status and priority logs are being maintained in the TSC.
- Coordinate record-keeping efforts at the station.
- Arrange for food, sleeping facilities and other necessary accommodations for onsite emergency workers.
- Arrange for specialized training of Emergency Response personnel as needed.

9) Radiation Protection Manager (RPM) TSC

The Radiation Protection Manager reports to the Station Emergency Director and supervises the activities of the Radiation Controls Coordinator and Radiation Controls Engineer. The TSC RPM directs a staff in determining the extent and nature of radiological or hazardous material problems onsite. Responsibilities include:

- Accumulate, tabulate and evaluate data on plant conditions such as meteorological and radiological monitoring readings, and other pertinent data.
- Act as the TSC liaison with the appropriate NRC Site Team representative.
- Ensure use of protective clothing, respiratory protection, and access control within the plant as deemed appropriate to control personnel exposures.

- Ensure that appropriate bioassay procedures have been implemented for onsite personnel when a radioactivity incident has occurred.
- Ensure that personnel are decontaminated, if necessary.
- Authorize personnel exposures below 5 Rem TEDE (EPA-400 lower limit).
- Assist the Station Emergency Director in determining if exposures in excess of the 5 Rem TEDE (EPA-400 lower limit) are necessary.
- Advise the Station Emergency Director of situations when the use of KI should be considered.
- Assist the Station Emergency Director in evaluating dose-based PARs (prior to Corporate Emergency Director accepting command and control) and changes in radiological event classification.
- Advise the Station Emergency Director and EOF Radiation Protection Manager of changes in radiological release status.
- Assist the Operations Manager in planning rescue operations and provide monitoring services as required, including the transfer of injured and/or contaminated personnel.
- Coordinate with the Security Coordinator to determine the routes to be used for evacuation of non-essential personnel.
- Assure additional radiation protection personnel and/or equipment is arranged for, as necessary.

10) Radiation Controls Engineer (RCE) TSC

The Radiation Controls Engineer reports to the Radiation Protection Manager and coordinates the radiological and chemistry interface between the technical support engineering efforts. Responsibilities include:

- Monitor area and process radiation monitors to identify trends and potential hazards within the station.
- Evaluate plant environmental factors regarding radiological and other hazardous material conditions.
- Evaluate radiological and hazardous material surveys and chemistry sample results as appropriate.
- Direct the performance of sampling activities through coordination with the OSC Chemistry Lead in support of operations and core damage estimates as necessary.

- Coordinate radiological and chemistry information with the Core/Thermal Hydraulic Engineer in support of core damage assessment.

11) Radiation Controls Coordinator (RCC) TSC

The Radiation Controls Coordinator reports to the Radiation Protection Manager. The RCC coordinates site and in-plant Radiation Protection response activities through the OSC Radiation Protection Lead. Responsibilities include:

- Support the OSC Radiation Protection Lead in the dispatching of OSC Teams.
- Assist the Operations Manager in planning radiological controls for personnel dispatched from the Control Room.
- Ensure the proper use of protective clothing, respiratory protection, and access controls in the plant as appropriate to control personnel exposure.
- Monitor habitability concerns impacting access to plant and site areas.
- In coordination with the OSC Radiation Protection Lead, assemble and dispatch the Field Monitoring Teams as required.
- Supervise the activities of the HPN Communicator in the TSC.
- Request additional Radiation Protection personnel and/or equipment, as necessary in support of station activities and staff relief.
- Prior to EOF Protective Measures Group staffing:
  - Perform dose assessments and provide appropriate dose-based PARs.
  - Coordinate Field Monitoring Team activities.
  - Monitor meteorological conditions and remain cognizant of forecast data.
- Following EOF Protective Measures Group staffing:
  - Transfer control of the Field Monitoring Teams to the EOF Environmental Coordinator when appropriate.
  - Transfer responsibility of dose assessment activities to the EOF Dose Assessment Coordinator.
  - Assist the EOF Environmental Coordinator in the acquisition of information for the off-site agency updates.

12) Maintenance Manager TSC

The Maintenance Manager reports to the Station Emergency Director and directs a staff in providing labor, tools, protective equipment and parts needed for emergency repair, damage control and recovery efforts to place the plant in a safe condition or return the plant to its pre-accident status. Responsibilities include:

- Direct the total onsite maintenance and equipment restoration effort.
- Request additional equipment in order to expedite recovery and restoration.
- Supervise the activities of the OSC Director and the TSC Damage Control Communicator.
- Ensure the Operations Manager is informed of OSC staffing utilization and activities.
- In coordination with the Operations Manager, determine the priority assigned to OSC activities.
- Ensure adequate staffing of the OSC.
- Assist in rescue operations.
- Identify required procedures that need to be written or implemented in support of the response efforts.

13) Security Coordinator TSC

The Security Coordinator reports to the Station Emergency Director and maintains plant security and personnel accountability at the nuclear station. Responsibilities include:

- Maintain plant security and account for all personnel within the protected area.
- Assist the Station Emergency Director in evaluating changes in security related threats and event classifications.
- Identify any non-routine security procedures and/or contingencies that are in effect or that require a response.
- Expedite ingress and egress of emergency response personnel.
- Coordinate with the Radiation Protection Manager in controlling ingress and egress to and from the Protected Area if radiological concerns are present.

- Provide for access control to the Control Room, TSC and OSC, as appropriate.
- Expedite entry into the Protected Area, as necessary, for the NRC Site Team.
- Act as the TSC liaison with the appropriate NRC Site Team representative.
- Assist the Radiation Protection Manager in determining personnel evacuation routes as necessary.
- Coordinate the evacuation of station non-essential personnel with the appropriate Local Law Enforcement Agencies (LLEAs).

14) Operations Support Center Director OSC

The OSC Director reports to the Maintenance Manager and supervises the activities of OSC personnel. Responsibilities include:

- Assign tasks to designated Leads as available:
  - Operations
  - Mechanical Maintenance
  - Electrical/I&C Maintenance
  - Radiation Protection
  - Chemistry
- Coordinate with the OSC Operations Lead in the dispatch of Operations personnel to support Control Room and OSC Team activities.
- Notify the Control Room and TSC prior to dispatch of any OSC teams into the plant.
- Maintain OSC resources including personnel, material, and equipment.
- Maintain accountability for all individuals dispatched from the OSC.
- Conduct periodic briefings on the overall plant status, emergency response activities, and station priorities.

15) Assistant Operations Support Center Director OSC

The Assistant OSC Director reports to the OSC Director and supports the OSC Director in supervising the activities of personnel reporting to the OSC. The Assistant OSC Director may be filled by an OSC Lead, normally the Radiation Protection Lead. Responsibilities include:

- Assist the OSC Director in supervising personnel assigned to the OSC.
- Assist in formation of Field Monitoring Teams as directed by the TSC.
- Assist in formation of sampling teams.
- Ensure that records of in-plant survey information and radiochemistry results are maintained.
- Ensure that accumulated exposure records for all essential onsite personnel are maintained.
- Coordinate with the OSC Leads to organize in-plant teams to support station priorities.
- Ensure that in-plant team dispatch briefings include expected activities and radiological hazards.
- Ensure that periodic facility briefings are conducted on plant radiological conditions.

16) OSC Leads OSC

OSC Leads report to the OSC Director and are assigned from the following station departments:

- Mechanical Maintenance
- Electrical / Instrument and Control
- Radiation Protection
- Chemistry
- Operations (on-shift Supervising Operator or designated Operations representative)

The OSC Lead assigned to an OSC team is responsible at all times for the safety of team personnel and to keep the OSC Director apprised of team status. Specifically, the OSC Leads are responsible for the managing and supervising OSC team personnel, including:

- Conduct of adequate pre-dispatch briefings.

- Ensuring adequate protective equipment and measures have been identified.
- Tracking of OSC team activities while dispatched.
- Debriefing of team personnel upon return to the OSC.

b. Corporate Emergency Response Organization

1) Nuclear Duty Officer (NDO)

The NDO is the Exelon Nuclear individual who acts as the initial Corporate contact for declared events. Responsibilities include:

a) Actions for all classified events:

- Contact the affected station to verify and obtain updated information concerning emergency response actions and event status.
- Notify Exelon Nuclear Executives of event.
- Provide information on the event to State Duty Officers, if requested.
- Notify the on-call Exelon Communications and Public Affairs Representative.
- Prior to EOF activation, review any news releases for accuracy.

b) Actions for Alert classifications and above:

- Complete all actions as listed above.
- Notify American Nuclear Insurers (ANI) and Institute of Nuclear Power Operations (INPO), prior to being transferred to the EOF.

2) Corporate Emergency Director EOF

a) When the Station Emergency Director has Command and Control, the ongoing responsibilities include:

- Coordinate all Exelon Nuclear activities involved with the emergency response.
- Ensure off-site agency updates are periodically communicated as required/requested.
- Coordinate Exelon Nuclear press releases with the Nuclear Duty Officer and Exelon Communications and Public Affairs.
- Request assistance from non-Exelon Nuclear emergency response organizations, as necessary.

b) Following assumption of Command and Control, the additional responsibilities assigned to the Corporate Emergency Director include:

- Assumes overall Command and Control of emergency response activities and the non-delegable responsibilities for PAR determination and the notification of offsite authorities.
- Ensure that Federal, state and local authorities and industry support agencies remain cognizant of the status of the emergency situation. If requested, dispatch informed individuals to offsite governmental Emergency Operation Centers (EOCs).
- Approve the technical content of Exelon Nuclear press releases prior to their being released to the media.

3) EOF Director EOF

The EOF Director reports to the Corporate Emergency Director and has the authority, management ability and technical knowledge to assist the Corporate Emergency Director in the management of Exelon Nuclear's offsite ERO.

In the event that the Corporate Emergency Director becomes incapacitated, the EOF Director shall assume the responsibilities of the Corporate Emergency Director until a transfer of Command and Control can be affected either back to the station or to another qualified Corporate Emergency Director. Responsibilities include:

- Direct and coordinate the activation and response efforts of the EOF staff in support of the Corporate Emergency Director.
- Evaluate the need to augment the EOF staff based on events in progress.
- Assess the effectiveness of ongoing EOF working relationships.
- Monitor information flow within the EOF to ensure that facility activities remain coordinated.
- Prepare state/local notification forms with the assistance of the EOF Radiation Protection Manager and the Technical Support Manager.
- Coordinate services as necessary to support EOF operations.
- Coordinate with the Administrative Coordinator for continual shift staffing requirements.
- Assist in the conduct of Corporate Emergency Director duties.

- Act as the designated alternate for approval of the technical content of Exelon Nuclear Press Releases and information released to the News Media.

- Act as purchasing agent in support of the TSC for contract negotiation/administration.

4) Technical Support Manager EOF

The Technical Support Manager reports to the EOF Director and directs the activities of the Technical Support Group. Responsibilities include:

- Assist the Corporate Emergency Director in monitoring changes in event classification.

- Assist the Corporate Emergency Director in determining plant-based PARs when necessary.

- Provide information to the EOF Director for completing the state/local notification form.

- Provide the Corporate Emergency Director information concerning the status of plant operations, and recommendations for mitigating the consequences of the accident.

- Coordinate the overall Exelon Nuclear engineering support from corporate staff and unaffected stations.

- Interface with Industry and contractor engineering support organizations.

- Ensure that the EOF Radiation Protection Manager is informed of changes in plant status that impacts or potentially impacts the offsite environment or PARs.

- Provide technical information on facility and system design.

- Assist in the development of post-accident recovery measures.

5) Operations Advisor EOF

The Operations Advisor reports to the Technical Support Manager, directs the ENS Communicator, and is responsible for obtaining and analyzing plant status information and ensuring that it is disseminated. Specific responsibilities include:

- Monitor the Operations Status Line to keep apprised of:

  - Control Room activities including progress on Emergency Operating Procedures.

  - Significant changes in plant system/equipment status and critical parameters.

  - Possible changes in event classification.

- Identify and track critical parameters for the identification and trending of current plant status information.

- Assist the station in identifying Operations resources from corporate staff or unaffected stations for direct support of plant shift operations personnel.

- Assist the ENS Communicator in the completion of the NRC Event Notification Worksheet and in responding to NRC inquiries.

- Ensure that the EOF Radiation Protection Manager is informed of changes in plant status that impact or potentially impact the offsite environment or PARs.

6) ENS Communicator EOF

The ENS Communicator reports to the Operations Advisor. Specific responsibilities include:

- Notify the NRC of changes in event classification. Generally, the TSC ENS Communicator focuses on real time plant operations and the EOF ENS Communicator focuses on notifications following changes in event classification and overall changes in event response or status.

- Establish and maintain continuous communications with the NRC, if requested, via the NRC ENS phone or commercial telephone line.

- Coordinate NRC communications with the ENS Communicator in the TSC.

7) Technical Advisor EOF

The Technical Advisor reports to the Technical Support Manager and is responsible for obtaining and analyzing technical support information, accident mitigating activities and priorities and ensuring that it is disseminated. Responsibilities include:

- Monitor the Technical Conference Line to remain aware of TSC technical support activities, strategies and priorities.

- Assist the Dose Assessment Coordinator in acquiring technical information pertaining to release pathway and core damage assessment.

- Supervise the activities of the Events Recorder.

8) Events Recorder EOF

The Events Recorder reports to the Technical Advisor. Responsibilities include:

- Gather/record approved information on status boards as requested.
- Maintain an event chronology/status log.

9) Radiation Protection Manager EOF

The Radiation Protection Manager reports to the EOF Director and directs the activities of the EOF Radiation Protection staff. Specific responsibilities include:

- Recommend changes in event classification and PARs based upon effluent releases or dose projections.
- Assist the EOF Director in the evaluation of the significance of an emergency with respect to the public.
- Notify the EOF Director of meteorological changes that may impact identification of downwind areas.
- Advise the Corporate Emergency Director of protective actions taken by the station for plant personnel.
- Assist the TSC in the planning and coordination of activities associated with the evacuation of non-essential personnel.
- Advise the Corporate Emergency Director on the need for emergency exposures or for issuance of KI to the Field Monitoring Teams or Exelon personnel required to enter the plume.
- Determine the need for and contact Occupational Health/Industrial Safety Services personnel for assistance.
- Monitor plant radiological conditions and advise the TSC Radiation Protection Manager of any adverse trends or potential release pathways that may impact existing event classification.
- Assist in the completion and review of the state/local notification form.
- Maintain cognizance of environmental sampling activities.
- Ensure state authorities are provided information pertaining to Exelon Field Monitoring Team activities and sample results.
- Assist the affected station in the following areas:

- Planning and coordination of activities associated with the evacuation of non-essential personnel.

- Acquisition of additional instrumentation, dosimetry, protective equipment and radiological support personnel.

- Assist and interface with the EOF Technical Support Group and the station in the development of plans for plant surveys, sampling, shielding, and special tools in support of waste systems processing and design modification activities.

- Upon request, provide in-plant health physics data to Emergency Public Information personnel and the HPN Communicator.

10) Environmental Coordinator EOF

The Environmental Coordinator reports to the EOF Radiation Protection Manager and directs the Field Team Communicator, Field Monitoring Teams and the State Environs Communicator. Responsibilities include:

- Coordinate the transfer of control of the Field Monitoring Teams if initially under the direction of the TSC Radiological Controls Coordinator.

- Ensure communications are established with the TSC to obtain information on the accident conditions, meteorological conditions and estimates of radioactive material releases.

- Maintain cognizance of Field Monitoring Team exposure. When warranted, ask the Dose Assessment Coordinator to initiate an evaluation of the need for administering KI to Exelon nuclear workers.

- Determine needs of the Dose Assessment Coordinator, the Dose Assessor, the HPN Communicator and the State Environs Communicator(s) for updates on Field Monitoring Team data and ensure distribution of new data to them in accordance with those needs.

- Upon request, provide environmental data to Emergency Public Information personnel.

- Evaluate and coordinate additional equipment and personnel as necessary from unaffected stations to augment and/or relieve station Field Monitoring Teams.

11) State Environs Communicator EOF

The State Environs Communicator is staffed as requested by the applicable state agencies. The State Environs Communicator reports to the Environmental Coordinator. Responsibilities include:

- As needed, obtain release and dose assessment data from the Dose Assessment Coordinator and Field Monitoring Team data from the Environmental Coordinator.
- Coordinate activities and information flow between the EOF Protective Measures Group and the affected state(s) environmental authorities, including periodic updates on meteorological conditions, Field Monitoring Team activities and survey/sample results.
- Ensure that the Environmental Coordinator is aware of state environmental activities and sample results.

12) Field Team Communicator EOF

The Field Team Communicator reports to the Environmental Coordinator. Responsibilities include:

- Establish and maintain contact with the dispatched Field Monitoring Teams.
- Document the Environmental Coordinator's instructions and then relay this information to the Field Monitoring Teams.
- Document environmental data reported by the Field Monitoring Teams.
- Periodically obtain and document information on Field Monitoring Team radiological exposure.
- Promptly report new environmental or Field Monitoring Team exposure data to the Environmental Coordinator.
- Document questions and answers directed to and received from the Field Monitoring Teams. Ensure the Environmental Coordinator is cognizant of these information requests and relay replies to these requests.

13) Dose Assessment Coordinator EOF

The Dose Assessment Coordinator reports to the EOF Radiation Protection Manager and directs the activities of the Dose Assessor and the HPN Communicator. Responsibilities include:

- Interpret radiological data and provide PARs based upon dose projections to the EOF Radiation Protection Manager.

- Advise the EOF Radiation Protection Manager of changes in event classification based on effluent releases or dose projections.

- Initiate evaluation of the need for administering KI to Exelon nuclear workers when requested by the Environmental Coordinator.

- Remain cognizant of forecast and meteorological data and ensure the status is updated periodically.

- Notify the EOF Radiation Protection Manager of meteorological changes that may impact identification of downwind areas.

- Upon request, provide release and dose assessment data to Emergency Public Information personnel, the HPN Communicator, and the State Environs Communicators.

14) Dose Assessor EOF

The Dose Assessor reports to the Dose Assessment Coordinator. Responsibilities include:

- Perform dose projections using the Dose Assessment computer models as directed by the Dose Assessment Coordinator.

- Monitor meteorological and plant effluent conditions.

- Notify the Dose Assessment Coordinator of meteorological changes that may impact identification of downwind areas.

- Evaluate the need for administering KI to Exelon nuclear workers when requested by the Dose Assessment Coordinator.

15) HPN Communicator EOF

The HPN Communicator reports to the Environmental Coordinator. Responsibilities include:

- Provide updates and respond to inquiries from the NRC on offsite environmental data, release status, dose projections and changes to PARs for the general public.

- Obtain release and dose assessment data from the Dose Assessment Coordinator and Field Monitoring Team data from the Environmental Coordinator.

- Maintain continuous communications with the NRC, if requested, via the NRC HPN phone or commercial telephone line.

- Communicate current Health Physics information to NRC representatives, as requested.

16) Logistics Manager EOF

The Logistics Manager reports to the EOF Director and directs the activities of the administrative, security and liaison personnel. Responsibilities include:

- Ensure contact is made and communications are maintained with appropriate Non-Exelon Nuclear personnel whose assistance may be required to terminate the emergency conditions and to expedite the recovery.
- Advise the EOF Director concerning the status of activities relating to governmental interfaces.
- Obtain support from Human Resources, the Comptroller's Office, the Legal Department, Accounting Department and others as required.
- Coordinate with the Nuclear Duty Officer to maintain communications with ANI and INPO.
- Ensure that access to the EOF is limited to Emergency Responders and authorize admittance to non-Exelon personnel.
- Implement the Exelon Nuclear Fitness for Duty Program.
- Ensure that NRC Site Team Representatives are directed to the Regulatory Liaison upon arrival at the EOF.
- Ensure that updates and information are provided to the EOC Liaisons and to offsite officials present in the EOF.
- Assist in obtaining and coordinating additional technical expertise to support station requests, including Exelon Corporate staff, unaffected stations and vendor/contractors.
- Coordinate maintenance of EOF equipment as necessary.
- Ensure shift relief and continual staffing for the EOF.

17) Administrative Coordinator EOF

The Administrative Coordinator reports to the Logistics Manager. Responsibilities include:

- Direct the activities of the Computer Specialist.
- Direct the clerical staff and ensure the clerical requirements for the other EOF and JIC staff are met.
- Obtain clerical support for the EOF and JIC.

- Coordinate shift relief and continual staffing for the EOF.
- Obtain services as appropriate to support operation of the EOF.

18) Computer Specialist EOF

The Computer Specialist reports to the Administrative Coordinator. Responsibilities include:

- Assist any personnel in logging in, initializing or using a desired computer program.
- Investigate and repair problems encountered with communications equipment and computer equipment/applications.

19) Security Coordinator EOF

The Security Coordinator reports to the Logistics Manager. Responsibilities include:

- Provide and interpret information on security events.
- Assist with access control activities at the EOF and JIC.
- Perform the following in support of the TSC Security Coordinator:
  - Provide assistance in resolving security events.
  - Assist as a liaison for local, state and federal law enforcement agencies during security related events.
  - Serve as the primary contact to the security force contractors for additional support, if necessary, during a security event.
- Obtain additional resources to support access control measures needed at the EOF and JIC.

20) State/Local Communicator EOF

The State/Local Communicator reports to the Logistics Manager. Responsibilities include:

- Communicate and receive information via the Nuclear Accident Reporting System (NARS) circuit or commercial telephone line with appropriate state and county agencies.
- Ensure that the Logistics Manager is made aware of issues and questions raised by offsite agencies and then relay the replies to these requests.

21) EOC Communicator EOF

The EOC Communicator reports to the Logistics Manager. Responsibilities include:

- Coordinate and dispatch EOC Liaisons as needed or requested.
- Establish and maintain periodic contact with each location where Exelon Nuclear EOC Liaisons have been dispatched.
- Ensure EOC Liaisons are provided event information and notifications.
- Ensure that the Logistics Manager is made aware of issues and questions raised by offsite agencies and then relay the replies to these requests.

22) County EOC Liaison(s) County EOCs

The County EOC Liaison(s) will be dispatched to County Emergency Operations Centers (EOCs) based on established agreements with the counties. The County EOC Liaisons use the EOC Communicator as their contact at the EOF. Responsibilities include:

- Monitor and report County EOC activities to the EOF.
- Conduct briefings and answer questions.
- Provide simplified explanations to EOC personnel of technical details distributed through approved channels.
- Assist with confirmation/verification of information distributed through approved channels.
- Provide media at the EOC with approved Exelon Nuclear press releases.
- Assist Emergency Public Information personnel in rumor control and media monitoring.

23) State EOC Liaison(s) State EOCs

At the request of state officials and/or at the discretion of the Corporate Emergency Director, Exelon Nuclear will provide Liaison personnel to state Emergency Operation Centers (EOCs). The state EOC Liaisons use the EOC Communicator as their contact at the EOF. Responsibilities include:

- Monitor and report state EOC activities to the EOF.
- Conduct briefings and answer questions as requested.
- Assist Emergency Public Information personnel in rumor control and media monitoring.

24) Regulatory Liaison EOF

The Regulatory Liaison reports to the Logistics Manager. Responsibilities include:

- Coordinate interfaces between Exelon Nuclear personnel and governmental agencies within the EOF.
- Obtain necessary equipment and supplies to support activities of governmental agencies located in the EOF.
- Act as the Exelon Nuclear Liaison to the NRC Site Team representatives.

c. Public Information Emergency Response Organization

1) Corporate Spokesperson JIC

The Corporate Spokesperson reports to the Corporate Emergency Director and is responsible for directing the Exelon Emergency Public Information Organization and providing news information to the media. Responsibilities include:

- Maintain command and control of the Joint Information Center.
- Coordinate with Federal, state and local agencies, as well as with other organizations involved in the emergency response, to maintain factual consistency of information to be conveyed to the news media/public.
- Conduct periodic briefings with the news media.
- Interface with the Public Information Director.
- Coordinate and direct responses to media inquiries.
- Ensure that the composition and timeliness of Exelon News Releases are adequate.
- Provide for timely exchange of information between other spokespersons.

2) Technical Spokesperson JIC

The Technical Spokesperson reports to the Corporate Spokesperson. Responsibilities include:

- Assist in development of technical and plant status information for use in news releases and media briefings.
- Assist the Events Recorder in the preparation of a chronological event description log.
- Prepare briefing papers which contain additional detail and background not found in the news releases.

- Provide answers as soon as possible to media questions.
- Provide a follow-up explanation that corrects misinformation as soon as practicable.

3) Radiation Protection Spokesperson JIC

The Radiation Protection Spokesperson reports to the Corporate Spokesperson. Responsibilities include.

- Assist in development of environmental and health physics information for use in news releases and media briefings.
- Assist the Events Recorder in the preparation of a chronological event description log.
- Prepare briefing papers which contain additional detail and background not found in the news releases.
- Provide answers as soon as possible to media questions.
- Provide a follow-up explanation that corrects misinformation as soon as practicable.

4) JIC Director JIC

The JIC Director reports the Corporate Spokesperson to ensure the operability of and to supervise the activities in the JIC. Responsibilities include:

- Maintain cognizance of conditions of the plant and environment, and the actions of Exelon Nuclear and governmental support personnel.
- Coordinate with Federal, state and local agencies, as well as with other organizations involved in the emergency response, to maintain factual consistency of information to be conveyed to the news media/public.
- Participate, as needed, in rumor control activities.
- Ensure that adequate information flow between the EOF and the JIC is coordinated through the Public Information Director.
- Authorize admittance of non-Exelon Nuclear officials to the JIC.

5) JIC Coordinator JIC

The JIC Coordinator reports to the JIC Director and supervises the facilities support staff. Responsibilities include:

- Ensure the JIC is activated and operational. This includes the availability of communications and visual aids.
- Ensure that access to the JIC areas occupied by Exelon personnel is controlled.
- Establish a minimum frequency for addressing news media/public representatives and ensure that some form of communication occurs within that time frame (i.e., an update at least hourly.)
- Ensure that approved News Releases and Chronological Event Description Logs are made available in the JIC.
- Document unanswered questions and serious public misinformation issues. Follow-up on these questions and issues to ensure that they are being adequately addressed.
- Coordinate the interface between Exelon Nuclear and the news media/public, including, as necessary, briefings, news conferences, interviews and responses to information requests.

7) Administrative Coordinator JIC

The Administrative Coordinator reports to the JIC Director. Responsibilities include:

- Coordinate with the EOF Administrative Coordinator to ensure the clerical requirements for the other JIC staff are met.
- Coordinate shift relief and continual staffing for the JIC.
- Obtain services as appropriate to support operation of the JIC.

8) Access Controller JIC

The Access Controller reports to the JIC Director and is responsible for controlling facility access and obtaining authorization prior to admitting non-Exelon Nuclear officials into the JIC.

9) Public Information Director (PID) JIC

When the Emergency Public Information Organization is activated, the Public Information Director reports to the Corporate Spokesperson and is responsible for all emergency event related information intended to be conveyed from Exelon Nuclear to the news media/public. The Public Information Director supervises the activities of the, News Writer, Events Recorder and media monitoring and rumor control personnel. Responsibilities include:

- Provide the Corporate Emergency Director with an overview of the public and media impacts resulting from the Exelon Nuclear and governmental activities.
- Participate with the Corporate Emergency Director regarding information to be released to the public.
- Authorize the issuance of news releases.
- Interface with the Corporate Spokesperson at the JIC.
- Act as a liaison between the ERO and Exelon Nuclear's corporate executives.
- Maintain cognizance of conditions of the plant and environment, and the actions of Exelon Nuclear and governmental support personnel.
- Coordinate information flow between the EOF and the JIC.
- Coordinate with the Media Monitoring Staff to review and access media coverage of the emergency event.

10) News Writer JIC

The News Writer reports to the Public Information Director. Responsibilities include:

- Compose draft news releases with assistance from the Technical Spokesperson and the Radiation Protection Spokesperson.
- Provide the drafted news releases to the Corporate Emergency Director for technical review prior to Public Information Director approval.

11) Events Recorder JIC

The Events Recorder reports to the Public Information Director. Responsibilities include:

- Develop a chronological event description log.

12) Media Monitoring Staff JIC

The Media Monitor reports to the Public Information Director. Responsibilities include:

- Ensure that the media is being monitored and that Exelon Nuclear personnel review the information detailed or contained in media releases.
- Inform the Public Information Director of all media reports and of actions taken to correct any misinformation or rumors.
- Direct the activities of the Rumor Control Staff with respect to the function of monitoring rumors from sources other than the media.

13) Rumor Control Staff JIC

The Rumor Control Staff reports to the Public Information Director and acts in support of the Media Monitors. Responsibilities include:

- Ensure that rumors are reviewed, documented and responded to by Exelon Nuclear personnel as deemed appropriate.
- Until the JIC is fully activated, document and respond to rumors as quickly as possible, through the Exelon Communications and Public Affairs.
- Inform the Media Monitors when rumors representing serious misinformation are encountered.

## 6. Exelon Emergency Response Organization Block Diagram

Table B-1 lists the key positions of the ERO and the supporting positions assigned to interface with federal, state, and county authorities. Figures B-1a through B-1d illustrates the overall emergency response organization. Section B.5 discusses specific responsibilities and the interrelationships for key positions.

## 7. Exelon Corporate Emergency Response Organization

The Corporate ERO consists of the EOF Organization and the Emergency Public Information Organization. Personnel staffing these corporate organizations are covered in detail in Section B.5 of this plan.

The Corporate Emergency Response Organization is staffed by Exelon personnel, and operates out of the Emergency Operations Facility (EOF) and the Joint Information Center (JIC). The Corporate ERO is supported by News Media Spokespersons, environmental assessment staff and monitoring teams that provide long-term support to the affected station. Additionally, the Corporate ERO has long term liaison responsibilities with federal, state, and local authorities.

The Emergency News Center (ENC) function is responsible for the collection and analysis of event information and status, and development of Company news statements. This information is then communicated to the JIC Spokespersons. The ENC function may be located at either the EOF or the JIC.

The Corporate ERO is activated at an Alert. The EOF Organization is responsible for evaluating, coordinating and directing the overall company activities involved in the emergency response. Within the EOF, the Corporate Emergency Director shall assume Command and Control from the Station Emergency Director when classification escalates to an Alert or higher, unless the EOF capabilities are limited such that the overall control and responsibility for PARs and offsite notifications cannot be assumed. The EOF may also function in a supporting role to the station when the Station Emergency Director maintains Command and Control.

**8. Industry/Private Support Organizations**

Exelon Nuclear retains contractors to provide supporting services to nuclear generating stations. A contract/purchase order with a private contractor is acceptable in lieu of an agreement letter for the specified duration of the contract. Among services currently provided are the following:

a. Institute of Nuclear Power Operations (INPO): Experience has shown that a utility may need resources beyond in-house capabilities for the recovery from a nuclear plant emergency. One of the roles of the Institute of Nuclear Power Operations (INPO) is to assist affected utilities by quickly applying the resources of the nuclear industry to meet the needs of an emergency. INPO has an emergency response plan that enables it to provide the following emergency support functions:

- Assistance to the affected utility in locating sources of emergency personnel, equipment and operational analysis.
- INPO, Electric Power Research Institute (EPRI) and Nuclear Energy Institute (NEI) maintain a coordination agreement on emergency information with their member utilities.
- INPO provides the "Nuclear Network," or its replacement, electronic communications system to its members, participants, NEI, and EPRI to coordinate the flow of media and technical information about the emergency.
- Exelon Nuclear may obtain utility industry information and assistance from any party to this agreement through the coordination of INPO.

To support these functions, INPO maintains the following emergency support capabilities:

- A dedicated emergency call number.
- Designated INPO representative(s) who can be quickly dispatched to the utility emergency response organization to coordinate INPO support activities and information flow.

- The 24-hour per day operation of an Emergency Response Center at INPO headquarters.

Exelon Nuclear will notify INPO (via the designated emergency call number) for all situations involving an Alert, Site Area Emergency, or General Emergency declaration per the Exelon Nuclear Reportability Manual.

INPO has coordinated the preparation of a Voluntary Assistance Agreement for Transportation Accidents. Exelon Nuclear has signed this agreement which establishes the rights and responsibilities of electric utilities in requesting or providing assistance for response to a nuclear materials Transportation Accident.

b. American Nuclear Insurers (ANI): In early 1982, ANI issued Bulletin #5B (1981) "Accident Notification Procedures for Liability Insurers" which provides revised criteria for the notification of the Pools in the event of a nuclear emergency at one of the liability insured nuclear power reactor sites. This revision brings the ANI/MAELU (Mutual Atomic Energy Liability Underwriters) notification criteria into alignment with the standard emergency classification system adopted by the nuclear industry. This document also identifies a suitable channel for follow-up communication by ANI after initial notification.

- ANI/MAELU Emergency Assistance: In the event of an extraordinary nuclear occurrence (as defined in the Price-Anderson Law) ANI and MAELU (the insurance pools) have plans prepared to provide prompt emergency funding to affected members of the public.

- ANI/MAELU Emergency Assistance (Claims Handling Procedures): The pools' emergency assistance arrangements contemplate the mobilization and dispatch of emergency claims teams to directly dispense emergency assistance funds to affected members of the public.

  The pools should be notified in the event of a nuclear emergency requiring notification of state or Federal governmental agencies, or if the insured believes that offsite persons may be affected and financial assistance of a nature discussed may be required. In these instances, ANI expects notification as soon as possible after the initiation of the emergency. Exelon notification to the pools in the event of an Alert, Site Area Emergency, or General Emergency will be in accordance with the Exelon Nuclear Reportability Manual.

  Even if it appears to be remote that offsite persons will be affected, the pools should be notified in order that response plans can be initiated to the point of alerting teams of adjusters to stand by. Response activity can be discontinued if it proves less severe and does not require pool response.

  All nuclear occurrences of an emergency or non-emergency nature that fall under the nuclear liability policy should be reported formally in writing to ANI by the Exelon Nuclear Insurance Administrator.

- Emergency Notification and Follow-up Procedures: Pre-established lines of communication exist between each utility and ANI in order to exchange all required information during a developing emergency situation.

  ANI maintains 24-hour coverage of an emergency notification number. During normal office hours (8:00 am - 4:00 pm) their number will be answered by the receptionist who will transfer an incoming emergency call to an appropriate individual in the office. Outside of normal office hours, this telephone line is covered by an answering service. The answering service will intercept the call and obtain the name, affiliation and telephone number of the caller. They will then notify a designated ANI staff member who will in turn call back the utility to obtain appropriate information regarding the nuclear accident.

  In order that follow-up information is available to the Insurance Pool Exelon Nuclear has established the Corporate Emergency Director or their designee as a Point of Contact that ANI personnel may use to update themselves regarding the status of the emergency.

**NOTE:** For the below listed support services, the specific contractors may change but the functions are maintained.

c. Environmental Monitoring Services:

Environmental Inc.: Environmental Inc. provides emergency Radiological Environmental Monitoring Program (REMP) services for all Exelon and Exelon/AmerGen Nuclear Stations. These services include:

- Sample collection
- Handling, packaging and storage of test samples
- Sample shipment
- Chain of Custody

The Environmental Inc. Midwest Laboratory in Northbrook, Illinois would analyze the environmental samples for their radioactivity content and report results to Exelon Nuclear. The Mid-Atlantic REMP sampling activities have been subcontracted to Normandeau and Associates.

d. Teledyne Brown Engineering: Teledyne Brown Engineering provides bioassay analysis and radiochemical analysis services.

e. Department Of Energy (DOE) Radiation Emergency Assistance Center/Training Site (REAC/TS): DOE REAC/TS provides services of medical and health physics support. REAC/TS advises on the health physics aspects of situations requiring medical assistance.

f. Murray and Trettel, Inc.: Murray and Trettel, Inc. provide meteorological monitoring services, including weather forecasts. Murray and Trettel maintain all Exelon Nuclear station meteorological facilities. Murray and Trettel have computer capability to poll remotely the meteorological facilities to ascertain local conditions and to detect instrument failure at the Midwest Stations.

g. Global Dosimetry Solutions, Inc.: Global Dosimetry Solutions, Inc. provides extremity dosimetry services. In an emergency Global Dosimetry Solutions Inc. would provide additional dosimetry to the affected nuclear station and EOF, if needed.

h. Manufacturer Design and Engineering Support: Under established contracts, the following will provide available engineering expertise, specialized equipment and other services identified as needed and deemed appropriate to assist in an emergency situation:

- General Electric (GE) Nuclear Energy
- Westinghouse Electric Company

**9. Supplemental Emergency Assistance to the ERO**

Agreements are maintained (for each nuclear station) with outside support agencies who do not take part in the organizational control of the emergency that provide assistance when called on during an emergency or during the recovery phase. These agreements identify the emergency measures to be provided, the mutually accepted criteria for implementation, and the arrangements for exchange of information. These support agencies (to be named in each Station Annex) provide services of:

a. Law enforcement

b. Fire protection

c. Ambulance services

d. Medical and hospital support

Support groups providing transportation and treatment of injured station personnel are described in Section L of this plan.

Table B-1: Minimum Staffing Requirements for the Exelon ERO

| Functional Area | Major Tasks | Emergency Positions | Minimum Shift Size | Minimum Staffing *60 Minute Augmentation | Minimum Staffing Other On-Call | Full Augmentation |
|---|---|---|---|---|---|---|
| 1. Plant Operations and Assessment of Operational Aspects | Control Room Staff | Shift Manager | 1 | | | |
| | | Shift Supervisor | 1 | | | |
| | | Nuclear Station Operator | 2 | | | |
| | | Non-Licensed Operator | 2 | | | |
| 2. Emergency Direction and Control | Command and Control | Shift Emergency Director (CR) | 1[a] | | | |
| | | Station Emergency Director (TSC) | | 1 | | |
| | | Corporate Emergency Director (EOF) | | 1 | | |
| 3. Notification & Communication | Emergency Communications | Plant Shift Personnel | 1 | | | |
| | | TSC Director (TSC) | | 1 | | |
| | | EOF Director (EOF) | | 1 | | |
| | | State/Local Communicator | | 1 (EOF) | | 1 (TSC) |
| | | ENS Communicator | | 1 (TSC) | | 1 (EOF) |
| | | HPN Communicator | | 1 (EOF) | | 1 (TSC) |
| | Plant Status | OPs Communicator (CR/TSC) | | | | 2 |
| | | Operations Advisor (EOF) | | | | 1 |
| | In-Plant Team Control | Damage Control Comm. (CR/TSC/OSC) | | | | 3 |
| | Technical Activities | Technical Communicator (TSC) | | | | 1 |
| | | Technical Advisor (EOF) | | | | 1 |
| | Governmental | State Environs Communicator (EOF) | | | | (b) |
| | | EOC Communicator (EOF) | | | | 1 |
| | | State EOC Liaison (State EOC) | | | | (b) |
| | | County EOC Liaison (County EOC) | | | | (b) |
| | | Regulatory Liaison (EOF) | | | | 1 |
| 4. Radiological Assessment | Offsite Dose Assessment | Station Personnel | 1[a] | | | |
| | | Dose Assessment Coordinator (EOF) | | 1 | | |
| | | Dose Assessor (EOF) | | | | 1 |
| | | Radiation Controls Coordinator (TSC) | | | | 1 |
| | Offsite Surveys | Environmental Coordinator (EOF) | | 1 | | |
| | | Field Team Communicator (EOF) | | | | 1 |
| | | Offsite Field Team Personnel | | 4 | | (b) |
| | Onsite Surveys | Onsite Field Team Personnel | | 2 | | (b) |
| | In-plant Surveys | RP Personnel | 1 | 1 | | (b) |
| | Chemistry | Chemistry Personnel | 1 | 1 | | (b) |
| | RP Supervisory | Radiation Protection Manager(TSC/EOF) | | 2 | | |

| Functional Area | Major Tasks | Emergency Positions | Minimum Shift Size | Minimum Staffing *60 Minute Augmentation | Minimum Staffing Other On-Call | Full Augmentation |
|---|---|---|---|---|---|---|
| 5. Plant System Engineering, Repair, and Corrective Actions | Technical Support / Accident Analysis | Shift Technical Advisor (CR) | 1 | | | |
| | | Technical Manager (TSC) | | 1 | | |
| | | Core Thermal/Hydraulic Engineer (TSC) | | 1 | | |
| | | Mechanical Engineer (TSC) | | 1 | | |
| | | Electrical Engineer (TSC) | | 1 | | |
| | | SAMG Decision-Maker (TSC) | | 1[a] | | |
| | | SAMG Evaluator (TSC) | | 2[a] | | |
| | | Operations Manager (TSC) | | 1 | | |
| | | Radiation Controls Engineer (TSC) | | | | 1 |
| | | Technical Support Manager (EOF) | | | | 1 |
| | Repair and Corrective Actions | Mechanical Maintenance (OSC) | 1[a] | 2 | | (b) |
| | | Electrical/I&C Maintenance (OSC) | 1[a] | 3 | | (b) |
| | | Maintenance Manager (TSC) | | 1 | | |
| | | OSC Director (OSC) | | 1 | | |
| | | Assistant OSC Director (OSC) | | | | 1 |
| | | OPs Lead & Support Personnel (OSC) | | | | (b) |
| 6. In-Plant Protective Actions | Radiation Protection | RP Personnel | 2[a] | 4 | | (b) |
| 7. Fire Fighting | -- | Fire Brigade | 5[c] | | | |
| 8. 1st Aid and Rescue Operations | -- | Plant Personnel | 2[a] | | | (b) |
| 9. Site Access Control and Personnel Accountability | Security & Accountability | Security Team Personnel | (d) | (d) | | |
| | | Security Coordinator (TSC) | | | | 1 |
| | EOF Security | Security Coordinator (EOF) | | | | 1 |
| 10. Resource Allocation and Administration | Logistics | Logistics Manager (EOF) | | 1 | | |
| | | Logistics Coordinator (TSC) | | | | 1 |
| | Administration | Administrative Coordinator (EOF) | | | | 1 |
| | | Clerical Staff (TSC/EOF/JIC) | | | | (b) |
| | Inter Facility Logs | Events Recorder (EOF/JIC) | | | | 2 |
| | Facility Support | Computer Specialist (EOF) | | | | 1 |

| Functional Area | Major Tasks | Emergency Positions | | Minimum Shift Size | Minimum Staffing *60 Minute Augmentation | Minimum Staffing Other On-Call | Full Augmentation |
|---|---|---|---|---|---|---|---|
| 11. Public Information | Media Interface | Corporate Spokesperson | (JIC) | | | 1 | |
| | | Rad Protection Spokesperson | (JIC) | | | | 1 |
| | | Technical Spokesperson | (JIC) | | | | 1 |
| | Information Development | Public Information Director | | | | 1 | |
| | | News Writer | | | | | 1 |
| | Media Monitoring and Rumor Control | Media Monitoring Staff | | | | | (b) |
| | | Rumor Control Staff | | | | | (b) |
| | Facility Operation and Control | JIC Director | (JIC) | | | 1 | |
| | | JIC Coordinator | (JIC) | | | | 1 |
| | | Administrative Coordinator | (JIC) | | | | 1 |
| | | Access Controls | (JIC) | | | | 1 |
| | | Facility Support Staff | (JIC) | | | | (b) |
| | | | **TOTAL:** | **10** | **37** | **3** | **32[(b)]** |

* Response time is based on optimum travel conditions.

(a) May be provided by personnel assigned other functions.

(b) Personnel numbers depend on the type and extent of the emergency.

(c) Fire Brigade per FSAR/Technical Specifications, as applicable.

(d) Per Security Plan.

Note: OSC Group Leads can be used to fill technical/craft positions in Maintenance, RP and Chemistry.

**Figure B-1a: Exelon Overall ERO Command Structure**

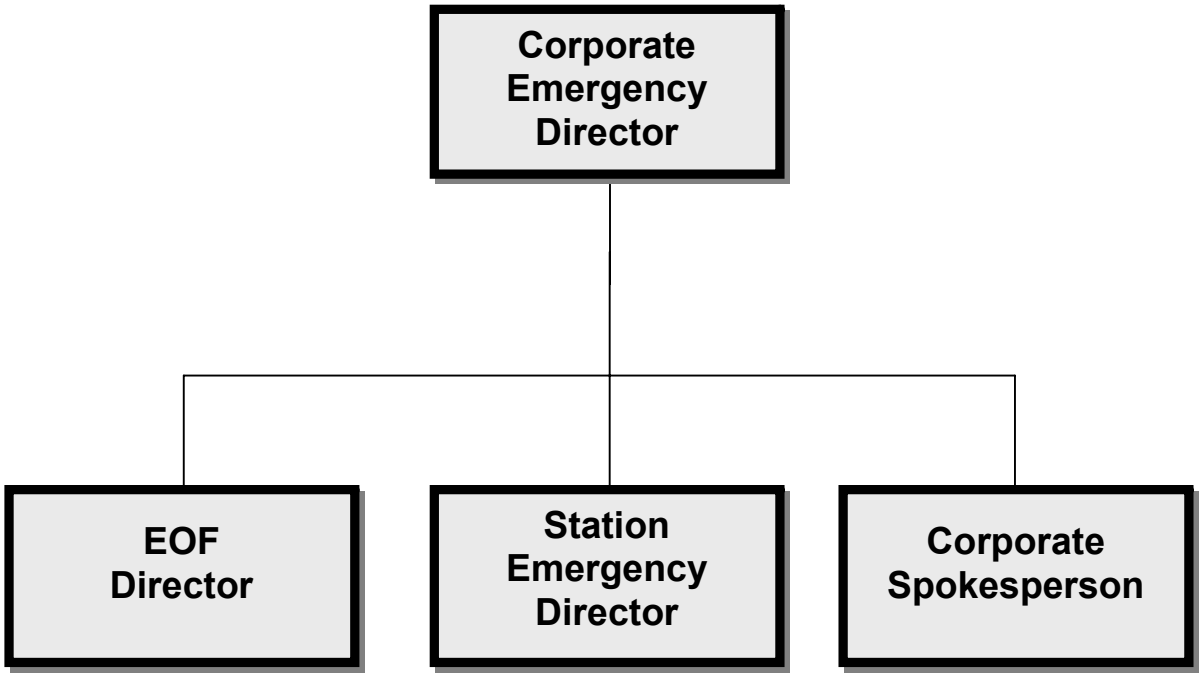


Shaded/Bold Boxes indicate minimum staffing positions.

**Figure B-1b: Emergency Onsite Organization**

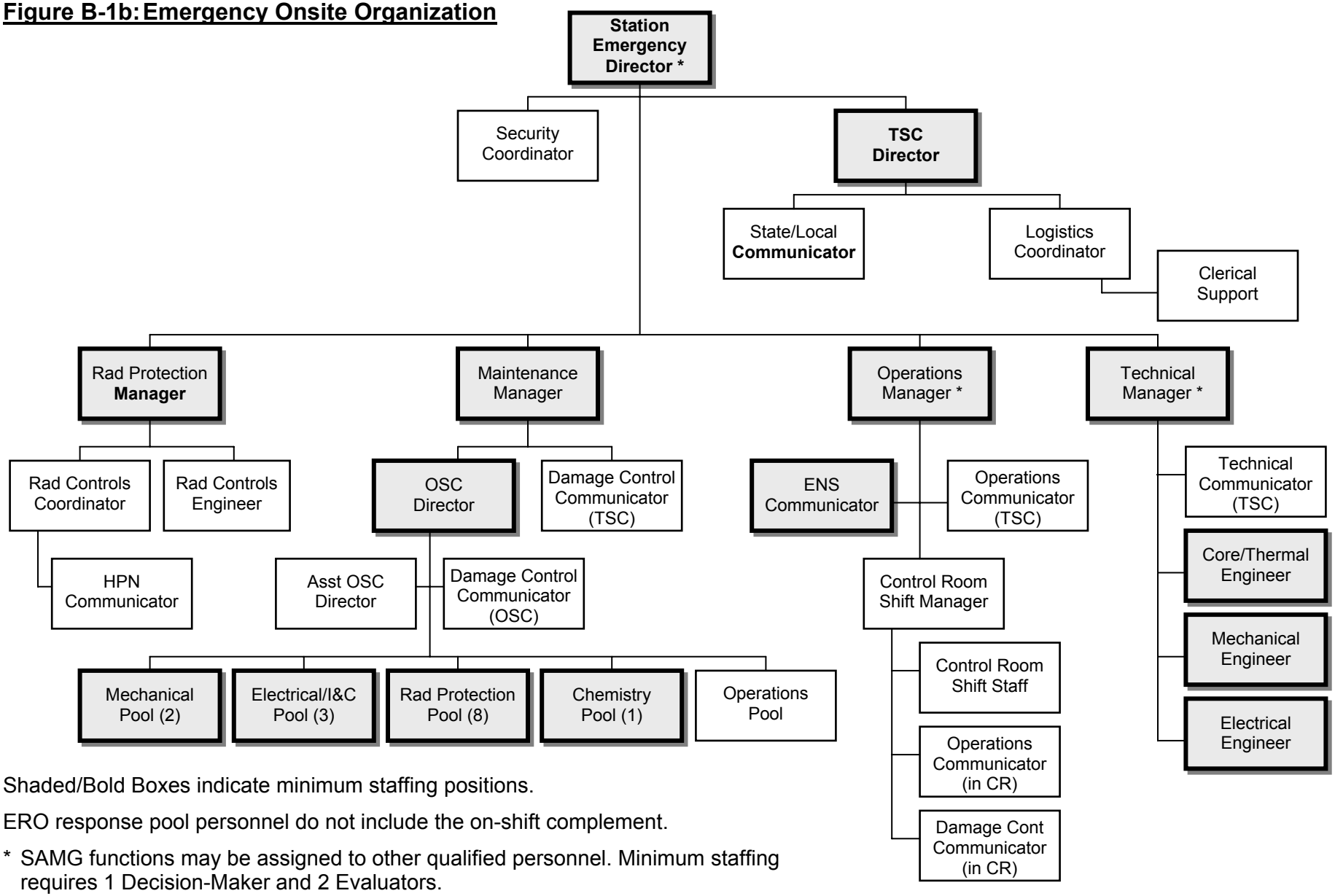


Shaded/Bold Boxes indicate minimum staffing positions.

ERO response pool personnel do not include the on-shift complement.

* SAMG functions may be assigned to other qualified personnel. Minimum staffing requires 1 Decision-Maker and 2 Evaluators.

**Figure B-1c: Emergency Offsite Organization**

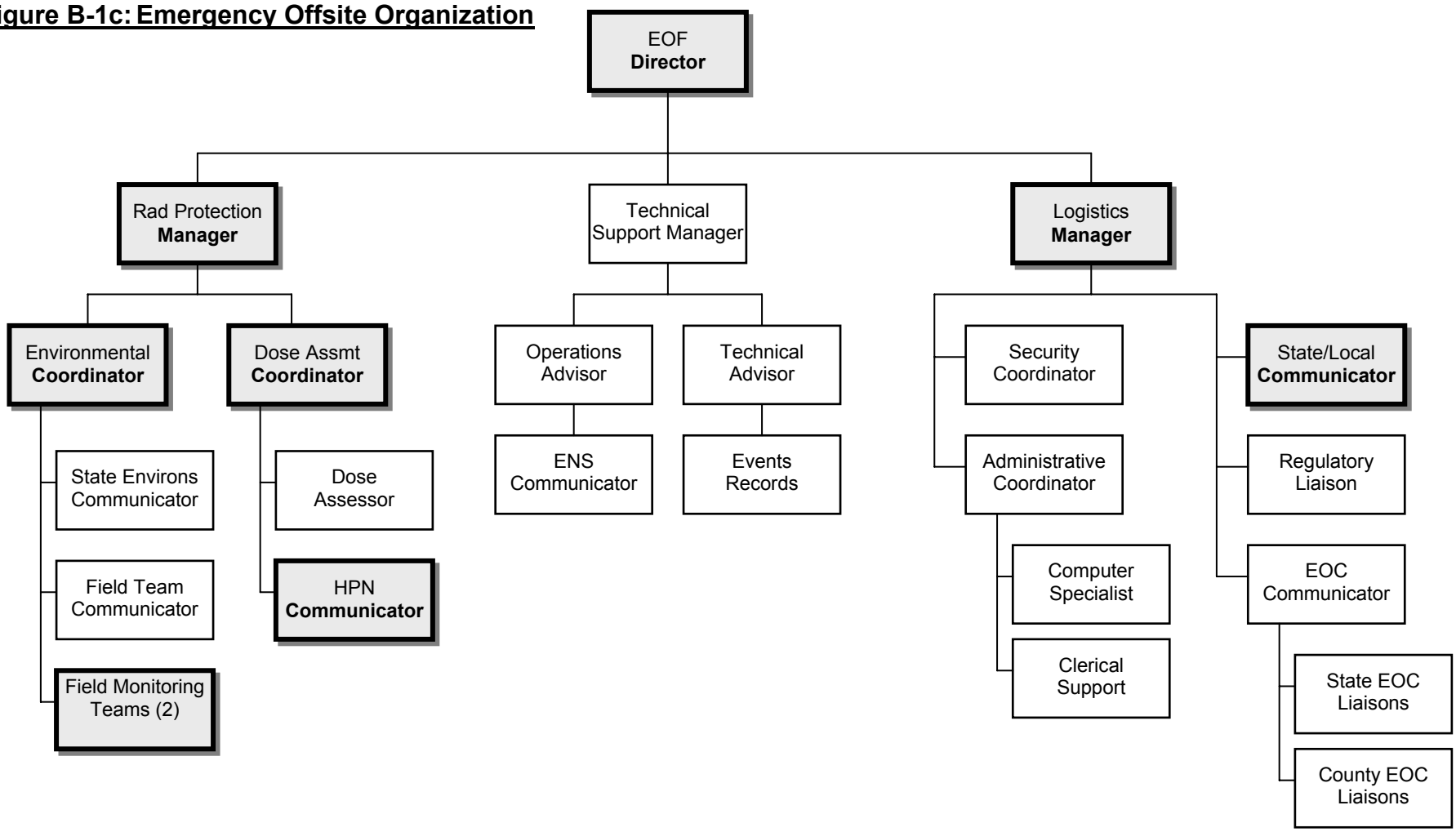


Shaded/Bolded Boxes indicate minimum staffing positions.

**Figure B-1d: Emergency Public Information Organization**

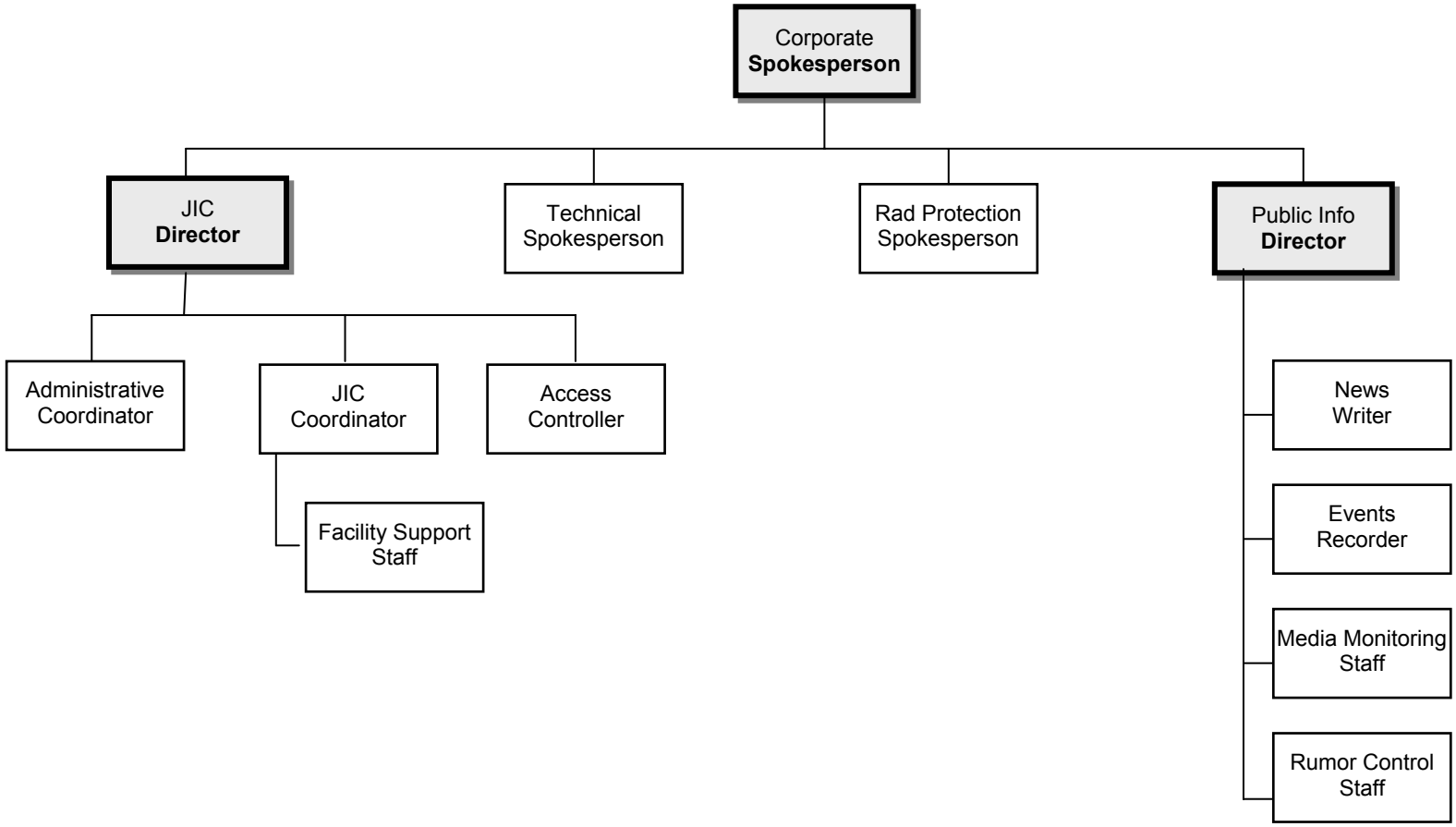


Shaded/Bolded Boxes indicate minimum staffing positions.

## Section C: Emergency Response Support and Resources

This section describes the provisions for requesting and effectively utilizing support resources and for accommodating offsite officials at the Exelon Nuclear emergency response facilities.

### 1. Federal Response Support and Resources

Assistance is available from federal agencies through the National Response Plan (NRP). The lead federal agency who provides direct assistance to Exelon during an emergency is the Nuclear Regulatory Commission (NRC). Other federal agencies, such as the Federal Emergency Management Agency (FEMA) and the Department of Energy (DOE), provide assistance to the state through implementation of the NRP.

a. Sections A and B of this plan identify the specific individuals by title who are authorized to request federal assistance.

b. Federal agencies that may provide assistance in direct support of Exelon Nuclear in the event of an accident are identified in Section A of this plan. If needed, federal resources are made available to Exelon Nuclear in an expeditious and timely manner.

c. Each emergency response facility has the equipment and communications capability necessary for a continuous high level of response, interaction, and communication among key personnel during emergency conditions. The emergency facilities are able to accommodate federal representatives with working areas provided for their use. Accommodations for the expected NRC site response team assume the following approximate numbers for each facility:

| | Initial Activation (minimum) | Full Activation |
|---|---|---|
| EOF | 9 | 16 |
| TSC | 3 | 5 |
| CR | 1 | 1 |
| JIC | 1 | 10 |

The Exelon Emergency Response Organization will provide senior management support for site response teams and communications over a Management Counterpart Link to federal response headquarters.

### 2. Liaisons

a. The NRC, FEMA, and the state(s) may dispatch representatives to the EOF where accommodations have been provided.

b. At the Alert level and above, Exelon Nuclear personnel may be assigned as liaisons to the requesting state's and/or county Emergency Operations Center (EOC). These representatives act as technical liaisons to interpret emergency action levels and protective action recommendations made by Exelon.

### 3. Radiological Laboratories

Support of the radiation monitoring and analysis effort is provided by an onsite laboratory. The onsite laboratory is the central point for receipt and analysis of all onsite samples and includes equipment for chemical analyses and for the analysis of radioactivity. Additional facilities for counting and analyzing samples can be provided by the other Exelon Nuclear generating stations, state, federal or contracted laboratory services. These laboratories can act as backup facilities in the event that the plant's counting room and laboratory become unusable or the offsite radiological monitoring and environmental sampling operation exceeds the capacity or capability of the station laboratory during an emergency. Additional outside analytical assistance may be requested from contracted vendors or state and federal agencies. The equipment and analytical capabilities for each station's laboratories are listed in the station's E-Plan Annex. The state, federal and contract laboratories maintain independent evaluation and certification processes and have the capability of quantitative analysis of terrestrial, marine and air samples.

### 4. Other Assistance

Any unaffected Exelon Nuclear Generating station is available to provide certain types of assistance and support, including engineering, design, consultation, whole body counting, and dosimetry evaluation and equipment. Additional facilities, organizations, and individuals, as listed in the Emergency Response Facilities (ERF) Telephone Directory, are available and may be used in support of emergency response. In addition, American Nuclear Insurers (ANI) provides insurance to cover Exelon legal liability up to the limits imposed by the Price-Anderson Act, for bodily injury and/or property damage caused by the nuclear energy hazard resulting from an incident at the plant. Written agreements which describe the level of assistance and resources provided to Exelon Nuclear by external sources are included in Appendix 3 as applicable.

## Section D: Emergency Classification System

This section describes the classification and emergency action level scheme used to determine the minimum response to an abnormal event at the stations. This scheme is based on plant systems, effluent parameters, and operating procedures. The initial response of federal, state, and county agencies is dependent upon information provided by the ERO. Exelon works closely with the state and county agencies to ensure consistency in classification schemes and procedural interfaces.

### 1. Emergency Classification System

The E-Plan provides for classification of emergencies into five (5) categories or conditions, covering the postulated spectrum of emergency situations. The first four (4) categories: Notification of Unusual Event (referred to as Unusual Event), Alert, Site Area Emergency, and General Emergency, are characterized by Emergency Action Levels (EALs) or event initiating conditions and address emergencies of increasing severity. The fifth, the Recovery classification, is unique in that it may be viewed as a phase of the emergency requiring specific criteria to be met and/or considered prior to its declaration. Recovery is that period when the emergency phase is over and activities are in progress to return the situation to a normal state (acceptable condition).

a. Unusual Event - Events are in process or have occurred which indicate a potential degradation of the level of safety of the plant or indicate a security threat to facility protection has been initiated. No releases of radioactive material requiring offsite response or monitoring are expected unless further degradation of safety systems occurs.

   This is the least severe of the four (4) levels. The purpose of this classification is to bring response personnel and offsite agencies to a state of readiness in the event the situation degrades and to provide systematic handling of information and decision making. The Shift Manager, as Shift Emergency Director will classify an Unusual Event.

   Required actions at this classification include:

   - Notifications to station management and the NDO.
   - Notification, within 15 minutes, of the state and local communities.
   - At the discretion of the Emergency Director, station management or the Nuclear Duty Officer (NDO), full or selective staffing of the TSC, OSC and EOF may be initiated.
   - Notification of the Nuclear Regulatory Commission (NRC) as soon as possible but within 60 minutes of classification.
   - Assessment of the situation and response as necessary, which may include escalating to a higher classification if conditions warrant.

- When the event is terminated, close-out is performed over communication links to offsite authorities participating in the response (i.e., NRC, state, county), followed by formal transmission of a state/local notification form within 24 hours.

b. Alert - Events are in process or have occurred which indicate an actual or potential substantial degradation of the level of safety of the plant or a security event that involves probable life threatening risk to site personnel or damage to site equipment because of HOSTILE ACTION. Any releases are expected to be limited to small fractions of EPA Protective Action Guideline exposure levels.

The purpose of this classification is to ensure that emergency response personnel are readily available and to provide offsite authorities with current status information. An Alert will be classified as the initiating event or as escalation from an Unusual Event. In either case, the classification will most likely made by the Shift Manager (Shift Emergency Director) prior to the transfer of Command and Control.

Required actions at this classification include:

- Notifications to station management and the NDO.
- Notification, within 15 minutes, of the state and local communities. The EOF will assume state update responsibilities.
- Activation of the TSC, OSC, EOF, and the JIC organizations.
- Transfer of Command and Control.
- Notification of the NRC as soon as possible but within 60 minutes of classification.
- Notification of INPO and ANI.
- Assessment of the situation and response as necessary, which may include escalating to a higher classification if conditions warrant.
- On-site and off-site Field Monitoring Teams are sent to staging areas or dispatched to monitor for releases of radiation to the environment.
- Keeping offsite authorities informed of plant status by providing periodic updates to include meteorological and radiological data.
- When the event is terminated, notification is performed over communication links followed by an Initial Incident Report to offsite authorities participating in the response (i.e., NRC, state, county) within 8 hours.

c. Site Area Emergency - Events are in process or have occurred which involve actual or likely major failures of plant functions needed for protection of the public or HOSTILE ACTION that results in intentional damage or malicious acts; 1) toward site personnel or equipment that could lead to the likely failure of or; 2) that prevent effective access to equipment needed for the protection of the public. Any releases are not expected to result in exposure levels which exceed EPA Protective Action Guideline exposure levels beyond the site boundary.

   The purpose of this classification, in addition to those of the Alert level, is to ensure that all emergency response centers are staffed and provisions are made for information updates to the public through offsite authorities and the news media. The classification will most likely be made by the Station Emergency Director following activation of the TSC.

   Required actions at this classification, in addition to those listed under the Alert level, include:

   - If not previously performed, Assembly/Accountability shall be performed and Site Evacuation of non-essential personnel shall be initiated.
   - Keeping offsite authorities informed of plant status by providing periodic updates to include meteorological data and projected or actual doses for any releases that have occurred.

d. General Emergency - Event(s) are in process or have occurred which involve actual or imminent substantial core degradation or melting with potential for loss of containment integrity or HOSTILE ACTION that results in an actual loss of physical control of the facility. Releases can be reasonably expected to exceed EPA Protective Action Guideline exposure levels offsite for more than the immediate site area.

   The purpose of this classification, in addition to those of the Site Area Emergency level, is to initiate predetermined protective actions for the public and provide continuous assessment of information from monitoring groups. The classification will most likely be made by the Station Emergency Director following activation of the TSC.

   Required actions at this classification, in addition to those listed under the Alert and Site Area Emergency, include:

   - A Protective Action Recommendation will be determined.
   - Assessment of the situation and response as necessary.

e. Recovery: That period when the emergency phase is over and activities are being taken to return the situation to a normal state (acceptable condition). The plant is under control and no potential for further degradation to the plant or the environment is believed to exist.

   Recovery will be classified by the Station Emergency Director after obtaining authorization from the Corporate Emergency Director.

   Required actions at this classification include:

   - The affected state(s) and the NRC should be consulted prior to entry into Recovery.
   - Notifications will be made to station management, the NDO, state(s) and NRC.
   - A Recovery organization will be established to manage repairs to return the Unit to an acceptable condition, and support environmental monitoring activities as requested in coordination with Federal and state efforts.
   - INPO and ANI are notified of Recovery classification.

f. Classification Downgrading: Exelon Nuclear policy is that emergency classifications shall not be downgraded to a lower classification. Once declared, the event shall remain in effect until no Classification is warranted or until such time as conditions warrant classification to Recovery.

g. Guidance for Termination of an Emergency: The purpose of terminating an emergency is to provide an orderly turnover of plant control from the Emergency Response Organizations to the normal Exelon Nuclear plant organization. Termination of the emergency is authorized by the Emergency Director in Command and Control. The considerations provided in the Recovery/Termination Checklist in the emergency implementing procedures must be performed prior to exiting the emergency event. Consultation with governmental agencies and other parties should be conducted prior to termination of an event classified as Site Area or General Emergency. Notifications shall be transmitted to appropriate agencies to terminate an event.

h. Station Nuclear Security Plan: Each nuclear station has a Security Plan that complies with the requirements of 10 CFR 73. The interface between the E-Plan and the Security Plan is one of parallel operation. The plans are compatible. The E-Plan response measures, once initiated, are executed in parallel with measures taken in accordance with the Security Plan.

   Threats made to Exelon Nuclear facilities are evaluated in accordance with established threat assessment procedures and the respective Security Plans. The Security Plan, Appendix C, Contingency Events, identifies situations that could be initiating conditions for EAL classifications. Contingency events include bomb threats, attack threats, civil disturbances, protected area intrusions, loss of

guard/post contact, vital area intrusions, bomb devices discovered, loss of guard force, hostages, extortion, fire/explosions, internal disturbances, security communications failure, and obvious attempts of tampering. The Security Plan provides guidance for decisions and actions to be taken for each security contingency event. As guidance, the Security Plan allows for differing responses depending upon the assessment of the actual situation within each contingency event classification.

The assessment of any security contingency event and the decision to initiate, or not to implement the E-Plan, will be the responsibility of the Shift or Station Emergency Director. All identified security contingency events have the potential of being assessed as initiating conditions for a radiological emergency declaration.

Determination of a credible security threat may require the staffing of emergency response facilities based on the classification of an Unusual Event per the Emergency Action Levels (EALs).

**2. Emergency Action Level Technical Bases**

Station Annexes include Site Specific Emergency Action Levels (EALs) consistent with the general class descriptions and provided in NEI guidance documentation in accordance with Regulatory Guide 1.101, “Emergency Planning and Preparedness for Nuclear Power Reactors.” Where possible, these EALs will be related to plant instrumentation readings.

Emergency classifications are characterized by Emergency Action Levels (EALs). The Threshold Values are referenced whenever an Initiating Condition is reached. An Initiating Condition is one of a predetermined subset of unit conditions where either the potential exists for a radiological emergency, or such an emergency has occurred. Defined in this manner, an Initiating Condition is an emergency condition, which sets it apart from the broad class of conditions that may or may not have the potential to escalate into a radiological emergency. Initiating Conditions are arranged in one of the Recognition Categories.

EALs are for unplanned events. A planned evolution involves preplanning to address the limitations imposed by the condition, the performance of required surveillance testing, and the implementation of specific controls prior to knowingly entering the condition. Planned evolutions to test, manipulate, repair, perform maintenance or modifications to systems and equipment that result in an EAL Threshold Value being met or exceeded are not subject to classification and activation requirements as long as the evolution proceeds as planned. However, these conditions may be subject to the reporting requirements of 10 CFR 50.72.

An emergency is classified after assessing abnormal plant conditions and comparing them to EAL Threshold Values for the appropriate Initiating Conditions. Classifications are based on the evaluation of each unit for multi-reactor sites. Matrix tables organized by recognition categories are used to facilitate the comparison. The matrix tables are used when the unit is in the Technical Specification defined modes

of Power Operations, Hot Standby, Hot Shutdown (for classifications purposes, startup evolutions are included in the Power Operations mode) and Cold Shutdown or Refueling (for classification purposes a defueled plant will be considered in the Refueling mode).

All recognition categories should be reviewed for applicability prior to classification. The initiating conditions are coded with a letter and/or number designator. All initiating conditions, which describe the severity of a common condition (series), have the same initial designator.

**3. Offsite Classification Systems**

Exelon Nuclear works with the state to ensure consistency between classification schemes. The content of the EALs is reviewed with the state and county authorities on an annual basis. Concurrence is obtained from state and county authorities for EAL scheme changes.

**4. Offsite Emergency Procedures**

Exelon Nuclear works with the state and county authorities to ensure that procedures are in place that provide for emergency actions to be taken which are consistent with the protective actions recommended by Exelon accounting for local offsite conditions that exist at the time of the emergency.

## Section E: Notification Methods and Procedures

This section describes the notification of state and county response organizations and Exelon emergency response personnel. It outlines the content of initial and follow-up messages to response organizations within the Plume Exposure Pathway Emergency Planning Zone (EPZ).

### 1. Bases for Emergency Response Organization Notification

Exelon Nuclear, in cooperation with state and county authorities, has established mutually agreeable methods and procedures for notification of offsite response organizations consistent with the emergency classification and action level scheme. Notifications to offsite agencies include a means of verification or authentication such as the use of dedicated communications networks, verification code words, or providing call back verification phone numbers.

Notification/Classification for Dual Unit Emergencies: when the classification involves both units of a dual unit facility (i.e., tornado or earthquake), the classification shall be reported as affecting both units.

In situations when both units of a dual unit facility are affected by emergency events, but the events are not related or the classification for each unit is different, notification will be made for the highest classification. Clarification of the relationship between the classification levels determined for the units should be provided in the periodic state updates and the NRC Event Notification Worksheet.

In situations when one unit is affected by unrelated events, notification will be made for the highest classification via the state/local notification and the second event information provided in the periodic state updates.

Notification for Transportation Accidents: A Transportation Accident is defined in 49 CFR 171.15 and 49 CFR 171.16. If a Transportation Accident involving material in the custody of an Exelon facility occurs, Exelon Nuclear will notify the appropriate internal and offsite agencies in accordance with the Exelon Nuclear Reportability Manual.

### 2. Notification and Mobilization of Emergency Response Personnel

Emergency implementing procedures are established for notification and mobilization of emergency response personnel as follows:

a. Onsite: When an emergency is declared, reclassified, or terminated an announcement is made (over the plant public address system or by other means) that includes the emergency classification declared and response actions to be taken by site personnel.

   At the Unusual Event classification, select ERO augmentation personnel are notified and requested to remain available to respond. At an Alert classification or higher ERO augmentation personnel are notified for activation of the TSC, OSC, EOF, and JIC using the ERO Notification System or, a system of pagers and/or call trees via commercial telephone as back-up.

b. Offsite: Notifications are promptly made to offsite emergency response organizations as follows:

1) State/Local Agencies: A notification shall be made within fifteen (15) minutes of:

- The initial emergency classification.
- Classification escalation.
- The issuance of or change to a Protective Action Recommendation (PAR) for the general public.
- Changes in radiological release status, occurring outside of an event classification or PAR notification, based on an agreement with the state(s).

The emergency warning points are simultaneously notified using the Nuclear Accident Reporting System (NARS), or a commercial telephone line as backup.

A notification will also be initiated to cognizant state/local government agencies as soon as possible but within one hour of the termination of an event classification, or entry into Recovery Phase.

2) Nuclear Regulatory Commission (NRC): An event will be reported to the NRC Operations Center immediately after notification of the appropriate state or local agencies but not later than one (1) hour after the time of initial classification, escalation, termination or entry into the Recovery Phase. The NRC is notified by a dedicated telephone system called the Emergency Notification System (ENS). If the ENS is inoperative, the required notifications is made via commercial telephone service, other dedicated telephone service, or any other method that shall ensure that a report is made as soon as practical. An NRC Event Notification Worksheet should be utilized to transmit initial information to the NRC. If a continuous communication is requested and established, a log is used in lieu of the ENS Worksheet.

Specific requirements for the notifications to the NRC for classified emergency events are detailed in 10 CFR 50.72 with guidance provided in the Exelon Reportability Manual.

The computerized data link to the NRC, referred to as the Emergency Response Data System (ERDS), will be initiated within one hour of the declaration of an Alert classification or higher.

Mobilization of federal, state, and county response organizations is performed in accordance with their applicable emergency plan and procedures. At a minimum, mobilization of federal response organizations and activation of state and county EOCs is expected to occur at the declaration of a Site Area Emergency.

The state and county authorities are responsible for the process of notification of the general public.

c. Support Organizations: When an emergency is initially classified, escalated or terminated, notifications are promptly made to the following support organizations:

- Medical, rescue, and fire fighting support services are notified for assistance as the situation dictates.
- The Institute of Nuclear Power Operations (INPO) is notified at an Alert or higher classification with requests for assistance as necessary.
- The American Nuclear Insurers (ANI) are notified at an Alert or higher classification with requests for assistance as necessary.
- Vendor and contractor support services are notified for assistance as the situation dictates.

**3. Initial Notification Messages**

Exelon Nuclear, in conjunction with state and county authorities, has established the contents of the initial notification message form transmitted during a classified emergency. The contents of the form include, as a minimum:

- Designation ("This is a Drill" or "Actual Event").
- Identity of site.
- Event classification.
- EAL number (as agreed upon with state authorities).
- Non-technical event description (as agreed upon with state authorities).
- Date and time of declaration (or entry into Recovery or Termination).
- Whether a release is taking place (Note: “Release” means a radiological release attributable to the emergency event.)
- Wind direction and speed.
- Whether offsite protective measures may be necessary.
- Potentially affected Subareas (or Sectors as applicable) when a General Emergency is declared.

Notification approval, transmittal date and time, and offsite agencies contacted are recorded either on the notification form or in an event logbook.

**4. Follow-up Messages**

For all emergency classifications, update messages to state authorities will be provided at the time of the notification on a prearranged frequency. The facility in Command and Control is responsible for ensuring that the updates are completed. State updates contain the prearranged information plus any additional information requested at the time of the notification.

Follow-up notifications are provided to the NRC Operations Center as soon as possible, but not later than one (I) hour after significant new information is available involving:

a. The results of evaluations or assessments of plant conditions.

b. The effectiveness of response or protective measures taken.

c. Information related to plant behavior that is not understood.

If requested by the NRC, an open, continuous communications channel will be maintained with the NRC Operations Center over the Emergency Notification System (ENS) and/or Health Physics Network (HPN) Circuits.

**5. State and County Information Dissemination**

The state and county emergency response plans describe procedures for state and county officials to make a public notification decision promptly (within about 15 minutes) on being informed by the plant of an emergency. The system for disseminating information to the public includes notification by pre-scripted messages through appropriate broadcast media such as the Emergency Alert System (EAS).

**6. Notification of the Public**

The capability exists for the prompt notification of the general public within the Plume Exposure Pathway Emergency Planning Zones (EPZs) for Exelon Nuclear stations covered under this plan.

This notification capability consists of two principal elements: (1) the Alert and Notification Systems (ANS) and (2) the Emergency Alerting System (EAS) radio stations.

- The Alert and Notification System (ANS) consists of fixed sirens and vehicles with public address (PA) systems. Activation of the ANS sirens by the civil authorities will alert the public to turn on their radios to a local EAS radio station for detailed information on the emergency situation.

- The Emergency Alerting System (EAS) is a network of local radio stations prepared to transmit or relay emergency information and instructions from the civil authorities to the general public.

The ANS is operated by local governmental agencies and maintained by Exelon Nuclear. To assure the ANS is maintained in an operational readiness posture, the local agencies have agreed to test the system (by sounding the sirens) on a periodic basis that meets or exceeds FEMA guidance and to report inoperable equipment to EP-designated maintenance personnel. The goal of the testing and maintenance program is to identify inoperable equipment in a timely manner and to restore equipment to a functional status commensurate with FEMA operability requirements as referenced in FEMA-REP-10, "Guide for the Evaluation of Alert and Notification Systems for Nuclear Power Plants" Section E.6.2.1. In addition to this routine test and repair program, preventive maintenance of the ANS will be performed on an annual basis.

A more site-specific description of the various prompt public notification systems is presented in the station specific annexes to the E-Plan. The activation of the ANS sirens, deployment of emergency service vehicles and operation of the Emergency Alerting System is discussed in detail in the state specific response plans.

**7. Messages to the Public**

The respective States have developed EAS messages for the public consistent with the classification scheme. These draft messages are included as part of the States' Emergency Plan and contain instructions with regard to specific protective actions to be taken by occupants and visitors of affected areas. Messages may include instructions such as: take shelter and go indoors, close windows and doors, turn off ventilation systems; directions given for evacuation; directions to stay tuned to specific stations for further information, ad-hoc respiratory protection, (e.g. handkerchief over mouth, etc.). Exelon will provide support for the content of these messages when requested. The States control the distribution of radio protective drugs to the general public.

## Section F: Emergency Communications

This section describes the provisions utilized for prompt communications among principal emergency response organizations, communications with the ERO and communications with the general public.

**1. Communications/Notifications**

Exelon Nuclear has extensive and reliable communication systems installed at its generating stations and Corporate Headquarters. Examples of the communications network include systems such as normal and dedicated telephone lines on landlines, microwave and fiber-optic voice channels, cell phones, satellite phones, mobile radio units, handi-talkies and computer peripherals. This network provides:

- Voice communication through normal telephone, dedicated line and automatic ring-down between selected facilities, conference call capability, speaker phones, and operator assistance where required.
- Communications between selected Exelon vehicles and appropriate fixed locations, as well as with state mobile units and fixed locations.
- Facsimile, network, and modem transmission.

Figure F-1 depicts the initial notification paths and the organizational titles from the Exelon Nuclear Emergency Response Facilities (ERFs) to federal, state and local emergency response organizations, and industry support agencies. The Exelon primary and alternate methods of communication, and the NRC communications network, are illustrated on Figures F-2 and F-3.

a. Exelon Nuclear maintains the capability to make initial notifications to the designated offsite agencies on a 24-hour per day basis. The offsite notification system, referred to as the Nuclear Accident Reporting System (NARS) provides communications to state and county warning points and Emergency Operations Centers from the CR, TSC, and EOF. Backup methods include facsimile and commercial telephone lines. state and county warning points are continuously staffed.

b-d. Exelon Nuclear has established several dedicated communication systems that ensure reliable and timely exchange of information necessary to provide effective Command and Control over any emergency response; (1) between Exelon and state and local agencies within the EPZs, (2) with federal emergency response organizations, (3) between the plant, the EOF, and the state and county EOCs, and (4) between Emergency Response Facilities and Field Monitoring Teams. A general description of the systems is as follows:

1) Nuclear Accident Reporting System (NARS): The NARS is a dedicated communications system that has been installed for the purpose of notifying state and local authorities of declared nuclear emergencies. This system links together the station Control Rooms, the EOF, TSCs and state and local authorities as appropriate. The specific design, operation, and responsibility for maintenance of the NARS systems vary between Exelon Nuclear regions.

2) Damage Control Line: A dedicated telephone link called the Damage Control Line that enables communication between the Control Room, the TSC and the OSC to coordinate the dispatching of emergency damage control teams from the OSC (see Figure F-2).

3) Operations Status Line: A dedicated telephone link called the Operations Status Line that enables communication between the Control Room, the TSC and the EOF to monitor the activities of the Control Room staff (see Figure F-2).

4) Technical Conference Line: A dedicated telephone line called the Technical Conference Line between the TSC and the EOF to communicate mitigating activities and priorities for the station to the EOF (see Figure F-2).

5) Director's Hotline: A dedicated telephone link called the Director's Hotline that enables direct Emergency Director communication between the Control Room, TSC, and the EOF (see Figure F-2).

6) Private Branch Exchange (PBX) Telephone System: The PBX telephone system provides communication capability between telephones located within the plant by dialing a four-digit station code. The PBX is used to connect the CR, TSC, EOF, and OSC. The PBX telephone system also provides for outside communications through interconnections with the corporate telephone communications system and commercial telephone lines.

7) Local Commercial Telephone System: This system provides standard commercial telephone service through the public infrastructure, consisting of central offices and the wire line and microwave carrier. The commercial telephone system includes connections to PBX, emergency telephone system, dedicated lines to emergency facilities, and lines to the JICs. The commercial vendor provides primary and secondary power for their lines at their central office.

8) Emergency Response Data System (ERDS): The ERDS will supply the NRC with selected plant data points on a near real time basis. ERDS is activated by the ERO as soon as possible but not later than one hour after declaration of an Alert, Site Area Emergency or General Emergency. The selected data points are transmitted automatically to the NRC at approximately 1-minute intervals.

9) Field Monitoring Team (FMT) Communications: A separate communications system has been installed to allow coordinated environmental monitoring and assessment during an emergency. This system consists of the necessary hardware to allow communication between the Control Room, TSC, EOF, and mobile units in Exelon Nuclear vehicles. Though direct communications between the Control Room and the FMTs is not required per the prescribed methods of FMT coordination, the FMTs can be contacted from equipment in the Control Room if required. Commercial cell phones or other means are available as back up to the primary field team communications system.

In addition, station communication links exist to ensure appropriate information transfer capabilities during an emergency. The station may also utilize its Public Address System, station radios and pagers to augment its emergency communications.

e. ERO Notification System: Exelon Nuclear utilizes an automated ERO Notification System to rapidly notify members of the ERO. The system consists of a computer with modem equipment capable of initiating and receiving telephone calls. When contact is made, the system automatically requests an identification number and then responds. One of the calls made by the system is to the paging system vendor. The pager vendor's system accepts group and individual numbers from the ERO Notification System, activating several radio transmitters which, in turn, activates personal pagers belonging to members of the ERO. The system is designed with redundant power, phone and computer components with geographic separation. Implementing procedures specify the course of action to be taken if the ERO Notification System fails that require station personnel to manually activate the ERO group page feature and/or directly call-out key emergency response personnel.

f. NRC Communications (ENS and HPN)

Communications with the NRC Operations Center will be performed via the NRC ENS and HPN circuits or commercial telephone line. Information is normally communicated from an approved NRC Event Notification Worksheet prior to establishing an open ENS and/or HPN line.

The actual configuration of these systems may vary from station to station. Installation and use of these NRC telephones is under the direction of the NRC (see Figure F-3).

Emergency Notification System (ENS): Dedicated telephone equipment is in place between each nuclear station's Control Room and the NRC, with an extension of that line in the TSC. A separate line is available in the EOF with the capability of being patched with the station through the NRC. This line is used for NRC event notifications and status updates.

Health Physics Network (HPN): There also exists a separate dedicated telephone between the NRC, the TSC, and EOF for conveying health physics information to the NRC as requested or as an open line.

**2. Medical Communications**

Communications are established with the primary and backup medical hospitals and transportation services via commercial telephone that is accessed by station personnel.

**3. Communications Testing**

Communications equipment is checked in accordance with Section H.10. Communications drills between Exelon Nuclear and state and county government facilities are conducted in accordance with Section N.2.a. In addition, minimum siren testing is performed as follows:

Silent Test ..... At least weekly

Growl (or Equipment) Test ..... Quarterly and during preventive maintenance

Full Volume Test ..... Annually

**Figure F-1: Exelon Notification Scheme (For Full Augmentation)**

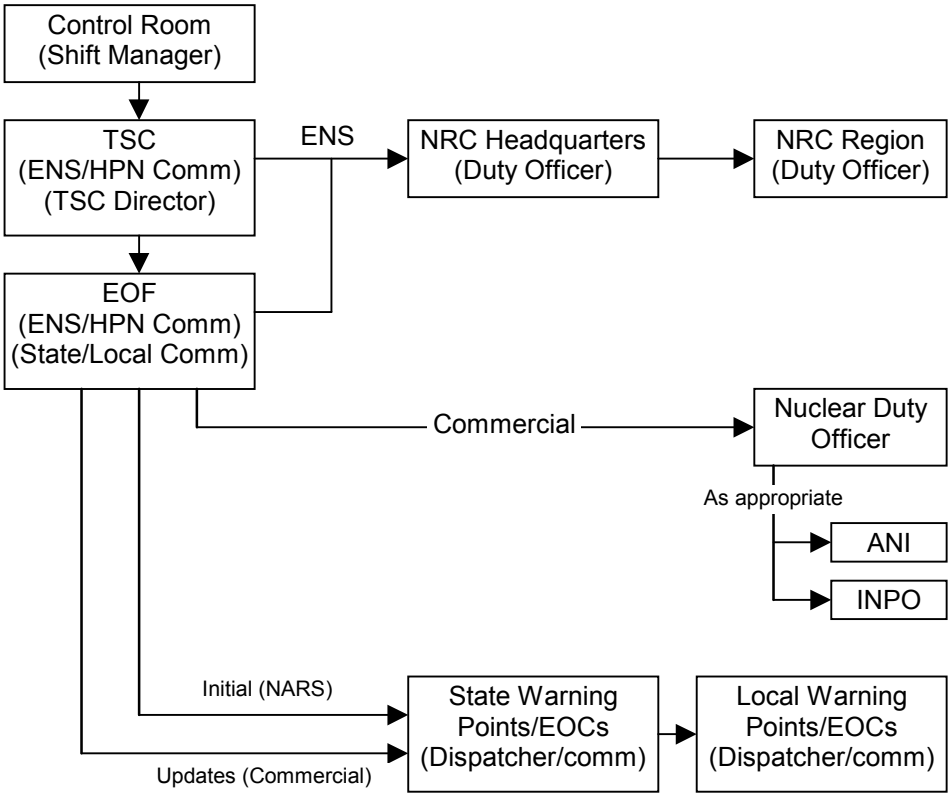

**Figure F-2: ERF Communications Matrix**

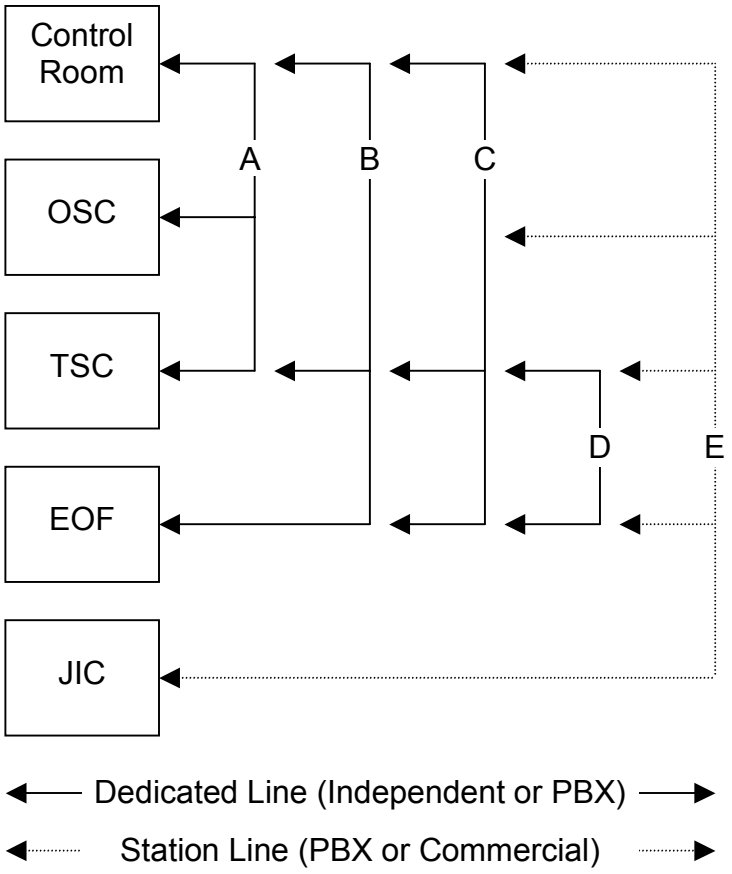


A = Damage Control Line between the OSC, TSC, and Control Room.

B = Directors Hotline line between the Control Room, TSC and EOF.

C = Operations Line between the TSC, Control Room and EOF.

D = Technical Conference Line between the TSC and EOF.

E = Station telephone line.

**Figure F-3: NRC Communications for Nuclear Response**

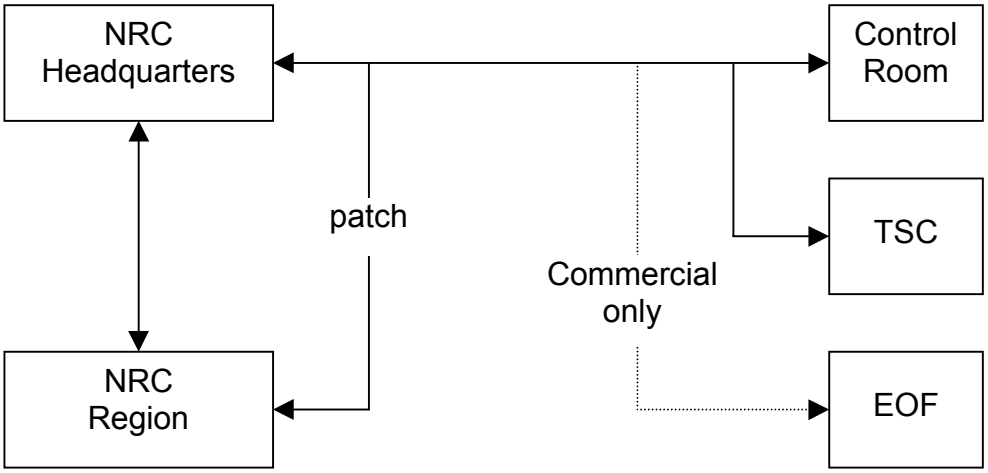


**NOTE:** ENS and HPN circuits may use the Federally maintained system, company tie lines or PBX as dedicated primary communications systems and have commercial backups.

## Section G: Public Education and Information

This section describes the Exelon Nuclear public education and information program. It outlines the methods for distributing public information materials on an annual basis and describes how the public is informed in the event of an emergency.

**1. Public Information Publication**

The state has overall responsibility for maintaining a continuing disaster preparedness public education program. The emergency public information publication for the Exelon Nuclear generating stations is updated annually, in coordination with state and county agencies, to address how the general public is notified and what their actions should be in an emergency. Exelon distributes the publication on an annual basis by mail to all residents within the ten-mile plume exposure EPZs and to appropriate locations where a transient population may obtain a copy. The public information publication includes the following information:

a. Educational information on radiation.

b. A description of the times that require public notification (what to do if a take-shelter or evacuate recommendation is given).

c. A map of major evacuation routes.

d. A list of communities likely to serve as host shelter areas and instructions on how to obtain additional information, especially for the disabled or their caretakers and those without transportation.

**2. Public Education Materials**

Public information publications instruct the public to go indoors and turn on their radios when they hear the ANS sirens operating. These publications also identify the local radio stations to which the public should tune in for information related to the emergency.

**3. Media Accommodations**

a. The Exelon Communications and Public Affairs Department is notified when an Unusual Event or higher Emergency condition exists. They will handle public and media inquires in the early stages of the event (until the JIC is activated) by distributing background information, news releases, and providing information to corporate management.

1) The Emergency Public Information Organization: The Emergency Public Information Organization is part of the Corporate ERO. It may be activated at any time at the discretion of the Nuclear Duty Officer. However, when there is a procedural requirement to activate the EOF, the Emergency Public Information Organization shall also be activated.

The primary purpose of the Emergency Public Information Organization is to disseminate information from Exelon Nuclear's ERO about the emergency events to the public, via the news media. However, the authority for issuance of news releases for the classification of an Unusual Event or prior to ERO activation will always reside with the Exelon Communications and Public Affairs Department. Upon activation, the Emergency Public Information Organization has the responsibility and authority for issuance of news releases to the public.

The Emergency Public Information Organization is comprised of senior managers from Exelon Nuclear who will function as spokespersons, and other Exelon Nuclear individuals including personnel from the Governmental Affairs and Human Relations areas. Exelon Nuclear's spokespersons disseminate information to the news media/public concerning the emergency events out of a Joint Information Center (JIC).

2) The Joint Information Center (JIC): The JIC is the facility in which media personnel gather to receive information related to the emergency event. The JIC is the location where approved news releases will be provided to the media for dissemination to the public. News releases are coordinated between the EOF and JIC personnel and state and/or Federal representatives in the JIC. Exelon public information personnel operate from the EOF and the JIC, which is under the direction of the Corporate Spokesperson and functions as the single point contact to interface with Federal, state, and local authorities who are responsible for disseminating information to the public.

   Each station has a designated JIC. Each JIC is equipped with appropriate seating, lighting and visual aids to allow for public announcements and briefings to be given to the news media. Additionally, JICs are equipped with commercial telephone lines for making outgoing calls. The Emergency Public Information Organization functions from the JIC and EOF in preparing and releasing utility information about the emergency event. The JIC is activated at the declaration of an Alert or higher classification. Functions of the JIC include:

   - Serving as the primary location for accumulating accurate and current information regarding the emergency conditions and writing news releases.
   - Providing work space and phones for public information personnel from the state, counties, NRC, FEMA, and industry-related organizations.
   - Providing telephones for use by the news media personnel.
   - Providing responses to media inquiries through Media Monitoring Staff telephones that the media can call for information about an emergency.

b. The news media is not permitted into the EOF during an emergency.

**4. Coordination of Public Information**

a. The JIC is staffed by Exelon and government public information representatives who will be the source of public information during an emergency at the station. The Corporate Spokesperson is the primary spokesperson for Exelon Nuclear. The Corporate Spokesperson has direct access to all necessary information (see Section B.5).

b. The JIC is staffed by federal, state, county, and utility personnel to assure timely, periodic exchange and coordination of information. Representatives coordinate information prior to conducting news briefings.

c. Rumors or misinformation are identified during an emergency by the media/rumor control monitors. They respond to public and news media calls and monitor media reports.

d. The common MW Region JIC is located west of Chicago, in Warrenville IL, in the Exelon Nuclear Cantera facility. This facility supports the Braidwood, Byron, Clinton, Dresden, LaSalle and Quad Cities stations.

The JIC for the MA Region Limerick and Peach Bottom Stations is co-located with the EOF at 175 North Caln Road, Coatesville, Pennsylvania.

The JIC for the Oyster Creek Station is co-located with the EOF at 1268 Rt. 37 West, Toms River, NJ.

The JIC for the Victoria County Station is co-located with the EOF at 205 North Bridge Street, Victoria, Texas.

**5. Media Orientation**

Emergency Preparedness, in conjunction with Exelon Communications and Public Affairs Department, offers training (at least annually) to acquaint news media with the E-Plan, information concerning radiation, and points of contact for release of public information in an emergency. Training is provided for those media agencies that accept the training offer.

## Section H: Emergency Facilities and Equipment

Onsite and offsite facilities are available for emergency assessment, communications, first aid and medical care, and damage control. Of particular importance are the Emergency Response Facilities (ERFs); the Control Room (CR), the Technical Support Center (TSC), the Operations Support Center (OSC), the Emergency Operations Facility (EOF), and the Joint Information Center (JIC).

This section describes the emergency facilities and equipment used by the Emergency Response Organization and outlines the requirements which aid in timely and accurate response actions. It also describes the surveillance programs used to monitor and ensure that these facilities and equipment are maintained in a high degree of constant readiness.

### 1. Control Room, Technical Support Center, and Operations Support Center

Exelon Nuclear has established a TSC and an on-site OSC, which are activated upon declaration of an Alert or higher classification. Until they become operational, required functions of these facilities are performed in the Control Room.

Under certain adverse conditions described in NRC Bulletin 2005-02, “Emergency Preparedness and Response Actions for Security-Based Events,” personnel may be assembled in an “ERO Offsite Staging Area” prior to being dispatched to one of the facility ERFs.

a. Station Control Room: The Control Room is the centralized onsite location from which the Nuclear Station's reactors and major plant systems are operated. The Control Room is equipped with instrumentation to supply detailed information on the reactors and major plant systems. The Control Room is continuously staffed with qualified licensed operators. The Control Room is the first onsite facility to become involved with the response to emergency events. Control Room personnel must evaluate and effect control over the emergency and initiate activities necessary for coping with the emergency until such time that support centers can be activated. These activities shall include:

- Reactor and plant control.
- Initial direction of all plant related operations.
- Accident recognition, classification, mitigation and initial corrective actions.
- Alerting of onsite personnel.
- Notification of appropriate individuals and activation of ERDS.
- Activation of emergency response facilities and ERO notification.
- Notification of offsite agencies.

- Continuous evaluation of the magnitude and potential consequences of an incident.
- Initial dose projections.
- Recommendations for immediate protective actions for the public.

As other ERFs become activated, they will supply support to the Control Room, although overall Command and Control of the emergency will transfer to the SED (TSC) or the CED (EOF). Throughout all emergencies, the Control Room maintains its emergency activation status until its normal operational status may be resumed.

b. Technical Support Center (TSC): Each nuclear generating station has established a TSC for use during emergency situations by station management, technical, and engineering support personnel. The TSC is activated for all emergencies classified as Alert or higher. Activation for other events is optional. When activated the TSC functions include:

- Support for the Control Room's emergency response efforts.
- Support the SED with assigned Command & Control functions.
- Continued evaluation of event classification.
- Assessment of the plant status and potential offsite impact.
- Coordination of emergency response actions.
- Notification of appropriate corporate and station management.
- Notification and update of the NRC via Emergency Notification System (ENS) including activation of Emergency Response Data System (ERDS).

The TSC is the onsite location utilized to support the Control Room for assessment of plant status and potential offsite impact, and for implementation of emergency actions. TSC provides technical data and information to the EOF.

Figure B-1b illustrates the staffing and organization of the TSC.

Each TSC provides reliable voice communications to the Control Room, the OSC, the EOF, the NRC, and state and local Emergency Operations Centers. In addition, they provide facsimile transmissions capability (see Section F.1).

Each TSC is sized to accommodate a minimum of 25 spaces and supporting equipment. This includes provisions for five NRC representatives. Adequate space is also available for the appropriate state representative(s).

Personnel in the TSC shall be protected from radiological hazards, including direct radiation and airborne contaminants under accident conditions with similar radiological habitability as Control Room personnel. To ensure adequate radiological protection, permanent radiation monitoring systems have been installed in the TSC and/or periodic radiation surveys are conducted. These systems indicate radiation dose rates and airborne radioactivity inside the TSC while in use. In addition, protective breathing apparatus (full-face air purifying respirators) and KI are available for use as required.

The TSC has access to a complete set of as-built drawings and other records, including general arrangement diagrams, P&IDs, and the electrical schematics. The TSC has the capability to record and display vital plant data, in real time, to be used by knowledgeable individuals responsible for engineering and management support of reactor operations, and for implementation of emergency procedures.

c. Operations Support Center (OSC): Each nuclear generating station has established an OSC. The OSC is the onsite location to where station support personnel report during an emergency and from which they will be dispatched for assignments or duties in support of emergency operations. The OSC shall be activated whenever the TSC is activated, but need not remain activated at the Alert level if its use is judged unnecessary by the Station Emergency Director. At the Site Area and General Emergency levels, the OSC or an alternate OSC shall be activated at all times. Activation for other events is optional. Station disciplines reporting to the OSC include, but are not limited to:

- Operating personnel not assigned to the Control Room.
- Radiation Protection Personnel.
- Chemistry Personnel.
- Maintenance Personnel (mechanical, electrical and I&C).

Figure B-1b illustrates the staffing and organization for the OSC.

Each OSC is equipped with communication links to the Control Room, the TSC and the EOF (see Section F). A limited inventory of supplies will be kept for the OSC. This inventory will include respirators, protective clothing, flashlights and portable survey instruments.

**2. Emergency Operations Facility (EOF)**

The EOF is the location where the Corporate Emergency Director will direct a staff in evaluating and coordinating the overall company activities involved with an emergency. Activation of the EOF is mandatory upon declaration of an Alert or higher classification. The EOF provides for:

- Management of overall emergency response.

- Coordination of radiological and environmental assessments.
- Determination of recommended public protective actions.
- Management of recovery operations.
- Coordination of emergency response activities with federal, state, and local agencies.

The common MW Region EOF is located west of Chicago, in Warrenville IL, in the Exelon Nuclear Cantera facility. This facility supports the Braidwood, Byron, Clinton, Dresden, LaSalle and Quad Cities stations.

The common MA Region EOF is located west of Philadelphia, in Coatesville PA. This facility supports Limerick, Peach Bottom and TMI Stations.

The EOF for Oyster Creek Station is co-located with the JIC at 1268 Rt. 37 West, Toms River, NJ.

The EOF for Victoria County Station is co-located with the JIC at 205 North Bridge Street, Victoria, TX.

These facilities are designed with the following considerations:

- The location provides optimum functional and availability characteristics for carrying out overall strategic direction of Exelon Nuclear onsite and support operations, determination of public protective actions to be recommended to offsite officials, and coordination with Federal, state and local organizations.
- It is well engineered for the design life of the plant and is of sufficient size to accommodate about 50 people.
- It is equipped with reliable voice communications capabilities to the TSC, the OSC, the Control Room, NRC, and state and local emergency operations centers. In addition, the EOF has facsimile transmission capability.
- Equipment is provided to gather, store, and display data needed in the EOF to analyze and exchange information on plant conditions with the Station. The EOF technical data system receives, stores, processes, and displays information sufficient to perform assessments of the actual and potential onsite and offsite environmental consequences of an emergency condition.
- The EOF has ready access to plant records, procedures, and emergency plans needed for effective overall management of Exelon Nuclear emergency response resources.

### 3. Emergency Operations Centers

EOCs operated by the state and local communities have been established to perform direction and control of emergency response functions.

The respective state EOCs are capable of continuous (24-hour) operations for a protracted period. These centers contain sufficient communications (radio, telephone and teletype) equipment, maps, emergency plans, and status boards to provide the necessary interfaces with other federal, state, county, and Exelon emergency facilities.

The county EOCs serve as Command and Control headquarters for local emergency response activities as well as a center for the coordination of communications to field units and to the state EOCs. These EOCs have the equipment necessary, (such as facsimile machines, telecommunications equipment, radio gear, photocopiers, wall maps, etc.) to carry out their emergency responsibilities.

### 4. Activation

NOTE: NUREG-0654 Criterion II.B.5 states that the "licensee must be able to augment on-shift capabilities within a short period after declaration of an emergency." It further defines that short period as 30 and 60 minutes. The time frames for rapid augmentation of a nuclear power plant staff in the event of an emergency are not rigid inviolate requirements but rather goals. It is Exelon Nuclear's intent to expend its best efforts to meet the augmentation criteria goals regarding staffing Emergency Response Facilities with sufficiently skilled individuals capable of handling an emergency. Both the NRC and Exelon Nuclear realize that due to diversity of normal residential patterns for the stations' staff, possible adverse weather conditions, road congestion and site access restrictions, these time frames might be exceeded.

Exelon Nuclear has put into place plans and procedures to ensure timely activation of its emergency response facilities. The Shift Manager (as Shift Emergency Director) will initiate a call-out in accordance with the implementing procedures. The ERO augmentation process identifies individuals who are capable of fulfilling the specific response functions that are listed in Table B-1. This table was developed based on the functions listed in NUREG-0654, Table B-1.

Although the response time will vary due to factors such as weather and traffic conditions, a goal of 60 minutes for minimum staffing, following the declaration of an Alert or higher emergency classification, has been established for the ERO personnel responding to the station emergency facilities and the EOF. Additionally, plans have been developed to ensure timely functional activation and staffing of the JIC when the classification of Alert is declared.

It is the goal of the organization to be capable of activating the applicable Emergency Response Facility within 15 minutes of achieving minimum staffing. The facility can be declared activated when the following conditions are met:

a. Minimum staffing has been achieved.

b. Personnel have been briefed on the situation.

c. The facility is functionally capable of performing the appropriate activity.

Although the minimum staffing criteria applies to the JIC, the 60 minute response time and minimum staffing plus 15 minute activation time are not applicable. Public Information personnel must first coordinate the decision to activate the JIC with the appropriate offsite authorities.

The Director in charge may elect to activate their facility without meeting minimum staffing, if it has been determined that sufficient personnel are available to fully respond to the specific event (this would not constitute a successful minimum staff response).

**5. Monitoring Equipment Onsite**

Each nuclear station is equipped with instrumentation for seismic monitoring (with the exception of Oyster Creek), radiation monitoring, fire protection and meteorological monitoring. Instrumentation for the detection or analysis of emergency conditions is maintained in accordance with station Technical Specifications, if applicable, or commitments made to the NRC. The actual instrumentation varies somewhat from site to site and thus will not be described in detail in this plan. Descriptions of the equipment will appear in each Station Annex. This equipment includes but is not limited to the following:

a. Geophysical Monitors

1) Meteorological Instrumentation: A permanent meteorological monitoring station is located near each station for display and recording of wind speed, wind direction, and ambient and differential temperature for use in making offsite dose projections. Meteorological information is presented in the CR, TSC, and EOF by means of the plant computer system. This information is remotely interrogated using a computer or other data access terminal.

With regard to Exelon Nuclear's meteorological monitoring program, there has been a quality assurance program adopted from 10 CFR 50, Appendix B. However, since the meteorological facilities are not composed of structures, systems, and components that prevent or mitigate the consequences of postulated accidents and are not "safety related," not all aspects of 10 CFR 50, Appendix B, apply. Those aspects of quality assurance germane to supplying good meteorological information for a nuclear power station were adopted into the meteorological quality assurance program. The meteorological program is also subject to the requirements of the QATR, Section 19, Augmented Quality.

The National Weather Service (NWS), or regional weather forecast providers, may be contacted during severe weather periods. These providers analyze national and local weather in order to provide localized weather forecasts for the system or for the station area as appropriate.

2) Seismic Monitoring: The seismic monitoring system measures and records the acceleration (earthquake ground motion) of the structure. Earthquakes produce low frequency accelerations which, when detected by the remote sensing devices, are permanently recorded as information which defines the response spectrum. The system remains in a standby condition until an earthquake causes the remote unit(s) to activate the recording circuits and tape transports. It also provides signals for immediate remote indication that specific preset response accelerations have been exceeded.

3) Hydrological Monitors: The design basis flood, probable maximum precipitation, and other improbable, conceivable extremes in hydrologic natural phenomena are well below any design limits for the stations as detailed in the UFSAR.

b. Radiological Monitors and Sampling

1) The Radiation Monitoring System (RMS): In-plant radiological measurements provide information that may help determine the nature, extent and source of emergency conditions. The RMS is available to give early warning of a possible emergency and provides for a continuing evaluation of the situation in the Control Room. Radiation monitoring instruments are located at selected areas within the facility to detect, measure, and record radiation levels. In the event the radiation level should increase above a preset level, an alarm is initiated in the Control Room. Certain radiation monitoring instruments also alarm locally in selected areas of the facility. The RMS is divided into three subsystems:

a) Area Radiation Monitors (ARMs) are used for the direct measurement of in-plant exposure rates. The ARM readings allow in-plant exposure rate determinations to be made remotely without requiring local hand-held meter surveys. This information may be used, initially, to aid in the determination of plant area accessibility. In addition to permanent monitors, portable Continuous Air Monitors (CAMs) measure airborne particulate and airborne iodine activities at various locations within the operating areas.

b) Process Radiation Monitors (PRMs) are used for the measurement of radioactive noble gas, iodine, and particulate concentrations in plant effluent and other gaseous and fluid streams.

c) The accident, or high range, radiation monitoring system monitors radiation levels at various locations within the operating area. These are high range instruments used to track radiation levels under accident or post accident conditions. These instruments include the Containment/Drywell Radiation Monitors.

The RMS provides the necessary activity or radiation levels required for determining source terms in dose projection procedures. Key RMS data is linked to the plant computer, which allows information to be passed to the TSC and EOF. The isotopic mix, including isotopes such as those in Table 3 of NUREG-0654, is based upon a default accident mix. Refer to the station specific UFSAR for further detail on the RMS capabilities and design.

2) Liquid and Gaseous Sampling Systems: The process sampling system consists of the normal sampling system and additional sampling panels located throughout the plant. Sampling systems are installed or can be modified to permit reactor coolant and containment atmosphere sampling even under severe accident conditions.

   The sampling systems use a number of manual sampling techniques to enable reactor coolant and containment sampling operations over a wide range of plant conditions. It is capable of providing information relative to post-accident plant conditions to allow operator actions to be taken to mitigate and control the course of an accident. Refer to the specific UFSAR for further detail on sampling capabilities.

3) Portable Radiation Monitoring Equipment: Portable radiation survey instruments are available for a wide variety uses such as area, sample, and personnel surveys and continued accident assessment. Instruments are stored throughout the plant and in the emergency facilities.

c. Process Monitors: The Control Room and applicable redundant backup locations are equipped with extensive plant process monitors for use in both normal and emergency conditions. These indications include but are not limited to reactor coolant system pressure and temperature, containment pressure and temperature, liquid levels, flow rates, status or lineup of equipment components. This instrumentation provides the basis for initiation of corrective actions.

   1) Plant Monitoring/Information System: A plant monitoring/information system provides the data acquisition and database capability for performing plant monitoring and functions. The system is designed to scan, convert to engineering units, make reasonability and alarm limit checks, apply required transformations, store for recall and analysis, and display the reading of transformed data from plant instrumentation. The system scans flows, pressures, temperatures, fluid levels, radiation levels, equipment, and valve status at required frequencies. Scanned variables are quality tagged. The system provides for short and mid term storage of data for on-line retrieval and fast recall, and long term storage to appropriate media.

2) Safety Parameter Display (SPDS) & Plant Parameter Display (PPDS) Systems: SPDS and PPDS provide a display of plant parameters from which the safety status of operation may be assessed in the Control Room, TSC and EOF for each nuclear station. The primary function of the SPDS and PPDS is to help operating personnel in the Control Room make quick assessments of plant safety status. SPDS and/or PPDS displays in the TSC and EOF promote the exchange of information between these facilities and the Control Room and assists the emergency organization in the decision making process.

d. Fire Detection System: The Fire Detection System is designed to quickly detect visible or invisible smoke (or other products of combustion) and/or heat in designated areas of the plant. The fire alarm communication systems and subsystems are located at strategic points throughout the plant to warn personnel of a nuclear incident or other emergency conditions. Existing plant alarm systems are sufficiently audible to alert personnel in the event of a fire or need for assembly. These alarm communication systems consist of warning sirens and lights (in high noise areas) and the PA system. Refer to the respective station UFSAR for further description of the station's fire protection system.

**6. Monitoring Equipment Offsite**

Exelon has made provisions to acquire data from and have access to the following offsite sources of monitoring and analysis equipment:

a. Geophysical Monitors: In the event that the onsite meteorological tower or monitoring instrumentation becomes inoperative and the contracted weather provider cannot be contacted, meteorological data may be obtained directly from the National Weather Service or the internet.

A considerable array of seismometers are located in the region. A central point of contact to obtain information about a seismic event is the National Earthquake Information Service in Golden, Colorado.

Exelon Nuclear Corporate Offices can coordinate hydrology and seismology expertise in the event onsite information becomes unavailable.

b. Radiological Environmental Monitors and Sampling: Exelon Nuclear has contracted with a company to conduct an extensive offsite environmental monitoring program to provide data on measurable levels of radiation and radioactive materials in the environs. The program (described fully in the Offsite Dose Calculation Manual), includes:

- Fixed continuous air samplers.
- Routine sampling of river water; milk and fish.
- A fixed TLD monitoring network.

The TLD program consists of the following elements at each nuclear station:

- A near-site ring of dosimeters covering the 16 meteorological sectors.
- A 16-sector ring of dosimeters placed in a zone within about 5 miles from the plant.
- TLDs placed at each of the normal fixed air sampler locations (typically about 8-15 air samplers per nuclear station).

c. Laboratory Facilities: External facilities for counting and analyzing samples can be provided by the other Exelon Nuclear stations, state, federal or contracted laboratories. These laboratories can act as backup facilities in the event that the affected station's counting room and laboratory become unusable or the offsite radiological monitoring and environmental sampling operation exceeds the capacity or capability of the station laboratory during an emergency. It is estimated that these laboratories will be able to respond within several hours from initial notification.

Outside analytical assistance may be requested from state and federal agencies, or through contracted vendors. The state maintains a mobile radiological laboratory that provides the primary means of analyzing off-site environmental samples. The NRC mobile laboratory may be made available for Site Area and General Emergencies. The DOE, through the Radiological Assistance Program (RAP) has access to any national laboratory with a Bell Lab contract (e.g., Brookhaven, Oak Ridge, Lawrence Livermore, etc.).

A general description of the laboratory capabilities is provided in Section C.3.

**7. Offsite Monitoring Equipment Storage**

Each nuclear station maintains a sufficient supply of emergency equipment (such as portable survey, counting, and air sampling instrumentation and other radiological monitoring equipment and supplies) that may be used for environmental monitoring. These supplies meet the initial requirements of two environmental Field Monitoring Teams. During subsequent phases of an emergency, additional equipment is available from other Exelon Nuclear generating stations, vendors and offsite response organizations.

**8. Meteorological Monitoring**

The station has installed and maintains a meteorological tower equipped with instrumentation for continuous reading of the wind speed, wind direction, air temperature and delta air temperature. Additional capabilities are available to obtain representative current meteorological information from other sources, such as the National Weather Service. A full description of the onsite meteorological capabilities is given in Section H.5.a of this Plan.

**9. OSC Capabilities**

The OSC provides area for coordinating and planning of OSC activities and the staging of personnel. Further space is available in adjacent offices and locker rooms to accommodate additional personnel as may be required. Alternate locations are available. The onsite storeroom of each nuclear station maintains a supply of parts and equipment for normal plant maintenance. These parts, supplies and equipment are available for damage control use as necessary.

Sufficient radiation protection equipment (i.e., protective clothing, respiratory protection gear, KI, and other health physics equipment and supplies) is stored and maintained near the OSC (as well as the other emergency response facilities). Damage Control Team equipment is available near the OSC as well as in the maintenance shops. This equipment includes items such as a camera, portable lighting, and additional portable communications equipment. The OSC is stocked with an assortment of first aid and medical treatment equipment and supplies. The OSC maintains reliable voice communications with the CR, TSC, and EOF. For a complete description of communications equipment, refer to Section F. When an emergency condition exists at one station, additional supplies can be obtained from other unaffected stations and Exelon resources upon request.

**10. Facility and Equipment Readiness**

Emergency facilities and equipment are inspected and inventoried in accordance with emergency preparedness procedures. These procedures provide information on location and availability of emergency equipment and supplies. An inventory of all emergency equipment and supplies is performed on a quarterly basis and after each use in an emergency or drill. During this inventory, radiation monitoring equipment is checked to verify that required calibration period and location are in accordance with the inventory lists. Inspections include an operational check of instruments and equipment. Equipment, supplies, and parts which have a shelf-life are identified, checked, and replaced as necessary. Sufficient reserves of instruments and equipment are maintained to replace those which are removed from emergency kits or lockers for calibration or repair. The stations are responsible for maintaining a supply of KI at their respective site.

**11. General Use Emergency Equipment**

Inventory procedures identify the equipment that make up kits used in an emergency situation available within each emergency facility.

**12. Collection Point for Field Samples**

The onsite chemistry lab, unless otherwise specified in the respective Station Annex, has been designated as the central point for the receipt of radiological field monitoring samples. Sampling and analysis equipment is available for quantitative activity determination of marine and air samples, and qualitative activity determination of terrestrial samples. Sufficient field monitoring equipment is maintained at the stations for initial sampling. Instrumentation and equipment utilized for sample activity determination are routinely calibrated to ensure timely availability. Additional facilities as described in C.3 and H.6.c are available for sample and analysis of environmental samples.

Refer to Station Annexes for further description of contracted environmental sampling and analysis support for a particular site.

## Section I: Accident Assessment

To effectively coordinate and direct all facets of the response to an emergency situation, diligent accident assessment efforts are required throughout the emergency. All four emergency classifications have similar assessment methods, however, each classification requires a greater magnitude of assessment effort dependent upon the plant symptoms and/or initiating event(s).

### 1. Plant Parameters and Corresponding Emergency Classification

Plant system and effluent parameter values are utilized in the determination of accident severity and subsequent emergency classification. Environmental and meteorological events are also determining factors in emergency classification. An emergency condition can be the result of just one parameter or condition change, or the combination of several. The specific symptoms, parameter values or events for each level of emergency classification are detailed in the emergency implementing procedures. Specific plant system and effluent parameters that characterize a classifiable event (EALs) are presented in each Station Annex.

In order to adequately assess the emergency condition, each emergency facility has the necessary equipment and instrumentation installed to make available essential plant information on a continuous basis. Evaluation of plant conditions is accomplished through the monitoring of plant parameters both from indication in the Control Room and within the plant. Some of the more important plant parameters to be monitored in the Control Room are assembled into a single display location, which is entitled the "Safety Parameter Display System" (SPDS). The SPDS monitors such parameters as: reactor coolant system pressure, reactor or pressurizer water level, containment pressure, suppression pool water level and temperature, reactor power, safety system status, containment radiation level and effluent monitor readings. The instrumentation and equipment capabilities available for each emergency facility are described in Section H.

### 2. Onsite Accident Assessment Capabilities

The resources available to provide initial and continuing information for accident assessment throughout the course of an event include plant parameter display systems, liquid and gaseous sampling system, Area and Process Radiation Monitoring Systems, and Accident Radiation Monitoring Systems (which includes the high range containment radiation monitors). Descriptions of these systems are given in Section H.5.b.

### 3. Source Term Determination

Source term (or core damage) estimations serve several roles within the Exelon Emergency Preparedness Program. For planning purposes, core damage considerations are used as the bases for several of the Emergency Action Level (EAL) Initiating Conditions and as the threshold for the declaration of a General Emergency (the definition of a General Emergency specifies conditions which involve ‘substantial’ core degradation or melting as one of the bases for classification).

From an implementation perspective, core damage estimations provide a means of realistically differentiating between the four core states (no damage, clad failure, and fuel melt, and vessel melt-through) to:

- Evaluate the status of the fuel barriers and how their status relates to the risks and possible consequences of the accident.
- Provide input on core configuration (coolable or uncoolable) for prioritization of mitigating activities.
- Determine the potential quality (type) and/or quantity (%) of source term available for release in support of projected offsite doses and protective action recommendations.
- Provide information that quantifies the severity of an accident in terms that can be readily understood and visualized.
- Support the determination of radiological protective actions that should be considered for long term recovery activities.

The assessment methodologies utilized by Exelon are intended to provide a rapid best estimate of core damage which, when evaluated together, help to develop an overall picture of the extent of core damage. The methods used to estimate the amount or type of core damage occurring under accident conditions include the following:

- Containment Radiation Monitors: An indirect method used to determine the amount of core damage. Applicable to Loss of Coolant Accident (LOCA) scenarios. Based upon an end-of-life source term and static nuclide ratio assumptions yielding a limited accuracy. Valid any time following an accident.
- Core Temperatures: Methods such as Core Exit Thermocouple (CET), Peak Core Temperatures and Hot Leg Temperatures provide indirect methods used to indicate the type and/or amount of core damage. Applicable for all types of accidents. Valid any time following an accident.
- Core Uncovery: Methods such as Core Uncovery Time, RVLIS Level and Source Range Monitor count rate provide indirect methods used to indicate the type of core damage (clad failure or fuel melt). Applicable for all types of accidents. Provides a relatively accurate estimate of the state of the core early in the event. Valid any time following an accident.
- Containment Hydrogen Concentration: An indirect method used to establish the type of core damage. Applicable to LOCA type accidents where all the hydrogen generated by the metal-water reaction is released into containment. Valid any time following an accident.
- Sample Analysis - Isotopic Ratio Comparison: A direct method used to establish the type of core damage. Compares expected isotopic ratios with a sample to determine a general core state. Applicable under all types of accidents. Valid any time following an accident.

- Sample Analysis - Presence of Abnormal Isotopes: A direct method used to provide a go/no go indication of fuel melt by the presence of unusually high concentrations of the less volatile fission products. Applicable under all types of accidents. Valid any time following an accident.
- Sample Analysis - Concentration Evaluation: A direct method that yields the most accurate numerical estimations of the amount of core damage. Applicable for all types of accidents. Requires the sampled system(s) be in a steady state that usually prevents its use until the plant is in a stable condition.

**4. Effluent Monitor Data and Dose Projection**

Dose assessment or projection represents the calculation of an accumulated dose at some time in the future if current or projected conditions continue. During an accident, the Plant Parameter Display System and personal computers will provide the ERO with the timely information required to make decisions. Radiological and meteorological instrumentation readings are used to project dose rates at predetermined distances from the station, and to determine the integrated dose received. Dose assessment methods used by Exelon personnel to project offsite doses include:

A. Monitored Release Points - This method utilizes the plant's effluent radiation monitors and system flow rates. Effluent release points are used to directly calculate a release rate. The point of the release determines the way the source term is affected and is adjusted by the dose assessment process.

B. Containment Leakage/Failure - This method uses a variety of containment failures or leak rates in conjunction with available source term estimations to develop a release rate to the environment. A direct vent of containment can be modeled as a failure to isolate.

C. Release Point Samples - This method uses a sample at the release point and an estimated flow rate to develop a release rate at the point of release.

D. Field Monitoring Team Data - This method uses a field survey or sample and the atmospheric model to back calculate a release rate and ratio concentrations of radioactive material at various points up and downwind of plume centerline.

The computer applications used to provide dose calculations are evaluated against the EPA-400 plume exposure Protective Action Guides (PAGs) applicable for the early phase of an accident. These evaluations place an emphasis on determining the necessity for offsite protective action recommendations. Dose assessment actions will be performed in the following sequence:

First: Onset of a release to 1 hour post-accident: Shift personnel will rely on a simplified computerized dose model to assist them in developing offsite dose projections using real time data from effluent monitors and site meteorology.

Second: One hour post-accident to event termination: Estimates of off-site doses based on more sophisticated techniques are provided. Dedicated ERO personnel will analyze the offsite consequences of a release using more complex computerized dose modeling. These additional methods are able to analyze more offsite conditions than the simplified quick method, as well account for more specific source term considerations.

**5. Meteorological Information**

Local meteorological data is available from an onsite meteorological tower. The data available includes wind speed, wind direction, temperature, and delta temperature. These data are used by the utility, state, and NRC to provide near real-time predictions of the atmospheric effluent transport and diffusion. Meteorological data from the tower is available in the CR, TSC, and EOF. A full description of the onsite meteorological capabilities is given in Section H.5.a.

**6. Unmonitored Release**

Dose projections can be made during a release through use of actual sample data in situations where effluent monitors are either off-scale or inoperative or the release occurs by an unmonitored flow path. In the absence of effluent sample data, a dose projection can be performed simply by specifying the accident category as a default. The selection of a default accident category defines the mix, the total curies, and the release pathway(s). The total number of curies from a default mix for each isotope is used to provide an upper bound for release concentration, and hence, an upper bound for the dose rate and dose to the public.

**7. Field Monitoring**

In addition to the capabilities and resources described in Section H.6.b and H.7, Exelon Nuclear maintains the ability to take offsite air samples and to directly measure gamma dose rates the event of an airborne or liquid release. The capability to take offsite soil, water, and vegetation samples is also provided by either the Field Teams or a contracted vendor.

The environmental monitoring equipment, as described in Section H, contain portable survey, counting, and air sampling instrumentation and other radiological monitoring equipment and supplies to be used by the Field Monitoring Teams. Samples are taken at predetermined locations as well as those specified both during and after a release. Environmental measurements are used as an aid in the determination and assessment of protective and recovery actions for the general public.

**8. Field Monitoring Teams**

Field Monitoring Teams are dispatched by Exelon Nuclear to perform a variety of functions during conditions that may involve significant releases of radioactive materials from the plant. Radiological survey and sample data is used to define affected area boundaries, verify or modify dose projections and protective action recommendations, and assess the actual magnitude, extent, and significance of a liquid or gaseous release.

In addition to contamination and dose rate measurements, the change out of TLDs and air sampler cartridges can be performed. Other actions may include soil, water and vegetation sampling.

The initial environmental surveys involve simple-to-perform measurements to quickly confirm or modify the dose projections based on plant parameters. Subsequent environmental monitoring efforts will be aimed at further defining the offsite consequences including instituting an expanded program to enable prompt assessments of any subsequent releases from the plant.

The expertise necessary to conduct limited offsite environmental survey and sampling exists onsite 24 hours a day. A minimum of two offsite Field Monitoring Teams are notified and activated at an Alert or higher classification. Teams are composed of two individuals are assembled at the station to test and inventory dedicated survey and sampling equipment. Teams are then dispatched in company or personal vehicles into the surrounding area when a release is or is expected to occur. Radiological survey and sample data is transmitted to the emergency facilities. Vendor/contractor support can be used to perform collection, shipment and analysis of environmental sample media as described in Section B.8.c.

**9. Iodine Monitoring**

Field monitoring equipment has the capability to detect and measure airborne radioiodine concentrations as low as $1 \times 10^{-7}$ μCi/cm$^3$ in the presence of noble gases. Interference from the presence of noble gas and background radiation will be minimized by ensuring that monitoring teams move to areas of low background prior to analyzing the sample cartridge. The collected air sample is measured by hand held survey meter as an initial check of the projection derived from plant data to determine if significant quantities of elemental iodine have actually been released (the chemical form that would pose a health hazard).

**10. Dose Estimates**

Specific procedures exist for the correlation of air activity levels to dose rate for key isotopes. Provisions have been established for estimating integrated dose from the projected and actual dose rates and for the comparison of these estimates with the protective action guides.

**11. State Monitoring Capabilities**

The states have the ability to dispatch their own field monitoring teams to track the airborne radioactive plume. The states also have the ability and resources to coordinate with federal and utility monitoring teams to compare sample results.

## Section J: Protective Response

Protective response consists of emergency actions, taken during or after an emergency situation, which are intended to minimize or eliminate hazards to the health and safety of the public and/or station personnel. A range of protective actions has been developed for emergency workers and the general public in the Plume Exposure Pathway EPZ. Additionally, guidelines have been established to aid in choosing protective actions during an emergency that are consistent with federal guidance. Exelon Nuclear is responsible for onsite actions, while the responsibility for offsite actions rests with the state, county, and other offsite response agencies.

### 1. Notification of Onsite Personnel

For all emergency classifications, all personnel within the Protected Area are notified within 15 minutes of the initial classification or escalation of an emergency by recognizable alarms and/or verbal announcements over the plant Public Address (PA) System. Announcements include the emergency classification and response actions to be taken by personnel onsite (such as ERO, non-ERO, contractor personnel, and visitors). Provisions are made to alert personnel in high noise areas and outbuildings within the Protected Area as applicable.

Each station has identified locations where people might be expected to be present outside the Protected Area but within the Owner Controlled Area. Accountability of persons within the Owner Controlled Area but outside the Protected Area is not required. However, provisions are established for notification of personnel within the Owner Controlled Area any time a Site Evacuation has been initiated, or as otherwise deemed appropriate.

### 2. Evacuation Locations

If a Site Evacuation is required, nonessential personnel are directed to either assemble within designated Assembly Areas or to immediately evacuate the site. Personnel will be directed to either proceed to their homes or to reassemble at designated offsite locations. Visitors to the station will assemble with and follow the instructions of their escorts. Nonessential personnel within the Protected Area will normally exit through the security building. Personal transportation (if available) will normally be used and established evacuation routes will be followed. Personnel without transportation will be identified and provided transportation as necessary.

### 3. Radiological Monitoring of Evacuees

Personnel evacuating the site will be monitored for contamination by the portal monitors as they exit the Protected Area, with portable friskers in Assembly Areas, or sent to offsite monitoring locations on an as needed basis.

**4. Evacuation**

Evacuation is the primary protective action anticipated for onsite personnel not having immediate emergency response assignments. Each nuclear station has identified locations that serve as Assembly Areas and offsite locations for non-essential personnel when they are not instructed to proceed home. The specific locations of these areas are shown in each Station Annex. Implementing procedures describe equipment, supplies and general operation of these facilities. The Station Emergency Director will designate personnel within the Site Boundary as essential or nonessential. Evacuation of non-essential personnel is usually conducted immediately after accountability if a Site Area Emergency or General Emergency has been declared and conditions permit. Evacuation shall commence in accordance with station procedures as directed by the Station Emergency Director or his/her designee, unless one of the following conditions exist:

a. Severe weather conditions threaten safe transport.

b. A significant radiological hazard would be encountered.

c. There is a security threat occurring, which would have an adverse impact on the personnel while leaving the site.

d. A condition similar to the above in magnitude, which in the opinion of the Station Emergency Director would adversely affect the site personnel.

Security forces will be dispatched, when available, to access road(s) to control entry to site facilities. Unauthorized and non-ERO personnel will be denied entry.

The initiation of a site evacuation will be reported to the appropriate state/local agency.

Per NRC Bulletin 2005-02 “Emergency Preparedness and Response Actions for Security-Based Events,” Exelon has established the implementation of alternate onsite protective actions for security-based events that are more appropriate than the actions for radiological emergencies. These alternate protective actions could include taking immediate cover, immediate protected area evacuation, immediate owner controlled area evacuation, and dispatch of the ERO to their alternate reporting center.

**5. Accountability**

The purpose of Accountability is to determine the locations of all personnel inside the Protected Area and to muster emergency personnel at prearranged locations. When Accountability of onsite personnel is determined to be necessary by the Station Emergency Director, all personnel within the protected area shall be accounted for and the names of missing individuals (if any) are determined within thirty (30) minutes of the announcement.

Accountability is usually performed in conjunction with Assembly, and is required to be initiated whenever a Site Area Emergency or higher classification is declared. The movement of personnel for the purposes of Accountability may be delayed if their health and safety could be in jeopardy, such as severe weather or for security concerns.

If it is determined that the prearranged Assembly Area is unfit for personnel, the Station Emergency Director may designate an alternative Assembly Area and direct personnel using appropriate communication systems that are available.

Once established, Accountability within the Protected Area is maintained throughout the course of the event. Should missing personnel be identified, search and rescue operations are initiated.

**6. Provisions for Onsite Personnel**

Exelon maintains an inventory of respiratory protection equipment, anti-contamination clothing, and KI that is made available to emergency workers remaining onsite should conditions warrant. During the course of an emergency, protective actions are considered to minimize radiological exposures or contamination problems associated with all onsite personnel. For those who must work within the restricted area of the affected site, measures that are considered are:

a. Use of Respirators: On-shift and emergency response personnel use respiratory protection in any environment involving exposure to high level gaseous activity or oxygen deficient atmosphere, or where air quality is in doubt. In the presence of airborne particulates, emergency response personnel may be directed by health physics personnel to use full-face filter type respirators. The criteria for issuance of respiratory protection are described in Radiation Protection procedures.

b. Use of Protective Clothing: Anti-contamination clothing, located in the TSC, OSC and station dress out areas is available for use by onsite personnel. The criteria for issuance of protective clothing are described in Radiation Protection procedures.

c. Use of Potassium Iodide (KI): The use of KI may be recommended when a projected dose of 50 Rem Committed Dose Equivalent (CDE) is exceeded for an emergency worker's thyroid. This is the value specified in EPA 400-R-92-001, “Manual of Protective Action Guides and Protective Actions for Nuclear Incidents.”. The stations are responsible for maintaining a supply of KI at their respective site. The Station Emergency Director has the responsibility for approval of issuing KI to Exelon Nuclear emergency workers.

**7. Mechanism for Implementing Protective Action Recommendations**

Plant conditions, projected dose and dose rates, and/or field monitoring data are evaluated to develop PARs for the purpose of preventing or minimizing exposure to the general public. PARs are provided to the offsite agencies responsible for implementing protective actions for the general public within the 10-mile EPZ. PARs are approved by the Emergency Director in Command and Control.

In an emergency that requires immediate protective actions be taken prior to activation of the offsite emergency facilities, PARs are provided directly to the state and county 24 hour warning points by the Emergency Director.

**8. Evacuation Time Estimates (ETEs)**

An independent ETE report has been performed to provide estimates of the time required to evacuate resident and transient populations surrounding each station for various times of the year under favorable and adverse conditions. ETEs for evacuation of the plume exposure EPZ surrounding each Exelon Nuclear station are summarized in each Station Annex and detailed in the referenced ETE report.

**9. Capability of Implementing Protective Action Recommendations**

The responsibility for implementing protective measures based on protective action guides for the offsite population at risk is the responsibility of the state and local governments. Detailed procedures for public protective actions are contained in the state and other local radiological emergency response plans as appropriate.

The state agencies are responsible for evaluation of Exelon Nuclear recommended protective actions and preparing a recommendation to the Governor, or his/her appointed agent. Only when the state acts under the Governor's order does a recommended protective action become a directed protective action.

If the plant conditions are stable and offsite radiological conditions are such that the public health and safety are not endangered, then return to evacuated areas may be discussed with the affected state(s). state authorities are responsible for actually recommending return and transmitting this recommendation.

**10. Implementation of Protective Action Recommendations**

The utility, state, and county emergency plans used to implement the protective measures for the plume exposure pathway take numerous factors into consideration. Among these considerations are:

a. Most of the public evacuees are expected to travel in their own vehicles, leaving the EPZ via designated evacuation routes. Station Annexes show the evacuation routes, EPZ Subareas and pre-selected sampling/monitoring points. The state and county plans contain official maps and information on the locations of off-site centers.

b. The population distribution around the station. Population distribution for the plume exposure EPZ is illustrated in the Station Annexes.

c. As indicated in Section E, offsite agencies are notified in the event the E-Plan is activated. State and county agencies have the capability to notify all members of the transient and resident population within the Plume Exposure Pathway EPZ.

d-l. Items addressed separately in state and county emergency plans.

m. At a General Emergency classification, Exelon Nuclear will provide the state with recommendations for protective actions for the public. For incidents involving actual, potential, or imminent releases of radioactive material to the atmosphere, EPA 400-R-92-001, the NRC Response Technical Manual (RTM-96) and NUREG-0654, Supp. 3 are used as the basis for the general public PARs.

1) Plant Based PARs

Figure J-1 has been developed to aid Exelon Nuclear personnel providing PARs based on the above. Station specific PAR Flowcharts with Subarea or Sector tables are documented in the Station Annexes, including station-specific requirements regarding PAR determination. These flowcharts and tables provide technically based Protective Action Recommendations based on plant conditions and core damage indicators. Possible plant based PARs issued by Exelon Nuclear at a General Emergency include:

- Shelter of the general public within a two mile radius and five miles downwind (puff release above PAGs).
- Evacuation of the general public within a two mile radius and five miles downwind.
- Evacuation of the general public within a five mile radius and ten miles downwind.

In addition to the above actions to minimize or prevent potential exposure to radiation, a recommendation of heightened awareness will be issued for the remainder of the EPZ consistent with the specific terminology in use by the applicable offsite organizations. For example, some entities use the term shelter to achieve heightened awareness, while others reserve shelter exclusively for dose reduction measures.

2) Dose Based PARs

Evacuation is recommended if projected doses reach the minimum EPA PAGs ($\geq$ 1 Rem EPA TEDE[1] or $\geq$ 5 Rem CDE Thyroid).

[1] EPA TEDE is defined as the sum of the doses from external exposure and inhalation from the plume, and from 4 days of external exposure to deposited materials.

Shelter is recommended at the Midwest Stations if projected doses reach the minimum EPA PAGs (≥ 1 Rem EPA TEDE or ≥ 5 Rem CDE Thyroid) **AND** a puff release is in progress. These requirements may differ at the Mid-Atlantic stations as stated in their respective Emergency Plan Annex.

Many assumptions exist in dose assessment calculations, involving both source term and meteorological factors, which make computer predictions over long distances highly questionable. However, in the event dose assessment results indicate the need to recommend actions beyond the outer EPZ boundaries, that is past 10 miles, Field Monitoring Teams are dispatched to downwind areas to verify the calculated exposure rates prior to issuing PARs outside the EPZ.

Exelon personnel normally do not have the necessary information to determine whether off site conditions would require sheltering instead of evacuation. An effort to base PARs on external factors (such as road conditions, traffic/traffic control, weather, or offsite emergency response capabilities) is usually performed by the state.

### 11. Ingestion Pathway Protective Measures

The responsibility for specifying protective measures to be used for the ingestion pathway rests with the state. These measures include the methods for protecting the public from consumption of contaminated water and foodstuffs.

### 12. Monitoring of Evacuees

The state and county organizations have the capability to register and monitor evacuees at designated reception centers. This capability includes personnel and equipment capable of monitoring residents and transients evacuating from the plume exposure EPZ and arriving at the reception centers, in accordance with FEMA guidelines.

**Figure J-1: Generic PAR Flowchart**

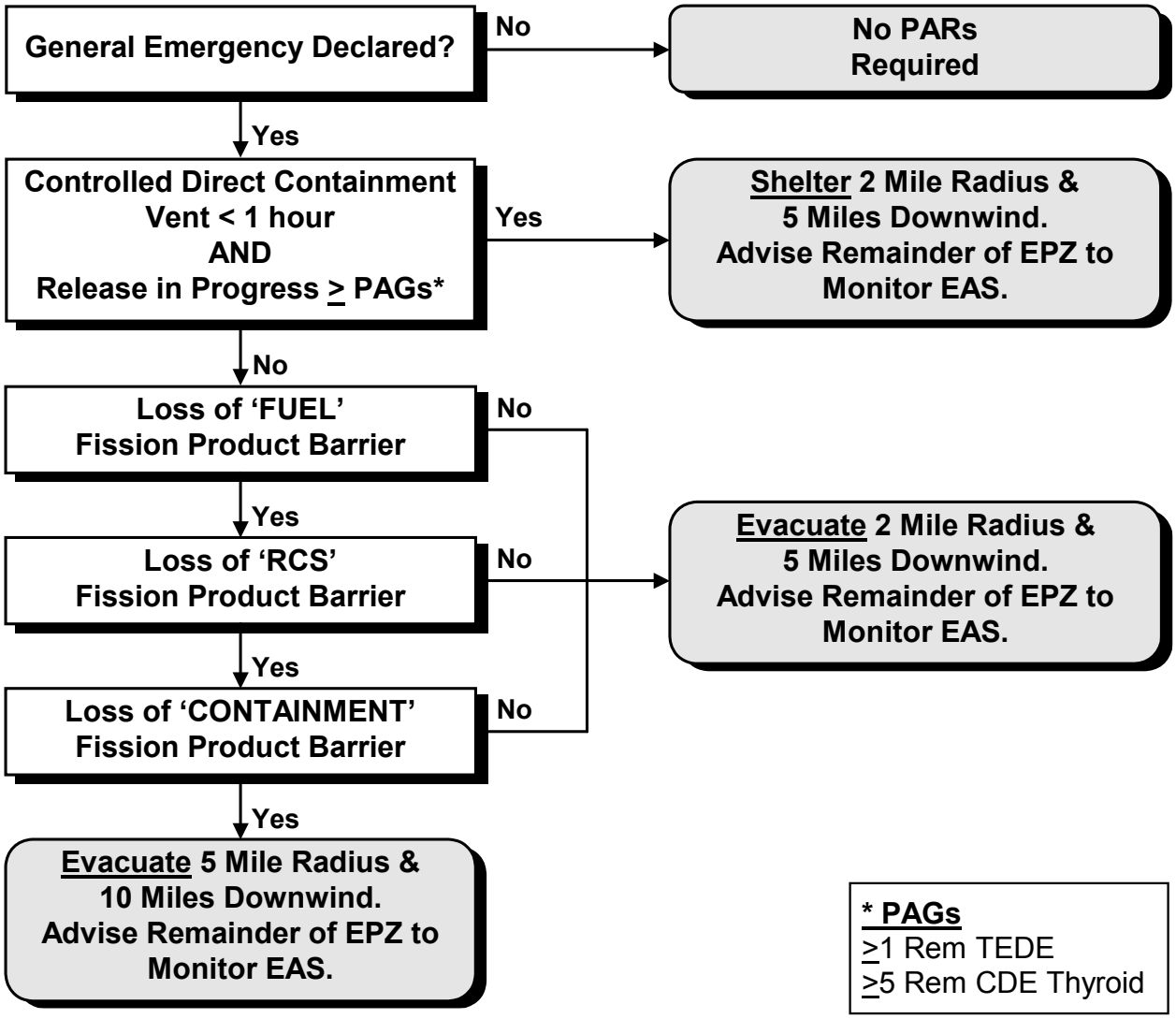


Note: LOSS of a fission product barrier as defined in the Emergency Action Level (EAL) Matrix.

## Section K: Radiological Exposure Control

This section of the plan describes the means for controlling emergency worker radiological exposures during an emergency, as well as the measures that are used by Exelon to provide necessary assistance to persons injured or exposed to radiation and/or radioactive materials. Exposure guidelines in this section are consistent with EPA Emergency Worker and Lifesaving Activity Protective Action Guides described in EPA 400-R-92-001.

### 1. Emergency Exposure Guidelines

Being licensed by the NRC, all Exelon Nuclear generating stations maintain personnel exposure control programs in accordance with 10 CFR 20 under normal operating conditions. The Station Emergency Director is assigned the non-delegable responsibility for authorizing personnel exposure levels under emergency conditions per EPA-400. In emergency situations, workers may receive exposure under a variety of circumstances in order to assure safety and protection of others and of valuable property. These exposures will be justified if the maximum risks or costs to others that are avoided by their actions outweigh the risks to which the workers are subjected. The Emergency Worker Dose Limits are as follows:

| Dose Limit (Rem TEDE) | Activity | Condition |
|---|---|---|
| 0-5 | All | Personnel should be kept within normal 10 CFR 20 limits during bona fide emergencies, except as authorized for activities as indicated below. |
| 5-10 | Protecting valuable property | Lower dose not practicable. |
| 10-25 | Lifesaving or protection of large populations | Lower dose not practicable. |
| > 25 | Lifesaving or protection of large populations | Only on a voluntary basis to persons fully aware of the risks involved. |

Limit dose to the lens of the eye to three times the above values and doses to any other organ (including skin and body extremities) to 10 times the above values.

Whenever possible, the concurrence of the Station's Radiation Protection (Department) Manager should be secured before exposing individuals to dose equivalents beyond the EPA-400 lower limit.

**2. Emergency Radiation Protection Program**

The TSC Radiation Protection Manager is the individual responsible for the implementation of the radiation protection actions during an emergency. Radiation protection guidelines include the following:

- Volunteers over 45 years of age are considered first for any emergency response action requiring exposure greater than normal limits. Routine dose limits shall not be extended to emergency dose limits for declared pregnant individuals. As in the case of normal occupational exposure, doses received under emergency conditions should be maintained as low as reasonably achievable.

- Persons undertaking any emergency operation in which the dose will exceed 25 Rem TEDE should do so only on a voluntary basis and with full awareness of the risks involved including the numerical levels of dose at which acute effects of radiation will be incurred and numerical estimates of the risk of delayed effects.

- In the context of the emergency limits, exposure of workers that is incurred for the protection of large populations may be considered justified for situations in which the collective dose avoided by the emergency operation is significantly larger than that incurred by the workers involved.

- Exposure accountability is maintained and proper personnel radiological monitoring equipment is provided for all personnel during emergency conditions.

- Access to high radiation areas is only permitted with prior approval of the applicable Radiation Protection Manager. Personnel are not allowed to enter known or potential high radiation areas unless their exposure has been properly evaluated.

- Periodic habitability surveys of emergency facilities are performed during an emergency. If the facility is determined to be uninhabitable, the facility is evacuated in order to prevent or minimize exposure to radiation and radioactive materials. Alternate assembly areas are established, as necessary, to relocate and monitor evacuated personnel.

**3. Personnel Monitoring**

a. Emergency workers will receive TLD badges and personal self-reading dosimeters capable of measuring expected exposures on a real time basis. The capability exists for the emergency processing of TLDs on a 24-hour per day basis, if necessary.

b. Emergency worker dose records are maintained by the Radiation Protection Managers (as appropriate) in accordance with the emergency and radiological protection procedures. Emergency workers are instructed to read their dosimeters frequently. TLDs may be processed with increased periodicity.

**4. Non-Exelon Personnel Exposure Authorization**

The responsibility for authorizing non-Exelon emergency workers (i.e. state and local agency emergency workers) to receive exposures in excess of the EPA General Public Protective Action Guides rests with the state and county organizations, except when such emergency workers are onsite. Authorization of exposures in excess of EPA General Public Protective Action Guides, in this latter instance, rests with the Station Emergency Director.

**5. Contamination and Decontamination**

During an emergency, the Station Emergency Director is responsible for preventing or minimizing personnel exposure to radioactive materials deposited on the ground or other surfaces. Special consideration should be given to setting up contamination control arrangements for personnel entering the OSC after completion of assigned activities.

a. During emergency conditions, normal plant contamination control criteria will be adhered to as much as possible. However, these limits may be modified by the applicable Radiation Protection Manager per existing Radiation Protection procedures, should conditions warrant.

b. Contamination Control Means: Personnel found to be contaminated will normally be attended to at decontamination areas located onsite. Temporary decontamination areas can also be set up inside at various locations. Decontamination showers and supplies are provided onsite with additional personnel decontamination equipment and capabilities. Shower and sink drains in the controlled area are routed to the miscellaneous waste processing system where the liquid is processed and monitored prior to discharge. Potentially contaminated emergency vehicles will be surveyed before they are allowed to leave the plant or offsite assembly area. If the survey area is not suitable for monitoring and decontamination due to radiological or other concerns, vehicles will be surveyed at an alternate location.

**6. Contamination Control Measures**

Controls are established 24 hours per day to contain the spread of loose surface radioactive contamination.

a. Contaminated areas are isolated as restricted areas with appropriate radiological protection and access control. Personnel leaving contaminated areas are monitored to ensure they and their clothing are not contaminated. If contamination above acceptable levels is found, they will be decontaminated in accordance with plant procedures. If normal decontamination procedures do not reduce personnel contamination to acceptable levels, the case will be referred to a competent medical authority. Supplies, instruments, and equipment that are in contaminated areas or have been brought into contaminated areas will be monitored prior to removal. If found to be contaminated, they will be decontaminated using normal plant decontamination techniques and facilities or may be disposed of as radwaste. Contaminated vehicles will be decontaminated before being released.

b. Measures will be taken to control onsite access to potentially contaminated potable water and food supplies. Under emergency conditions when uncontrolled releases of activity have occurred, eating, drinking, smoking, and chewing are prohibited in all station emergency response facilities until such time as habitability surveys indicate that such activities are permissible.

c. Restricted areas and contaminated items will be returned to normal use when contamination levels have been returned to acceptable levels. Contamination control criteria for returning areas and items to normal use are contained in the plant procedures.

**7. Decontamination of Relocated Personnel**

Nonessential onsite personnel may be evacuated to an offsite relocation center or assembly area, as discussed in Section J. Radiological controls personnel at that location monitor evacuees and determine the need for decontamination. Existing and temporary facilities to limit contamination and exposure will be utilized and established at the site as necessary during an emergency situation. In the event that decontamination of evacuees locally is not possible, personnel will be sent to designated locations for monitoring and decontamination. Provisions for extra clothing are made and suitable decontaminates are available for the expected type of contaminations, particularly with regards to skin contaminations.

## Section L: Medical and Public Health Support

This section describes the arrangements for medical services for contaminated injured individuals sent from the station.

### 1. Offsite Hospital and Medical Services

Hospital personnel have been trained and hospitals are equipped to handle contaminated or radiation injured individuals. Specifically, training of medical support personnel at the agreement hospitals will include basic training on the nature of radiological emergencies, diagnosis and treatment, and follow-up medical care. Station personnel are available to assist medical personnel with decontamination radiation exposure and contamination control. Arrangements, by letter of agreement or contract, are maintained by Exelon Nuclear with a qualified hospital located in the vicinity of each nuclear generating station for receiving and treating contaminated or exposed persons with injuries requiring immediate hospital care. Exelon Nuclear shall provide medical consultants to aid in any special care necessary at these facilities.

Arrangements are also maintained by the corporate office with a qualified major medical facility well equipped and staffed for dealing with persons having radiation injuries and whenever necessary, such persons will be transferred to this major hospital facility for extended specialized treatment. Exelon Nuclear will have available to the staff of this hospital, medical consultants who will provide the direction of the special care necessary for the treatment of persons having radiation injuries.

These agreements are verified annually. Refer to section II.P.4 for details.

### 2. Onsite First Aid Capability

Each nuclear station maintains onsite first aid supplies and equipment necessary for the treatment of contaminated or injured persons. In general, physicians or nurses are not staffed at Exelon Nuclear's generating stations, and as such, medical treatment given to injured persons is of a "first aid" nature. Each station does have an industrial hygiene advisor. Additionally, the Radiation Protection Technicians at each nuclear station are experienced in control of radioactive contamination and decontamination work. Station personnel are also trained and qualified to administer first aid. At least two of these individuals are available on shift at all times. The functions of station personnel in handling onsite injured people are:

1) Afford rescue;

2) Administer first aid including such resuscitative measures as are deemed necessary;

3) Begin decontamination procedures; and

4) Arrange for suitable transportation to a hospital when required.

Primary attention shall be directed to the actual factors involved in the treatment of casualties, such as: control of bleeding, resuscitation including heart and lung, control of bleeding after resuscitation, protection of wounds from bacterial or radioactive contamination and the immobilization of fractures.

Station personnel provide an initial estimate of the magnitude of surface contamination of the injured and preliminary estimates of total body dose to the injured. Primary rapid and simple decontamination of the surface of the body (when possible and advisable) before transportation to a designated hospital may be carry out as directed or performed by Radiation Protection personnel. When more professional care is needed, injured persons are transported to a local clinic or hospital. Contaminated and injured persons are transported to a dedicated facility specified for each Nuclear Station.

**3. Medical Service Facilities**

Because of the specialized nature of the diagnosis and treatment of radiation injuries, Corporate Emergency Preparedness maintains an agreement with REAC/TS. REAC/TS is a radiological emergency response team of physicians, nurses, health physicists and necessary support personnel on 24-hour call to provide consultative or direct medical or radiological assistance at the REAC/TS facility or at the accident site. Specifically, the team has expertise in and is equipped to conduct: medical and radiological triage; decontamination procedures and therapies for external contamination and internally deposited radionuclides, including chelation therapy; diagnostic and prognostic assessments or radiation-induced injuries; and radiation dose estimates by methods that include cytogenetic analysis, bioassay, and in vivo counting.

In addition to REAC/TS, respective Station Annexes may identify additional medical consultants, based on agreements with local hospitals, to support personnel training and medical response.

**4. Medical Transportation**

Arrangements are made by each nuclear generating station for prompt ambulance transport of persons with injuries involving radioactivity to designated hospitals. Such service is available on a 24-hour per day basis and is confirmed by letter of agreement. Radiation monitoring services shall be provided by Exelon Nuclear whenever it becomes necessary to use the ambulance service for the transportation of contaminated persons.

A qualified Radiation Protection person shall accompany the ambulance to the hospital. Additional Radiation Protection personnel may be contacted and dispatched to local hospitals to assist in the monitoring and decontamination of the injured victim and hospital and ambulance facilities and personnel.

## Section M: Reentry and Recovery Planning

This section describes the measures to be taken for reentry into the areas of the nuclear power station which have been evacuated as a result of an accident. It also outlines the Exelon Nuclear Recovery Organization and its concepts of operation.

### 1. Reentry and Recovery

a. Evaluating Reentry Conditions

During an emergency, immediate actions are directed toward limiting the consequences of the accident to afford maximum protection to station personnel and the general public. Once corrective measures have been taken and effective control of the plant has been re-established, a more methodical approach to reentry is taken. This E-Plan divides reentry into two separate categories:

- Reentry *during the emergency phase of an accident* is performed to save a life, control a release of radioactive material, prevent further damage to plant equipment or restore plant equipment. If necessary, this category of reentry may be performed using emergency exposure limits. Briefings, rather than written radiation protection procedures, may be used when making these entries.

  All reentry activities conducted during the emergency are authorized by the Station Emergency Director and coordinated by the OSC Director and the Radiation Protection Manager.

- Reentry *during the recovery phase of an accident* is performed using normal exposure limits. Either normal procedures or procedures that consider existing as well as potential conditions inside affected areas are developed specifically for each reentry.

  Reentry activities during the recovery phase are authorized by the Recovery Director and coordinated by the recovery organization managers in charge of personnel making the reentry.

The following items are considered when planning for any reentry:

- Review of available radiation surveillance data to determine plant areas potentially affected by radiation and/or contamination.

- Review of radiation exposure history of personnel required to participate in the accident mitigation or recovery operations.

- Determination of the need for additional personnel and the sources of these additional personnel.

- Review of adequacy of radiation survey instrumentation and equipment (types, ranges number, calibration, etc.).

- Review of non-radiological hazards and required protective measures (e.g., fire, electrical, Hazmat).
- Pre-planning of activities and briefings for the reentry team that include the following:
  - Personnel knowledge requirements.
  - Methods and procedures that will be employed during the entry.
  - Specific tasks to be performed.
  - Anticipated radiation and contamination levels.
  - Radiation survey equipment and types and ranges of dosimetry required.
  - Shielding requirements and availability.
  - Appropriate communications.
  - Protective clothing and equipment requirements.
  - Access control procedures.
  - Decontamination requirements.
  - De-briefing requirements.
  - Respiratory protection.
- A review of security controls to prevent unauthorized or unintentional entry into hazardous areas.

b. Evaluating Entry into Recovery

The Recovery Phase is that period when major repairs are being performed to return the plant to an acceptable condition and the possibility of the emergency condition degrading no longer exists. Once the plant has been stabilized, contained and controlled, the Recovery Phase may be entered. It is the responsibility of the Station Emergency Director to classify Recovery after obtaining authorization from the Corporate Emergency Director.

Establishment of Recovery can be conducted from any emergency classification level. However, it is possible that the lower classifications of Unusual Event and Alert will conclude with the event being terminated. There may be cases where certain EAL initiating conditions remain exceeded, but the station is under control and no further danger of degradation exists. In such a case, it may be appropriate to enter Recovery. Site Area and General Emergencies will require a Recovery Phase to be established prior to event termination. Exelon Nuclear may consult with/notify cognizant governmental agencies prior to declaring Recovery or event termination.

Termination/Recovery considerations are contained in the implementing procedures to provide guidance for evaluating the risk of entering Recovery without alleviating the intent of the Initiating Condition. The purpose of Recovery is to provide the necessary personnel to handle the long-term activities and to return the plant to an acceptable condition.

The following conditions are guidelines for the determination of establishing Recovery (this is not intended to be a complete list and additional criteria may apply, depending on the specifics of the event):

- The risk to the health and safety of the public has been mitigated.
- Plant parameters and equipment status have been established and controlled.
- In-plant radiation levels are stable or decreasing, and acceptable, given the plant conditions.
- The potential for uncontrolled releases of radioactive material to the environment has been eliminated.
- Environmental monitoring has been established.
- The radioactive plume has dissipated and plume tracking is no longer required (the only environmental assessment activities in progress are those necessary to assess the extent of deposition resulting from passage of the plume).
- Exelon Nuclear workers have been protected.
- Any security threat has been neutralized, and/or plant security is under the direction of Exelon Nuclear personnel.
- Adequate plant safety systems are operable.
- The reactor is in a stable shutdown condition and long-term core cooling is available.

- The fuel pool damage has been mitigated, or spent fuel damage has been contained and controlled.
- Primary and/or secondary containment integrity has been established.
- Plant systems and equipment are restored and/or replaced such that plant conditions are stable highly unlikely to degrade further.
- Conditions that initiated the emergency have been contained, controlled, eliminated or stabilized such that the classification is no longer applicable.
- The operability and integrity of radioactive waste systems, decontamination facilities, power supplies, electrical equipment and of plant instrumentation including radiation monitoring equipment.
- Any fire, flood, earthquake or similar emergency condition or threat to security no longer exists.
- All required notifications have been made.
- Discussions have been held with federal, state and county agencies and agreement has been reached to terminate the emergency.
- At an Alert or higher classification, the ERO is in place and emergency facilities are activated.
- Any contaminated injured person has been treated and/or transported to a medical care facility.
- Offsite conditions do not unreasonably limit access of outside support to the station and qualified personnel and support services are available.

It is not necessary that all conditions listed above be met; however, all items must be considered prior to entering the recovery phase. For example, it is possible after a severe accident that some conditions remain that exceed an Emergency Action Level, but entry into the Recovery Phase is appropriate.

**2. Recovery Organization**

Once plant conditions have been stabilized and the Recovery Phase has been initiated, the Emergency Director may form a Recovery Organization for long-term operations. These types of alterations will be discussed with the NRC prior to implementation.

- For events of a minor nature, (i.e. for Unusual Event classifications) the normal on shift organization is normally adequate to perform necessary recovery actions.

- For events where damage to the plant has been significant, but no offsite releases have occurred and/or protective actions were not performed, (i.e. for Alert classifications) the station Emergency Response Organization, or portions thereof, should be adequate to perform the recovery tasks prior to returning to the normal station organization.

- For events involving major damage to systems required to maintain safe shutdown of the plant and offsite radioactive releases have occurred, (i.e. for Site Area Emergency or General Emergency classifications) the station recovery organization is put in place.

The specific members of the station recovery organization are selected based on the sequence of events that preceded the recovery activities as well as the requirements of the recovery phase. The basic framework of the station recovery organization is as follows:

a. The Recovery Director: The Corporate Emergency Director is initially designated as the Recovery Director. The Recovery Director is charged with the responsibility for directing the activities of the station recovery organization. These responsibilities include:

    - Ensuring that sufficient personnel, equipment, or other resources from Exelon and other organizations are available to support recovery.

    - Directing the development of a recovery plan and procedures.

    - Deactivating any of the plant Emergency Response Organization which was retained to aid in recovery, in the appropriate manner. Depending upon the type of accident and the onsite and offsite affects of the accident, portions of the ERO may remain in place after initiation of the recovery phase.

    - Coordinating the integration of available federal and state assistance into onsite recovery activities.

    - Coordinating the integration of Exelon support with federal, state and county authorities into required offsite recovery activities.

    - Approving information released by the public information organization which pertains to the emergency or the recovery phase of the accident.

    - Determining when the recovery phase is terminated.

b. The Recovery Plant Manager: The Station Manager or a designated alternate will become the Recovery Plant Manager. The Recovery Plant Manager reports to the Recovery Director and is responsible for:

    - Coordinating the development and implementation of the recovery plan and procedures.

- Ensuring that adequate engineering activities to restore the plant, are properly reviewed and approved.
- Directing all onsite activities in support of the station recovery effort.
- Designating other Exelon recovery positions required in support of onsite recovery activities.

c. The Recovery Offsite Manager: A senior Corporate Emergency Preparedness or Regulatory Affairs individual, or a designated alternate, is the Recovery Offsite Manager. The Recovery Offsite Manager reports to the Recovery Director and is responsible for:

- Providing liaison with offsite agencies and coordinating Exelon assistance for offsite recovery activities.
- Coordinating Exelon ingestion exposure pathway EPZ sampling activities and the development of an offsite accident analysis report.
- Developing a radiological release report.
- Designating other Exelon recovery positions required in support of offsite recovery activities.

d. The Company Spokesperson: A senior Exelon management individual is designated as the Company Spokesperson. The Company Spokesperson reports to the Recovery Director and is responsible for:

- Functioning as the official spokesperson to the press for Exelon on all matters relating to the accident or recovery.
- Coordinating non-Exelon public information groups (federal, state, county, etc.).
- Coordinating media monitoring and rumor control.
- Determining what public information portions of the ERO will remain activated.

The remainder of the recovery organization is established and an initial recovery plan developed at the end of the emergency phase or just after entry into the recovery phase. Consideration is given to recovery activity needs and use of the normal station organizations. Individual recovery supervisors may be designated in any or all of the following areas:

- Training
- Radiation Protection
- Chemistry

- Technical/Engineering Support
- Nuclear Oversight
- Operations
- Security
- Maintenance
- Special Offsite Areas (Community Representatives, Environmental Samples, Investigations, etc.)

**3. Recovery Phase Notifications**

When the decision is made to enter the recovery phase, all members of the Exelon ERO are informed of the change. All Exelon personnel are instructed of the Recovery Organization and their responsibilities to the recovery effort.

**4. Total Population Exposure**

Total population exposure calculations are performed and periodically updated during the recovery phase of an accident. A method has been developed for estimating the total population exposure resulting from the accident from data collected in cooperation with the state and other federal agencies. Total population exposure is determined through a variety of procedures including:

- Examination of pre-positioned TLDs.
- Bioassay.
- Estimates based on release rates and meteorology.
- Estimates based on environmental monitoring of food, water, and ambient dose rates.

The state will be the lead agency in the collection and analysis of environmental air, soil, foliage, food, and water samples and for the generation of radiation monitoring reports. Exelon Nuclear environmental sampling activities will be coordinated with state efforts, as requested, and results shared with cognizant agencies.

## Section N: Drill and Exercise Program

This section describes the Drill and Exercise Program that Exelon Nuclear has implemented to:

- Verify the adequacy of the Emergency Preparedness Program.
- Develop, maintain, and evaluate the capabilities of the ERO to respond to emergency conditions and safeguard the health and safety of station personnel and the general public.
- Identify deficiencies in the E-Plan and the associated procedures, or in the training of response personnel, and ensure that they are promptly corrected.
- Ensure the continued adequacy of emergency facilities, supplies and equipment, including communications networks.

**1. Exercises**

a. Biennial Exercises

Federally prescribed exercises are conducted at each nuclear station in order to test the adequacy of timing and content of implementing procedures and methods; to test emergency equipment and communication networks; and to ensure that emergency personnel are familiar with their duties. Exercises involving offsite agency participation, required under Section F.2.c & d to 10 CFR 50 Appendix E, are conducted at each nuclear station based on FEMA-REP-14 guidance and the respective state and local emergency response plans.

Partial participation means appropriate offsite authorities shall actively take part in the exercise sufficient to test direction and control functions to include protective action decision making related to Emergency Action Levels and communication capabilities among affected state and local authorities and Exelon Nuclear.

Full participation exercises will include appropriate offsite local and state authorities and Exelon personnel physically and actively taking part in testing the integrated capability to adequately assess and respond to an accident at the plant. Additionally, full participation exercises will includes testing the major observable portions of the onsite and offsite emergency plans and mobilization of state, local, and Exelon personnel and other resources in sufficient numbers to verify the capability to respond to the accident scenario.

Where partial or full participation by offsite agencies occurs, the sequence of events simulates an emergency that results in the release of radioactivity to the offsite environs, sufficient in magnitude to warrant a response by offsite authorities.

b. Off-Year Exercises

An Off-Year Exercise is conducted at each station during the calendar year when an NRC Evaluated Exercise is not scheduled. An Off-Year Exercise shall involve a combination of at least two facilities in order to demonstrate at least two of the functions of management and coordination of emergency response, accident assessment, protective action decision-making, or plant system repair and corrective actions. For Off-Year Exercises involving no or limited participation by offsite agencies, emphasis is placed on development and conduct of an exercise that is more mechanistically and operationally realistic. Players will be able, by implementing appropriate procedures and corrective actions, to determine the outcome of the scenario to a greater extent than when core damage and the release of radioactivity are prerequisites for demonstration of all objectives.

c. Pre-Exercises

Pre-Exercise Drills should be conducted prior to a Biennial Exercise where Federal Emergency Management Agency (FEMA) evaluation of state and local performance is expected. Pre-Exercise Drills may be conducted prior to Off-Year Exercises that only involve the utility. The Pre-Exercise is a training and experience tool for the participants to sharpen awareness and practice skills necessary to accomplish specific E-Plan duties and responsibilities.

Exercises provide an opportunity to evaluate the ability of participating organizations to implement a coordinated response to postulated emergency conditions. Exercises are conducted to ensure that all major elements of the E-Plan and preparedness program are demonstrated at least once in each six-year period. Each station shall conduct at least one off-hours exercise between 6:00 p.m. and 4:00 a.m. every cycle (6 years). Weekends and holidays are also considered off-hours periods. Provisions will be made for qualified personnel from Exelon, federal, state, or local governments to observe and critique each exercise as appropriate.

**2. Drills**

In addition to the exercises described above, Exelon conducts drills for the purpose of testing, developing, and maintaining the proficiency of emergency responders. Drills are scheduled on the Emergency Preparedness annual events plan, which contains provisions for the following drills:

a. Communication Drills

- Monthly - The capability of the Nuclear Accident Reporting System (NARS) to notify the state and local government warning points and EOCs within the plume exposure pathway EPZ are demonstrated. Also, the capability to notify the NRC is demonstrated using the Emergency Notification System (ENS) and the Health Physics Network (HPN) where available.

- Quarterly - The capability to notify the NRC Region, FEMA Region, American Nuclear Insurers (ANI) and federal emergency response organizations as listed in the Emergency Response Facilities (ERF) Telephone Directory are demonstrated from the EOF. Also, computer and critical communications equipment shall be functionally tested.

  Communications between states outside the 10 mile EPZ but within the 50-mile EPZ are tested by the host state.

- Annually - The emergency communications systems outlined in Section F are fully tested. This includes (1) communications between the plant and the state and local EOCs and Field Monitoring Teams, and (2) communications between the CR, the TSC, and the EOF.

Each of these drills includes provisions to ensure that all participants in the test are able to understand the content of the messages.

b. Fire Drills: Fire drills shall be conducted at each nuclear station in accordance with Station Technical Specifications and/or Station procedures.

c. Medical Emergency Drills: A medical emergency drill, involving a simulated contaminated individual, and containing provisions for participation by local support services organizations (i.e., ambulance and support hospital) are conducted annually at each nuclear station. local support service organizations, which support more than one station, shall only be required to participate once each calendar year. The offsite portions of the medical drill may be performed as part of the required biennial exercise.

d. Radiological Monitoring Drills: Plant environs and radiological monitoring drills (onsite and offsite) are conducted annually. These drills include collection and analysis of all sample media (such as, water, vegetation, soil, and air), and provisions for communications and record keeping.

e. Health Physics Drills: Health Physics Drills involving a response to, and analysis of, simulated airborne and liquid samples and direct radiation measurements within the plant are conducted semi-annually. At least annually, these drills shall include a demonstration of the sampling system capabilities, or the Core Damage Assessment Methodology (CDAM) objectives as applicable.

f. Augmentation Drills: Augmentation drills serve to demonstrate the capability of the process to augment the on-shift staff with a TSC, OSC and EOF in a short period after declaration of an emergency. These drills are conducted using the following methods:

   - Quarterly, each station will initiate an unannounced off-hours ERO augmentation drill where no actual travel is required. Each region's Corporate ERO shall also perform an unannounced off-hours ERO augmentation drill that may be conducted independent of, or in conjunction with, a station drill.

- At least once per drill cycle (every 6 years), an off-hours unannounced activation of the ERO Notification System with actual response to the emergency facilities is conducted by each station. Each region's Corporate ERO need only participate once per cycle.

g. Accountability Drills: Accountability drills are conducted annually. The drill includes identifying the locations of all individuals within the protected area.

**3. Conduct of Drills and Exercises**

Advance knowledge of the scenario will be kept to a minimum to allow "free-play" decision making and to ensure a realistic participation by those involved. Prior to the drill or exercise, a package will be distributed to the controllers and evaluators that will include the scenario, a list of performance objectives, and a description of the expected responses.

For each emergency preparedness exercise or drill conducted, a scenario package is developed that includes at least the following:

a. The basic objective(s) of the drill or exercise and the appropriate evaluation criteria.

b. The date(s), time period, place(s), and participating organizations.

c. The simulated events.

d. A time schedule of real and simulated initiating events.

e. A narrative summary describing the conduct of the scenario to include such things as simulated casualties, offsite fire department assistance, rescue of personnel, use of protective clothing, deployment of radiological monitoring teams, and public information activities.

f. A list of qualified participants.

Prior approval by the appropriate station management is obtained for all drills and exercises conducted in support of the Emergency Preparedness Program.

**4. Critique and Evaluation**

Drill and exercise performance objectives are evaluated against measurable demonstration criteria. As soon as possible following the conclusion of each drill or exercise, a critique is conducted to evaluate the ability of the ERO to implement the E-Plan and procedures.

A formal written critique report is prepared by Emergency Preparedness following a drill or exercise involving the evaluation of designated objectives or following the final simulator set with ERO participation. The report will evaluate the ability of the ERO to respond to a simulated emergency situation. The report will also contain corrective actions and recommendations.

Biennially, representatives from the NRC observe and evaluate the licensee's ability to conduct an adequate self-critical critique. For partial and full offsite participation exercises both the NRC and FEMA will observe, evaluate, and critique.

Critique comments identified by participants during a training drill where objectives are not formally being evaluated will be reviewed and dispositioned by Emergency Preparedness, but do not require a formal report.

**5. Resolution of Drill and Exercise Findings**

The critique and evaluation process is used to identify areas of the Emergency Preparedness Program that require improvement. The Emergency Preparedness Manager is responsible for evaluation of recommendations and comments to determine which items will be incorporated into the program or require corrective actions, and for the scheduling, tracking, and evaluation of the resolution to the items.

Whenever exercises and/or drills indicate deficiencies in the E-Plan or corresponding implementing procedures, such documents will be revised as necessary.

## Section O: Emergency Response Training

This section describes the emergency response training that is provided to those who may be called upon in an emergency. It outlines the training provided by Exelon Nuclear to both its employees and offsite support personnel requiring site access.

### 1. Assurance of Training

The E-Plan Training Program assures the training, qualification, and requalification of individuals who may be called on for assistance during an emergency. Specific emergency response task training, prepared for each E-Plan position, is described in lesson plans and study guides. The lesson plans, study guides, and written tests are contained in the ERO Training Program. Responsibilities for implementing the training program are contained in plant procedures. A description of the content of the training courses is given in TQ-AA-113.

Offsite training is provided to support organizations that may be called upon to provide assistance in the event of an emergency. The following outlines the training received by these organizations:

a. Emergency Preparedness shall annually train, or document an annual written offer to train, those non-Exelon Nuclear organizations referenced in the Station Annexes that may provide specialized services during a nuclear plant emergency (e.g., local law enforcement, fire-fighting, medical services, transport of injured, etc.). The training made available is designed to acquaint the participants with the special problems potentially encountered during a nuclear plant emergency, notification procedures and their expected roles. Those organizations that must enter the site shall also receive site-specific emergency response training and be instructed as to the identity (by position and title) of those persons in the onsite organization who will control their support activities.

b. Training of offsite emergency response organizations is described in their respective radiological emergency plans, with support provided by Exelon Nuclear as requested.

### 2. Functional Training of the ERO

In addition to general and specialized classroom training, members of the Exelon Nuclear ERO receive periodic performance based emergency response training. Performance based training is provided using one or more of the following methods:

- Familiarization Sessions: A familiarization session is an informal, organized tabletop discussion of predetermined objectives.

- Walk Throughs: Consists of a facility walk through to familiarize plant ERO personnel with procedures, communications equipment, and facility layout. Walk throughs also provide the opportunity to discuss facility activities, responsibilities and procedures with an instructor.

- Drills: A drill is a supervised instruction period aimed at testing, developing and maintaining skills in a particular operation. Drills described in Section N of this plan are a part of training. These drills allow each individual the opportunity to demonstrate the ability to perform their assigned emergency functions. During drills, on-the-spot correction of erroneous performance may be made and a demonstration of the proper performance offered by the Controller.

**3. First Aid Response**

Selected station personnel are trained in accordance with the Exelon Nuclear approved First Aid Program. First-Aid Teams will likely be augmented with additional personnel such as Fire Brigade Members and other personnel qualified to assist in the rescue.

**4. Emergency Response Organization Training Program**

Exelon Nuclear ERO personnel who are responsible for implementing this plan receive specialized training. The training program for emergency response personnel is developed based on the requirements of 10 CFR 50, Appendix E and position specific responsibilities as defined in this document.

On-Shift emergency response personnel perform emergency response activities as an extension of their normal duties and are trained annually as part of their duty specific training. Additional Emergency Preparedness information is provided as part of the Station Nuclear General Employee Training.

New ERO personnel receive an initial overview course that familiarizes them with the E-Plan by providing basic information in the following areas as well as specific information as delineated in the sections below:

- Planning Basis
- Emergency Classifications
- Emergency Response Organization and Responsibilities
- Call-out of Emergency Organization
- Emergency Response Facilities
- Communications Protocol/Emergency Public Information
- Offsite Organizations

Emergency response personnel in the following categories receive knowledge and/or performance based training initially and retraining thereafter on an annual basis as defined within Appendix 4 or applicable Station Annex:

a. Directors, Managers and Coordinators within the station and corporate ERO: Personnel identified by the Emergency Response Organization Telephone Directory as Directors, Managers and Coordinators for the station and corporate EROs receive training appropriate to their position in accordance with the approved ERO Training Program. These personnel receive specialized training in the areas of:

- Notifications
- Emergency Classifications
- Protective Action Recommendations
- Emergency Action Levels
- Emergency Exposure Control

Selected Directors, Managers, Coordinators and Shift Emergency Directors receive training in accordance with the approved ERO Training Program. Training in accident assessment sufficient to classify an event and to mitigate the consequences of an event are also covered.

b. Personnel Responsible for Accident Assessment:

The skills and knowledge required to perform plant stabilization and mitigation are a normal function of operations specific positions, as identified in Section B of this plan. Power changes and planned and unplanned reactor shutdowns are handled on a normal operation basis. Subsequent plant stabilization and restoration is pursued utilizing normal operating procedures. Licensed Operators receive routine classroom and simulator training to ensure proficiency in this area.

1) Active Senior Licensed Control Room Personnel shall have training conducted in accordance with the approved ERO Training Program such that proficiency is maintained on the topics listed below. These subjects shall be covered as a minimum on an annual basis.

- Event Classification.
- Protective Action Recommendations.
- Radioactive Release Rate Determination.
- Notification form completion and use of the Nuclear Accident Reporting System (NARS).
- Federal, state and local notification procedures as appropriate.
- Site specific procedures for activating the onsite and offsite ERO.

To remove peripheral duties from the Operations shift, the following group of positions responsible for accident assessment, corrective actions, protective actions, and related activities receive the training listed below:

2) Core Damage Assessment Personnel: During an emergency when core/cladding damage is suspected, a specialized group of trained individuals perform core damage assessment. At a minimum, personnel responsible for core damage assessment receive classroom and hands-on training in the following areas:

   - Available Instrumentation and Equipment.
   - Isotopic Assessment and Interpretation.
   - Computerized Core Damage Assessment Methodology (CDAM) and/or proceduralized assessment methods.

c. Radiological Monitoring Teams and Radiological Analysis Personnel

1) Offsite Radiological Monitoring: Offsite radiological monitoring is performed by trained individuals who provide samples and direct readings for dose assessment calculations and dose projection comparisons.

   Personnel identified as members of Field Monitoring Teams receive training in accordance with the approved training program. Field Monitoring Team members receive classroom and hands-on training in the following areas:

   - Equipment and Equipment Checks
   - Communications
   - Plume Tracking Techniques

2) Personnel Monitoring: Personnel monitoring is performed by trained individuals who monitor station personnel and their vehicles for contamination during an emergency. Personnel Monitoring Team members receive classroom and hands-on training in the following areas:

   - Personnel Monitoring Equipment and Techniques
   - Decontamination Techniques for Personnel
   - Decontamination Techniques for Vehicles

3) Dose Assessment: Dose Assessment training includes the skills and knowledge necessary for calculation and interpretation of an offsite release and its impact on the environment under varying meteorological conditions. Individuals responsible for performing dose assessment are trained in the following areas:

- Computerized Dose Assessment
- Protective Action Recommendations
- Field Monitoring Team Interface
- Protective Action Guidelines associated with offsite plume exposure doses
- Basic Meteorology

d. Police, Security, and Fire Fighting Personnel

1) Local Police and Fire Fighting Personnel: The local Police and Fire Departments are invited to receive training as outlined in Part 1.a of this section.

2) Security Personnel: Station security personnel are trained in accordance with training defined by the Nuclear General Employee Training (NGET) and Exelon Nuclear Security Program.

3) Fire Control Teams (fire brigades): Station fire brigades are trained in accordance with training defined by the Exelon Nuclear Fire Protection Program. Fire Brigade personnel are considered the primary members of rescue teams and will receive the appropriate EP training as part of their training program. Training also includes rescue of personnel from hazardous environments.

e. Repair and Damage Control Teams: Operations, Maintenance and Radiation Protection personnel are trained as part of their normal job specific duties to respond to both normal and abnormal plant operations.

Operations personnel are trained to: (1) recognize and to mitigate degrading conditions in the plant, (2) mechanically and electrically isolate damaged or malfunctioning equipment, (3) isolate fluid leaks, and (4) minimize transients.

Maintenance personnel are trained to troubleshoot and repair damaged or malfunctioning electrical, mechanical, or instrumentation systems as appropriate to their job classification.

Radiation Protection personnel are trained to assess the radiological hazards associated with equipment repair and instruct personnel as to the appropriate protective clothing requirements, respiratory protection requirements, stay times, and other protective actions specific to the conditions present.

At least 50% of personnel from those departments, who are potential responders to the OSC as Damage Control Team members, are required to be qualified in the use of respiratory protection equipment. This includes in-plant supervision and craft/technicians for the following departments:

- Operations
- Radiation Protection
- Chemistry
- Maintenance (mechanical, electrical and I&C)

f. First Aid and Rescue Personnel: First aid and rescue team members receive training as outlined in Part 3 of this section.

g. Local Support Service Personnel: Local support service personnel providing assistance during an emergency are invited to receive training as outline in Parts 1.a and 1.b of this section.

h. Medical Support Personnel: Onsite medical personnel receive specialized training in the handling of contaminated victims and hospital interface. Offsite ambulance and hospital personnel are offered annual training in accordance with a program provided by Emergency Preparedness.

i. Public Information Personnel: Corporate and station personnel responsible for disseminating emergency public information and responding to media and public information requests receive specialized public information training.

j. Communications Personnel: ERO personnel receive training on communications protocol as a part of the initial Emergency Response Overview Course. Personnel using specialized communications equipment that is not part of their normal daily function receive initial and requalification training on the equipment. Personnel involved in notifications to offsite agencies receive specialized training in the notification process.

**5. General, Initial, and Annual Training Program Maintenance**

a. Station Departments and Emergency Preparedness share the responsibility for ensuring that the ERO receives all necessary training and retraining. In order to carry this out, responsibilities are assigned as follows:

Corporate Responsibilities for Corporate ERO Personnel

- Scheduling and conducting initial, retraining, and make-up classes.
- Acting as the sole contact point for ensuring attendance.
- Record keeping for the training courses, including dates of scheduled classes and non-attendance information.

- Verifying that all emergency response personnel training records are current.
- Ensure instructional materials are prepared and reviewed every two years.

Station Responsibilities for Station ERO Personnel

- Station management shall ensure the attendance of onsite personnel for training, including required E-Plan courses.
- Each Station shall conduct onsite emergency personnel initial and retraining for station Emergency Response Personnel using approved lesson plans.
- The Station Training Department shall provide those shift personnel included in a continuing training program an annual review of the following items as a minimum:
  - Assembly Areas.
  - Emergency Response Facility assignment.
  - Potential Hazards (radiological and non-radiological).
  - Anticipated actions including assembly requirements, protective equipment requirements (clothing, masks, SCBA, etc.), the use of KI, emergency exposure limits and accountability requirements.

b. Initial and Requalification ERO Training: The proficiency of emergency response personnel (as defined in 10 CFR 50 Appendix E) is ensured by the following means:

- Assigning persons to emergency duties that are similar to those performed as a part of their regular work assignment or experience.
- Initial training and annual retraining on applicable generic and site-specific portions of the E-Plan and the corresponding implementing procedures. Individuals not demonstrating the required level of knowledge in initial or retraining classes receive additional training on the areas requiring improvement. Annual retraining is conducted on a calendar year basis, or as indicated in the Station Annex.
- Training on E-Plan changes shall be completed within one hundred twenty (120) days of implementation of the change.
- Participation in exercises and/or drills as developed or authorized by the Emergency Preparedness Department and designed to sharpen those skills that they are expected to use in the event of a nuclear emergency.

All personnel assigned position specific responsibilities in the ERO are documented by inclusion in the Emergency Response Organization Telephone directory listing of positions and personnel.

c. Nuclear General Employee Training (NGET): All personnel with unescorted station access are provided with initial orientation training on the notification and instruction methods used in the event of an emergency. Additionally, all badged individuals also receive initial orientation on the basic principles of radiological safety including the effects of radiation and the theory and use of radiation detection devices. Appropriate actions for escorted individuals shall be the responsibility of the escort. NGET provides initial and annual requalification training on the basic elements of the E-Plan for all personnel working at the plant. Specifically, these elements include:

- Station emergency alarms and their meaning
- Assembly areas
- Site and Exclusion Area Evacuation procedures
- Special precautions and limitations during an emergency
- Purpose of the E-Plan

## Section P: Responsibility for the Maintenance of the Planning Effort

This section describes the responsibilities for development, review and distribution of the E-Plan and actions that must be performed to maintain the emergency preparedness program. It also outlines the criteria for insuring that personnel who perform the planning are properly trained.

### 1. Emergency Preparedness Staff Training

The Emergency Preparedness staff is involved in maintaining an adequate knowledge of state of the art planning techniques and the latest applications of emergency equipment and supplies. At least once each calendar year each member of the Emergency Preparedness staff is involved in one of the following activities:

- Training courses specific or related to emergency preparedness.
- Observation of or participation in drills and/or exercises at other stations.
- Participation in industry review and evaluation programs.
- Participation in regional or national emergency preparedness seminars, committees, workshops or forums.
- Specific training courses in related areas, such as systems, equipment, operations, radiological protection, or Problem Identification & Resolution (PI&R).

### 2. Authority for the Emergency Preparedness Effort

The Site Vice Presidents are responsible for the safe and reliable operation of the generating stations within Exelon Nuclear. The issuance and control of this plan and the activities associated with emergency preparedness at Exelon Nuclear shall be the overall responsibility of the Vice President, Operations Support. This individual is assigned the responsibility for overall implementation of the E-Plan and station Annexes.

### 3. Responsibility for Development and Maintenance of the Plan

Each regional Emergency Preparedness Manager is responsible for the overall radiological emergency preparedness program associated with the operation of the nuclear power stations within their respective region and to administer the program to ensure availability of resources in the event of an emergency. The regional Emergency Preparedness Managers report to an EP Director who in turn reports to the Vice President, Operations Support.

The Emergency Preparedness Managers are assisted by regional corporate and Station Emergency Preparedness staff. Specific responsibilities include the following:

Program Administration

- Develop and maintain the E-Plan, Station Annexes, implementing procedures and administrative documents.
- Develop and maintain 50.54(q) evaluations for changes to EP documents.
- Coordinate and maintain the EP Activities Schedule.
- Develop and maintain working relationships and coordinate meetings with Federal, state and local agencies.
- Ensure integration of plans between Exelon and offsite agencies.
- Provide an opportunity to discuss Emergency Action Levels and the availability of Nuclear Oversight audit results relating to interface with governmental agencies.
- Coordinate, negotiate and maintain agreements and contracts with offsite agencies and support organizations.
- Obtain Letters of Agreement with major medical facilities, and medical consultants specifically skilled in the medical aspects of radiation accidents and other medical consultants as might be necessary for the case of a person involved in a radiation incident.
- Coordinate the development and annual distribution of the station's public information publication.
- Coordinate and administer the Self Evaluation Program to monitor and evaluate the adequacy of the Emergency Preparedness Program.
- Coordinate and support EP Self-Assessments, Audits and Inspections.
- Ensure the documentation and resolution of adverse conditions in the emergency preparedness program discovered through drills, audits, etc. in accordance with the Exelon Nuclear Corrective Action Program.
- Coordinate and develop Operational Experience responses.
- Coordinate, document and review Performance Indicator data and reports.
- Provide oversight of Drill and Exercise Performance (DEP) evaluations during License Operator Requalification (LOR) Training.
- Coordinate and conduct EP Event reviews and reports.

- Maintain adequate documentation/files to support EP activities.
- Develop and manage the EP budget.
- Maintain the Emergency Response Facilities (ERF) Telephone Directory.

Drills and Exercises

- Coordinate and maintain the EP Drill and Exercise Schedule.
- Coordinate and conduct exercises and drills.
- Coordinate NRC, FEMA, state, and local exercise scheduling and development activities.
- Coordinate drill and exercise scenario development activities.
- Develop and publish drill and exercise scenario manuals.
- Coordinate and perform controller and evaluator functions for drills and exercises.
- Coordinate response cells for drills and exercises.
- Develop and issue drill and exercise reports.

Facilities and Equipment

- Provide maintenance and administration of the Alert and Notification System (ANS).
- Provide maintenance of the ERO call-out system.
- Ensure the Emergency Response Facilities are maintained in a constant state of readiness.
- Coordinate and review the EP equipment inventories.
- Coordinate and conduct maintenance and testing of the communications systems.
- Maintain the EP computer applications.

ERO Qualification and Administration

- Develop and maintain ERO Lesson Plans, Examinations, and Qualification Cards.
- Maintain EP NGET training content.

- Coordinate, schedule and conduct ERO qualification and requalification training.
- Oversee the maintenance of ERO training records.
- Maintain and coordinate publishing of the ERO Duty Rosters.
- Provide adequate oversight and support for the training of offsite response personnel.
- Coordinate conduct of Emergency Medical Assistance Program training.
- Coordinate annual training for the media.

Each Plant Manager is responsible for implementation of the E-Plan at their respective Stations. The Plant Manager has the following responsibilities for maintenance of the Emergency Preparedness Program:

- Ensure the adequate staffing and training of station ERO members.
- Schedule and conduct drills and exercises to maintain the state of readiness of the Emergency Preparedness Program.
- Ensure the operational readiness of station facilities and communication systems for use during an emergency.
- Ensure the operational readiness of station emergency equipment and supplies is maintained.
- Ensure the emergency response procedures and the training and retraining of Station Emergency Response personnel are maintained.

**4. E-Plan and Agreement Revisions**

The E-Plan, its Annexes, and supporting Agreements are reviewed on an annual basis. This review may also include applicable state and local emergency response agencies based on established agreements.

The annual E-Plan review/update includes required changes identified during audits, assessments, training, drills, and exercises. The Emergency Preparedness Director is responsible for determining which recommended changes are incorporated into a plan or emergency procedure revision. In those years when the review does not warrant a revision, a letter to that affect will be issued.

The E-Plan and its Annexes shall be revised as needed and the most current approved revisions shall remain in effect so long as they are certified as current. Revisions to the E-Plan are reviewed by the Stations' Plant Operational Review Committee (PORC) prior to approval. Changes to the plan are made without NRC approval only if such changes do not decrease the effectiveness of the plan per 10 CFR 50.54(q), and the plan as changed continues to meet the standards of 10 CFR 50.47(b) and the requirements of 10 CFR 50, Appendix E. Proposed changes that decrease or have a potential to decrease the effectiveness of the approved plan are not implemented without prior approval by the NRC.

- Proposed revisions to the E-Plan and Station Annexes shall be completed in accordance with the Exelon Nuclear review and approval processes.

- The E-Plan and Station Annexes shall normally be implemented simultaneously to be consistent at all sites. Regional issues may result in slight delayed implementation within one region; however, the changes are implemented simultaneously at each station and corporate response facility within the associated region.

- E-Plan and Station Annex changes shall be categorized as (1) minor/ administrative or (2) significant programmatic changes. Minor/administrative changes shall be implemented within 30 days of approval. Significant programmatic changes shall be implemented as soon as practical and within 60 days of final approval simultaneously at all sites.

- After review and approval, the E-Plan and Station Annexes shall be:

  a) Reviewed by the applicable Emergency Preparedness Manager(s) and EP Director, or designee(s), and

  b) Approved for use by the Vice President, Operations Support or designee.

- The Implementing Procedures shall be developed and revised concurrent with the E-Plan and Annexes, and reviewed every two years.

Annually, each Letter of Agreement is reviewed and certified current in order to assure the availability of assistance from each supporting organization not already a party to the individual State Plan for Radiological Accidents.

**5. E-Plan Distribution**

E-Plan manuals, Station Annexes and implementing procedures are distributed on a controlled basis to the Emergency Response Facilities. All controlled documents holders are issued revision changes upon approval. Selected Federal, state, and local agencies, and other appropriate locations requiring them are also issued copies. Procedures are in place that control the revision of the E-Plan and require the use of revision bars and individual page identifications (i.e., section of plan, revision number, etc.).

**6. Supporting Emergency Response Plans**

Other plans that support this E-Plan are:

- NUREG-1471, US Nuclear Regulatory Commission, "Concept of Operations: NRC Incident Response."
- National Response Plan (NRP), Nuclear/Radiological Incident Annex.
- Illinois Plan for Radiological Accidents (IPRA).
- The Iowa Emergency Plan.
- State of Wisconsin Peacetime Radiological Emergency Response Plan.
- Commonwealth of Pennsylvania Radiological Emergency Response Plan.
- State of Maryland Radiological Emergency Response Plan.
- Department of Energy, Region 5, “Radiological Assistance Plan."
- INPO Emergency Resources Manual.
- Nuclear Station Security Plans - Note: The Station Security Plan contains industrial security information that must be withheld from public disclosure under provisions of 10 CFR 2.790(d).
- State of New Jersey Radiological Emergency Response Plan for Nuclear Power Plants – Annex B: Oyster Creek.
- Emergency Operations Plan for Ocean County.
- State of Texas Emergency Management Plan – Annex D: Radiological Emergency Management.

**7. Implementing and Supporting Procedures**

Appendix 2 of this plan contains a listing, by number and title, of those procedures that implement this plan during an emergency (EP-AA/MA/MW-11X series procedures). Additionally, administrative procedures that outline the steps taken to maintain the Exelon Emergency Preparedness Program have been developed (EP-AA/MA/MW-12X series procedures) and are listed in Appendix 2.

**8. Cross Reference to Planning Criteria**

The Plan is formatted in the same manner as NUREG-0654, FEMA-REP-1, Revision 1, "Criteria for Preparation and Evaluation of Radiological Emergency Response Plans and Preparedness in support of Nuclear Power Plants." The use of this format lends itself to uncomplicated comparison of the criteria set forth in NUREG-0654, FEMA-REP-1.

**9. Audit/Assessment of the Emergency Preparedness Program**

To meet the requirements of 10 CFR 50.54(t), Exelon Nuclear Oversight shall coordinate an independent review the Emergency Preparedness Program to examine conformance with 10 CFR 50.47, 10 CFR 50.54, and 10 CFR 50 Appendix E. Included in the audit/assessment are the following:

- The E-Plan and associated implementing procedures.
- The Emergency Preparedness Training Program including drills and exercises.
- The readiness of the station Emergency Response Organization to perform its function.
- The readiness of facilities and equipment to perform as outlined in the plan and procedures.
- The interfaces between Exelon, the state, and county governmental agencies pertaining to the overall Emergency Preparedness Program.

Results of this audit are submitted for review to Corporate Management and the Station Vice President. The Emergency Preparedness Manager ensures that any findings that deal with offsite interfaces are reviewed with the appropriate agencies. Written notification will be provided to the state and counties of the performance of the audit and the availability of the audit records for review at Exelon facilities. Records of the audit are maintained for at least five years.

**10. Maintenance of Emergency Organization Telephone Directory**

Names and phone numbers of the Emergency Response Organization and support personnel shall be reviewed and updated at least quarterly.

## Appendix 1: References

References consulted in the writing of this E-Plan are listed in this section. With exception of regulatory requirements, inclusion of material on this list does not imply adherence to all criteria or guidance stated in each individual reference.

1. 10 CFR 50.47, Emergency Plans.

2. 10 CFR 50.72, Immediate Notification Requirements for Operating Nuclear Power Reactors.

3. 10 CFR 50 Appendix B, Quality Assurance Criteria for Nuclear Power Plants and Fuel Reprocessing Plants.

4. 10 CFR 50 Appendix E, Emergency Planning and Preparedness for Production and Utilization Facilities.

5. 10 CFR 20, Standards for Protection Against Radiation.

6. 10 CFR 70, 73, and 100.

7. 33 CFR 153.

8. 40 CFR 110, 112, 116, 118, 302 and 355.

9. 44 CFR 350.

10. 44 CFR 401.

11. 49 CFR 171 and 172.

12. NUREG-0654, "Criteria for Preparation and Evaluation of Radiological Emergency Response Plans and Preparedness in Support of Nuclear Power Plants," Revision 1, November, 1980.

13. NUREG-0654, Supplement 1, "Criteria for Utility Offsite Planning and Preparedness."

14. NUREG-0654, Supplement 3, "Criteria for Protective Action Recommendations for Severe Accidents."

15. NUREG-0396, "Planning Basis for the Development of State and Local Government Radiological Emergency Response Plans in Support of Light Water Nuclear Power Plants," Dec. 1978.

16. NUREG-0578, "TMI-2 Lessons Learned Task Force Status Report and Short-Term Recommendations."

17. NUREG-0696, Revision 1, Functional Criteria for Emergency Response Facilities.

18. NUREG-0737, Clarification of TMI Action Plan Requirements, dated October 1980.

19. NUREG-0737, Supplement 1, Requirements for Emergency Response Capability, December 1982.

20. NUREG-0728 - "Report to Congress: NRC Incident Response Plan."

21. US NRC Regulatory Guide 1.101, "Emergency Planning and Preparedness for Nuclear Power Reactors," revision 4, July, 2003.

22. U.S. NRC Response Technical Manual (RTM-96).

23. NEI 99-01, Methodology for Development of Emergency Action Levels.

24. EPA 400-R-92-001, October 1991, "Manual of Protective Action Guides and Protective Actions for Nuclear Incidents."

25. FEMA-REP-10, Guide for Evaluation of Alert and Notification Systems for Nuclear Power Plants.

26. FEMA-REP-14, Radiological Emergency Preparedness Exercise Evaluation Methodology.

27. FEMA-Guidance Memorandum, MS-1 "Medical Services."

28. Exelon Nuclear Quality Assurance Topical Report (QATR), NO-AA-10.

29. INPO Emergency Resources Manual.

30. "Maintaining Emergency Preparedness Manual," dated December, 1996 INPO 96-009.

31. "Federal Bureau of Investigation and Nuclear Regulatory Commission Memorandum of Understanding for Cooperation Regarding Threat, Theft, or Sabotage in U.S. Nuclear Industry," Federal Register, Vol. 44, p. 75535, December 20, 1979.

32. Illinois Department of Nuclear Safety, Title 32, Chapter II, Subchapter b, Part 340, "Standards for Protection Against Radiation."

33. ComEd April l983 response to NUREG-0737 Supplement #1 or latest submitted schedule of planned operational dates.

34. "Voluntary Assistance Agreement By and Among Electric Utilities involved in Transportation of Nuclear Materials," dated November 1, 1980.

35. Comprehensive Environmental Response, Compensation and Liability Act of 1980.

36. Accidental Radioactive Contamination of Human Food and Animal Feeds; Recommendation for State and Local Agencies, Volume 47, No. 205, October 22, 1982.

37. American Nuclear Insurers Bulletin #5B (1981), "Accident Notification Procedures for Liability Insureds."

38. "Potassium Iodide as a Thyroid Blocking Agent in a Radiation Emergency: Final Recommendations on Use," Federal Register Vol. 47, No. 125, June 29, 1982.

39. Letter from William J. Dircks, Executive Director for Operations, NRC, to Dr. Donald F. Knuth, President KMC, Inc. dated October 26, 1981.

40. INPO Coordination agreement on emergency information among USCEA, EPRI, INPO, NUMARC and their member utilities, dated April (1988).

41. Babcock and Wilcox Company, Post Accident Sample Offsite Analysis Program (1982).

42. ANI/MAELU Engineering Inspection Criteria For Nuclear Liability Insurance, Section 6.0, Rev. 1, "Emergency Planning."

43. NRC RIS 2006-12, Endorsement of Nuclear Energy Institute Guidance “Enhancement to Emergency Preparedness Programs for Hostile Action.”

44. NRC Bulletin 2005-02, “Emergency Preparedness and Response Actions for Security-Based Events.”

## Appendix 2: Procedure Cross-Reference to NUREG-0654

| Criteria | Planning Standard | Procedure/Document |
|---|---|---|
| NUREG-0654.II.A | Assignment of Responsibility (Organization Control) | EP-AA-120, Emergency Plan Administration |
| | | Letters of Agreement |
| NUREG-0654.II.B | Onsite Emergency Organization | EP-AA-112, Emergency Response Organization (ERO) / Emergency Response Facility (ERF) Activation and Operation |
| | | EP-AA-112-100, Control Room Operations |
| | | EP-AA-112-200, TSC Activation and Operation |
| | | EP-AA-112-300, Operations Support Center Activation and Operation |
| | | EP-AA-112-400, Emergency Operations Facility Activation and Operation |
| | | EP-AA-112-500, Emergency Environmental Monitoring |
| | | EP-AA-112-600, Public Information Organization Activation and Operations |
| NUREG-0654.II.C | Emergency Response Support and Resources | EP-AA-112-400, Emergency Operations Facility Activation and Operations |
| NUREG-0654.II.D | Emergency Classification System | EP-AA-111, Emergency Classification and Protective Action Recommendations |
| NUREG-0654.II.E | Notification Methods and Procedures | EP-AA-114, Notifications |
| | | EP-MA-114-100, Mid-Atlantic State/Local Notifications |
| | | EP-MW-114-100, Midwest Region Offsite Notifications |
| NUREG-0654.II.F | Emergency Communications | EP-AA-114, Notifications |
| | | EP-MA-114-100, Mid-Atlantic State/Local Notifications |
| | | EP-MW-114-100, Midwest Region Offsite Notifications |
| | | EP-AA-124, Inventories and Surveillances |
| | | EP-MA-124-1001, Facility Inventories and Equipment Tests |
| | | EP-MW-124-1001, Facilities Inventories and Equipment Tests |
| NUREG-0654.II.G | Public Education and Information | EP-AA-120, Emergency Plan Administration |
| NUREG-0654.II.H | Emergency Facilities and Equipment | EP-AA-112, Emergency Response Organization (ERO) / Emergency Response Facility (ERF) Activation and Operation |
| | | EP-AA-121, Emergency Response Facilities and Equipment Readiness |
| | | EP-AA-121-1001, Automated Call-Out System Maintenance |
| | | EP-MA-121-1002, Exelon East Alert Notification System (ANS) Program |
| | | EP-MW-121-1002, Siren Unscheduled Activation Response |
| | | EP-MW-121-1003, JIC Fire Alarm System Notification |
| | | EP-MA-121-1004, Exelon East ANS Corrective Maintenance |

| Criteria | Planning Standard | Procedure/Document |
|---|---|---|
| | | EP-MW-121-1004, Siren Change Documentation |
| | | EP-MW-121-1005, Siren Outage Reporting and Monitoring |
| | | EP-MW-121-1006, Contracted Siren Maintenance Oversight |
| | | EP-AA-123, Computer Programs |
| | | EP-AA-124, Inventories and Surveillances |
| | | EP-MA-124-1001, Facility Inventories and Equipment Tests |
| | | EP-MW-124-1001, Facilities Inventories and Equipment Tests |
| | | EP-AA-125-1004, Emergency Response Facilities & Equipment Performance Indicators Guidance |
| NUREG-0654.II.I | Accident Assessment | EP-AA-110, Assessment of Emergencies |
| | | EP-MA-110-100, ERO Computer Applications |
| | | EP-MW-110-100, ERO Computer Applications |
| | | EP-MA-110-200, Dose Assessment |
| | | EP-MW-110-200, Dose Assessment |
| | | EP-AA-110-301, Core Damage Assessment (BWR) |
| | | EP-AA-110-302, Core Damage Assessment (PWR) |
| | | EP-MW-110-1001, Data Point Tables |
| | | EP-AA-123, Computer Programs |
| | | EP-MA-123-1002, Dose Assessment And Protective Action Recommendation (DAPAR) Program Technical Basis For Three Mile Island Generating Station |
| | | EP-MA-123-1004, Dose Assessment And Protective Action Recommendation (DAPAR) Program Technical Basis For Limerick Generating Station |
| | | EP-MA-123-1005, Dose Assessment And Protective Action Recommendation (DAPAR) Program Technical Basis For Peach Bottom Atomic Power Station |
| | | EP-MA-123-1006, Dose Assessment And Protective Action Recommendation (DAPAR) Program Technical Basis For Oyster Creek Station |
| | | EP-MW-123-1002, Dose Assessment And Protective Action Recommendation (DAPAR) Program Technical Basis |
| | | EP-AA-123-1003, Core Damage Assessment Methodology (CDAM) Program Technical Basis |
| NUREG-0654.II.J | Protective Response | EP-AA-113, Personnel Protective Actions |
| | | EP-AA-113-F-04, MA Emergency Director - Site Assembly, Accountability And Evacuation |
| | | EP-AA-113-F-07, MW Emergency Director - Site Assembly, Accountability And Evacuation |
| | | EP-AA-123, Computer Programs |

| Criteria | Planning Standard | Procedure/Document |
|---|---|---|
| | | EP-AA-113-F-03, Thyroid Blocking Agent Authorization. |
| NUREG-0654.II.K | Radiological Exposure Control | EP-AA-110, Assessment of Emergencies |
| | | EP-AA-113, Personnel Protective Actions |
| NUREG-0654.II.L | Medical and Public Health Support | EP-AA-120, Emergency Plan Administration |
| NUREG-0654.II.M | Recovery and Reentry Planning and Post-Accident Operations | EP-AA-115, Termination and Recovery |
| | | EP-AA-120-1002, Storm/Event Restoration |
| NUREG-0654.II.N | Exercises and Drills | EP-AA-122, Drills & Exercises |
| | | EP-AA-122-1001, Drill & Exercise Scheduling, Development And Conduct |
| | | EP-AA-122-1002, Drill & Exercise Evaluation |
| | | EP-AA-122-1002-F-01 [through F-13], Drill & Exercise Demonstration Criteria Section A [through Section M] |
| | | EP-AA-125-1001, EP Performance Indicator Guidance |
| | | EP-AA-125-1002, ERO Performance – Performance Indicators Guidance |
| | | EP-AA-125-1003, ERO Readiness - Performance Indicators Guidance |
| NUREG-0654.II.O | Radiological Emergency Response Training | TQ-AA-113, ERO Training And Qualification |
| NUREG-0654.II.P | Responsibility for the Planning Effort: Development, Periodic Review and Distribution of Emergency Plans | EP-AA-1, Emergency Preparedness |
| | | EP-AA-10, Emergency Preparedness Program Description |
| | | EP-AA-11, Operating Stations Emergency Preparedness Process Description |
| | | EP-AA-1101, EP Fundamentals |
| | | EP-AA-1102, ERO Fundamentals |
| | | EP-AA-120, Emergency Plan Administration |
| | | EP-AA-120-1001, 10CFR50.54(q) Change Evaluation. |
| | | EP-AA-125, Emergency Preparedness Self Evaluation Process |
| | | EP-AA-125-1001, EP Performance Indicator Guidance |
| | | EP-AA-125-1005, Problem Identification & Resolution Performance Indicator Guidance |
| | | Emergency Response Facilities Telephone Directory |

## Appendix 3: List of Corporate Letters of Agreements

| Organization/Agreement Type | Applicable To |
|---|---|
| Department Of Energy (DOE) Radiation Emergency Assistance Center/Training Site, REAC/TS (Letter on File)<br>Medical Consultant | All |
| Environmental, Inc. (P.O.)<br>Radiological Environmental Monitoring | All |
| GE Nuclear Energy, BWRs (Letter on File)<br>BWR Emergency Support | All |
| Global Dosimetry Solutions, Inc. (P.O.)<br>Emergency Dosimetry | MW Region |
| INPO (Letter on File)<br>Emergency Event Support | All |
| Murray & Trettel, Inc. (P.O.)<br>Meteorological Support | All |
| Porter Consultants, Inc. (P.O.)<br>Emergency Medical Assistance Program | MA Region |
| Provena St. Joseph Medical Center (Letter on File)<br>Back-up Emergency Medical Facility | Byron, Dresden, LaSalle, Quad Cities |
| Teledyne Brown Engineering (P.O.)<br>Bioassay Analysis/Radiochemical Analysis | All |
| Westinghouse Elec. Corp., PWRs (Letter on File)<br>PWR Emergency Support | MW Region |
| Commonwealth of Pennsylvania (Letter on File)<br>Coordination of onsite/offsite Response | Limerick, Peach Bottom, Three Mile Island |

## Appendix 4: Glossary of Terms and Acronyms

| | |
|---|---|
| Accident Assessment | Accident assessment consists of a variety of actions taken to determine the nature, effects and severity of an accident and includes evaluation of reactor operator status reports, damage assessment reports, meteorological observations, seismic observations, fire reports, radiological dose projections, in plant radiological monitoring, and environmental monitoring. |
| Activation | (1) "ERO Activation" is the process of initiating actions to notify and mobilize Emergency Response Organization (ERO) personnel following an event classification under the emergency plan.<br><br>(2) "Facility Activation" refers to the decision to consider a facility fully operational based on the minimum staffing required under Table B-1 of the E-Plan and the ability of facility staffing and equipment to perform its designed function(s). |
| Annual | Frequency of occurrence equal to once per calendar year, January 1 to December 31. |
| Assembly/Accountability | A procedural or discretionary protective action taken for all persons within the security "Protected Area," which involves the gathering of personnel into pre-designated areas, and the subsequent verification that the location of these personnel is known. |
| Assessment Actions | Those actions taken during or after an emergency to obtain and process information that is necessary to make decisions to implement specific emergency measures. |
| Biennial | Frequency of occurrence equal to once per two calendar year periods. |
| Biennial Exercise | An event that tests the integrated capability and a major portion of the basic elements existing within an emergency plan. An exercise usually involves participation of personnel from state and local governments, utility personnel, and may involve participation of Federal government personnel. |
| Classification | The classification of emergencies is divided into FIVE (5) categories or conditions, covering the postulated spectrum of emergency situations. The first four (4) emergency classifications are characterized by Emergency Action Levels (EALs) or event initiating conditions and address emergencies of increasing severity. The fifth, the Recovery |

| | |
|---|---|
| | classification, is unique in that it may be viewed as a phase of the emergency, requiring specific criteria to be met and/or considered prior to its declaration. |
| Command and Control | When in Command and Control, the designated Emergency Director (Shift, Station or Corporate) has overall responsibility for Exelon Nuclear's emergency response efforts, including the nondelegable responsibilities of Command and Control. |
| Committed Dose Equivalent (CDE) | The Dose Equivalent to organs or tissues of reference that will be received from an intake of radioactive material by an individual during the 50-year period following the intake. |
| Corrective Action | Those emergency measures taken to lessen or terminate an emergency situation at or near the source of the problem, to prevent an uncontrolled release of radioactive material, or to reduce the magnitude of a release. Corrective actions include, equipment repair or shutdown, installation of emergency structures, fire fighting, repair, and damage control. |
| Damage Assessment | Estimates and descriptions of the nature and extent of damages resulting from an emergency or disaster; of actions that can be taken to prevent or mitigate further damage; and of assistance required in response and recovery efforts based on actual observations by qualified engineers and inspectors. |
| Damage Control | The process of preventing further damage from occurring and preventing the increase in severity of the accident. |
| Decontamination | The reduction or removal of contaminated radioactive material from a structure, area, material, object, or person. Decontamination may be accomplished by (1) treating the surface so as to remove or decrease the contamination; (2) letting the material stand so that the radioactivity is decreased as a result of natural decay; and (3) covering the contamination. |
| Dedicated Communications | A communications link between two or more locations, access to which is limited to designated locations, and used only for the purpose intended. The communications link may be either telephone or radio. |
| Deep Dose Equivalent (DDE) | The dose equivalent at a tissue depth of 1 cm (1000 mg/cm$^2$); applies to external whole body exposure. |
| Dose | A generic term that means absorbed dose, dose equivalent, effective dose equivalent, deep dose equivalent, committed |

| | |
|---|---|
| | dose equivalent, committed effective dose equivalent, or total effective dose equivalent. |
| Dose Equivalent (DE) | The product of the absorbed dose in tissue, quality factor, and all other necessary modifying factors at the location of interest. The unit of dose equivalent is the Rem. |
| Dose Projection | The calculated estimate of a radiation dose to individuals at a given location (normally off-site), determined from the source term/quantity of radioactive material (Q) released, and the appropriate meteorological dispersion parameters (X/Q). |
| Dose Rate | The amount of ionizing (or nuclear) radiation to which an individual would be exposed per unit of time. As it would apply to dose rate to a person, it is usually expressed as rems per hour or in submultiples of this unit, such as millirems per hour. The dose rate is commonly used to indicate the level of radioactivity in a contaminated area. |
| Dosimeter | An instrument such as a thermoluminescent dosimeter (TLD), self-reading pocket dosimeter (SRPD), or electronic dosimeter (ED) for measuring, registering, or evaluating total accumulated dose or exposure to ionizing radiation. |
| Drill | A supervised instruction period aimed at testing, developing and maintaining skills in a particular operation. |
| Early Phase | The period at the beginning of a nuclear incident when immediate decisions for effective use of protective actions are required and must be based primarily on predictions of radiological conditions in the environment. This phase may last from hours to days. For the purposes of dose projections it is assumed to last four days. |
| Emergency Action Levels (EALs) | A pre-determined, site-specific, observable threshold for a plant Initiating Condition that places the plant in a given emergency class. An EAL can be an instrument reading; an equipment status indicator; a measurable parameter (onsite or offsite); a discrete, observable event; or another phenomenon which, if it occurs, indicates entry into a particular emergency class. |
| Emergency Alert System (EAS) | A network of broadcast stations and interconnecting facilities which have been authorized by the Federal Communications Commission to operate in a controlled manner during a war, state of public peril or disaster, or other national or local emergency. In the event of a nuclear reactor accident, instructions/notifications to the public on conditions or protective actions would be broadcast by state or local |

| | |
|---|---|
| | government authorities on the EAS. |
| Emergency Director | Individual in Command and Control. One of the following: the Shift Emergency Director (Control Room), Station Emergency Director (TSC) or the Corporate Emergency Director (EOF). |
| Emergency Notification System (ENS) | The NRC Emergency Notification System hot line is a dedicated telephone system that connects the plant with NRC headquarters in White Flint, Maryland. It is directly used for reporting emergency conditions to NRC personnel. |
| Emergency Operations Facility (EOF) | Designated location from which the Licensee Emergency Response Organization conducts the company's overall emergency response in coordination with Federal, State and designated emergency response organizations. |
| Emergency Operating Procedures (EOPs) | EOPs are step-by-step procedures for direct actions taken by licensed reactor operators to mitigate and/or correct an off normal plant condition through the control of plant systems. |
| Emergency Operations Center (EOC) | A facility designed and equipped for effective coordination and control of emergency operations carried out within an organization's jurisdiction. The site from which civil government officials (municipal, county, state, and Federal) exercise direction and control in a civil defense emergency. |
| Emergency Personnel | Those organizational groups that perform a functional role during an emergency condition. Within Exelon Nuclear, emergency personnel include the Managers and Directors of the Emergency Response Organization, accident assessment personnel, radiological monitoring teams, fire brigades, first aid teams and security personnel. |
| Emergency Planning Zones (EPZ) | That area surrounding a nuclear station in which emergency planning is conducted for the protection of the public. With respect to protecting the public from the plume exposure resulting from an incident, the EPZ is usually an area with a radius of about 10 miles surrounding the facility. With respect to the ingestion exposure pathway, the EPZ is usually an area with a radius of about 50 miles. |
| Emergency Preparedness | A state of readiness that provides reasonable assurance that adequate protective measures can and will be taken upon implementation of the E-Plan in the event of a radiological emergency. |
| Emergency Response Data System (ERDS) | ERDS is a direct near real-time electronic data link between the licensee's onsite computer system and the NRC Operations Center that provides for the automated |

| | |
|---|---|
| | transmission of a limited data set of selected parameters. |
| Environmental Monitoring | The use of radiological instruments or sample collecting devices to measure and assess background radiation levels and/or the extent and magnitude of radiological contamination in the environment around the plant. This may be done in various stages such as pre-operational, operational, emergency, and post operational. |
| Essential Personnel | Essential personnel are those needed to achieve the goals and tasks as deemed necessary by the Station Emergency Director. |
| Evacuation | The urgent removal of people from an area to avoid or reduce high level, short-term exposure usually from the plume or from deposited activity. |
| Exclusion Area | An Exclusion Area is an area specified for the purpose of reactor site evaluation in accordance with 10 CFR 100. It is an area of such size that an individual located at any point on its boundary for two hours immediately following onset of the postulated release would not receive a total radiation dose to the whole body in excess of 25 rem or a total radiation dose of 300 rem to the thyroid from iodine exposure. |
| Exercise | An event that tests the integrated capability of a major portion of the basic elements existing within emergency preparedness plans and organizations. |
| Exercise Cycle | A six-year period of time. |
| Fission Product Barrier | The fuel cladding, reactor coolant system boundary, or the containment boundary. |
| Hazardous Material | A substance or material which has been determined by the United States Secretary of Transportation to be capable of posing an unreasonable risk to health, safety, and property when transported in commerce, and which has been so designated in 49 CFR 172. |
| Health Physics Network (HPN) Line | In the event of a Site Area Emergency, the NRC HPN line will be activated by the NRC Operations center in White Flint, Maryland. This phone is part of a network that includes the NRC Regional Office and the NRC Operations Headquarters in White Flint, Maryland. This system is dedicated to the transmittal of radiological information by plant personnel to NRC Operations Center and the Regional office. HPN phones are located in the TSC and EOF. |

| | |
|---|---|
| High Radiation Sampling System | Post-accident sampling capability to obtain and perform radioisotopic and chemical analyses of reactor coolant and containment atmosphere samples. |
| Imminent | Mitigation actions have been ineffective and trended information indicates that the event or condition will occur within 2 hours. |
| Ingestion Exposure Pathway | The potential pathway of radioactive materials to the public through consumption of radiologically contaminated water and foods such as milk or fresh vegetables. Around a nuclear power plant this is usually described in connection with the 50-mile radius Emergency Planning Zone (50 mile EPZ). |
| Initiating Condition | A predetermined UNIT condition where either the potential exists for a radiological emergency or such an emergency has occurred. |
| Integrated Drill | A drill conducted in the year that a Biennial Exercise is not scheduled including at least two Emergency Response Facilities in order to demonstrate at least two of the functions of management and control of emergency response, accident assessment, protective action decision-making, or plant system repair and corrective action. |
| Intermediate Phase | The period beginning after the source and releases have been brought under control and reliable environmental measurements are available for use as a basis for decisions on additional protective actions. |
| Joint Information Center | A Corporate Emergency Facility activated by Exelon and staffed by Exelon, state, and Federal Public Information personnel. This facility serves as the single point of contact for the media and public to obtain information about an emergency. |
| Late Phase | The period beginning when recovery action designed to reduce radiation levels in the environment to acceptable levels for unrestricted use are commenced and ending when all recovery actions have been completed. This period may extend from months to years (also referred to as the recovery phase). |
| Local Evacuation | The evacuation of personnel from a particular area, such as a room or building. |
| Low Population Zone (LPZ) | As defined in 10 CFR 100.3, the area immediately surrounding the exclusion area which contains residents, the total number and density of which are such that there is a |

| | |
|---|---|
| | reasonable probability that appropriate protective measures could be taken in their behalf in the event of a serious accident. |
| Main Control Room | The operations center of a nuclear power plant from which the plant can be monitored and controlled. |
| Monthly | Frequency of occurrence equal to once per calendar month. |
| Non-Essential Site Personnel | Those personnel not needed for the continuing existence or functioning of the ERO. They are personnel not required to fill certain positions in the ERO. Identification of non-essential personnel is circumstance-oriented as determined by the Station Emergency Director. |
| Notification, Public | Public notification means to communicate instructions on the nature of an incident that prompted the public alerting/warning and on protective or precautionary actions that should be taken by the recipients of the alert. A state and local government process for providing information promptly to the public over radio and TV at the time of activating the alerting (warning) signal (sirens). Initial notifications of the public might include instructions to stay inside, close windows, and doors, and listen to radio and TV for further instructions. Commercial broadcast messages are the primary means for advising the general public of the conditions of any nuclear accident. (See Emergency Alert System.) |
| Off-Site | The area around a nuclear generating station that lies outside the station's "site boundary." |
| Offsite Dose Calculation Manual (ODCM) | The ODCM presents a discussion of the following:<br>1. The ways in which nuclear power stations can affect their environment radiologically;<br>2. The regulations which limit radiological effluents from the nuclear power stations; and<br>3. The methodology used by the nuclear power stations to assess radiological impact on the environment and compliance with regulations. |
| On-Site | The area around a nuclear generating station that lies within the station's "site boundary." |
| Owner Controlled Area | Company owned property on which a Nuclear Station is located and may include Exelon Nuclear leased lands |

| | |
|---|---|
| | adjacent to that Nuclear Station. |
| Operations Support Center (OSC) | An emergency response facility at the Plant to which support personnel report and stand by for deployment in an emergency situation. |
| Personnel Monitoring | The determination of the degree of radioactive contamination on individuals, using standard survey meters, and/or the determination of dosage received by means of dosimetry devices. |
| Plume Exposure Pathway | The potential pathway of radioactive materials to the public through: (a) whole body external exposure from the plume and from deposited materials, and (b) inhalation of radioactive materials. |
| Population-at-Risk | Those persons for whom protective actions are being or would be taken. In the 10-mile EPZ the population-at-risk consists of resident population, transient population, special facility population, and industrial population. |
| Potassium Iodide | (Symbol KI) A chemical compound that readily enters the thyroid gland when ingested. If taken in a sufficient quantity prior to exposure to radioactive iodine, it can prevent the thyroid from absorbing any of the potentially harmful radioactive iodine-131. |
| Potential | Mitigation actions are not effective and trended information indicates that the parameters are outside desirable bands and not stable or improving. |
| Projected Dose | That calculated dose that some individuals in the population group may receive if no protective actions are implemented. Projected doses are calculated to establish an upper limit boundary. |
| Protected Area | That onsite area within the security boundary as defined in each station's Security Plan. |
| Protection Factor (PF) | The relation between the amount of radiation that would be received by a completely unprotected person compared to the amount that would be received by a protected person such as a person in a shielded area. PF = Unshielded dose rate X shielded dose rate. |
| Protective Action | Those emergency measures taken for the purpose of preventing or minimizing radiological exposures to affected population groups. |

| | |
|---|---|
| Protective Action Guide (PAG) | Projected radiological dose values to individuals in the general population that warrant protective action. Protective Action Guides are criteria used to determine if the general population needs protective action regarding projected radiological doses, or from actual committed (measured) dose values. |
| Protective Action Recommendations (PARs) | Recommended actions to the States for the protection of the offsite public from whole body external gamma radiation, and inhalation and ingestion of radioactive materials. The PAR issued is Evacuate. Access control and other recommendations concerning the safeguards of affected food chain processes may be issued by the States as PARs. |
| Public Alerting/Warning | The process of signaling the public, as with sirens, to turn on their TV's or radios and listen for information or instructions broadcast by state or local government authorities on the Emergency Alert System (EAS). |
| Puff Release | A controlled containment vent that will be terminated prior to exceeding 60 minutes in duration **AND** exceeds the limit as defined in the Station Annexes. |
| Quarterly | Frequency of occurrence equal to once in each of the following four periods: January 1 through March 31; April 1 through June 30; July 1 through September 30; October 1 through December 31. |
| Recovery | The process of reducing radiation exposure rates and concentrations of radioactive material in the environment to levels acceptable for unconditional occupancy or use. |
| Release | A '*Release in Progress*' is defined as <u>ANY</u> radioactive release that is a result of, or associated with, the emergency event. |
| Restricted Area | Any area, access to which is controlled by Exelon for purposes of protection of individuals from exposure to radiation and radioactive materials. |
| Restricted Area Boundary | For classification and dose projection purposes, the boundary is a 400-meter (1/4-mile) radius around the plant. The actual boundary is specified in the ODCM. |
| Safety Analysis Report, Updated Final (UFSAR) | The UFSAR is a comprehensive report that a utility is required to submit to the NRC as a prerequisite and as part of the application for an operating license for a nuclear power plant. The multi-volume report contains detailed information on the plant's design and operation, with emphasis on safety- |

| | |
|---|---|
| | related matters. |
| Semi-Annual | Frequency of occurrence equal to once in each of the following periods: January 1 through June 30; July 1 through December 31. |
| Shall, Should, and May | The word "shall" is used to denote a requirement, the word "should" to denote a recommendation and the word "may" to denote permission, neither a requirement nor a recommendation. |
| Shielding | Any material or barrier that attenuates (stops or reduces the intensity of) radiation. |
| Site Boundary | Each Nuclear Station's Site Boundary is described in detail in the ODCM. |
| Site Evacuation | The evacuation of non-essential personnel from the plant site. |
| Source Term | Radioisotope inventory of the reactor core, or amount of radioisotope released to the environment, often as a function of time. |
| Technical Support Center (TSC) | A center outside of the Control Room in which information is supplied on the status of the plant to those individuals who are knowledgeable or responsible for engineering and management support of reactor operations in the event of an emergency, and to those persons who are responsible for management of the on-site emergency response. |
| Threshold Value | Measurable, observable detailed conditions which must be satisfied to determine an EAL applicability. |
| Thyroid Blocking Agent | An agent which when properly administered to an individual will result in sufficient accumulation of stable iodine in the thyroid to prevent significant uptake of radioiodine. Potassium Iodide is such an agent. |
| Total Effective Dose Equivalent (TEDE) | The sum of the deep dose equivalent (for external exposure) and the committed effective dose equivalent (for internal exposure) and 4 days of deposition exposure. |
| Unrestricted Area | Any area to which access is not controlled by the licensee for protecting individuals from exposure to radiation and radioactive materials, and any area used for residential quarters. |
| Vital Areas | Areas within the station security fence which contain vital |

| | |
|---|---|
| | equipment. Examples include Control Rooms, Containment/Reactor Buildings, Turbine Buildings and Electrical Equipment Rooms. |
| Vital Equipment | Any equipment, system, device or material, the failure, destruction, or release of which could directly or indirectly endanger the public health and safety by exposure to radiation. Equipment or systems which would be required to function to protect public health and safety following such failure, destruction, or release are also considered to be vital. |
| Weekly | Frequency occurrence equal to once per calendar week: Monday through Sunday. |

Any abbreviation followed by a lower case 's' denotes the plural form of the term.

ACRONYMS

ac ..... alternating current

ALARA ..... as low as reasonably achievable

ANI ..... American Nuclear Insurers

ANS ..... Alert and Notification System

ANSI ..... American National Standards Institute

ARM ..... Area Radiation Monitor

ASLB ..... Atomic Safety Licensing Board

BNE ..... Bureau of Nuclear Engineering (New Jersey)

BWR ..... boiling water reactor

CB ..... citizen band

cc ..... cubic centimeter

CDE ..... Committed Dose Equivalent

CEOC ..... County Emergency Operation Center

CFR ..... Code of Federal Regulations

CHRMS ..... Containment High Range Monitoring System

CHRRMS ..... Containment High Range Radiation Monitoring System

$cm^2$ ..... square centimeter

CNO ..... Chief Nuclear Officer

cpm ..... count per minute

CR ..... Control Room

CRO ..... Control Room Operator

CRT ..... Cathode Ray Tube

Cs ..... Cesium

dc ..... direct current

DEP ..... Department of Environmental Protection (New Jersey)

DEP ..... Drill and Exercise Performance

DEQ ..... Department of Environmental Quality

DER/BRP ..... Dept of Environmental Resources, Bureau of Radiation Protection (PA)

DFO ..... Disaster Field Office

DGI ..... Digital Graphics Incorporated

DHFS ..... Department of Health and Family Services

DOE ..... U. S. Department of Energy

DOT ..... U. S. Department of Transportation

DPH ..... Department of Public Health

dpm ..... disintegration per minute

DSHS ..... Department of State Health Services (TX)

EAL ..... Emergency Action Level

EAS ..... Emergency Alerting System

EMA ..... Emergency Management Agency

ENC ..... Emergency News Center

ENS ..... Emergency Notification System (NRC)

EOC ..... Emergency Operations (or Operating) Center

EOF ..... Emergency Operations Facility

EOP ..... Emergency Operating Procedure

EPA ..... U. S. Environmental Protection Agency

EPDS ..... Emergency Preparedness Data System

EPZ ..... Emergency Planning Zone

ERF ..... Emergency Response Facility

ESF ..... Engineered Safety Feature

FEMA ..... Federal Emergency Management Agency

FRMAC ..... Federal Radiological Monitoring and Assessment Center

FRMAP..... Federal Radiological Monitoring and Assessment Plan

FRPCC.....Federal Radiological Preparedness Coordinating Committee

FSAR..... Final Safety Analysis Report

GDEM ..... Governor's Division of Emergency Management (TX)

Ge .....Germanium

GET.....General Employee Training

GM ..... Geiger Mueller (radiation detection tube)

HEPA ..... high efficiency particulate air

HPN..... Health Physics Network (NRC)

hr ..... hour

I .....Iodine

IDPH..... Iowa Department of Public Health

IEMA .....Illinois Emergency Management Agency

IEMD ..... Iowa Emergency Management Division

IRAP.....Interagency Radiological Assistance Plan

INPO .....Institute of Nuclear Power Operations

JIC..... Joint Information Center

LGEOC.....Local Government Emergency Operations Center

Li .....Lithium

LOCA .....Loss of Coolant Accident

LPZ.....Low Population Zone

MAELU ..... Mutual Atomic Energy Liability Underwriters

MEMA .....Maryland Emergency Management Agency

MCP .....Municipal Command Post

mR..... milliroentgen

NARS .....Nuclear Accident Reporting System

NCRP ..... National Council on Radiation Protection

NJ-OEM ..... New Jersey-Office of Emergency Management

NOP ..... Nuclear Organization Procedure

NRP ..... National Response Plan

NRC ..... U. S. Nuclear Regulatory Commission

NRR ..... Nuclear Reactor Regulation (NRC)

NWS ..... National Weather Service

NSRAC ..... Nuclear Safety Review and Audit Committee

OEM ..... Office of Emergency Management (NJ State Police)

OSC ..... Operations Support Center

PAG ..... Protective Action Guide

PANS ..... Prompt Alert and Notification System

PAR ..... Protective Action Recommendation

PASS ..... Post Accident Sampling System

PEMA ..... Pennsylvania Emergency Management Agency

QATR ..... Quality Assurance Topical Report

R ..... roentgen

RAA ..... Remote Assembly Area (off-site)

RAC ..... Regional Advisory Committee (FEMA)

RAFT ..... Radiological Assistance Field Team (ILLINOIS)

RAP ..... Radiological Assistance Plan (ILLINOIS)

REAC ..... Radiological Emergency Assessment Center (ILLINOIS)

REP ..... Radiological Emergency Preparedness

RERP ..... Radiological Emergency Response Plan

RMS ..... Radiation Monitoring System

SAMG ..... Severe Accident Management Guidelines

SCBA ..... Self Contained Breathing Apparatus

SEOC ..... State Emergency Operations Center

SFCP ..... State Forward Command Post

SGTS ..... Standby Gas Treatment System

SHL ..... State Hygienic Laboratory (IOWA)

SOC ..... State Operations Center (TX)

SPCC ..... Spill Prevention Control and Countermeasure

SPDS ..... Safety Parameter Display System

Sr ..... Strontium

SRC ..... State Radiological Coordinator

SSC ..... State Staging Center

STA ..... Shift Technical Advisor

TDD ..... Telecommunications Device for the Deaf

TEDE ..... Total Effective Dose Equivalent

TLD ..... Thermoluminescent Dosimeter

TSC ..... Technical Support Center

µCi ..... microcurie

UFSAR ..... Updated Final Safety Analysis Report

WEM ..... Wisconsin Emergency Management