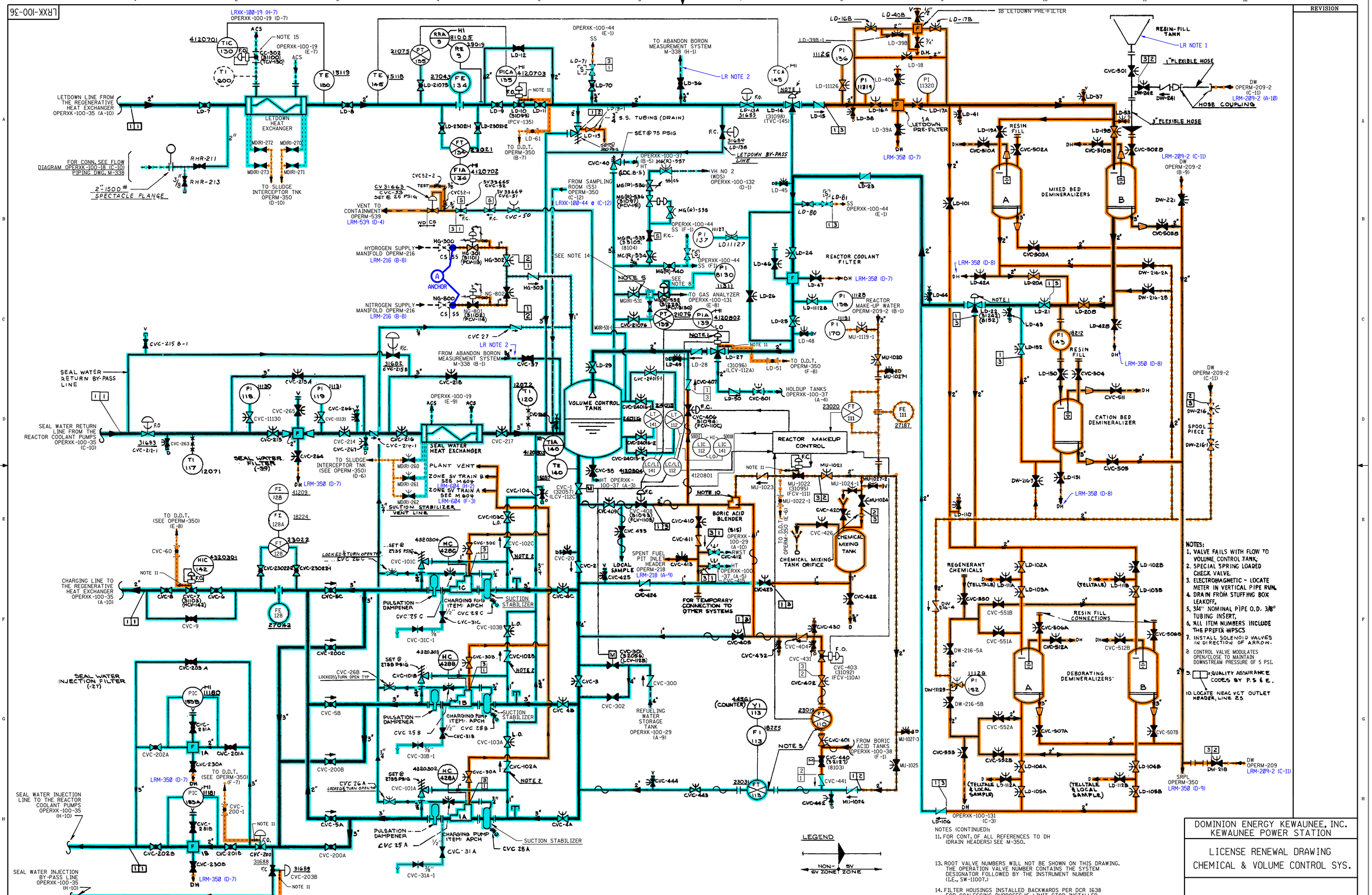

NOTES (CONTINUED):

11. FOR CONT. OF ALL REFERENCES TO DH (DRAIN HEADERS) SEE M-350.

13. ROOT VALVE NUMBERS WILL NOT BE SHOWN ON THIS DRAWING. THE OPERATION VALVE NUMBER CONTAINS THE SYSTEM DESIGNATOR FOLLOWED BY THE INSTRUMENT NUMBER (I.E., SW-1100?).

14. FILTER HOUSINGS INSTALLED BACKWARDS PER DCR 1638 FOR COALESCING PURPOSES.15. LIMIT STOP INSTALLED PER DCR 3482.

15. LIMIT STOP INSTALLED PER DCR 3482.

NOTES:

1. VALVE FAILS WITH FLOW TO VOLUME CONTROL TANK;
2. SPECIAL SPRING LOADED CHECK VALVE.
3. ELECTROMAGNETIC - LOCATE METER IN VERTICAL PIPE RUN.
4. DRAIN FROM STUFFING BOX LEAKOFF.
5. 3/4" NOMINAL PIPE O.D. 3/8" TUBING INSERT.
6. ALL ITEM NUMBERS INCLUDE THE PREFIX WPSCS
7. INSTALL SOLENOID VALVES IN DIRECTION OF ARROW.
8. CONTROL VALVE MODULATES OPEN/CLOSE TO MAINTAIN DOWNSTREAM PRESSURE OF 5 PSI.
9. = QUALITY ASSURANCE CODES BY P.S & E.
10. LOCATE NEAC VCT OUTLET HEADER, LINE 25

LR NOTES:

1. THE RESIN FILL TANK AND THE ASSOCIATED APPURTENANCES ARE A PORTABLE UNIT. WHEN FILLED AND IN USE, THE TANK IS MAINTAINED AT ATMOSPHERIC PRESSURE AND THERE ARE NO SAFETY RELATED COMPONENTS WITHIN THE COLLAPSE ENVELOPE OF THE TANK.
2. DOWN STREAM OF VALVE LD-36 AND UP STREAM OF VALVE CVC-37, THE BORON MEASUREMENT SAMPLE TANK TUBING AND VALVES WILL BE INCLUDED FOR LR PURPOSES SINCE THEY WERE ORIGINALLY QA-1.

LICENSE RENEWAL DRAWING LEGEND

- 35/CVC CHEMICAL & VOLUME CONTROL
- 27A/MUP MAKE-UP AND DEMINERALIZED WATER
- 30/MDS MISCELLANEOUS DRAINS AND SUMPS
- 31/CC COMPONENT COOLING
- 32A/WD-(L) LIQUID WASTE PROCESSING AND DISCHARGE
- 32B/WD-(G) GASEOUS WASTE PROCESSING AND DISCHARGE
- 33/SI SAFETY INJECTION
- 34/RHR RESIDUAL HEAT REMOVAL
- 37/PS PRIMARY SAMPLING
- 51/GS MISCELLANEOUS GAS
- IN SCOPE FOR LR PER 10CFR 54.4 (a)(2)
- IN SCOPE FOR LR PER 10CFR 54.4 (a)(1) 10CFR 54.4 (a)(3)
- ANCHOR LOCATION

DOMINION ENERGY KEWAUNEE, INC.
KEWAUNEE POWER STATION

LICENSE RENEWAL DRAWING
CHEMICAL & VOLUME CONTROL SYS.

HYBRID CADD	APPROVED	DRAWN JSW 03/08/06	DWG. No. LRXK-100-36	REV. 0
	REVIEWED	SCALE		

REFERENCED PER MASTER DRAWING	REV
OPERXK-100-36	BA

REV 'BA' PER LAST UPDATE