LRM-603

REVISION

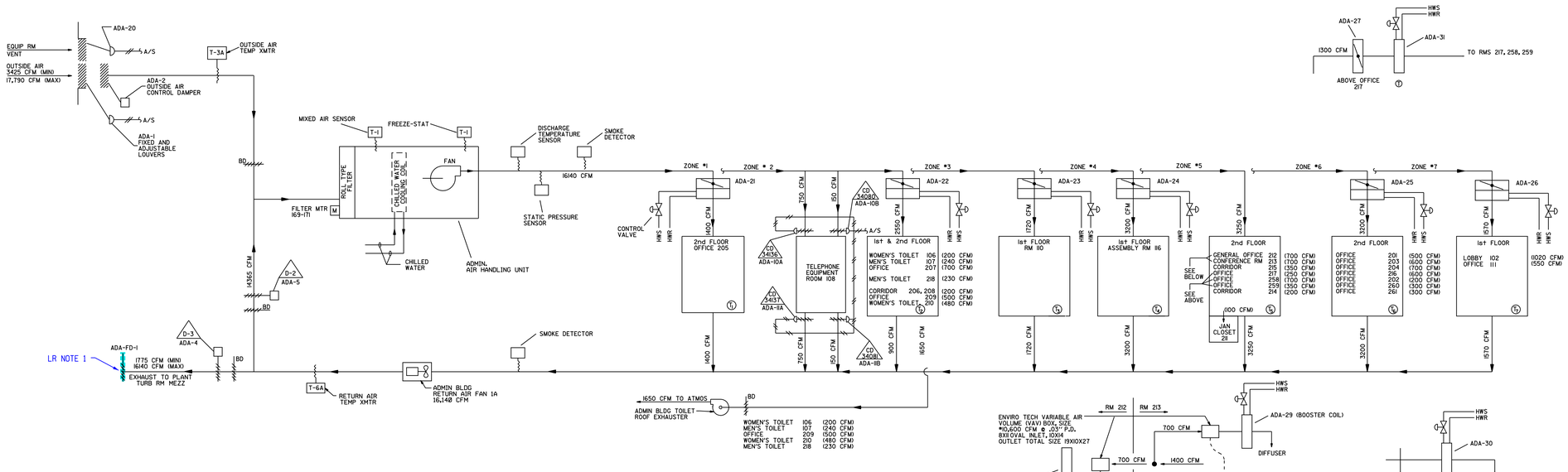


ADMINISTRATION BUILDING

QA-3 SYSTEM

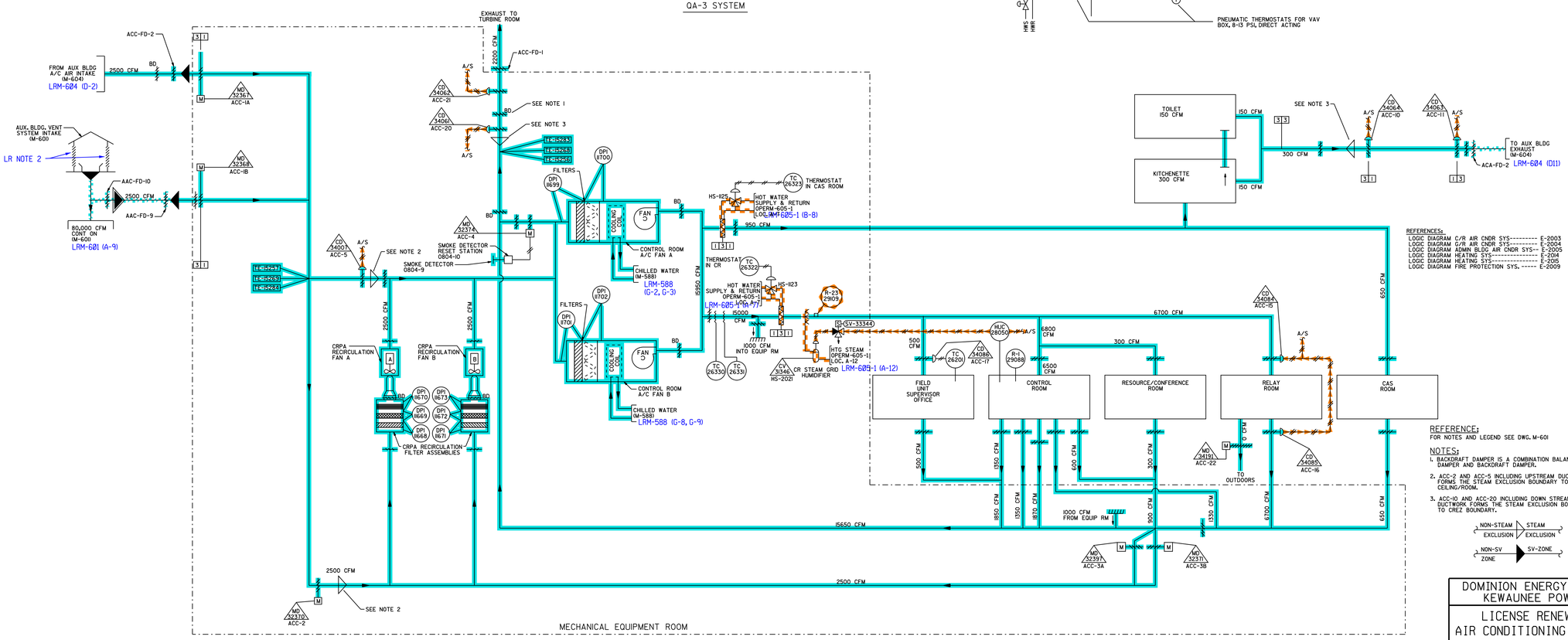


MECHANICAL EQUIPMENT ROOM

CONTROL ROOM

QA-1 SYSTEM EXCEPT WHERE NOTED

REFERENCES:

LOGIC DIAGRAM C/R AIR CNDR SYS--------- E-2003
LOGIC DIAGRAM C/R AIR CNDR SYS--------- E-2004
LOGIC DIAGRAM ADMIN BLDG AIR CNDR SYS-- E-2005
LOGIC DIAGRAM HEATING SYS---------- E-2014
LOGIC DIAGRAM HEATING SYS---------- E-2015
LOGIC DIAGRAM FIRE PROTECTION SYS. ----- E-2009

REFERENCE:

FOR NOTES AND LEGEND SEE DWG. M-601

NOTES:

1. BACKDRAFT DAMPER IS A COMBINATION BALANCE DAMPER AND BACKDRAFT DAMPER.
2. ACC-2 AND ACC-5 INCLUDING UPSTREAM DUCTWORK FORMS THE STEAM EXCLUSION BOUNDARY TO CRAC CEILING/ROOM.
3. ACC-10 AND ACC-20 INCLUDING DOWN STREAM DUCTWORK FORMS THE STEAM EXCLUSION BOUNDARY TO CREZ BOUNDARY.

NON-STEAM EXCLUSION / STEAM EXCLUSION

NON-SV ZONE / SV-ZONE

LR NOTES:

1. THIS FIRE DAMPER IS LOCATED IN THE TURBINE BUILDING EAST WALL. FOR LR PURPOSES, THE DAMPER HAS BEEN ASSIGNED TO THE TURBINE BUILDING AND SCREENHOUSE VENTILATION SYSTEM.
2. THE PENTHOUSE LOUVERS ARE COVERED IN THE EVALUATIONS FOR THE AUXILIARY BUILDING.

LICENSE RENEWAL DRAWING LEGEND

- 25/ACC CONTROL ROOM AIR CONDITIONING
- Ø1/AS STATION AND INSTRUMENT AIR
- 16/TAV TURBINE BUILDING AND SCREENHOUSE VENTILATION
- 17/ACA AUXILIARY BUILDING VENTILATION
- 22/HS HEATING STEAM
- 45/RM RADIATION MONITORING
- IN SCOPE FOR LR PER 10CFR 54.4 (a) (2)
- IN SCOPE FOR LR PER 10CFR 54.4 (a) (1) 10CFR 54.4 (a) (3)

DOMINION ENERGY KEWAUNEE, INC.
KEWAUNEE POWER STATION

LICENSE RENEWAL DRAWING
AIR CONDITIONING ADMINISTRATION BUILDING & CONTROL ROOM

| CADD | APPROVED | DRAWN JSW 02/08/08 | DWG. No. | REV. |
|---|---|---|---|---|
| | REVIEWED | SCALE | LRM-603 | 0 |

REFERENCED PER MASTER DRAWING: OPERM-603 REV BC

REV 'BC' PER LAST UPDATE

jeffrel 22-JA-2008 11:21 LRM-603.LRM