LRM-532

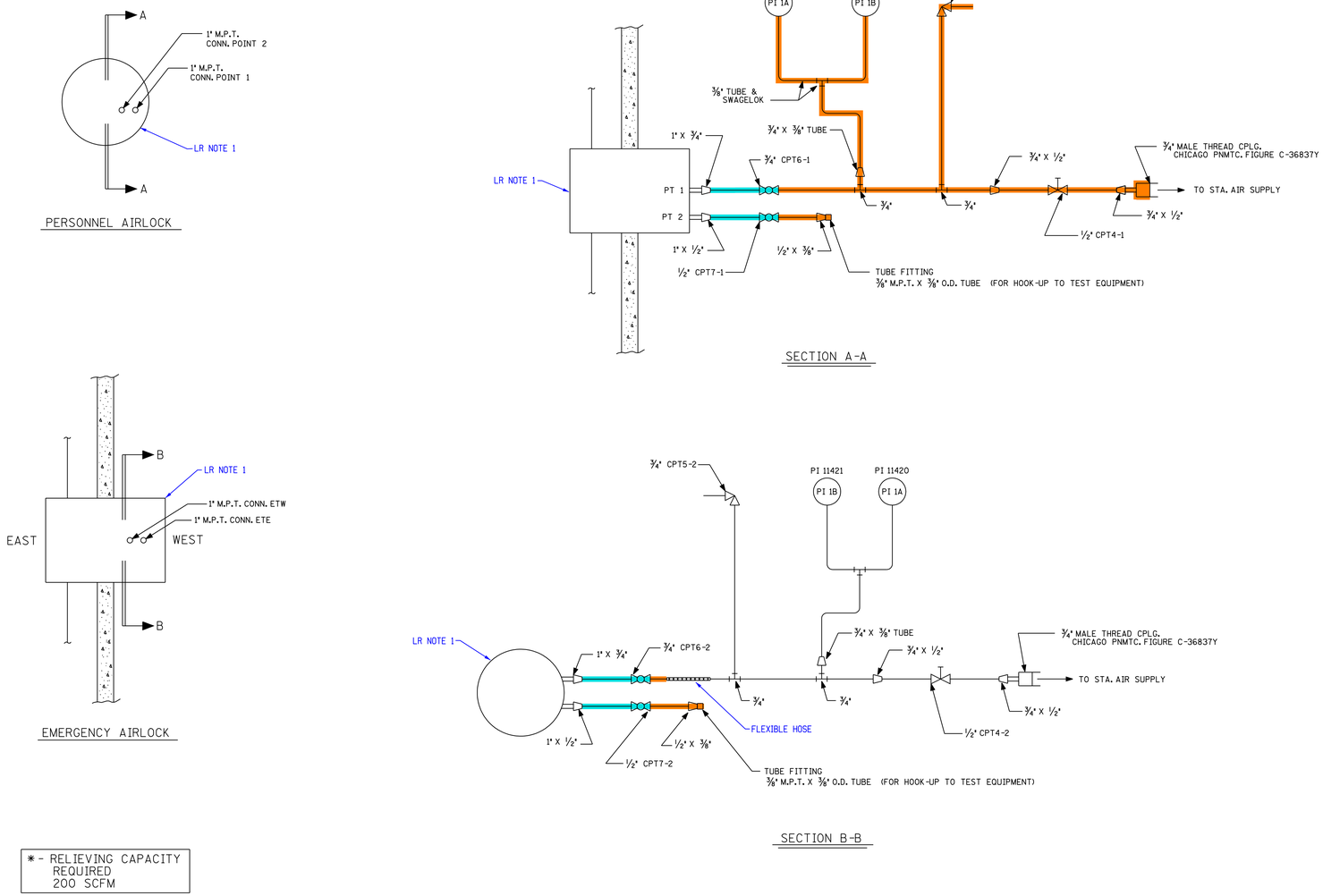

* - RELIEVING CAPACITY REQUIRED 200 SCFM

REVISION

LR NOTES:

1. THE PERSONNEL AIRLOCK, EMERGENCY AIRLOCK AND THE EQUILIZING VALVES ARE IN LR SCOPE AND ARE ADDRESSED IN THE STRUCTURAL EVALUATIONS.

LICENSE RENEWAL DRAWING LEGEND

18/RBV REACTOR BUILDING VENTILATION

IN SCOPE FOR LR PER 10CFR 54.4 (a)(2)

IN SCOPE FOR LR PER 10CFR 54.4 (a)(1) 10CFR 54.4 (a)(3)

DOMINION ENERGY KEWAUNEE, INC.
KEWAUNEE POWER STATION

LICENSE RENEWAL DRAWING
PERSONNEL AND EMERGENCY
AIRLOCK TEST PIPING

CADD	APPROVED	DRAWN JSW 07/14/08	DWG. No. LRM-532	REV. 0
	REVIEWED	SCALE		

REFERENCED PER MASTER DRAWING OPERM-532 REV B

REV 'B' PER LAST UPDATE