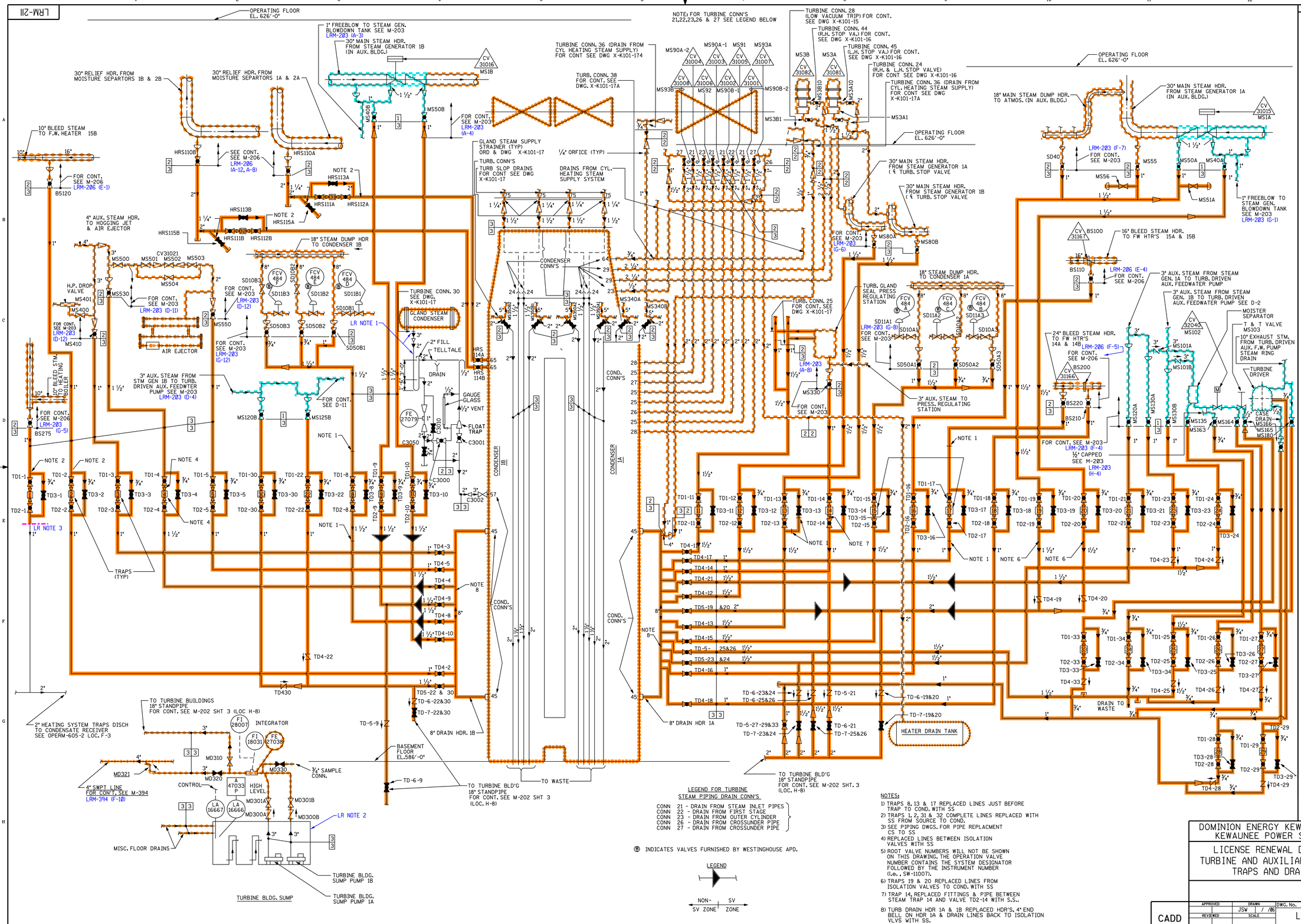

LR NOTES:

1. PIPING COMPONENTS ARE AT ATMOSPHERIC PRESSURE AND SEPARATED FROM SAFETY RELATED COMPONENTS BY MAJOR PLANT EQUIPMENT (CONDENSER). GLAND STEAM CONDENSER IS INCLUDED IN LR SCOPE BECAUSE OF STEAM ENVIRONMENT IN THE SHELL.
2. THESE COMPONENTS HAVE NOT BEEN INCLUDED IN SCOPE FOR SPATIAL CONCERNS BECAUSE THE SUMP IS COVERED.
3. PIPING IS LOCATED IN THE SOUTH END OF THE AUXILIARY BUILDING. THERE ARE NO SAFETY RELATED COMPONENTS IN THIS AREA.

LEGEND FOR TURBINE STEAM PIPING DRAIN CONN'S

CONN 21	DRAIN FROM STEAM INLET PIPES
CONN 22	DRAIN FROM FIRST STAGE
CONN 23	DRAIN FROM OUTER CYLINDER
CONN 26	DRAIN FROM CROSSUNDER PIPE
CONN 27	DRAIN FROM CROSSUNDER PIPE

Ⓦ INDICATES VALVES FURNISHED BY WESTINGHOUSE APD.

NOTES:

1) TRAPS 8, 13 & 17 REPLACED LINES JUST BEFORE TRAP TO COND. WITH SS
2) TRAPS 1, 2, 31 & 32 COMPLETE LINES REPLACED WITH SS FROM SOURCE TO COND.
3) SEE PIPING DWGS. FOR PIPE REPLACMENT CS TO SS
4) REPLACED LINES BETWEEN ISOLATION VALVES WITH SS
5) ROOT VALVE NUMBERS WILL NOT BE SHOWN ON THIS DRAWING. THE OPERATION VALVE NUMBER CONTAINS THE SYSTEM DESIGNATOR FOLLOWED BY THE INSTRUMENT NUMBER (i.e., SW-11007).
6) TRAPS 19 & 20 REPLACED LINES FROM ISOLATION VALVES TO COND. WITH SS
7) TRAP 14, REPLACED FITTINGS & PIPE BETWEEN STEAM TRAP 14 AND VALVE TD2-14 WITH S.S..
8) TURB DRAIN HDR 1A & 1B REPLACED HDR'S, 4" END BELL ON HDR 1A & DRAIN LINES BACK TO ISOLATION VLVS WITH SS.

LICENSE RENEWAL DRAWING LEGEND

- 13/TD TURBINE ROOM TRAPS & DRAINS
- Ø4/CW CIRCULATING WATER
- Ø5B/AFW AUXILIARY FEEDWATER
- Ø6/MS MAIN STEAM AND STEAM DUMP
- Ø9/AR AIR REMOVAL
- 11/HD HEATER AND MOISTURE SEPARATOR DRAINS
- 12/BS BLEED STEAM
- 27B/MUP SERVICE WATER PRETREATMENT
- 30/MDS MISCELLANEOUS DRAINS AND SUMPS
- 54/TB TURBINE

IN SCOPE FOR LR PER 10CFR 54.4 (a) (2)

IN SCOPE FOR LR PER 10CFR 54.4 (a) (1) 10CFR 54.4 (a) (3)

REVISION

DOMINION ENERGY KEWAUNEE, INC.
KEWAUNEE POWER STATION

LICENSE RENEWAL DRAWING
TURBINE AND AUXILIARY BLDG.
TRAPS AND DRAINS

CADD	APPROVED	DRAWN JSW / / 06	DWG. No. LRM-211	REV. 0
	REVIEWED	SCALE		

REFERENCED PER MASTER DRAWING OPERM-211 REV AZ

REV 'AZ' PER LAST UPDATE

jeffral 22-JUL-2008 18:49 LRM-211.LDM